ASG-DesignManager™
User's Printed Graphics

Version: 1.4.3

Publication Number: DSR0200-143-UPG

Publication Date: April 1988

The information contained herein is the confidential and proprietary information of Allen Systems Group, Inc. Unauthorized use of this information and disclosure to third parties is expressly prohibited. This technical publication may not be reproduced in whole or in part, by any means, without the express written consent of Allen Systems Group, Inc.

© 1998-2001 Allen Systems Group, Inc. All rights reserved.
All names and products contained herein are the trademarks or registered trademarks of their respective holders.

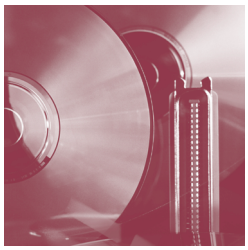

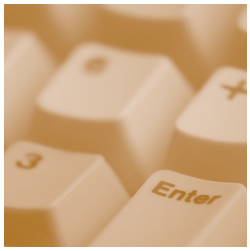

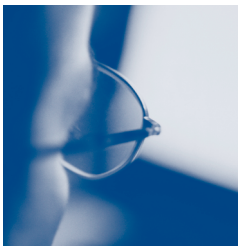

ASG Worldwide Headquarters Naples, Florida USA | asg.com
1333 Third Avenue South, Naples, Florida 34102 USA Tel: 941.435.2200 Fax: 941.263.3692 Toll Free: 1.800.932.5536

ASG Documentation/Product Enhancement Fax Form

Please FAX comments regarding ASG products and/or documentation to (941) 263-3692.

Company Name	Telephone Number	Site ID	Contact name

Product Name/Publication	Version #	Publication Date
Product:		
Publication:		
Tape VOLSER:		

Enhancement Request:

© 2001 Allen Systems Group, Inc.
All names and products are trademarks or registered trademarks of their respective holders.

ASG Support Numbers

ASG provides support throughout the world to resolve questions or problems regarding installation, operation, or use of our products. We provide all levels of support during normal business hours and emergency support during non-business hours. To expedite response time, please follow these procedures.

Please have this information ready:

- Product name, version number, and release number
- List of any fixes currently applied
- Any alphanumeric error codes or messages written precisely or displayed
- A description of the specific steps that immediately preceded the problem
- The severity code (ASG Support uses an escalated severity system to prioritize service to our clients. The severity codes and their meanings are listed below.)

If You Receive a Voice Mail Message:

1. Follow the instructions to report a production-down or critical problem.
2. Leave a detailed message including your name and phone number. A Support representative will be paged and will return your call as soon as possible.
3. Please have the information described above ready for when you are contacted by the Support representative.

Severity Codes and Expected Support Response Times

Severity	Meaning	Expected Support Response Time
1	Production down, critical situation	Within 30 minutes
2	Major component of product disabled	Within 2 hours
3	Problem with the product, but customer has work-around solution	Within 4 hours
4	"How-to" questions and enhancement requests	Within 4 hours

ASG provides software products that run in a number of third-party vendor environments. Support for all non-ASG products is the responsibility of the respective vendor. In the event a vendor discontinues support for a hardware and/or software product, ASG cannot be held responsible for problems arising from the use of that unsupported version.

Business Hours Support

Your Location	Phone	Fax	E-mail
United States and Canada	800.354.3578 1.941.435.2201 **Secondary Numbers:** 800.227.7774 800.525.7775	941.263.2883	support@asg.com
Australia	61.2.9460.0411	61.2.9460.0280	support.au@asg.com
England	44.1727.736305	44.1727.812018	support.uk@asg.com
France	33.141.028590	33.141.028589	support.fr@asg.com
Germany	49.89.45716.300	49.89.45716.400	support.de@asg.com
Singapore	65.224.3080	65.224.8516	support.sg@asg.com
All other countries:	1.941.435.2201		support@asg.com

Non-Business Hours - Emergency Support

Your Location	Phone	Your Location	Phone
United States and Canada	800.354.3578 1.941.435.2201 **Secondary Numbers:** 800.227.7774 800.525.7775 **Fax:** 941.263.2883		
Asia	011.65.224.3080	**Japan/Telecom**	0041.800.9932.5536
Australia	0011.800.9932.5536	**New Zealand**	00.800.9932.5536
Denmark	00.800.9932.5536	**South Korea**	001.800.9932.5536
France	00.800.9932.5536	**Sweden/Telia**	009.800.9932.5536
Germany	00.800.9932.5536	**Switzerland**	00.800.9932.5536
Hong Kong	001.800.9932.5536	**Thailand**	001.800.9932.5536
Ireland	00.800.9932.5536	**United Kingdom**	00.800.9932.5536
Israel/Bezeq	014.800.9932.5536		
Japan/IDC	0061.800.9932.5536	**All other countries**	1.941.435.2201

ASG Web Site

Visit http://www.asg.com, ASG's World Wide Web site.

Submit all product and documentation suggestions to ASG's product management team at http://www.asg.com/products/suggestions.asp

If you do not have access to the web, FAX your suggestions to product management at (941) 263-3692. Please include your name, company, work phone, e-mail ID, and the name of the ASG product you are using. For documentation suggestions include the publication number located on the publication's front cover.

THE MANAGER FAMILY

MANAGER FAMILY – MSP brings you a unique offering – the MANAGER Family of dictionary driven Program Products. MANAGER Products and their dictionaries may be integrated to maximize the return on your software and on your dictionary investment.

USER CONFIGURED – Every MANAGER Product consists of a nucleus with optional additional facilities. You select the options you need, and MSP supplies your chosen configuration.

WORLD-WIDE SUPPORT – All MANAGER Products are backed by comprehensive support, documentation, education and user group activities on a world-wide basis.

managerVIEW™

The Intelligent Workstation based graphical Information Engineering tool driven by the Mainframe resident Corporate Dictionary

CONTROLMANAGER™

The dictionary driven End User Facility for the MANAGER Family

DATAMANAGER™

The Corporate Dictionary driven Information Resource Management system, winner of the ICP $100 Million Award

DESIGNMANAGER™

The dictionary driven Interactive Data and Enterprise Modeling system for logical and physical database design

DICTIONARYMANAGER™

The Corporate Dictionary driven Interchange system supporting the exchange of definitions between multiple vendor dictionaries/directories

METHODMANAGER™

The business driven Information Engineering Environment centered on a Knowledge Based Methodology

PROJECTMANAGER™

The dictionary driven Project Resource Management and Budgetary Control system

SOURCEMANAGER™

The dictionary driven Application Development system

TESTMANAGER™

The Program/Structure Testing and Test Data Generation system

The MSP MANAGER FAMILY – designed for the future; implemented today – making Information Engineering simple.

MSP TRADEMARKS

MSP's trademarks are registered in one or more principal markets throughout the world.

The following are trademarks of Management Systems and Programming Limited:

- MSP
- MANAGER SOFTWARE PRODUCTS
- CONTROLMANAGER
- DATAMANAGER
- DESIGNMANAGER
- DICTIONARYMANAGER
- METHODMANAGER
- PROJECTMANAGER
- SOURCEMANAGER
- TESTMANAGER
- TEXTMANAGER
- InfoBank
- InfoDictionary
- InfoSystem
- InfoView
- CADIE - Computer Aided Data and Information Engineering.
- MIDLINE
- MIDWEEK

The following are trademarks of WHDL – MSP INC:

- managerVIEW.

TRADEMARK ACKNOWLEDGEMENTS

MSP acknowledges that certain proprietary products mentioned within this publication or within other MSP publications are distributed under Trademarks or Registered Trademarks of the vendors who own and/or distribute the products in the country in question.

PREFACE

This manual is one of a series describing DESIGNMANAGER, the interactive and enterprise modeling system for logical and physical database design. DESIGNMANAGER is one of the MANAGER Family of dictionary-driven products developed by MSP for use on IBM System/370, 30xx and 4300 series, and plug compatible, machines. The manual describes the DESIGNMANAGER User Printer Graphics facility (selectable unit DSR-UD31). It is intended for DESIGNMANAGER users who wish to obtain graphic plots of a generated conceptual schema, both in its relational and its network representations. The plots include detailed and overview displays of the relations and the records present in the Workbench Design Area.

MSP provides Maintenance Service for MANAGER Products in IBM OS, DOS, CMS and BS2000 environments, where the release of OS, DOS, CMS or BS2000 in use is defined in Appendix 2 of the appropriate MANAGER Products Installation manual in the table column headed "Compatible Release Level". MSP's Maintenance Service for a particular OS, DOS, CMS or BS2000 environment (Compatible Release Level) will continue for a period equal to or greater than the IBM or Siemens support for that environment. Particular MANAGER Products selectable units interface with certain IBM and/or Siemens software products that run within OS and/or DOS and/or CMS and/or BS2000 environments and/or with other vendor software: the Compatible Release Levels at which these products interface with MANAGER Products and the support provided by MSP are also documented in Appendix 2 of the appropriate MANAGER Products Installation manual. Throughout MSP's technical documentation, the terms OS and DOS respectively cover all those variants of OS and of DOS for which MSP has defined a Compatible Release Level.

The terminals currently supported by MANAGER Products are defined in Appendix 2 of the Installation manuals listed above.

This manual relates to DESIGNMANAGER Version 01, Releases 2.7.1, 3.0 and 3.1.

The text of this manual is reproduced from the User Printer Graphics branch of InfoBank.

Chapter 1 introduces the reader to User Printer Graphics and the PLOT command.

Chapter 2 describes when and how to produce the plots, and how to make use of them once they have been produced.

Chapter 3 describes the Relational Cluster Plot, including its layout and contents. It also describes the Relational Schema Association matrix which summarizes all the associations holding between relations of the schema.

Chapter 4 contains a description of the contents and layout of the Network Cluster Plot. The structure of the Network Schema Association matrices, and the meaning of the entries contained in them, is covered in this chapter.

Chapter 5 discusses the Consolidated Network Plot. This includes its layout and contents, the use of the directories produced with the plot, and the PLOT command options available for simplifying and varying the display.

To assist you to make full use of this manual, the Contents table following this Preface is supported by a combined keyword index and usage index under the heading "Usage Directory" at the back of the manual. The Usage Directory provides a means of accessing information by word occurrence or by function.

A range of manuals is available covering the MANAGER Family of Products. Details of the manuals and other documentation available are published every six months (at the end of June and the end of December) in the MSP Documentation Bulletin, which is distributed to all Users.

CONTENTS

PREFACE			v
LIST OF FIGURES			ix
NOTATION FOR STATEMENT FORMATS			xi
CHAPTER 1	INTRODUCTION	UPG0000	1-1
CHAPTER 2	PRODUCING THE PLOTS	UPG1000	2-1
2.1	When the Plots Can be Produced	UPG1100	2-1
2.2	How to Produce the Plots	UPG1200	2-1
2.3	Using the Plots	UPG1300	2-2
2.4	The PLOT Command Syntax	UPG1300	2-3
CHAPTER 3	THE RELATIONAL CLUSTER PLOT	UPG2000	3-1
3.1	Overview	UPG2100	3-1
3.2	The Content of a Relational Cluster	UPG2200	3-1
3.2.1	The Layout of a Cluster	UPG2210	3-1
3.2.2	Examples of Clusters	UPG2220	3-2
3.2.3	Information Given in a Cluster	UPG2230	3-4
3.3	The Relational Schema Association Matrix	UPG2300	3-4
CHAPTER 4	THE NETWORK CLUSTER PLOT	UPG3000	4-1
4.1	Overview	UPG3100	4-1
4.2	The Content of a Network Cluster	UPG3200	4-1
4.2.1	The Layout of a Cluster	UPG3210	4-1
4.2.2	Examples of Clusters	UPG3220	4-3
4.2.3	Information Given in a Cluster	UPG3230	4-4
4.3	The Network Schema Association Matrices	UPG3300	4-6
4.3.1	The Structure and Purpose of the Matrices	UPG3310	4-6
4.3.2	The Meaning of the Entries in the Matrices	UPG3320	4-6
4.3.3	An Illustrative Example	UPG3330	4-7
CHAPTER 5	THE CONSOLIDATED NETWORK PLOT	UPG4000	5-1
5.1	Overview	UPG4100	5-1
5.2	Details of the Consolidated Network Plot	UPG4200	5-2
5.2.1	Layout of the Consolidated Network Plot	UPG4210	5-2
5.2.2	Use of Pointers in the Consolidated Network Plot	UPG4220	5-4
5.2.3	Additional Plots in the Consolidated Network Plot	UPG4230	5-5
5.2.4	The Use of Directories with the Consolidated Network Plot	UPG4240	5-6
5.3	Command Options for the Consolidated Network Plot	UPG4300	5-7
5.3.1	Overview of the Command Options	UPG4310	5-7
5.3.2	Using the ALL Option in the Plot Command	UPG4320	5-7

5.3.3	Using the LABEL Clause in the PLOT Command	UPG4330	5-7
5.3.4	Using the SEED Clause in the PLOT Command	UPG4340	5-8
5.3.5	Using the VIA Clause in the PLOT Command	UPG4350	5-9
5.3.6	Entering a Title for the Consolidated Network Plot	UPG4360	5-10
5.4	Root Records in the Consolidated Network Plot	UPG4400	5-10

USAGE DIRECTORY UD-1

AMENDMENT RECORD AR-1

LIST OF FIGURES

(Figures are numbered within Chapters.)

Figure 3.1	Relational Cluster for a subject relation and its NP associated relations displaying direct foreign key associations	3-2
Figure 3.2	Relational cluster for a subject relation and its associated relations, displaying domains and direct hierarchical associations	3-3
Figure 3.3	Relational cluster plot for a subject relation and its associated relations, displaying direct hierarchical and bidirectional foreign key associations	3-3
Figure 3.4	Relational schema association matrix for the relations and associations displayed in Figure 3.3	3-5
Figure 4.1	Network cluster for a subject record and its associated P records displaying direct foreign key, direct hierarchical, multivalued and secondary key associations	4-3
Figure 4.2	Network cluster for a subject record and its associated P records displaying domain, hierarchical, secondary key, and bidirectional multivalued associations.	4-4
Figure 4.3	Hierarchical association matrix for the records and associations displayed in Figure 4.1	4-8
Figure 4.4	Non-hierarchical association matrix for the records and associations displayed in Figure 4.1	4-8
Figure 4.5	Composite association matrix for the records and associations displayed in Figure 4.1	4-9
Figure 5.1	Example of a Consolidated Network Plot	5-3
Figure 5.2	Sample plot showing use of pointers	5-4
Figure 5.3	Numeric Directory produced in association with the Consolidated Network Plot of Figure 5.2	5-6
Figure 5.4	Text formed from record keys, where the LABEL clause specifies KEYS and TEXT	5-8
Figure 5.5	Summary of link codes, link types and their default settings, and the associations which the links represent	5-9

NOTATION FOR STATEMENT FORMATS

In all MANAGER Products manuals, the following notation is used in the specification of statement formats (for commands and member definition statements):

- all words printed in capitals are statement identifiers or keywords that must be present in full or truncated form in the circumstances stated in the statement specification. The extent beyond which a word must not be truncated (because it would become ambiguous) is indicated by underlining of the characters that must be retained. (But note that truncation limits shown are to avoid ambiguity within the Product concerned and between that Product and CONTROLMANAGER; they could be affected by the presence of other MANAGER Products, and particularly by the presence of User Defined Commands or User Defined Syntax.)

- all words printed in lower case are variables for which the user must substitute a value consistent with the specification

- material enclosed in square brackets [ ] is an option which may be included or omitted as required

- braces { } indicate that a choice must be made of one of the options enclosed within them

- three periods or full stops ... indicates that the material they immediately follow may be repeated. Where ... immediately follows a closing square bracket or brace, the material that can be repeated is bounded by that square bracket or brace and the corresponding opening square bracket or brace. If material can be repeated only a limited number of times the repetition permitted is stated in the specification.

- other punctuation marks and symbols must be coded as shown, subject to the implications of any square brackets or braces enclosing them; except that where a single quote, ', is shown, a double quote, '', can alternatively be used, provided that the opening and closing quotes of any pair of quotes are the same character (single quote or double quote). Quote characters are used in syntax as delimiters, marking the beginning and end of a string of characters. Your Systems Administrator may have specified an additional character that may be used as an alternative delimiter character. You can find out if this has been done by entering the command:

```
QUERY STRING-DELIMITER
```

CHAPTER 1 INTRODUCTION

This manual describes the DESIGNMANAGER optional additional facility, User Printer Graphics (selectable unit DSR-UD31). If you have this facility installed, you can use the PLOT command to produce graphical displays (plots) of a generated conceptual schema, both in its relational and in its network representation. The topics discussed in this manual include:

- overview of the plots produced by the PLOT command
- the Relational Cluster Plot
- the Network Cluster Plot
- the Consolidated Network Plot.

CHAPTER 2 PRODUCING THE PLOTS

2.1 When the Plots can be Produced

The **PLOT** command produces the various plots provided by the User Printer Graphics optional facility. They can be used to display a generated conceptual schema both in its relational and in its network representations.

The relations and records of the schema must be present in the Workbench Design Area (WBDA) when you issue the PLOT command or else the command is rejected. Thus, the PLOT command must be preceded by a valid DESIGN command without an intervening FLUSH command. Otherwise, the PLOT command is rejected with an appropriate message.

2.2 How to Produce the Plots

Three plots are available using the PLOT command:

- the Relational Cluster Plot
- the Network Cluster Plot
- the Consolidated Network Plot.

The cluster plots can be displayed in either summary or detail format, depending on whether SUMMARY or DETAILS is specified in the PLOT command. The layout of the output is the same in each case, but more information is given about each relation or record if DETAILS is specified. Furthermore, if you have the optional User Formatted Output facility (selectable unit DSR-UD30) installed, you can specify your own format for the layout and content of the cluster plots.

The Consolidated Network Plot is not user formattable in the same sense as the cluster plots. However, there are a number of PLOT command options available which give you a large measure of control over the content of the Consolidated Network Plot and the form in which it is displayed.

To produce the **Relational Cluster Plot** in summary format, for example, you would enter:

```
PLOT RELATIONAL-SCHEMA [CLUSTER] SUMMARY;
```

where the keyword CLUSTER is optional. You would get the same plot by entering:

```
PLOT LOGICAL-SCHEMA [CLUSTER] SUMMARY;
```

To display the **Network Cluster Plot** in detail format, you would enter:

```
PLOT NETWORK-SCHEMA [CLUSTER] DETAILS;
```

A description of the syntax conventions used in this manual is given on page x.

If neither SUMMARY nor DETAILS is specified for either of the cluster plots, the default is to SUMMARY. If you have the User Formatted Output facility installed, you can specify, instead of SUMMARY or DETAILS, the name of a compatible FORMAT member of the Modeling Dictionary. That is, the member must have an **output category** of either LOGICAL-SCHEMA CLUSTER or NETWORK CLUSTER. The User Formatted Output facility and the FORMAT member type are described in the User Formatted Output manual.

If you enter:

```
PLOT NETWORK-SCHEMA CONSOLIDATED;
```

you will produce a **Consolidated Network Plot,** an overview plot of the network schema. There is no formal format-selection (SUMMARY, DETAILS, or format-name) as in the case of the cluster plots.

However, there are four optional keywords and clauses, which provide a good deal of flexibility in this regard:

- the ALL keyword
- the LABEL clause
- the SEED clause
- the VIA clause.

Furthermore, if you have the User Formatted Output facility installed, you can specify a meaningful title for the Consolidated Network Plot by entering it as a string in the CONTROLMANAGER command SET FORMAT-TITLE. The string will be displayed in a box at the beginning of the plot.

For details of these options see section 5.3.

2.3 Using the Plots

The plots produced by the PLOT command can be used (in conjunction with certain of the DESIGNMANAGER reports) in a number of ways. They provide both detailed and overview analyses of the conceptual schema, including in-depth display of all the relations and records generated and the associations that connect them.

Thus, you can evaluate the conceptual schema and compare it with your input data-views for completeness and accuracy. Then you can go back to the Modeling Dictionary to modify and augment your data-views as required.

Furthermore, depending upon the type of database management system (DBMS) you have (relational, hierarchical, network, inverted file), you can, by studying the appropriate conceptual schema reports and plots, plan how to convert or adapt the schema to your particular database and DBMS needs.

In addition, since the records of the network representation of a conceptual schema are closely related to the entities of an enterprise model, you will find that the network schema displays can help you to identify the entities associated with your enterprise. You can do this whether or not you have the optional facility, Enterprise Modeling (selectable unit DSR-EM10), installed. However, without the Enterprise Modeling facility, you won't be able to define ENTITY members in the Modeling Dictionary.

If you do have the facility installed, the network schema display will also help you to modify or augment an enterprise model that already exists in the Modeling Dictionary.

The Enterprise Modeling facility is described in the Enterprise Modeling manual.

2.4 The PLOT Command Syntax

The syntax of the PLOT command is shown below:

```
PLOT {{RELATIONAL-SCHEMA} [CLUSTER] [format-selection]  }{;}
     {{LOGICAL-SCHEMA   }                               }{.}
     {NETWORK-SCHEMA {[CLUSTER] [format-selection]      }
                     {CONSOLIDATED                      }
                     {  [ALL] [LABEL [WITH] {NAMES}]    }
                     {                      {KEYS }     }
                     {  [SEED {NUMBER record-number}]   }
                     {        {NAME record-name    }    }
                     {  [VIA {LINKS link-code-list}]    }
                     {       {ALL LINKS            }    }
```

where

format-selection is:

```
{DETAILS}
{SUMMARY}
```

record-number is the number of a record in the Workbench Design Area

record-name is a name which has been assigned to a record in the Workbench Design Area, using the NAME command

link-code-list is a list of link codes (from the list given in the table of Figure 5.5) which identify the link types to be displayed in the Consolidated Network Plot. If more than one is listed they must be separated by commas, and all must be different.

If the DESIGNMANAGER optional User Formatted Output facility (selectable unit DSR-UD30) is installed, the **format-selection** option is extended as follows:

```
{DETAILS                   }
{SUMMARY                   }
{USING FORMAT format-name  }
```

where **format-name** is the name of a FORMAT member of the Modeling Dictionary.

CHAPTER 3 THE RELATIONAL CLUSTER PLOT

3.1 Overview

After you have used the DESIGN command to generate a conceptual schema, you can issue the PLOT command to produce a **Relational Cluster Plot,** a detailed graphical display of the schema in its relational form. For each relation in the schema, the Relational Cluster Plot provides a diagram, in cluster form, of its associations with the other relations in the schema, including:

- direct foreign key associations
- direct hierarchical associations
- domain associations.

All relations in the Workbench Design Area are displayed, including the following types:

- FD-relations
- MVD-relations
- role relations.

In addition, the Relational Cluster Plot provides you with the **relational schema association matrix,** which summarizes all the associations that hold amongst the relations of the generated schema.

See the DESIGNMANAGER User's Guide for definitions and details of the types of relations and associations that can hold in a relational schema.

3.2 The Content of a Relational Cluster

3.2.1 The Layout of a Cluster

In the Relational Cluster Plot, an individual cluster is plotted for each relation in the Workbench Design Area (WBDA). The relation for which the cluster is plotted in each case is called the **subject relation.** In the discussion that follows, the subject relation is designated as **R1.** The other relations in the cluster are termed **associated relations,** indicated by R2, R3 and so forth.

In the plot, a subject relation is depicted by a larger box and the associated relations by smaller boxes. Associations between relations are represented by connecting arrows. The type of association existing between the subject relation and each of its associated relations is indicated in the cluster by the type of arrow used to connect them, as follows:

- a single-headed, single-shafted arrow indicates that a **direct foreign key association** exists between the subject relation R1 and the associated relation R2. The association can hold either in one direction only or in both directions; that is,
  R1 -----> R2, R1 <----- R2 or R1 <----> R2
- a single-headed, double-shafted arrow indicates a **domain association** between R1 and R2, that is, R1 =====> R2 or R1 <===== R2. Also indicated is the existence of a domain dependency that holds between the key of R1 and the key of R2.

- a single-shafted bidirectional arrow, single-headed in one direction and double-headed in the other, indicates a **direct hierarchical association,** that is, R1 <---->> R2 or R1 <<---> R2.

In a cluster, the relations are arranged vertically. Each associated relation appears above or below the subject relation in accordance with the convention that single-headed arrows point upward and double-headed arrows point downward. The only exception to this convention occurs when a direct foreign key association holds in both directions between the subject relation and one of its associated relations, in which case the associated relation appears below the subject relation.

3.2.2 Examples of Clusters

In the examples that follow, R1 is the subject relation; R2 and R3 are the associated relations.

Given the relations:

R1(**A** ,B), R2(**B** ,C), R3(**D** ,A), with respective keys A, B, D, direct foreign key associations exist from R3 to R1 and from R1 to R2. They would appear in the cluster for R1 as shown in the next diagram:

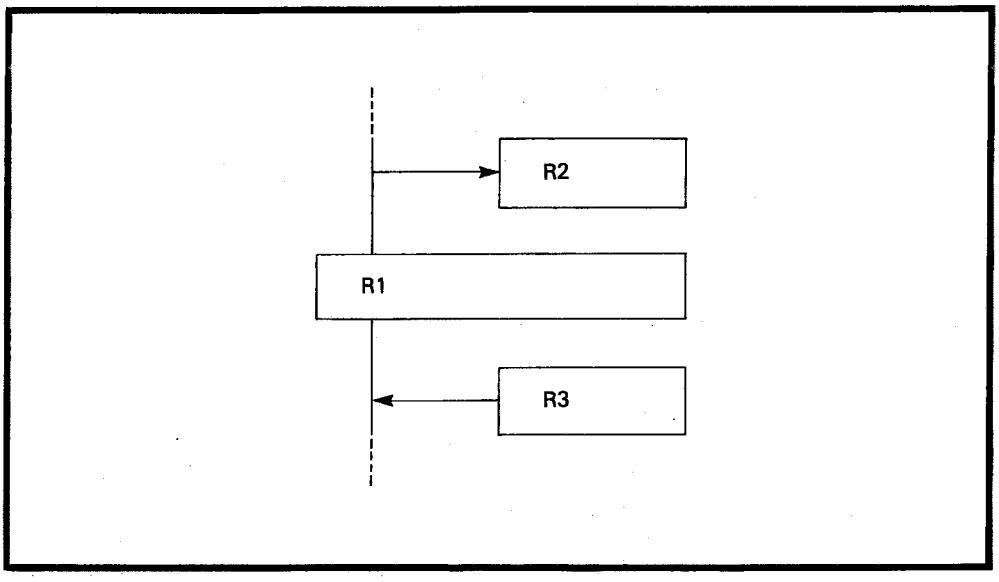

Figure 3.1 Relational Cluster for a subject relation and its NP associated relations displaying direct foreign key associations

Given the relations:

R1(**A** ,B) with key A
R2(**A,C** ,D) with key A+C
R3(**E** ,A), a role relation with key E, indicating a domain dependency from E to A,

they would appear in the cluster for R1 as shown in the following diagram.

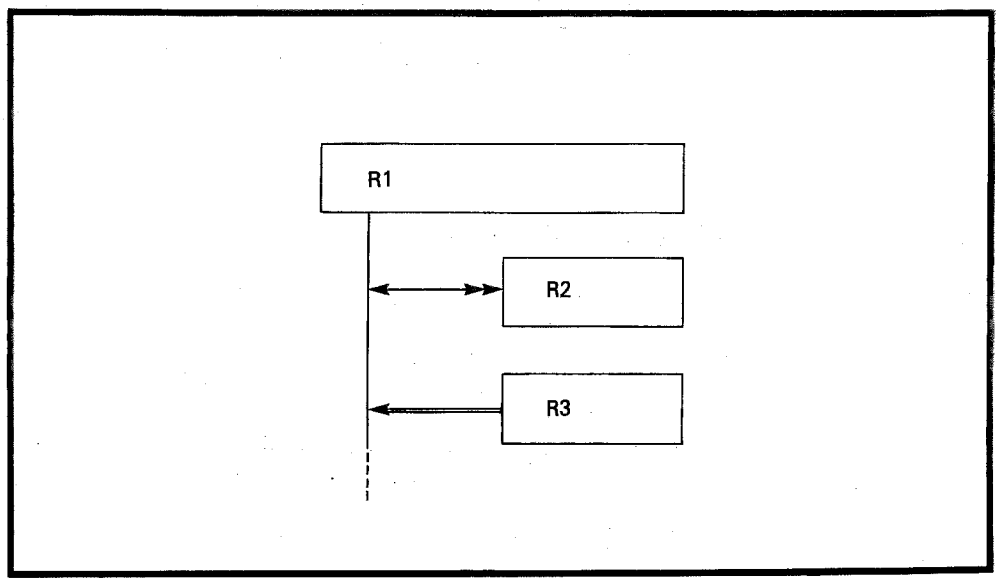

Figure 3.2 Relational cluster for a subject relation and its associated relations, displaying domains and direct hierarchical associations

Note that a direct hierarchical association exists between R1 and R2 such that the key of R1 is contained in the key of R2, and a domain association exists from R3 to R1.

Given the relations:

R1(**A,B** ,C) with key A+B
R2(**A** ,D) with key A
R3(**B,C** ,A) with key B+C,

they would appear in the cluster for R1 as shown in the following diagram.

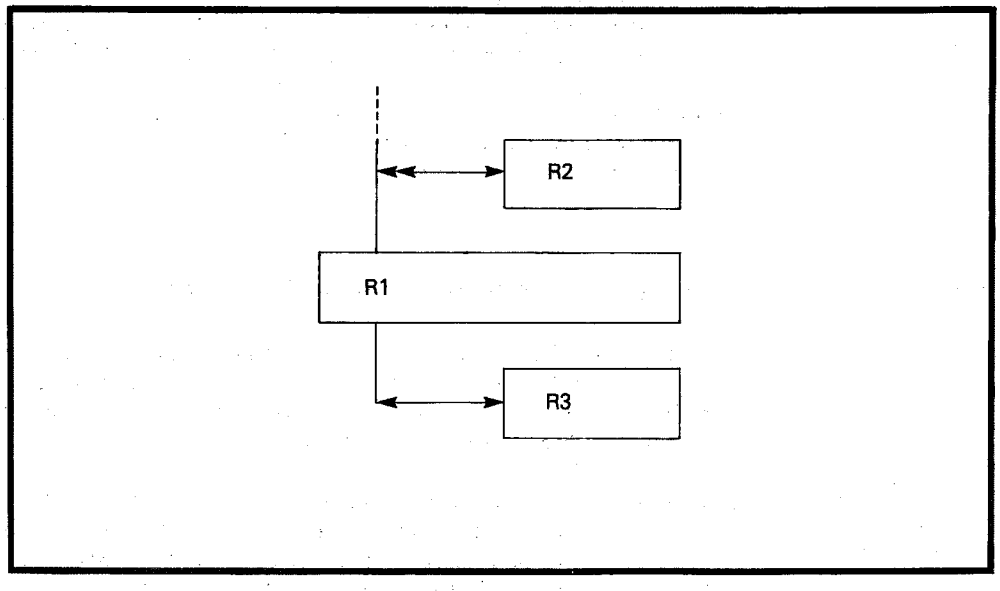

Figure 3.3 Relational cluster plot for a subject relation and its associated relations, displaying direct hierarchical and bidirectional foreign key associations

In this diagram, a direct hierarchical association exists between R1 and R2 such that the key of R2 is contained in the key of R1, and direct foreign key associations exist in both directions between R1 and R3.

Note that, although a foreign key association also exists from R3 to R2, it is not a direct association (relation R1 intervenes) and thus is not depicted in the plot.

3.2.3 Information Given in a Cluster

As indicated in section 3.1, you can specify in the PLOT command whether you want the Relational Cluster Plot displayed in summary or detail format. The layout of the plot is the same in either case; in the detail plot, the content of each relation is reported in greater detail. If the optional User Formatted Output facility (selectable unit DSR-UD30) is installed, you can instead enter the name of an appropriate FORMAT member of the Modeling Dictionary containing alternative specifications for the layout and content of the plot.

The information given for the subject relation of a cluster in a summary plot is:

- the relation number (the number allocated to the relation when it was generated in the WBDA)
- the relation name (if any has been assigned).

A description of the naming and numbering of relations (and records) in the WBDA is given in the DESIGNMANAGER User's Guide.

In a detail plot, you get the same information for the subject relation as in the summary plot and, in addition:

- the name(s) of the data element(s) comprising the key of the relation
- the name of each non-prime data element in the relation, that is, each data element which does not form any part of the key.

The information given for each associated relation of a cluster in a summary plot is:

- the relation number
- the relation name (if any)
- the association, represented by a directed arrow, that holds between the subject relation and the associated relation (see the examples above).

In a detail plot, you get the same information for each associated relation of a cluster as in a summary plot, and, in addition, the name of each data element forming the key of the relation.

3.3 The Relational Schema Association Matrix

In a Relational Cluster Plot, after the clusters for all the relations in the Workbench Design Area (WBDA) have been displayed, the **relational schema association matrix** is output. This matrix is a table of entries summarizing all the associations shown in the clusters between the displayed relations.

Each row of the matrix corresponds to a relation, as does each column, and is headed by the appropriate relation number. Thus, the matrix is an n-by-n square array, where n is the total number of relations in the WBDA. Row 1 and column 1 correspond to relation 1, row 2 and column 2 to relation 2, and so on.

An association is always depicted in a matrix entry as holding **from** the row relation **to** the column relation. Thus, by reading across a row, you can identify the associations that hold from a particular relation to the other relations. If no association exists from a given relation to another, then the corresponding matrix entry is left blank. The following characters indicate the existence of an association:

- the numeral **1** indicates either that a **direct foreign key association** exists from the row relation to the column relation, or that a **direct hierarchical association** exists for which the key of the row relation contains the key of the column relation
- the letter **M** indicates that a **direct hierarchical association** exists for which the key of the column relation contains the key of the row relation. (In this case, a **1** will appear as the **dual** matrix entry. For example, if the entry in row 3 and column 5 is M, then the entry in row 5 and column 3 will be 1.)
- the letter **D** indicates that a **domain association** exists from the row relation to the column relation. This means that a **domain dependency** holds from the key of the row relation to the key of the column relation.

Thus, the association matrix can be used as a quick reference, not only to determine the existence of an association between relations, but also to identify the type of association.

To illustrate with a simple case, consider the final example in section 3.2.2. Given the relations:

R1(**A,B** ,C) with key A+B
R2(**A** ,D) with key A
R3(**B,C** ,A) with key B+C,

a direct hierarchical association exists between R1 and R2 with the key of R2 contained in the key of R1, and direct foreign key associations exist both from R1 to R3 and from R3 to R1. The cluster diagram for relation R1 is given in section 3.2.2.

The association matrix would take the following form:

	1	2	3
1		1	1
2	M		
3	1		

Figure 3.4 Relational schema association matrix for the relations and associations displayed in Figure 3.3

CHAPTER 4 THE NETWORK CLUSTER PLOT

4.1 Overview

After you have used the DESIGN command to generate a conceptual schema, you can issue the PLOT command to produce a **Network Cluster Plot,** a detailed graphical display of the schema in its network form. For each record in the schema, the Network Cluster Plot provides a diagram, in cluster form, of its associations with the other records in the schema, including:

- direct foreign key associations
- direct hierarchical associations
- domain associations
- multivalued associations
- secondary key associations.

The last two types are used in a network schema to represent multivalued dependencies (MVDs) between data elements from different records. (This is in contrast to a relational schema, where each MVD is represented by a single relation in which all the data elements of the MVD appear. This can be an all-key MVD-relation, an FD-relation, or a role relation.)

All records in the Workbench Design Area are displayed in the Network Cluster Plot, including the following types:

- FD-records
- role records
- assumed records.

Following each cluster, details are given of any secondary key associations displayed in the cluster. Following all the clusters, three **relational association matrices** are output: a hierarchical association matrix, a non-hierarchical association matrix, plus a composite of both. These summarize all the associations (except secondary key associations) that hold amongst the records of the generated schema.

See the DESIGNMANAGER User's Guide for definitions and details of the types of records and associations that can hold in a network schema.

4.2 The Content of a Network Cluster

4.2.1 The Layout of a Cluster

In the Network Cluster Plot, an individual cluster is plotted for each record in the Workbench Design Area (WBDA). The record for which the cluster is plotted in each case is called the **subject record.** In the examples below, the subject record is designated as R1. The other records in the cluster are termed **associated records,** indicated by R2, R3, and so on.

In the plot, a subject record is depicted by a larger box and the associated records by smaller boxes. Associations between records are represented by connecting arrows. The type of association existing between the subject record and each of its associated records is indicated in the cluster by the type of arrow used to connect them and by the position of the associated record relative to the subject record, as described in the following paragraphs.

For associated records connected to the **left end** of the subject record:

- a single-headed, single-shafted arrow indicates the existence of a **direct foreign key association** between the subject record R1 and the associated record R2. The association can hold in either direction or in both; that is, R1 -----> R2, R1 <----- R2, or R1 <----> R2.
- a double-headed, single-shafted arrow indicates a **multivalued association,** which can hold in either direction or in both; that is, R1 ---->> R2, R1 <<---- R2 or R1 <<-->> R2.
- a single-headed, double-shafted arrow indicates a **domain association.** The association can hold in one direction or the other, but not in both directions; that is, R1 =====> R2 or R1 <===== R2. Also indicated is the existence of a domain dependency that holds between the key of R1 and the key of R2.
- a bidirectional arrow can also be single-headed at one end and double-headed at the other. This indicates a direct foreign key association in one direction and a multivalued association in the reverse direction; that is, R1 <--->> R2 or R1 <<---> R2.

A **direct hierarchical association** exists between the subject record R1 and an associated record R2 that is connected to the **top** or **bottom** of the subject record. It is depicted by a single-shafted bidirectional arrow which is single-headed in one direction and double-headed in the other; that is:

R1 <--->> R2 or R1 <<---> R2.

A **secondary key association** exists between the subject record R1 and an associated record R2 that is connected to the **right end** of the subject record. It is depicted by a double-headed arrow which must be unidirectional. It can hold in one direction or the other, but not in both, that is,

R1 ---->> R2 or R1 <<---- R2.

Since more than one secondary key association can exist between two records, an associated record can appear more than once in the same cluster. Indeed, since a secondary key association can hold from a record to itself, the subject record itself can appear as one of its own associated records.

For definitions and details of the types of records and associations that can exist in a network schema, see the DESIGNMANAGER User's Guide.

In a cluster, associated records are placed above and below the subject record, resulting in one, two, or three vertical subclusters, depending on which part or parts of the subject record they are connected to. They appear above or below, in accordance with the convention that single-headed arrows point upward and double-headed arrows point downward.

Exceptions to this convention occur with associated records connected to the left end of the subject record by bidirectional arrows, which are either single-headed at both ends, indicating direct foreign key associations in both directions, or double headed at both ends, indicating multivalued associations in both directions. In each of these cases, the associated record appears below the subject record.

4.2.2 Examples of Clusters

In the following examples, R1 is the subject record and R2, R3, and so on, are associated records.

Example 1. Given the following records and multivalued dependencies (MVDs):

R1(**A,B** ,C) with key A+B
R2(**D** ,E) with key D
R3(**C** ,F) with key C
R4(**A** ,G) with key A
R5(**H** ,I,J) with key H
MVDs: D ---->> A+B, I ---->> A+B, J ---->> A+B

a multivalued association holds from R2 to R1, a direct foreign key association holds from R1 to R3, a direct hierarchical association holds between R1 and R4 such that the key of R1 contains the key of R4, and two secondary key associations exist from R5 to R1. These would be depicted in the cluster for R1 as shown in Figure 4.1.

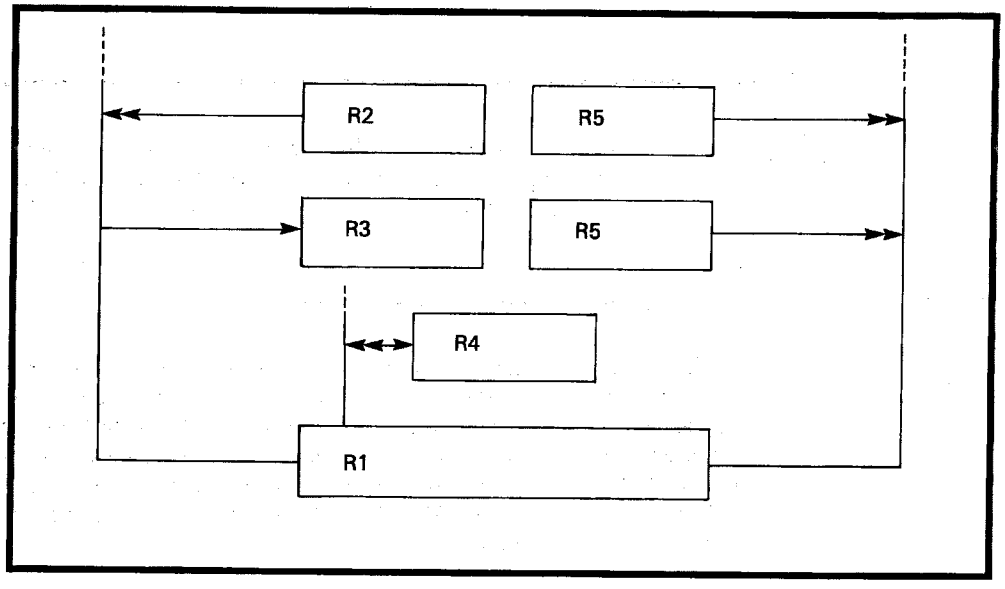

Figure 4.1 Network cluster for a subject record and its associated records displaying direct foreign key, direct hierarchical, multivalued and secondary key associations

Example 2. Given the following records, domain dependency (DD), and MVDs:

R1(**A** ,B,C), a role record with key A
R2(**C** ,D) with key C
R3(**E** ,F) with key E
R4(**A,G** ,H) with key A + G
R5(**I** ,J) with key I
DD: A =====> C
MVDs: A ---->> E, E ---->> A, B ---->> I

a domain association holds from R1 to R2, multivalued associations hold both from R1 to R3 and from R3 to R1, a direct hierarchical association exists between R1

and R4 such that the key of R4 contains the key of R1, and a secondary key association holds from R1 to R5. These would be depicted in the cluster for R1 as shown in Figure 4.2.

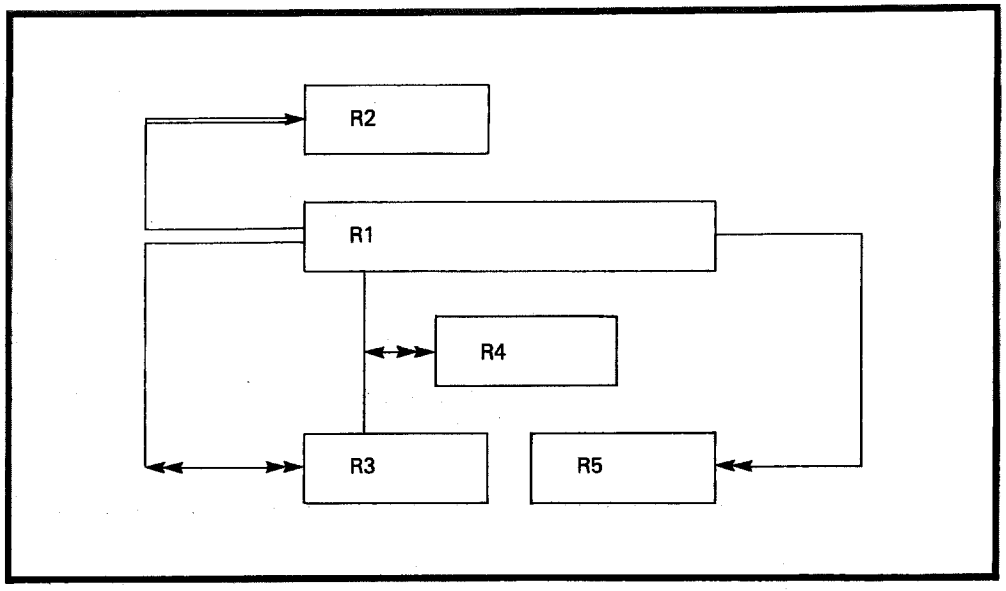

Figure 4.2 Network cluster for a subject record and its associated records displaying domain, hierarchical, secondary key, and bidirectional multivalued associations

4.2.3 Information Given in a Cluster

As indicated in section 4.2, you can specify in the PLOT command whether you want the Network Cluster Plot displayed in summary or detail format. The layout of the plot is the same in either case; in the detail plot the content of each record is reported in greater detail. If the optional User Formatted output facility (selectable unit DSR-UD30) is installed, you can instead enter the name of an appropriate FORMAT member of the Modeling Dictionary containing alternative specifications for the layout and content of the plot.

The information given for the subject record of a cluster in a summary plot is:

- the record number (the number allocated to the record when it was generated in the WBDA)
- the record name (if any has been assigned).

The naming and numbering of records (and relations) in the WBDA is explained in the DESIGNMANAGER User's Guide.

In a detail plot, you get the same information as in the summary plot and, in addition:

- the name(s) of the data element(s) comprising the key of the record
- the name of each non-prime data element in the record, that is, each data element which does not form any part of the key.

The information given for each associated record of a cluster in a summary plot is:

- the record number
- the record name (if any has been assigned)
- the association, represented by a directed arrow, that exists between the subject record and the associated record (see the examples given above).

In a detail plot, you get the same information for each associated record of the cluster as in the summary plot, and, in addition, the name of each data element in the key of the record.

Each cluster in the Network Cluster Plot is followed by information on the secondary key associations displayed in the cluster. The information is output in two parts:

- summary totals of the secondary key associations existing between the subject record and the associated records of the cluster. The totals are reported as follows:
  - the total number of secondary key associations leading into the subject record. As indicated previously, they connect associated records positioned above with the right end of the subject record
  - the total number of secondary key associations leading from the subject record to associated records positioned below it.

  These summary totals will appear, even if the totals are both zero, indicating that no secondary key associations were displayed in the cluster.
- for each secondary key association displayed in the cluster, information is given on its direction and its origin. The information output is dependent on the category of plot (summary or detail) being produced and is described below.

The information output for each secondary key association in a summary plot is:

- the record number of the record from which the secondary key association is directed (the source record) followed by a double-headed arrow and the number of the target record. These are the numbers of the subject record and the associated record and are output in the order indicated by the type of the secondary key association.
- the absolute dependency number of the multivalued dependency (MVD) represented by the secondary key association
- the name(s) of the data element(s) appearing on the left hand side of the MVD represented by the secondary key association.

The information output for each secondary key association in a detail plot is as output for the summary plot and, in addition:

- the record name (if any has been assigned) of both the source record and the target record, and
- for the MVD represented by the secondary key association:
  - the name(s) of the data element(s) appearing on its right hand side
  - the relative dependency number of the MVD
  - the name of the userview or entity from which it originated.

4.3 The Network Schema Association Matrices

4.3.1 The Structure and Purpose of the Matrices

In a Network Cluster Plot, after the clusters for all the records in the Workbench Design Area (WBDA) have been displayed, the network schema association matrices are output. Each matrix is a table of entries summarizing all associations of a particular type or types shown in the clusters between the displayed records.

Each row of a matrix corresponds to a record, as does each column, and is headed by the record number. Thus, each matrix is an n-by-n square array, where n is the total number of records in the WBDA.

The first record number is not necessarily 1; it is one greater than the number of MVD-relations in the WBDA. Thus, row 1 and column 1 in each matrix correspond to record m+1, row 2 and column 2 to record m+2, and so forth, where m is the number of MVD-relations in the WBDA.

Details of the types of records and associations that can exist in a network schema are given in the DESIGNMANAGER User's Guide.

An association is always depicted as holding **from** the row record **to** the column record. Thus, by reading across a row, you can identify the associations of a given type or types that hold from a particular record to the other records. If no association of an applicable type exists from a given record to another, then the corresponding matrix entry is left blank.

The following association matrices are output:

- the hierarchical association matrix, which summarizes all the direct hierarchical associations that exist between records of the network schema
- the non-hierarchical association matrix, which summarizes all the direct foreign key associations, domain associations, and multivalued associations that hold between records of the network schema
- the composite association matrix, which summarizes all the associations depicted in both the hierarchical and non-hierarchical matrices.

Secondary key associations are not covered by any of the matrices because more than one secondary key association can exist from one record to another. (Secondary key associations thus are detailed separately at the end of the individual clusters in which they are displayed.)

4.3.2 The Meaning of the Entries in the Matrices

In the hierarchical association matrix, the following characters are used as entries to indicate the existence of direct hierarchical associations between records:

- the numeral 1 indicates that the key of the row record contains the key of the column record
- the letter M indicates that the key of the column record contains the key of the row record.

The 1 and M entries always appear in **dual** pairs. For example, if the entry in row 3 and column 5 is M, then the entry in row 5 and column 3 will be 1.

In the non-hierarchical association matrix, the following characters are used as entries to denote the existence of the indicated associations between records:

- the numeral 1 indicates that a **direct foreign key association** exists from the row record to the column record
- the letter D indicates a **domain association** from the row record to the column record. This in turn signifies that a domain dependency holds from the key of the row record to the key of the column record
- the letter M indicates that a **multivalued association** exists from the row record to the column record. This in turn means that a multivalued dependency (MVD) holds from the key of the row record to the key of the column record.

These are all unidirectional associations which imply nothing about the existence of an association in the reverse direction. That is, the appearance of a character as the entry in a given position of the non-hierarchical matrix does not indicate the corresponding appearance of a non-blank entry in the **dual** position of the matrix.

The composite association matrix includes all the entries from both the hierarchical and the non-hierarchical association matrices. The following characters are used:

- H1 is the entry corresponding to a 1 entry in the hierarchical association matrix, indicating a direct hierarchical association between the row and column records such that the key of the row record contains the key of the column record
- HM appears in the composite association matrix if an M entry appears in the corresponding position of the hierarchical association matrix indicating that the key of the column record contains the key of the row record
- the appearance of the numeral 1, the letter D, or the letter M in the composite association matrix is taken directly from the non-hierarchical association matrix and has the same significance.

The H1 and HM entries always appear in dual pairs as indicated above for the corresponding 1 and M entries in the hierarchical association matrix.

4.3.3 An Illustrative Example

To illustrate with a simple example, consider an example from the preceding series of panels. Suppose we are given the records and MVDs;

R1(**A,B** ,C) with key A+B
R2(**D** ,E) with key D
R3(**C** ,F) with key C
R4(**A** ,G) with key A
R5(**H** ,I,J) with key H
MVDs: D ---->> A+B, I ---->> A+B, J ---->> A+B

The corresponding cluster diagram for R1 is shown in figure 4.1.

You would get the following hierarchical association matrix indicating the direct hierarchical association that exists between R1 and R4 (with record numbers 4 and 7, respectively; the first three numbers, 1, 2 and 3, are reserved for the MVD-relations generated in the relational schema to represent the three MVDs given above):

	4	5	6	7	8
4				1	
5					
6					
7	M				
8					

Figure 4.3 Hierarchical association matrix for the records and asociations displayed in Figure 4.1

The following non-hierarchical association matrix would be output indicating the direct foreign key association from R1 to R3 and the multivalued association from R2 to R1:

	4	5	6	7	8
4			1		
5	M				
6					
7					
8					

Figure 4.4 Non-hierarchical association matrix for the records and associations displayed in Figure 4.1

The composite association matrix would also be output, combining the entries of the first two matrices. The 1 and M entries of the hierarchical association are converted to H1 and HM entries so as to distinguish them from the non-hierarchical entries. The composite matrix would have the following form:

	4	5	6	7	8
4			1	H1	
5	M				
6					
7	HM				
8					

Figure 4.5 Composite association matrix for the records and associations displayed in Figure 4.1

Note that there also are two secondary key associations in this example that hold from R5 to R1, corresponding to the second and third MVDs given above, I- - - - >> A+B and J - - - - >> A+B. These associations are not represented in any of the association matrices. Instead, they are depicted in the cluster diagram for R1 (and also in the cluster diagram for R5). Details appear immediately after each cluster in which they are pictured.

CHAPTER 5 THE CONSOLIDATED NETWORK PLOT

5.1 Overview

After you have used the DESIGN command to generate a conceptual schema, you can issue the PLOT command to produce a Consolidated Network Plot. This provides you with a diagrammatic overview of the records and associations comprising the network representation of the conceptual schema. They are displayed without details of the record content.

The Consolidated Network Plot is complementary to the Network Cluster Plot, which provides details, for each record of the network schema, of its content and all its associations with the other records of the schema. The Network Cluster Plot is described in Chapter 4.

The Consolidated Network Plot can be useful in a number of ways. For example:

- it gives you an easy-to-understand overall picture of the generated conceptual schema
- you gain added perception of the inherent entities of the organizational enterprise model. It can be used either to identify new entities or to suggest changes to an established model
- it can be used as a basis for a first cut database design in the case of a network, hierarchical, or inverted file database management system.

The associations displayed between records in the Consolidated Network Plot include the following types:

- direct foreign key associations
- direct hierarchical associations
- domain associations
- multivalued associations.

Secondary key associations are not displayed between records in the Consolidated Network Plot because more than one secondary key association can exist from one record to another (They are displayed in the Network Cluster Plot, and details are given at the end of each cluster in which they appear.)

Multivalued (and secondary key) associations are used in a network schema to represent multivalued dependencies (MVDs) between data elements. In a relational schema, on the other hand, an MVD is not represented by an association. Instead, it is represented by a single relation, which can be an all-key MVD relation, an FD-relation, or a role relation.

The records displayed in a Consolidated Network Plot can be of any type, including:

- FD-records
- role records
- assumed records

Definitions and details of the types of records and associations that can exist in a network schema can be found in the DESIGNMANAGER User's Guide.

In a Consolidated Network Plot, records and associations are displayed as boxes and connecting **links,** where the links appear as unidirectional and bidirectional arrows. If such a plot were displayed as a pure network, you would find that the number of arrows that crossed one another would, in general, create a mass of confusing detail. In the Consolidated Network Plot, this is avoided completely by the tactic of displaying the network of boxes as an equivalent hierarchical (tree) structure. The composition of the network is not affected, only the way it is represented. The great advantage of the hierarchical display is that no arrows will cross no matter how large and complex a schema has been generated. This makes it much easier for you to perceive the overall structure of the schema.

The tree structure starts with a single box, the **seed,** and spreads out hierarchically to the right in columnar levels. Successive levels consist of vertically aligned **child** boxes, each connected to a **parent** box at the preceding level. The first level consists of only the seed. The second level contains children of the seed, the third level contains children of the level two boxes, and so on. A box that has no child at the next level is called a **leaf.**

In addition to the representation of the network schema as an equivalent hierarchical structure, a further simplifying feature has been incorporated in the Consolidated Network Plot which serves to reduce the number of boxes appearing in the diagram. In the tree structure, no record is represented more than once by a box. Each other occurrence of the record and any **sub-branch** of lower level records emanating from it in the tree is represented in the plot by a single **pointer** instead of duplicating the entire sub-branch for the occurrence.

In a Consolidated Network Plot, boxes are displayed with dashed outlines and pointers with dotted outlines. An example illustrating the use of pointers appears in section 5.2.2 of this manual.

There are a number of PLOT command options available to you for the Consolidated Network Plot which can further simplify the display. You can either show all the records of the schema or an individual hierarchy based on a specified (or defaulted) seed. You can indicate whether record names or keys are to be displayed in boxes and pointers. You can also specify and thus limit the types of associations to be displayed. These options enable you to focus attention on desired subsets of the schema and on desired types of access through the schema.

If you have the optional User Formatted Output facility (selectable unit DSR-UD30) installed, you can also specify a meaningful title for the plot by entering it as a string in the CONTROLMANAGER command SET FORMAT-TITLE, before you issue the PLOT command. The User Formatted Output facility is described in the correspondingly named manual.

5.2 Details of the Consolidated Network Plot

5.2.1 Layout of the Consolidated Network Plot

In the Consolidated Network Plot, the records of the generated network schema are represented by boxes and pointers; associations between the records are represented by connecting links. In the output medium, boxes are displayed with dashed outlines, pointers with dotted outlines, and links appear as unidirectional and bidirectional arrows depicting the different types of associations. Record numbers are displayed on the left lower boundary of the corresponding box or pointer. Depending in part on whether or not the record has been named, the interior of a box or pointer contains the record name or the record key, or it is blank.

Boxes and their connecting links are laid out on the output medium in **logical lines.** Each logical line occupies six physical print lines and contains one or more boxes and at most one pointer (perhaps none). Logical lines are numbered consecutively, beginning with one. These numbers are very useful as they are used in pointers and in the Numeric and Alphabetic Directories (described later in this series of panels) to help you locate any record displayed in the plot.

The boxes and pointers are laid out from left to right on the logical lines in order of the hierarchical levels they form. The highest level is that of the seed, which is placed in the upper left hand corner of the plot. Each lower level box (or pointer) appears to the right of its parent. All the children of a parent box are shown at the next level, one below the other, each connected to the parent.

The Consolidated Network Plot starts from the seed, which appears in the upper left hand corner of a page as the only box on logical line number 1. It is also the only level 1 box in the hierarchy. The level 2 boxes consist of the children of the seed, that is all the records which have direct associations with the seed. The first of these is placed on logical line 2 at level 2. Note that the level two boxes appear slightly to the right of the level 1 seed and that successive levels appear increasingly further to the right.

The level 3 boxes and pointers are the children of the level 2 boxes. If the first level 2 box has any children, the first of these is placed on logical line 2 to the right of (and connected with) its level 2 parent. The placement of lower level boxes and pointers on the logical lines follows the same pattern, with children appearing to the right of their parents. A box that has no children is called a **leaf.**

A very simple example of a Consolidated Network Plot is given in Figure 5.1.

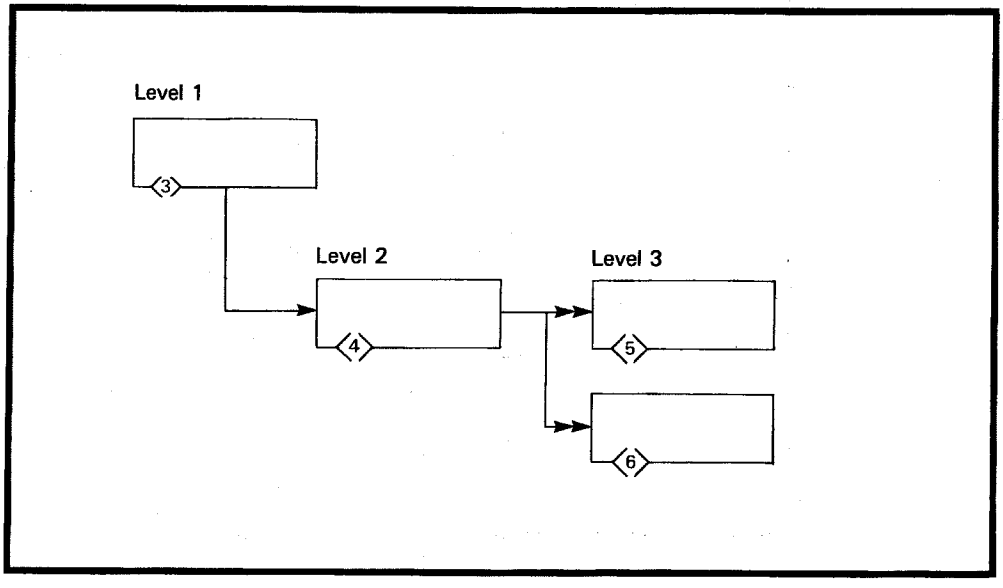

Figure 5.1 Example of a Consolidated Network Plot

In this example, a foreign key association is depicted from record 3 (the seed for the plot) to record 4 and multivalued associations from record 4 to records 5 and 6.

The first record is assigned the number 3 under the assumption that both of the multivalued associations represented in the plot arise from multivalued dependencies which, in the relational schema, are associated with all-key MVD-relations rather than FD-relations or role relations. The MVD-relations then would be numbered 1 and 2.

The numbering of relations and records in the Workbench Design Area is explained in the DESIGNMANAGER User's Guide.

5.2.2 Use of Pointers in the Consolidated Network Plot

In the Consolidated Network Plot, a record is represented by a pointer instead of a box if it has already been displayed as a box elsewhere in the plot, either at a higher level on any (other) logical line or at the same level but on a preceding logical line. The purpose is to display each record only once as a box along with any lower level children it may have. Thereafter, the record is displayed as a pointer (without lower level children) to the logical line in which it appeared as a box. The number of this logical line always appears on the right upper boundary of the pointer. A record may be displayed as a pointer several times in the plot, but it cannot be displayed more than once as a box.

Consider the sample plot in Figure 5.2.

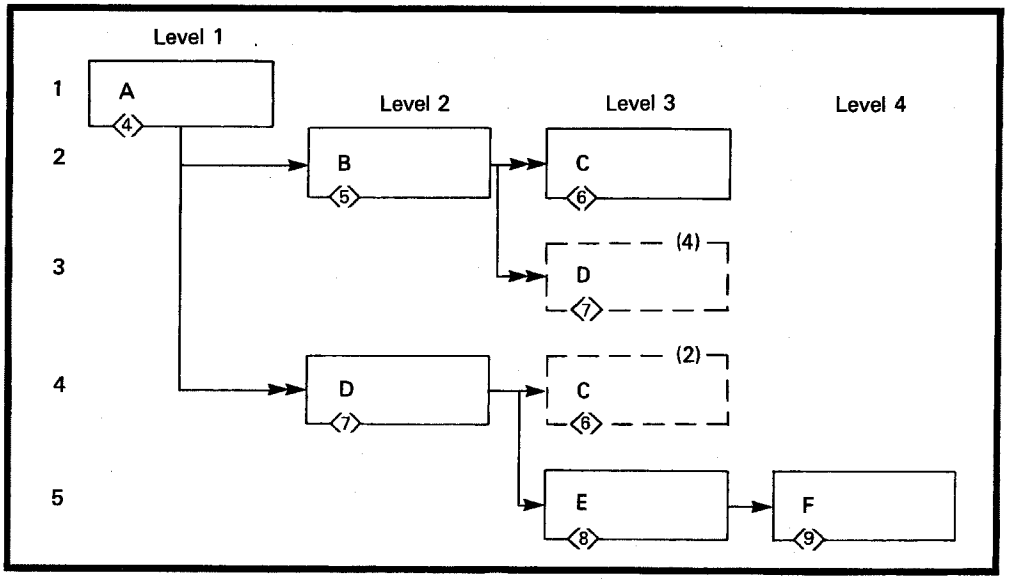

Figure 5.2 Sample plot showing use of pointers

In the sample plot you should note that:

- record D appears as a pointer in level 3 because it was already displayed as a box in level 2
- record C appears as a pointer in level 3 on logical line 4 because it appeared as a box in the same level on logical line 2
- no pointers are required for records E and F because they are dependents of record D and their repetition is indicated by the pointer for record D.

In the example, record A is assigned the number 4 rather than 1 because it is assumed that the numbers 1, 2, and 3 have already been assigned to MVD-relations in the relational schema (corresponding to the three multivalued dependencies represented by the three double headed arrows appearing in the sample plot).

There is one other set of circumstances requiring the use of pointers. This occurs when there is not enough room on a logical line for all the records that should be displayed on it. That is, the last box for which there is room has one or more children at the next level (it is not a leaf). In this case, the box is replaced by a pointer and the record it represents is placed in a **continuation seed** list. Each continuation seed is then processed along with its **dependents** (that is, its children, its children's children, and so on), if any, further down in the diagram just as if it were the seed for a new Consolidated Network Plot. That is, it will appear as a box in the seed position at the top of a new page. Pictorially, it will appear as the seed of a new tree. Structurally, however, it will be a continuation of the incomplete branch.

A plot which begins with a continuation seed is called a **continuation plot.** It is a continuation of the main plot, which begins with the original (or **primary**) seed. Continuation plots appear after the main plot. Logical line numbers are assigned consecutively throughout each plot and continue consecutively from one plot to another.

In contrast with pointers, there is only one circumstance in which a box will have an entry on its right upper boundary, that is, when the box is a continuation seed. In this case, the entry is the number of the logical line from which it is continued.

5.2.3 Additional Plots in the Consolidated Network Plot

In the Consolidated Network Plot, after the primary seed and any continuation seeds have been processed, as previously described, DESIGNMANAGER optionally (if the ALL keyword has been specified in the PLOT command) looks for any **additional seeds** that may be required to ensure that every record in the network schema is displayed. A plot which begins with an additional seed is called an **additional plot.**

An additional plot is **not** a continuation of the main plot. It represents a separate hierarchy, not just pictorially but structurally as well. The seed for an additional plot appears in the seed position at the top of a new page. The logical line number of the seed follows consecutively from the last logical line of the preceding plot.

It is possible in this process of producing additional plots to display **seed only** hierarchies. That is, an additional seed may itself be a leaf with no children. In this case, the additional plot consists of only a single box.

You can always distinguish between a continuation seed and an additional seed because the former has a logical line number entered on its right upper boundary whereas the latter does not.

5.2.4 The Use of Directories with the Consolidated Network Plot

At the end of the Consolidated Network Plot, two directories are given for referencing the records displayed, the Numeric Directory and the Alphabetic Directory. The Numeric Directory is ordered by record number and shows, for each record displayed:

- in the first column, the record number and its name (if a name has been assigned)
- in the second column, the logical line number on which it is displayed as a box
- in the third column, every logical line number on which it is displayed as a pointer.

The Alphabetic Directory contains exactly the same information, but only for records which have been named. They are listed in alphanumeric order of record name.

The directories provide another way to distinguish between a continuation seed and an additional seed. A continuation seed will have a single logical line number entry in the third column of the directory indicating the line from which the plot has been continued, whereas an additional seed will have no entry in the third column.

Figure 5.3 shows the Numeric Directory that would result from the plot used in Figure 5.2.

NUMERIC DIRECTORY

RECORD	BOX	POINTERS
4	1	
5	2	
6	2	4
7	4	3
8	5	
9	5	

Figure 5.3 Numeric Directory produced in association with the Consolidated Network Plot of Figure 5.2

Text formed from a record key and displayed in a box or pointer consists of up to three lines. Each line of text is formed from a data element contained in the key. If the key contains more than one data element, the lines are formed in alphanumeric order of the data element names. Each line is limited to a maximum of eleven characters, comprising either:

- the data element name, or
- the first eleven characters of the name.

As a consequence, it is possible for the same text to be formed from the keys of different records. However, the text displayed is intended only as an aid to identification. Positive identification of the record being represented is given by the record number which appears on the left lower boundary of each box or pointer displayed.

Some examples of text formed from record keys are given in the table shown in Figure 5.4:

Key	Text Formed	
EMPLOYEE-NO	EMPLOYEE-NO	(no truncation)
EMPLOYEE-NAME	EMPLOYEE-NA	(1st 11 characters)
DEPARTMENT-NO, EMPLOYEE-NAME, OFFICE-NO	DEPARTMENT- EMPLOYEE-NA OFFICE-NO	(1st 11 characters) (1st 11 characters) (no truncation)
DEPARTMENT-NO, EMPLOYEE-NAME, OFFICE-NO, PROJECT-NO	DEPARTMENT- EMPLOYEE-NA OFFICE-NO,	(1st 11 characters) (1st 11 characters) (no truncation) (omitted)

Figure 5.4 Text formed from record keys, where the LABEL clause specifies KEYS and TEXT

5.3.4 Using the SEED Clause in the PLOT Command

The SEED clause is used in the PLOT command to select a record as the **primary seed** for the Consolidated Network Plot. The syntax of the clause (within the PLOT NETWORK-SCHEMA CONSOLIDATED specification) is:

```
[SEED {NUMBER record-number}]
      {NAME record-name     }
```

The record selected as the seed must be identified either by record number in the **NUMBER** subclause or by name in the **NAME** subclause.

The ability to select the seed for the plot gives you a measure of control over the diagram produced. It is generally a good idea to select, as the seed, a root record with many connections to other records. With a list of root records, you can determine this by examining the Network Cluster Plot and its associated matrices.

To obtain a list of root records, enter the DESIGNMANAGER command:

```
LIST ROOTS RECORDS;
```

For details of the LIST command, see the DESIGNMANAGER User's Guide.

The Network Cluster Plot is described in Chapter 4 of this manual. See section 5.4 for a description of Root Records.

If the SEED clause is omitted, then the lowest numbered record in the network schema is automatically selected as the default seed.

5.3.5 Using the VIA Clause in the PLOT Command

The VIA clause is used in the PLOT command to select the types of links which can be used in the Consolidated Network Plot to represent associations between records of the network schema. The syntax of the clause (within the PLOT NETWORK-SCHEMA CONSOLIDATED specification) is:

```
[VIA {LINKS link-code-list}]
     {ALL LINKS            }
```

In the above syntax, **link-code-list** is a list of one or more distinct link codes, separated by commas. A **link-code** is a number from 1 to 12 identifying one of the twelve link types. For example:

```
PLOT NETWORK-SCHEMA CONSOLIDATED VIA LINKS 1,2,4;
```

The list of possible link codes, the link types they identify, and the associations represented by the links are given in the following table.

Link code	Link type	Association	Default
1	----->	one	*
2	---->>	many	*
3	<-----	one	*
4	<---->	one-one	*
5	<--->>	one-many	*
6	<-H->>	hierarchical	*
7	<<----	many	
8	<<--->	many-one	
9	<<-H->	hierarchical	
10	<<-->>	many-many	*
11	=====>	role	
12	<=====	role	*

Figure 5.5 Summary of link codes, link types and their default settings, and the associations which the links represent

In the table above, the last column contains an asterisk for each link-type which is selected as an automatic default when the VIA clause is omitted. In the table, a direct foreign key association is indicated by the word **one,** a multivalued association by **many,** a direct hierarchical association by **hierarchical,** and a domain association by **role.** Thus, a one-many association is a direct foreign key association in one direction and a multivalued association in the reverse direction. Similarly, a many-many association is multivalued in both directions.

Definitions and details of the types of records and associations that exist in a network schema are explained in the DESIGNMANAGER User's Guide.

If **ALL LINKS** is specified in the VIA clause, then all the link types shown in the table above are eligible for display in the plot. They are selected in ascending order of link code number, beginning with 1.

If the VIA clause is omitted, a default selection of link codes is taken, as indicated by the asterisks in the last column of the table. The order of the selection is by ascending link code number, beginning with 2. The default selection displays one-associations (that is, direct foreign key associations) going to the left and many-associations going to the right, which can often provide a simpler visual interpretation of the schema.

The order in which link codes are listed in the VIA clause is significant. It dictates the order in which the children of any box will be displayed in the plot. For example, if the link codes specified are 5 and 2 (in that order), then each child connected with its parent box by a one-many association (from the parent box) will be displayed before (that is, above) every child connected by a simple many association.

5.3.6 Entering a Title for the Consolidated Network Plot

If you have the optional User Formatted Output facility (selectable unit DSR-UD30) installed, you can provide a meaningful title for the Consolidated Network Plot by means of the SET FORMAT-TITLE command. You enter:

```
SET FORMAT-TITLE 'string';
```

where **string** is a delimited string of printable characters, including blank spaces (hexadecimal 40).

If you issue a SET FORMAT-TITLE command prior to the PLOT NETWORK-SCHEMA CONSOLIDATED command, the **string** specified in the SET FORMAT-TITLE command will be displayed enclosed in a box at the top of the plot.

The User Formatted Output facility and the SET FORMAT-TITLE command are explained in the User Formatted Output manual.

5.4 Root Records in the Consolidated Network Plot

You can use the DESIGNMANAGER LIST command either to identify all the records of a generated schema or to identify just the root records. In the latter case, you would enter either:

```
LIST ROOTS;
```

or

```
LIST ROOTS RECORDS;
```

A **root record** is defined as a record that satisfies the following conditions:

- it is not the target record in any multivalued association (unless there is also a multivalued association in the reverse direction between the same two records; that is, unless they are related by a **many-many** association)
- it is not the source record in any foreign key association; that is, it does not contain the key of any other record as a non-key set
- its key does not contain the key of any other record (in a hierarchical association).

In terms of the link types described in section 5.3.5, a root record is a record that can be represented in a Consolidated Network Plot by a box that has no double-headed arrow entering it (unless the arrow is bidirectional and double-headed at both ends) and no single-headed arrow leaving it.

The purpose of identifying root records is to help you to select **good** seeds for the Consolidated Network Plot, that is, seeds which permit the display of the network in a hierarchically top-down direction. This is of particular importance if you issue the PLOT CONSOLIDATED command without specifying a VIA clause. (Recall that this results in a plot where hierarchical and multivalued associations are represented by arrows which are double-headed to the right, and foreign key associations by arrows which are single-headed to the left.)

In such a case, the choice of a **poor** seed as the starting point, say part of the way **down** the hierarchy, would result in only part of the hierarchy being displayed in a single plot. (You could still have all the records displayed in additional plots if you specified the ALL option in the PLOT command, but the resulting diagram would be fragmented and more difficult to interpret.) A root record is more likely to be a good seed, that is, one which displays more of the hierarchy without requiring the use of the ALL option.

USAGE DIRECTORY

Note: Entries in this directory refer you to the relevant InfoBank panels and the sections in this manual where they may be found.

C

Consolidated Network Plot	UPG4000	5
additional plots	UPG4230	5.2.3
layout	UPG4210	5.2.1
overview	UPG4100	5.1
PLOT command ALL option	UPG4310	5.3.2
PLOT command LABEL option	UPG4320	5.3.3
PLOT command SEED option	UPG4330	5.3.4
PLOT command VIA option	UPG4340	5.3.5
use of directories	UPG4240	5.2.4
use of pointers	UPG4220	5.2.2
use of root records	UPG4400	5.4
use of the SET FORMAT-TITLE command	UPG4350	5.3.6

D

DESIGNMANAGER command output: plots	UPG0000	1
DESIGNMANAGER optional additional facilities: User Printer Graphics	UPG0000	1
DESIGNMANAGER plots	UPG0000	1
Consolidated Network Plot	UPG4000	5
Network Cluster Plot	UPG3000	4
overview	UPG1000	2
Relational Cluster Plot	UPG2000	3
DESIGNMANAGER selectable units: User Printer Graphics	UPG0000	1

N

Network Cluster Plot	UPG3000	4.3
composite association matrix	UPG3320	4.3.2
details of a cluster	UPG3200	4.2
examples of clusters	UPG3220	4.2.2
hierarchical association matrix	UPG3320	4.3.2
information given in a cluster	UPG3230	4.2.3
layout of a cluster	UPG3210	4.2.1
network schema association matrices	UPG3300	4.3
non-hierarchical association matrix	UPG3320	4.3.2
overview	UPG3100	4.1
Network schema association matrices	UPG3300	4.3
meaning of the entries	UPG3320	4.3.2
structure and purpose	UPG3310	4.3.1

P

PLOT command output UPG0000 1
- overview UPG1000 2
- Consolidated Network Plot UPG4000 5
- Network Cluster Plot UPG3000 4
- Relational Cluster Plot UPG2000 3
- output from UPG0000 1

R

Relational schema association matrix ..... UPG2300 ..... 3.3

Relational Cluster Plot UPG2000 3
- details of a cluster ..... UPG2200 ..... 3.2
- examples of clusters ..... UPG2220 ..... 3.2.2
- information given in a cluster ..... UPG2230 ..... 3.2.3
- layout of a cluster ..... UPG2210 ..... 3.2.1
- overview ..... UPG2100 ..... 1.1
- relational schema association matrix ..... UPG2300 ..... 3.3

Root records: use of in the Consolidated Network Plot ..... UPG4400 ..... 5.4

U

User Printer Graphics UPG0000 1
- overview of the plots UPG1000 2
- Consolidated Network Plot UPG4000 5
- Network Cluster Plot UPG3000 4
- Relational Cluster Plot UPG2000 3