ASG-Manager Products™ Systems Administrator's Guide

Version: 2.5

Publication Number: MPR2100-25

Publication Date: December 2000

The information contained herein is the confidential and proprietary information of Allen Systems Group, Inc. Unauthorized use of this information and disclosure to third parties is expressly prohibited. This technical publication may not be reproduced in whole or in part, by any means, without the express written consent of Allen Systems Group, Inc.

© 1998-2001 Allen Systems Group, Inc. All rights reserved.
All names and products contained herein are the trademarks or registered trademarks of their respective holders.

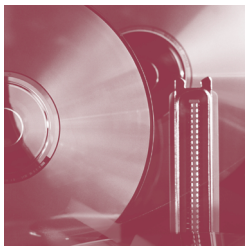

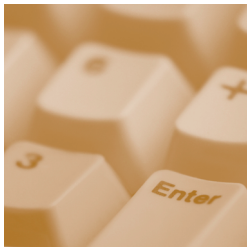

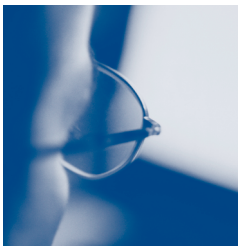

ASG Worldwide Headquarters Naples, Florida USA | asg.com
1333 Third Avenue South, Naples, Florida 34102 USA Tel: 941.435.2200 Fax: 941.263.3692 Toll Free: 1.800.932.5536

ASG Documentation/Product Enhancement Fax Form

Please FAX comments regarding ASG products and/or documentation to (941) 263-3692.

Company Name	Telephone Number	Site ID	Contact name

Product Name/Publication	Version #	Publication Date
Product:		
Publication:		
Tape VOLSER:		

Enhancement Request:

© 2001 Allen Systems Group, Inc.
All names and products are trademarks or registered trademarks of their respective holders.

ASG Support Numbers

ASG provides support throughout the world to resolve questions or problems regarding installation, operation, or use of our products. We provide all levels of support during normal business hours and emergency support during non-business hours. To expedite response time, please follow these procedures.

Please have this information ready:

- Product name, version number, and release number
- List of any fixes currently applied
- Any alphanumeric error codes or messages written precisely or displayed
- A description of the specific steps that immediately preceded the problem
- The severity code (ASG Support uses an escalated severity system to prioritize service to our clients. The severity codes and their meanings are listed below.)

If You Receive a Voice Mail Message:

1. Follow the instructions to report a production-down or critical problem.
2. Leave a detailed message including your name and phone number. A Support representative will be paged and will return your call as soon as possible.
3. Please have the information described above ready for when you are contacted by the Support representative.

Severity Codes and Expected Support Response Times

Severity	Meaning	Expected Support Response Time
1	Production down, critical situation	Within 30 minutes
2	Major component of product disabled	Within 2 hours
3	Problem with the product, but customer has work-around solution	Within 4 hours
4	"How-to" questions and enhancement requests	Within 4 hours

ASG provides software products that run in a number of third-party vendor environments. Support for all non-ASG products is the responsibility of the respective vendor. In the event a vendor discontinues support for a hardware and/or software product, ASG cannot be held responsible for problems arising from the use of that unsupported version.

Business Hours Support

Your Location	Phone	Fax	E-mail
United States and Canada	800.354.3578 1.941.435.2201 **Secondary Numbers:** 800.227.7774 800.525.7775	941.263.2883	support@asg.com
Australia	61.2.9460.0411	61.2.9460.0280	support.au@asg.com
England	44.1727.736305	44.1727.812018	support.uk@asg.com
France	33.141.028590	33.141.028589	support.fr@asg.com
Germany	49.89.45716.300	49.89.45716.400	support.de@asg.com
Singapore	65.224.3080	65.224.8516	support.sg@asg.com
All other countries:	1.941.435.2201		support@asg.com

Non-Business Hours - Emergency Support

Your Location	Phone	Your Location	Phone
United States and Canada	800.354.3578 1.941.435.2201 **Secondary Numbers:** 800.227.7774 800.525.7775 **Fax:** 941.263.2883		
Asia	011.65.224.3080	**Japan/Telecom**	0041.800.9932.5536
Australia	0011.800.9932.5536	**New Zealand**	00.800.9932.5536
Denmark	00.800.9932.5536	**South Korea**	001.800.9932.5536
France	00.800.9932.5536	**Sweden/Telia**	009.800.9932.5536
Germany	00.800.9932.5536	**Switzerland**	00.800.9932.5536
Hong Kong	001.800.9932.5536	**Thailand**	001.800.9932.5536
Ireland	00.800.9932.5536	**United Kingdom**	00.800.9932.5536
Israel/Bezeq	014.800.9932.5536		
Japan/IDC	0061.800.9932.5536	**All other countries**	1.941.435.2201

ASG Web Site

Visit http://www.asg.com, ASG's World Wide Web site.

Submit all product and documentation suggestions to ASG's product management team at http://www.asg.com/products/suggestions.asp

If you do not have access to the web, FAX your suggestions to product management at (941) 263-3692. Please include your name, company, work phone, e-mail ID, and the name of the ASG product you are using. For documentation suggestions include the publication number located on the publication's front cover.

Contents

Preface vii

About this Publication vii

Publication Conventions viii

1 Introduction 1

The Systems Administrator 1

The Manager Products Start-up Procedure 4

Managing the MP-AID 5

2 Installing Manager Products 7

3 Creating the MP-AID and Administration Dictionary 11

The MP-AID 11
Creating the MP-AID 11
Initializing the MP-AID 13
Concatenated MP-AIDs 13

The Manager Products Administration Dictionary 17
Overview 17
The Manager Products Administration Dictionary Member Types 17
Creating the Manager Products Administration Dictionary 18
Access and Security Considerations 19

4 Logging On to Manager Products 21

Logon Overview 21
The LOGON Command 22
The Logon Exit 22
The Autolog Procedure 22

The Logon Procedure 23

The LOGON Command 24

Logon and Global Profiles **25**
Overview 25
Logon Profiles 26
The LOGON-PROFILE Dictionary Member Type Syntax 27
Global Profiles 28
The GLOBAL-PROFILE Dictionary Member Type Syntax 29
Logon Profiles for Controllers 30

The Autolog Procedure **32**

Limit to the Number of Logon Attempts **33**

5 Updating the MP-AID **35**

Read/Write Mode **36**

All Users Updating the MP-AID **36**

Controllers Updating the MP-AID **38**

Systems Administrator Updating the MP-AID **40**

Effect on MP-AID Date and Time Records **41**

Constructing MP-AID Members **41**
The CONSTRUCT Command 41
Constructing an Individual Member onto the MP-AID 43
Constructing All Members of a Specified Type onto the MP-AID 43
Constructing Changed Members of a Specified Type onto the MP-AID 44
The CONSTRUCT Command Syntax 44

Deleting Members from the MP-AID **45**
The MP-AID DELETE Command 45
The MP-AID DELETE Command Syntax 46

Resetting MP-AID Members **47**
The MP-AID RESET Command 47
Resetting MP-AID PROFILE Members 48
Resetting MP-AID INFOBANK Members 49
Resetting MP-AID USER-MEMBERs 49
Resetting UDS-TABLE Members 50
The MP-AID RESET Command Syntax 52

6 Interrogating the MP-AID **53**

MP-AID ANALYZE **55**
Simulating a Changed Blocksize 56
Explanation of Display Tables 56
Choosing an Optimum Blocksize 57
MP-AID ANALYZE Syntax 57

MP-AID BUFFERS **58**

Example of Output 58
Explanations of Output 59
Changing the Size of the Buffer Pool 60
Monitoring Buffer Steals. 60
Gaining Read-only Access to Other MP-AIDs 61
MP-AID BUFFERS Syntax 61

MP-AID CONCATENATION 62
Listing the Current MP-AID Concatenation 63
Turning Concatenation Off 63
MP-AID CONCATENATION Syntax 63

MP-AID DIAGNOSE 64
Checking the Integrity of the MP-AID 64
Repairing Inconsistencies on the MP-AID 65
Error Codes Reported by the MP-AID DIAGNOSE Command 66
Examples of Output from the MP-AID DIAGNOSE Command 67
MP-AIDE DIAGNOSE Syntax. 68

MP-AID EXEC-LIST 68
MP-AID EXEC-LIST Syntax 69

MP-AID LIST 71
Description of Output 71
Listing Selected Member Types 73
Listing Members Added by a Specific User 73
Listing Members in Date Order 74
Listing Members within a Given Alphanumeric Range 74
Listing Members on a Secondary MP-AID 75
Which Users Can List Which Members 76
MP-AID LIST Syntax 76

MP-AID PRINT 78
Printing Members Held on a Secondary MP-AID 79
Examples of the MP-AID PRINT Command 80
Which Users Can Print Which Members 81
MP-AID PRINT Syntax 81

MP-AID STATUS 82
MP-AID STATUS Syntax 83

7 MP-AID Backup, Reconfiguration, and Copying 85

MP-AID Backup 85

Reconfiguring the MP-AID 87
Procedure 1 87
Procedure 2 87
Procedure 3 87

Copying Members from the MP-AID 88

Unloading, Loading, and Reloading the MP-AID 88
MP-AID UNLOAD. 89
MP-AID RELOAD 92
MP-AID LOAD 93

MP-AID BACKUP-DETAILS 97

Effect of Backup and Reconfiguration on MP-AID Date and Time Records 98

8 Miscellaneous Commands 99

The MP-AID CONTROL CMS Command 99

The MP-AID CONTROL RESERVE Command 101

The MP-AID DISABLE Command. 102

The MP-AID ENABLE Command 103

The MP-AID FLAG Command 103

The MP-AID PASSWORD Command 104

The SET DATASET-REUSE Command 105

The WAIT Command 106
Examples 106

9 Tailoring the Operating Environment 107

Introduction 108

SET Commands that Affect Command Syntax and Availability 110
The SET AMBIGUITY-ASSUMPTION Command 110
The SET-LINE-COMMAND Command 111
The SET PRIMARY-COMMAND Command 112
The SET STRING-DELIMITER Command 115

SET Commands that Affect Command Timing and Command Processing 116
The SET BUFFER-LIMIT Command 116
The SET EXCP-LIMIT Command 117
The SET INTERROGATE-ENQUEUE Command 118
The SET IO-FLUSH-LIMIT Command 120
The SET OUTPUT-LINE-LIMIT Command 121
SET and QUERY FREE-POOL 121
The SET EXTENDED-LUW Command 122
The SET EXTENDED-NOPRINT Command 123

SET Commands that Affect the InfoView Software 124
The SET INFOBANK-ENTRY Command 124
The SET HELP-ENTRY Command 124

The SET INDEX-PANEL Command 125
The SET RESERVED-INFOBANK-LINE Command. 126
SET and QUERY TOP-MENU-ENTRY Command 127

SET Commands that Affect the Language and Keyboard Interpretation 127
The SET CHARACTER-TRANSLATION Command 127
The SET KANJI-MODE Command 129
The SET KANJI-STRING-DELIMITER Command 130
SET and QUERY MESSAGE-LANGUAGE Command 131

SET Commands that Affect Physical Storage Location of External Datasets . . . 132
The SET VIRTUAL INPUT/OUTPUT (SET VIO) Command 132

10 Multi-tasking with Manager Products—the Subtasking Environment 135

Establishing a Subtasking Environment 137

Sending Commands to a Subtask 137

Manipulating Output Generated by a Subtask 139

Terminating a Subtask 140

Monitoring Subtask Activity 140

Naming a Subtask 142

Direct Communication with a Subtask 142

Automatic Execution of a Subtask. 144

Subtask Synchronization 145
SUBTASK WAIT Command 145
WAIT Command. 145
SUBTASK and SUBTENV Procedures Language Functions 146

Terminating a Subtasking Environment 146

Subtask Abnormal Termination 146

Subtask Resource Sharing 147

SUBTASK Syntax 148

Points to Note. 149

11 Manager Products Virtual Dictionary Facility 151

Introduction and Overview 151

Virtual Dictionary Creation—Commands, Defaults, and General Information . 152

Virtual Dictionary Creation—Specifying Virtual Storage Allocations 153

Virtual Dictionary Creation—Specifying the Number of Statuses 154

Virtual Dictionary Creation—Specifying a Log Dataset and What Will Be Logged . 155

Virtual Dictionary Creation—Specifying Logical Blocksizes 156

VCREATE Syntax 156

Index. 159

Preface

This *ASG-Manager Products Systems Administrator's Guide* describes the function and commands of the Systems Administrator at an installation using ASG-Manager Products (herein called Manager Products).

Allen Systems Group, Inc. (ASG) provides professional support to resolve any questions or concerns regarding the installation or use of any ASG product. Telephone technical support is available around the world, 24 hours a day, 7 days a week.

ASG welcomes your comments, as a preferred or prospective customer, on this publication or on any ASG product.

About this Publication

This publication consists of these chapters:

- Chapter 1, "Introduction," introduces the concept of the systems administrator and the Manager Products Administrative and Information Dataset (MP-AID). It provides an overview of the functions of the Systems Administrator.
- Chapter 2, "Installing Manager Products," concerns the installation of Manager Products. It should be read in conjunction with the relevant Manager Products installation manual.
- Chapter 3, "Creating the MP-AID and Administration Dictionary," describes how the MP-AID and the Manager Products Administration Dictionary are created and initialized.
- Chapter 4, "Logging On to Manager Products," describes the Manager Products logon procedure and how to define Logon Profiles and Global Profiles.
- Chapter 5, "Updating the MP-AID," describes the MP-AID updating commands that are available to the Systems Administrator.
- Chapter 6, "Interrogating the MP-AID," describes the MP-AID interrogation commands that are available only to the Systems Administrator.

- Chapter 7, "MP-AID Backup, Reconfiguration, and Copying," describes how certain MP-AID housekeeping functions are performed, including MP-AID backup and reconfiguration.
- Chapter 8, "Miscellaneous Commands," describes certain miscellaneous commands helpful to the Systems Administrator in maintaining the MP-AID and InfoBank (the Manager Products online documentation system).
- Chapter 9, "Tailoring the Operating Environment," discusses the various methods available to the Systems Administrator for tailoring the users' operating environment when logged on to Manager Products.
- Chapter 10, "Multi-tasking with Manager Products—the Subtasking Environment," provides information on the Subtasking Facility that allows parallel execution of Manager Products commands and procedures.
- Chapter 11, "Manager Products Virtual Dictionary Facility," describes the creation of a Manager Products Virtual Dictionary.

Publication Conventions

Allen Systems Group, Inc. uses these conventions in technical publications:

Convention	Represents
ALL CAPITALS	Directory, path, file, dataset, member, database, program, command, and parameter names.
Initial Capitals on Each Word	Window, field, field group, check box, button, panel (or screen), option names, and names of keys. A plus sign (+) is inserted for key combinations (e.g., Alt+Tab).
`lowercase italic monospace`	Information that you provide according to your particular situation. For example, you would replace *`filename`* with the actual name of the file.
`Monospace`	Characters you must type exactly as they are shown. Code, JCL, file listings, or command/statement syntax. Also used for denoting brief examples in a paragraph.
Vertical Separator Bar (|) with underline	Options available with the default value underlined (e.g., Y|N).

1 Introduction

This chapter includes these sections:

The Systems Administrator 1

The Manager Products Start-up Procedure 4

Managing the MP-AID 5

Note:

You can execute Manager Products in either a client/server (MPSF) mode or a non-client/server (standard) mode. This publication assumes the use of standard mode and only documents minor differences between the two modes. When executing under MPSF you can create repositories and MPAIDs using the Data-in-Virtual (DIV) access method. The DIV access method and significant MPSF installation and usage differences are documented in the *ASG-Manager Products Server Facility User's Guide*.

The Systems Administrator

The Systems Administrator is responsible for the overall security and smooth running of a Manager Products installation.

ASG-ControlManager (herein called ControlManager) makes it possible to manage and control the information resources handled by Manager Products as a whole, as opposed to the management of individual elements such as dictionaries or projects within the installation.

In some installations the Systems Administrator is likely to act in other capacities as well, for example, as a project leader. But in larger installations, with the increasing complexity and importance of the corporate information resource, it is expected that a Systems Administrator will be appointed solely responsible for the system as a whole.

The exact tasks you must perform in person as Systems Administrator may vary considerably from organization to organization. They may, in many cases, be more wide-ranging than those discussed here. If your organization is relatively small, you may decide to perform all dictionary Controllers' functions yourself. ASG suggests that the following tasks are the responsibility of the Systems Administrator:

- Execution of the Manager Products start-up procedure, including:
  - Installation of Manager products software
  - Creation and initialization of the Manager Products Administrative and Information Dataset (MP-AID)
  - Creation of the Manager Products Administration Dictionary and installation of any ASG-SAVEd dictionaries required for maintenance of the MP-AID (the InfoDictionary, for example)
- Administration of the MP-AID
- Control of InfoSystem
- Assignment of Logon Identifiers and passwords to individual users.
- Specification of the Manager Products environment for individual users, via Logon Profiles
- Specification of the global environment (via Global Profiles and Installation macros) in which Manager Products are used
- Specification of Access Control levels to permit individual users to execute only certain MP-AID EXECUTIVE members (if both the Environmental Control Facility and the User-defined Commands facility are installed).

After installation of the Products most of your tasks are accomplished via use of the MP-AID. As the MP-AID is available to users of all the ASG dictionaries you have installed, you need to work closely with dictionary Controllers, who are responsible for user access, tailoring dictionaries, and applying standards in relation to one or more dictionaries.

For details of the MP-AID and its purpose refer to *ASG-ControlManager User's Guide*.

For details of the Controllers' responsibilities refer to *ASG-Manager Products Controller's Manual*.

You should be Controller of the Manager Products Administration Dictionary, which is provided for your private use. You define members in this dictionary and subsequently move them to the MP-AID, where they may support various capabilities provided by the MP-AID.

If User-defined InfoSystem is installed it is recommended that you maintain the ASG-supplied InfoDictionary within the Manager Products Administration Dictionary. However, if you decide to maintain a separate InfoDictionary, you should also be its Controller. Throughout the Systems Administrator's documentation, use of the term InfoDictionary refers either to a separately maintained dictionary or to the ASG-supplied dictionary which has been RESTORED into the Manager Products Administration Dictionary.

The Systems Administrator's Logon Identifier and password constitute the authority for acceptance of your own private commands and your variants of certain other commands. Your Logon Identifier and password are established when you create the MP-AID. Since the MP-AID CREATE command cannot therefore be subject to the same security of use as the other private commands, it is important that you do not permit the syntax of the command to be publicized. It is further recommended that you do not publicize your Logon Identifier or password. As an added measure of protection, you can also change your password from time to time using the MP-AID PASSWORD command.

For details of the InfoDictionary refer to *ASG-Manager Products User Defined InfoSystem*. For details of the MP-AID CREATE command refer to "Creating the MP-AID" on page 11.

The Manager Products Start-up Procedure

As Systems Administrator you are responsible for installing Manager Products software and performing the required initialization tasks. This procedure is recommended:

- Install the Manager Products software from the supplied tape, as described in the relevant product installation manual. A CMS version, if supplied, is also installed at this point.
- Tailor the installation macros to suit your own environment
- Create the MP-AID, thus establishing your private Logon Identifier and password. This must be done in batch (or another environment in which ControlManager logon is not mandatory). CMS users must create the MP-AID in line mode. This can be done by passing the parameter LINE when invoking Manager Products (see the relevant installation manuals). In subsequent runs, you will be able to log on to Manager Products as Systems Administrator.
- Log on to Manager Products in Update Mode (the MP-AID will be opened in Update Mode automatically by default) to perform the following functions:
  - Load the supplied InfoBank onto the MP-AID to provide online documentation of your installed Manager Products
  - Load the supplied EXECUTIVE members onto the MP-AID. These members are required if you wish to use the ControlManager Panel Driven Processing capability (see the *ASG-ControlManager User's Guide*).
  - Load the supplied translation rules onto the MP-AID (if DictionaryManager, DYR-TE08, is installed)
  - Execute any required MP-AID CONTROL commands
- Create the Manager Products Administration Dictionary
- Restore into the Manager Products Administration Dictionary any ASG saved dictionaries that depend upon the optional facilities purchased, such as the InfoDictionary and the UDS Table Dictionary
- Restore the Manager Products DEMO Dictionary
- Assign Logon Identifiers and passwords to users by entering LOGON-PROFILE members in the Manager Products Administration Dictionary and transferring them, via the CONSTRUCT command, to the MP-AID.
- Install any non-CMS interactive versions of your Manager products software.

Except where otherwise indicated, the above procedure can be carried out using Manager Products dictionary handling and ControlManager Nucleus facilities. It is recommended that dictionary creation and any subsequent restoration processing be carried out in batch. This is essential for dictionaries which are to be used exclusively in a CICS environment.

For details of Installing Manager Products refer to Chapter 2, "Installing Manager Products," on page 7. For details of creating the MP-AID refer to "Creating the MP-AID" on page 11. For details of the CONSTRUCT command refer to "Constructing MP-AID Members" on page 41. For details of the Logon procedures refer to "The Logon Procedure" on page 23.

Managing the MP-AID

Administration of the MP-AID falls into three broad categories:

- Updating the MP-AID
- Interrogating the MP-AID
- Housekeeping functions

MP-AID updating, in turn, can further be subdivided as follows:

- Adding and replacing MP-AID members. The various methods of performing this function are discussed in Chapter 5, "Updating the MP-AID," on page 35.
- Deleting and resetting MP-AID members, discussed in Chapter 5, "Updating the MP-AID," on page 35.

MP-AID interrogation is described in Chapter 6, "Interrogating the MP-AID," on page 53 and includes:

- Listing members
- Displaying members of certain types
- Summarizing the MP-AID content (using the MP-AID STATUS command)

MP-AID housekeeping functions are primarily concerned with the tasks required for taking backups of the MP-AID or subsets of the MP-AID according to member type. These tasks and the associated commands are described in Chapter 7, "MP-AID Backup, Reconfiguration, and Copying," on page 85.

2 Installing Manager Products

The Systems Administrator is responsible for the successful installation of Manager Products. Systems programmers and dictionary Controllers may also be called upon to assist the installation of Manager Products. Detailed descriptions of the relevant procedures can be found in the relevant Manager Products installation manual:

- *ASG-Manager Products Installation in OS Environments*
- *ASG-Manager Products Installation in DOS Environments*
- *ASG-Manager Products Installation in CMS Environments*

For the sake of brevity, these manuals will subsequently be referred to collectively as the Manager Products installation manuals, and you are directed to the manual appropriate for your particular environment.

In the list of selectable units ordered, a DELIVERED date (year and quarter) is stated against each such unit that is usable; units that cannot yet be used are annotated NOT YET AVAILABLE. If a DELIVERED date is a date in the future, it means that the selectable unit can be used, but that it either is at a trial stage, or is a unit that is and will continue to be provided to existing users, but after the stated date may be chargeable to new users.

Prior to the cutting of your installation tape, the command:

```
ENVIRONMENT CUST;
```

is issued. This command produces a list of the Manager Products supplied on your installation tape together with all selectable units supplied. A copy of the output from this command accompanies the installation tape and should be checked immediately on receipt to ascertain that all required Manager Products selectable units appear in the list. Any errors or omissions should be notified without delay to your Manager Product Supplier.

In the event of any query arising subsequent to installation, a copy of this list, which you can reproduce by issuing the command:

```
ENVIRONMENT ALL;
```

should accompany the query.

Whether the installation of Manager Products is performed by yourself as Systems Administrator, or by dictionary Controllers, systems programmers, or operations staff, you should become familiar with the contents of the installation manuals. After physical installation of the product, all the necessary job control procedures for its running should be set up. You should ensure particularly that job control for any runs that include Systems Administrator's or Controller's private commands will be readily available when required.

You must be logged on as the Systems Administrator in order to use the MP-AID CONTROL command successfully. You must have accessed a dictionary using the master (Controller's) password in order to use the other CONTROL commands successfully.

Before bringing Manager Products into use, you should determine whether they are to be implemented exactly as supplied, or whether any of the system's variables are to be altered to suit the requirements of the particular user environment. The products can be tailored in many respects to suit local needs, by means of installation macros that are supplied with the products. Other means of tailoring Manager Products are available via the SET commands subsequent to installation.

If the supplied default values of all the keywords listed in a given installation macro's specification are acceptable, no action need be taken in respect to that macro. If, however, any values are to be changed, the macro must be submitted to the Assembler, with required values declared for those keywords whose values are to be changed. The Assembler output must then be linkage edited to produce a load module. The products can be installed as supplied for familiarization, and tailored to the requirements of the user environment at any time subsequently. You can re-tailor an installation macro at any time. It should be noted that any such re-tailoring is of the macros as supplied by ASG, not of the macros as last tailored.

The installation macros that can be used to tailor the basic modules of the product are documented in the installation manual for your particular environment. Installation macros for tailoring optional additional facilities are documented in the appropriate facility manuals.

One of the macros listed in the table, DCUST, provides the ability to predetermine the number of input/output buffers used. The number of buffers can be determined individually for the source, data entries, and index datasets. DCUST is documented in the Installation manuals where the effects of increasing the number of input/output buffers are also discussed. The number of buffers specified by DCUST can be overridden at run time by including the SBUF, DBUF, and IBUF clauses in the DICTIONARY command, to specify the number of buffers for the source, data entries, and index datasets respectively. The numbers of buffers used (under OS, DOS, CMS, and Siemens BS2000) affects the main storage requirement. The minimum region size for running Manager Products can be ascertained from the appropriate installation manual.

Documentation regarding the protection of Manager Products dictionaries and the MP-AID against concurrent updating is provided in the installation manuals.

Commands are provided that enable you to initiate and/or terminate protection against the concurrent updating of the MP-AID and dictionaries.

In OS environments the relevant commands are:

- `MP-AID CONTROL RESERVE`
- `CONTROL RESERVE`

For details of the CONTROL RESERVE command refer to *ASG-Manager Products Installation in OS Environments*.

For details of the MP-AID CONTROL RESERVE command refer to "SET Commands that Affect Command Syntax and Availability" on page 110.

In CMS environments these are the relevant commands:

- `MP-AID CONTROL CMS`
- `CONTROL CMS`

For details of the CONTROL CMS command refer to *ASG-Manager Products Installation in CMS Environments*.

For details of the MP-AID CONTROL CMS command refer to "Introduction" on page 108.

You must be logged on as the Systems Administrator in order to use the MP-AID CONTROL command successfully. You must have accessed a dictionary using the master (Controller's) password in order to use the other CONTROL commands successfully.

For details of the SET commands refer to Chapter 6, "Interrogating the MP-AID," on page 53.

3 Creating the MP-AID and Administration Dictionary

This chapter includes these sections:

The MP-AID 11
Creating the MP-AID 11
Initializing the MP-AID 13
Concatenated MP-AIDs 13

The Manager Products Administration Dictionary. 17
Overview 17
The Manager Products Administration Dictionary Member Types 17
Creating the Manager Products Administration Dictionary 18
Access and Security Considerations 19

The MP-AID

Creating the MP-AID

The MP-AID consists of a single dataset. Once you have completed the first stage of the installation process (that is, to copy the ASG-supplied basic software datasets to disk), you must create an MP-AID dataset for your Manager Products installation.

Both BDAM and VSAM MP-AIDs are supported by ControlManager except in CMS environments where only BDAM is supported (refer to your installation manual for further details).

In MVS or OS/390 environments you can create a Data-in-Virtual (DIV) MPAID for use under the Manager Products Server Facility (MPSF). Please refer to the *ASG-Manager Products Server Facility User's Guide* for complete information.

You must execute the MP-AID CREATE command in the first Manager Products run in order to allocate the necessary storage space for the MP-AID dataset and to establish the Systems Administrator's credentials (Logon Identifier and password).

If you are intending to use Manager Products under CMS you must create the MP-AID in line mode. This is done by passing the parameter LINE when invoking ControlManager.

This is the syntax for the MP-AID CREATE command:

```
MP-AID CREATE credentials blocksizes;
```

where:

credentials represents the specification of the System Administrator's Logon Identifier and Password.

blocksizes represents the specification for both logical and physical blocksizes for the new MP-AID.

The size of the MP-AID dataset is defined using the job control language which is appropriate to your environment.

MP-AID CREATE Logon Credentials

When creating an MP-AID it is necessary for you to specify the Logon Identifier and Password for subsequent use by the Systems Administrator. To do this you must include these clauses with the MP-AID CREATE command:

```
ADMINISTRATOR logon-identifier PASSWORD password;
```

where *logon-identifier* and *password* are (delimited or undelimited) names of no more than 10 characters and 8 characters, respectively.

You will be able to use restricted Systems Administrator commands only if you are successfully logged on with the password and Logon Identifier of the Systems Administrator. For security reasons, after the MP-AID has been created you can change your password by using the MP-AID PASSWORD command.

MP-AID CREATE Blocksize Specification

You must define the Logical and Physical Blocksize specification for the MP-AID dataset by entering these clauses:

```
LOGICAL-BLOCKSIZE nnnnn PHYSICAL-BLOCKSIZE nnnnn
```

where *nnnnn* is an integer specifying a logical or physical blocksize. There is no default supplied for either value.

For all environments, the logical and physical blocksize must be in the range 600 to 32760 bytes where the physical blocksize must be greater than or equal to the logical blocksize although in practice the physical blocksize will be a multiple of the logical blocksize. The blocking of logical records within physical records reduces the number of physical I/O to the MP-AID dataset and so enhances performance. The physical blocksize for CMS is subject to further restrictions as described below.

For OS, ASG recommends that for a 3380 disk, you use half-track blocking with a physical blocksize of 23476 bytes. For CMS, with a BDAM MP-AID intended for concurrent use by two or more CMS users, the physical blocksize must be specified as a multiple of 800 or a multiple of 1024 and the MP-AID must reside on a mini-disk formatted with a blocksize of 800 or a multiple of 1024 with a filemode of A6. ASG recommends that for a 3380 disk, you format the CMS mini-disk to 4096 bytes and you use a physical blocksize of 8192 or 20480 bytes.

For all environments, ASG recommends that you use a logical blocksize of about 1000 bytes and adjust as necessary. You may use the MP-AID ANALYSE command to help you choose an optimum logical blocksize for performance tuning your MP-AID.

Initializing the MP-AID

Once you have successfully created the MP-AID you should submit a second ControlManager run, logging on with your Logon Identifier and password, to LOAD the MP-AID with ASG-supplied INFOBANK and EXECUTIVE members. This is also a convenient time to enter the command/s used to initiate, terminate, or vary the protection against concurrent updating provided for the MP-AID.

The commands used are: MP-AID CONTROL RESERVE and (in CMS environments) MP-AID CONTROL CMS.

Refer to Chapter 8, "Miscellaneous Commands," on page 99 for details of the MP-AID CONTROL command.

To load the ASG-supplied INFOBANK and EXECUTIVE members, enter:

```
LOGON logon-id PASSWORD password;
MP-AID LOAD INFOBANK EXECUTIVES;
```

If you have export to IDD functions, then a number of predefined TRANSLATION-RULEs are also supplied and should be loaded.

Concatenated MP-AIDs

Introduction

You can have read-only access to one or more MP-AIDs, as well as read/write access to your normal MP-AID, by concatenating MP-AIDs. You can concatenate up to 255 MP-AIDs, in a specified search order. You can also enable general users to have access to read-only MP-AIDs.

The *primary* MP-AID is the MP-AID to which you normally have (read/write) access. A *secondary* MP-AID is another, read-only MP-AID. To define access to secondary MP-AIDs, use:

- The MP-AID CONCATENATION command
- For each MP-AID, definition statements in the Job Control Language/execution procedure you use to invoke Manager Products.

Refer to your installation manual for details of the definition statements needed.

To enable general users to have access to secondary MP-AIDs, enter the appropriate MP-AID CONCATENATION commands in a Logon Profile or Corporate Executive Routine.

You can access members on secondary MP-AIDs:

- Implicitly, directly accessing members on secondary MP-AIDs, without explicitly stating on which MP-AID they are stored.
- Explicitly, interrogating named members on named secondary MP-AIDs, using variants of the standard MP-AID interrogation commands.

Refer to "Implicit Access to Members on Secondary MP-AIDs" on page 15 and "Explicit Access to Members on Secondary MP-AIDs" on page 15 for details of implicit and explicit access.

MP-AIDs which are accessed as secondary (read-only) MP-AIDs should not also be concurrently available for access as primary (read/write) MP-AIDs.

If data on a primary MP-AID is being modified, and the MP-AID is also in use as a secondary MP-AID, users accessing that MP-AID as a secondary MP-AID may encounter unpredictable results.

ASG therefore recommends that any modifications to data held on secondary MP-AIDs be done by the Systems Administrator, at a time when no other users will access that MP-AID.

Notes

1. You can concatenate MP-AIDs with different access methods (that is, BDAM/VSAM).
2. You can have different physical and logical blocksizes for different MP-AIDs.
3. A separate buffer pool is created for each MP-AID. The MP-AID BUFFERS command controls the size of each buffer pool.
4. Whenever you use the MP-AID CONCATENATION command, any in-core indexes for USER-MEMBERs, COMMAND, EXECUTIVE, or INFOBANK members are deleted.

Implicit Access to Members on Secondary MP-AIDs

You can implicitly access members that are not owned by any user. You can implicitly access these member types held on secondary MP-AIDs:

- COMMAND members, to run standard Manager Products commands
- EXECUTIVE members, to run Executive Routines
- INFOBANK-PANEL members, using InfoBank interrogation commands (for example, the PANEL command)
- UDS-TABLE, UDS-COMPARISON-TABLE, TRANSLATION-RULE, and FORMAT members.

For example, to run an Executive Routine named CALC, held on any primary or secondary MP-AID, simply enter:

```
CALC;
```

or, to access an InfoBank panel named DYRCOM0600, held on any primary or secondary MP-AID, simply enter:

```
PAN DYRCOM0600;
```

Explicit Access to Members on Secondary MP-AIDs

You can explicitly access the following, held on a secondary MP-AID:

- Any members that can be implicitly accessed (such as EXECUTIVE members)
- USER-MEMBERs, KEPT-DATA, TRANSIENT, WORKBENCH and PROFILE members, owned by a particular user.

using the CONCATENATION clause with standard MP-AID interrogation commands (such as MP-AID PRINT). By default (if the CONCATENATION clause is omitted), all MP-AID interrogation commands access the primary MP-AID.

For example, to print the EXECUTIVE member CALC-2, held on a secondary MP-AID with the logical name PROD1, enter:

```
MP-AID PRINT CONCATENATION PROD1 EXECUTIVE CALC-2;
```

You can also use MP-AID interrogation commands to access a named member held on any primary or secondary MP-AID.

For example, if you did not know the secondary MP-AID on which the above member was held, you could still print it, by entering:

```
MP-AID PRINT ANY-CONCATENATION CALC-2;
```

Refer to Chapter 6, "Interrogating the MP-AID," on page 53 for details of the MP-AID interrogation commands and their variants.

Using MP-AID Concatenation

One of the main uses of MP-AID concatenation is for configuration management.

For example, you may use a central MP-AID for your production environment, and a different MP-AID for each development environment. Users working in a development environment can access data (such as InfoBank panels), or run routines held on a central MP-AID, accessed as a secondary MP-AID.

You could establish multiple production MP-AIDs, for:

- InfoBank panels
- COMMAND members/Corporate Executive Routines
- UDS tables.

You can manage your data more efficiently if you already have several MP-AIDs, by removing duplication of data across multiple MP-AIDs, and so reducing disk storage overheads.

Searching MP-AIDs in a Specified Order

When you use the MP-AID CONCATENATION command to define MP-AID concatenation, you set up a *search order*. This is the order in which the primary and secondary MP-AIDs are searched if you explicitly access an MP-AID member without specifying the MP-AID from which that member is to be accessed. This is also the order in which MP-AIDs are searched when accessing a member implicitly.

The search order is determined by the sequence in which you enter the logical names of MP-AIDs in the MP-AID CONCATENATION command.

The MP-AIDs are searched in the specified order for the named member. The first occurrence of this member is accessed. You should keep track of members with identical names, to ensure that you access the one you want.

For example, suppose you want to run an Executive Routine, which exists as two different members on two secondary MP-AIDs, with logical names PROD1 and BACKUP. The member held on BACKUP is an older version of the member on PROD1.

To run the newer version, you should therefore specify PROD1 before BACKUP in the MP-AID CONCATENATION command, so that PROD1 occurs before BACKUP in the search order.

You can alter the search order dynamically at any time during a Manager Products session, by entering a new MP-AID CONCATENATION command.

The Manager Products Administration Dictionary

Overview

The Manager Products Administration dictionary is the private resource of the Systems Administrator in performing the essential function of maintaining the MP-AID. The dictionary is set up by the Systems Administrator in conjunction with the MP-AID for systems administration, access control, and tailoring of user-definable facilities.

Several MP-AID member types (each relating to various MP-AID functions) are defined in the Administration dictionary before being constructed on to the MP-AID where they serve their particular purpose. If such members need to be changed they are updated in the Administration dictionary and then replaced on the MP-AID.

For example, Logon Profiles, which are used to control access to ControlManager, are set up as members of the Administration dictionary before being constructed on to the MP-AID by the Systems Administrator.

As a minimum ControlManager Nucleus function, the Manager Products Administration Dictionary is used to define and store LOGON-PROFILE members and the Universal GLOBAL-PROFILE member, before placing them in the MP-AID.

Member types relate to selectable units available at your installation.

The Manager Products Administration Dictionary Member Types

The Administration dictionary may contain these member types, each corresponding to an MP-AID member type dependant upon the installation of the required Manager Products selectable units.

- LOGON-PROFILE
- GLOBAL-PROFILE
- INFOBANK-PANEL
- FORMAT
- EXECUTIVE-ROUTINE
- HIERARCHY
- TRANSLATION-RULE

Creating the Manager Products Administration Dictionary

After creating the MP-AID the next task for a Systems Administrator is to create the Administration dictionary and restore the ASG-supplied dictionaries. You use the Manager Products Administration Dictionary to record dictionary member types which can be constructed onto the MP-AID by means of the CONSTRUCT command.

The ASG-supplied dictionaries that you receive depend on the Manager Products that you have purchased. These are the dictionaries supplied:

- The DEMO dictionary
- The InfoDictionary, if you have the ControlManager User Defined InfoSystem facility installed
- The UDS Table Dictionary, if you have the ControlManager User Defined Syntax facility installed
- The User Interface Dictionary if you have the ControlManager User Interface facility and/or the DictionaryManager User Defined Output facility installed
- The TRANSLATION-RULE Dictionary for use with DictionaryManagers Corporate Dictionary Export for IDD facility.

Refer to your Manager Products installation manual for details of the ASG-supplied dictionaries.

In general, it is recommended that all member types that are constructed to the MP-AID be kept in the Manager Products Administration Dictionary. However, you may feel, perhaps for reasons of security, or for storage considerations, that certain types should be kept in separate dictionaries.

For example, if the User Defined InfoSystem facility is installed, you can either restore the ASG-supplied InfoDictionary into the Manager Products Administration Dictionary or into a separately created InfoDictionary.

In any event, you should be the Controller of each of the dictionaries created.

All of the above functions are described in *ASG-Manager Products Controller's Manual*.

Access and Security Considerations

If the User-defined InfoSystem facility is installed, you may allow certain users to have update access to the Manager Products Administration dictionary so that they can enter new or altered INFOBANK-PANEL members, which you will CONSTRUCT to the MP-AID. Similarly, if the User-defined Syntax (UDS) facility is installed, you may permit Designated Controllers to enter commands to add/remove UDS-related dictionary members and CONSTRUCT them to the MP-AID.

For whatever reason you may decide to grant access to your own dictionaries, you will want to protect many of your dictionary members from scrutiny or updating. This will be particularly true in the case of LOGON-PROFILE members because of their highly sensitive content. There are a number of ways in which you can provide protection, depending upon the optional facilities you have installed. Three of these are described briefly in the following paragraphs.

If you have the Audit and Security facility (selectable unit CMR-DD3) installed, you can protect any member you wish from either read and/or update access by any user other than yourself. You can provide a user with access to some dictionaries as required by using the SECURITY command. Refer to *ASG-Manager Products Controller's Manual* for details of the OWNER and SECURITY commands.

If you allow users access to your dictionary then they could add new LOGON-PROFILE members (if they were familiar with the syntax), but they would have no utility unless you CONSTRUCTed them over to the MP-AID.

If the Systems Administrator's Environmental Control Facility is installed and a ControlManager Status facility (selectable unit CMR-DD2 or CMR-AD21) is installed, you can provide security by making sure that a user, when entering your dictionary, is forced into a dictionary status different from those statuses which contain any members you wish to protect. At the same time you would disable the STATUS command in the user's Logon Profile, thus preventing the user from switching to another status.

If the above facilities are not available, you could create separate dictionaries for Profiles and UDS Table members. Then you can provide a user with access to some dictionaries, as required, but not to others.

4 Logging On to Manager Products

This chapter includes these sections:

Logon Overview **21**
The LOGON Command 22
The Logon Exit 22
The Autolog Procedure 22

The Logon Procedure **23**

The LOGON Command **24**

Logon and Global Profiles **25**
Overview 25
Logon Profiles 26
The LOGON-PROFILE Dictionary Member Type Syntax 27
Global Profiles 28
The GLOBAL-PROFILE Dictionary Member Type Syntax 29
Logon Profiles for Controllers 30

The Autolog Procedure **32**

Limit to the Number of Logon Attempts **33**

Logon Overview

In order to utilize the functionality of Manager Products, whether online, in batch, or through an access call from a User Interface program, a user must first log on to Manager Products. A user may log on to Manager Products in one of these ways:

- By using the LOGON command
- By using the Logon Exit
- By invoking the default Autolog procedure

The LOGON Command

The LOGON command requires specification of the user's Logon Identifier and password, which must be specified previously by you in an MP-AID Logon Profile. However, users may change their password subsequently, by use of the MP-AID PASSWORD command. In CICS, CMS, TSO, or Siemens Timesharing Interface environments, a formatted Logon Panel is provided in which only the Logon ID and password is entered. A Logon Profile can invoke one or more Global Profiles. Commands common to two or more Logon Profiles can be included in a Global Profile. If the LOGON command is not entered then the Autolog Procedure is invoked; see "The Autolog Procedure" on page 22.

For details of Global Profiles refer to "Logon and Global Profiles" on page 25 and for details of the Autolog procedure refer to "The Autolog Procedure" on page 32.

The Logon Exit

In all environments where the Systems Administrator's Environmental Control Facility (selectable unit CMR-SC05) is installed, a tailorable Logon Exit is available which may be used to provide additional logon processing such as further validation. In full-screen interactive environments (CICS, CMS, TSO or Siemens Timesharing Interface) the Logon Exit may also be used to permit users to log on automatically by bypassing the Logon Panel. Further, the Logon Exit feature may be used to control access to Manager Products. For example, it can limit low priority users accessing Manager Products at a particular time of day or limit users to accessing Manager Products from particular interactive environments.

For details of Logon Exit refer to *ASG-Manager Products Systems Administrator's Environmental Control Facility*.

The Autolog Procedure

In pseudo-interactive and in batch environments where the LOGON command is optional, ControlManager automatically invokes an Autolog procedure if the first command entered is not the LOGON command (or one of the few commands which do not, in this circumstance, invoke the Autolog procedure).

For details of the few commands refer to "The Autolog Procedure" on page 32.

The Autolog procedure does not require that a Logon Profile exist but does invoke Global Profiles, GLOBAL0000, and GLOBALAUTO if they are present on the MP-AID.

The global profiles can either prevent the user accessing Manager Products altogether or can tailor the functions that can be performed by the user.

The Logon Procedure

Except in the case of the Systems Administrator, logging on to Manager Products via the LOGON command, formatted Logon Panel or Logon Exit, requires that a Logon Profile exists as a PROFILE member of the MP-AID. (The Systems Administrator's Identifier and password are established when the MP-AID is created using the MP-AID CREATE command.)

When a user other than the Systems Administrator logs on, the Logon procedure consists of these steps:

- The user's Logon Profile is examined and (in all environments except when Logon is via the Autolog procedure):
  - — If the Logon Profile is defined as EXCLUSIVE, a Logon flag is set up. The flag is unset by normal termination. When the flag is set no other user can log on using that Logon Profile.
  - — If the Logon Profile is defined as SHARED, a Logon counter, initially set to zero, is incremented by one each time a user logs on (using that Logon ID and password). Normal termination causes the counter to be decremented by one.
- If the Universal Global Profile GLOBAL0000 exists (as a PROFILE member of the MP-AID), it is invoked and any command it contains are executed.

The *Logon flag* and *Logon counter* allows you, as the Systems Administrator, to determine who is currently using Manager Products, if you use the QUERY ON-LINE command. Output from an MP-AID LIST PROFILES command gives the total number of times each Profile member has been successfully invoked.

When you log on as Systems Administrator, your Logon Identifier and password are verified but no Logon flag is set or counter incremented. GLOBAL0000, if it exists as a Global Profile on the MP-AID, is invoked unless you have specified the keyword NO-PROFILE in the LOGON command.

For details of Global Profiles refer to "Logon and Global Profiles" on page 25.

The LOGON Command

The LOGON command is mandatory via a Logon Panel in CICS, TSO, CMS, and Siemens Timesharing Interface environments, unless the Logon Exit is available and implemented to provide automatic logon. The command is optional in batch and in other online environments (except IMS/DC, where it is disallowed). When omitted or disallowed, the Autolog procedure is invoked.

When logon is via the Logon Panel the user is only required to enter a Logon Identifier and password, in the appropriate input fields. In all other circumstances, the LOGON command must be given in full.

This is the syntax of the LOGON command:

```
>>──LOGON logon-identifier──────PASSWORD password──────────────────────────>
>──┬─NO-PROFILE─┬──┬─UPDATE-MPAID─┬──┬─RECONNECT─┬──────────────────────────>
  │            │  │              │  │           │
>──┴─MPAID-DDNAME ddname─┴──────────────────────────┬─;─┬──────────────────────>
                                                    └─.─┘
```

where *logon-identifier*, *password*, and *ddname* are subject to rules governing names.

NO-PROFILE suppresses the execution of the Global Profile, GLOBAL0000 and, if the Systems Administrator's Environmental Control Facility and the Extended Interactive Facility are installed, the execution of a User-defined Profile. This is available to the Systems Administrator only.

UPDATE-MPAID will open the MP-AID in update mode. The MP-AID is opened in read/write mode for all users in all environments (except when using the Autolog procedure, when it is opened read only). UPDATE-MPAID is used if DCUST has been tailored with UPDATE-MPAID set to NO. This is available to the Systems Administrator only.

MPAID-DDNAME *ddname* allows the Systems Administrator to change the default primary MP-AID ddname. By default this is MPAID. *ddname* represents the ddname to be used when accessing the primary MP-AID. When a new MP-AID ddname is given, the ddname MPAID ceases to have any special significance and any dataset allocated with that ddname is regarded as a secondary MP-AID. This clause allows a secondary MP-AID to be accessed as the primary MP-AID without execution of differing JCL/exec streams. All other conditions necessary for a successful logon, such as the presence of a user member on the primary MP-AID remain.

RECONNECT enables a user with an Exclusive Logon Profile to log on after the previous Manager Products session terminated abnormally, for example with an abend. Under these circumstances, the Logon flag will not have been unset as it would be by normal termination, and without the RECONNECT facility the user would be prevented from logging on again until the Logon Profile is reset by the Systems Administrator. This option is available to all users with Exclusive Profiles. For this reason, it is essential that knowledge of exclusive logon details is restricted to only the user owning that profile, otherwise other users could log on with those details and override the normal security on exclusive logons.

For example, a user with Logon Identifier BILL and password FRED would enter:

```
LOGON BILL PASSWORD FRED;
```

If logon were via the formatted panel, the user would simply enter `BILL` and `FRED` into the appropriate fields.

Users can change their own password using the MP-AID PASSWORD command. If you have Logon Exit and have it implemented to provide automatic logon, bypassing the user's Logon Identifier and password, the effect of a user changing his or her password may prevent that user being logged on automatically.

For details of rules governing names refer to *ASG-ControlManager User's Guide*. For details of the MP-AID PASSWORD command refer to "The MP-AID PASSWORD Command" on page 104.

For details of the Logon Exit and User Defined Profiles refer to *ASG-Manager Products Systems Administrator's Environmental Control Facility*.

Logon and Global Profiles

Overview

There are two types of Profile: Logon Profile and Global Profile. With the ControlManager Nucleus, a Logon Profile is used to establish logon credentials for individual and/or groups of users. The Logon Profile is invoked when a user logs on via the LOGON command, the Logon Panel, or Logon Exit. As Systems Administrator, you do not require a Logon Profile because you establish your credentials when you create the MP-AID. If the Systems Administrator's Control Facility (selectable unit CMR-SC05) is installed, commands can be included in the Logon Profile (DICTIONARY and AUTHORITY commands, for example).

If you create a Global Profile, GLOBAL0000, on the MP-AID, it is invoked automatically during the logon process for all users. By including Manager Products commands in GLOBAL0000, particularly variants of the SET command, you can establish a common environment for all users.

If both the Extended Interactive Facility (selectable unit CMR-FE01) and the Systems Administrator's Environmental Control Facility are installed, users can create their own User-defined Profiles. This involves setting up a USER-MEMBER on the MP-AID with the same name as the user's Logon Identifier and can contain any commands normally available to the user.

For details of Logon Profiles refer to "Logon Profiles" on page 26 and for details of Global Profiles refer to "Global Profiles" on page 28.

Logon Profiles

Logon Profiles are created as LOGON-PROFILE members of the Manager Products Administration Dictionary and are constructed on to the MP-AID. As a minimum requirement, a Logon Profile establishes a user's credentials to log on to Manager Products. In addition, you may specify:

- The name under which the Logon Identifier is to be stored on the MP-AID.
- Whether the Logon Profile is to be *shared* or *exclusive*.
- Whether a user logging on with these credentials is a Designated Controller.

A Logon Profile can be exclusive or shared. An exclusive Logon Profile allows one user to log on. In this instance a Logon flag is set. A shared Logon Profile allows a number of users to log on concurrently using the same Logon Identifier and password. In this instance a Logon counter is incremented.

You can establish a user as a Designated Controller by including the keyword CONTROLLER in the Logon Profile. This enables the user to execute a subset of restricted User Defined Syntax (selectable unit CMR-UD1) related commands and to read all InfoBank panels normally restricted to dictionary Controllers.

For details of a Designated Controller refer to "Logon Profiles for Controllers" on page 30 and for the syntax of a LOGON-PROFILE dictionary member refer to "The LOGON-PROFILE Dictionary Member Type Syntax" on page 27.

If the Systems Administrator's Environmental Control Facility (selectable unit CMR-SC05) is installed, Manager Product commands may be specified in the Logon Profile, for example to tailor the environment to the particular requirements of the user. Both Manager Products commands available to the user and SET commands restricted to the Systems Administrator can be included in the Logon Profile.

For example, to define an exclusive Logon Profile with password FRED and Logon Identifier BILL, you would add this LOGON-PROFILE member to the dictionary with the member name BILL:

```
LOGON-PROFILE
PASSWORD FRED
LOGON EXCLUSIVE
;
```

To define BILL as a shared Logon Profile rather than exclusive, you would replace the keyword EXCLUSIVE with the keyword SHARED or omit the LOGON clause completely. If omitted a default of SHARED is assumed.

To identify BILL as a Designated Controller, you would include the keyword CONTROLLER immediately after the LOGON clause.

The names of members of the MP-AID are limited to 10 characters whereas the names of dictionary members can be a maximum of 32 characters. If the name of the Logon Profile is longer than 10 characters, you must specify an IDENTITY clause before the member is constructed to the MP-AID.

Following on from the above example, enter:

```
IDENTITY FIONA
```

immediately after the PASSWORD clause. When you CONSTRUCT the dictionary member BILL over to the MP-AID, the member is given the identity name. Therefore, an intended user would have to log on as FIONA in the LOGON command instead of BILL.

The LOGON-PROFILE Dictionary Member Type Syntax

The clauses below the dotted line are effective only if the Systems Administrator's Environmental Control Facility is installed. If the facility is not installed, they may be included in the definition of a LOGON-PROFILE but in that case they have no effect.

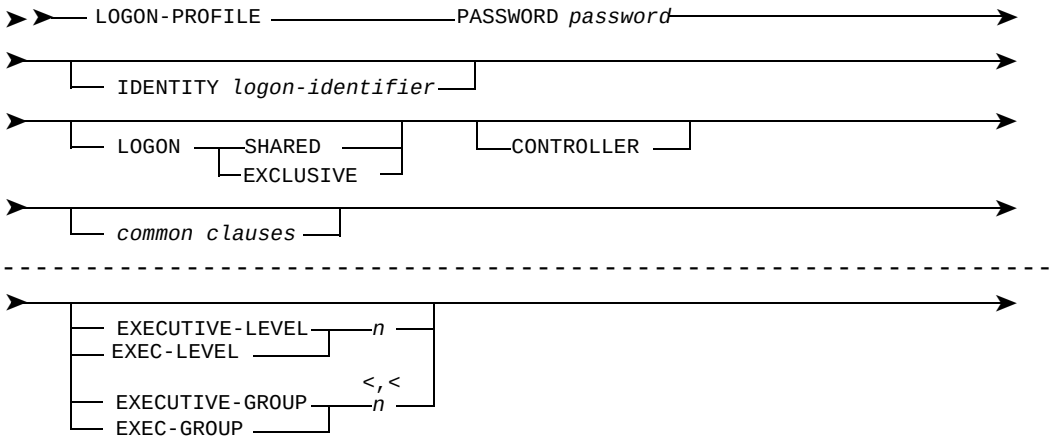

```
►──┬─ ONLINE-GLOBAL global-profile-name ─┬──────────────────────────►
   │                                     │
►──┬─ BATCH-GLOBAL global-profile-name ──┬──────────────────────────►
   │                                     │
►──┬─ COMMON-GLOBAL global-profile-name ─┬──────────────────────────►
   │                                     │
►──┬──────────────────────────────────────┬──────────────────────────►
   │              <<<<<<<                 │
   └─ CONTENTS command ───────────────────┘
►──┬─ ; ─┬──────────────────────────────────────────────────────────►
   └─ . ─┘
```

where:

password and *logon-identifier* conform to the rules appearing in the MP-AID CREATE command syntax (see "Creating the MP-AID" on page 11)

common-clauses are described in the *ASG-Manager Products Dictionary/Repository User's Guide*, and the Basic Dictionary Management Software manual

n must be in the range 0 to 255

global-profile-name is inserted in the dictionary as a dummy GLOBAL-PROFILE if it does not already exist. If the name refers to a dictionary member that is not a GLOBAL-PROFILE, an encoding error occurs.

command is any permissible Manager Products command available at your installation. Each command must be on a separate line and terminated by a terminator. The commands must be entered in upper-case characters.

Except for variants of the SET command (which are permissible), no private command of the Systems Administrator or a (Host, Guest, or Designated) Controller is executable from a Global Profile unless the user is logged on as the Systems Administrator or a (Host, Guest, or Designated) Controller.

If no LOGON clause is specified, a default LOGON SHARED clause is assumed.

Global Profiles

Global Profiles are created as GLOBAL-PROFILE members on the Manager Products Administration Dictionary, and are constructed on to the MP-AID. A Global Profile can contain any of the commands permitted in a Logon Profile. Commands common to two or more Logon Profiles can be included in a Global Profile rather than being repeated in each Logon Profile. A typical use of Global Profiles is to establish a common environment for a group of users such as the members of a department.

If the Systems Administrator's Environmental Control Facility (selectable unit CMR-SC05) is installed, as Global Profile may be invoked via the Logon Profile:

- As a COMMON-GLOBAL, in which case the Global Profile is executed whatever the environment in which the user logs on
- As an ONLINE-GLOBAL, in which case the commands in the Global Profile are executed only when the user logs on in online mode (fully interactive and pseudo-interactive environments)
- As a BATCH-GLOBAL, in which case the commands in the Global Profile are executed only when the user logs on in batch mode.

Therefore, you can establish different environments for the same profile depending on whether the user is logging on in online or batch mode.

In addition, if you add a GLOBAL PROFILE member to the MP-AID named GLOBAL0000, it will be invoked automatically during the logon process for all users (including yourself unless you log on specifying the keyword NO-PROFILE).

You can include many ControlManager and other Manager Products commands in the Global Profile. Except for ControlManager SET commands (used to establish environmental parameters for the session), no private commands of the Systems Administrator or a Controller are executable from a Global Profile unless the user is logged on as the Systems Administrator or a Controller.

Possible uses of Global Profiles are to:

- Route the user to the correct dictionary in a multiple dictionary environment
- Limit the commands available to certain groups of users
- Establish interactive defaults such as PF key settings.

For details of COMMON-GLOBAL, ONLINE-GLOBAL, and BATCH-GLOBAL refer to *ASG-Manager Products Systems Administrator's Environmental Control Facility*.

The GLOBAL-PROFILE Dictionary Member Type Syntax

```
>>── GLOBAL-PROFILE ──────────────────────────────────────────────>
                   └─common-clauses─┘
                <<<<<<<
>──────CONTENTS command ──────────────────────;──────────────────>◄
                                              └─.─┘
```

where:

`common-clauses` are described in the *ASG-Manager Products Dictionary/Repository User's Guide*

`command` is any permissible Manager Products command available at your installation.

Except for variants of the SET command (which are permissible), no private command of the Systems Administrator or a (Host, Guest, or Designated) Controller is executable for a Global Profile unless the user is logged on as the Systems Administrator or a (Host, Guest, or Designated) Controller.

Logon Profiles for Controllers

The optional keyword CONTROLLER is provided for use in Logon Profiles to enable you to:

- Control which users may execute the CREATE and RELOAD commands
- Control which users may access InfoBank panels normally restricted to Controllers
- Allow particular users to execute a subset of User Defined Syntax (selectable unit CMR-UD1) related commands normally restricted to dictionary Controllers.

A Controller is one of these types:

Dictionary Controller (also known as a Host Controller). A user who can open a dictionary using the master password established when the dictionary was created (see the CREATE command specifications in *ASG-Manager Products Controller's Manual*).

A Dictionary Controller can access InfoBank panels restricted to Controllers and execute all Controllers' commands except for CREATE and RELOAD. To execute these commands you have to be a Designated Controller.

Refer to *ASG-Manager Products Controller's Manual* for details of the CREATE and RELOAD command.

Designated Controller. Is a user whose Logon Profile contains the CONTROLLER keyword. A Designated Controller can execute the following commands at any time, whether or not a dictionary has been opened:

- MP-AID LIST UDS-TABLES
- MP-AID LIST UDS-COMPARISON-TABLES
- CREATE
- RELOAD

A Designated Controller can access InfoBank panels restricted to Controllers.

The functions of a Designated Controller and Guest Controller overlap. They are relevant to whether certain UDS-related commands can be executed and under what circumstances.

Guest Controller. Is a Designated Controller who has opened a dictionary using a password other than the master password. If the UDS facility is installed, a Guest Controller can execute these commands:

- CONSTRUCT UDS-TABLE
- COMPARE UDS
- SHOW UDS TABLE
- MP-AID LIST UDS TABLES
- MP-AID LIST UDS-COMPARISON-TABLES

A Guest Controller can read InfoBank panels normally restricted to Controllers.

Note:

A Guest Controller may not enter a CONTROL UDS command and only a Dictionary Controller or a Guest Controller can execute any of the UDS-related commands other than the MP-AID LIST UDS- commands. Since you do not have a Logon Profile, you cannot be a Guest Controller. Thus you can only enter these commands from one of your own dictionaries; that is, as a Host Controller.

This table is a tabulation of the availability of UDS-related commands to Controllers and the Systems Administrator:

Availability of UDS-related Commands

Command \ User Category	Dictionary Controller	Designated Controller	Guest Controller	Systems Administrator
CONSTRUCT UDS-TABLE	Yes	No†	Yes	No‡
CONTROL UDS	Yes	No‡	No	No‡
COMPARE UDS	Yes	No†	Yes	No‡
SHOW UDS	Yes	No†	Yes	No‡
MP-AID LIST UDS-TABLES	Yes	Yes	Yes	Yes
MP-AID LIST UDS-COMPARISON-TABLES	Yes	Yes	Yes	Yes

† Unless also operating as a Guest or Host Controller.
‡ Unless also operating as a Host Controller.

The Autolog Procedure

The LOGON command is mandatory via a Logon Panel in CICS, TSO, CMS, and Siemens Timesharing Interface environments, unless the Logon Exit facility is available and implemented to provide automatic logon. In other environments (except for TSO/ISPF), if the first command entered is not the LOGON command, ControlManager will automatically invoke the default Autolog procedure. The Autolog procedure would not be automatically executed in these circumstances:

- If the first command is a valid LOGOFF command, the command will be executed and the run will be terminated
- If the first command is any variant of the MP-AID command, other than MP-AID CREATE or MP-AID RELOAD, the command is rejected and you must enter another first command
- If the first command is ENVIRONMENT or a valid MP-AID CREATE or MP-AID RELOAD command, the command will be executed and you can enter additional commands just as if you were beginning a new run. The next command would be treated as if it were the first command entered, and all the above rules apply; that is, if the next command is not the LOGON command, then the Autolog procedure is automatically initiated (except in the case of the MP-AID, ENVIRONMENT, and LOGOFF commands, as indicated above).

In TSO/ISPF environments you can either log on via a Logon Panel with your Logon Identifier and password or select the Autolog procedure.

These are the steps of the Autolog procedure:

- If GLOBAL0000 exists as a Global Profile member of the MP-AID, it is invoked and its commands are executed
- Similarly, if GLOBALAUTO exists as an MP-AID Global Profile member, it is also invoked and its commands executed

Since GLOBAL0000 is also invoked when the LOGON command is executed, except when you log on specifying the NO-PROFILE keyword, only the commands of GLOBALAUTO are specific to the Autolog procedure. Thus, if you wish to perform an Autolog-specific function, it must be specified in GLOBALAUTO.

Note:

In batch and online environments in which the LOGON command is optional, you can effectively enforce the use of the LOGON command by including just the single command, LOGOFF, in the Global Profile GLOBALAUTO.

For details of the Logon Exit refer to *ASG-Manager Products Systems Administrator's Environmental Control Facility*.

For details of the MP-AID RELOAD command refer to "Unloading, Loading, and Reloading the MP-AID" on page 88 and for details of the MP-AID CREATE command refer to "Creating the MP-AID" on page 11.

Limit to the Number of Logon Attempts

By default there is no limit to the number of attempts a user may make to log on to Manager Products in full-screen interactive environments.

The Systems Administrator may use the MAXLOG keyword of the DCUST macro to specify a maximum permitted number of logon attempts. Any number from 1 to 30,000 may be set.

If the specified limit is exceeded, the Manager Products run terminates with this message:

```
7997C MAXIMUM PERMITTED LOGON ATTEMPTS EXCEEDED.
```

5 Updating the MP-AID

This chapter includes these sections:

Read/Write Mode 36

All Users Updating the MP-AID 36

Controllers Updating the MP-AID 38

Systems Administrator Updating the MP-AID 40

Effect on MP-AID Date and Time Records 41

Constructing MP-AID Members 41
The CONSTRUCT Command 41
Constructing an Individual Member onto the MP-AID 43
Constructing All Members of a Specified Type onto the MP-AID 43
Constructing Changed Members of a Specified Type onto the MP-AID 44
The CONSTRUCT Command Syntax 44

Deleting Members from the MP-AID 45
The MP-AID DELETE Command 45
The MP-AID DELETE Command Syntax 46

Resetting MP-AID Members 47
The MP-AID RESET Command 47
Resetting MP-AID PROFILE Members 48
Resetting MP-AID INFOBANK Members. 49
Resetting MP-AID USER-MEMBERs 49
Resetting UDS-TABLE Members 50
The MP-AID RESET Command Syntax 52

Read/Write Mode

The MP-AID is opened in read/write mode in ALL ENVIRONMENTS except when logon is via Autolog, in which case it is opened in read only mode. However, the DCUST option is available to control users' ability to update the MP-AID. If UPMPAID is set to NO in DCUST, users will not be able to update the MP-AID despite the fact it is open in a read/write mode.

When you log on as the Systems Administrator you can specify the keyword UPDATE-MPAID in the Logon command. This opens the MP-AID in update mode for you only, if DCUST is set to NO.

If the Systems Administrator's Environment Control Facility is installed, a SET command variant is available which enables you to override the DCUST setting for individual/groups of users having the ability to update the MP-AID. This option can be included in Global or Logon Profiles.

Refer to *ASG-Manager Products Systems Administrator's Environmental Control Facility* for details of the SET MPAID-UPDATES command.

All Users Updating the MP-AID

The EDIT and FILE commands (and the other editor commands) may be used by any user to add or update MP-AID USER-MEMBERs. The user's Logon Identifier is associated with each USER-MEMBER added and, apart from the Systems Administrator, only users who share the same Logon Identifier can interrogate, edit, or delete these members. Even the Systems Administrator cannot use another user's USER-MEMBER as a User Executive Routine.

USER-MEMBERs, WORKBENCH, and KEPT-DATA members can be deleted by the user who created them or by users who share the same Logon Identifier by entering the MP-AID DELETE command.

The TRANSLATE command can translate members from a Manager Products dictionary into source input statements for another dictionary system. After translation, the source statements are held in a USER-MEMBER on the MP-AID. The USER-MEMBER can be either Private or Public. A Public USER-MEMBER may be interrogated by any user who specifies (in the appropriate command) the Logon Identifier of the user who created it.

The HOLD command can be entered by any user to add TRANSIENT members to the MP-AID. The user's Logon Identifier is associated with each TRANSIENT member added and it is accessible only by the Systems Administrator and users with the same Logon Identifier. It may only be deleted by the Systems Administrator or by the user who added it, in the same session in which it was added.

No other user, even with the same Logon Identifier, may delete the TRANSIENT member. At the end of a session, all the user's TRANSIENT members are automatically deleted. However, if the session terminates abnormally, for example because of an abend, TRANSIENT members may remain. In this case, such members are deleted at the subsequent logon provided that the Logon Profile is exclusive and that the MP-AID can be updated.

A STORE command can be used to place the contents of a KEPT-DATA list or a WORKBENCH onto the MP-AID.

A KEPT-DATA member is private to the Logon Identifier of the user who creates it (its owner). The owner can Alter, List, and Delete the member.

You alter a KEPT-DATA member by:

- Fetching it into a KEPT-DATA list in virtual storage
- Altering the KEPT-DATA list using KEEP or DROP commands
- Storing the KEPT-DATA list onto the MP-AID again.

The Systems Administrator can Print and Delete the member. No other user can access it.

WORKBENCH members are public, that is, they can be listed by any user if they specify the correct Logon Identifier. Only the Systems Administrator can delete another user's WORKBENCH members.

A FETCH command can be used to retrieve KEPT-DATA and WORKBENCH members to enable them to be processed.

If PROFILE variables have been allocated during the Manager Products session, they are automatically written at logoff to a VARIABLE-POOL MP-AID member, provided the user has read/write access to the primary MP-AID and either is logged on under an Exclusive Logon Profile or is the Systems Administrator. When the user next logs on, the PROFILE variables are automatically retrieved from the MP-AID.

Controllers Updating the MP-AID

The CONSTRUCT command can be used by Host and Guest Controllers to add or replace MP-AID primary UDS-TABLE members if User Defined Syntax is installed.

If the UDS facility is installed, the COMPARE UDS command, which is used to compare two UDS Tables for dictionary member type compatibility, may be entered by the Host and Guest Controllers only. It causes a new UDS-COMPARISON-TABLE member to be added to the MP-AID, in which the result of the comparison is recorded.

If the User Defined Syntax facility is installed, the CONTROL UDS command may be entered only by a Host Controller. It assigns a UDS Table (either an ASG-supplied module present in the Manager Products Program Library or a primary UDS-TABLE member present in the MP-AID) to the currently open dictionary and causes a new secondary UDS-TABLE member to be added to the MP-AID, in which the assignment, plus the location of the UDS Table is recorded. Whenever a valid CREATE, RELOAD or RESTORE ALL command is processed (if the UDS facility is installed), a secondary UDS-TABLE member is automatically added to the MP-AID.

Refer to *ASG-Manager Products Controllers Manual* for details of constructing UDS-TABLEs.

This table tabulates the updating members on the MP-AID:

MP-AID Member Types: Adding or Placing on the MP-AID

MP-AID Member Type	Dictionary Type	Command	Authorized User	Product/ Facility
PROFILE	LOGON-PROFILE GLOBAL-PROFILE	CONSTRUCT MP-AID LOAD	Systems Administrator	
INFOBANK	INFOBANK-PANEL	CONSTRUCT MP-AID LOAD	Systems Administrator	UDI
EXECUTIVE	EXECUTIVE-ROUTINE	CONSTRUCT MP-AID LOAD	Systems Administrator	UDC
FORMAT	FORMAT	CONSTRUCT MP-AID LOAD	Systems Administrator	UDO UDO
UDS-TABLE (primary)	HIERARCHY	CONSTRUCT	Host, Guest Controller	UDS
		MP-AID LOAD	Systems Administrator	UDS
UDS-TABLE (secondary)	N/A	CONTROL UDS CREATE, RELOAD	Host Controller	UDS

MP-AID Member Types: Adding or Placing on the MP-AID

MP-AID Member Type	Dictionary Type	Command	Authorized User	Product/ Facility
		MP-AID LOAD	Systems Administrator	UDS
UDS-COMPARISON- TABLE	N/A	COMPARE UDS	Host, Guest Controller	UDS
		MP-AID LOAD	Systems Administrator	UDS
USER-	N/A	EDIT, FILE	General User	EIF
MEMBER		MP-AID LOAD	Systems Administrator	EIF
USER-MEMBER (public)	N/A	TRANSLATE	General User	DYR
TRANSIENT	N/A	HOLD	General User	EIF
KEPT-DATA	KEPT	STORE	General User	DMR
TRUL	TRANSLATION-RULE	CONSTRUCT MP-AID LOAD	Systems Administrator	DYR
WORKBENCH	N/A	STORE	General User	DSR
VARIABLE-POOL	VARIABLE-POOL	Created by presence of PROFILE variables	Systems Administrator	UDS DYR

Key

DMR	DataManager
DSR	DesignManager
DYR	DictionaryManager
EIF	Extended Interactive Facility
UDC	User Defined Commands
UDI	User Defined InfoSystem
UDO	User Defined Output
UDS	User Defined Syntax

Systems Administrator Updating the MP-AID

The CONSTRUCT command is used by the Systems Administrator to add or replace members on to the MP-AID from information stored in the Administration dictionary. These are the MP-AID member types which can be built by the CONSTRUCT command:

- EXECUTIVES
- FORMATS
- INFOBANK
- Primary UDS-TABLE
- PROFILES
- TRANSLATION-RULE

The MP-AID LOAD command can be used only by the Systems Administrator to load all or selected member types (other than TRANSIENTs) on to the MP-AID from an input MP-AID UNLOAD dataset. It should be used during the installation procedure to load the InfoBank and EXECUTIVE members required for Panel Driven Processing from the ASG-supplied release tape. If DictionaryManager (selectable unit TE08) is installed, you can also load the ASG-supplied TRANSLATION-RULES.

The MP-AID RELOAD command creates and loads an entire MP-AID from an MP-AID UNLOAD dataset.

Refer to "Constructing MP-AID Members" on page 41 for details of the CONSTRUCT command. Refer to "Unloading, Loading, and Reloading the MP-AID" on page 88 for details of the MP-AID LOAD and MP-AID RELOAD commands.

Effect on MP-AID Date and Time Records

These are the three types of MP-AID date and time records:

- Those which are concerned with the entire MP-AID and are thus reported in the output of the MP-AID STATUS command. This includes:
  - The date and time the MP-AID was created
  - The date and time of the last MP-AID back-up
  - The date and time the MP-AID was last reloaded.
- Those giving the date and time each individual MP-AID member was added or last replaced, as reported by the MP-AID LIST command
- Those giving the control date and time for each constructible MP-AID member type (other than UDS-TABLE); that is, the date and time the last CONSTRUCT ALL or CONSTRUCT CHANGES-ONLY was executed for that member type.

Refer to Chapter 6, "Interrogating the MP-AID," on page 53 for details of the MP-AID LIST and MP-AID STATUS commands. Refer to "The Manager Products Administration Dictionary" on page 17 for details of the CONSTRUCT command.

Constructing MP-AID Members

The CONSTRUCT Command

The CONSTRUCT command enables you to create the following types of MP-AID member by constructing members of the Manager Products Administration dictionary onto the MP-AID:

- PROFILE
- INFOBANK
- EXECUTIVE
- Primary UDS-TABLE
- FORMAT
- TRANSLATION-RULE

In the case of primary UDS-TABLE members, the CONSTRUCT command can be used by Host and Guest Controllers. A description of the CONSTRUCT UDS-TABLE command can be found in *ASG-Manager Products Controller's Manual*.

The name of the MP-AID member added or replaced by the CONSTRUCT command will be the same as the name of the constructed dictionary member. However, you can specify:

- An IDENTITY clause (in the case of a LOGON-PROFILE member), or
- An MP-AID-NAME clause (in the case of an EXECUTIVE-ROUTINE member, a FORMAT member, a HIERARCHY member, or a TRANSLATION-RULE member).

in the dictionary member definition. If you do, then the name specified in the above clauses is used as the name of the MP-AID member being CONSTRUCTed. (Note that MP-AID member names must not exceed 10 characters in length, whereas dictionary member names may be up to 32 characters in length.)

For example, if you included the IDENTITY clause specifying the name ALAN into the dictionary member BILL when you CONSTRUCT the dictionary member BILL onto the MP-AID, the generated MP-AID PROFILE member would use the Logon Identifier ALAN instead of BILL.

You can add or replace one, some, or all MP-AID members of a specified type by entering the appropriate keyword or clause as part of the CONSTRUCT command. Thus, you can add or replace:

- A single member of a specified type from a specified dictionary member.
- Changed members of a specified type, when you enter the CONSTRUCT command with the keyword CHANGES-ONLY. This will compare the date and time each member of the specified type was last encoded on the dictionary with a control date and time recorded in the MP-AID for the specified member type; any dictionary members encoded since the control date and time will be selected for addition or replacement to the MP-AID.
- All members of a specified type, through use of the keyword ALL in the CONSTRUCT command.

The control date and time for the specified member type and the date and time records of each individual member are updated when you CONSTRUCT using the keywords ALL or CHANGES-ONLY. However, when you CONSTRUCT a single member, only the control date and time in respect of the individual member is updated.

Refer to "Logon Profiles for Controllers" on page 30 for details of Host and Guest Controllers. Refer to "Effect on MP-AID Date and Time Records" on page 41 for details of control date and time for an MP-AID member type. Refer to "The CONSTRUCT Command Syntax" on page 44 for the syntax of the CONSTRUCT command.

Constructing an Individual Member onto the MP-AID

Enter this command to add a new member of a specified type to the MP-AID:

```
CONSTRUCT mpaid-member-type FROM dict-member-name;
```

where:

dict-member-name is the name of the dictionary member to be constructed

mpaid-member-type is one of these:

PROFILE	EXECUTIVE	INFOBANK
TRANSLATION-RULE	FORMAT	UDS-TABLE

To update an existing MP-AID member you must replace it with the keyword REPLACE in the CONSTRUCT command before the terminator. For example:

```
CONSTRUCT PROFILE FROM BILL REPLACE
```

Note:

When a single member is constructed, only its date and time record for that member is updated. The control date and time for the member type is not updated.

For details of date and time records for an MP-AID member type refer to "Effect on MP-AID Date and Time Records" on page 41. For the syntax of the CONSTRUCT command refer to "The CONSTRUCT Command Syntax" on page 44.

Constructing All Members of a Specified Type onto the MP-AID

Enter this command to add and/or replace all members of a specified type (other than UDS-TABLE members) to the MP-AID:

```
CONSTRUCT mpaid-member-type ALL;
```

When you construct all members of a specified type, each member of that type will have its date and time records updated. The control date and time record for each MP-AID member type is also updated.

The command causes all the existing MP-AID members to be removed from the MP-AID before any are CONSTRUCTed from the dictionary members. Thus, any MP-AID member for which there is no longer a corresponding dictionary member is removed and although one or more of the members may already have existed as MP-AID members, each will be reported as having been added to the MP-AID rather than replaced. If two members include the same MP-AID-NAME specification, the first would be added and the second would be rejected.

For example, this command would generate an EXECUTIVE member on the MP-AID from each EXECUTIVE-ROUTINE member of the current dictionary:

```
CONSTRUCT EXECUTIVE ALL;
```

For details of control date and time for an MP-AID member type refer to "Effect on MP-AID Date and Time Records" on page 41. For the syntax of the CONSTRUCT command refer to "The CONSTRUCT Command Syntax" on page 44.

Constructing Changed Members of a Specified Type onto the MP-AID

Enter this command to add and/or replace changed members of a specified type (other than UDS-TABLE members) to the MP-AID:

```
CONSTRUCT mpaid-member-type CHANGES-ONLY;
```

If, for an existing MP-AID member, no corresponding member currently exists in the dictionary, then no action is taken in respect of the MP-AID member.

For details of control date and time for an MP-AID member type refer to "Effect on MP-AID Date and Time Records" on page 41. For the syntax of the CONSTRUCT command refer to "The CONSTRUCT Command Syntax" on page 44.

The CONSTRUCT Command Syntax

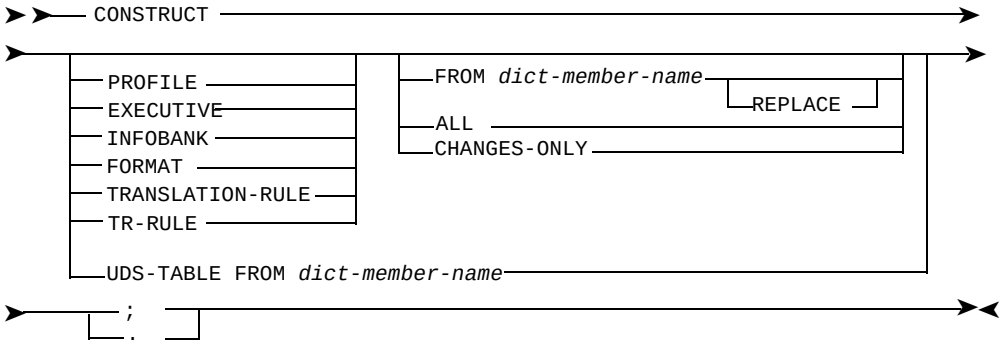

where *dict-member-name* is the name of a dictionary member being used to add or replace a member on the MP-AID.

Deleting Members from the MP-AID

The MP-AID DELETE Command

As Systems Administrator you can use the MP-AID DELETE command (also accepted as MP-AID PURGE and MP-AID REMOVE) to remove any MP-AID members, including those created by other users. Other MP-AID users' ability to delete MP-AID member/s is governed by the rules regarding users' access to MP-AID members.

Enter this command to delete MP-AID PROFILE, CORPORATE-EXECUTIVE, FORMAT, INFOBANK, primary UDS-TABLE, TRANSLATION-RULE, and VARIABLE-POOL members:

```
MP-AID DELETE mpaid-member-type member-name;
```

Enter this command to delete MP-AID USER-MEMBER, TRANSIENT, KEPT-DATA, and WORKBENCH members:

```
MP-AID DELETE mpaid-member-type member-name logon-identifier;
```

where *`logon-identifier`* is the Logon Identifier of the user who added the USER-MEMBER, TRANSIENT, KEPT-DATA, or WORKBENCH member to the MP-AID. The Logon Identifier is optional if you are deleting one of your own members.

Enter this command to delete MP-AID UDS-COMPARISON-TABLE members:

```
MP-AID DELETE UDS-COMPARISON-TABLE uds-table-1 uds-table-2;
```

where *`uds-table-1`* and *`uds-table-2`* are names of UDS Tables, each of which is either an ASG-supplied module or is contained in a primary UDS-TABLE member of the MP-AID.

In the syntax, UDSC is accepted in place of UDS-COMPARISON-TABLE.

When a primary UDS-TABLE member is deleted, every UDS-COMPARISON-TABLE member in which it is named (as either of the comparands) is also deleted. This occurs automatically.

Note:

Under certain circumstances the MP-AID DELETE command may fail to execute when applied to MP-AID PROFILE, USER-MEMBER, and UDS-TABLE members. Use of the MP-AID RESET command may be necessary in order to successfully delete the member.

For details of the MP-AID RESET command refer to "The MP-AID RESET Command" on page 47. For the syntax of the MP-AID DELETE command refer to "The MP-AID DELETE Command Syntax" on page 46.

The MP-AID DELETE Command Syntax

```
>>─┬─ MP-AID ─┬─┬─DELETE ─┬──────────────────────────────────────────>
   └─ MPAID ──┘ ├─ PURGE ─┤
                └─ REMOVE ─┘

>──┬──PROFILE ──────────┬──────mpaid-member-name──┬──────────────────>
   ├──EXECUTIVE ────────┤                         │
   ├──INFOBANK ─────────┤                         │
   ├──FORMAT ───────────┤                         │
   ├──TRANSLATION-RULE ─┤                         │
   │  ├─TR-RUL ─────────┤                         │
   │  └─TRULE ──────────┤                         │
   ├──UDS-TABLE ────────┤                         │
   │  └─UDST ───────────┤                         │
   ├──VARIABLE-POOL ────┤                         │
   │  └─VBPL ───────────┘                         │
   │                                              │
   ├──UDS-COMPARISON-TABLE ─┬─uds-table1 uds-table2─┤
   │  └─UDSC ───────────────┘                      │
   │                                               │
   ├──USER-MEMBER ──────┬─mpaid-member-name──┬──────┤
   ├──TRANSIENT ────────┤                    └─logon-identifier─┘
   ├──KEPT-DATA-LIST ───┤
   └──WORKBENCH ────────┤
      ├─WBCH ───────────┤
      └─WBDA ───────────┘

>──┬─ ; ─┬──────────────────────────────────────────────────────────><
   └─ . ─┘
```

where:

mpaid-member-name is the name of an MP-AID member

uds-table-1 and *uds-table-2* are names of UDS Tables each of which is either an ASG-supplied module or is contained in a primary UDS-TABLE member of the MP-AID

logon-identifier is the Logon Identifier of the user who added the MP-AID member.

Resetting MP-AID Members

The MP-AID RESET Command

The MP-AID RESET command is used to remove a flag, counter, or record which indicates that an MP-AID member is in use, being currently processed, or is in a noteworthy condition but which, under certain abnormal circumstances, may prevent the MP-AID member from both fulfilling its function and/or being deleted from the MP-AID. A typical circumstance in which MP-AID RESET must be used is where a user with an exclusive Logon Identifier cannot log on due to the Logon flag being set because a session ended abnormally and the flag was not unset.

This is the basic format of the command:

```
MP-AID RESET member-type member-name;
```

For example, if you are editing a USER-MEMBER named BILL and your computer fails, the update-in-progress flag for BILL will still be set when the computer is restored. To reset the flag enter:

```
MP-AID RESET USER-MEMBER BILL;
```

These are circumstances in which certain member types cannot fulfill their function and/or be deleted:

- A PROFILE member when the Logon flag is set or the (internal) Logon count is greater than zero
- A USER-MEMBER when the update-in-progress flag is set
- An INFOBANK member when the change-reference string is set
- A primary UDS-TABLE member if any secondary UDS-TABLE members exist for the indicated UDS Table (but not a secondary UDS-TABLE member which can be removed when a CONTROL UDS command is executed assigning another UDS Table to the same dictionary).

Under the above circumstances an MP-AID RESET must be executed before you can cause an MP-AID DELETE command.

An MP-AID RESET (or a CONTROL UDS) command is required for removal of a secondary UDS-TABLE member with a given name before a primary UDS-TABLE member with the same name can be deleted.

For details of UDS-TABLE members refer to *ASG-ControlManager User's Guide*. For the syntax of the MP-AID RESET command refer to "The MP-AID RESET Command Syntax" on page 52.

Resetting MP-AID PROFILE Members

When any user other than the Systems Administrator logs on to Manager Products the MP-AID (Logon) PROFILE member with the same name as the user's Logon Identifier is invoked, unless logon is via Autolog.

If the Logon Identifier is exclusive, an internal Logon flag is set to record that the Logon Identifier is in use. While the flag is set, no other user can log on with the same Logon Identifier until the flag is unset. Furthermore, the PROFILE member cannot be deleted; that is, an MP-AID DELETE command will not be accepted for the member. Normally the flag is unset when the user logs off.

If the Logon Identifier is shared, an internal Logon counter is incremented by one to record the number of users currently logged on with that Logon Identifier. Normally the counter is decremented by one when the user logs off. As in the case of an exclusive Logon Identifier, the PROFILE cannot be deleted while the Logon count is greater than zero.

In either case, exclusive or shared, you can enter a CONSTRUCT command to replace a Logon PROFILE member which is in use, with the proviso that an exclusive PROFILE cannot be changed to a shared PROFILE and vice versa. However, a CONSTRUCT PROFILES ALL command will be rejected if any PROFILE member is in use.

The QUERY ONLINE command is provided so that you can find out which Logon Profiles are in current use; that is, which shared Logon Profile counters are greater than 0 and which Exclusive Logon Profiles are in use. Output from an MP-MD LIST PROFILES command gives the total number of times each Logon Profile member has been successfully invoked.

If a run is terminated abnormally, in-use flags and Logon counters may fail to unset/decrement. Thus ControlManager may consider a Logon Identifier to be in use. Consequently, an MP-AID DELETE command entered for the PROFILE member would not be accepted. Nor could a user logon with the associated Logon Identifier if it is exclusive. In the case of a shared Logon Identifier, the Logon count would be incorrect.

The action of the MP-AID RESET command entered for a PROFILE member is to unset its Logon flag or to reset the Logon counter to zero.

Enter this command to reset the in-use flag or counter for a specific PROFILE member:

`MP-AID RESET PROFILE` *`mpaid-member-name`*`;`

where *`mpaid-member-name`* is the name of a MP-AID member.

Enter this command to reset the in-use flag or counter for all PROFILE members that require resetting:

```
MP-AID RESET ALL PROFILES;
```

which resets only those Logon PROFILEs whose Logon flag is set or Logon counter is greater than zero.

For details of PROFILE members refer to "Overview" on page 25. For the syntax of the MPAID RESET command refer to "The MP-AID RESET Command Syntax" on page 52.

For details of the QUERY ONLINE command refer to the *ASG-ControlManager User's Guide*.

Resetting MP-AID INFOBANK Members

The action of the MP-AID RESET command when entered for an INFOBANK member is to delete the change-reference string associated with that member. The change-reference string is specified using the MP-AID FLAG command.

Enter this command to reset a specific INFOBANK member:

```
MP-AID RESET INFOBANK mpaid-member-name;
```

Enter this command to reset all INFOBANK members:

```
MP-AID RESET ALL INFOBANK;
```

The above command will delete all the change-reference strings which are set.

For details of the MP-AID FLAG command refer to "The MP-AID FLAG Command" on page 103. For the syntax of the MP-AID RESET command refer to "The MP-AID RESET Command Syntax" on page 52.

Resetting MP-AID USER-MEMBERs

If the Extended Interactive Facility (selectable unit CMR-FE01) installed, users can create and update their own MP-AID USER-MEMBERs using the EDIT and FILE commands and ControlManager Editor commands.

Normally a USER-MEMBER can be updated by other users sharing the same Logon Identifier. While an MP-AID USER-MEMBER is being updated, no other user has update access to the member. An update-in-progress flag is set for a USER-MEMBER when it is being edited which prevents the users updating the member at the same time. The flag is normally unset when the user (who caused it to be set initially) enters a FILE or XQUIT command.

The action of the MP-AID RESET command when entered for a specific USER-MEMBER is to unset the update-in-progress flag. It should be entered only when the flag is in error and the USER-MEMBER is not in use.

Enter this command to reset a specific USER-MEMBER:

```
MP-AID RESET USER-MEMBER mpaid-member-name logon-identifier;
```

where *logon-identifier* is the Logon Identifier of the user owning the member. This is an optional specification if you are resetting one of your own USER-MEMBERs.

Enter this command to reset all USER-MEMBERs with the update-in-progress flags set:

```
MP-AID RESET ALL USER-MEMBERS;
```

However, if a run is terminated abnormally while the USER-MEMBER is being edited the flag would may not be unset. In such a case subsequent users would not be able to update or delete the USER-MEMBER. To remedy the situation, you would have to enter an MP-AID RESET command for the member, which would cause the flag to be unset.

For the syntax of the MP-AID RESET command refer to "The MP-AID RESET Command Syntax" on page 52.

Resetting UDS-TABLE Members

The action of the MP-AID RESET command, when entered for a specific UDS Table (assigned to a specific dictionary), is to delete a secondary UDS-TABLE member (if one is present in the MP-AID) which records the assignment of the specified UDS Table to the specified dictionary.

Enter this command to reset a secondary UDS-TABLE member:

```
MP-AID RESET UDS-TABLE uds-table-member-name dictionary-name;
```

where:

uds-table-member-name is the name of a secondary UDS-TABLE member of the MP-AID and the name of a UDS Table which is either an ASG-supplied module or a primary UDS-TABLE member of the MP-AID

dictionary-name is the name of the dictionary to which the UDS Table is assigned.

There are several circumstances in which you may need to RESET secondary UDS Table members:

- To delete a secondary UDS Table itself
- In order to delete its associated primary UDS Table member.

For the syntax of the MP-AID RESET command refer to "The MP-AID RESET Command Syntax" on page 52.

Resetting Secondary UDS-TABLE Members

If the UDS facility (selectable unit CMR-UD1) is installed, the CONTROL UDS command causes both:

- The specified UDS Table to be assigned to the currently open dictionary
- A secondary UDS-TABLE member with the same name as the UDS Table to be added to the MP-AID and records the assignment of the UDS Table to the dictionary.

Refer to the *ASG-Manager Products Controller's Manual* for details.

A secondary UDS-TABLE recording any previous UDS Table assignment will be deleted, if present.

However, if duplicate secondary UDS-TABLE members are present in the MP-AID which satisfy these conditions, only one will be removed. (Two or more identical secondary UDS-TABLE members may be present in the MP-AID due to previously executed CREATE and/or RELOAD commands, when, for example, reorganizations or recoveries of the dictionary are required. The CREATE and RELOAD commands, described in *ASG-Manager Products Controller's Manual*, cause new secondary UDS-TABLE members to be added to the MP-AID, but they do not cause old members to be removed.)

Resetting Duplicate Secondary UDS-TABLE members

If you want to remove duplicate members caused by previous CREATE and/or RELOAD commands, you must enter one or more MP-AID RESET commands (one for each duplicate member you want to delete) that specify both the UDS Table and the dictionary to which it is assigned.

Note:

The MP-AID RESET command optional keyword ALL is not available when specifying secondary UDS Tables in the command.

Resetting Obsolete Secondary UDS-TABLE members

Another situation in which you might want to delete secondary UDS-TABLE members can arise when a dictionary becomes obsolete. For example, a dictionary created for a specific project may become obsolete once that project is completed. Each secondary UDS-TABLE member referencing such a dictionary would also become obsolete and should be removed from the MP-AID. This can be done only by use of the MP-AID RESET UDS-TABLE command.

For the syntax of the MP-AID RESET command refer to "The MP-AID RESET Command Syntax" on page 52.

Resetting Secondary UDS-TABLE Members to Delete Primary Members

Use of the MP-AID RESET command may be required if you decide to delete a primary UDS-TABLE member from the MP-AID. This must be done using the MP-AID DELETE command. However, the MP-AID DELETE command will be rejected when entered for a primary UDS-TABLE member if one or more secondary UDS-TABLE members of the same name are present in the MP-AID.

Each secondary UDS-TABLE member records the assignment to a dictionary of the UDS Table contained in the primary UDS-TABLE member and each inhibits execution of the MP-AID DELETE command for the primary member.

Each such secondary member must be removed before you can delete the primary member. You can do this either by entering an MP-AID RESET command for the secondary member or a CONTROL UDS command assigning another UDS Table to the specified dictionary. The latter procedure requires that the dictionary be open when the command is entered. The MP-AID RESET command does not.

For the syntax of the MP-AID RESET command refer to "The MP-AID RESET Command Syntax" on page 52.

The MP-AID RESET Command Syntax

```
MP-AID RESET
{ ALL { PROFILES    }                                  { ; }
      { INFOBANK    }                                  { . }
      { USER-MEMBERS }

  { PROFILE  } mpaid-member-name
  { INFOBANK }

  USER-MEMBER mpaid-member-name [logon-identifier]

  { UDS-TABLE } uds-table-member-name dictionary-name
  { UDST      }
```

where:

mpaid-member-name is the name of an MP-AID member

logon-identifier is the Logon Identifier you have assigned to one or more users (for details of LOGON-PROFILE dictionary members, refer to "Logon and Global Profiles" on page 25.

dictionary-name is the name of the dictionary to which the UDS Table is assigned.

6 Interrogating the MP-AID

You can interrogate the MP-AID with these commands, which are discussed in this chapter:

MP-AID ANALYZE 55
Simulating a Changed Blocksize 56
Explanation of Display Tables 56
Choosing an Optimum Blocksize 57
MP-AID ANALYZE Syntax. 57

MP-AID BUFFERS. 58
Example of Output 58
Explanations of Output 59
Changing the Size of the Buffer Pool 60
Monitoring Buffer Steals. 60
Gaining Read-only Access to Other MP-AIDs. 61
MP-AID BUFFERS Syntax 61

MP-AID CONCATENATION. 62
Listing the Current MP-AID Concatenation. 63
Turning Concatenation Off 63
MP-AID CONCATENATION Syntax 63

MP-AID DIAGNOSE 64
Checking the Integrity of the MP-AID 64
Repairing Inconsistencies on the MP-AID 65
Error Codes Reported by the MP-AID DIAGNOSE Command 66
Examples of Output from the MP-AID DIAGNOSE Command 67
MP-AIDE DIAGNOSE Syntax. 68

MP-AID EXEC-LIST 68
MP-AID EXEC-LIST Syntax 69

MP-AID LIST 71
Description of Output 71
Listing Selected Member Types 73
Listing Members Added by a Specific User 73
Listing Members in Date Order 74
Listing Members within a Given Alphanumeric Range 74
Listing Members on a Secondary MP-AID 75
Which Users Can List Which Members 76

MP-AID LIST Syntax 76

MP-AID PRINT 78
Printing Members Held on a Secondary MP-AID 79
Examples of the MP-AID PRINT Command 80
Which Users Can Print Which Members 81
MP-AID PRINT Syntax 81

MP-AID STATUS 82
MP-AID STATUS Syntax 83

These are all InfoSystem commands:

```
HELP
INFOBANK
PANEL
SELECT
RETRACE
```

The contents of InfoBank panels can be determined using the HELP, PANEL, and INFOBANK commands. You can also use the SELECT and RETRACE commands to display InfoBank panels. If the User Defined InfoSystem facility is installed, you can interrogate the INFOBANK-PANEL members of the Manager Products Administration Dictionary using interrogation commands.

Any user may use the MP-AID LIST, MP-AID EXEC-LIST, and MP-AID PRINT commands to list and print certain MP-AID member types. The Systems Administrator has extended variants of these commands allowing you to list and print additional member types.

The MP-AID STATUS, MP-AID ANALYZE, MP-AID BUFFERS, MP-AID CONCATENATION, and MP-AID DIAGNOSE commands are for use by the Systems Administrator only. General users can use the MP-AID CONCATENATION command to find out which secondary MP-AIDs they can access.

Note:

All MP-AID interrogation commands work by default on the primary MP-AID. To interrogate a secondary MP-AID, use the CONCATENATION, ANY-CONCATENATION, or ALL-CONCATENATION keywords in the relevant MP-AID command.

Refer to "Concatenated MP-AIDs" on page 13 for further details of MP-AID concatenation.

MP-AID ANALYZE

MP-AID is used to analyze the condition of either a primary or secondary MP-AID. Refer to "MP-AID ANALYZE Syntax" on page 57 for the syntax of the MP-AID ANALYZE command.

You can use the MP-AID ANALYZE command to display an analysis of either the primary or a secondary (concatenated) MP-AID, in terms of:

- Member directory logical block fragmentation
- Free chain logical block fragmentation
- Member data block utilization.

You can use this output as a guide as to the expected performance of the MP-AID when accessing or editing the members contained on it. Excessive logical block fragmentation or an incorrect logical blocksize causes extra physical reads/writes, and so increases response times.

The display given consists of three tables, headed:

- DIRECTORY ANALYSIS BY MEMBER TYPE
- FREE CHAIN ANALYSIS
- DATA BLOCK USAGE ANALYSIS.

To show an analysis of the primary MP-AID, enter:

```
MP-AID ANALYZE;
```

To show an analysis of a secondary (concatenated) MP-AID, enter:

```
MP-AID ANALYZE CONCATENATION mpaid-name;
```

where *`mpaid-name`* is the logical name of your secondary MP-AID.

For further details about optimizing blocksizes, refer to the publication *ASG-Manager Products Performance Tuning*.

Simulating a Changed Blocksize

To simulate the effect of a changed blocksize, without having to actually change the blocksize by rebuilding the MP-AID, enter:

```
MP-AID ANALYZE size;
```

where *size* is a theoretical logical blocksize (in bytes), minimum 700 bytes.

By default, this is the actual logical blocksize. This parameter has no effect upon the DIRECTORY ANALYSIS BY MEMBER TYPE and FREE CHAIN ANALYSIS tables, but alters the DATA BLOCK USAGE ANALYSIS table, and may help you choose a better logical blocksize.

Explanation of Display Tables

DIRECTORY ANALYSIS BY MEMBER TYPE shows fragmentation and directory block total for:

- Each member type with one or more allocated directory blocks
- All members (an overall MP-AID view).

The figures shown for *fragmentation* represent the percentage of forward chains that do not point to the next contiguous directory block. A *forward chain* is a pointer from one logical block to the next.

For example, if you have 16 USER-MEMBER directory blocks, there are 15 forward chains. If 3 chains do not point to the next contiguous directory block, fragmentation is 20 percent (3/15). High fragmentation causes additional physical I/O activity, which adversely affects MP-AID performance. Fragmentation in excess of 20 percent indicates that you should reorganize the MP-AID, using the MP-AID UNLOAD and MP-AID RELOAD commands.

Logical block total is the number of directory blocks used by all members of that member type.

FREE CHAIN ANALYSIS: shows an analysis of the free space on the MP-AID, giving fragmentation and logical block total as above. A fragmented free chain causes fragmented members to be built. Like directories, member data blocks should be contiguous.

DATA BLOCK USAGE ANALYSIS: shows eight columns of figures, showing MP-AID member sizes divided into ranges, with one row per member type. This shows file sizes in relation to the MP-AID logical blocksize.

The leftmost column covers the range 0-600 (600 bytes is the minimum MP-AID logical blocksize). The middle six columns cover ranges between 600 and the actual logical blocksize. If the actual blocksize is less than 700, a blocksize of 2048 is assumed, to give a more meaningful analysis. The rightmost column covers those members larger than the actual logical blocksize.

The figure in each column gives the number of members with sizes in that column's range, followed by the percentage this represents of the total number of members of that type. A summary line covers all members and gives an overall picture of possible wastage within data blocks.

Refer to *ASG-Manager Products Performance Tuning* for examples of displays.

Choosing an Optimum Blocksize

You can increase the MP-AID dataset space utilization by reducing the logical blocksize. Maximum space utilization is generally achieved with the minimum logical blocksize, 600 bytes. The percentage of members smaller than 600 bytes is often very large.

However, reducing the blocksize to the minimum is not always best, as unnecessary processing overhead may be involved. If there are a significant number of members (for example, more than 20 percent) with larger sizes, you should consider a larger blocksize.

You may need to consider member types which are used more often than others, and select a blocksize to suit these member types. You also need to optimize directory usage, as increased directory access decreases MP-AID performance. You should choose a blocksize which maximizes directory entries and minimizes wastage in blocks.

Directory blocks contain 16 bytes of control information, followed by as many 46-byte directory entries as will fit into the logical block. For example, if you want to select a blocksize of between 900-1100 bytes, blocksizes of 936, 982, 1028, 1074 also optimize directory usage (these sizes are all multiples of 46 plus 16).

MP-AID ANALYZE Syntax

```
>>─┬─ MP-AID ─┬─┬─ANALYZE ─┬──────────────────────────────────────>
   └─ MPAID ──┘ └─ ANALYSE ─┘
>──┬──────────────────────────────────────┬──┬──────────┬──┬─ ; ─┬──>◄
   └─CONCATENATION mpaid-name ────────────┘  └─size ────┘  └─ : ─┘
```

where:

mpaid-name is the logical name of a concatenated MP-AID

size is a proposed logical blocksize.

MP-AID BUFFERS

MP-AID BUFFERS optimizes MP-AID processing speed, by manipulating the size of the buffer pool. Refer to "MP-AID BUFFERS Syntax" on page 61 for the syntax of the MP-AID BUFFERS command.

Access to the MP-AID is via a *buffer pool*, containing a number of buffers. Increasing the size of the buffer pool can reduce the number of physical MP-AID reads/writes, which increases MP-AID processing speeds.

You can use the MP-AID BUFFERS command to optimize MP-AID processing speed, by obtaining information about the buffer pool, to see how efficiently it is being used. You can then use the MP-AID BUFFERS command to change the size of your buffer pool to its optimum value.

To display information about the buffer pool, enter:

```
MP-AID BUFFERS;
```

For further details of buffer pools, refer to *ASG-Manager Products Performance Tuning*.

For a DIV MP-AID, the MP-AID BUFFERS command can only be used to determine the buffer size and number of logical accesses performed. Access to the MP-AID is through a single buffer shared by all users, the size of which is fixed at open time. No physical I/O is performed by users of the MP-AID. Updated records are written to permanent storage by a Resource Processing Task (RPT) of MPSF. For compatibility purposes, all variants of the command are accepted, but any buffer respecification is ignored.

Example of Output

This example shows the type of display obtained:

```
MPAID BUFFER USAGE STATISTICS ON 25 MAY 1992 AT 11.30.10
----------------------------------------
 BUFFERS ALLOCATED          :      50
 MAXIMUM BUFFERS USED       :      50
 BUFFER POOL SIZE (K)       :    1000
 READ-ONLY BUFFER STEALS    : *******
 MODIFIED BUFFER STEALS     : *******
 BUFFER POOL HIT RATE       :     97%
 DATASET LOGICAL READS      :   15573
 DATASET PHYSICAL READS     :     384
 DATASET LOGICAL WRITES     :     773
 DATASET PHYSICAL WRITES    :     284
----------------------------------------
END OF BUFFER STATISTICS
DM14000I MPAID PROCESSING SUCCESSFUL
```

Explanations of Output

BUFFERS ALLOCATED. The number of buffers allocated to the buffer pool. This is set on installation to a default value of 3, and has a minimum value of 2.

Refer to the section on tailoring Manager Products in your installation manual for details of changing defaults.

For a DIV MP-AID, sufficient buffers are automatically allocated at open time to accommodate the entire MP-AID.

MAXIMUM BUFFERS USED. The number of buffers currently used. If this number is consistently less than the number of buffers allocated, you should consider reducing the number of buffers allocated, to reduce virtual storage wastage. For a DIV MP-AID this value is the same as the number of buffers allocated.

BUFFER POOL SIZE. The buffer size (the physical blocksize), multiplied by the number of buffers, in Kilobytes.

READ-ONLY and MODIFIED BUFFER STEALS. Displays when the MONITOR keyword is used in the MP-AID BUFFERS command. For a DIV MP-AID these values are always 0.

BUFFER POOL HIT RATE. Gives the percentage of logical reads (from the buffer pool), out of the total number of reads. For a DIV MP-AID the percentage is always 100.

This is the critical figure in assessing buffer pool performance. A high percentage of logical reads means a low percentage of physical reads (from the MP-AID), and less I/O activity. Increasing the size of the buffer pool generally increases the buffer pool hit rate, since fewer physical reads are needed when more data is held in the buffer pool.

DATASET LOGICAL READS. The number of logical blocks read from the MP-AID buffer pool.

DATASET PHYSICAL READS. The number of physical blocks read from the MP-AID dataset into the buffer pool. For a DIV MP-AID this number is always 0.

DATASET LOGICAL WRITES. The number of logical blocks that have been written to the MP-AID buffer pool.

DATASET PHYSICAL WRITES. The number of physical blocks written out from the buffer pool to the MP-AID dataset. For a DIV MP-AID this number is always 0.

Changing the Size of the Buffer Pool

To optimize MP-AID processing speed by changing the size of the buffer pool, enter:

```
MP-AID BUFFERS buffers;
```

where *buffers* is the number of buffers you wish to allocate to the buffer pool. The size of each buffer is the physical blocksize of the MP-AID. You can allocate between 2 and 32000 buffers, subject to virtual storage availability.

Note:

When you use the MP-AID BUFFERS command to reallocate buffers, existing buffers are discarded, and the new buffer pool is recreated in an empty state.

Monitoring Buffer Steals

If, when processing a command, the buffer pool becomes full and more buffer space is needed, the data in the least recently accessed buffer in the buffer pool is overwritten. If the data has been modified, it is written back to the MP-AID, overwriting the previous version; otherwise, it is deleted from the buffer pool.

As processing continues, if data from a previously overwritten buffer is required again, it must be re-read into the buffer pool, causing a *buffer steal*.

This buffer steal can be of two types:

- Read-only, if the data was unchanged before being overwritten
- Modified, if the data was modified before being overwritten

The fewer the steals, the lower the level of I/O activity. A larger number of steals indicates that a larger buffer pool is needed.

To monitor the number of buffer steals occurring in the buffer pool, enter:

```
MP-AID BUFFERS buffers MONITOR;
```

where *buffers* is the new number of buffers to be allocated.

To display the results at any time after monitoring has been enabled, enter:

```
MP-AID BUFFERS;
```

Note:

ASG recommends that you do not use this facility for prolonged periods, as monitoring buffer steals adds a processing overhead in terms of CPU and virtual storage consumption.

Gaining Read-only Access to Other MP-AIDs

To show details about the buffer pool of a secondary MP-AID, enter:

`MP-AID BUFFERS CONCATENATION` *`mpaid-name`*`;`

where *`mpaid-name`* is the logical name of a secondary MP-AID.

To change the size of a buffer pool of a secondary MP-AID, enter:

`MP-AID BUFFERS` *`buffers`* `CONCATENATION` *`mpaid-name`*`;`

where *`buffers`* is the new number of buffers to be allocated.

To change the size of the buffer pools on the primary MP-AID and all secondary MP-AIDs simultaneously, enter:

`MP-AID BUFFERS` *`buffers`* `ALL-CONCATENATIONS;`

MP-AID BUFFERS Syntax

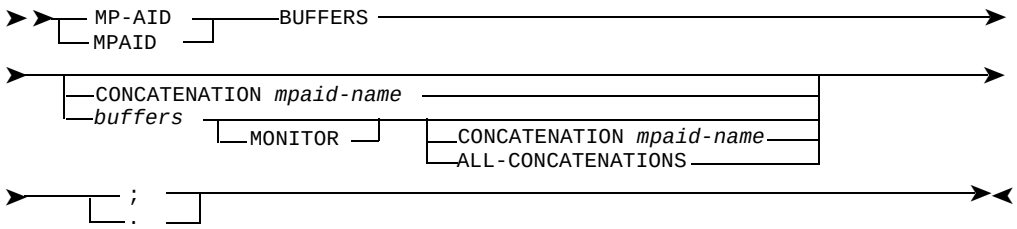

where:

`buffers` is the new number of buffers to be allocated

`mpaid-name` is the logical name of a secondary MP-AID.

MP-AID CONCATENATION

MP-AID CONCATENATION gives read-only access to other MP-AIDs. Refer to "MP-AID CONCATENATION Syntax" on page 63 for the syntax of the MP-AID CONCATENATION command.

To give read-only access to up to 254 MP-AIDs (called secondary MP-AIDs), enter:

```
MP-AID CONCATENATION mp-aid-list;
```

where *mp-aid-list* is a list of one or more concatenation identities, separated by commas or blanks.

Each concatenation identity represents an MP-AID logical name as specified in the control statement defining that MP-AID. For example, in MVS, this is the ddname of a DD/ALLOC control statement. Names generally have a maximum length of eight characters, and must conform to the rules defined for such names by the relevant operating system (refer to the relevant installation manual for further details).

For example, to give read-only access to two MP-AIDs, named MPCORP (containing Corporate Executive Routines) and MPINFO (containing InfoBank panels), enter:

```
MP-AID CONCATENATION MPAID, MPCORP, MPINFO;
```

You define the search order of the MP-AIDs by their position in the specified MP-AID list. The primary MP-AID (always named MPAID) can be specified in any position; the default position is at the start. In the example above, the search order is MPAID, then MPCORP, then MPINFO.

- Each MP-AID specified in the command must:
  - Have been previously created as a primary MP-AID
  - Be valid for the current Manager Products Version and Release
- If an MP-AID specified in the command has been disabled, a warning message displays if the command is issued by the Systems Administrator. In the case of other users, the command is rejected.
- There must be sufficient virtual storage available to accommodate both buffer pools and I/O areas for all concatenated MP-AIDs.
- If the UDS table associated with a repository is on a secondary MP-AID, concatenation must be performed before a DICTIONARY command opens the repository.
- If syntax errors occur in this command, any previous concatenation is maintained. Other types of error cause previous concatenation to be dropped—the MP-AID environment reverts to that of a single primary MP-AID.

Listing the Current MP-AID Concatenation

To display the currently active MP-AID concatenation, enter either:

```
MP-AID CONCATENATION LIST;
```

or

```
MP-AID CONCATENATION;
```

A table is displayed, giving for each MP-AID the:

- Search order (starting from one)
- Access mode (UPDATE or READ-ONLY)
- Logical name (as specified in the MP-AID CONCATENATION command)
- The physical dataset name.

Turning Concatenation Off

To turn off all concatenation, enter:

```
MP-AID CONCATENATION OFF;
```

Note:

If you set up a new list of concatenated MP-AIDs using the MP-AID CONCATENATION command, any previous concatenation is automatically lost.

MP-AID CONCATENATION Syntax

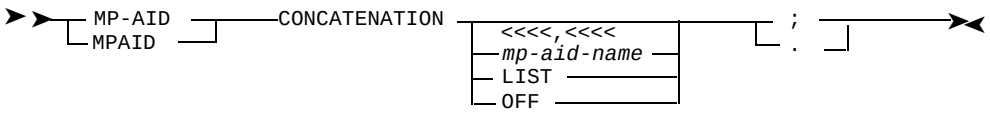

where *mp-aid-name* is the logical name of an MP-AID to be concatenated.

MP-AID DIAGNOSE

MP-AID DIAGNOSE checks the integrity of the MP-AID, and repairs any MP-AID inconsistencies. Refer to "MP-AIDE DIAGNOSE Syntax" on page 68 for the syntax of the MP-AID DIAGNOSE command.

Use the MP-AID DIAGNOSE command to make regular checks on the MP-AID (to ensure integrity) and to repair any inconsistencies detected. As Systems Administrator, you can:

- Check the integrity of your primary and secondary MP-AIDs
- Repair inconsistencies that are found (on your primary MP-AID only)

If an inconsistency is of more than one type, only the most fundamental type is reported if possible.

Checking the Integrity of the MP-AID

To check the integrity of the MP-AID, enter:

```
MP-AID DIAGNOSE;
```

The diagnostic process contains three distinct phases:

1 Validation of the free chain

2 Validation of members and directories

3 MP-AID final validation.

Inconsistencies are detected in phases 1 or 2, and relevant messages, with error codes, are displayed at that time. Summary messages may be issued in phase 3.

To check the integrity of a secondary (concatenated) MP-AID, enter:

```
MP-AID DIAGNOSE CONCATENATION mpaid-name;
```

where *mpaid-name* is the logical name of a secondary MP-AID.

Repairing Inconsistencies on the MP-AID

Use the REPAIR keyword to repair MP-AID inconsistencies. Secondary MP-AIDs cannot be repaired in this way, as access to these is read-only. To repair a secondary MP-AID, you must access it as a primary MP-AID.

To repair MP-AID inconsistencies, enter:

```
MP-AID DIAGNOSE REPAIR;
```

Note:

A repair to one inconsistency may repair another inconsistency as a result. This is possible even if the second inconsistency was reported as non-repairable.

For example, if the last real directory block of one member type has an erroneous pointer to a directory block of another member type, error codes 5 and 17 will be detected and reported. Although error code 5 is not correctable on its own, error code 17 will be corrected by zeroizing the erroneous pointer. Error code 5 will then be corrected as a result.

Before performing an automatic repair, you should always ensure that you have a backup copy of your MP-AID. If for any reason the repair fails to complete, you may need to restore the MP-AID from this backup.

Not all inconsistencies can be automatically repaired. If you still have problems with MP-AID integrity and cannot solve them by other means, contact the ASG Service Desk.

Error Codes Reported by the MP-AID DIAGNOSE Command

Below is a list of error codes that may be displayed as a result of running the MP-AID DIAGNOSE command. Each error code relates to a type of inconsistency, and is displayed if that inconsistency occurs.

Note:

If an asterisk is shown alongside an error code, then the indicated inconsistency can be repaired using the REPAIR keyword.

```
Error Message

* 01     FREE CHAIN DOUBLE BLOCK ALLOCATION
* 02     DIRECTORY BLOCK(S) ALSO ON FREE CHAIN member-type
* 03     DATA BLOCK(S) ALSO ON FREE CHAIN member-type member-name
  04     DATA BLOCK(S) ALSO DIRECTORY BLOCK(S) member-type
           member-name AND member-type DIRECTORY
  05     BLOCK ALLOCATED TO TWO DIRECTORIES member-type AND
           member-type
* 06     DATA BLOCK(S) ALLOCATED TO TWO MEMBERS member-type
           member-name (qualifier) AND member-type member-name
          (qualifier)
* 07     CONTROL RECORD BLOCK COUNT INCORRECT member-type
  08     DATA BLOCK COUNT EXCEEDS ACTUAL BLOCKS member-type
           member-name
  09     DATA BLOCKS EXCEED COUNT IN DIRECTORY member-type
           member-name
* 10     UNALLOCATED BLOCK(S) FOUND
  11     ZERO DATA BLOCKS member-type member-name
* 12     FREE CHAIN BLOCK COUNT INCORRECT
* 13     FREE CHAIN LAST BLOCK POINTER INCORRECT
  14     INVALID RBA member-type member-name
  15     DATA LENGTH MISMATCH member-type member-name
* 16     DIRECTORY ENTRY COUNT EXCEEDS MAXIMUM member-type
* 17     WRONG MEMBER TYPE IN DIRECTORY BLOCK member-type
           member-name
* 18     CONTROL RECORD MEMBER COUNT MISMATCH member-type
* 19     DIRECTORY ENTRY COUNT MISMATCH member-type
```

Examples of Output from the MP-AID DIAGNOSE Command

Example 1: On an MP-AID with no inconsistencies, entering:

```
MP-AID DIAGNOSE;
```

produced this report:

```
DM14120I STARTING MPAID DIAGNOSE AT 11.42.01 ON 25 MAY 1991
DM14121I STARTING VALIDATION OF FREE CHAIN AT 11.42.01
DM14121I STARTING VALIDATION OF MEMBERS AT 11.42.10
DM14123I STARTING MPAID FINAL VALIDATION AT 11.43.13
DM14124I END OF MPAID DIAGNOSE - NO ERRORS DETECTED AT 11.43.23 ON
25 MAY 1991
DM14000I MPAID PROCESSING SUCCESSFUL
```

Example 2: on an MP-AID containing an inconsistency, entering:

```
MP-AID DIAGNOSE;
```

produced this report:

```
DM14120I STARTING MPAID DIAGNOSE AT 11.45.10 ON 25 MAY 1991
DM14121I STARTING VALIDATION OF FREE CHAIN AT 11.45.10
DM14121I STARTING VALIDATION OF MEMBERS AT 11.45.20
        * ERROR  18 - CONTROL RECORD MEMBER COUNT MISMATCH
                      UDS COMPARISON TABLE
DM14123I STARTING MPAID FINAL VALIDATION AT 11.46.23
DM14124W END OF MPAID DIAGNOSE - ERRORS DETECTED AT 11.46.33 ON 25
MAY 1991
        1 ERROR(S) DETECTED - 1 WOULD BE CORRECTED BY REPAIR
DM14000I MPAID PROCESSING SUCCESSFUL
```

Note:

An inconsistency is detected, but no attempt is made to correct it.

Example 3: on the same MP-AID as used in example 2, entering:

```
MP-AID DIAGNOSE REPAIR;
```

produced this report:

```
DM14120I STARTING MPAID DIAGNOSE AT 11.49.50 ON 25 MAY 1991
DM14121I STARTING VALIDATION OF FREE CHAIN AT 11.49.50
DM14121I STARTING VALIDATION OF MEMBERS AT 11.49.59
        * ERROR  18 - CONTROL RECORD MEMBER COUNT MISMATCH
                      UDS COMPARISON TABLE
DM14122I STARTING MPAID REPAIR AT 11.51.03
DM14124W END OF MPAID DIAGNOSE - ERRORS DETECTED AT 11.51.13 ON 25
MAY 1991
        1 ERROR(S) DETECTED - 1 CORRECTED BY REPAIR
DM14000I MPAID PROCESSING SUCCESSFUL
```

MP-AIDE DIAGNOSE Syntax

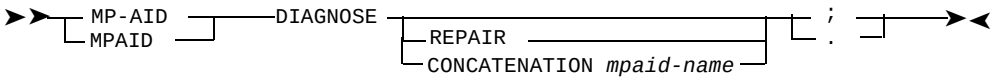

where *mpaid-name* is the name of a secondary (concatenated) MP-AID.

MP-AID EXEC-LIST

MP-AID EXEC-LIST performs a given operation on several MP-AID members at the same time.

The output of the MP-AID EXEC-LIST command is a stripped down and parameterized version of the output from an equivalent MP-AID LIST command. You save this output in an Executive Routine, and execute it with appropriate parameters.

This command provides a list of names of all MP-AID members of the specified category. That is, one of these:

- All MP-AID members available to the user
- All members of a specified type available to the user
- All members of a specified type and associated with a specified Logon Identifier (available only to the Systems Administrator).

Each name is prefixed by the three parameters &P0, &P1, and &P2, and is followed by the parameters &P3, &P4, and &P5.

For example, this command:

```
MP-AID EXEC-LIST EXECUTIVES;
```

might produce this output:

```
&P0 &P1 &P2 EXEC1 &P3 &P4 &P5;
&P0 &P1 &P2 EXEC2 &P3 &P4 &P5;
&P0 &P1 &P2 EXEC3 &P3 &P4 &P5;
```

To save this output as a TRANSIENT member MYEXEC, enter:

```
HOLD MYEXEC;
```

You can then, for example, print the three members using the command:

```
TRANSIENT-EXECUTIVE MYEXEC MP-AID PRINT EXECUTIVE;
```

You could instead have saved the output from the MP-AID EXEC-LIST command in a USER-MEMBER.

To run the MP-AID EXEC-LIST command on a secondary MP-AID, use the CONCATENATION keyword, followed by the logical name of the secondary MP-AID. The output then includes two extra parameters &P6 and &P7, and the output member name is repositioned, between parameters &P4 and &P5.

For example, to produce output for all EXECUTIVE members on the secondary MP-AID named M2120, enter:

```
MP-AID EXEC-LIST CONCATENATION M2120 EXECUTIVES;
```

MP-AID EXEC-LIST Syntax

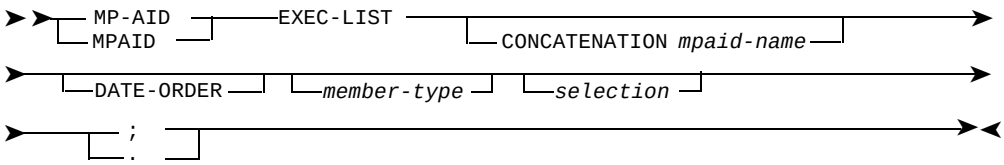

where:

mpaid-name is the logical name of a secondary MP-AID

member-type is:

```
➤──┬─ ALL ──────┬─USER-MEMBERS ──────────────────────────────────────────────➤
   │            │─PUBLIC-USER-MEMBERS─┐
   │            │─TRANSIENTS ─────────┤
   │            │─KEPT-DATA-LISTS─────┤
   │            │─WORKBENCHES ────────┤
   │            │─WBCH ───────────────┤
   │            └─WBDA ───────────────┘
   │
   ├─┬─USER-MEMBERS ──────────────────┬──────────────────────────────────────┤
   │ │─PUBLIC-USER-MEMBERS─┐          │─logon-identifier─┘
   │ │─TRANSIENTS ─────────┤          │
   │ │─KEPT-DATA-LISTS─────┤          │
   │ │─WORKBENCHES ────────┤          │
   │ │─WBCH ───────────────┤          │
   │ └─WBDA ───────────────┘          │
   │                                  │
   └─┬─EXECUTIVES ────────────────────┤
     │─COMMAND ───────────────────────┤
     │─CMND ──────────────────────────┤
     │─PROFILES───────────────────────┤
     │─INFOBANK───────────────────────┤
     │─FORMATS────────────────────────┤
     │─TRANSLATION-RULES──────────────┤
     │─TR-RULES───────────────────────┤
     │─TRUL───────────────────────────┤
     │─UDS-TABLES─────────────────────┤
     │─UDST───────────────────────────┤
     │─UDS-COMPARISON-TABLES──────────┤
     │─UDSC───────────────────────────┤
     │─VARIABLE-POOLS─────────────────┤
     └─VBPL───────────────────────────┘
```

logon-identifier is the logon identifier of a specific user.

selection is:

```
➤──┬──┬─FROM string1─┬─┬─TO string2─┬──────────────────────────────────────➤
   │  └─────────────┘ └────────────┘│
   └─ONLY string──────────────────────┘
```

where *string1*, *string2*, and *string* specify the range of the MP-AID members to be selected, and can be from 1 to 10 characters.

MP-AID LIST

MP-AID LIST lists members held on a primary or secondary MP-AID. Refer to "MP-AID LIST Syntax" on page 76 for the syntax of the MP-AID LIST command.

Use the MP-AID LIST command to list all members held on the primary MP-AID, by entering either:

```
MP-AID LIST;
```

or

```
MP-AID LIST ALL;
```

You can also use the MP-AID LIST command to list:

- Selected member types
- Members added by a specific user
- Members in date order
- Members selected by name
- Members contained on a secondary MP-AID.

Description of Output

Output produced by any variant of the MP-AID LIST command provides the following information for each member listed:

NAME	Member name
TYPE	Member type
DATE and TIME	Date and time the member was added to the MP-AID or last updated
BLOCKS	Number of MP-AID logical blocks used to hold the member

If you list all member types, only the above information is provided.

If you list members held on a secondary MP-AID, the logical name of that MP-AID is displayed as part of the heading.

If you list members contained on all secondary MP-AIDs, then additional output is generated, showing the origin of the members listed.

If you specify a member type, some additional information may be output, depending upon the member type. Details are given in the following paragraphs.

For USER-MEMBERs these additional details are output:

- The number of records (that is, the number of lines of text the member contains)
- The Logon Identifier of the user who created that member
- A public member type is preceded by a P

For TRANSIENT and KEPT-DATA members these additional details are output:

- The number of records (that is, the number of lines of text the member contains)
- The user's Logon Identifier.

For EXECUTIVE members these additional details are output:

- The number of records (the number of lines of text the member contains)
- The Access Control level indicated under the column headed SEC-LEV (Access Control levels can be specified in EXECUTIVE members, but they have practical value only if the Systems Administrator's Environmental Control facility is installed.)

For COMMAND members, information giving the version and release number for each COMMAND member, under the column headed VRRR, is also given.

For LOGON-PROFILE members these additional details are output:

- The Logon usage indication SHR or EXC (that is, shared or exclusive)
- The Logon counter, shown under the heading COUNT. This is the cumulative logon count, giving the number of times the LOGON-PROFILE has been used to log on since being added to the MP-AID, or since the last CONSTRUCT PROFILE ALL command. This counter is related to, but different from, the internal counter which is incremented when a shared Logon Profile is invoked and decremented as a result of the user logging off.
- The Logon password specified in the PROFILE (preceded by an asterisk if a user is currently logged on).

For GLOBAL-PROFILE members the Logon usage indication GBL (that is, global) is also given.

For INFOBANK members these additional details are output:

- The change-reference string specified if an MP-AID FLAG command has been entered for the member
- The panel restriction-level indicator which precedes the member type INFO: Systems Administrator (S), Controller (C), or Master Operator (O).

For UDS-TABLE members these additional details are output:

- The origin of the UDS table, being either a load module or a (primary) UDS-TABLE member of the MP-AID
- The repository to which the table is assigned, displayed under the heading IN-USE-BY (output only for a secondary UDS-TABLE member).

For UDS-COMPARISON-TABLE members these details are also output:

- The name of the UDS table with which the currently named UDS table has been compared, indicated under the heading COMP-NAME
- The result of the comparison, indicated under the heading RESULT (either compatible, or requiring some re-encoding of the repository member(s) for compatibility, or incompatible).

For WORKBENCH members these additional details are output:

- The user's Logon Identifier
- The Workbench Design Area (WBDA) usage

Listing Selected Member Types

To list members of a selected type, enter:

```
MP-AID LIST member-type;
```

where *member-type* can be COMMANDS, EXECUTIVES, FORMATS, INFOBANK, KEPT-DATA-LISTS, PROFILES, PUBLIC-USER-MEMBERS, TRANSIENTS, TRANSLATION-RULES, UDS-TABLES, UDS-COMPARISON-TABLES, USER-MEMBERS, WBDA, or VARIABLE-POOLS.

Note:

To list the above member types, you need the functions allowing you to create these member types.

Listing Members Added by a Specific User

To list members added by a specific user, enter:

```
MP-AID LIST member-type logon-id;
```

where:

member-type is USER-MEMBERS, PUBLIC-USER-MEMBERS, TRANSIENTS, KEPT-DATA-LISTS, or WBDA.

logon-id is the Logon Identifier of the user whose members are to be listed.

For example, to list all USER-MEMBERs added by any user with Logon Identifier BILL, enter:

```
MP-AID LIST USER-MEMBERS BILL;
```

To list all your own USER-MEMBERs, if your Logon Identifier is SYSAD, enter either:

```
MP-AID LIST USER-MEMBERS SYSAD;
```

or

```
MP-AID LIST USER-MEMBERS;
```

Listing Members in Date Order

To list MP-AID members in date order, with the most recently created/updated members listed first, enter:

```
MP-AID LIST DATE-ORDER;
```

For example, to list all USER-MEMBERs, for your Logon Identifier, in date order, enter:

```
MP-AID LIST DATE-ORDER USER-MEMBERS;
```

Listing Members within a Given Alphanumeric Range

To list all members for all member types beginning with a specified string, enter:

```
MP-AID LIST ONLY string;
```

For example, to list all MP-AID members for the current Logon Identifier beginning with characters RE, enter:

```
MP-AID LIST ONLY RE;
```

Alternatively, to select the member names to be listed for all member types in a specified range, enter:

```
MP-AID LIST FROM string1 TO string2;
```

For example, to list all members in the range G to TEST inclusive, enter:

```
MP-AID LIST FROM G TO TEST;
```

In the above example:

- Members GROUP-A and TESTBOOK would be included, but members FETCH and TRAIL would be excluded
- If you omit FROM G, all members up to and including TEST are selected
- If you omit TO TEST, all members from G onwards are selected.

Listing Members on a Secondary MP-AID

To list members contained on a secondary (concatenated) MP-AID, enter:

```
MP-AID LIST CONCATENATION mpaid-name member-selection;
```

where:

mpaid-name is the logical name of a secondary MP-AID from which the member(s) are to be listed

member-selection specifies the required members (selected by type, date order, alphanumeric range, or creator, as in a normal MP-AID LIST command).

For example, to list all WBDA members on the MP-AID DEV1, enter:

```
MP-AID LIST CONCATENATION DEV1 WBDA;
```

To list members held on all secondary MP-AIDs, enter:

```
MP-AID LIST ALL-CONCATENATIONS member-selection;
```

Which Users Can List Which Members

User Type Member Type	All users	Designated or Host Controller	Systems Administrator
COMMAND	No	No	Yes
EXECUTIVE	Yes	Yes†	Yes
FORMAT	Yes	Yes	Yes
INFOBANK	No	No	Yes
KEPT-DATA	Yes‡	Yes‡	Yes
PROFILE	No	No	Yes
TRANSIENT	Yes‡	Yes‡	Yes
TRANSLATION-RULE	Yes	Yes	Yes
UDS-TABLE	No	Yes	Yes
UDS-COMPARISON-TABLE	No	Yes	Yes
USER-MEMBER	Yes‡	Yes‡	Yes
VARIABLE-POOL	No	No	Yes
WORKBENCH	Yes	Yes	Yes

† Only those members for which the user has been assigned the appropriate Access Control Levels, when the Systems Administrator's Environmental Control Facility is installed.

‡ Only those members that were added by the user who is logged on or by another user who shares the same Logon Identifier.

MP-AID LIST Syntax

```
>>─┬─ MP-AID ─┬──────LIST ──────────────────────────────────────────────>
   └─ MPAID ──┘                  ├── CONCATENATION mpaid-name──┤
                                 └── ALL-CONCATENATIONS ───────┘

>──┬──DATE-ORDER──┬──┬──member-type──┬──┬──selection──┬──────────────────>
   └──────────────┘  └───────────────┘  └─────────────┘

>──┬──;──┬──────────────────────────────────────────────────────────>><
   └──.──┘
```

where:

mpaid-name is the logical name of a secondary MP-AID

member-type is:

```
➤── ALL ──┬──USER-MEMBERS ──────────────
```

MP-AID PRINT

MP-AID PRINT displays the contents of MP-AID members. Refer to "MP-AID PRINT Syntax" on page 81 for the syntax of the MP-AID PRINT command.

You can use the MP-AID PRINT command to display the contents of:

- USER-MEMBERs
- TRANSIENT members
- EXECUTIVE members
- PROFILE members
- KEPT-DATA members.

The Systems Administrator can print any user's USER-MEMBER, TRANSIENT, or KEPT-DATA members, by entering one of these commands:

```
MP-AID PRINT USER-MEMBER member logon-id;
```

```
MP-AID PRINT TRANSIENT member logon-id;
```

```
MP-AID PRINT KEPT-DATA-LIST member logon-id;
```

where:

member is the name of an MP-AID member

logon-id is the Logon Identifier of a specific user; if you do not specify this, you will obtain a print only if you have named one of your own members in the command (as for any other user).

To print any MP-AID EXECUTIVE member, regardless of the Access Control level, enter:

```
MP-AID PRINT EXECUTIVE member-name;
```

To print any MP-AID PROFILE member, enter:

```
MP-AID PRINT PROFILE member-name;
```

You *cannot* use the MP-AID PRINT command to determine the contents of:

- COMMAND members
- FORMAT members
- INFOBANK members
- TRANSLATION-RULE members
- UDS-TABLE members
- UDS-COMPARISON-TABLE members
- WORKBENCH members.

To determine the contents of some of these types of MP-AID members (such as FORMAT, TRANSLATION-RULE, or primary UDS-TABLE members), use the PRINT or REPORT commands to interrogate the Manager Products Administration Dictionary members from which they were constructed. You can also use the SHOW UDS command, for primary UDS-TABLE members.

For secondary UDS-TABLE members and UDS-COMPARISON-TABLE members, use the MP-AID LIST command to obtain the basic information.

You can also use the MP-AID PRINT command to print members held on a secondary (concatenated) MP-AID. You can print any member held on a secondary MP-AID that you can print on the primary MP-AID.

Printing Members Held on a Secondary MP-AID

To print a member contained on a secondary (concatenated) MP-AID, enter:

`MP-AID PRINT CONCATENATION` *`mpaid-name member-type member-name`*`;`

where:

`mpaid-name` is the logical name of a secondary MP-AID

`member-type` is either USER-MEMBER, TRANSIENT, KEPT-DATA-LIST, EXECUTIVE, or PROFILE

`member-name` is the name of the member to be printed.

To print a member held on any MP-AID, primary or secondary, enter:

`MP-AID PRINT ANY-CONCATENATION` *`member-type member`*`;`

If members on different MP-AIDs have the same name, then the member on the MP-AID occurring first in the search sequence is printed. The search sequence is defined by the Systems Administrator when concatenation is established.

Refer to the MP-AID CONCATENATION command for details of how to find out which MP-AIDs (if any) you can access via concatenation.

Examples of the MP-AID PRINT Command

To print USER1, a USER-MEMBER owned by user FRED, enter:

```
MP-AID PRINT USER-MEMBER USER1 FRED;
```

To print your own USER-MEMBER named USER1, enter either:

```
MP-AID PRINT USER-MEMBER USER1 SYSAD;
```

or

```
MP-AID PRINT USER-MEMBER USER1;
```

To print a Corporate Executive routine, named CALC2, held as an EXECUTIVE member on a secondary MP-AID accessed with a logical name of M2012, enter:

```
MP-AID PRINT CONCATENATION M2012 EXECUTIVE CALC2;
```

Which Users Can Print Which Members

User Type Member Type	All users	Designated or Host Controller	Systems Administrator
COMMAND	No	No	Yes
EXECUTIVE	Yes†	Yes†	Yes
FORMAT	No	No	No
INFOBANK	No	No	No
KEPT-DATA	Yes‡	Yes‡	Yes
PROFILE	No	No	Yes
TRANSIENT	Yes‡	Yes‡	Yes
TRANSLATION-RULE	No	No	No
UDS-TABLE	No	No	No
UDS-COMPARISON-TABLE	No	No	No
USER-MEMBER	Yes‡	Yes‡	Yes
VARIABLE-POOL	No	No	No
WORKBENCH	No	No	No

† Only those members for which the user has been assigned the appropriate Access Control Levels, when the Systems Administrator's Environmental Control Facility is installed.

‡ Only those members that were added by the user who is logged on or by another user who shares the same Logon Identifier.

MP-AID PRINT Syntax

```
>>─┬─ MP-AID ─┬──PRINT ──┬──────────────────────────────────────────┬──>
   └─ MPAID ──┘          │─── CONCATENATION mpaid-name ─────────────│
                         └─── ANY-CONCATENATION ────────────────────┘

>─┬─ USER-MEMBER ──┬──────── member ──┬──────────────────────┬──────┬─ ; ─┬──>><
  ├─ TRANSIENT ────┤                  └─ logon-id ───────────┘      └─ . ─┘
  ├─ KEPT-DATA-LIST ┘
  ├─ EXECUTIVE ──┬──────── member ──────────────────────────┘
  └─ PROFILE ────┘
```

where:

mpaid-name is the logical name of a secondary MP-AID

member is the name of the MP-AID member to be printed

logon-id is the Logon Identifier of the user owning the member to be printed.

MP-AID STATUS

MP-AID STATUS determines the current status of a primary or secondary MP-AID.

To determine the current status of the primary MP-AID, enter: `MP-AID STATUS;`.

To determine the status of a secondary (concatenated) MP-AID, enter: `MP-AID STATUS CONCATENATION` *`mpaid-name`*`;`.

where *`mpaid-name`* is the logical name of a secondary MP-AID.

The report output contains this information:

- The number of current MP-AID members of each type and the total number of members
- The access method, either BDAM, VSAM, or DIV
- The version and release number of the MP-AID
- The mode, either READ-ONLY or UPDATE
- The current status, either enabled or disabled
- The details of shared usage support, using ENQUEUE, RESERVE, or LOCK Services
- The number of free MP-AID logical blocks currently available
- The number of MP-AID logical blocks currently used
- The date and time the MP-AID was created and the logical and physical blocksizes specified
- The number of updates performed on the MP-AID
- The date and time of the last reload, if any
- The date and time of last backup taken via MP-AID UNLOAD, if any, or a string as defined via the last MP-AID BACKUP-DETAILS command issued, if any.

When you use this command on a secondary (concatenated) MP-AID, the output also includes the logical name of the MP-AID, in parentheses, as part of the heading line. Further, backup details relate only to an UNLOAD of the MP-AID when accessed as a primary read/write MP-AID; an UNLOAD of a secondary MP-AID will not be reflected in the output.

MP-AID STATUS Syntax

```
>>─┬─ MP-AID ─┬──STATUS ──┬──────────────────────────────────┬──>
   └─ MPAID ──┘           └─ CONCATENATION mpaid-name ───────┘

>──┬─ ; ─┬──────────────────────────────────────────────────>><
   └─ . ─┘
```

where *mpaid-name* is the logical name of a secondary MP-AID.

7 MP-AID Backup, Reconfiguration, and Copying

This chapter includes these sections:

MP-AID Backup 85

Reconfiguring the MP-AID 87
Procedure 1 87
Procedure 2 87
Procedure 3 87

Copying Members from the MP-AID 88

Unloading, Loading, and Reloading the MP-AID 88
MP-AID UNLOAD. 89
MP-AID RELOAD 92
MP-AID LOAD 93

MP-AID BACKUP-DETAILS 97

Effect of Backup and Reconfiguration on MP-AID Date and Time Records 98

MP-AID Backup

The major purpose of the MP-AID UNLOAD command is to provide MP-AID backups. You should take backups frequently, perhaps once a day, so that an up-to-date copy of the MP-AID is always available if the MP-AID becomes unavailable or unusable. Recovery is normally affected by means of the MP-AID RELOAD command, but you can obtain the same effect with the MP-AID CREATE or (VCREATE for DIV MP-AID) followed by an MP-AID LOAD command. ASG recommends using the MP-AID RELOAD command, which is faster.

The MP-AID UNLOAD command provides a complete copy of the MP-AID unless an MP-AID member type is specified in the command, in which case only those members comprising the specified member type are copied. It is suggested that you use MP-AID UNLOAD for taking backups in preference to using external dump facilities, for these reasons:

- Only ControlManager can ascertain whether the MP-AID's preformatted blocks have been utilized. ControlManager does not dump the unused blocks. Thus, the MP-AID UNLOAD command can be quicker than other utilities when dumping a partially utilized MP-AID.
- ControlManager ensures that there is no concurrent updating while an MP-AID UNLOAD command is being processed.
- For a DIV MP-AID, in use under MPSF, you can UNLOAD an MP-AID at any time during execution of the server. If you use an external dump facility, then you must first terminate MPSF. Further, under MPSF, you can automate the backup process, by running the MP-AID UNLOAD command at intervals defined by the Systems Administrator. Refer to the *ASG-Manager Products Server Facility User's Guide* for further details.

If, *in OS environment*s, an external dump utility is used to take backup copies, you should ensure that there is no concurrent ControlManager updating run. This can be achieved by including DISP=OLD in the job control statement for the MP-AID (see *ASG-Manager Products Installation in OS Environments*) or by use of the MP-AID DISABLE command.

DOS users should not use their operating system's dump utility, as it is not suitable for taking MP-AID backups. (A DOS MP-AID dataset has user labels.)

You can use the MP-AID BACKUP-DETAILS command to document an externally taken backup in the output of the MP-AID STATUS command.

For details of the MP-AID CREATE command, refer to "The MP-AID" on page 11. For details of the MP-AID DISABLE command, refer to "The MP-AID DISABLE Command" on page 102. For details of the MP-AID UNLOAD command, refer to "Unloading, Loading, and Reloading the MP-AID" on page 88.

For details of the MP-AID VCREATE command refer to the *ASG-Manager Products Server Facility User's Guide*.

Reconfiguring the MP-AID

You can reconfigure the MP-AID using one or more of the procedures described in this section.

Procedure 1

By entering the MP-AID UNLOAD command followed by an MP-AID RELOAD command, you can reorganize the content of the MP-AID so that any physically fragmented information relating to a member is brought together and the members' data blocks are arranged sequentially. Such fragmentation can be caused by previous modification of the data; reorganization makes for more efficient access to the MP-AID.

You can reorganize the MP-AID content for a particular member type (rather than the entire MP-AID) by specifying the member type in the MP-AID UNLOAD command and entering an MP-AID LOAD command for that member type. In either case, whether or not a member type is selected, it is the MP-AID UNLOAD command that effects the reordering of the data as written to the MP-AID UNLOAD dataset. Thus, a subsequent MP-AID RELOAD or LOAD command, when executed, always results, respectively, in a fully or partially reorganized MP-AID.

Procedure 2

You can change the blocksize for the MP-AID by entering the MP-AID UNLOAD command, specifying a new blocksize in a subsequent MP-AID CREATE/VCREATE command, and then entering an MP-AID LOAD ALL command or a series of MP-AID LOAD commands, one for each member type in the MP-AID. For a DIV MP-AID you can only change the logical blocksize. The physical blocksize is automatically calculated by the MP-AID VCREATE command.

You will find the output of the MP-AID LIST command helpful in determining the need for such a change because, for each MP-AID member listed, the number of blocks used for it is given. (Changing blocksize results automatically in a reorganized MP-AID due to use of the MP-AID UNLOAD command. See "Procedure 1" on page 87.)

Procedure 3

Provided that you do not want to change the blocksize, you can increase or decrease the space allocated to the MP-AID by entering an MP-AID UNLOAD command followed, in a subsequent run with suitably altered job control, by an MP-AID RELOAD command. Similarly, you can convert the MP-AID from BDAM to VSAM or from VSAM to BDAM (except in CMS environments, where only BDAM MP-AIDs are supported by ControlManager) without changing blocksize by entering MP-AID UNLOAD followed by MP-AID RELOAD with altered job control.

An MP-AID UNLOAD of a DIV MP-AID cannot be used as input to an MP-AID RELOAD if the access method of the new MP-AID is BDAM or VSAM. Similarly, you cannot use an MP-AID UNLOAD of a BDAM or VSAM MP-AID to build a DIV MP-AID using the MP-AID RELOAD command. A description of the required job control appears in your Manager Products installation manual. For a DIV MP-AID refer to the *ASG-Manager Products Server Facility User's Guide*.

If, in performing either of these functions (altering the MP-AID space allocation or converting from BDAM to VSAM or from VSAM to BDAM), you also want to change the blocksize, then you must instead use procedure 2. That is, you must substitute an MP-AID CREATE/VCREATE command and a series of MP-AID LOAD commands for the MP-AID RELOAD command. (The job control changes pertinent to the function being performed would appear in the run in which the MP-AID CREATE command is executed.)

For details of the MP-AID CREATE command, see "The MP-AID" on page 11.

For details of the MP-AID VCREATE command refer to the *ASG-Manager Products Server Facility User's Guide*.

Copying Members from the MP-AID

There is the occasional need for copying all members of a given member type to an output dataset and subsequently either replacing the copied data or transferring the data to another MP-AID.

You can do this by entering an MP-AID UNLOAD command for a specific member type and a subsequent MP-AID LOAD command for the same member type. You may, for example, wish to delete a number of members of a given type. It would be wise to make a copy of all the members before you delete any of them in case you mistakenly remove members you wish to retain (essentially a partial backup situation).

Another illustration is provided by the MP-AID startup procedure in which you must use the MP-AID LOAD command to add ASG-supplied INFOBANK and EXECUTIVE members to a newly created MP-AID.

Unloading, Loading, and Reloading the MP-AID

The MP-AID UNLOAD, LOAD, and RELOAD commands are not available when executing under CICS. Since all are updating commands (each causes at least one MP-AID date and time record to be updated), they are not normally accepted when the MP-AID is open in read-only mode.

There is one exception to this rule. You can perform the MP-AID UNLOAD command on secondary (concatenated) MP-AIDs that are open in read-only mode. However, the latest backup date and time details are not updated, so output from a subsequent MP-AID STATUS command will not reflect the backup. You should therefore not use this facility as part of your normal backup procedure; ASG recommends that this facility is only used to transfer MP-AID members from a secondary MP-AID to the primary MP-AID.

- MP-AID UNLOAD is rejected if the MP-AID is empty.
- MP-AID RELOAD is accepted only if the input MP-AID UNLOAD dataset was written with no member type selection on the MP-AID UNLOAD command.
- MP-AID LOAD requires a previously executed MP-AID UNLOAD, with or without a member type selection.

All three commands require additional job control to define the output MP-AID UNLOAD dataset (for the MP-AID UNLOAD command) or the input MP-AID UNLOAD dataset (for the MP-AID LOAD or MP-AID RELOAD command). However, only MP-AID RELOAD requires modification of the normal job control needed to run the software. The job control for MP-AID RELOAD is the same as that required for the MP-AID CREATE/VCREATE command (for details refer to your Manager Products installation manual). Refer to *ASG-Manager Products Server Facility User's Guide* for DIV MP-AID information.

MP-AID UNLOAD

MP-AID UNLOAD copies the contents of a primary or secondary MP-AID to an output dataset. Refer to "MP-AID UNLOAD Syntax" on page 91 for the syntax of this command.

Use the MP-AID UNLOAD command to copy all or part of a primary or secondary MP-AID, except TRANSIENT members, to an MP-AID UNLOAD output dataset.

To unload the entire primary MP-AID, enter:

```
MP-AID UNLOAD;
```

Any previous contents of the output dataset are overwritten. You cannot unload an empty MP-AID; the command is rejected unless there is at least one member on the MP-AID.

A complete copy of the MP-AID is written, including the Systems Administrator's logon identifier, password, and all relevant control dates and times. The current date and time is recorded on the MP-AID as the date and time of the latest MP-AID backup.

The number of MP-AID members of each type written to the MP-AID UNLOAD dataset is printed. You can also print a message for each member that is unloaded, giving the member type, name and qualifier, by entering:

```
MP-AID UNLOAD PRINT;
```

Unloading Specific MP-AID Member Types and Members

To unload a specific member type or list of member types, enter:

```
MP-AID UNLOAD member-type-list;
```

where *member-type-list* is a list of MP-AID member types to be unloaded. The member types are written, plus any control date and time which may be recorded for the member type. However, no general information about the MP-AID (such as the Systems Administrator's logon identifier) is copied and the MP-AID backup date and time is not updated.

To unload specific members, enter:

```
MP-AID UNLOAD member-type MEMBERS member-name-list;
```

where:

member-type is a specific MP-AID member type

member-name-list is a list of MP-AID members separated by commas.

You can unload several different types of member in one command. For example, to unload EXECUTIVE members F1 and F2, and INFOBANK-PANEL members G3 and G4, enter:

```
MP-AID UNLOAD EXEC MEMBERS F1, F2 INFO MEMBERS G3, G4;
```

You can unload those MP-AID members that belong to specific logon IDs; that is, KEPT-DATA LISTS, USER-MEMBERS, and WORKBENCHES. To do so, enter:

```
MP-AID UNLOAD member-type LOGON-ID logon-id;
```

or

```
MP-AID UNLOAD member-type MEMBERS member-name-list LOGON-ID
logon-id;
```

where *logon-id* identifies the owner of the members to be unloaded.

For example:

```
MP-AID UNLOAD USER MEMBERS A, B, C LOGON-ID SYSAD;
```

unloads USER-MEMBERS members A, B, and C belonging to logon ID SYSAD.

Unloading a Secondary MP-AID

To unload a secondary (concatenated) MP-AID, enter:

```
MP-AID UNLOAD CONCATENATION mpaid-name;
```

where *mpaid-name* is the logical name of the secondary MP-AID.

To unload specific members/member-types on a secondary MP-AID, enter:

```
MP-AID UNLOAD CONCATENATION mpaid-name member-type
                            MEMBERS member-name-list;
```

MP-AID UNLOAD Syntax

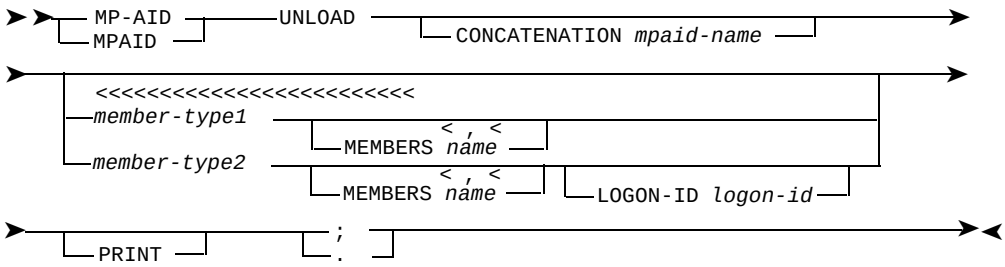

where:

mpaid-name is the logical name of a secondary MP-AID.

member-type1 is:

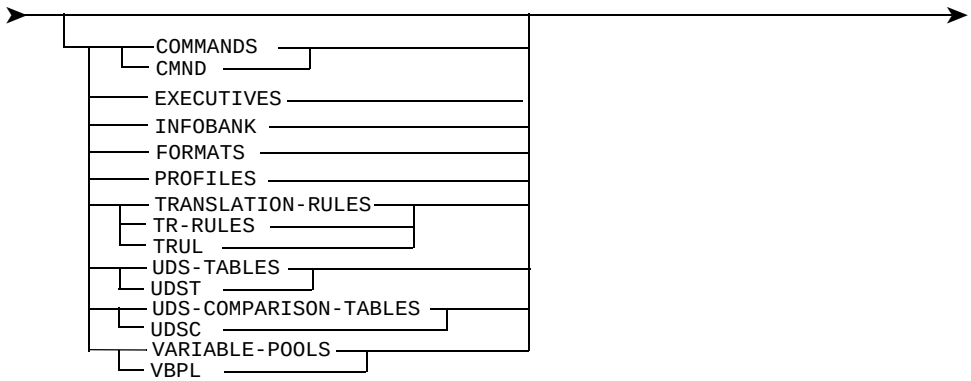

member-type2 is:

name is the name of an MP-AID member you wish to unload

logon-id is the logon ID whose members you wish to unload.

MP-AID RELOAD

When entering an MP-AID RELOAD command, you must specify the password that is contained in the input MP-AID UNLOAD dataset. This is required even if you have changed your password (via the MP-AID PASSWORD or MP-AID CREATE\VCREATE command) since the MP-AID UNLOAD dataset was written.

The MP-AID whose content was UNLOADed is reinitialized and RELOADed with its old date and time records unaltered, including its original date and time of creation. The only record updated is the date and time of the last MP-AID RELOAD, which is changed to the current date and time.

Other possible changes in the reloaded MP-AID include these:

- If the MP-AID was DISABLEd before it was UNLOADed, the MP-AID RELOAD processing causes it to be automatically re-ENABLEd
- MP-AID PROFILE and USER-MEMBERs with in-use or update-in-progress flags or counters set when the MP-AID was UNLOADed, are automatically reset as part of the RELOAD processing.

On the other hand, if the MP-AID was subject to the effect of an MP-AID CONTROL command when it was UNLOADed, that effect is not lost during RELOAD processing.

The output for the MP-AID RELOAD command is the number of members of each type that have been written from the input dataset to the reinitialized MP-AID.

Normally, you enter the MP-AID RELOAD command in a batch run (as with the MP-AID CREATE or VCREATE command).

For details of the MP-AID date and time records refer to "Effect of Backup and Reconfiguration on MP-AID Date and Time Records" on page 98. For details of the MP-AID DISABLE and MP-AID ENABLE commands refer to Chapter 8, "Miscellaneous Commands," on page 99. For details of how to reset MP-AID members refer to "Resetting MP-AID Members" on page 47.

This is the syntax of the MP-AID RELOAD command for a BDAM or VSAM-organized MP-AID:

```
>>─┬─ MP-AID ─┬──────RELOAD ──────PASSWORD password ──────────────────>
   └─ MPAID ──┘
>──┬──────────────────────────────┬──┬──────────────────────────────><
   └─ PHYSICAL-BLOCKSIZE nnnnn ───┘  └─ ; ─┬──────────────────────┬─┘
                                           └─ . ──────────────────┘
```

where:

`password` conforms to the rules governing delimited and undelimited names

`nnnnn` is an integer specifying physical blocksize.

For a DIV-organized MP-AID, refer to *ASG-Manager Products Server Facility User's Guide*.

MP-AID LOAD

The purpose of the MP-AID LOAD command is to load all or selected members on to the MP-AID from an input MP-AID UNLOAD dataset.

When `mpaid-member-type` is followed by the optional keyword MEMBERS, the `mpaid-member-name`s listed after the MEMBERS clause are LOADed to the MP-AID. Any number of names can be listed in the clause; each name except the first in the list must be preceded by a comma and can optionally be preceded by spaces.

If you are loading members of type KEPT-DATA-LIST, USER-MEMBER, or WORKBENCH, you can choose to load only those members that belong to a particular logon ID. To do so, enter the keyword logon ID after the mpaid member-type or member-name-list, followed by the required logon ID.

Further, you can specify a new logon ID that will be used when writing to the MP-AID members belonging to the old logon ID; to do so, specify the new logon ID immediately after the old one. Existing members on the MP-AID belonging to the old logon ID are retained. Any valid new logon ID is acceptable; it need not exist as a LOGON-PROFILE member on the MP-AID.

The ANALYSIS-ONLY option is provided so that you can analyze the contents of the input dataset without physically loading its contents to the MP-AID. PRINT/NO-PRINT/REPLACE etc. may not be included in the same LOAD command as ANALYSIS-ONLY.

The MP-AID LOAD command can optionally contain one of the following keywords:

- PURGE, which deletes all existing MP-AID members of the specified mpaid-member-type and adds all members of that type on the input dataset to the MP-AID.
- ADD, which adds members from the input dataset of the specified mpaid-member-type if they do not already exist.
- REPLACE, which replaces members already on the MP-AID with the specified mpaid-member from the input dataset and adds any that are new.

and/or

- PRINT, which outputs a message for every member loaded to the MP-AID: DM08882 for new members added, and DM08883 for members replaced.
- NO-PRINT/NOPRINT, which suppresses output from the MP-AID LOAD command, but gives a total number of all mpaid-member-types that have been loaded.

If no PURGE, ADD, or REPLACE option is specified, ADD is the default. If no PRINT or NOPRINT is specified, NOPRINT is the default. If two optional keywords are present, they can be in any order.

Output when ANALYSIS-ONLY is specified (in an MP-AID LOAD command) is a list taken from the contents of the MP-AID UNLOAD input dataset. The list has a similar format to the MP-AID LIST command. A description of the contents of most of the fields output can be found in the MP-AID LIST documentation with the exception of the QUALIFIER field, which is described below.

The QUALIFIER field contains details of the ownership of each listed member where the member is of a member type to which such information is relevant, for example:

- For USER-MEMBERs the qualifier will be the logon ID of the user who created that member.
- UDS-Table (secondary) will indicate which dictionary the UDS Table is assigned to.

For members of a member type to which no ownership details pertain, the QUALIFIER field will be filled with asterisks (*).

Examples of the MP-AID LOAD Command

These MP-AID LOAD commands can be used to load member types onto the MP-AID:

```
MP-AID LOAD INFOBANK EXECUTIVE;
```

loads all INFOBANK and EXECUTIVE member types on to the MP-AID and deletes all the existing INFOBANKS and EXECUTIVES on the MP-AID with NO-PRINT as default.

```
MP-AID LOAD KEPT LOGON-ID SYSAD;
```

loads all members of type KEPT-DATA-LIST which belong to logon ID SYSAD.

```
MP-AID LOAD KEPT LOGON-ID SYSAD NEW-LOGON-ID NEWSYSAD;
```

loads the same members from the example immediately above, but assigns them to logon ID NEWSYSAD instead of to SYSAD. Any existing members belonging to SYSAD are retained, however.

```
MP-AID LOAD INFO MEMBERS A,B,C PRINT REPLACE;
```

loads selectively INFOBANK members A,B,C on the MP-AID (if they do not already exist) or replaces them if they do exist, and outputs a list of all members loaded and the action taken on them.

```
MP-AID LOAD EXEC ANALYSIS-ONLY;
```

outputs what EXECUTIVES are present on the input dataset without actually loading the EXECUTIVES on to the MP-AID.

```
MP-AID LOAD INFO USER EXEC ANALYSIS-ONLY;
```

This example is the same as the one above. It shows what INFOBANK, USER-MEMBERS, and EXECUTIVES are present on the input dataset but the output will include qualifiers.

```
MP-AID LOAD EXEC MEM A,B,C INFOBANK PURGE;
```

deletes all previously existing EXECUTIVE and INFOBANK members and loads selectively EXECUTIVE members A,B,C and all INFOBANK members on to the MP-AID.

MP-AID LOAD Syntax

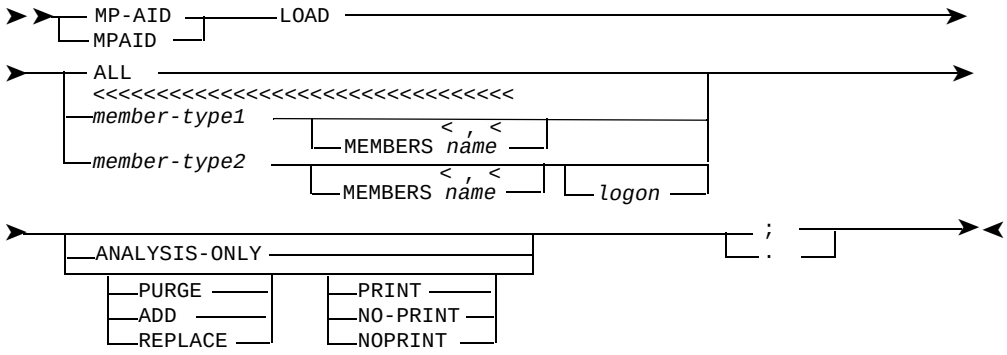

where:

member-type1 is:

```
➤──┬──────────────
```

MP-AID BACKUP-DETAILS

You can obtain a backup of the MP-AID without using the MP-AID UNLOAD command, by using dump facilities external to Manager Products software.

The MP-AID UNLOAD command automatically writes an UNLOAD date and time record in the MP-AID which is displayed in the output of subsequent MP-AID STATUS commands, this way:

```
BACKUP TAKEN VIA UNLOAD ON date AT time;
```

Since this does not occur when a backup is obtained using external facilities, the MP-AID BACKUP-DETAILS command permits you to record that such an external backup has been taken. It is suggested that this be done immediately following such a backup to ensure the accuracy of the MP-AID STATUS output. You might, for example, enter the string:

```
SYSTEM BACKUP 97/06/23 AT 1700;
```

Such a string would appear in the output of any subsequent MP-AID STATUS command until the next MP-AID UNLOAD or BACKUP-DETAILS command were accepted.

It should be noted that MP-AID BACKUP-DETAILS is an updating command and is not accepted if the MP-AID is in read-only mode.

This is the syntax of the command:

```
MP-AID BACKUP-DETAILS string;
```

where *`string`* is a delimited or undelimited character string no more than 32 characters in length.

Effect of Backup and Reconfiguration on MP-AID Date and Time Records

Changes in date and time records are caused by MP-AID LOAD, MP-AID RELOAD, and MP-AID UNLOAD:

- MP-AID UNLOAD updates the date and time of the latest MP-AID backup (where as a selective MP-AID UNLOAD does not).
- MP-AID LOAD causes the current date and time to be recorded for every member (of the specified type) added. The current control date and time record, if present for the member type in the input MP-AID UNLOAD dataset, is retained unchanged. No changes are caused in the MP-AID create backup, or reload date and time records.
- MP-AID RELOAD updates the date and time of the latest MP-AID reload; however, it retains all of the following date and time records present in the input MP-AID UNLOAD dataset:
  - The date and time the MP-AID was created
  - The date and time of the most recent MP-AID backup
  - Any control date and time records appearing for member types which may be constructed onto the MP-AID
  - The date and time record reloaded.

8 Miscellaneous Commands

This chapter includes these sections:

The MP-AID CONTROL CMS Command 99

The MP-AID CONTROL RESERVE Command 101

The MP-AID DISABLE Command. 102

The MP-AID ENABLE Command 103

The MP-AID FLAG Command 103

The MP-AID PASSWORD Command 104

The SET DATASET-REUSE Command 105

The WAIT Command 106

Examples 106

The MP-AID CONTROL CMS Command

The MP-AID CONTROL command is entered in a CMS environment either to initiate or to terminate concurrent access protection for a shared MP-AID. As indicated in an earlier section, to initiate protection, you would define a CMS User ID with two minidisks allocated, one to hold the MP-AID and the other to act as a control disk, and you would enter an MP-AID CONTROL CMS-USER command specifying the User ID and the address of the control disk.

A mini-disk should be exclusively reserved to house the MP-AID; consequently to enable the maximum utilization of the disk, it is suggested that all available space is allocated to the MP-AID.

Protection is provided by the ControlManager software which issues CP LINK commands to the control disk as requests for access to the MP-AID. The effect is similar to the enqueuing protection offered by the OS and DOS macros.

For example, if you want to initiate concurrent access protection with the User ID MP-AID and control disk access 192, you would enter:

```
MP-AID CONTROL CMS-USER MPAID 192;
```

If the command:

```
MP-AID CONTROL CMS-EXCLUSIVE;
```

is executed, all concurrent access protection is terminated. As a consequence, you must ensure that multiple access to the MP-AID is discontinued. This version of the command is rejected if there are any users currently logged on to the MP-AID. You might, for example, want to enter the command if you have copied the MP-AID to a non-shared minidisk.

When a BDAM MP-AID is created in a CMS environment, there is no automatic concurrent access protection provided. Thus an MP-AID CONTROL CMS-EXCLUSIVE command need be executed only to override a preceding MP-AID CONTROL CMS-USER command.

Unless the CP directory has been updated prior to issuing an MP-AID CONTROL CMS command, the command is rejected. A MP-AID CONTROL CMS command is accepted but has no effect in a non-CMS environment

This is the syntax of the command:

```
>>─── MP-AID CONTROL ──┬──CMS-USER user-id cuu ──┬──────────┬── ; ──┬──────>><
                        └──CMS-EXCLUSIVE ─────────┘          └── . ──┘
```

where:

user-id is the CMS user ID which has been allocated a minidisk to hold the MPAID and a mini-disk to act as a control disk

cuu is the address of the control disk consisting of a one-digit channel number and a two-digit unit number.

Refer to your Manager Products installation manual for further details of protecting the MP-AID against concurrent updating.

The MP-AID CONTROL RESERVE Command

The MP-AID CONTROL RESERVE command is entered with one of the keywords, ON or OFF, specified. The command has utility in an OS environment only. It is used to initiate or terminate protection against concurrent updating when two or more OS/390 images have access to the same BDAM or VSAM MP-AID on shared DASD. For a DIV MP-AID, access is restricted to one OS/390 image, and the command, if used is rejected. If you enter:

```
MP-AID CONTROL RESERVE ON;
```

you will cause a RESERVE control indicator to be set in the control record of the MP-AID which extends the range of the ENQ macro to provide protection when users compete for access to the MP-AID from more than one processor. A hardware switch is set on and off which acts to reserve and release control of the volume containing the MP-AID for users of one of the single central processors. Only when the switch is off can users from another processor gain access to the MP-AID.

If the keyword OFF is specified in the command, enqueuing reverts back to the standard protection provided by the ENQ and DEQ macros which prevents updating conflicts only for a given central processor but not between central processors. This could be required, for example, if a shared DASD MP-AID is copied to a device which does not provide shared direct access storage. (Recall that the effect of an MP-AID CONTROL command is not lost during processing of an MP-AID UNLOAD command or a subsequent MP-AID RELOAD command.)

When an MP-AID is created in an OS environment, the ENQ and DEQ macros are utilized automatically without the reserve option on. Thus an MP-AID CONTROL RESERVE OFF command need be executed only to override a preceding MP-AID CONTROL RESERVE ON command.

An MP-AID CONTROL RESERVE command is accepted but has no effect in non-OS environments. The command is disallowed in ROSCOE environments. Successful execution of the command requires that DISP=OLD is specified in the job control.

This is the syntax of the command:

```
>>─── MP-AID CONTROL RESERVE ──┬─ON ─┬──────────┬─ ; ─┬──────────>
                               └─OFF─┘          └─ . ─┘
```

Refer to your Manager Products installation manual for further details of protecting the MP-AID against concurrent updating.

For details of the MP-AID UNLOAD and MP-AID RELOAD commands see Chapter 7, "MP-AID Backup, Reconfiguration, and Copying," on page 85.

The MP-AID DISABLE Command

During periods in which certain maintenance or housekeeping tasks must be performed, you may wish to prevent anyone else from using the system. By entering the MP-AID DISABLE command, you can accomplish two things:

- Except in batch, a specified string is displayed telling currently logged on users to log off. You could, for example, enter:

  ```
  MP-AID DISABLE 'CONTROLMANAGER IS DISABLED UNTIL 1400 HOURS'
  ```

In batch environments, the run is terminated with an appropriate message.

- Users (other than yourself) are prevented from logging on subsequently until you enter a re-enabling command. Instead, this message displays:

  ```
  MP-AID IS DISABLED CONTACT YOUR SYSTEMS ADMINISTRATOR
  ```

To enforce termination, currently logged on users are restricted by the MP-AID DISABLE command to use of the LOGOFF command. (The FILE, SFILE, QUIT, and XQUIT commands are also available to users with the Extended Interactive Facility installed.)

The effect of the MP-AID DISABLE command is cancelled by subsequent execution of the MP-AID ENABLE command. This is the normal re-enablement procedure. However, both the MP-AID RELOAD command and the MP-AID CREATE command have the same effect.

This is the syntax for the MP-AID DISABLE command:

```
>>──MP-AID DISABLE string──┬──────────┬──;──────────>>
                           └──.───────┘
```

where *string* is a delimited or undelimited character string of no more than 72 characters in length.

For details of the MP-AID RELOAD command refer to "Unloading, Loading, and Reloading the MP-AID" on page 88. For details of the MP-AID CREATE command refer to "Creating the MP-AID" on page 11.

The MP-AID ENABLE Command

The sole purpose of the MP-AID ENABLE command is to cancel the effect of a previously executed MP-AID DISABLE command. It further clears the string specified in the MP-AID DISABLE command. Subsequent to the MP-AID ENABLE command, general users can again log on.

This is the syntax:

```
>>──MP-AID ENABLE──────────────────────────┬─;─┬──────────────>
                                           └─.─┘
```

The MP-AID FLAG Command

The MP-AID FLAG command permits you to enter a *change-reference* string for a specified InfoBank panel. This is a string of up to ten characters that is displayed whenever the panel is displayed. You would typically use the display to indicate that ASG has notified users of a change to the specified panel. The string would normally reference the Release Notes and the item in which the change is detailed.

If, for example, you entered:

```
MP-AID FLAG INF12345 SN123-12;
```

then any subsequent access to the named MP-AID INFOBANK member causes this line to display:

```
INFOBANK PANEL IN ERROR - REFER TO SN123-12
```

(the panel would also display).

The effect of an MP-AID FLAG command is cancelled and the change-reference string is cleared by entering a subsequent MP-AID RESET command for the INFOBANK member. This is the syntax of the MP-AID FLAG command:

```
>>──MP-AID FLAG mpaid-panel-name string──────┬─;─┬──────────────>
                                             └─.─┘
```

where:

`mpaid-panel-name` is the name of an MP-AID INFOBANK member

`string` is a delimited or undelimited character string no more than 32 characters in length. Otherwise, it conforms to the rules appearing below the MP-AID CREATE command for identifier and password.

The MP-AID PASSWORD Command

As a security measure, you may wish to change your password from time to time. You can do this by specifying a new password in the MP-AID PASSWORD command. You are subject to the same rules in selecting the password as you were when you entered the MP-AID CREATE command. However, no matter what your current password, the password that you enter in an MP-AID RELOAD command must match the password in the input MP-AID UNLOAD dataset. The current password would then be replaced by the older one from the MP-AID UNLOAD dataset; that is, the latter would be required in subsequent logons.

Suppose, for example, you have the password FRED and enter an MP-AID UNLOAD command. The password FRED would be written to the MP-AID UNLOAD dataset. If, subsequently, you decide to change your password from FRED to JOE, you would enter the command:

```
MP-AID PASSWORD FRED JOE;
```

Your password would become JOE, which would then be required in subsequent logons. However, if at some later time, you want to reload the content of the MP-AID UNLOAD dataset containing the password FRED, you would have to enter:

```
MP-AID RELOAD PASSWORD FRED;
```

This would cause the current password JOE to be replaced by FRED (if, at this point, you still want the password JOE, you would have to re-enter the MP-AID PASSWORD FRED JOE command).

This is the syntax of the MP-AID PASSWORD command:

```
>>──MP-AID PASSWORD old-pswd new-pswd ──┬──────┬──┬─;─┬──────────────>
                                        └──────┘  └─.─┘
```

where:

old-pswd is the password that you used to log on to the current session

new-pswd is the password that you wish to use when you log on subsequently; the password may be a maximum of eight characters in length.

Note:

This command is available to all users and, as such, is documented in *ASG-ControlManager User's Guide*.

The SET DATASET-REUSE Command

The SET DATASET-REUSE command is effective in an OS environment only, and is entered with one of the keywords ON and OFF. It affects the re-creation or reload of BDAM/VSAM dictionaries/repositories and MP-AIDs. For DIV resources any setting is ignored.

The default behavior is equivalent to issuing the command:

```
SET DATASET-REUSE OFF;
```

In this case, when a dictionary/repository or an MP-AID is to be re-created or reloaded, the physical datasets must first be deleted and re-allocated, using the DASD space management facilities of the operating system.

To reuse the datasets, bypassing the deletion and re-allocation step, issue this command:

```
SET DATASET-REUSE ON;
```

For a VSAM dictionary/repository or MP-AID, the REUSE parameter must be specified when first defining a Manager Products CLUSTER, so that any subsequent deletion and redefinition of CLUSTERs via the IDCAMS service program is not needed when re-creating or reloading the dictionary/repository or MP-AID. Refer to your Manager Products installation manual for further details.

The syntax of the SET DATASET-REUSE command is:

```
>>─── SET DATASET-REUSE ──┬──ON  ──┬──┬──;──┬──────────────>>
                          └──OFF ──┘  └──.──┘
```

Note:

This command is available only to Systems Administrators, dictionary Controllers, and Master Operators.

The WAIT Command

The executive command WAIT can be used to suspend execution of a Manager Products task for a designated period of time. Principal use of this command is in conjunction with the Manager Products Subtasking facility (see Chapter 10, "Multi-tasking with Manager Products—the Subtasking Environment," on page 135); however, it can be useful in other circumstances.

The command is restricted to execution within a Manager Products procedure and is not available in a CICS environment.

This is the syntax of the WAIT command:

```
WAIT time interval;
```

where *`time interval`* is the required delay.

In MVS, the specified value represents the delay in milli-seconds and in all other environments is the value in seconds. If the time delay is not specified then a delay of one second is assumed.

Examples

In MVS, this command:

```
WAIT 5000;
```

means "wait for 5 seconds."

In VM/CMS, this command:

```
WAIT 10;
```

means "wait for 10 seconds."

9 Tailoring the Operating Environment

This chapter includes these sections:

Introduction 108

SET Commands that Affect Command Syntax and Availability 110
The SET AMBIGUITY-ASSUMPTION Command 110
The SET-LINE-COMMAND Command 111
The SET PRIMARY-COMMAND Command 112
The SET STRING-DELIMITER Command 115

SET Commands that Affect Command Timing and Command Processing 116
The SET BUFFER-LIMIT Command 116
The SET EXCP-LIMIT Command 117
The SET INTERROGATE-ENQUEUE Command 118
The SET IO-FLUSH-LIMIT Command 120
The SET OUTPUT-LINE-LIMIT Command 121
SET and QUERY FREE-POOL 121
The SET EXTENDED-LUW Command 122
The SET EXTENDED-NOPRINT Command 123

SET Commands that Affect the InfoView Software 124
The SET INFOBANK-ENTRY Command 124
The SET HELP-ENTRY Command 124
The SET INDEX-PANEL Command 125
The SET RESERVED-INFOBANK-LINE Command. 126
SET and QUERY TOP-MENU-ENTRY Command 127

SET Commands that Affect the Language and Keyboard Interpretation 127
The SET CHARACTER-TRANSLATION Command 127
The SET KANJI-MODE Command 129
The SET KANJI-STRING-DELIMITER Command 130
SET and QUERY MESSAGE-LANGUAGE Command 131

SET Commands that Affect Physical Storage Location of External Datasets . . . 132
The SET VIRTUAL INPUT/OUTPUT (SET VIO) Command 132

Introduction

There are a number of variants of the ControlManager SET command (not available to the general user) that you can enter in order to tailor the operating conditions for the session in which they are executed. They are commands you would ordinarily place in Logon Profiles, Global Profiles, or Corporate Executive Routines for execution by general users, depending on the facilities available at your installation.

A SET command is effective only for the session in which it is executed; at the end of the session, its effect is removed.

SET commands fall into these general categories:

- SET commands which determine command syntax and names; they affect how the software will interpret a command when entered. The commands include:
  - SET AMBIGUITY-ASSUMPTION
  - SET LINE-COMMAND (if User Defined Commands facility and the Extended Interactive Facility are installed)
  - SET PRIMARY-COMMAND (the User Defined Commands facility is required when this command is used to rename primary commands or to specify that an Executive Routine should be run instead of a primary command, but not when it is used to disable a primary command)
  - SET STRING-DELIMITER
  - SET DICTIONARY-UPDATES (if the Systems Administrator's Environmental Control Facility is installed)
  - SET MPAID-UPDATES (if the Systems Administrator's Environmental Control Facility is installed).
- SET commands which set limits on the operations performed by the software in processing a command. These include:
  - SET BUFFER-LIMIT (if the Extended Interactive Facility is installed)
  - SET EXCP-LIMIT (in CICS, CMS, Siemens Timesharing Interface, and TSO environments only)
  - SET INTERROGATE-ENQ
  - SET IO-FLUSH-LIMIT
  - SET OUTPUT-LINE-LIMIT (in CICS, CMS, Siemens Timesharing Interface, and TSO environments only)
  - SET USER-BLOCKS (if the Extended Interactive Facility and Systems Administrator's Environmental Control Facility are installed)
  - SET FREE-POOL (if the Extended Interactive Facility is installed)

- SET commands that affect the InfoView software. These SET commands all require the User Defined InfoSystem facility for their execution. They include:
  - SET INFOBANK-ENTRY
  - SET HELP-ENTRY
  - SET INDEX-PANEL
  - SET RESERVED-INFOBANK-LINE (in CICS, CMS, Siemens Timesharing Interface, and TSO environments only)
  - SET TOP-MENU-ENTRY
- SET commands that affect the language and keyboard interpretation. These commands require ControlManager Nucleus for their execution. They include:
  - SET CHARACTER-TRANSLATION
  - SET KANJI-MODE
  - SET KANJI-STRING-DELIMITER
  - SET MESSAGE-LANGUAGE

For each of the above SET commands, there is a corresponding QUERY command available to all users. The type of response to a QUERY command will vary depending primarily on the category of the SET command to which it corresponds. For example:

- The response to QUERY PRIMARY-COMMAND is a list of the commands which have been renamed as a result of previously executed SET PRIMARY-COMMAND commands
- The response to QUERY BUFFER-LIMIT is the maximum number of buffers available to the user in the current session
- The response to QUERY INFOBANK-ENTRY is the name of the panel displayed when the INFOBANK command is entered, that is the Top-Level InfoBank Entry Panel.

The QUERY commands are not your private commands. However, since they do correspond to SET commands which can be entered only by you, each is described in this chapter in conjunction with the SET command with which it is associated.

SET commands can be placed in both Global and Logon Profiles, depending on the facilities available at your installation. Unless you have the Systems Administrator's Environmental Control Facility installed, you will be restricted to the Global Profile GLOBAL0000 and the Global Profile GLOBALAUTO. Using the former for SET commands places installation-wide limits on user operation since GLOBAL0000 is executed every time Manager Products is run (except for Systems Administrator runs in which you log on specifying NO-PROFILE).

If the Systems Administrator's Environmental Control Facility is installed, you have a great deal more flexibility in your use of SET commands. The commands can be made applicable both to individual users and to groups of users by exercising extended options available in the Logon Profiles.

However, the SET STRING-DELIMITER command, when used, may appear only in GLOBAL0000.

It should be noted in general that a SET command takes effect as soon as it is processed and is applicable to all subsequent commands entered in the session. However, a command that has been disabled is nevertheless accepted if it appears in a Logon Profile, a Global Profile, or a Corporate Executive Routine which is being executed.

For details of the NO-PROFILE keyword refer to "Logon Profiles" on page 26.

For details of the SET commands available within the User Defined InfoSystem facility refer to the User Defined InfoSystem manuals.

For details of Logon Profiles, Global Profiles, and Corporate Executive Routines refer to *ASG-ControlManager User's Guide*.

For details of SET command variants available to all Manager Products users as well as QUERY command variants refer to *ASG-ControlManager User's Guide*.

SET Commands that Affect Command Syntax and Availability

The SET AMBIGUITY-ASSUMPTION Command

Ordinarily, when a command is entered, it will not be accepted if the command identifier is abbreviated (by truncation from the right) to a point of ambiguity. Instead, an error message is displayed indicating the ambiguous entry. As an option, you can enter the following command, which causes the software to assume that a particular command was intended when a command identifier has been truncated beyond the allowable limit:

```
SET AMBIGUITY-ASSUMPTION ON;
```

In such a situation, ControlManager selects the first of the two or more command names (from a list held internally) that begin with the abbreviation entered. The names are normally listed in order of least risk to the user if executed. For example, REPORT, which is not an updating command, would be selected rather than REPLACE or REMOVE if RE were entered as the command name. ControlManager would then validate the entry according to the REPORT command specifications. If validation is successful, the REPORT command would be executed.

The lists of command names used to resolve ambiguities can vary depending on the environment in use and the commands available to the user who is logged on. For example (to continue with the above illustration), if the REPORT command were currently disabled because of a previously entered SET PRIMARY-COMMAND REPORT OFF command, then the command REPLACE would be assumed, being now first in the curtailed list of command names beginning with RE.

The only purpose served by entering the command:

```
SET AMBIGUITY-ASSUMPTION OFF;
```

is to override a previously executed SET AMBIGUITY-ASSUMPTION ON command.

The QUERY AMBIGUITY-ASSUMPTION command can be entered by any user to determine whether or not a SET AMBIGUITY-ASSUMPTION ON command is currently in effect. This is the format of the command:

```
>>──QUERY AMBIGUITY-ASSUMPTION──┬──;──┬──>
                                └─────┘
```

The SET-LINE-COMMAND Command

If the User Defined Commands facility and the Extended Interactive facility are installed, ControlManager provides a capability for you to rename any line command.

This is the syntax of the command:

```
>>──SET-LINE-COMMAND asg-line-command TO new-line-command──┬──;──┬──>
                                                           └─────┘
```

where:

asg-line-command is an ASG-supplied line command name

new-line-command is any single printable character (except a blank space, a terminator, or a name in current use for another line command).

A single-character line command name can be changed to any other single-character name (except a blank space or a terminator) provided that it is not currently being used by another line command.

A two-character (Block) line command name cannot be changed directly. However, when a single-character line command is given a new name, the corresponding two-character name automatically changes to the two-character name which corresponds to the new single-character name. If, for example, the line command C is renamed as Q, then the block line command CC will automatically be renamed as QQ.

If a line command name is the same as the name of an MP-AID Corporate or User Executive Routine, the line command will take precedence if the name is entered in the line command Area.

No matter how many times you rename a line command, you must always enter the ASG-supplied command name in the SET command. For example, to rename the line command A as B, you would enter:

```
SET LINE-COMMAND A TO B;
```

If subsequently you rename B as Q, you must enter:

```
SET LINE-COMMAND A TO Q;
```

because A is the ASG-supplied name.

Note:

It was indicated above that you cannot rename a given line command with a name currently in use for some other line command. However, you can achieve the same effect by first renaming the other line command and then renaming the given line command as desired.

If, for example, you want to rename the line command A as C, you would first rename C, say, as D, using:

```
SET LINE-COMMAND C TO D;
```

Then you would be able to enter the command:

```
SET LINE-COMMAND A TO C;
```

The QUERY LINE-COMMAND command can be entered by any user to provide a list of all renamed ASG line commands and the names currently in use for them. This is the syntax:

```
QUERY LINE-COMMAND;
```

The SET PRIMARY-COMMAND Command

The SET PRIMARY-COMMAND command enables you to disable or rename a Primary Command, and to specify that a Procedures Language Executive Routine is to be invoked whenever a particular Primary Command is issued.

With each option, you must enter the ASG-supplied Primary Command name whether or not it has been altered by a previously entered SET PRIMARY-COMMAND renaming command. Valid truncations of the name are permitted.

Disabling Primary Commands

Every Primary Command name can be disabled except LOGOFF, QUIT, and XQUIT. This is a ControlManager Nucleus capability reserved for the Systems Administrator and provided by the command:

```
SET PRIMARY-COMMAND asg-command-name OFF;
```

When you disable a command, whether the disabling SET command appears within or outside an MP-AID PROFILE or EXECUTIVE member, the disabled command nevertheless is executed if encountered by the sofiware (in the session in which it was disabled) in the same or a subsequently invoked PROFILE or EXECUTIVE member.

To re-enable a Primary Command, you would enter the above command with the keyword OFF replaced by ON.

Renaming Primary Commands

If the User Defined Commands facility is installed, every Primary Command can be renamed. To rename a Primary Command, enter:

```
SET PRIMARY-COMMAND asg-command-name TO new-command-name;
```

where *new-command-name* must not be a name currently in use for another primary command (whether or not that command has been disabled). If it is, SET PRIMARY-COMMAND will be rejected.

For example, if you enter the following set of commands, the first and last commands will be rejected.

```
SET PRIMARY-COMMAND PRINT TO LIST;
SET PRIMARY-COMMAND LIST TO ITEMIZE;
SET PRIMARY-COMMAND LIST OFF;
SET PRIMARY-COMMAND PRINT TO ITEMIZE;
```

If you disable a renamed command and re-enable it in the same run, the name change will remain in effect after re-enablement. For example, the following set of commands, executed in the same run, would cause the PRINT command to be renamed as DISPLAY, and finally renamed again as PRINT:

```
SET PRIMARY-COMMAND PRINT TO DISPLAY;
SET PRIMARY-COMMAND PRINT OFF;
SET PRIMARY-COMMAND PRINT ON;
SET PRIMARY-COMMAND PRINT TO PRINT;
```

It should be noted that, if a Primary Command name is the same as that of an MP-AID Corporate or User Executive Routine, the command will take precedence when you enter the name. In these circumstances, in order to execute, for example, the Corporate Executive Routine of the same name, you would enter the name prefixed with the keyword EXECUTE or CORPORATE-EXECUTIVE.

Using Primary Commands to Invoke Procedures Language Executives

If the User Defined Commands facility is installed, every Primary Command can be specified to invoke a Procedures Language Executive Routine. To do so, enter:

```
SET PRIMARY-COMMAND asg-command-name AS executive-name;
```

For example:

```
SET PRIMARY-COMMAND REMOVE AS VREMOVE;
```

specifies that, if the user issues the command REMOVE, the Executive Routine named VREMOVE will be executed instead. VREMOVE could, for example, carry out further user validation before the remove is permitted.

The current user MP-AID search sequence applies when locating the Executive Routine to be run.

Once invoked as a replacement for a Primary Command, any subsequent execution of the Primary Command within the Executive Routine, or in a lower level called Executive Routine, will result in execution of the Primary Command and not the replacement Executive Routine. To run the Executive Routine, its name must be specified.

If Primary Commands that read dictionary member source definitions (such as REPLACE) are reconfigured, the Executive Command SREAD will probably need to be used. Refer to *ASG-Manager Products Procedures Language* for details.

SET PRIMARY-COMMAND Syntax

```
>>--- SET PRIMARY-COMMAND asg-command-name ----------------------------->
>--+--ON ------------------------------------------------------+--;--+-->
   |--OFF -----------------------------------------------------|  |--.--|
   |--TO new-command-name -------------------------------------|
   |--AS executive-name ---------------------------------------|
```

where:

asg-command-name is the name of an ASG-supplied command

new-command-name is an undelimited string of no more than 20 characters. The first character must be alphabetic; any remaining characters must be letters of the alphabet, numerals from 0 to 9, and/or hyphens.

executive-name is the name of an Executive Routine to be run instead of the primary command.

The QUERY PRIMARY-COMMAND command can be entered by any user. It causes a list to be displayed of all available ASG Primary Commands, all renamed Primary Commands, and all reconfigured Primary Commands. This is the syntax:

```
>>──QUERY PRIMARY-COMMAND──────────────┬─ ; ─┬──────────────>
                                       └─ : ─┘
```

The SET STRING-DELIMITER Command

ASG supplies the capability of using either of two characters as a string delimiter, the single quote ('), and the double quote ("). Rules for their use appear in *ASG-ControlManager User's Guide*.

Your private command, SET STRING-DELIMITER, provides you with the ControlManager Nucleus capability of making available one or more additional single-character delimiters which, with the single and double quote, comply with the same rules of use. Any character *except* one of these may be selected for use as a delimiter:

- letters of the alphabet
- numerals (0 to 9)
- . (full stop or period)
- ; (semicolon)
- , (comma)
- ((left parenthesis)
-) (right parenthesis)
- ! (exclamation point)
- / (slash)
- * (asterisk)
- % (percent)
- & (ampersand)
- + (plus)
- - (minus or hyphen)
- ¬ (not)
- = (equals)
- > (greater than)
- < (less than)
- space (hexadecimal 40)
- non-printing hexadecimal characters

Each new delimiter added requires a separate SET command. It can be entered as either a delimited (with a currently available delimiter) or an undelimited single-character string. You could, for example, add the three characters @, #, and ? as delimiters by entering these three commands in the order given:

```
SET STRING-DELIMITER '@';
SET STRING-DELIMITER #;
SET STRING-DELIMITER #?#;
```

This command must be used in the Universal Global Profile GLOBAL0000.

This is important in order to ensure that the same set of delimiters is available to all users in every run. Otherwise, ROLL-FORWARD recovery will not be possible (see *ASG-Manager Products Controller's Manual*). It should be kept in mind that, when a delimiter is made available, it cannot be disabled in the same run.

This is the syntax of the command:

```
>>--- SET STRING-DELIMITER character ----------+---;---+---------->
                                                |   :   |
```

where `character` is a delimited or undelimited one-character string, as described above.

The QUERY STRING-DELIMITER command can be entered by any user and causes a list of all the available delimiters to be displayed. This is the syntax:

```
>>--- QUERY STRING-DELIMITER ------------------+---;---+---------->
                                                |   :   |
```

SET Commands that Affect Command Timing and Command Processing

The SET BUFFER-LIMIT Command

This command is available only in TSO, CMS, CICS, and Siemens Timesharing Interface environments and has utility only if the Extended Interactive Facility is installed. The Extended Interactive Facility makes available to the user several operational modes for entering commands (in addition to the basic Command Mode), namely:

- Edit Mode
- Update Mode
- Lookaside Mode.

Any of these modes can be entered directly from Command Mode or from each other. All three can be nested separately and together.

For each command that adds a new or nested mode, an additional buffer is required to process the command or display its output. Normally, the number of such buffers available to a user at any one time is five (plus a restricted sixth buffer). The SET BUFFER-LIMIT command makes available a specified number *n* of buffers, where *n* is any positive integer. Again, one additional buffer is available with restricted functionality. In buffer *n+1*, the user can enter only Editor Primary Commands, Output Browsing Commands, or one of the commands: QUIT, XQUIT, FILE, and HOLD.

Although the SET BUFFER-LIMIT command can be entered and used in the Global Profile GLOBAL0000, it would be used most commonly in Profiles to set limits for individual users or for groups of users. Thus, the command has its greatest utility if the Systems Administrator's Environmental Control Facility is installed.

This is the syntax of the command:

```
>>──── SET BUFFER-LIMIT n ──────────────────────┬─;─┬──────────────>
                                                └─.─┘
```

where *n* is a positive integer less than or equal to 9999999.

The QUERY BUFFER-LIMIT command can be entered by any user to determine the current value of *n*. This is the syntax:

```
>>──── QUERY BUFFER-LIMIT ──────────────────────┬─;─┬──────────────>
                                                └─.─┘
```

The QUERY ACTIVE-BUFFERS command can be entered by any user at any time during a run to obtain a list of the buffers he or she is currently using. If the number is *n+1*, the output indicates that the maximum number of buffers has been exceeded. This is the syntax of the command:

```
>>──── QUERY ACTIVE-BUFFERS ──────────────────┬─;─┬──────────────>
                                               └─.─┘
```

The SET EXCP-LIMIT Command

The SET EXCP-LIMIT command is available only in TSO, CMS, and CICS environments. As with the other SET commands it can be entered and used in GLOBAL0000 but has greatest utility when entered for individual users or groups of users in Profiles available only if the Systems Administrator's Environmental Control Facility is installed.

The action of the SET EXCP-LIMIT command, when entered with a positive integer *n* specified, is to set an upper limit for the number of disk I/O operations permitted in processing any command other than UNLOAD, RELOAD, STATUS, CREATE, RESTORE, and SAVE. Thus it ensures that the system will not be held up by any user while executing a command requiring a large number of I/O operations. The minimum value you can enter for *n* is 50.

The effect of SET EXCP-LIMIT is to terminate processing of a subsequent command when the number of disk I/O operations exceeds *n*. An appropriate error message is issued, any generated output is made available, and processing continues with the next command entered.

The action of SET EXCP-LIMIT when the keyword OFF is specified (instead of a number *n*) is to remove the current limit, if any, on the number of allowable disk I/O operations in processing a command. Since there is no limit imposed at the beginning of any run, the only purpose served by entering the command with the keyword OFF is to override a previously executed SET EXCP-LIMIT *n* command.

When executing Manager Products under MPSF with DIV repositories and MPAIDs, no physical I/O operations are performed by users accessing DIV resources. In this situation an EXCP is considered to be an access to the shared buffer containing the resource. When setting an EXCP-LIMIT you will need to use a value which is significantly larger than the value used for non-DIV access. If, for example, a non-DIV limit of 1000 is used, then a reasonable value for a DIV limit is likely to be around 50,000.

This is the syntax of the command:

```
>>--- SET EXCP-LIMIT ------------------------- n   ---- ; ----------->>
                                              OFF
```

where *n* is a positive integer.

The QUERY EXCP-LIMIT command can be entered by any user to determine the current upper limit (or the absence of such a limit) on the number of I/O operations permitted in processing a command. This is the syntax of the command:

```
>>--- QUERY EXCP-LIMIT ----------------------------- ; ----------->>
```

The SET INTERROGATE-ENQUEUE Command

The standard enqueuing capability implemented by ControlManager in OS and DOS environments to provide concurrent usage protection for the MP-AID when users compete for access (from a single central processor) is described in the relevant Manager Products installation manual job control requirements are given in the same section). The same procedure is utilized to provide concurrent access protection for Manager Products dictionaries.

This is the syntax of the command:

```
>>--- SET INTERROGATE-ENQUEUE ---------------- OFF   ---- ; ----------->>
                                              ON
```

and enables you as the Systems Administrator to alter this capability in a run during the processing of any subsequent dictionary interrogation command.

As indicated under the heading *Alternative Usage* in the relevant installation manual, the alternative procedure permits concurrent access, during processing of such an interrogation command, not only to other interrogation commands (as in the Standard Procedure), but also to one dictionary update command (at a time). This can result in much improved response time for all users. (As soon as any update command gains access to the dictionary, no subsequent command can gain access until the update has ended.)

When an interrogation command is being processed concurrently with an update command, it is possible that the response to the interrogation command could be affected by dictionary changes occurring as a result of the update. These changes can be tracked by use of the SET IO-FLUSH-LIMIT command.

The action of SET INTERROGATE-ENQUEUE when the keyword ON is specified is to restore the currency of the Standard Usage enqueuing capability.

SET INTERROGATE-ENQUEUE OFF can be particularly helpful in large installations when many users may be competing for dictionary access. It can have its greatest utility when place in GLOBAL0000. However, when the Systems Administrator's Environmental Control Facility is installed, it can also be useful in profiles defined either for individual users or for groups of users.

SET INTERROGATE-ENQUEUE ON, on the other hand, is probably more helpful when utilized in a Corporate Executive Routine for execution by (qualified) users to override previously executed SET INTERROGATE-ENQUEUE OFF commands when the added protection is required, for example, while generating source language with a PRODUCE command (refer to *ASG-Manager Products Source Language Generation*). For this reason, the OFF variant of the command may also be required in a Corporate Executive Routine to restore Alternative Usage enqueuing following temporary requirement of the Standard Usage capability.

The QUERY INTERROGATE-ENQUEUE command, available to any user, is:

```
>>--- QUERY INTERROGATE-ENQUEUE ----------------------- ; ---------------->
```

For details of Corporate Executive Routines refer to *ASG-Manager Products User Defined Syntax*.

The SET IO-FLUSH-LIMIT Command

This command is available generally in OS and DOS environments. However, it is not available under CMS.

ControlManager's Alternative Usage enqueuing procedure (refer to the relevant Manager Products installation manual) may be in effect during the processing of a dictionary interrogation command. If so, this is the consequence of a SET INTERROGATION-ENQ OFF command executed previously in the same run.

For detailsof the SET INTERROGATE-ENQUEUE command refer to "The SET INTERROGATE-ENQUEUE Command" on page 118.

As indicated in your installation manual, if an update command gains access to the dictionary while the interrogation is in progress, it is possible for the interrogation command subsequently to access an area of the dictionary that was altered by the update command. Thus, information would be read that was not current when the interrogation command was started. In these circumstances, processing of the interrogation command is interrupted, the command is put into a wait state until the update is completed, and it is requeued for subsequent restart from the point of interruption. This procedure is called an I/O flush. When the command is completed, an informatory message is output indicating the total number of I/O flushes that occurred, if any.

Ordinarily there is no limit on the number of I/O flushes that can be performed during the processing of an interrogation command. However, you can set such a limit by specifying it as a positive integer in a SET IO-FLUSH-LIMIT command. Subsequently, when the number of I/O flushes performed for an interrogation command reaches the specified limit, a diagnostic message is output and the command is terminated instead of being requeued. For the command then to be processed, it would have to be reentered. Thus, by setting the limit to one, you can ensure that subsequent interrogation commands never access information that was not current when the command first started.

The SET IO-FLUSH-LIMIT-OFF command removes any limit on the number of I/O flushes permissible for a subsequent dictionary interrogation command processed with the Alternative Usage enqueuing procedure in effect.

This is the syntax of the command:

```
>>--- SET IO-FLUSH-LIMIT ------------------- n   ---- ; ----------->
                                          |- OFF -|   |_ : _|
```

where *n* is a positive integer.

The QUERY IO-FLUSH-LIMIT command can be entered by any user to determine whether a limit has been set on the number of permissible I/O flushes and, if so, what the limiting value is. This is the syntax of the command:

```
>>--- QUERY IO-FLUSH-LIMIT ------------------------- ; ---------->
                                                     |_ : _|
```

The SET OUTPUT-LINE-LIMIT Command

In TSO, CMS, CICS, and Siemens Timesharing Interface environments, ControlManager ordinarily places a limit of 1000 on the number of lines of output generated in the current output buffer when commands are executed (other than UNLOAD, RELOAD, STATUS, CREATE, RESTORE, or SAVE). You can use the SET OUTPUT-LINE-LIMIT command to specify an alternative limit for the current run. When the limit is exceeded for a subsequent command (other than one of those listed above), a message to that effect is output and processing continues with the next command.

You would place this command in GLOBAL0000 if you want to set an installation-wide limit applicable to all users for all runs. If Systems Administrator's Environmental Control Facility is used, you can use the command in Profiles to set limits for individual users or for groups of users.

This is the syntax of the command:

```
>>──SET OUTPUT-LINE-LIMIT n ──────────┬─;─┬──────────>
                                      └───┘
```

The maximum size of the output buffer is 65000 lines.

The QUERY OUTPUT-LINE-LIMIT command can be entered by any user to determine the limit on the number of lines of output which can be generated in the current run for a dictionary command other than one of those listed above. This is the syntax:

```
>>──QUERY OUTPUT-LINE-LIMIT ──────────┬─;─┬──────────>
                                      └───┘
```

SET and QUERY FREE-POOL

By default, ControlManager accumulates, up to a maximum of 128K bytes, all the virtual storage it obtains (in order to process your Manager Product commands) from the operating system. This storage is held in a *freepool* reserved for use by Manager Products.

To increase or reduce the maximum amount of virtual storage to be reserved in the freepool, enter:

```
SET FREE-POOL n;
```

where *n* is the maximum number of K (1024) bytes to be reserved. Virtual storage is accumulated in the freepool up to the specified maximum.

The amount of processing time taken up by commands is reduced as a result of ControlManager not having to request virtual storage from the operating system; the required storage may be obtained from the current freepool.

When the amount of storage required is greater than that reserved in the freepool, the additional amount is taken from the operating system and is added to the freepool, up to the specified maximum, when processing is complete.

To reset the amount of free storage to be reserved, back to the (ASG-supplied) default value, enter:

```
SET FREE-POOL;
```

To remove the current freepool and to set the feature off altogether, enter:

```
SET FREE-POOL OFF;
```

All requests for storage are then serviced directly by the operating system and, after use, returned to the operating system.

To find out the maximum amount of virtual storage that can be reserved, and the amount currently reserved, enter:

```
QUERY FREE-POOL;
```

Note that logging on to Manager Products requires the use of core storage. So, unless FREEPOOL is set OFF, core storage will be accumulated in the freepool, as a result of logging on.

All of the above commands will accept the keyword FREEPOOL instead of FREE-POOL.

The SET FREE-POOL command is not available in CICS environments.

The SET EXTENDED-LUW Command

This command modifies the execution and rules governing the definition/termination of a standard read-only dictionary/repository Logical Unit of Work (LUW) when defined using the RESERVE command. By default, EXTENDED-LUW is set off.

When EXTENDED-LUW is set on, these modifications apply:

- An extended LUW is created which can be defined or terminated from both inside and outside a Manager Products procedure. The termination environment must match that at the time of the definition (e.g., an extended LUW defined outside a procedure can only be terminated outside a procedure). As with a standard LUW, nested LUWs are not permitted. If found they are ignored, a message is output, and processing continues.
- An extended LUW defined inside a procedure is automatically terminated at the end of the highest level procedure.

- Regardless of the setting of INTERROGATE-ENQUEUE (see "The SET INTERROGATE-ENQUEUE Command" on page 118), shared control of the dictionary/repository is released after successful creation of an extended LUW. Thereafter, until the extended LUW is automatically or explicitly terminated using a RELINQUISH command, all read-only commands execute immediately without obtaining shared control of the dictionary/repository. IO-flushes (see "The SET IO-FLUSH-LIMIT Command" on page 120) are only monitored and reported when INTERROGATE-ENQUEUE is set off explicitly.
- These general user commands (used read-only) are not permitted within an extended LUW:
  - DICTIONARY
  - AUTHORITY
  - STATUS

  Controller only commands, such as SAVE and UNLOAD, are also not permitted within an extended LUW.

The extended LUW facility provides a mechanism for the fast throughput of high volumes of read-only Manager Products commands, by eliminating the overhead which can be associated with repeated ENQUEUE/DEQUEUE activity in environments such as OS/390 with Parallel Sysplex.

The syntax of the command is:

```
>>──SET EXTENDED-LUW ──┬─ ON ─┬──── ; ──────────────────────────────><
                       └─ OFF ─┘
```

Issuing the QUERY EXTENDED-LUW command determines the current setting.

In addition, output from the QUERY LUW command can be used to determine if an extended LUW is active.

The SET EXTENDED-NOPRINT Command

This command extends the effect of the NOPRINT command to a Manager Products executive procedure. In standard usage, the scope of the NOPRINT command is limited to Manager Products primary commands such as LIST and REPORT. When EXTENDED-NOPRINT is set on, the scope is extended to procedures and includes all lower level procedures called by them. By default, EXTENDED-NOPRINT is set off.

The syntax of the command is:

```
>>──SET EXTENDED-NOPRINT ──┬─ ON ─┬──── ; ──────────────────────────────><
                           └─ OFF ─┘
```

Issuing the QUERY EXTENDED-NOPRINT command determines the current setting.

SET Commands that Affect the InfoView Software

The SET INFOBANK-ENTRY Command

The ASG-supplied Top Level InfoBank Panel INFO000000 is normally displayed in response to the INFOBANK command.

This is known as the InfoBank Entry Panel. If the User Defined InfoSystem facility is installed, you can enter SET INFOBANK-ENTRY to provide an alternative Entry Panel in response to a subsequent INFOBANK command in the current Manager Products session.

This is the syntax of the command:

```
>>──SET INFOBANK-ENTRY panel-name ──┬──────┬──────────────────>
                                    └─ ; ─┘
```

where *panel-name* is the name of the InfoBank Panel to be used in the current run as the InfoBank Entry Panel.

The QUERY INFOBANK-ENTRY command, available to the general user, causes the name to be displayed of the InfoBank Panel used in the current run as the InfoBank Entry Panel. This is the syntax:

```
>>──QUERY INFOBANK-ENTRY ──┬──────┬──────────────────>
                           └─ ; ─┘
```

For more details of the INFOBANK command refer to the *ASG-ControlManager User's Guide*. For details of the GLOBALAUTO Profile refer to "Logon and Global Profiles" on page 25.

The SET HELP-ENTRY Command

Ordinarily the InfoBank panel HELP000000 is displayed in response to the HELP command entered with no operand specified.

If the User Defined InfoSystem facility is installed, you can use your private command SET HELP-ENTRY to specify an InfoBank Panel to be displayed in the current run as an alternative Help Entry Panel in response to the HELP command.

You are most likely to make use of this command to cater for differing levels of expertise (or need) among other users. You would probably enter it for individual users or groups of users in Profiles (available only if Systems Administrator's Environmental Control facility is installed).

This is the command syntax:

```
>>──SET HELP-ENTRY panel-name ──────────┬─;─┬──────────>
```

where *panel-name* is the name of the InfoBank panel to be used as the Help Entry Panel in the current run.

The QUERY HELP-ENTRY command, available to the general user, displays the name of the InfoBank Panel currently used (that is, at this point in the current run) as the Help Entry Panel.

This is the command syntax:

```
>>──QUERY HELP-ENTRY ──────────────────┬─;─┬──────────>
```

For details of the HELP command refer to the *ASG-ControlManager User's Guide*.

The SET INDEX-PANEL Command

When a HELP command is entered with an operand specified, such as a member type or a command name, the InfoView software ordinarily responds by using the ASG-supplied InfoBank Panel HELP-INDEX as a directory to determine which panel should be displayed. Such a directory is called an Index Panel. InfoView searches the Index Panel for a SELECT clause containing the operand specified in the HELP command and displays the panel named in the SELECT clause.

If the User Defined InfoSystem facility is installed, you have the option of entering a SET INDEX-PANEL command naming an alternative InfoBank panel as the Index Panel for the current run. In this manner, you can exercise control over the information supplied to InfoSystem users.

If the Systems Administrator's Environmental Control Facility is installed, this capability is greatly enhanced since control can be extended through Profiles on an individual user or group user basis.

This is the command syntax:

```
>>──SET INDEX-PANEL panel-name ──────────┬─;─┬──────────>
```

where *panel-name* is the name of the InfoBank panel to be used as the Index Panel in the current run.

The QUERY INDEX-PANEL command, available to the general user, displays the name of the InfoBank Panel presently assigned (for the current run) as the InfoBank Index Panel.

This is the command syntax:

```
>>──── QUERY INDEX-PANEL ──────────────────────┬─ ; ─┬──────────────>
                                               └─ . ─┘
```

Refer to the *ASG-ControlManager User's Guide* for details of the HELP command.

The SET RESERVED-INFOBANK-LINE Command

In TSO, CMS, Siemens Timesharing Interface, and CICS environments only, whenever an InfoBank Panel is displayed, the line immediately above the Command Area is reserved for display of a string of up to 132 characters. This line, referred to as the Reserved InfoBank Line, normally contains this string:

```
IF YOU NEED HELP, KEY IN HELP AND PRESS ENTER
```

If the User Defined InfoSystem facility is installed, you can use your private command SET RESERVED-INFOBANK-LINE to specify an alternative string for subsequent display in the Reserved InfoBank Line whenever a panel is displayed during the current run.

As with the other commands described in this branch, the SET RESERVED-INFOBANK-LINE command can be placed in the Global Profile GLOBAL0000 or, if the Systems Administrator's Environmental Control Facility is installed, it can be placed in profiles defined for individual users or groups of users.

This is the syntax of the command:

```
>>──── SET ──┬──RESERVED-INFOBANK-LINE string ──┬──────────────>
            └──RESERVED-INFOBANK-LINE──┬─ ; ─┬─┘
                                       └─ . ─┘
```

where *`string`* is an undelimited string of up to 132 printable characters, including spaces. Characters normally recognized as delimiters or terminators are interpreted literally as part of the string. Only when a terminator is entered immediately after the keyword RESERVED-INFOBANK-LINE, *with no intervening spaces*, is it recognized as such. In this event, nothing is displayed in the Reserved InfoBank Line subsequently when a panel is displayed. Otherwise, the software automatically terminates the command at the end of the line.

The QUERY RESERVED-INFOBANK-LINE command can be entered by any user to determine the string that will be displayed in the Reserved InfoBank Line subsequently, during the current run, when an InfoBank Panel is displayed. This is the command syntax:

```
>>──── QUERY RESERVED-INFOBANK-LINE ──────────┬─ ; ─┬──────────────>
                                               └─ . ─┘
```

SET and QUERY TOP-MENU-ENTRY Command

Use the SET TOP-MENU-ENTRY command to specify the panel which is displayed when users enter the command SELECT TOP-MENU. These are the valid forms of the command:

```
SET TOP-MENU-ENTRY panel-name;
```

where *panel-name* is the name of an InfoBank Panel.

To find out the current setting, enter:

```
QUERY TOP-MENU-ENTRY;
```

The ASG-supplied default is INFO00000. However, you may change this for individual and/or groups of users, or for all users, by putting the appropriate SET TOP-MENU-ENTRY command into Logon Profiles or a Global Profile, respectively.

SET Commands that Affect the Language and Keyboard Interpretation

The SET CHARACTER-TRANSLATION Command

This command has two variants that enable you to modify Manager Products Input and Output Translation Tables, in order that:

- Specified keyboard characters are translated on input to another character
- Output is translated as required in order that your terminals and/or printers display/print the required character
- Standard case translation is modified for specified characters

Use the following form of the command to modify the Input Translation Tables so that they translate the input made by your keyboard:

```
SET CHARACTER-TRANSLATION INPUT c1 c2 c3;
```

where *c1*, *c2*, and *c3* are hexadecimal codes (EBCDIC) for the following:

— *c1* is the input character you wish Manager Products to translate to:

— *c2* when upperc ase translation is not applied

— *c3* when uppercase translation is applied

(Uppercase translation is applied to all input via the Command Area and the Line Command Area. Uppercase translation is not applied to all other input areas unless UPPER-CASE has been set ON.)

Refer to the *ASG-ControlManager User's Guide* for details of setting and querying UPPER-CASE.

If the hex codes specified as c2 and c3 are not supported by the Output Translation Tables [in which case they will be translated to a space (X'40') on output] or they are, but your terminals and/or printers are configured in such a way that the required character is not printed/displayed correctly, you must also modify the Output Translation Tables as described below.

Use the following form of the command to modify the Output Translation Tables so that a hex code, representing a character input to Manager Products (and passed unaltered or translated by the Input Translation Tables) is translated when output, to the hex code required in order that your terminals and/or printer/s, display/print the character you want:

```
SET CHARACTER-TRANSLATION OUTPUT c1 c2 c3;
```

where *c1*, *c2*, and *c3* are hexadecimal codes (EBCDIC) for these:

- *c1* is the input character you wish Manager Products to translate to:
- *c2* when it is output to your terminals
- *c3* when it is output to your printers

The INPUT variant is available in Full Screen Interactive environments; that is, when Manager Products are running under CICS, TSO, CMS, or Siemens Timesharing Interface.

The OUTPUT variant is available in all environments. In Full Screen Interactive environments a separate and different output translation may be specified for your terminals and your printers. In all other environments the translation specified for output to the printer will also be applied to output to a terminal; separate translation of output to terminals cannot be accomplished.

For examples of use of the above commands, a description of the Character Translation facility, and for details of the QUERY CHARACTER-TRANSLATION command, refer *ASG-ControlManager User's Guide*.

The SET KANJI-MODE Command

Use this command to define the Kanji Mode during the current session or (when it is placed in Executive Routines or in Logon, Global or User Defined Profiles) as a default.

This is the syntax of the command:

```
>>--- SET KANJI-MODE ---+-- IBM --------------------+--- ; ---+-------->><
                         |-- HITACHI ---+-----------|   : ---|
                         |-- FUJITSU ---|           |
                         |-- OFF -------|           |
```

Once the command has been successfully executed, Kanji character strings, enclosed within Shift-Out and Shift-In characters, may be entered within delimited character strings.

The Shift-Out and Shift-In characters used must specify the hexadecimal codes recognized in your hardware/software configuration, as indicating a shift-out to Kanji Mode and a shift-in to EBCDIC Mode. The codes required differ according to the Kanji Mode you are using. These are the codes required for each Kanji Mode:

Kanji Mode	Shift-Out to Kanji	Shift-In to EBCDIC
IBM	X'OE'	X'0F'
HITACHI	X'0A42'	X'0A41'
FUJITSU	X'28' or X'38'	X'29'

The ASG-supplied default is OFF. This means that shift-out and shift-in codes are not recognized by Manager Products and are translated to spaces (X'40') on output; Kanji characters are not recognized as such by Manager Products.

To find out the current Kanji Mode, enter:

```
QUERY KANJI-MODE;
```

For details of Manager Products support for Kanji refer to *ASG-ControlManager User's Guide*. For details of interrogating Kanji strings refer to "The SET KANJI-STRING-DELIMITER Command" on page 130.

The SET KANJI-STRING-DELIMITER Command

Use this command to establish a Kanji String Delimiter for use when interrogating the dictionary for sub-strings within Kanji character strings.

This is the syntax of the command:

```
>>--- SET KANJI-STRING-DELIMITER character ----------+---;---+---------->
                                                     |       |
```

where *character* is any character acceptable as a Manager Products string delimiter, except for the characters single quote (') and quotation mark (").

When the Kanji String Delimiter is used, the Shift-out and Shift-in characters that must be included in the specified search string, in order to identify it as a Kanji string, are not included as part of the search string.

For example, a member definition includes the clause:

```
DESCRIPTION
'SO-character     kanji-string    SI-character'
```

If you want to search for the whole Kanji string you can use the standard string delimiter. For example:

```
WHICH KEPT HAVE DESCRIPTION INCLUDING
'SO-character     kanji-string    SI-character';
```

To search for a substring of kanji-string you must use a Kanji String Delimiter. For example:

```
WHICH KEPT HAVE DESCRIPTION INCLUDING
/SO-character     kanji-string    SI-character/;
```

where the slash character (/) has been defined as a Kanji String Delimiter using the SET KANJI-STRING-DELIMITER command.

To find out which character, if any, is currently defined as the Kanji String Delimiter, enter:

```
QUERY KANJI-STRING-DELIMITER;
```

The ASG-supplied default is OFF; that is, no Kanji String Delimiter is defined.

Note:

Full Screen Editor commands such as FIND and LOCATE cannot be used to search for Kanji strings.

Note:

Only one Kanji String Delimiter may be defined at any one time; each successful SET command will override the effect of a previously executed SET command. You are advised to establish an installation default by placing a SET KANJI-STRING-DELIMITER command into the Global Profile GLOBAL0000.

SET and QUERY MESSAGE-LANGUAGE Command

Use the SET MESSAGE-LANGUAGE command to specify the language in which Manager Products messages are output. These are the valid forms of the command:

```
SET MESSAGE-LANGUAGE language;
```

where *language* is ENGLISH or GERMAN.

The command causes subsequent messages to be output in the specified language.

To find out the current setting, enter:

```
QUERY MESSAGE-LANGUAGE;
```

The ASG-supplied default is ENGLISH. However, you may change this for individual/groups of users, or for all users, by putting the appropriate SET MESSAGE-LANGUAGE command into Logon Profiles or a Global Profile, respectively.

SET Commands that Affect Physical Storage Location of External Datasets

The SET VIRTUAL INPUT/OUTPUT (SET VIO) Command

External datasets created by Manager Products are normally written to disk or tape storage.

In MVS and VM environments, certain of these datasets can be created as VIO datasets (i.e., created in extended virtual storage) where they can be read subsequently. By eliminating physical I/Os and the need to allocate an external dataset, this facility provides a simplified and faster method of transferring data from dictionary to dictionary and MPAID to MPAID.

Virtual Input/output can currently be enabled for:

- The dictionary SAVE and RESTORE commands
- The MPAID UNLOAD and LOAD commands

using the SET VIO command.

No job control requirements exist for VIO datasets and any current definitions are ignored.

An extended use of VIO allows VIO datasets to be created and directed to another Manager Products task, for input to a dictionary or an MPAID by that task. Data can be sent:

- From the Manager Products maintask to a subtask
- From a subtask to the maintask
- From a subtask to another subtask.

See Chapter 10, "Multi-tasking with Manager Products—the Subtasking Environment," on page 135.

This is the syntax of the command:

`SET VIO ON;`	Enables VIO for the current task
`SET VIO OFF;`	Disables VIO for the current task

In extended use with subtasking:

`SET VIO FOR` *`nn`*`;`	Enables and directs VIO dataset for use by task *`nn`*
`SET VIO OFF;`	Disables and passes VIO dataset to task

The QUERY VIO command can be used to provide VIO status for the current task:

```
QUERY VIO;
```

General notes

1 At completion of each command (SAVE or UNLOAD) creating a VIO dataset, the dataset is *closed*. Any subsequent SAVE or UNLOAD command issued overwrites any previously existing data.

2 Use of the facility is restricted to the Systems Administrator and dictionary Controllers.

3 These are the supported environments:

- MVS Batch
  TSO
  TSO/ISPF
  ROSCOE
- VM/CMS

Specific notes on extended use of VIO with Subtasking

1 VIO is only available when a valid subtasking environment has been established previously.

2 If the target task already has ownership of a VIO dataset, then the command is rejected.

3 For a subtask, valid task numbers are in the range of 00 to *nn* (where *nn* is the maximum number of tasks defined in the subtasking environment and excludes the number of the issuing subtask). Task 00 refers to the Manager Products maintask. The target subtask must have been initialized previously.

4 For the Manager Products maintask, valid task numbers are in the range of 01 to *nn* (where *nn* is the maximum number of tasks defined in the subtasking environment). The target subtask must have been initialized previously.

5 Ownership of the VIO dataset is passed to the target task upon successful execution of a SET VIO OFF command issued by the task creating the VIO dataset.

6 When a VIO dataset is created successfully and passed to the target task, subsequent execution of an MPAID LOAD or dictionary RESTORE command, by the target task, automatically accesses the VIO dataset, which remains available until successful execution of a SET VIO OFF command.

7 The facility is restricted to use in MVS environments as subtasking is only available for MVS Batch and TSO.

10 Multi-tasking with Manager Products— the Subtasking Environment

This chapter includes these sections:

Introduction and Overview **136**

Establishing a Subtasking Environment **137**

Sending Commands to a Subtask **137**

Manipulating Output Generated by a Subtask **139**

Terminating a Subtask **140**

Monitoring Subtask Activity **140**

Naming a Subtask **142**

Direct Communication with a Subtask **142**

Automatic Execution of a Subtask. **144**

Subtask Synchronization **145**
SUBTASK WAIT Command 145
WAIT Command. 145
SUBTASK and SUBTENV Procedures Language Functions 146

Terminating a Subtasking Environment **146**

Subtask Abnormal Termination **146**

Subtask Resource Sharing **147**

SUBTASK Syntax **148**

Points to Note **149**

Introduction and Overview

As installed, Manager Products consist of a single MVS task (the maintask) that processes all user requests in a sequential manner (in the order that they are entered). A new command can only be started on completion of the currently-executing command.

The Manager Products Subtasking facility provides a mechanism for the parallel execution of Manager Products commands and procedures. One or more MVS subtasks can be created. These receive and execute Manager Products commands and procedures asynchronously with the Manager Products maintask (the task creating the subtasking environment) and any other active subtasks.

This mode of execution can result in significant throughput improvements.

Commands are provided to manipulate any output generated by a subtask. In addition, in interactive environments, it is possible to transfer interactive execution from the Manager Products maintask to any subtask awaiting further work (i.e., an idle subtask) and subsequently to return to the Manager Products maintask or to transfer again to another subtask.

All Manager Products tasks execute independently of each other and can use either the same or differing MP-AIDs and dictionaries. Where differing MP-AIDs and dictionaries are used, the virtual input/output (VIO) external dataset facility can be used for faster and more efficient transfer of data from one MP-AID / dictionary to another. (See "The SET VIRTUAL INPUT/OUTPUT (SET VIO) Command" on page 132.)

Up to 99 additional tasks can be created. Each additional task must be initialized before use. The initialization process is performed by Manager Products and consists of attaching the subtask via the MVS ATTACH macro and establishing the Manager Products environment, normally by running a user-provided LOGON command, passed by the Manager Products maintask to the subtask.

Once initialized, further commands or procedures can be passed from the Manager Products maintask to any initialized and waiting subtask. Output from a subtask is to a buffer that can be manipulated at any time. When complete the subtask waits for further input from the maintask.

Communication between the Manager Products maintask and its subtasks is achieved using the MVS POST and WAIT macros.

Creation and control of a subtasking environment is performed by use of the primary command SUBTASK, which is only available to the Systems Administrator.

Establishing a Subtasking Environment

A Manager Products subtasking environment is created either *implicitly* or *explicitly*.

Implicit creation occurs upon receipt of the first SUBTASK SEND or START command issued in a non-subtasking environment. By default the number of subtasks available is three. The commands are only accepted when issued from the Manager Product maintask.

Explicit creation requires use of the SUBTASK DEFINE command. The user must specify the maximum number of subtasks to be made available. This can number from 1 to 99. The command is only accepted when issued from the Manager Products maintask.

In TSO environments, when a subtasking environment has been successfully created, the Manager Products identifier `MSP`, output at the bottom right-hand corner of the screen, is replaced by the constant `Main` to signify the existence of a multi-tasking environment. Further, if interactive execution is transferred to a subtask, then the constant `Main` is replaced by `Tsk=`*nn*, where *nn* is the number of the current interactive subtask.

Example

```
SUBTASK DEFINE 6;
```

Defines a subtasking environment with 6 available subtasks.

Sending Commands to a Subtask

Commands for execution by a subtask are sent to that subtask by use of the SUBTASK START or SEND command, specifying the number or name of the target subtask. Any Manager Products command or procedure normally available to the user can be processed by the subtask, except that in TSO environments full-screen interactive commands such as EDIT and UPDATE are not available. The ISPF/ISPEXEC command is also not available. If these commands are required then refer to "Direct Communication with a Subtask" on page 142 for further details.

The commands SUBTASK START and SUBTASK SEND both operate in a similar manner to each other and differ only in the way that the command(s) to be executed by the subtask are passed.

The command to be executed is passed as a delimited string when the SUBTASK START command is used, whereas with SUBTASK SEND the command(s) to be executed are passed as the contents of a Procedures Language user-defined global variable.

Regardless of the command used, the first command passed to a specific subtask should be a LOGON command, although if it is omitted the AUTOLOG feature will be invoked. In normal circumstances it is expected that a SUBTASK START will be used, passing a LOGON command, to initialize a subtask. For example, this command:

```
SUBTASK START 1 'LOGON SYSAD PASSWORD BOSS';
```

passes the LOGON command to subtask number 1 and initializes the subtask ready to receive further commands via SUBTASK START or SEND.

Use of a Manager Products terminator with the passed command string is optional as one is added automatically if it is omitted.

When sending commands using SUBTASK SEND the user must provide all Manager Products terminators as required.

For commands that can be executed by any available subtask, the subtask number or name can be given as an asterisk (*). When specified Manager Products selects any initialized and waiting subtask, provided one is available.

The SUBTASK START or SEND commands are rejected if issued for a currently executing subtask and are not issued from the Manager Products maintask.

By default, all output generated by a subtask is prefixed by the information relating to the executing subtask environment. This information consists of:

- Subtask name
- Execution date and time
- Current dictionary name, if available
- Current dictionary status, if available
- Return code.

This output can be suppressed, if required, by use of the optional keyword `NOHEADER`.

Under TSO, completion of a subtask can be notified to the Manager Products maintask by using the optional keyword NOTIFY. When NOTIFY is used, completion of the subtask is indicated by placing a message in the message-line area of the screen. The message takes the form:

`Subtask` *`name`* `ended, return code was` *`rc`*

where:

name is the name of the completed subtask

rc is the return code from the completed subtask.

Examples

```
SUBTASK ST ADMIN 'WHICH ITEM ONLY IT-X HAVE DESC SPEC';
SUBTASK START * 'BULK ENCODE UNV;';
SUBTASK SEND IMSPROD GV-IMS1 NOTIFY;
```

Manipulating Output Generated by a Subtask

All output generated by a subtask is written to a buffer in virtual storage, where it can be viewed or retrieved by the Manager Products maintask, either when the subtask has ended or as generation proceeds. The output from successive executions of a specific subtask overwrites the output generated by the previous execution.

The SUBTASK VIEW command can be used to read the contents of a subtask output buffer into a ControlManager buffer (under TSO). In batch, the output is written to the primary output device (MPOUT). Output is prefixed with subtasking environmental information (unless suppressed by use of the NOHEADER keyword). See "Sending Commands to a Subtask" on page 137).

Alternatively, the SUBTASK RECEIVE command can be used within a Manager Products procedure to read the buffer contents into a Procedures Language user-defined global variable for subsequent processing by the procedure. The contents of the user-defined variable are not erased before writing the buffer contents. The user must ensure that this is done, if necessary, before issuing the SUBTASK RECEIVE command.

Both SUBTASK VIEW and RECEIVE are only accepted when issued from the Manager Products maintask.

Examples

- `SUBTASK VIEW ADMIN;`
-
```
MPXX LITERAL = :
GLOBAL MPTASK2
MPR : SUBTASK RECEIVE 2 MPTASK2; :
```

  etc...

Terminating a Subtask

On occasion it may be necessary to terminate an attached Manager Products subtask. If for example, a long running dictionary interrogate command were initiated by mistake, it would be necessary to cancel it, in order to avoid excessive use of resources.

This can be achieved by executing the SUBTASK CANCEL command, specifying the name or number of the subtask to be terminated. After successful execution of the command, the subtask becomes available for reuse and can be restarted by use of the SUBTASK START or SEND command, passing new LOGON details.

In order to terminate an idle subtask, the SUBTASK START command can be used passing a LOGOFF command.

The SUBTASK CANCEL command is only accepted when issued from the Manager Products maintask.

Examples

- `SUBTASK CAN 1;`

  Or

- `SUBTASK CANCEL ADMIN;`

Monitoring Subtask Activity

The execution status of all subtasks allocated in the current subtasking environment can be ascertained by use of the SUBTASK DISPLAY or LIST command. The command is also invoked if the SUBTASK command is issued with no following keyword. The command can be issued by both the Manager Products maintask and any initialized subtask. The command outputs for each allocated subtask contain a detail line, consisting of these fields:

Field	Description
TASK	Contains the subtask number and is in the range 0001 to a maximum of 0099, depending on the number of subtasks allocated when the subtasking environment was created;
STAT	Contains one of these three values: INIT Subtask is allocated but is not yet initialized EXEC Subtask currently executing WAIT Subtask complete and waiting for further work unless the subtask has abended, in which case the subtask completion code is output

Field	Description
NAME	Contains the subtask name as specified by the user or defaulted when the subtasking environment was created;
TIME	Contains the time of the latest communication from the Manager Products maintask to the subtask;
DISP	Contains the location of output generated by the subtask. As this is always directed to an output buffer at present, the contents is always shown as BUFF;
LINES	Contains the count of generated lines in the output buffer, available for viewing or retrieval;
CPU/SECS	Contains the CPU time in seconds used by the subtask since its initialization;
RC	Contains the highest return code from executive routines or commands executed by the currently executing or completed subtask;
CURRENT INPUT	The contents of which depends upon the last mode of communication with the subtask: • For SUBTASK START it contains the passed command/procedure string • For SUBTASK SEND it contains the constant `** via SEND **` • For SUBTASK AUTOSEND (see "Automatic Execution of a Subtask" on page 144) it contains the constant `** via AUTO **` • For SUBTASK SWAP (see "Direct Communication with a Subtask" on page 142) it contains the constant `** via SWAP **`.

Naming a Subtask

When the subtasking environment is established, each allocated subtask is assigned a default name of `TASK-`*`nn`*, where *nn* is 01 for subtask number one, 02 for number two, up to the defined maximum number of subtasks (99). Where a subtask ID is required as part of a specific command, then either the subtask number or name may be given.

For users wishing to allocate a more meaningful name to a subtask, the SUBTASK NAME command can be used to rename the subtask. Subtask names can be up to 8 characters in length and will need to be delimited if spaces are included.

The SUBTASK NAME command is only accepted when issued from the Manager Products maintask and is accepted whatever the status of the specified subtask.

Examples

- `SUBTASK NAME 2 ADMIN;`
- `SUBTASK NAME TASK-01 IMSPROD;`

Direct Communication with a Subtask

When the Manager Products subtasking environment is created under TSO, the full screen interactive environment interfaces by default with the Manager Products maintask.

It is possible to transfer this full screen environment to interface with a specified subtask. In this mode the Manager Products maintask is suspended until the full screen environment is returned to the maintask.

The SUBTASK SWAP command is used to effect an interactive swap to a specified, initialized and waiting subtask.

The SUBTASK RETURN command is used to return to the maintask.

Rather than returning to the maintask, the SUBTASK ROTATE command can be used to perform an interactive swap to the next initialized and waiting subtask. When no such subtask exists, the full screen environment is returned to the Manager Products maintask.

The logon and normal execution mode for a subtask is `batch`. No online global profile is therefore executed at logon time. When transferring to a given subtask for the first time any online global profile specified for the user is executed to perform tailoring of the full screen interactive environment.

Figure 1 illustrates how the full screen environment can be transferred within a subtasking environment:

Figure 1 • Transferring a full screen environment within a subtasking environment

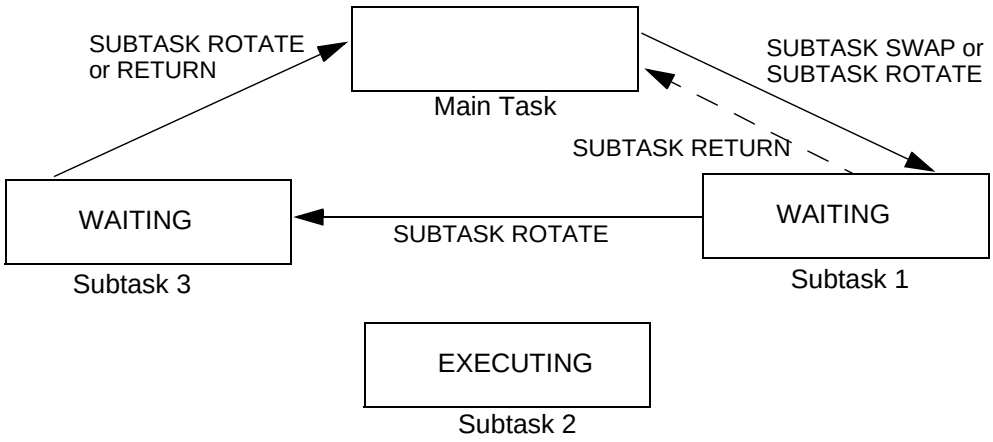

When using SUBTASK SWAP it is possible to pass a Manager Products command string to be executed by the new interactive task. Any output created by previous subtask execution and available in the subtask output buffer can be transferred to a ControlManager full-screen buffer using the SVIEW command. Any subtasking environmental information generated is not transferred to the ControlManager buffer. The SVIEW command is only available when issued from a subtask.

Note:

When returning to the Manager Products maintask, any previous subtask output buffer content is no longer available.

Examples

```
SUBTASK SWAP ADMIN SVIEW;
SUBTASK SWAP 2 'STATUS LIST';
SUBTASK ROTATE;
SUBTASK RETURN;
```

Automatic Execution of a Subtask

Execution of a Manager Products subtask is normally initiated using a variant of the SUBTASK command issued by the Manager Products maintask. However there may be situations where the execution of a subtask on a repeated basis is required.

For a TSO subtasking environment only, one method of achieving this is by defining an automatic subtask to be started at maintask transaction end[1], if and when a specified user-defined global variable has been primed with one or more Manager Products commands to be executed.

The optional keyword NODROP can be used to retain the global variable content, across multiple automatic subtask executions if required. As with explicit execution of a subtask, any generated output is written to a buffer where it may be manipulated as desired. Successive executions of an automatic subtask overwrite the contents of the output buffer.

As previously mentioned in "Manipulating Output Generated by a Subtask" on page 139, subtasking environmental information prefixing generated output can be suppressed using the optional keyword NOHEADER. An automatic subtask is defined using the SUBTASK AUTOSEND command, specifying the subtask identity of an initialized and waiting subtask and the name of a user-defined global variable. If the user-defined global variable exists when the SUBTASK AUTOSEND command is successfully executed, then the automatic subtask will be executed once at this point. The command may only be issued from the Manager Products maintask. Multiple automatic subtasks may be defined.

An automatic subtask is terminated by issuing any SUBTASK START, SEND or SWAP command to the automatic subtask. When using the subtask monitoring command SUBTASK LIST or DISPLAY, the CURRENT INPUT field for an automatic task is shown as `** via AUTO **`.

Examples

- `SUBTASK AUTOSEND ADMIN AUTOVAR1;`
- `SUBTASK AUTOSEND 2 AUTOVAR2 NODROP;`

1. Transaction end is defined as the point at which all input from the terminal has been processed and a terminal read is issued for further commands to be processed. When an automatic subtask is executed, the user-specified global variable is normally deleted and the user must again define and prime the variable for a subsequent execution to take place.

Subtask Synchronization

The Manager Products maintask and any subtasks execute independently of each other. Each task executes in a separate Manager Products environment. The work performed by a given task may have no dependence on work performed by other tasks, but in many situations this will not be the case.

Where it is necessary to synchronize the execution of subtasks, Manager Products provides three methods to achieve this:

- The SUBTASK WAIT command
- The WAIT command
- The SUBTASK and SUBTENV Procedures Language functions.

Each method is described separately below.

SUBTASK WAIT Command

This command can be issued from the Manager Products maintask only and causes the maintask to wait for the completion of a specified subtask or the completion of all executing subtasks. For a specified subtask, that task must have been previously initialized.

Examples

```
SUBTASK WAIT ADMIN;
SUBTASK WAIT 5;
SUBTASK WAIT;
```

WAIT Command

This executive command can be issued by the Manager Products maintask or a subtask and suspends execution of the issuing task for the specified time period. For details of this command please refer to "The WAIT Command" on page 106 where the command is described. It is likely that this command will be used in conjunction with the Procedures Language functions SUBTASK and SUBTENV in order to extract information relating to other Manager Products tasks.

Examples

`WAIT;`	Suspend for 1 second
`WAIT 10000;`	Suspend for 10 seconds

SUBTASK and SUBTENV Procedures Language Functions

These functions enable information to be obtained regarding the environment and execution status of the Manager Products maintask and any initialized subtasks.

Please refer to *ASG-Manager Products Procedures Language* for a full description of these functions.

Examples

```
SUBTASK(DISP,1)
SUBTASK(CCOD,3)
SUBTENV( )
```

Terminating a Subtasking Environment

The current subtasking environment can be terminated by issuing this command:

```
SUBTASK CLOSEDOWN;
```

For successful execution of this command, all currently attached subtasks must be complete (i.e., awaiting further work). The SUBTASK DISPLAY command can be used to ascertain the current status of all subtasks. Termination of the subtasking environment involves issuing the LOGOFF command to all attached subtasks, detaching all subtasks and finally releasing all virtual storage and other resources acquired by the subtasking environment.

Example

```
SUBTASK CLOSE;
```

Subtask Abnormal Termination

If for any reason an ABEND occurs in the Manager Products maintask, then the Manager Products session is terminated and control returned to the operating system component calling Manager Products.

However, when such an ABEND occurs in a Manager Products subtask, then *only the failing subtask is terminated*. The Manager Products maintask and other subtasks continue to execute. If the Manager Products formatted dump dataset (DDNAME=MPRDIAG) is correctly allocated, then a formatted dump of the failing subtask environment will be output if a program check occurs.

For other system ABENDs a dump will be output to a dataset allocated as SYSUDUMP, provided that it has been correctly allocated. Both MPRDIAG and SYSUDUMP datasets must be allocated as SYSOUT datasets, in order for multiple dumps to be produced. If allocated to disk, then only the most recent dump will be available as previous dumps will be overwritten.

The output displayed by the SUBTASK LIST or DISPLAY command shows the completion code (S*nnn* or U*nnn*) for any ABENDed subtasks in the STAT field, used to display the status of a subtask. After a subtask has ABENDed, the subtask must be re-initialized (see "Sending Commands to a Subtask" on page 137) in order to make the subtask available for further work.

Subtask Resource Sharing

All dictionary and MP-AID datasets, allocated as part of a TSO CLIST or MVS JCL stream, can be accessed by a Manager Products subtask in exactly the same manner as for the Manager Products maintask. If a requirement exists to access a different primary MPAID to that which is accessed by the Manager Products maintask, then the MPAID-DDNAME clause of the LOGON command must be used, specifying the DDNAME of the dataset to be used as the primary MPAID.

Manager Products provides concurrent update protection across subtasks using the same MVS ENQ/DEQ macros employed to serialize access across multiple TSO users or batch executions. Manager Products also provides protection against concurrent updates when output occurs to an MVS partitioned dataset. For any output to a sequential dataset, the dataset should be allocated by and reserved for the exclusive use of a specific Manager Products task.

All input datasets can be used by any number of Manager Products tasks, as required.

SUBTASK Syntax

```
>>--- SUBTASK --+-AUTOSEND subtask-id array-name --+-NODROP--+--+-NOHEADER--+--+-;-+--><
                |                                  |         |  |           |  |   |
                |                                  |         |  |           |  |   |
                |-CANCEL subtask-id ---------------------------------------------|
                |-CLOSEDOWN ------------------------------------------------------|
                |-DEFINE nn ------------------------------------------------------|
                |-DISPLAY --------------------------------------------------------|
                |-LIST -----------------------------------------------------------|
                |-NAME current-subtask-id new-subtask-id -------------------------|
                |-RETURN ---------------------------------------------------------|
                |-ROTATE ---------------------------------------------------------|
                |-SEND --+-subtask-id-+-- array-name --+-NOTIFY--+--+-NOHEADER--+-|
                |        |-*---------|                |         |  |           |
                |-START --+-subtask-id-+-- 'control-string' --+-NOTIFY--+--+-NOHEADER--+-|
                |        |-*---------|                |         |  |           |
                |-SWAP subtask-id --+-'command-string'-+-------------------------|
                |-VIEW subtask-id ------------------------------------------------|
                |-WAIT ------------+-subtask-id-+---------------------------------|
```

where:

subtask-id is a subtask number in the range 01 to 99 or a specified or defaulted subtask name of up to 8 characters

array-name is a user-defined global variable containing Manager Products commands to be executed by a subtask or to contain the output generated by the subtask

nn is a number in the range 01 to 99 representing the maximum number of subtasks to be made available in the subtasking environment being created

current-subtask-id is a subtask number in the range 01 to 99 or a specified or defaulted subtask name of up to 8 characters. It identifies a currently existing subtask.

new-subtask-id is a new subtask name of up to 8 characters and identifies the name by which the subtask can be referred to subsequently

command-string is a Manager Products command or procedure to be executed by a subtask.

Points to Note

1. The Subtasking Facility is restricted to execution in MVS batch and on-line (but excluding CICS) environments.

2. Nested subtasking environments cannot be created (i.e., a new subtasking environment cannot be established from a subtask).

3. In TSO environments, the LOGOFF command when issued from the Manager Products maintask, is only accepted if all subtasks are complete (i.e., waiting for further work). In this situation the subtasking environment will be automatically terminated as part of the LOGOFF process. In batch environments, when the LOGOFF command is encountered and one or more subtasks are still executing, then those subtasks will be cancelled and the subtasking environment terminated.

11 Manager Products Virtual Dictionary Facility

This chapter includes these sections:

Introduction and Overview 151
Virtual Dictionary Creation—Commands, Defaults, and General Information 152
Virtual Dictionary Creation—Specifying Virtual Storage Allocations 153
Virtual Dictionary Creation—Specifying the Number of Statuses 154
Virtual Dictionary Creation—Specifying a Log Dataset and What Will Be Logged 155
Virtual Dictionary Creation—Specifying Logical Blocksizes 156
VCREATE Syntax 156

Introduction and Overview

Creation of a Manager Products Virtual Dictionary is a facility available to Systems Administrators and designated dictionary Controllers, to create a single-user, high-performance virtual storage dictionary.

Population of a virtual dictionary is by the same process as is used for conventional, disk-based dictionaries (e.g., RESTORE from a SAVE dataset or member definitions INSERT/ADD/REPLACE stream). The VIO (Virtual Input/Output) external dataset facility can be used (see "SET Commands that Affect Physical Storage Location of External Datasets" on page 132 for a description of this facility), which provides a high-speed data transfer mechanism from a real to a virtual dictionary.

Most commands available with real dictionaries are equally available to a virtual dictionary.

At the end of the session, or indeed at any time, the virtual dictionary can be saved, if required, by using the SAVE ALL command and subsequently can be made available again as either a real or virtual dictionary.

Virtual Dictionary Creation—Commands, Defaults, and General Information

At the simplest level, a virtual dictionary can be created using this command, assuming that the defaults taken are acceptable:

```
VCREATE dictionary-name;
```

These additional keywords are available to control:

- Virtual Storage allocations
- Logical Blocksizes
- Master Password
- Number of Statuses allocated
- Logging Options

These defaults are used:

Keywords	Default
Index Virtual Storage allocation	64K
Source Virtual Storage allocation	256K
Data-entries Virtual Storage allocation	256K
Recovery Virtual Storage allocation	64K
Log Virtual Storage allocation	64K
Index Logical Blocksize	2047 bytes
Source Logical Blocksize	300 bytes
Data-entries Logical Blocksize	300 bytes
Recovery Blocksize	8192 bytes
Log Blocksize	8192 bytes
Number of Statuses	1
Master Password	dictionary name
Logging Options	none

A virtual dictionary is opened automatically, using the specified or defaulted Master Password, as part of the VCREATE command. No DICTIONARY command must be given, which would close the virtual dictionary, remove it from storage and attempt to open a real dictionary.

These commands cause any open virtual dictionary to be closed and removed from virtual storage:

- CLOSE
- CREATE
- DICTIONARY
- LOGOFF
- RELOAD
- ROLL-FORWARD
- VCREATE

The only limit imposed upon the size of a virtual dictionary is the amount of virtual storage available.

No job control requirements exist for virtual dictionaries and any current definitions are ignored.

Note:

A virtual dictionary exists in virtual storage only. It should be noted that, in the event of an abnormal termination of the Manager Products session, for any reason, the contents of the dictionary are lost. They can only be recovered from a user backup, created in Manager Products SAVE command format.

Virtual Dictionary Creation—Specifying Virtual Storage Allocations

To specify virtual storage allocations for one or more dictionary components, include these clauses in the VCREATE command:

- DS *sss*
- IS *sss*
- LS *sss*
- RS *sss*
- SS *sss*

where *sss* is the required virtual storage allocation in Kilobytes.

In XA or ESA environments the maximum allowed value for *sss* is 2,000,000. In all other environments the maximum value is 15,000.

All allocations given will be rounded up, if necessary, to the nearest multiple of 32K. The above clauses are expressed by the valid abbreviations for the long forms listed below:

- DS DATA-SIZE
- IS INDEX-SIZE
- LS LOG-SIZE
- RS RECOVERY-SIZE
- SS SOURCE-SIZE

Virtual Dictionary Creation—Specifying the Number of Statuses

You can specify the number of statuses that are to be available in a virtual dictionary, by including this clause in a VCREATE command:

```
WITH n STATUSES
```

where *n* is an unsigned integer in the range 1 to 255, specifying the number of statuses required in the dictionary.

The WITH clause is only accepted if the Basic Status or Advanced Status facility is installed (selectable unit CMR-DD2 or CMR-AD2). If the WITH clause is present in the command but a status facility is not installed, an error message is output and the VCREATE command is not actioned.

If the WITH clause is present in the command and a status facility is installed, the virtual dictionary is created with the specified number of unnamed statuses. These statuses can be named and manipulated subsequently by STATUS commands.

If a status facility is installed, and the WITH clause is omitted from the command, the dictionary is created with one unnamed status. This status can be named and manipulated subsequently by STATUS commands; but effectively if there is only one status in a dictionary the status facility is not used.

Virtual Dictionary Creation—Specifying a Log Dataset and What Will Be Logged

You can determine whether a log is to be included with a virtual dictionary by including this clause in a VCREATE command:

```
AND LOG
```

If LOG is present in the command, all subsequent updating commands issued on the dictionary created by this command, together with their associated member definitions or amendments, are logged.

The optional keyword AND introducing the LOG clause has no processing significance. It is available in the syntax purely for readability of the command.

The optional alternative keywords UPDATES and ALL-COMMANDS which are available with the LOG clause are accepted but ignored if the Audit and Security Facility (selectable unit CMR-DD3) is not included in your Manager Products configuration. If the Audit and Security Facility is installed, these keywords can be used to override the value of the COMTYPE parameter of the DLOG installation macro. (See the Manager Products installation manual relevant to your environment.)

If LOG is present but neither UPDATES nor ALL-COMMANDS is stated, then the value of the COMTYPE parameter of the DLOG installation macro determines whether the command operates as though LOG UPDATES were stated or as though LOG ALL-COMMANDS were stated.

If LOG UPDATES is stated, all subsequent updating commands issued on the dictionary created by this command, together with their associated member definitions or amendments, are logged.

If LOG ALL COMMANDS is stated, all subsequent commands issued on the dictionary created by this command, together with their associated member definitions or amendments, are logged.

The option to log UPDATES or ALL-COMMANDS can be changed after the dictionary has been created, if required, using a variation of the LOG command.

Virtual Dictionary Creation—Specifying Logical Blocksizes

To specify logical blocksizes for one or more virtual dictionary components you should include these clauses in a VCREATE command:

- DLB *nnn*
- ILB *nnn*
- SLB *nnn*

where *nnn* is the required logical blocksize in bytes.

The clauses above are expressed by the valid abbreviations for the long forms listed below:

- DLB DATA-LOGICAL-BLOCKSIZE
- ILB INDEX-LOGICAL-BLOCKSIZE
- SLB SOURCE-LOGICAL-BLOCKSIZE

Note:

The maximum logical blocksize is 8192 bytes, while the minimum logical blocksizes are:

- DATA 300 bytes
- INDEX 520 bytes
- SOURCE 300 bytes

VCREATE Syntax

```
>>─── VCREATE ──────dictionary-name──┬──────────────────────────┬──────────>
                                      └─ MASTER password─────────┘

>──┬─INDEX-LOGICAL-BLOCKSIZE ──────┬──nnn──┐──────────────────────────────>
   └─ILB ──────────────────────────┘       │
                                           │
>──┬─DATA-LOGICAL-BLOCKSIZE ───────┬──nnn──┐──────────────────────────────>
   └─DLB ──────────────────────────┘       │
                                           │
>──┬─SOURCE-LOGICAL-BLOCKSIZE ─────┬──nnn──┐──────────────────────────────>
   └─SLB ──────────────────────────┘       │
                                           │
>──┬─INDEX-SIZE ────────┬──sss──┐──────────────────────────────────────────>
   └─IS ────────────────┘       │
                                │
>──┬─DATA-SIZE ─────────┬──sss──┐──────────────────────────────────────────>
   └─DS ────────────────┘       │
```

```
──┬─SOURCE-SIZE ──┬──sss──┬──────────────
```

Index

A

access and security considerations 19
adding to the MP-AID 41
    all members of a type 43
    changed members of a type 44
    individual members 43
administration dictionary 19
    access and security 19
    creating 18
    introduction 17
    member types 17
all users updating the MP-AID 36
AMBIGUITY-ASSUMPTION command (SET) 110
AUTOLOG procedure 32
availability of UDS-related commands (table) 31

B

backup MP-AID 85
BUFFER-LIMIT command (SET) 116

C

change-reference string 103
CHARACTER-TRANSLATION command (SET) 127
commands for adding to the MP-AID 38
CONSTRUCT command
    overview 41
    syntax 44
CONTROL CMS command 99
CONTROL RESERVE command 101
Controllers
    availability of UDS-related commands 31
    updating the MP-AID 38
copying members from MP-AID 88
CREATE (command) 12

D

DATASET-REUSE command 105
DCUST installation macro
    specifying buffers 8
DELETE command
    overview 45
    syntax 46
DISABLE command 102
DOS environments
    installing Manager Products 7
    MP-AID backup 86

E

EDIT command 36
effect on the MP-AID date and time records 41
effects of backup and reconfiguration 98
ENABLE command 103
entering the LOGON command 22
ENVIRONMENT command 7
EXCP-LIMIT command (SET) 117
EXECUTIVE members
    adding to the MP-AID 41
    listing 72

F

FILE command 36
FLAG command 103
FORMAT members
    adding to the MP-AID 38
FREE-POOL command (SET, QUERY) 121
functions of the Systems Administrator
    Manager Products start-up procedure 4
    managing the MP-AID 5
    overview 1

G

Global Profiles
    dictionary member type 29
    in the Autolog procedure 32
    syntax 29
    tailoring operating environment 108
GLOBAL0000 29

GLOBALAUTO 32

H

HELP-ENTRY command (SET) 124
HOLD command 36

I

IDENTITY clause 27
INDEX-PANEL command (SET) 125
INFOBANK members
    adding to the MP-AID 38
    resetting 49
INFOBANK-ENTRY command (SET) 124
InfoDictionary
    and the systems administrator 1
InfoSystem commands 54
installation of Manager Products
    summary 7
INTERROGATE-ENQUEUE command
    (SET) 118
interrogating the MP-AID 53
IO-FLUSH-LIMIT command (SET) 120

J

job control
    after installation 8
    CONTROL RESERVE
        command 101
    for MP-AID 86

K

KANJI-MODE command (SET) 129
KANJI-STRING-DELIMITER command
    (SET) 130
KEPT-DATA members
    listing 72

L

LINE-COMMAND command (SET) 111
listing MP-AID members 71
logging on to Manager Products 21
    procedure 23
LOGON command 24
    and the Autolog procedure 32
    limiting attempts 33
    NO-PROFILE keyword 24
    syntax 24
    UPDATE-MPAID keyword 24
logon counter 23
logon flag 23
logon profiles 26
    example of a LOGON-PROFILE 27
    syntax 27

M

Manager Products Administration
    Dictionary 17
Manager Products installation 7
member types
    Administrative Dictionary
        GLOBAL-PROFILE 28
        GLOBAL-PROFILE syntax 29
        LOGON-PROFILE 26
        LOGON-PROFILE syntax 27
MESSAGE-LANGUAGE command (SET,
    QUERY) 131
MP-AID
    backup and reconfiguration 98
    blocksize
        changing 87
        specifying 12
    concatenation
        introduction 13
        search order 16
        using 16
    copying members 88
    creating 11
    initializing 13
    interrogation 53
    loading 88
    members
        constructing 41
        deleting 45
    reloading 88
    unloading 88
MP-AID ANALYZE command 55
    syntax 57
MP-AID BACKUP-DETAILS command 97
MP-AID BUFFERS command 58
    syntax 61
MP-AID CONCATENATION command 62
    syntax 63
MP-AID CREATE command 11
MP-AID DIAGNOSE command 64
    syntax 68
MP-AID EXEC-LIST command 68
    syntax 69
MP-AID LIST command 71
    syntax 76
MP-AID LOAD command 93
MP-AID PRINT command 78
    syntax 81
MP-AID RELOAD command 92
MP-AID STATUS command 82
    syntax 83
MP-AID UNLOAD command 89
multi-tasking 135

N

NO-PROFILE keyword 24

O

OS
- installing Manager Products 7
- MP-AID backup 86

OUTPUT-LINE-LIMIT command
- (SET) 121

P

password
- for systems administrator 12

PASSWORD command 104

passwords
- for general users 25

PRIMARY-COMMAND command
- (SET) 112

PROFILE members
- adding to the MP-AID 38
- and the RESET command 47

PURGE (command) 45

Q

QUERY commands
- ACTIVE-BUFFERS 117
- AMBIGUITY-ASSUMPTION 111
- BUFFER-LIMIT 117
- EXCP-LIMIT 118
- FREE-POOL 122
- HELP-ENTRY 125
- INDEX-PANEL 125
- INFOBANK-ENTRY 124
- INTERROGATE-ENQUEUE 119
- IO-FLUSH-LIMIT 120
- KANJI-MODE 129
- KANJI-STRING-DELIMITER 130
- LINE-COMMAND 112
- MESSAGE-LANGUAGE 131
- OUTPUT-LINE-LIMIT 121
- overview 109
- PRIMARY-COMMAND 115
- RESERVED-INFOBANK-LINE 126
- STRING-DELIMITER 116
- TOP-MENU-ENTRY 127
- VIRTUAL INPUT/OUTPUT
  - (VIO) 133

R

reconfiguring MP-AID 87

RECONNECT 25

REMOVE (command) 45

replacing MP-AID members 42
- all of a type 43
- changed of a type 44
- individual 43
- syntax 44

RESERVED-INFOBANK-LINE command
- (SET) 126

RESET (command)
- syntax 52

resetting MP-AID members
- INFOBANK 49
- overview 47
- PROFILE 48
- RESET command 47
- UDS-TABLE 50
  - duplicate 51
  - secondary 51
- USER-MEMBER 49

RETRACE InfoSystem command 54

S

secondary UDS-TABLE members
- resetting 51
- resetting duplicates 51

security considerations 19

SELECT InfoSystem command 54

SET commands
- AMBIGUITY-ASSUMPTION 110
- BUFFER-LIMIT 116
- CHARACTER-TRANSLATION 127
- EXCP-LIMIT 117
- FREE-POOL 121
- HELP-ENTRY 124
- INDEX-PANEL 125
- INFOBANK-ENTRY 124
- INTERROGATE-ENQUEUE 118
- IO-FLUSH-LIMIT 120
- KANJI-MODE 129
- KANJI-STRING-DELIMITER 130
- LINE-COMMAND 111
- MESSAGE-LANGUAGE 131
- OUTPUT-LINE-LIMIT 121
- overview 108
- PRIMARY-COMMAND 112
- RESERVED-INFOBANK-LINE 126
- STRING-DELIMITER 115
- TOP-MENU-ENTRY 127
- VIRTUAL INPUT/OUTPUT
  - (VIO) 132

SHOW UDS command availability
- (table) 31

standard enqueuing ability 119

start-up procedure 4

STRING-DELIMITER command
- (SET) 115

SUBTASK command
syntax 148
SUBTASK function 146
SUBTASK WAIT command 145
subtasking
automatic execution 144
direct communication with 142
establishing an environment 137
manipulating output 139
monitoring activity 140
naming 142
notes 149
resource sharing 147
sending commands 137
synchronization 145
terminating 140
terminating an environment 146
termination, abnormal 146
SUBTENV function 146
Systems Administrator
availability of UDS commands (table) 31
functions of
Manager Products start-up procedure 4
managing the MP-AID 5
options in a logon profile 26
systems administrator
functions of
overview 1

T

tailoring Manager Products 8
TOP-MENU-ENTRY command (SET, QUERY) 127
TRANSIENT members
adding to the MP-AID 38
listing 72

U

UDS-COMPARISON-TABLE members
adding to the MP-AID 38
deleting 45
UDS-TABLE members
adding to the MP-AID 38
deleting 45
deleting secondary 52
resetting 50
UPDATE-MPAID keyword 24
USER-COMPARISON-TABLE members
listing 73
USER-MEMBER members
adding to the MP-AID 38
deleting 45
listing 72
resetting 49

V

Virtual Dictionary Facility
creating
commands 152
defaults 152
overview 151
specifying
log dataset 155
logical blocksizes 156
number of statuses 154
syntax 156
virtual storage allocation 153
VIRTUAL INPUT/OUTPUT command (SET) 132
VSAM MP-AID 11
converting to BDAM 87

W

WAIT command 145