ASG
Software Solutions

ASG-Manager Products™
Quick Reference: Administration

Version 2.5
Publication Number: MPR0500-25-ADMIN
Publication Date: December 2000

The information contained herein is the confidential and proprietary information of Allen Systems Group, Inc. Unauthorized use of this information and disclosure to third parties is expressly prohibited. This technical publication may not be reproduced in whole or in part, by any means, without the express written consent of Allen Systems Group, Inc.

© 1998-2002 Allen Systems Group, Inc. All rights reserved.
All names and products contained herein are the trademarks or registered trademarks of their respective holders.

ASG Worldwide Headquarters Naples Florida USA | asg.com | info@asg.com
1333 Third Avenue South, Naples, Florida 34102 USA Tel: 239.435.2200 Fax: 239.263.3692 Toll Free: 800.932.5536 (USA only)

ASG Documentation/Product Enhancement Fax Form

Please FAX comments regarding ASG products and/or documentation to (239) 263-3692.

Company Name	Telephone Number	Site ID	Contact name

Product Name/Publication	Version #	Publication Date
Product:		
Publication:		
Tape VOLSER:		

Enhancement Request:

© 2002 Allen Systems Group, Inc.
All names and products are trademarks or registered trademarks of their respective holders.

ASG Support Numbers

ASG provides support throughout the world to resolve questions or problems regarding installation, operation, or use of our products. We provide all levels of support during normal business hours and emergency support during non-business hours. To expedite response time, please follow these procedures.

Please have this information ready:

- Product name, version number, and release number
- List of any fixes currently applied
- Any alphanumeric error codes or messages written precisely or displayed
- A description of the specific steps that immediately preceded the problem
- The severity code (ASG Support uses an escalated severity system to prioritize service to our clients. The severity codes and their meanings are listed below.)
- Verify whether you received an ASG Service Pack for this product. It may include information to help you resolve questions regarding installation of this ASG product. The Service Pack instructions are in a text file on the distribution media included with the Service Pack.

If You Receive a Voice Mail Message:

1. Follow the instructions to report a production-down or critical problem.
2. Leave a detailed message including your name and phone number. A Support representative will be paged and will return your call as soon as possible.
3. Please have the information described above ready for when you are contacted by the Support representative.

Severity Codes and Expected Support Response Times

Severity	Meaning	Expected Support Response Time
1	Production down, critical situation	Within 30 minutes
2	Major component of product disabled	Within 2 hours
3	Problem with the product, but customer has work-around solution	Within 4 hours
4	"How-to" questions and enhancement requests	Within 4 hours

ASG provides software products that run in a number of third-party vendor environments. Support for all non-ASG products is the responsibility of the respective vendor. In the event a vendor discontinues support for a hardware and/or software product, ASG cannot be held responsible for problems arising from the use of that unsupported version.

Business Hours Support

Your Location	Phone	Fax	E-mail
United States and Canada	800.354.3578	239.263.2883	support@asg.com
Australia	61.2.9460.0411	61.2.9460.0280	support.au@asg.com
England	44.1727.736305	44.1727.812018	support.uk@asg.com
France	33.141.028590	33.141.028589	support.fr@asg.com
Germany	49.89.45716.222	49.89.45716.400	support.de@asg.com
Singapore	65.6332.2922	65.6337.7228	support.sg@asg.com
All other countries:	1.239.435.2200		support@asg.com

Non-Business Hours - Emergency Support

Your Location	Phone	Your Location	Phone
United States and Canada	800.354.3578		
Asia	65.6332.2922	**Japan/Telecom**	0041.800.9932.5536
Australia	0011.800.9932.5536	**Netherlands**	00.800.3354.3578
Denmark	00.800.9932.5536	**New Zealand**	00.800.9932.5536
France	00.800.3354.3578	**Singapore**	001.800.3354.3578
Germany	00.800.3354.3578	**South Korea**	001.800.9932.5536
Hong Kong	001.800.9932.5536	**Sweden/Telia**	009.800.9932.5536
Ireland	00.800.9932.5536	**Switzerland**	00.800.9932.5536
Israel/Bezeq	014.800.9932.5536	**Thailand**	001.800.9932.5536
Japan/IDC	0061.800.9932.5536	**United Kingdom**	00.800.9932.5536
		All other countries	1.239.435.2200

ASG Web Site

Visit http://www.asg.com, ASG's World Wide Web site.

Submit all product and documentation suggestions to ASG's product management team at http://www.asg.com/asp/emailproductsuggestions.asp.

If you do not have access to the web, FAX your suggestions to product management at (239) 263-3692. Please include your name, company, work phone, e-mail ID, and the name of the ASG product you are using. For documentation suggestions include the publication number located on the publication's front cover.

Contents

Preface iii

About this Publication iii

Publication Conventions. iv

1 Member Types 65

2 Commands 97

Appendix A
Name, Status, Time, and User-Related-Selection 155

Secondary Selection Clauses: Name-related-selection. 155

Secondary Selection Clauses: Status-related-selection 156

Secondary Selection Clauses: Time and User-related-selection 157

Appendix B
Features Table. 159

Preface

This *ASG-Manager Products Quick Reference: Administration* (herein called Quick Reference) gives the syntax of all resticted commands; that is, all commands available to Controllers or Administrators only. The first time you use a command you will need to refer to the command specification. Once you are familiar with the command, but need reminding of the syntax, you can look up the syntax in this publication. This publication also gives the syntax of member types that can only be used by the Controllers or Administrators.

Allen Systems Group, Inc. (ASG) provides professional support to resolve any questions or concerns regarding the installation or use of any ASG product. Telephone technical support is available around the world, 24 hours a day, 7 days a week.

ASG welcomes your comments, as a preferred or prospective customer, on this publication or on any ASG product.

About this Publication

This publication consists of these chapters:

- Chapter 1, "Commands," provides an alphabetical list of the syntax for all restricted commands.
- Chapter 2, "Member Types," provides an alphabetical list of the syntax of member types that can only be fully used by Controllers or Administrators.

Publication Conventions

The following conventions apply to syntax diagrams that appear in this publication.

Diagrams are read from left to right along a continuous line (the "main path"). Keywords and variables appear on, above, or below the main path.

Convention	Represents
➤➤	at the beginning of a line indicates the start of a statement.
➤◄	at the end of a line indicates the end of a statement.
———➤	at the end of a line indicates that the statement continues on the line below.
➤———	at the beginning of a line indicates that the statement continues from the line above.

Keywords are in upper-case characters. Keywords and any required punctuation characters or symbols are highlighted. Permitted truncations are not indicated.

Variables are in lower-case characters.

Statement identifiers appear on the main path of the diagram:

```
➤———COMMAND———————————————————————————————————➤
```

A required keyword appears on the main path:

```
➤——— COMMAND ——— KEYWORD ———————————————————➤
```

An optional keyword appears below the main path:

```
➤——— COMMAND ———————————————————————————————➤
              └── KEYWORD ──┘
```

Where there is a choice of required keywords, the keywords appear in a vertical list; one of them is on the main path:

```
➤———COMMAND———┌─KEYWORD1─┐———————————————➤
              │ KEYWORD2 │
              └─KEYWORD3─┘
```

or

```
➤———COMMAND———┬─KEYWORD1─┬———————————————➤
              │ KEYWORD2 │
              └─KEYWORD3─┘
```

Where there is a choice of optional keywords, the keywords appear in a vertical list, below the main path:

Convention	Represents

```
➤──────COMMAND──────┬──────────────────────────────────────────────➤
                     │  ┌──KEYWORD1──┐
                     └──┴──KEYWORD2──┘
```

The repeat symbol, <<<<<<, above a keyword or variable, or above a whole clause, indicates that the keyword, variable, or clause may be specified more than once:

```
                                <<<<<<<<
➤──────COMMAND ────variable ──────────────────────────────────────➤
```

A repeat symbol broken by a comma indicates that if the keyword, variable, or clause is specified more than once, a comma must separate each instance of the keyword, variable, or clause:

```
                                <<< , <<
➤──────COMMAND ────variable ──────────────────────────────────────➤
```

The repeat symbol above a list of keywords (one of which appears on the main path) indicates that any one or more of the keywords may be specified; at least one must be specified:

```
                                <<<<<<<<<<<<<<<<
➤──────COMMAND──────┬──────────────────────────────────────────────➤
                     │  ┌──KEYWORD1──┐
                     └──┴──KEYWORD2──┘
```

The repeat symbol above a list of keywords (all of which are below the main path) indicates that any one or more of the keywords maybe specified, but they are all optional:

```
                                <<<<<<<<<<<<<<<<
➤──────COMMAND──────┬──────────────────────────────────────────────➤
                     │  ┌──KEYWORD1──┐
                     └──┴──KEYWORD2──┘
```

Allen Systems Group, Inc. uses these conventions in publications:

Convention	Represents
ALL CAPITALS	Directory, path, file, dataset, member, database, program, command, and parameter names.
Initial Capitals on Each Word	Window, field, field group, check box, button, panel (or screen), option names, and names of keys. A plus sign (+) is inserted for key combinations (e.g., Alt+Tab).
`lowercase italic monospace`	Information that you provide according to your particular situation. For example, you would replace *`filename`* with the actual name of the file.
`Monospace`	Characters you must type exactly as they are shown. Code, JCL, file listings, or command/statement syntax. Also used for denoting brief examples in a paragraph.
Vertical Separator Bar (|) with underline	Options available with the default value underlined (e.g., Y|<u>N</u>).

1 Member Types

ATTRIBUTE-GROUP Syntax

Defines a group of ATTRIBUTE-TYPE members.

```
>>──ATTRIBUTE-GROUP──────────────────────────────────────────>
>──┬──────────────────────────────────────────────────────────┬──>
  │                <<<<<<<<<<<<<<<<<<<<<<< , <<<<<<<<<<<<<<<<<<<<<<
  └─CONTAINS──┬─a-type──┬──────────────┬──┬─OPTIONAL NO──┬──┤
              │         │ <<<<<<<<<<<<  │  ├─OPTIONAL WARN─┤
              │         └─ELSE a-type───┘  └─OPTIONAL YES──┘
              └─a-group──────────────────┘
>──┬──────────────────────────────────────────────────────────>
  └─common-clauses──┘
>──┬─;──┬──────────────────────────────────────────────────────>
   └─.──┘
```

where:

a-type is an ATTRIBUTE-TYPE member name.

a-group is an ATTRIBUTE-GROUP member name.

common-clauses are any of the clauses common to all member types.

Note:

The commas shown in the above syntax are required when defining an ATTRIBUTE-GROUP member via the command interface.

Refer to *ASG-Manager Products Dictionary/Repository User's Guide* for details of the common clauses.

ATTRIBUTE-TYPE

Defines a user-defined attribute and how both user-defined and ASG-supplied clauses and keywords display in the panel interface.

```
>>- ATTRIBUTE-TYPE --+-data-definition-------------------+-->
                     |-decimal-number-definition--------|
                     |-time-definition------------------|
                     |-keyword-definition---------------|
                     |-integer-definition---------------|
                     |-name-definition------------------|
                     |-character-string-definition------|
                     |-text-definition------------------|
                     |-free-form-text-definition--------|

>--+-SKELETON-HELP 's-help'-+--+-SKELETON-CODE --+-1-+-->
   |                        |                    |-2-|
                                                 |-3-|
                                                 |-4-|
                                                 |-5-|
                                                 |-6-|
                                                 |-7-|
                                                 |-8-|

>--+-SKELETON-TEXT 'prompt'-+--+-LONG-NAME --+-'udr/udrs'-----+-->
   |                        |                |-'keyword-list'-|

>--+-EDIT-CODE-1 --+-1-+--+-EDIT-CODE-2 --+-1-+-->
                   |-2-|                  |-2-|
                   |-3-|                  |-3-|
                   |-4-|                  |-4-|
                   |-5-|                  |-5-|
                   |-6-|                  |-6-|
                   |-7-|                  |-7-|
                   |-8-|                  |-8-|

>--+-EDIT-EXEC-1 'executive'-+--+-EDIT-EXEC-2 'executive'-+-->

>--+-REPEAT-CODE --+-S-+--+-PROMPT-CODE --+-I-+-->
                   |-M-|                  |-K-|
                                          |-M-|
                                          |-N-|
                                          |-O-|
                                          |-P-|

>--+-common-clauses-+--+-HELP help-+-->
   |                |

>--+-;-+-->-<
   |-.-|
```

where:

date-definition is

```
➤── DATE identifier ──┬──────────────────────────────────────────────┬──➤
                     <<<<<<<<<<<<<<<<<<<<<<<<<<<<<<<<<<<<<<<<<<<<<<<<<<<
                     │──INDEXED-BY ──┬──PRESENCE ──┬──────────────────│
                     │               └──VALUE ─────┘                  │
                     │          <<<,<<<                               │
                     │──VALUES 'date' ────────────────────────────────│
                     │ │                                <<,<<        │
                     │ └──NORMALIZED-VALUES ndate ──────────────────┘│
                     │                     <<<,<<<                    │
                     │──MINIMUM-VALUES 'date' ────────────────────────│
                     │ │                                <<,<<        │
                     │ └──NORMALIZED-MINIMUM-VALUE ndate ───────────┘│
                     │                     <<<,<<<                    │
                     │──MAXIMUM-VALUES 'date' ────────────────────────│
                     │ │                                <<,<<        │
                     │ └──NORMALIZED-MAXIMUM-VALUE ndate ───────────┘│
                     └──multivalues ──────────────────────────────────┘
```

where:

identifier is

```
                          <<<<< ,<<<<<<
➤── IDENTIFIED-BY user-keyword ──────────────────────────────────────➤
```

user-keyword is up to 32 characters from the standard character set for names but must not begin with an underscore.

date is a date in the format defined in the DCUST installation macro. The default is:

```
➤── day ──┬──month──┬──year ──────────────────────────────────────➤
            ├──JAN────┤
            ├──FEB────┤
            ├──MAR────┤
            ├──APR────┤
            ├──MAY────┤
            ├──JUN────┤
            ├──JUL────┤
            ├──AUG────┤
            ├──SEP────┤
            ├──OCT────┤
            ├──NOV────┤
            └──DEC────┘
```

day is one or two numeric characters in the range 1 or 01 to 31.

month is one or two numeric characters in the range 1 or 01 to 12.

year is two or four numeric characters in the range 00 to 99 or 1000 to 2999, specifying the last two or all four characters of the year.

ndate is a date in the format *yyyyddd*.

where: *yyyy* is four numeric characters specifying the year and *ddd* is three numeric characters (in the range 001 to 365) specifying the number of the day within the year.

multivalues is

```
➤──── MULTIPLE-VALUES ──┬──────────────────────────┬──────────➤
                        ├──MINIMUM-NUMBER n4 ──────┤
                        └──MAXIMUM-NUMBER n4 ──────┘
```

where: *n4* is an integer in the range 1 through 32767.

decimal-number-definition is

```
➤────DECIMAL-NUMBER identifier──┬<<
```

where:

hour is one or two numeric characters in the range 0 or 00 to 24.

minute is one or two numeric characters in the range 0 or 00 to 59.

second is one or two numeric characters in the range 0 or 00 to 59. The inclusion of seconds is optional.

ntime is a time in the format *hhmmss*.

hhmmss is six numeric characters in the range 000000 to 240000.

where:

hh is hour.

mm is the minute.

ss is the seconds.

identifier and *multivalues* are defined above.

keyword-definition is:

```
                  <<<<<<<<<<<<<<<<<<   <<<<<<<,<<<<<<<
 ►──── KEYWORD ──┬──identifier──────┬──┬──────────────┬──────────────►
                 └──NAMED keyword───┘  ├──index───────┤
                                       └──multivalues─┘

 ►──── VALUES name ──────────────────────────────────────────────►
```

keyword is a string of up to 32 characters from the standard character set for names but must not begin with an underscore.

index is

```
 ►──── INDEXED-BY──┬──PRESENCE──┬──────────────────────────►
                   └──VALUE─────┘
```

name is a string of up to 32 characters from the standard character set for names but must not begin with an underscore.

identifier and *multivalues* are defined above.

integer-definition is:

```
➤──INTEGER identifier ──┬──────────────────────────────────┬──➤
                        <<<<<<<<<<<<<<<<<<<<<<<<<<<<<<<<<<<<
                        │                                  │
                        │──index ──────────────────────────│
                        │          <<,<<                   │
                        │──VALUES value────────────────────│
                        │──MINIMUM-VALUE value─────────────│
                        │──MAXIMUM-VALUE value─────────────│
                        │──MINIMUM-LENGTH n1───────────────│
                        │──MAXIMUM-LENGTH n1───────────────│
                        │──multivalues─────────────────────│
```

value is an integer of up to 18 digits, optionally preceded by a sign character.

identifier, *index*, *n1*, and *multivalues* are defined above.

name-definition is

```
➤──NAME identifier ─────┬──────────────────────────────────┬──➤
                        <<<<<<<<<<<<<<<<<<<<<<<<<<<<<<<<<<<<
                        │                                  │
                        │──index ──────────────────────────│
                        │          <<,<<                   │
                        │──VALUES string───────────────────│
                        │──MINIMUM-VALUE string────────────│
                        │──MAXIMUM-VALUE string────────────│
                        │──MINIMUM-LENGTH n2───────────────│
                        │──MAXIMUM-LENGTH n2───────────────│
                        │──multivalues─────────────────────│
```

string is a sting that obeys the rules for repository member names.

n2 is an integer not greater than 32.

identifier, *index*, and *multivalues* are defined above.

character-string-definition is

```
➤──CHARACTER-STRING identifier──┬──────────────────────────────────┬──➤
                                <<<<<<<<<<<<<<<<<<<<<<<<<<<<<<<<<<<<
                                │                                  │
                                │──index ──────────────────────────│
                                │          << ,<<                  │
                                │──VALUES 'string'─────────────────│
                                │──MINIMUM-VALUE 'string'──────────│
                                │──MAXIMUM-VALUE 'string'──────────│
                                │──MINIMUM-LENGTH n3───────────────│
                                │──MAXIMUM-LENGTH n3───────────────│
                                │──multivalues─────────────────────│
```

where:

string is a string of not more than 256 characters.

n3 is an integer in the range 1 through 256.

identifier, *index*, *string*, and *multivalues* are defined above.

text-definition is

```
>>──TEXT identifier ──────<<<<<<<<<<<<<<<<<<<<<<<<<<<<<<<──────────────────>>
                          │──INDEXED-BY PRESENCE ──────│
                          │──MINIMUM-LINES n4 ─────────│
                          │──MAXIMUM-LINES n4 ─────────│
                          │──MINIMUM-LENGTH n5 ────────│
                          └──MAXIMUM-LENGTH n5 ────────┘
```

where:

n5 is an integer in the range 1 through 246.

identifier and *n4* are defined above.

free-form-text-definition is:

```
>>──FREE-FORM-TEXT identifier ──<<<<<<<<<<<<<<<<<<<<<<<<<<<<<<<──────────>>
                                │──INDEXED-BY PRESENCE ──────│
                                │──MINIMUM-LINES n4 ─────────│
                                │──MAXIMUM-LINES n4 ─────────│
                                │──MINIMUM-LENGTH n6 ────────│
                                └──MAXIMUM-LENGTH n6 ────────┘
```

identifier and *n4* are defined above.

n6 is an integer in the range 1 through 248.

s-help is a string of up to 61 characters.

prompt is one or more text strings within which you can specify the following parameters: &P1, &P2, &P3, &P4, &P5, &P6, &P7.

executive is the name of an EXECUTIVE member on the MP-AID.

udr/udrs is a renamed UDR or UDRS clause name.

keyword-list is two or more keywords each separated by a blank space.

help is one or more lines of free form text.

common-clauses are any of the clauses common to all member types.

Note:

The commas and delimiters shown in the above syntax are required when creating an ATTRIBUTE-TYPE member via the command interface.

Refer to *ASG-Manager Products Dictionary/Repository User's Guide* for details of the common clauses.

Refer to *ASG-ControlManager User's Guide* for details of the character set for member names.

Refer to *ASG-Manager Products Procedures Language* for details of the EXECUTIVE-ROUTINE member type.

COMMAND-STREAM

Refer to "Member Types" in the *ASG-Manager Products Quick Reference* for details of the COMMAND-STREAM member type.

DOCUMENT

Refer to "Member Types" in the *ASG-Manager Products Quick Reference* for details of the DOCUMENT member type.

EXECUTIVE-ROUTINE

Refer to the Procedures Language section of the *ASG-Manager Products Quick Reference* for details of the EXECUTIVE-ROUTINE member type.

FMT-SCREEN

Defines a formatted panel for the user interface.

```
                                                  <<<<<<<
>>---FMT-SCREEN ---TYPE-panel-type  ---CONTENTS string1------------------>
>------------------------------------------------------------------------------------------------------------>
    |-SEE -|-member-name1 FOR HELP  ----------------|  |-MPAID-NAME name -|
         |  <<<<<<<<<<<<<<<<<<<<<<<<
         |-member-name2 FOR HELP  ----------------|
         |  <<<<<<<<<<<<<<<<<<<
```

```
PROTECTED-normal string2      UNPROTECTED-normal string2

UNPROTECTED-DARK string2      FIELD-MARK string2

LIST-BODY string2             HELP-IDENTIFIER string2

DECLARE-FIELDS  <<<<<<<<<<<<<<<<<<<<<<<<<<<<<<<<<<<<
                IN variable-name1 type length mode
                <<<<<<<<<<<<<<<<<<<<<<<<<<<<<<<<<<<<
                OUT variable-name1 type length mode

        <<<<<<<<<<<<<<                <<<<<<<<<<<<<<
OUTPUTS variable-name2        INPUTS variable-name2

CALLS  exec   AT  clause                PASSING  field
       panel      option-string                   <<<<<
                  key3 MESSAGE num x              string3

COMMAND-LINE keyword4         FUNCTION-KEY  BOTTOM
                                            LINE nn

ACTION-KEY keyword5           MESSAGE  BOTTOM
                                       LINE nn

HEADER text   common-clauses   ;
                               .

;
.
```

where:

panel-type is one of these available types: MENU, LIST, INPUT, or OUTPUT.

string1 consists of field control characters, specifying the type of field (protected/unprotected) and its position on the panel and/or static text.

member-name1 is the name of an INFOBANK-PANEL or FMT-SCREEN member that contains the help text.

member-name2 is the name of any member type other than INFOBANK-PANEL or FMT-SCREEN.

field-name is the name of a field, defined in the DECLARE-FIELDS clause or specified via the OUTPUTS and INPUTS clauses of the FMT-SCREEN member definition.

name is a maximum of seven characters, beginning with an alphabetic character and otherwise complying with the MANAGER Products naming standards.

keyword1 is either YES or NO.

keyword2 is either REUSE, NEW, or HOLD.

string2 is a maximum of four characters. Alphabetic and special characters can be used.

variable-name1 is the name of a global variable that defines one field of the panel. The variable is defined in the DECLARE-FIELDS clause of the FMT-SCREEN member by which it is used. ASG-supplied global variables have the prefix MDG_. Please use another naming convention for user-defined global variables.

type is either ALPHANUMERIC or NUMERIC.

length is an integer specifying the maximum length of the variable.

mode is one of the following:

- LOWER translate contents to lower case
- UPPER translate contents to upper case
- MIXED accept contents entered in mixed case

If mode is not defined, the UPPER keyword is the default.

variable-name2 is the name of a global variable that defines one field of the panel. The variable itself is defined in an ITEM member. ASG-supplied global variables have the prefix MDG_. Please use another naming convention for user-defined global variables.

exec is the MP-AID name or the repository name of an EXECUTIVE-ROUTINE or SEXEC member containing Manager Products commands and/or procedures language.

panel is the repository name of a FMT-SCREEN member of any type.

clause is one of these:

- PREINIT
- INIT
- BEFORE
- AFTER
- PROCESS
- COMBIN
- SELECT
- EXIT
- CANCEL
- HELP

option-string is a string as defined in the CONTENTS clause of a FMT-SCREEN member of the type MENU.

key3 is one of these:

- NOINPUT
- NOTFOUND
- NOTPGM
- NOCOMBIN
- NOLINES
- NONUMERIC
- NOHELP
- NOSELECT

num is a five-digit integer defining the message number.

x is a one character alphabetic suffix, which denotes the type of output message.

field is the name of a global variable that defines an input field of the panel. The variable itself is defined in an ITEM member. ASG-supplied global variables have the prefix MDG_. Please use another naming convention for user-defined global variables.

string3 defines a parameter consisting of alphanumeric and/or special characters. This parameter will be passed on to the specified exec for processing.

keyword4 is one of these:

- BOTTOM
- TOP
- NO
- LINE *nn*

nn is an integer, specifying a line number on the panel.

keyword5 is one of these:

- ENTER Start a process.
- HELP Call the specified help.
- EXIT Return to the next application point.
- REFRESH Refresh the panel, delete previous entries.
- BACKWARD Scroll backward.
- FORWARD Scroll forward.
- CANCEL Return to the previous panel.

text is one line of text that can consist of several strings with a maximum length of 50 characters.

common-clauses are any of the clauses common to all member types.

Refer to *ASG-Manager Products Dictionary/Repository User's Guide* for details of common clauses.

FORMAT

Specifies the layout of output from the REPORT and BULK REPORT commands

```
>>──FORMAT──────────────────────────────────────────────────────>
>──┬──────────────────────────────────────────────────────────┬──>
  ├─MP-AID ──┬──────────mp-aid-format-name──┬
  └─MPAID ───┘
>──┬──────────────────────────────────────────────────────────┬──>
  └─ common-clauses ─┘
>──CONTENTS ──────────┬<<
```

format line is:

```
➤──────format-line-number──────────────────────────────────────────➤
                                   │──output-line-specification──│
```

where *format-line-number* is:

```
➤──F──┬─M─┬──n──────────┬──────────:──────────────────────────────➤
      │   │             │
      └─S─┘             └──Rr──┘
```

where:

F specifies that the line is a format line.

M specifies that the output should appear on a new line.

S specifies that the output should appear on a new page.

n is an integer in the range 1 to 9999 identifying a format line number for the corresponding part of the output.

R*r* specifies that the current format line may be processed *r* times.

r being an integer in the range 1 to 32767.

output-line-specification is:

```
      <<<<<<<<<<<<<<<<<<<<<<<<
                 <<<<  ,  <<<<
➤──────┬──────┬──specifier──────────────────────────────────────────➤
       │──q───┘
```

q is an unsigned integer, being a repeat count for the specifier or group of specifiers immediately following.

specifier is:

```
➤──┬──/──────────────────────────────────────────────────────────➤
   │──X──────────┬
   │──Cn─────────┤
   │──'string'───┤
   │──Dm─────────┤──────────────────────────────────────────────┤
   │──Um─────────┤  │──.field-width──────────────────────────┤
                     │                   │──.R──┬──┤
                                         │──.C──┘
```

where:

`/` denotes the end of a physical output line and causes a carriage return/line feed sequence on the output device.

`X` denotes a skip of one character position on the output line.

`C`*`n`* specifies that the following output is to start at column number *`n`* where *`n`* is an unsigned integer.

`string` denotes any string of printable characters, space characters being regarded as printable.

`D`*`m`* identifies a parameter number valid for the current format line, *`m`* being an unsigned integer.

`U`*`m`* identifies a parameter number valid in a format line, *`m`* being an unsigned integer.

`.field-width` is an unsigned integer preceded on the same line immediately by a period, specifying the width of the field in which the preceding parameter is to be positioned. Parameters are left-justified unless otherwise is specified.

`.R` specifies that the immediately preceding parameter is to be right-justified within the specified field.

`.C` specifies that the immediately preceding parameter is to be centered within the specified field.

`comment-line` is a string of printable characters, a space character being considered printable, comprising a line of comment. A comment line must begin with an asterisk (*).

GLOBAL-PROFILE

Establishes a common environment for a group of users.

```
>>---GLOBAL-PROFILE-------------------------------------------------->
>------------------------------------------------------------------------>
    |-common-clauses-|
                <<<<<<<
>---CONTENTS command------------------------------------------------->
>------------------------------------------------------------------------>
    |- ; -|
    |- . -|
```

where:

`common-clauses` are any of the clauses available to all member types.

`command` is any permissible Manager Products command available at your installation.

GROUP

Refer to "Member Types" in the *ASG-Manager Products Quick Reference* for details of the GROUP member type.

HDS-TABLE

Specifies the options for the enable HDS table function in ToolSet SERVICES, which generates an HDS table and translation executive routine for ManagerView.

```
>>---HDS-TABLE ------------------------------------------------------>
                                <<<<<<<<<<<<<<<
>---CONTAINS ---+---mem-type ---------------------------------------->
                |
                +---mem-type-group
                                  <<<<<<<<<<<<<<<
>---RELATIONSHIPS ---+---rel-type ----------------------------------->
                     |
                     +---rel-type-group
>-----+-------------------------------------+------------------------>
      +---MPAID-NAME hds-table-name---------+
>-----+-------------------------+------------------------------------>
      +---SEE rim-name----------+
>-----+-----------------------------------------+------------------->
      +---TRANSLATION-EXEC exec-name------------+
>-----+-------------+------------------------------------------------>
      +---UDR-------+
>-----+-----------------------+-----+-----+-------------------------->
      +---common-clauses------+     +---;-+
                                    +---.-+
```

where:

mem-type is a MEMBER-TYPE member name.

mem-type-group is a MEMBER-TYPE-GROUP member name.

rel-type is a RELATIONSHIP-TYPE member name.

rel-type-group is a RELATIONSHIP-GROUP member name.

hds-table-name is the name to be given to the generated HDS table stored on the MP-AID.

rim-name is the name of the HIERARCHY member for the desired RIM.

exec-name is the name to be given to the generated translation executive routine on the MP-AID.

common-clauses are any of the clauses available to all member types. See the *ASG-Manager Products Dictionary/Repository User's Guide* for more information.

HIERARCHY

Specifies the member types contained in the repository information model (RIM).

```
>>--- HIERARCHY ---------------------------------------------------->
                 |--- MP-AID-NAME name ---|

>--- CONTAINS ---  <<<<<<<<,<<<<<
                 |--- mem-type ---------------|
                 |--- mem-type-group ---------|

>------------------------------------------------------------------>
  |--- RELATIONSHIPS ---  <<<<<<<,<<<<<<
  |                      |--- rel-type ---------|
  |                      |--- rel-type-group ---|

>------------------------------------------------------------------>
  |--- ALTERNATIVE-RELATIONSHIP  <<<<,<<<<<<  else-clause ---|

>------------------------------------------------------------------>
  |  <<<<<<<
```

rel-type is a RELATIONSHIP-TYPE member name.

rel-group is a RELATIONSHIP-GROUP member name.

else-clause is:

```
                                   <<<<<<<<<<<<<<<<<<<<<<<<<<<<<<
➤──── rel-type ──┬──────────────┬──ELSE rel-type ──┬──────────────┬──➤
                 ├──SOURCE ─────┤                  ├──SOURCE ─────┤
                 └──TARGET ─────┘                  └──TARGET ─────┘
```

where *rel-type* is as defined above.

r is an integer in the range 1 to 12192.

type is up to 32 characters from the standard character set for names but must not begin with an underscore.

attribute-clause is:

```
➤──┬─ attr-group ──────────────────────┬──┬──────────────────────────┬──➤
   └─ attr-type ──┬──────────────────┬──┤  ├──OPTIONAL YES ──────────┤
                  ├<<<<<<<<<<<<<<<<<<<<<<┤  ├──OPTIONAL NO ───────────┤
                  └──ELSE attr-type ─────┘  └──OPTIONAL WARN ─────────┘
```

where:

attr-group is an ATTRIBUTE-GROUP member name.

attr-type is an ATTRIBUTE-TYPE member name.

udr/udrs-att-type is an ATTRIBUTE-TYPE member name. The member defines a UDR clause or UDRS subclause.

s is an integer in the range 1 to 254.

parameters is:

```
➤──── IS PARAMETER-NUMBER n1 LINE n2 ──┬──────────────┬──➤
                                       └──keyword ────┘
```

where:

n1 and *n2* are any integers in the range 1 to 32767.

keyword is:

```
➤──── KEYWORD IS PARAMETER-NUMBER n3 ──┬──────────────┬──➤
                                       └──LINE n4 ────┘
```

where:

n3 and *n4* are any integers in the range 1 to 32767.

n5 is an integer which is a multiple of three in the range 2001 to 32767.

common-clauses are any of the clauses common to all member types with the exception of the SEE clause which is used in the HIERARCHY member type for special purposes.

Note:

The commas shown in the above syntax are required when creating HIERARCHY members via the command interface.

Refer to *ASG-Manager Products Dictionary/Repository User's Guide* for details of the common clauses. Refer to *ASG-ControlManager User's Guide* for details of the character set for names.

INFOBANK-PANEL

Defines a panel in the User-Defined InfoSystem.

```
>>--INFOBANK-PANEL--------BRANCH-NAME name--------TITLE 'string'-------->
>--ISSUE-DATE yymmdd--+------------------------------------------------>
                      |                <<<< , <<<<
                      |--SU-CODES code-list--|
>--+--SYSTEMS-ADMINISTRATOR--+--+--MENU--+------------------------------>
   |--CONTROLLER-------------|  |
   |--MASTER-OPERATOR--------|  |
>--NEXT-PANEL--+--panel-name--+--LAST-PANEL--+--panel-name--+--------->
               |--RETRACE------|             |--RETRACE----|
>--LAST-MENU--+--panel-name--+------------------------------------------>
              |--RETRACE------|
>--+--<<
```

where:

name is a name up to 32 characters long, obeying the rules for repository member names.

string is one or two delimited charater strings of not more than 50 character each.

code-list is the accessibility attribute.

yymmdd represents a data between 830631 and 991231.

panel-name is the name of an INFOBANK-PANEL member.

string-1 is the character or characters that the user is required to enter on the command line to indicate the next panel selected.

string-2 is a character string representing an index entry in the InfoBank index.

character is a character used to indicate highlighting (the default is !) or end-of-field (the default is ¬).

common-clauses are any of the clauses common to all member types text represents the text of the panel, laid out as it is required to appear on the screen.

text represents the text of the panel, laid out as it is required to appear on the screen.

ITEM

Documents the lowest levels of data, for instance data elements. The ITEM member type also defines global varaibles.

```
>>--- ITEM ---+-------------------------+---+-----------------------+-->
               +-TITLE text1 -----------+   +-MODE keyword ---------+
>---+-------------------------+---+------------------------------------>
    +-INPUT-VALUE <<<<<< string-+   +-DEFAULTED-AS form description-+
>---+-----------------+---+------------------------------------------>
    +-HELP text2 ------+   +-common-clauses -----+
>---+---+---+-------------------------------------------------------><
        +-;-+
        +-.-+
```

where:

text1 is a one-line title that can consist of several strings with a maximum length of 40 characters.

keyword is one of the following:

- LOWER Translate contents to lower case.
- UPPER Translate contents to upper case.
- MIXED Accept contents entered in mixed case.

string specifies a value whose type and length depends on the form description defined in the DEFAULTED-AS clause of the ITEM member.

Refer to *ASG-Manager Products Dictionary/Repository User's Guide*, for details of *form-description*.

text2 is free-form text of unlimited length.

common-clauses are any of the clauses common to all member types.

Refer to the *ASG-Manager Products Dictionary/Repository User's Guide* for details of *common clauses*.

LOGON-PROFILE

Establishes a user's credentials to log on to Manager Products.

```
>>-- LOGON-PROFILE ---------------PASSWORD password-------------------->
>--+-------------------------------------------------------------------->
   |  IDENTITY logon-identifier  |
>--+-------------------------------------------------------------------->
   |  LOGON --+-SHARED    -+-+-------+-CONTROLLER -+
            |  EXCLUSIVE  | |       |             |
>--+-------------------------------------------------------------------->
   |  common clauses  |
- - - - - - - - - - - - - - - - - - - - - - - - - - - - - - - - - - - - - -
>--+-------------------------------------------------------------------->
   |  EXECUTIVE-LEVEL --+-----n-----+
   |  EXEC-LEVEL        |           |
   |                    <,<         |
   |  EXECUTIVE-GROUP --+-----n-----+
   |  EXEC-GROUP        |           |
>--+-------------------------------------------------------------------->
   |  ONLINE-GLOBAL global-profile-name  |
>--+-------------------------------------------------------------------->
   |  BATCH-GLOBAL global-profile-name  |
>--+-------------------------------------------------------------------->
   |  COMMON-GLOBAL global-profile-name  |
>--+-------------------------------------------------------------------->
   |            <<<<<<<  |
   |  CONTENTS command  |
>--+-;-------------------------------------------------------------------->
     |-.-|
```

where:

password and *logon-identifier* conform to the rules appearing in the MP-AID CREATE command syntax (see *ASG-Manager Products Systems Administrator's Guide*)

common-clauses are any of the clauses available to all member types.

n must be in the range 0 to 255

global-profile-name is inserted in the dictionary as a dummy GLOBAL-PROFILE if it does not already exist. If the name refers to a dictionary member that is not a GLOBAL-PROFILE, an encoding error occurs.

command is any permissible Manager Products command available at your installation. Each command must be on a separate line, terminated by a terminator, and entered in upper-case characters.

Note:

The clauses below the dotted line are effective only if the Systems Adminstrator's Environment Control Facility is installed.

MEMBER-TYPE

Defines an entity member type.

```
➤── MEMBER-TYPE ┬─IS──────┬─base-member-type ──────────────────────────────➤
               └─BASED-ON─┘

➤──┬──────────────────────────────────────────────────────────────────────┬➤
   │                        <<<<<,<<<<<<                                  │
   └─ENCODE-KEYWORDS user-keyword                                         ─┘

➤──┬──────────────────────────────────────────────────────────────────────┬➤
   │                        <<<<<,<<<<<<                                  │
   └─INTERROGATE-KEYWORDS user-keyword                                    ─┘

➤──┬──────────────────────────────────────────────────────────────────────┬➤
   │                        <<<<<,<<<<<<                                  │
   └─REPORT-DOWN-TO-KEYWORDS user-keyword                                 ─┘

➤──STANDARD-LITERAL "literal"──┬──────────────────────────────────────────┬➤
                               └─SHORT-LITERAL "short-literal"────────────┘

➤──┬──────────────────────────┬──┬──────────────────────────────────────┬➤
   └─PLURAL-LITERAL "literal"─┘  └─LONG-LITERAL "literal"                ─┘

➤──┬──────────────┬──┬──────────┬──────┬──────┬──────────────────────────➤
   └─LEVEL n      ─┘  └─RECURSIVE─┬─YES─┬─┘
                                  └─NO  ─┘

➤──┬──────────────────────────────────────────────────────────────────────➤
   │  <<<<<<<<<<<<<<<<<<<<<<<<<<<<<<<<<<<<<<<<<<<<<<<<<<<<<<<<<<<<<<<<<<<<<<│
   └─RELATIONSHIPS VIA ea-relationship                                    ─┘

➤──┬──────────────────────────────────────────────────────────────────────➤
   │                 <<<<<<<  ,  <<<<<<<                                  │
   └─ATTRIBUTES attributes-clause                                         ─┘
```

```
►──┬──────────────────────────────────────────────────────────────────────────►
   │                          <<<<<<<  ,  <<<<<<<
   └──GENERIC-ATTRIBUTES attributes-clause──┘

►──┬──────────────────────────────────────────────────────────────────────────►
   │
   └──AUTO-REF-STRING "ref-string"──┘

►──┬──────────────────────────────────────────────────────────────────────────►
   │
   └──LONG-NAME ──┬──"MMR-DISAPPEAR"──┐
                  └──"encode-keyword"──┘

►──┬──────────────────────────────────────────────────────────────────────────►
   │                <<<<<<<<<<<<
   └──NAMING "convention"──┘  └──NAMING-EXIT "executive"──┘

►──ALIAS "alias" ──┬──────────────────────────────────────────────────────────►
                   │                   <<<  ,  <<<
                   └──SEE ──┬──attr-type──┐
                            └──attr-group──┘

►──┬──────────────────────────────────────────────────────────────────────────►
   │
   └──common-clauses──┘

►──┬──────────────────────────────────────────────────────────────────────────►
   │
   └──HELP help──┘

►──┬──;──┐──────────────────────────────────────────────────────────────────►
   └──.──┘
```

where:

base-member-type is an ASG-supplied member type.

user-keyword is up to 32 characters from the character set for names but must not begin with an underscore.

literal is a string of up to 32 characters.

short-literal is a string of up to 12 characters.

n is an integer in the range 0 to 255.

ea-relationship is:

```
►──── clause ──┬──DISALLOWED──────────────────────────────────────────────────►
               │
               └──ALLOW ──┬──mem-type──────────┬──────────────────────────────►
                          ├──mem-type-gp───────┤  └──DUMMY ──┬──mem-type──┐
                          ├──rel-type──────────┤             └──rel-type──┘
                          └──rel-grp───────────┘
```

where:

clause is any clause that defines an EA relationship between repository members.

mem-type is a MEMBER-TYPE member name.

mem-type-gp is a MEMBER-TYPE-GROUP member name.

rel-type is a RELATIONSHIP-TYPE member name.

rel-grp is a RELATIONSHIP-GROUP member name.

attributes-clause is:

```
➤──┬─ attr-group ──────────────────────┬──┬──────────────────────────────┬──➤
   └─ attr-type ──┬──────────────────┬──┘  ├──OPTIONAL YES ──────────────┤
                  │<<<<<<<<<<<<<<<<<<<│     ├──OPTIONAL NO ───────────────┤
                  └─ ELSE attr-type ─┘     └──OPTIONAL WARN ──────────────┘
```

where:

attr-group is an ATTRIBUTE-GROUP member name.

attr-type is an ATTRIBUTE-TYPE member name.

ref-string is a string of up to 80 characters.

encode-keyword is the encode keyword of a second level IMS member type.

convention is a string of characters from the standard and extended character set for names, optionally including the special characters # * _ > < = :.

executive is an EXECUTIVE member name.

attr-type and *attr-group* are as defined above.

common-clauses are any of the clauses common to all member types except for the SEE and ALIAS clauses which are used for special purposes in the MEMBER-TYPE member type.

help is one or more lines of free form text.

Note:

The commas and delimiters shown in the above syntax are required when creating MEMBER-TYPE members via the command interface.

Refer to *ASG-ControlManager User's Guide* for details of the character set for names.

Refer to *ASG-Manager Products Dictionary/Repository User's Guide* for details of the common clauses.

MEMBER-TYPE-GROUP

Defines a logical group of member types.

```
➤──MEMBER-TYPE-GROUP ──────────────────────────────────────────➤
                   <<<<<, <<<<<<<
➤── CONTAINS ──┬─mem-type-group ─┬──┬──────────────────────────➤
               └─mem-type ───────┘  │          <<< , <<<
                                    └──SEE ──┬─mem-type ─┬──┐
                                             └─rel-type ─┘  │
➤──┬──────────────────────────┬──┬──────────────────────────➤
   └─OPTION 'option' ─┘  └─OPTION-NAME 'name' ─┘
➤──┬──────────────────────────┬──┬──────────────────────────➤
   └─OPTION-TEXT 'description'─┘  └─common-clauses ─┘
➤──┬─; ─┬──────────────────────────────────────────────────➤
   └─. ─┘
```

where:

mem-type-group is a MEMBER-TYPE-GROUP member name.

mem-type is a MEMBER-TYPE member name.

rel-type is a RELATIONSHIP-TYPE member name.

option is a string of up to 2 characters.

name is a string of up to 15 characters.

description is a string of up to 50 characters.

common-clauses are any of the clauses available in all member types with the exception of the SEE clause which is used in the MEMBER-TYPE-GROUP member type for special purposes

Note:

The commas and delimiters shown in the above syntax are required when defining MEMBER-TYPE-GROUP members via the command interface.

Refer to *ASG-Manager Products Dictionary/Repository User's Guide* for details of the common clauses.

MODULE

Refer to the "Member Types" section of the *ASG-Manager Products Quick Reference* for details of the MODULE member type.

OBSOLETE-DEFINITION

Refer to the "Member Types" section of the *ASG-Manager Products Quick Reference* for details of the OBSOLETE-DEFINITION member type.

RELATIONSHIP-CLASS

Defines a relationship type class.

```
>>---RELATIONSHIP-CLASS ------------------------------------------>
>---PRIMARY-NAME name ---+------------------------------------------>
                         |  INVERSE-NAME name  |
>---+------------------------------------------------------------>
    |  common clause  |
>---+---;---+------------------------------------------------------>
        |   |
        |   |
        |   |
```

`else-clause` is:

```
                                  <<<<<<<<<<<<<<<<<<<<<<<<<<<
➤──── rel-type ──┬──────────┬──┬──────────────────────────┬──┬──────────┬──────────────────➤
                 ├─ SOURCE ─┤  │ ELSE rel-type            │  ├─ SOURCE ─┤
                 └─ TARGET ─┘  │                          │  └─ TARGET ─┘
                               └──────────────────────────┘
```

where:

`rel-type` is as defined above.

`common-clauses` are any of the clauses common to all member types.

Note:

The commas shown in the above syntax are required when defining RELATIONSHIP-GROUP members via the command interface.

Refer to *ASG-Manager Products Dictionary/Repository User's Guide* for details of the common clauses.

RELATIONSHIP-TYPE

Defines a relationship member type.

```
➤➤──── RELATIONSHIP-TYPE ──────────────────────────────────────────────────────➤

➤──── PRIMARY-NAME name ──┬──────────────────────────┬──────────────────────────➤
                          └── INVERSE-NAME name ─────┘

➤──┬── CLASS class ──────┬──┬── STANDARD-LITERAL 'literal' ──┬──────────────────➤
   │                     │  │                                │
   └─────────────────────┘  └────────────────────────────────┘

➤──┬── SHORT-LITERAL "literal" ──┬──┬── PLURAL-LITERAL 'literal' ──┬──────────➤
   │                             │  │                              │
   └─────────────────────────────┘  └──────────────────────────────┘

➤──── SOURCE selection TARGET selection ──────────────────────────────────────➤

➤──┬── DUPLICATES ──┬── ALLOWED ──┬──────────────────────────┬──┬──────────────➤
   │                │             │                          │  │
   │                │             └── DISTINGUISHED-BY a-type ─┘  │
   │                │                                            │
   │                └── DISALLOWED ──────────────────────────────┘
   │                                                             │
   └─────────────────────────────────────────────────────────────┘

➤──┬── RECURSION ──┬── ALLOWED ──┬──┬──────────────────────────────────────────➤
   │               │             │  │
   │               └── DISALLOWED ─┘  │
   │                                  │
   └──────────────────────────────────┘

➤──┬── ATTRIBUTES ──┬──────────────────────────────────────────────────────────┬──➤
   │                │  <<<<<<<<<<<<<<<<<<<<<<<<<<<,<<<<<<<<<<<<<<<<<<
```

```
┌──────────────
```

min and *max* are:

```
➤──┬─MANY─┬──────────────────────────────────────────────➤
   └─n1───┘
```

n1 is an integer.

a-type is the name of an ATTRIBUTE-TYPE member.

a-group is the name of an ATTRIBUTE-GROUP member.

ea-relationship is:

```
➤──clause──┬──DISALLOWED──────────────────────────────────┬──➤
           │                                               │
           └─ALLOW type──┬─mem-type──────────┬─┬─DUMMY mem-type─┘
                         ├─mem-type-group────┤ │
                         ├─rel-type──────────┤ │
                         └─rel-group─────────┘ │
```

clause is:

```
➤──┬─SEE──┬──────────────────────────────────────────────➤
   ├─UDRn2┤
   └─UDRS─┘
```

where *n2* is an integer in the range 1 to 9.

mem-type, *mem-type-group*, *rel-type* and *rel-group* are as defined above.

alias is a two-character string.

convention is a string of characters from the standard and extended character set for names and optionally includes the special characters * # _ > < = :.

executive is an EXECUTIVE member name.

ref-string is a string of up to 80 characters.

common-clauses are any of the clauses common to all member types other than the ALIAS and SEE which are used for special purposes in the RELATIONSHIP-TYPE member type.

help is one or more lines of free form text.

Note:

The commas and delimiters shown in the above syntax are required when creating RELATIONSHIP-TYPE members via the command interface.

Refer to *ASG-ControlManager User's Guide* for details of the character set for names.

Refer to *ASG-Manager Products Dictionary/Repository User's Guide* for details of the common clauses.

SEXEC

Refer to "Procedures Language" in the *ASG-Manager Products Quick Reference* for details of the SEXEC member type.

TRANSLATION-RULE

Defines the rules used to translate Manager Products member types into member types for other dictionary/repository systems.

```
>>──TRANSLATION-RULE──────────────────────────────────────────>
>─┬──────────────────────────────────────────────────────────┬>
  └─FOR MANAGER-DICTIONARY member-type─────────────────────────┘
>─┬─────────────────────────────────────────────────────────┬>
  └─MP-AID-NAME mp-aid-name──────────────────────────────────┘
>─┬─────────────────────────────────────────────────────────┬>
  └─MP-AID-NAME mp-aid-name──────────────────────────────────┘
>─┬─────────────────────────────────────────────────────────┬>
  └─common-clauses───────────────────────────────────────────┘
>─┬─────────────────────────────────────────────────────────┬>
  └─VARIABLE Vm──┬──IS clause-1──┬──────────────────────────┬──┘
                 │               └─<<<<<<<<<──────────────────┘
                 │                 ELSE clause-1
                 │                          <<,<<
                 ├─USER-EXIT i PASSING arg──────────────────┤
                 └─translate-clause──────────────────────────┘
                          <<<<<<<<<<<<<<<<<<<<
>──CONTENTS──┬──format-line──┬──────────────────────────────>
             └──comment-line──┘
>─┬─;─┬──────────────────────────────────────────────────────>
  └─.─┘
```

where:

member-type is one of the following or a user-defined member-type based on any of the following: ITEM, GROUP, FILE, MODULE, PROGRAM, SYSTEM, ENTITY, USERVIEW, VIEWSET, IDMS-DATABASE, IDMS-AREA, IDMS-RECORD, IDMS-SET, IDMS-VIEW, IDMS-SUBSCHEMA, IDMS-LOGICAL-RECORD, IDMS-PATH-GROUP.

mp-aid-name is the name of the TRANSLATION-RULE member on the MP-AID if different from the original dictionary member-name. It must be no more than 10 characters long.

common-clauses are any of the clauses available to all member types.

V*m* is the identifier of a variable the value of which is defined in the Variable clause, *m* being an integer in the range 0 to 99.

clause-1 is:

```
➤──┬─Dm──────────────────────────────────────────────────────────────────►
   ├─Um──────┬──┬──<<<<<<<<<<<<<<<<<<<<<<<<<<<<<<<<<<<<<<<<<<<<<<<<<<<<<<<<<
   ├─Sm──────┤  └─IF clause-2──────────────────────┬──────────────────────┤
   ├─'string'─┤                                    └─AND clause-2─────────┘
   └─NULL────┘
```

where:

D*m* represents standard attributes and clauses of member definitions.

U*m* represents user-defined attributes defined using the User-Defined-Syntax facility.

S*m* refers to a positional agrument passed to this TRANSLATION-RULE from VARIABLE Vm translate-clause.

'string' denotes any string of printable characters which may include spaces.

arg is one of D*m*, U*m*, and S*m* which are as defined above.

V*m* is as defined above.

clause-2 is:

```
➤──┬─arg──┬──┬─EQ──┬──┬─Dm──────────────────────────────────────────────►
   └─Vm───┘  ├─NE──┤  ├─Um──────┬──────────────────────────────────────┤
             ├─GT──┤  ├─Sm──────┤
             ├─LT──┤  ├─'string'─┤
             ├─GE──┤  └─NULL────┘
             └─LE──┘
```

where *arg*, V*m*, D*m*, U*m*, S*m*, and *'string'* are as defined above.

i is an integer in the range of 1 to 99.

arg is as defined above.

Note:

The maximum of 15 *args* can follow the PASSING keyword.

translate-clause is:

```
➤──TRANSLATE arg USING mp-tr-rule ──┬──────────────────────────────┬──➤
                                    │                <<,<<         │
                                    └──PASSING arg─────────────────┘
➤──┬──────────────────────────────
```

output-specification is:

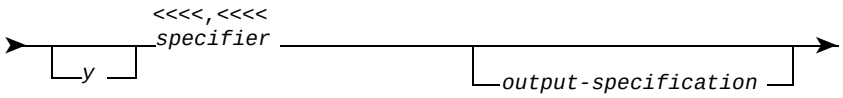

where:

y is an unsigned integer, being a repeat count for the specifier or group of specifiers immediately following.

specifier is:

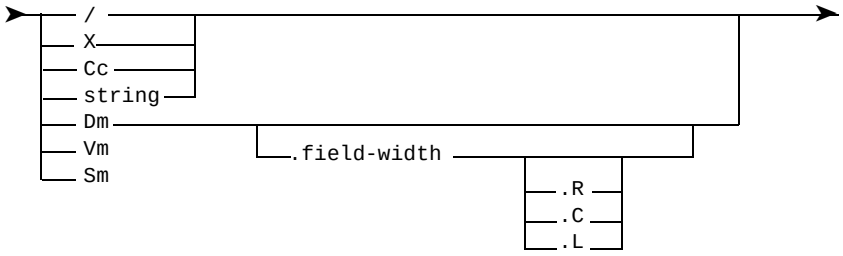

where:

/ denotes the end of a physical output line and causes a carriage return/line feed sequence on the output device.

X denotes a skip of one character position on the output line.

C*c* specifies that the following output is to start a column number *c* where *c* is an unsigned integer.

string, *Dm*, *Um*, *Vm*, and *Sm* are as defined above.

.field-width is an unsigned integer preceded on the same line immediately by a period, specifying the width of the field in which the preceding D*m*, U*m*, V*m*, and S*m* parameter is to be positioned. Parameters are left-justified unless otherwise is specified (see below).

.R specifies that the immediately preceding parameter is to be right-justified within the specified field. If .R is coded, it must appear immediately after the *.field-width* specification.

.C specifies that the immediately preceding parameter is to be centered within the specified field. If .C is coded, it must appear immediately after the *.field-width* specification.

`.L` specifies that the immediately preceding parameter is to be left-justified within the specified field. If `.L` is coded, it must appear immediately after the *`.field-width`* specification.

`comment-line` is a string of printable characters, a space character being considered printable, comprising a line of comment. A comment line must begin with an asterisk (*).

2 Commands

:BROWSE Macro

Displays output in a new Lookaside buffer without deleting the contents of the previous buffer.

```
>>──:BROWSE──────────────────────────────────────────────><
```

:CASE Macro

Specifies that the instructions within a LIFE-CYCLE-OBJECT-TYPE member are only executed to produce a deliverable or to display or interrogate a prerequisite.

```
>>──:BROWSE──┬──PREREQUISITE──┬──────────────────────────><
             ├──DELIVERABLE───┤
             ├──INPUT─────────┤
             ├──OUTPUT────────┤
             └──RESULT────────┘
```

:DCSTANDARD Macro

Lists DOCUMENT members belonging to the current project.

```
>>──:DCSTANDARD──┬──QUALIFY──┬──PROJECT──┬──────────┬──┬──────><
                 │           │           └──string──┘  │
                 │           └──string───┬──────────┬──┤
                 │                       └──PROJECT─┘  │
                 │                                     │
                 └──KEPT 'KEPT IN list-name'───────────┘
```

where:

string is a character string

list-name is the name of a KEPT-DATA list you have created.

:DISPLAY Macro

Prepares output for the next level of processing by displaying it in an Output panel.

```
>>──:DISPLAY──────────────────────────────────────────────><
```

:DO FOR Macro
Superseded by the DO directive. See the *ASG-Manager Products Quick Reference*.

:DO FOREVER Macro
Superseded by the DO directive. See the *ASG-Manager Products Quick Reference.*

:DO WHEN Macro
Superseded by the IF directive. See the *ASG-Manager Products Quick Reference.*

:DO WHILE Macro
Superseded by the DO directive. See the *ASG-Manager Products Quick Reference.*

:ELSE Macro
Superseded by the IF directive. See the *ASG-Manager Products Quick Reference.*

:ENDDO Macro
Superseded by the DO directive. See the *ASG-Manager Products Quick Reference.*

:ENDIF Macro
Superseded by the IF directive. See the *ASG-Manager Products Quick Reference.*

:FMTSCREEN Macro
Calls a panel defined in an FMT-SCREEN member.

```
>>---:FMTSCREEN--------------+-panel----+-----------------+--><
                             +-variable-+   +-NEXT-+
```

where:

panel is the repository name of an FMT-SCREEN member

variable is any local, global, or command variable that must contain the MP-AID name of the FMT-SCREEN member.

:IF Macro
Superseded by the IF directive. See the *ASG-Manager Products Quick Reference.*

:INCLUDE Macro
Includes the contents of the CONTENTS attribute of an existing SEXEC member in the current SEXEC member.

```
>>---:INCLUDE member-name-------------------------------><
```

where *member-name* is the valid repository name of an existing SEXEC.

:LEAVE Macro

Superseded by the LEAVE directive. See the *ASG-Manager Products Quick Reference.*

:LEVEL Macro

Defines a sequence of steps by structuring instructions into separate processing levels.

```
>>--- :LEVEL n ------------------------------------------><
```

where *n* is an integer.

:LINE-COMMAND Macro

Defines the instructions which are executed when the Line Commands H, P, or S are applied to a LIFE-CYCLE-OBJECT-TYPE member.

```
>>--- :LINE-COMMAND character instructions ---------------><
```

where:

character is H, P, or S

instructions are a combination of any of the following:

- Executive Routines (including macros)
- Primary and Line Commands
- Procedure Language directives, functions, and variables.

:LOOP Macro

Superseded by the ITERATE directive. See the *ASG-Manager Products Quick Reference.*

:LPARM Macro

Determines the last two parameters received by an Executive Routine defined in an SEXEC member.

```
>>--- :LPARM ---+------------------------------+---------><
                |  TO variable-1 variable-2    |
```

where:

variable-1 is any local, global, or command variable.

variable-2 is any local, global, or command variable.

:NAMKO Macro

Checks the naming convention of members/relationships or member/relationship types and obtains further information, such as members and member types.

```
>>──:NAMKO ──┬─MT long-name ──────────────────────────────────┬──><
             ├─MT type ──────────────────────┬─name-type──┤
             ├─MTK alias ────────────────────┤
             ├─NAME name ────────────────────┤
             ├─NAMK naming-convention ───────┤
             └─NAMKI naming-convention ──────┘
```

where:

long-name is the value of the LONG-NAME keyword for the member type.

type is the value of one of the following keywords that identify a member/relationship type; ENCODE-KEYWORD, INTERROGATE/KEYWORD, STANDARD- LITERAL, and SHORT-LITERAL.

alias is the alias of a member/relationship type as defined in the ALIAS clause of the MEMBER-TYPE or RELATIONSHIP-TYPE definition.

name is the name of a member or relationship in the repository.

naming-convention is the naming convention for the member type, as defined in the NAMING clause of the MEMBER-TYPE-definition.

name-type is a letter indicating which identifier keyword of the member type is to be tested. Letters are L, E, I, S, or H.

:NAMKOT Macro

Checks if the name of a specified member is in accordance with the naming convention of its specified type.

```
>>──:NAMKO name type ERROR ──┬─GOTO label ──────────────────────────>
                             ├─EXIT ────────────────────────┤
                             ├─CEXEC exec ──────────────────┤
                             └─TRANSFER exec ───────────────┘
```

where:

name is the name of a member of the repository.

type is the keyword of a member type, as defined in the ENCODE-KEYWORDS attribute of the MEMBER-TYPE-definition.

label is up to 50 alphanumeric characters in length and must be preceded by a hyphen.

exec is the name of an SEXEC or EXECUTIVE-ROUTINE member.

:OUTE Macro

Determine the buffer which is to be addressed by an Executive Routine.

```
>>---:OUTE ---+---ON  ---+-----------------------------------><
              +---OFF ---+
```

:RETAIN Macro

Retain an Executive Routine in core memory.

```
>>---:OUTE ---+---YES       ---+-----------------------------------><
              +---CLASS=n    ---+
```

where *n* is one of these:

1 for ToolSet SERVICES routines with high usage
2 for Toolset SERVICES routines with medium usage
3 for naming convention tables
4 for cluster menus
5 for assisted update
6 for LifeCycle SERVICES routines with high usage
7 for LifeCycle SERVICES routines with medium usage
8 other LifeCycle SERVICES components
9 other ToolSet SERVICES components

:STANDARD Macro

Lists all members belonging to the current project that have a specified member type.

```
>>---:STANDARD---+---member-type-list ---+---qualifier---+---><
                 +                       +               +
                 +---KEPT 'KEPT IN list-name'            +
```

member-type-list is a list of any of the member types available in your repository.

qualifier is:

```
>---:QUALIFY ---+---PROJECT---+---string---+---><
                +             +            +
                +---string ---+---PROJECT---+
```

where:

string is a character string.

list-name is the name of a KEPT-DATA list you have created.

:VCHNG Macro

Replaces all or specified occurrences of one character by another for a variable.

```
>>---:VCHNG variable-1 /old/new/ variable-2 --+-mm-+--+-nn-+--><
                                             +-*-+  +-*-+
```

where:

variable-1 is any local, global, or command available.

old is a character string to be changed or deleted.

new is a character string to be inserted. If the old character string is to be deleted, the variable set to the new string must be empty.

mm is the total number of elements that are to be checked for changes or deletions.

nn is the number of occurrences of the string which are to be changed or deleted on each element.

*** denotes all.

:VSEARCH

Locates the position of a string in a variable.

```
>>---:VSEARCH variable-1 /string/ variable-2 ----------><
```

where:

variable-1 is any local, global, or command variable.

string is a character string to be located.

variable-2 is any local, global, or command variable that is set to the element number of an array. This number specifies the position at which the search for the string starts. If the string can be located, variable-2 will be set to the number of the element that contains the string. Otherwise its value will not change.

:XFILE Macro

Files the contents of one or more variables in the source record of a member.

```
>>---:XFILE ---+-ALTER   -+-------+--------+-name <<<<<<<<< variable ---><
               +-MODIFY  -+       |
               +-REPLACE -+       |
               +-INSERT  -+       |
```

where:

name is the name of the member of the repository.

variable is any local, global, or command variable.

ANALYZE

Analyzes the disk space utilization of the repository.

```
>>-+-ANALYZE-+-+-+-status-related-section-+-+-------------------------->
   | ANALYZE  | | |-LOCKED----------------| |
   |          | | |-CHECK-NEEDED----------| |
   |          | | |-CHECK-OK--------------| |

>-+-------------+-+-------------+-+-------------------------------------->
  | selection   | | ALPHABETICALLY |
  |             | |                |

>-+-------------------------------+-------------------------------------->
  | name-related-selection        |

>-+-------------------------------+-------------------------------------->
  | time-and-user-related-selection |

>-+-+-------------------------------+-+-+-;-+-><
  | | GIVING -+-TOTALS----------------+-| | |
  | |         | CONTROLS--------------| | | |
  | |         |-DETAILS-+-------------+-| | |
  | |         |         | OVER n        | | |
  | |         |         |               | | |
```

where *selection* is:

```
>-+-+-KEPT-DATA-+-+-+-<<<< , <<<<-+-+-+-category-+-+-------------------->
  | |           | | |-MEMBERS member-name-+-| |
  | |           | | |                     | | |
```

where:

member-name is the name of a repository member.

category is:

```
➤──┬─SOURCES ──────────────────────────────────────────────────────────➤
   │
   ├─INDEX-NAMES──┬──────────────────────────────────────────────────┤
   │              │                  <<<<<< , <<<<<<
   │              └──EXCEPT index-name-type──┘
   │
   │  <<<<<< , <<<<<<
   ├─index-name-type ──────────────────────────────────────────────────┤
   │
   │         <<<<<< , <<<<<<
   ├─EXCEPT index-name-type ───────────────────────────────────────────┤
   │
   │                 <<<< , <<<<
   ├─┬─DUMMY ──┬──────┬─member-type ──────────────────────────────────┤
   │ │         │      │
   │ └─REAL ───┘      │
   │                  │
   ├─┬─DUMMIES ──┬──────────────────────────────────────────────────┤
   │ │           │                  <<<< , <<<<
   │ └─REAL ─────┘      └──EXCEPT member-type──┘
```

where:

index-name-type is the interrogate keyword for any member type, or one of the keywords, ALIASES, CATALOGS, CATALOGUES, or ATTRIBUTES.

member-type is the interrogate keyword for any member type, or any collective member type, available in your repository.

To list the interrogate keywords available to your repository, enter:

```
SHOW UDS MEMBER-TYPES INTERROGATE KEYWORDS;
```

status-related selections, *name-related-selection* and *time-and-user-related selection* are defined in Appendix A, "Name, Status, Time, and User-Related-Selection," on page 155.

ATA

Reviews the generated assisted update skeleton for a member type in your repository information model (RIM) while working in the Administration repository.

```
➤➤──ATA rim-name alias-code ──┬─;─┬──────────────────────────────➤◄
                              └─.─┘
```

rim-name is the name defined in the MP-AID-NAME clause of the HIERARCHY defining the RIM.

alias-code is defined in the MEMBER-TYPE/RELATIONSHIP-TYPE defining the member type.

AUDIT

Provides audit reports based on information obtained from the repository's log.

```
>>──AUDIT──┬──audit-specification──────────────┬──────────────────────────>
           │                                   │
           │──────────────── TRANSACTION number┘
           └── OF ──┘

>──┬── ONTO ddname ──┘──┬── ARCHIVED ──┘──┬── DICTIONARY name pass ──┘──>
   │                    │                 │

>──┬── ; ──┘──><
   └── . ──┘
```

where *audit-specification* is:

```
>──┬── OF ──┘──┬── UPDATES ──────────────┬──┬── option ──┘──────────────>
   │           ├── ALL-COMMANDS ──┬──────┤  │
   │           ├── ENQUIRIES ────┤      │  │
   │           ├── RC0-UPDATES ──┤      │  │
   │           ├── RC4-UPDATES ──┤      │  │
   │           ├── RC8-UPDATES ──┤      │  │
   │           └── command-name ─┘      │  │
```

where:

command-name is the command type identifier.

option is:

```
>──┬── IN ──────────────────────────────┬── status-name ──┘──────────>
   │          ┌── STATUS ──┘            │
   │          │                         │
   │          │                         │
   │          │                         
```

```
──┬──────────────
```

where *password* is a character string of up to eight characters, being the master password recorded in the dictionary.

BULK ENCODE, BULK PRINT and BULK REPORT Commands

Applies an ENCODE, PRINT, or REPORT command to all members or to selected members of the repository.

```
>>──BULK──┬──┬──────────┬──encode-options──┬──┬──;──┬──────────><
          │  └──CHECK───┘                  │  └──.──┘
          ├──print-options ────────────────┤
          └──report-options ───────────────┘
```

where:

encode-options is:

```
                <<<<<<<<<<<<<<<<<< , <<<<<<<<<<<<<<<<<<
>──ENCODE──┬──status-related-selection──┬──────────────────────────────>
           ├──LOCKED────────────────────┤
           ├──CHECK-OK ─────────────────┤
           └──CHECK-NEEDED ─────────────┘

>──┬──────────┬──┬──────────┬──┬──────────────────┬──────────────────>
   └──selection┘  └──OLD-DATE┘  └──ALPHABETICALLY┘

>──┬──────────────────────────┬──────────────────────────────────────>
   └──name-related-selection ─┘

>──┬──────────────────────────────────────────┬──────────────────────>
   └──time-and-user-related-selection ─────────┘
```

Note:

The keyword OLD-DATE is restricted to the Controller.

where *selection* is:

```
>──┬──────────────────────────────────────────────────────────────>
   └──KEPT-DATA──┬──────────────────────────┬──┘
                 └──IN list-name────────────┘

>──┬──────────────────────────────────────────────────────────────>
   └──MEMBERS member-name <<<< , <<<< ──┘
```

```
➤──┬──────────────
```

```
──┬──────────────────┬──┬──────────────────────┬──
  │ALPHABETICALLY    │  │name-related-selection│
  └──────────────────┘  └──────────────────────┘
──┬──────────────────────────────────────────────┬──
  │time-and-user-related-selection               │
  └──────────────────────────────────────────────┘
```

where:

selection is defined above

status, *name*, *time*, and *user-related-selection* are defined above.

report-options is:

```
──┬──────┬──┬──────────────┬──┬──────────────┬──
  │REPORT│  │HIERARCHY     │  │ALL-STATUSES  │
  └──────┘  └──────────────┘  └──────────────┘
                <<<<<<<<<<<<<,<<<<<<<<<<<<<<<
──┬──────┬──┬──┬──────────────────────┬──┬──────┬──
  │SKIP  │  │  │status-related-selection│  │      │
  │NOSKIP│  │  │LOCKED                  │  │      │
  │NO-SKIP│  │  │CHECK-OK                │  │      │
  └──────┘  │  │CHECK-NEEDED            │  └──────┘
            └──┴────────────────────────┴──
──┬──────────┬──┬──────────────┬──
  │selection │  │ALPHABETICALLY│
  └──────────┘  └──────────────┘
──┬──────────────────────────────┬──
  │name-related-selection        │
  └──────────────────────────────┘
──┬──────────────────────────────────────────┬──
  │time-and-user-related-selection           │
  └──────────────────────────────────────────┘
──┬──────────────────────────────┬──
  │DOWN-TO member-type           │
  └──────────────────────────────┘
```

where:

selection is defined above.

status, *name*, *time* and *user-related-selection* are defined above.

COMPARE USE-TABLE

Compares two UDS tables in order to assess their compatibility.

```
──►►──────COMPARE UDS-TABLE tablea ──┬──TO──┬──tableb──┬──;──┬──►◄
                                     └──WITH┘          └──.──┘
```

tablea is the name of a UDS table that is to be applied to a repository.

tableb is the name of a UDS table that is already applied to that repository.

CONSTRUCT

Creates the following types of MP-AID member by constructing members of the Manager Products Administration repository onto the MP-AID:

- PROFILE
- INFOBANK
- EXECUTIVE
- primary UDS-TABLE
- FORMAT
- TRANSLATION-RULE

```
>>-+-+-PROFILE-----------+-+-variable-a-+-+-;-+-+-><
   | |-EXECUTIVE--------| |             | |-.-| |
   | |-FORMAT-----------| |             | |   | |
   | |-INFOBANK         | |             | |   | |
   | |-TRANSLATION-RULE-| |             | |   | |
   | |   |-TR-RULE------| |             | |   | |
   |-UDS-TABLE FROM hierarchy-----------| |   | |
```

where:

variable-a is:

```
>-+-FROM member-name-+-+-REPLACE-+-+-------------->
  |-ALL--------------------------| |
  |-CHANGES-ONLY-----------------| |
```

member-name is the name of the repository member being used to add or replace a member on the MP-AID.

hierarchy is the name of a HIERARCHY member is a repository (normally in the Manager Products Administration repository.

Note:

The UDS-TABLE keyword is available to repository Controllers.

CONTROL CMS

Initiates or overrides concurrent usage protection for your repository in a CMS environment.

```
>>-CONTROL CMS-+-CMS-USER user-id cuu cuu-+-+-;-+-+-><
               |-CMS-EXCLUSIVE------------| |-.-| |
```

where:

user-id is the CMS user ID which has been allocated mini-disks to hold the dictionary files and dictionary control disks as defined in the implementation procedure.

cuu is a one-digit channel number and a two-digit unit number, being the address of a control disk. The first occurrence is the address of the serialization control disk; the second occurrence is the address of the dictionary utilization control disk.

CONTROL ENQ-NAME

Specifies the minor queue name (that is, the *rname*) for the currently open repository.

```
>>──── CONTROL ENQ-NAME string ──┬─ ; ─┬──────────────────────────────>><
                                 └─ . ─┘
```

where *string* is a string of not more than 44 characters.

CONTROL NEW-ALIASES

Controls the incorporation of a revised alias-type keyword list into repository.

```
>>──────── CONTROL NEW-ALIASES ──────────────────────────────────────>
>──┬──────── ALL-ALIASES all-rules ──────────────────────────────────┬>
  │
  ├──────── GENERAL-ALIASES general-rules ──────────────────────────┤
  │                 <<< , <<<
  ├──────── REMOVE alias-type ──────────────────────────────────────┤
  │                 <<<<<<<<<<<<<<<<<<<<<<  ,  <<<<<<<<<<<<<<<<<<<<<<
  ├──────── REPLACE alias-type ──┬─ <<<<<<<<<<<< ─┬──┬─ specific-rules ─┤
  │                              └─ ELSE synonym ──┘  │
  │                                                   │
  └──────── ADD alias-type ──────┬─ <<<<<<<<<<<< ─┬──┬─ specific-rules ─┘
                                 └─ ELSE synonym ──┘  │
>──┬──────────────────────────────────────────────────┬─ ; ─┬──────────>><
   └─ SHOW-ALIASES ─┬─ QUIT ─┬──────────────────────────┘ . ─┘
                    │        │
```

where:

alias-type is the name of a specific *alias-type*.

synonym is the name of an *alias-type* synonym.

all-rules is:

```
>──┬──────────────────────┬──┬──────────┬──────────────────────────────────>
  │ MAXIMUM-NUMBER x     │  │ ERROR    │
  └──────────────────────┘  │ WARNING  │
                            └──────────┘
>──┬──────────────────────┬──┬──────────┬──────────────────────────────────>
  │ MINIMUM-NUMBER m     │  │ ERROR    │
  └──────────────────────┘  │ WARNING  │
                            └──────────┘
>──┬──────────────────────────────────────────────────────────────────────>
  │ NO-RULES                                                              │
  └──┬──────────────────┬──┘
     │ RULES rules      │
     └──────────────────┘
```

where:

x is an integer in the range 0 to 254.

m is an integer in the range 1 to 254. *m* must be greater than or equal to *x*, if used.

rules is:

```
>──┬──────────────────────┬──┬──────────┬──────────────────────────────────>
  │ MINIMUM-LENGTH n     │  │ ERROR    │
  └──────────────────────┘  │ WARNING  │
                            └──────────┘
>──┬──────────────────────┬──┬──────────┬──────────────────────────────────>
  │ MAXIMUM-LENGTH y     │  │ ERROR    │
  └──────────────────────┘  │ WARNING  │
                            └──────────┘

>──┬──────────────────────────────────────────────────────────────────────>
  │ DUPLICATES ──┬─ MEMBERS ──┬─ ALLOWED ──┬──────────────────────────────│
  │              │             │ ERROR      │                              │
  │              │             │ WARNING    │                              │
  │              ├─ TYPES ─────┬─ ALLOWED ──┬──────────────────────────────│
  │              │             │ ERROR      │                              │
  │              │             │ WARNING    │                              │
  │              └─ ALIASES ───┬─ ALLOWED ──┬──────────────────────────────│
  │                            │ ERROR      │                              │
  │                            │ WARNING    │                              │
  └──────────────────────────────────────────────────────────────────────┘

>──┬──────────────────────────┬──────────────────────────────────────────>
  │ EXIT-EXEC execname       │
  └──────────────────────────┘
```

where:

n is an integer in the range 1 to 79.

y is an integer in the range 1 to 79. *y* must be greater than or equal to *n*, if used.

execnname is the name of a user-defined Executive Routine and may be up to 10 characters in length.

general-rules is:

```
>>-- MAXIMUM-NUMBER x ---+-------------+-------------------------------------->
                         |             |
                         +-- ERROR ----+

>--+-------------------------+---+-------------+-------------------------------->
   |                         |   |             |
   +-- MINIMUM-NUMBER m ----+   +-- ERROR ----+
                                 |             |
                                 +-- WARNING --+

>--+-------------------+-------------------------------------------------------->
   |                   |
   +-- DEFAULT RULES --+
   |                   |
   +-- NO-RULES -------+
   |                   |
   +-- RULES rules ----+
```

specific-rules is:

```
>--+-------------------------------------------------------------------------->
   |
   +-- OPTIONAL --+-- YES --+
                  |         |
                  +-- NO ---+
                  |         |
                  +-- WARNING --+

>--+-------------------+-------------------------------------------------------->
   |                   |
   +-- DEFAULT RULES --+
   |                   |
   +-- NO-RULES -------+
   |                   |
   +-- RULES rules ----+
```

CONTROL RESERVE

Sets the RESERVE control indicator so that only one central processor at a time can access the currently open BDAM repository.

```
>>-- CONTROL RESERVE ---+-------+---+-----+---+-------+-->
                        |       |   |     |   |       |
                        +-- ON --+   +-- ; --+   +-- . --+
                        |       |   |     |   |       |
                        +-- OFF --+   +-- . --+   +-------+
```

CONTROL UDR

Renames user-defined EA relationships.

```
                                  <<<<<<< ,<<<<<<<
>>-- CONTROL UDR RELATIONSHIPS --+-- relationship1 --+
                                 |                   |
                                 +-- relationship2 --+
                                 |                   |
                                 +-- relationship3 --+
                                 |                   |
                                 +-- relationship4 --+
                                 |                   |
                                 +-- relationship5 --+
                                 |                   |
                                 +-- relationship6 --+
                                 |                   |
                                 +-- relationship7 --+
                                 |                   |
                                 +-- relationship8 --+
                                 |                   |
                                 +-- relationship9 --+

>--+-------------------------------------------------+---+-----+---+-------+-->
   |                                                 |   |     |   |       |
   +-- SUB-RELATIONSHIP sub-relationship ------------+   +-- ; --+   +-- . --+
```

where:

relationship 1-9 are the names of the relationships you want to define in the dictionary.

sub-relationship is the sub-relationship which applies to all the UDRs defined in this command. You may define up to nine UDRs in a CONTROL UDR command.

CONTROL UDR REMOVE

Removes the user-defined EA relationships which currently apply in your repository

```
>>──── CONTROL UDR REMOVE ──────────────────────┬─ ; ─┬──────────>><
                                                └─ . ─┘
```

CONTROL UDS

Implements a UDS table in a particular repository.

```
>>──── CONTROL UDS table-name ──┬──────────────────┬──┬─ ; ─┬──────>><
                                └─ UNCONDITIONALLY ─┘  └─ . ─┘
```

where *table-name* is a string of between one and five characters, being the name of a UDS table.

COPY

Inserts as the source record of a new member or replaces the source record of an existing member, a copy of the source record of an existing member in the current status or in another status.

```
>>──── COPY member-name-1 ──────────────────────────────────────────>
>──┬── TO member-name-2 ──┬──────────────────────┬──────────────────>
  │                      └─ FROM status-name ───┘                  │
  └── FROM status-name ──┬──────────────────────┬──────────────────┘
                         └─ TO member-name-2 ───┘
>──┬──────────────────┬──┬──────────┬──┬──────────┬──────────────────>
   └─ ENCODED-SOURCE ─┘  └─ REPLACE ─┘  └─ OLD-DATE ─┘
>──┬─ ; ─┬──────────────────────────────────────────────────────────>><
   └─ . ─┘
```

where:

member-name-1 is the name of the existing dictionary member whose source record is to be copied.

member-name-2 is the name of the new repository member.

status-name is the name of a status.

Note:

The keyword OLD-DAT is only available to the controller.

CREATE

Creates a repository.

```
>>──CREATE repository-name MASTER password──────────────────────>

>──┬─physical spec──────────────────────────────────────────────>
  ├─PHYSICAL-BLOCKSIZE nnnnn──┤
  └─VSAM──────────────────────┘

>──┬─logical spec──────────────────────────────────────────────>
  └─LOGICAL-BLOCKSIZE nnnnn──┤

>──┬──────────────────────────────────────────────────────┬─;─┬──><
  └─status-and-logging-options──┘                          └─.─┘
```

where:

repository-name is a string of up to six printable characters, being the name by which the new repository will be known.

password is a string of up to eight printable characters.

physical-spec is:

```
>──┬─IPB nnnnn──────────────────────────────────────────────────>
  └─INDEX-PHYSICAL-BLOCKSIZE nnnnn──┤

>──┬─SPB nnnnn──────────────────────────────────────────────────>
  └─SOURCE-PHYSICAL-BLOCKSIZE nnnnn──┤

>──┬─DPB nnnnn──────────────────────────────────────────────────>
  └─DATA-PHYSICAL-BLOCKSIZE nnnnn──┤

>──┬─RPB nnnnn──────────────────────────────────────────────────>
  └─RECOVERY-PHYSICAL-BLOCKSIZE nnnnn──┤

>──┬─LPB nnnnn──────────────────────────────────────────────────>
  └─LOG-BLOCKSIZE nnnnn──┤
```

where *nnnnn* is an integer specifying a logical or physical blocksize.

logical-spec is:

```
>──┬─ILB nnnnn──────────────────────────────────────────────────>
  └─INDEX-LOGICAL-BLOCKSIZE nnnnn──┤

>──┬─SLB nnnnn──────────────────────────────────────────────────>
  └─SOURCE-LOGICAL-BLOCKSIZE nnnnn──┤

>──┬─DLB nnnnn──────────────────────────────────────────────────>
  └─DATA-LOGICAL-BLOCKSIZE nnnnn──┤
```

where:

nnnnn is as defined above.

status-and-logging-options is:

```
➤──┬──────────────
```

DIAGNOSE

Checks the consistency of the repository.

```
>>──DIAGNOSE──┬──────────────────────────────────────────────────────────────>
              │──XREF──────────────────────────────────────────────────────────
              │──┬─ALL──────────┬──────────────────────────┬─XPRINT─┬──────────
              │  ├─SMCHAIN──────┤                          │        │
              │  ├─DMCHAIN──────┤                          │        │
              │  ├─SLOST────────┤                          │        │
              │  └─DLOST────────┘                          │        │
              │──┬─IFCHAIN──────┬──────────────────────────┬─SUMMARY─┬──────────
              │  ├─SFCHAIN──┬───┤                          │         │
              │  ├─DFCHAIN──┘   │                          │         │
              │──┬─OMCHAIN──────┬──────────────────────────────────────────────
              │  └─OFFSET───────┘
              │──MEMBER member-name──┬──────────────┬──────────────────────────
              │                      ├─PRINT────────┤
              │                      ├─NO-PRINT─────┤
              │                      └─NOPRINT──────┘
>──┬─;─┬──────────────────────────────────────────────────────────────────────><
   └─.─┘
```

where *member-name* is the name of a repository member.

DICTIONARY

Opens a repository without opening the log dataset.

```
>>──┬─DICTIONARY─┬──repository-name──┬──────────┬──────────────────────────>
    └─DI─────────┘                   ├─READ─────┤
                                     └─UPDATE───┘

>──┬──────────────────────────┬──┬──────────────┬──┬──────────────┬──────────>
   └─SYSNAME file-name────────┘  └─IBUF n1──────┘  └─SBUF n2──────┘

>──┬─DBUF-n3──┬──┬─NOLOG──┬──┬─MONITOR─┬──┬─;─┬──────────────────────────><
   └──────────┘  └────────┘  └─────────┘  └─.─┘
```

where:

repository-name is the name of a repository that has been established by the Controller.

file-name is the logical file name (ddname) used in OS job control statements to indicate the external dataset name (physical file name) of the dictionary's index dataset.

n1, n2, and *n3* are unsigned integers in the range 2 to 32, 000.

DISABLE

Prevents the use of the repository by anyone other than the Controller or the Master Operator.

```
>>──────DISABLE ──┬─;─┬──────────────────────────────────────────><
                  └─.─┘
```

ENABLE

Cancels the effect of a DISABLE command; that is, to make the use of a repository available again to other users.

```
>>──────ENABLE ───┬─;─┬──────────────────────────────────────────><
                  └─.─┘
```

FMTOUT

Checks the layout fields and the valid input combinations of a defined screen before it is filed in the repository and constructed onto the MP-AID.

Note:

The panel must be successfully encoded before the FMTOUT command can be applied to it.

```
>>──────FMTOUT name──┬─;─┬──────────────────────────────────────><
                     └─.─┘
```

JOURNAL

Writes a transaction containing textual information to the log dataset.

```
                  <<< , <<
>>──────JOURNAL 'string' ──┬─;─┬──────────────────────────────────><
                            └─.─┘
```

where *string* is a character string of not more than 255 characters.

LOCK RELEASE

Release a lock on any repository member.

```
>>──────LOCK RELEASE member-name ──┬─;─┬──────────────────────────><
                                   └─.─┘
```

where *member-name* is the name of a repository member.

LOG ALL-COMMANDS and LOG UPDATE-COMMANDS

Initiates logging of all commands or repository updating commands only.

```
>>──────LOG ──┬─ALL-COMMANDS──┬──┬─;─┬──────────────────────────><
              └─UPDATE-COMMANDS─┘  └─.─┘
```

LOG ANALYSIS

Outputs an analysis of the information recorded in a repository's log dataset.

```
>>──────LOG ANALYSIS ──────────────────────────────────────────><
```

```
──┬─ FROM ──┬─────────────┬── number ──┬──────────┬──┬──────────────
```

```
>>---- LOG CREATE DICTIONARY repository-name password ----+---+---+----><
                                                          |   ;   |
                                                          |   .   |
```

where:

repository-name is the name of your repository.

password is either the Master Operator's or the Controller's password as recorded in the repository.

LOG PURGE

Purges unwanted transactions from the log dataset.

```
>>---- LOG PURGE DICTIONARY repository-name password ----+---+---+----><
                                                         |   ;   |
                                                         |   .   |
```

where:

repository-name is the name of your repository.

password is either the Master Operator's or the Controller's password as recorded in the repository.

LOG STATUS

Ascertains the status and utilization of the log dataset, details of the last backup and roll-forward information.

```
>>---- LOG STATUS ----+------------------------------+---+---+----><
                      |                              |   ;   |
                      |                              |   .   |
                      +--DICTIONARY name password----+
```

where:

name is the name of your repository.

password is either the Master Operator's or the Controller's password as recorded in the dictionary.

LOG SWITCH

Flags a currently ACTIVE (primary or secondary) area of a log dataset AWAITING ARCHIVE.

```
>>---- LOG SWITCH ----+---------------------+---+---+----><
                      |                     |   ;   |
                      |                     |   .   |
                      +-- UNCONDITIONAL ----+
```

LOG UPDATE-COMMANDS

See "LOG ALL-COMMANDS and LOG UPDATE-COMMANDS" on page 118.

LOGON

Enables the System Administrator to sign up on to Manager Products.

```
>>──LOGON logon-identifier──── PASSWORD password ──────────────────────>
>──┬──────────────┬──┬──────────────┬──────────────────────────────────>
  └─ NO-PROFILE ─┘  └─ UPDATE-MPAID ─┘
>──┬──────────────┬──┬─ ; ─┬──────────────────────────────────────────><
  └─RECONNECT────┘  └─ . ─┘
```

where:

logon-identifier is a name of no more than 10 characters.

password is a name of no more than 8 characters.

MP-AID ANALYZE

Analyze the condition of either a primary or secondary MP-AID.

```
>>──┬─ MP-AID ─┬──────────────┬─ ANALYZE ─┬──────────────────────────>
   └─ MPAID ──┘              └─ ANALYZE ─┘
>──┬──────────────────────────┬──┬──────────┬──┬─ ; ─┬──────────────><
  └─CONCATENATION mpaid-name─┘  └─ size ───┘  └─ . ─┘
```

where:

mpaid-name is the logical name of a concatenated MP-AID.

size is a proposed logical blocksize.

MP-AID BACKUP-DETAILS

Records that an EXTERNAL (non-Manager Products) backup has been taken.

```
>>──┬─ MP-AID ─┬──── BACKUP-DETAILS ──── string ──┬─ ; ─┬──────────><
   └─ MPAID ──┘                                  └─ . ─┘
```

where *string* is a character string not more than 32 characters in length.

MP-AID BUFFERS

Optimizes MP-AID processing speed, by manipulating the size of the buffer pool.

```
>>──┬─ MP-AID ─┬──── BUFFERS ──────────────────────────────────────────>
   └─ MPAID ──┘
>──┬──────────────────────────────────────────────────────────────────>
  ├─CONCATENATION mpaid-name──────────────────────────────────────────┤
  └─buffers──┬──────────┬──┬──────────────────────────────────────────┤
             └─MONITOR──┘  ├─CONCATENTATION mp-aid-name──────────────┤
                           └─ALL-CONCATENATIONS──────────────────────┘
```

```
➤──┬─ ; ─┬──────────────────────────────────────────────────────────────────➤◄
   └─ . ─┘
```

where:

mpaid-name is a logical name of the secondary MP-AID.

buffers is the new number of buffers to be allocated.

MP-AID CONCATENATION

Gives read-only access to other MP-AIDs.

```
➤➤──┬─ MP-AID ─┬── CONCATENATION ──┬──────────────────────────┬──┬─ ; ─┬──➤
    └─ MPAID ──┘                   │ <<<<  , <<<              │  └─ . ─┘
                                   ├─ mpaid-name ─────────────┤
                                   ├─ LIST ───────────────────┤
                                   └─ OFF ────────────────────┘
```

where *mpaid-name* is the logical name of an MP-AID to be concatenated.

MP-AID CONTROL CMS

Initiates or terminates concurrent access protection for a shared MP-AID in a CMS environment.

```
➤➤──┬─ MP-AID ─┬── CONTROL ──┬─ CMS-USER user-id cuu ──────────┬──➤
    └─ MPAID ──┘              └─ CMS-EXCLUSIVE ─────────────────┘
➤──┬─ ; ─┬──────────────────────────────────────────────────────────────────➤◄
   └─ . ─┘
```

where:

user-id is the CMS user ID which has been allocated a mini-disk to hold the MP-AID and a mini-disk to act as a control disk.

cuu is the address of the control disk consisting of a one-digit channel number and a two-digit unit number.

MP-AID CONTROL RESERVE

Initiates or terminates protection in an OS environment against concurrent updating when two or more central processors have access to the same BDAM MP-AID or shared DASD.

```
➤➤──── MP-AID CONTROL RESERVE ──┬─ ON ──┬──┬─ ; ─┬──────────────────────➤◄
                                └─ OFF ─┘  └─ . ─┘
```

MP-AID CREATE

Creates an MP-AID.

```
➤➤──┬─ MP-AID ─┬── CREATE ──── ADMINISTRATION identifier ──────────➤
    └─ MPAID ──┘
```

```
>>-----PASSWORD password-----+-LOGICAL-BLOCKSIZE-+-----------n-----><
                            +-PHYSICAL-BLOCKSIZE-+
>-----+-;-+-----------------------------------------------------------><
      +-.-+
```

where:

identifier is a name of no more than 10 characters.

password is a name of no more than 8 characters.

n is an integer specifying a logical or physical blocksize. There is no default supplied for either value.

MP-AID DELETE

Removes any MP-AID members, including those created by other users.

```
>>-----+-MP-AID-----+-DELETE-+------------------------------------------>
       +-MPAID------+-PURGE--+
                    +-REMOVE-+
>-----+-PROFILE-----------------------+-mpaid-member-name-----------+-->
      +-EXECUTIVE-------------------+                               |
      +-INFOBANK--------------------+                               |
      +-FORMAT----------------------+                               |
      +-+-TRANSLATION-RULE----------+                               |
        +-TR-RULE-------------------+                               |
      +-+-UDS-TABLE-----------------+                               |
        +-UDST----------------------+                               |
      +-+-VARIABLE-POOL-------------+                               |
        +-VBPL----------------------+                               |
      +-+-UDS-COMPARISON-TABLE-+-udst-1 udst-2-----------------------+
        +-UDSC-----------------+                                    |
      +-USER-MEMBER-+-mpaid-name-+-------------------------------------+
      +-TRANSIENT---+            +-logon-id-+                         |
      +-KEPT-DATA---+                       |                         |
      +-WORKBENCH---+                       |                         |
      +-WBCH--------+                       |                         |
      +-WBDA--------+                       |                         |
>-----+-;-+-----------------------------------------------------------><
      +-.-+
```

where:

mpaid-name is the name of an MP-AID member.

udst-1 and *udst-2* are names of UDS Tables, each of which is either an ASG-supplied module or is connected in a primary UDS-TABLE member of the MP-AID.

logon-id is the Logon Identifier of the user who added the MP-AID member.

MP-AID DIAGNOSE

Checks the consistency of the MP-AID, and repairs any MP-AID inconsistencies.

```
>>──┬─MP-AID──────DIAGNOSE──┬──────────────────────────────────────────>
    └─MPAID                 ├─ REPAIR ──────────────────────────────┤
                            └─ CONCATENATION mpaid-name ────────────┘

>──┬─ ; ─┬──────────────────────────────────────────────────────────><
   └─ . ─┘
```

where *mpaid-name* is the logical name of a secondary concatenated MP-AID.

MP-AID DISABLE

Prevents anyone other than the System Administrator from using the system during periods in which maintenance or housekeeping tasks must be performed.

```
>>──┬─MP-AID─┬──────DISABLE string──────┬─ ; ─┬──────────────────><
    └─MPAID──┘                          └─ . ─┘
```

where *string* is a character string no more than 72 characters in length.

MP-ENABLE

Cancels the effects of a previously executed MP-AID DISABLE command.

```
>>──┬─MP-AID─┬──────ENABLE──────────────┬─ ; ─┬──────────────────><
    └─MPAID──┘                          └─ . ─┘
```

MP-AID EXEC-LIST

Performs a given operation on several MP-AID members at the same time.

```
>>──┬─MP-AID─┬──────EXEC-LIST──┬──────────────────────────────────><
    └─MPAID──┘                 └─ CONCATENATION mpaid-name ──────┘

>──┬──────────────┬──────────────┬──────────────┬──────────────────>
   └─DATE-ORDER───┘  └─member-type─┘  └─selection──┘

>──┬─ ; ─┬──────────────────────────────────────────────────────────><
   └─ . ─┘
```

where:

mpaid-name is the logical name of a secondary MP-AID.

member-type is:

```
>>-+-ALL-+-+-USER-MEMBERS-------------+-+-------------------------------->
   |     | |-PUBLIC-USER-MEMBERS-----| |
   |     | |-TRANSIENTS--------------| |
   |     | |-KEPT-DATA-LISTS---------| |
   |     | |-WORKBENCHES-------------| |
   |     | |-WBCH--------------------| |
   |     | |-WBDA--------------------| |
   |     |
   |-+-USER-MEMBERS------------+-+-logon-identifier-+-----------------------
   | |-PUBLIC-USER-MEMBERS-----| |                  |
   | |-TRANSIENTS--------------| |                  |
   | |-KEPT-DATA-LISTS---------| |                  |
   | |-WORKBENCHES-------------| |                  |
   | |-WBCH--------------------| |                  |
   | |-WBDA--------------------| |                  |
   |
   |-+-EXECUTIVES--------------+-----------------------------------------
     |-COMMAND-------------------|
     |-CMND----------------------|
     |-PROFILES------------------|
     |-INFOBANK------------------|
     |-FORMATS-------------------|
     |-TRANSLATION-RULES---------|
     |-TR-RULES------------------|
     |-TRUL----------------------|
     |-UDS-TABLES----------------|
     |-UDST----------------------|
     |-UDS-COMPARISON-TABLES-----|
     |-UDSC----------------------|
     |-VARIABLE-POOLS------------|
     |-VBPL----------------------|
```

where *logon-identifier* is the logon ID of a specific user.

selection is:

```
>-+-+-FROM string-1-+-+-TO string-2-+-+-------------------------------->
  | |                | |           | |
  | |                | |           | |
  | |-ONLY string----------------------|
```

where *string-1*, *string-2*, and *string* represent the range of the MP-AID members to be selected, and can be from 1 to 10 characters.

MP-AID FLAG

Allows entry of a change-reference string for a specified InfoBank panel.

```
>>-+-MP-AID-+-FLAG mpaid-panel-name string-+-+-;-+-><
   |-MPAID-|                               |-.-|
```

where:

mpaid-panel-name is the name of an MPAID INFOBANK member.

string is a sting of no more than 32 characters in length.

MP-AID LIST

List members held on a primary or secondary MP-AID.

```
>>──┬─MP-AID─┬──── LIST ──┬──────────────────────────────────────────────┬──>><
    └─MPAID──┘            ├─ CONCATENATION mpaid-name ─┬─────────────────┤
                          └─ ALL-CONCATENATIONS ────────┘

>──┬──────────────┬──────────────┬──────────────┬──────────────────────────>
   └─DATE-ORDER───┘  └─member-type─┘  └─selection─┘

>──┬─ ; ─┬──────────────────────────────────────────────────────────────>><
   └─ . ─┘
```

where:

mpaid-name is the logical name of a secondary MP-AID.

member-type is:

```
>>──┬──────── ALL ────────┬─ USER-MEMBERS ──────────┬──────────────────────>
    │                     ├─ PUBLIC-USER-MEMBERS ───┤
    │                     ├─ TRANSIENTS ────────────┤
    │                     ├─ KEPT-DATA-LISTS ───────┤
    │                     ├─ WORKBENCHES ───────────┤
    │                     ├─ WBCH ──────────────────┤
    │                     └─ WBDA ──────────────────┘
    │
    │   ┌─ USER-MEMBERS ──────────┐   ┌─ logon-identifier ─┐
    ├───┤─ PUBLIC-USER-MEMBERS ───┤───┤                    │
    │   ├─ TRANSIENTS ────────────┤   └────────────────────┘
    │   ├─ KEPT-DATA-LISTS ───────┤
    │   ├─ WORKBENCHES ───────────┤
    │   ├─ WBCH ──────────────────┤
    │   └─ WBDA ──────────────────┘
    │
    │   ┌─ EXECUTIVES ────────────┐
    ├───┤─ COMMAND ───────────────┤
    │   ├─ CMND ──────────────────┤
    │   ├─ PROFILES ──────────────┤
    │   ├─ INFOBANK ──────────────┤
    │   ├─ FORMATS ───────────────┤
    │   ├─ TRANSLATION-RULES ─────┤
    │   ├─ TR-RULES ──────────────┤
    │   ├─ TRUL ──────────────────┤
    │   ├─ UDS-TABLES ────────────┤
    │   ├─ UDST ──────────────────┤
    │   ├─ UDS-COMPARISON-TABLES ─┤
    │   ├─ UDSC ──────────────────┤
    │   ├─ VARIABLE-POOLS ────────┤
    │   └─ VBPL ──────────────────┘
```

where *logon-identifier* is the logon identifier of a specific user.

selection is:

```
>──┬──────────────
```

```
➤──┬─ANALYSIS-ONLY ──┬──┬──PURGE──┬──┬──PRINT────┬──┬──;──┬──➤◄
   │                 │  │──ADD────│  │──NO-PRINT─│  │──.──│
   │                 │  └──REPLACE┘  └──NOPRINT──┘  └─────┘
```

where *member-type1* is:

```
➤──┬──┬──COMMANDS──┬──────────────
```

MP-AID PASSWORD

Changes the Systems Administrator's password.

```
>>──┬─MP-AID──┬──PASSWORD old-password new-password──┬─;─┬──><
    └─MPAID───┘                                      └─.─┘
```

where *old-password* is the password used to log on to the current session and *new-password* is the password to be used in subsequent sessions. The password can be maximum of eight characters in length.

MP-AID PRINT

Displays the contents of MP-AID members.

```
>>──┬─MP-AID──┬──PRINT──┬──────────────────────────────┬──────────────────><
    └─MPAID───┘         ├─CONCATENATION mpaid-name─────┤
                        └─ALL-CONCATENATIONS────────────┘

>──┬─USER-MEMBER──────┬──member──┬──────────┬──┬──────────────────┬─;─┬──><
   ├─KEPT-DATA-LIST───┤          └─logon-id──┘  │                  └─.─┘
   └─TRANSIENT────────┘                         │
                                                │
   └──┬─EXECUTIVE─┬──member──────────────────────┘
      └─PROFILE───┘
```

where:

mpaid-name is the logical name of a secondary MP-AID.

member is the name of the MP-AID member to be printed.

logon-id is the logon identifier of the user owning the member to be printed.

MP-AID RELOAD

Inputs a physical copy of an MP-AID from a dataset that was written by an UNLOAD command. This is the syntax of the MP-AID RELOAD command for a BDAM or VSAM-organized MPA-AID.

```
>>──┬─MP-AID──┬──RELOAD PASSWORD password──────────────────────────>
    └─MPAID───┘

>>──┬──────────────────────────────────────────────────────┬─;─┬──><
    └─PHYSICAL-BLOCKSIZE nnnnn─────────────────────────────┘   └─.─┘
```

where:

password conforms to the rules governing delimited and undelimited names.

nnnnn is an integer specifying physical blocksize.

MP-AID RESET

Removes a flag, counter or record preventing certain MP-AID members fulfilling their functions and/or being deleted from the MP-AID.

```
>>──┬─MP-AID─┬──── RESET ──────────────────────────────────────>
    └─MPAID──┘

>──┬─ ALL ──┬─PROFILES──┬──────────────────────────────────────>
   │        │─INFOBANK──│
   │        └─USER-MEMBERS─┘
   │
   │──┬─PROFILE──┬──────────────mp-aid-member-name──────────────
   │  └─INFOBANK─┘
   │
   │──USER-MEMBER mp-aid-member-name ──┬──────────────────────
   │                                   └──logon-id──┘
   │
   └──UDS-TABLE──┬──────uds-table-member-name repository-name ──┘
     └─UDST──────┘

>──┬─ ; ─┬──────────────────────────────────────────────────>><
    └─ . ─┘
```

where:

mpaid-member-name is the name of an MP-AID member.

logon-id is the Logon Identifier you have assigned to one or more users.

uds-table-member-name is the name of a secondary UDS-TABLE member of the MP-AID and the name of a UDS Table which either is an ASG-supplied module or is contained in a primary UDS-TABLE member of the MP-AID.

repository-name is the name of the repository to which the UDS Table is assigned.

MP-AID STATUS

Determines the current status of a primary or secondary MP-AID.

```
>>──┬─MP-AID─┬──STATUS──┬──────────────────────────────────────><
    └─MPAID──┘          └─CONCATENATION mpaid-name──┘

>──┬─ ; ─┬──────────────────────────────────────────────────><
    └─ . ─┘
```

where *mpaid-name* is the logical name of a secondary MP-AID.

MP-AID UNLOAD

Copies the contents of a primary or secondary MP-AID to an output dataset.

```
>>──┬─MP-AID──┬──UNLOAD──┬──────────────────────────────────────────>
    └─MPAID───┘          └─CONCATENATION mpaid-name─┘

>──┬──────────────────────────────────────────────────────────────────────────┬──>
  │  <<<
```

MVW-GEN

Generates a Host Dictionary Schema (HDS) Table and an associated Translation Executive Routine (Translation EXEC).

```
>>---MP-AID ---+-------------------------------+---------------------------->
               |  +-HDS-TABLE-----------------+|
               |  +-TRANSLATION-EXEC----------+|
               |  +-INSTALL-------------------+|
>---+-------------------------------+-+-------------------------------------->
    |  +-WITH-RELATIONSHIPS-------+ | |  +-USING udr-name-+
    |  +-WR-----------------------+ | |  |                |
>>---+-ALL-MEMBERS-TYPES------------------------------------------------------>
    |-ONLY user-name
    +-EXCLUDING user-name
>---uds-table---+-------------------------+-------------+-;-+------------------>
                +-hds-name-+-------------+-+           +-.-+
                           +-tr-name-----+-+
```

where:

udr-name is the name of a user defined relationship.

user-name is the name of a USER MEMBER stored on the MP-AID.

uds-table is the name of an existing USER DEFINED SYNTAX TABLE on the MP-AID.

hds-name is the name to be given to the public USER MEMBER which will be the generated HDS TABLE stored on the MP-AID.

tr-name is the name to be given to the Translation EXEC which corresponds to the USER DEFINED SYNTAX TABLE and ManagerView HDS TABLE.

MZAP

Applies fixes to COMMAND members in dataset MP.COM.UNLOAD.

```
>>---MZAP---+-SELECT member-name-----------------------------+-;-+-->><
            |-VERIFY line-number 'verify-string'-----------+   +-.-+
            |-REPLACE line-number 'replace-string'---------+
            |-APPLY----------------------------------------+
            |-CANCEL---------------------------------------+
            |-MODIFICATION-LEVEL member-name---------------+
            +-RECOVER member-name------------------------+
```

member-name is the name of an MP-AID COMMAND member.

line-number is the line number in the virtual storage copy of the COMMAND member.

verify-string is the specified string to be matched against the contents of the line in the virtual storage copy of the COMMAND member.

replace-string is the string which replaces the contents of the previously identified line in the COMMAND member.

OWNER

Adds or deletes owner names from the repository and lists owner names held in the repository.

```
>>--- OWNER ---+-------------------------------+---+-------+---+---;---+---><
                |  <<<<          <<<            |   |       |   |   .   |
                |--ADD owner-name----------------|   |--LIST-|   |       |
                |                                |                       |
                |  <<<<          <<<            |                       |
                |--DELETE owner-name-------------|                       |
                |                                |                       |
                |--LIST----------------------------|                     |
```

where *owner-name* is up to 32 printable characters.

PX

Generates profile variables in a MethodManager environment.

```
>>--- PX ALL ---------------------------------------------;---><
                                                         .
```

RELOAD

Inputs a physical copy of a repository from a dataset that was written by an UNLOAD command.

```
>---RELOAD repository-name password ---------------------------------><

>---+-------------------------------------------------------------+---------->
    |                          LOG                                |
    |  +-------+  +-----------------------------------------------+
    |  |  AND  |  |                                               |
    |  +-------+  |  +-----------+-----------+                    |
    |             |  |  UPDATES  |           |                    |
    |             |  |  ALL-COMMANDS         |                    |
    |             |  +-----------+-----------+                    |
    |             |                                               |
    |             |--ROLL-FORWARD-----------------------------------|
    |             |                 |                             |
    |             |                 |--transaction-clause---------|
    |             |                 |                             |
    |             |--NO-ROLL-FORWARD--------------------------------|
    |             |                                               |
    +-------------+-----------------------------------------------+

>---+---;---+---><
    |   .   |
```

where:

repository-name is the name of the repository from which the input file was unloaded.

password is the master password or the Master Operator's password as recorded for *repository-name*.

transaction-clause is:

```
>>---------- TO ---------------------- number ----------------------------><
             |                      |
             |_____TRANSACTION______|
```

where *number* is an unsigned integer of up to six digits, being a transaction number in repository-name's log dataset.

REMOVE

Removes a member from a repository under the authority of the Controller's master password, even if reference is made to it by other members.

```
>>-----REMOVE <<<< member-name <<<< ------------------------------------><
                                |  ;  |
                                |_____|
                                |  .  |
```

where *member-name* is the name of a repository member.

RESTORE

Restores a repository, or part of a repository, using a back-up dataset created by a SAVE command.

```
>>----------RESTORE ------------------------------------------------ ; ----><
             |  ALL  |   |  NOPRINT  |                              |  ;  |
             |_______|   |___________|                              |_____|
             |selection|  |  NO-PRINT |                              |  .  |
```

where *selection* is:

```
>-------------------------------------------------------------------------->
          |_ SECURITY _|     |__ STATUS __|     |_ALIAS_|

>-------------------------------------------------------------------------->
      |_ SOURCE ------------------ options _|
      |_MEMBERS <<<< member-name <<<< _|
```

where:

options is:

```
>-------------------------------------------------------------------------->
      |_ FROM-STATUS status-name _|          |_REPLACE_|
```

status-name is a status in the input dataset.

member-name is the name of a repository member.

ROLL-FORWARD

Completes the recovery of a repository by applying updating transactions from its log, after the repository has been reconstituted by non-Manager Products software (instead of by a RELOAD command) or if an interruption has occurred during the roll-forward phase of a RELOAD command.

```
>>──── ROLL-FORWARD repository-name password ──────────────────────>
>──── TO ──┬──────────────────┬── number ──────────────────┬─ ; ─┬──>><
           └── TRANSACTION ───┘                            └─ . ─┘
```

where:

repository-name is the name of your repository.

password is either the Master Operator's password or the master password as recorded in the repository.

number is the number of a transaction recorded in the repository's log.

SAVE

Outputs a partially reorganized copy of a repository, or of the whole or selected parts of the source dataset of a repository, to magnetic tape or disk, for subsequent input by a RESTORE command.

```
>>──── SAVE ──┬──────────┬──┬──────────┬──┬─ ; ─┬──>><
             ├─ ALL ────┤  ├─ NOPRINT ─┤  └─ . ─┘
             └─ option ─┘  └─ NO-PRINT ─┘
```

where *option* is:

```
>──┬──────────────────────────┬──┬──────────────┬──>
   ├─ status-related-selection ─┤  └── selection ─┘
   ├─ CHECK-OK ─────────────────┤
   ├─ CHECK-NEEDED ─────────────┤
   └─ LOCKED ───────────────────┘

>──┬──────────────────┬──┬──────────────────────────┬──>
   └── ALPHABETICALLY ─┘  └── name-related-selection ─┘

>──┬──────────────────────────┬──>
   └── time-related-selection ─┘
```

where *selection* is:

```
>──┬──────────────
```

SECURITY

Establishes security levels which must be satisfied before any updating commands are accepted from a user and inserts, deletes, or list user names with associated security information in the repository.

```
>>──────── SECURITY ──────────────────────────────────────────────────>
>──┬─ INSERT insert-level ─┬──────┬─ PROTECT protect-level ─┬──────────>
  │                       │      │                         │
>──┬─ RETENTION-PERIOD integer ──────────┬─ HOURS ─┬──────────────────>
  │                                     └─ DAYS ──┘
>──┬─ <<<<<<<<<<<<<<<<<<<<<<<<<<<<<<<<<<<<<<<<<<<<<<<<<<<<<<<<<<<<<<<<<<<<
  │  IDENTITY user-name ──┬─ level ─┬──────── password ──┬─ variable-a ─┬
  │                       │         │                    │              │
>──┬─ LIST ──┬──────────────────────────────────────────┬──────────────┬──>
  │         │                                          │              │
  │         │          <<<   ,   <<<                   │              │
  │         ├─ FOR user-hame ─┬──────────────────────┤              │
  │         ├─ ACTIVE ────────┤                      │              │
  │         ├─ DELETED ───────┤                      │              │
  │         └─ GIVING LOCKS ──┘                      │              │
  │                                                  │              │
  │                                                  │              │
  │                                                  
```

where:

integer is as defined above.

owner-name is a string of up to 32 printable characters.

specific-level is an integer in the range 0 to 254.

Note:

In order for the SECURITY command to be accepted, the command identifier must be followed by at least one of the options specified above.

SET ABEND-MESSAGE

Forces Manager Products to abend whatever a particular Manager Products message is generated. This command should only be used under instructions from ASG.

```
>>--- SET ABEND-MESSAGE variable ------------------------------- ; ---><
                                                                  .
```

where *variable* is a valid Manager Products message number.

SET AMBIGUITY-ASSUMPTION

Causes Manager Products software to assume that a particular command was in tended wen a command identifier has been truncated beyond the allowable limit.

```
>>--- SET AMBIGUITY-ASSUMPTION --- ON  --- ------------------- ; ---><
                                   OFF                         .
```

SET BUFFER-LIMIT

Makes available a specified number of buffers.

```
>>--- SET BUFFER-LIMIT n ------------------------------------- ; ---><
                                                               .
```

where *n* is a positive integer in the range of 1 to 9999999.

SET CHARACTER-TRANSLATION

Modifies Manager Products Input and Output Translation Tables.

```
>>--- SET CHARACTER-TRANSLATION --- INPUT  --- ------------- c1 c2 c3 --->
                                   OUTPUT

>--- ; ------------------------------------------------------------------><
      .
```

where:

when the INPUT keyword is used:

c1 is the hexadecimal representation of the keyboard character to be changed to a new character.

c2 is the hexadecimal representation of the new character to be substituted.

c3 is the hexadecimal representation of the upper case of the new character.

when the OUTPUT keyword is used:

c1 is the hexadecimal representation of the internal character to be changed to a new character.

c2 is the hexadecimal representation of new character to be output to the screen (instead of the character represented by *c1*).

c3 is the hexadecimal representation of the character to be output to the printer (instead of the character represented by *c1*).

SET CORPORATE-EXECUTIVE-INDEX

Specifies the size of the in-core index for Corporate Executive Routines.

```
>>--- SET ------------+-- CORPORTE-EXECUTIVE-INDEX --+-- nn ----------+-- ; --+--><
                       +-- CEI ----------------------+                +-- . --+
```

where *nn* represents the required index size in k bytes.

SET DATASET-REUSE

Controls the re-creation or reload of dictionaries/repositories and the MP-AID in an OS environment.

```
>>--- SET DATASET-REUSE ----------+-- ON --+-------------+-- ; --+--><
                                  +-- OFF -+             +-- . --+
```

SET DBCS-STRING-DELIMITER

Sets the double byte character set string delimiter to a particular character.

```
>>--- SET DBCS-STRING-DELIMITER character ----------+-- ; --+--><
                                                    +-- . --+
```

where *character* is the required string delimiter character.

SET DICTIONARY-UPDATES

Controls individual and/or groups of users update/read-only access to Manager Products repositories.

```
>>--- SET DICTIONARY-UPDATES ---+-- ON --+---------------+-- ; --+--><
                                 +-- OFF -+               +-- . --+
```

SET DISABLED-MPAID-CHECK

Prevents the overhead incurred by checking if the MP-AID has been disabled since the executive of a previous command.

```
>>--- SET DISABLED-MPAID-CHECK ---+-- ON --+---------------+-- ; --+--><
                                  +-- OFF -+               +-- . --+
```

SET EXCP-LIMIT

Sets an upper limit for the number of disk I/O operations permitted in processing any command other than UNLOAD, STATUS, CREATE, RESTORE, and SAVE.

```
>>--- SET EXCP-LIMIT ---+-- n   --+---------------+-- ; --+--><
                        +-- OFF --+               +-- . --+
```

where *n* is a positive integer.

SET ENCODE-EXIT

Enables additional checking of dictionary members' sources whenever the encode process takes place, by calling the executive routine MPCMENCUX. This executive routine is user-tailorable and permits DACCESS of newly-encoded members. Other dictionary interrogations can also be performed, but not dictionary updates.

```
>>--- SET ENCODE-EXIT ---+-- ON --+---------------+-- ; --+--><
                         +-- OFF -+               +-- . --+
```

SET FREE-POOL

Increases or reduces the maximum amount of virtual storage to be reserved in the freepool.

```
>>--- SET ---+-- FREE-POOL --+---+-- n   --+---------+-- ; --+--><
            +-- FREEPOOL ----+   +-- OFF --+         +-- . --+
```

where *n* is the maximum number of K (binary thousand) bytes to be reserved.

SET HELP-ENTRY-PANEL

Specifies an InfoBank Panel to be displayed in the current run as an alternative Help Entry Panel in response to the HELP command.

```
>>──── SET HELP-ENTRY panel-name ──────────────────────────────┬─ ; ─┬──><
                                                               └─ . ─┘
```

where *panel-name* is the name of an INFOBANK member on the MPAID.

SET INDEX-PANEL

Names an alternative InfoBank Panel as the Index Panel for the current run.

```
>>──── SET INDEX-PANEL panel-name ──────────────────────────────┬─ ; ─┬──><
                                                               └─ . ─┘
```

where *panel-name* is the name of an INFOBANK member on the MPAID.

SET INFOBANK-ENTRY

Provides an alternative Entry Panel in response to a subsequent INFOBANK command in the current Manager products session.

```
>>──── SET INFOBANK-ENTRY panel-name ──────────────────────────┬─ ; ─┬──><
                                                               └─ . ─┘
```

where *panel-name* is the name of an INFOBANK member on the MPAID.

SET INFOBANK-PANEL-INDEX

Specifies the size of the in-core index for InfoBank panels.

```
>>──── SET ──┬─ INFOBANK-PANEL-INDEX ─┬── nn ──────────────────┬─ ; ─┬──><
             └─ IPI ──────────────────┘                        └─ . ─┘
```

where *nn* represents the required index size in K bytes.

SET INTERROGATE-ENQUE

Provides concurrent access protection for Manger Products repositories.

```
>>──── SET INTERROGATE-ENQUE ──┬─ OFF ─┬──────────────────────┬─ ; ─┬──><
                               └─ ON ──┘                      └─ . ─┘
```

SET IO-FLUSH-LIMIT

Specifies the number of I/O flushes that can be performed during the processing of an interrogation command.

```
>>──── SET INTERROGATE-ENQUE ──┬─ n ───┬──────────────────────┬─ ; ─┬──><
                               └─ OFF ─┘                      └─ . ─┘
```

where *n* is a positive integer.

SET IPI

See "SET INFOBANK-PANEL-INDEX" on page 141.

SET KANJI-MODE

Defines the Kanji Mode during the current session or (when it is placed in Executive Routines or in Logon, Global, or User Defined Profiles) as a default.

```
>>── SET KANJI-MODE ─┬─ IBM ──────┬──────────────────────────┬─ ; ─┬──><
                     ├─ HITACHI ──┤                          └─ . ─┘
                     ├─ FUSITSU ──┤
                     └─ OFF ──────┘
```

SET KANJI-STRING-DELIMITER

Establishes a Kanji String Delimiter for use when interrogating the repository for sub-strings within Kanji character strings.

```
>>── SET KANJI-STRING-DELIMITER character ──────────────────────┬─ ; ─┬──><
                                                                └─ . ─┘
```

where *character* is any character acceptable as a Manager Products string delimiter, except for the ' and " characters.

SET LINE-COMMAND

Renames any Line Command.

```
>>──SET ─┬─LINE-COMMAND──────┬──────────────────────────────────────>
         └─PREFIX-COMMAND────┘
>>── msp-line-command TO new-line-command ──────────────────────┬─ ; ─┬──><
                                                                └─ . ─┘
```

where:

msp-line-command is an ASG-supplied Line Command name.

new-line-command is any single printable character (except a blank space, a terminator, or a name in current use for another Line Command).

SET MESSAGE-LANGUAGE

Specifies the language in which Manager Products are output.

```
>>── SET MESSAGE-LANGUAGE ─┬─ ENGLISH ──┬──────────────────────────┬─ ; ─┬──><
                           ├─ GERMAN ───┤                          └─ . ─┘
                           └─ SPANISH ──┘
```

SET MP-AID-UPDATES

Controls individual and/or groups of users update/read-only access to the MP-AID.

```
>>── SET MP-AID-UPDATES ─┬─ ON ──┬──────────────────────────┬─ ; ─┬──><
                         └─ OFF ─┘                          └─ . ─┘
```

SET OUTPUT-LINE-LIMIT

Specifies an output line limit for the current run.

```
>>── SET OUTPUT-LINE-LIMIT n ──────────────────────────┬─ ; ─┬──><
                                                        └─ . ─┘
```

where *n* is a positive integer in the range 1 to 65000.

SET PREFIX-COMMAND

See "SET LINE-COMMAND" on page 142.

SET PRIMARY-COMMAND

Disables any Primary Command name except LOGOFF, QUIT, and XQUIT.

```
>>── SET PRIMARY-COMMAND msp-command-name ──────────────────────────>
>>─┬─ ON ──────────────────────┬──────────────────────────┬─ ; ─┬──><
   ├─ OFF ─────────────────────┤                          └─ . ─┘
   ├─ TO new-command-name ─────┤
   └─ AS executive-command ────┘
```

where:

msp-command-name is the name of an ASG-supplied command.

new-command-name is an undelimited string of no more than twenty characters. The first character name must be alphabetic; any remaining characters must be letters of the alphabet, numerals from 0 to 9, and/or hyphens.

executive-command is the name of an Executive Routine.

SET RESERVED-INFOBANK-LINE

Specifies an alternative string for subsequent display in the Reserved InfoBank Line whenever a panel displays during the current run.

```
>>── SET ──RESERVED-INFOBANK-LINE ──┬──────────────────┬─ ; ─┬──><
                                    └─── string ───────┘     └─ . ─┘
```

where *string* is an undelimited string of up to 132 printable characters, including spaces.

SET SEGMENTS

Determines the manner in which Manager Products program code segments are loaded into virtual storage.

```
>>-- SET SEGMENTS --+-------------+--+-RESIDENT--+-------------------+--;--+--><
                    | << , <<     |  |           |                   |  .  |
                    |   nn        |  +-PURGEABLE-+                   +-----+
```

where *nn* is the number of a Manager Products program code segment. Valid numbers are 3 to 80.

SET STRING-DELIMITER

Defines the string delimiter characters which are to be used at your installation.

```
>>-- SET STRING-DELIMITER character --+-ON--+-------------+--;--+--><
                                       +-OFF-+             |  .  |
```

where *character* is the delimiter character to be switched on or off.

SET TOP-MENU-ENTRY

Specifies the panel which displays when users enter the SELECT-TOP MENU command.

```
>>-- SET TOP-MENU-ENTRY panel-name ----------+--;--+--><
                                             |  .  |
```

where *panel-name* is the name of an INFOBANK member on the MPAID.

SET TRACE

Displays information as executive routines; and to provide general Manager Products debug information for use in problem resolution.

```
>>-- SET TRACE ------------------------------------------------------>
>>-+-OFF ----------------------------------------------+--;--+--><
   |-procl-trace -------------+                        |  .  |
   |-general-trace ------------+                       +-----+
   +-DDNAME--+-ddname ---------+
             +-* ------------- +
```

where:

ddname is a DDNAME. It can have a maximum of 8 characters.

procl-trace is:

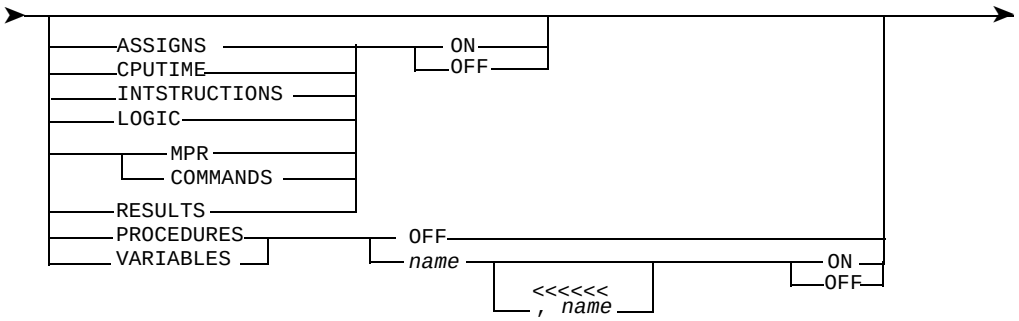

where *name* is the name of a procedure (maximum 10 characters) or a variable (maximum 50 characters).

general-trace is:

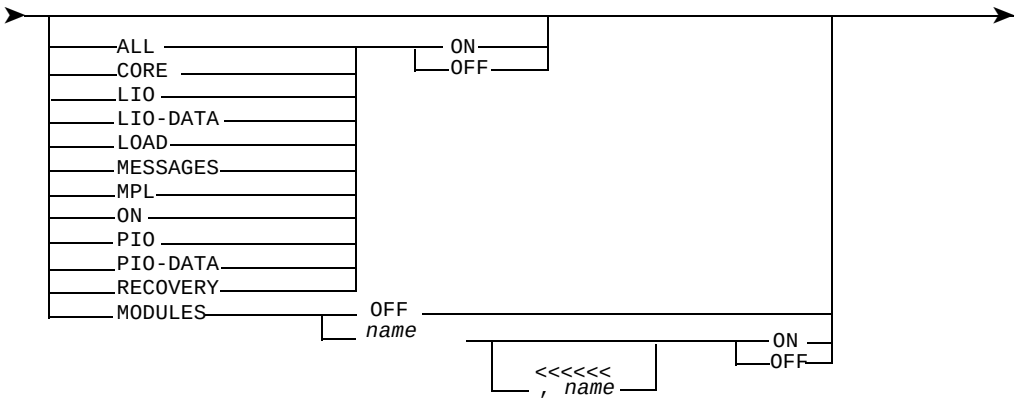

where *name* is the name of a module (maximum 8 characters).

SET UMI

See "SET USER-MEMBER-INDEX" on page 146.

SET USER-BLOCKS

Sets a limit on the amount of space available for the USER-MEMBERs owned by a particular logon indentifier.

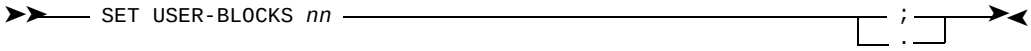

where *nn* is an integer up to 18 digits long.

SET USERE-DICTIONARY-SEARCH

Bypasses the User Member directory and access the Corporate Executive Routine directory only. Alternatively, both the User Member directory and the Corporate Executive Routine directory may be searched.

```
>>--- SET USER-DIRECTORY-SEARCH ---+-- ON  --+---------------+-- ; --+--><
                                    +-- OFF --+               +-- . --+
```

SET USER-MEMBER-INDEX

Specifies the size of the in-core index for USER-MEMBERs.

```
>>--- SET ---+-- USER-MEMBER-INDEX --+-- nn ---------------+-- ; --+--><
            +-- UMI ----------------+                      +-- . --+
```

where *nn* represents the required index size in K bytes.

SHOW UDS

Obtains details of the UDS table applicable to the repository currently open, or details of any UDS table model held on the MP-AID or held as a load module.

```
>>--- SHOW UDS TABLE table-name ---+-------------+---------+-- ; --+-->
                                   +-- FOR MSP --+         +-- . --+

>--- FULL ------------------------------------------------+-- ; --+--><
     +-- MEMBER-TYPES ---+-------------+--+                +-- . --+
     |                   +-- clause-1 --+  |
     |                                     |
     +-- USER-DEFINED ATTRIBUTES ---+-------+--+
                                    +-- clause-2 --+
```

where:

table-name is the name of a UDS table.

clause-1 is:

```
>-----------------------------------------------------------------------><
  +-------------------------------------------------------------+
  | <<<<<<<< , <<<<<<<<<<<                                      |
  +-- ENCODE ----------+-- KEYWORDS --+
  |   INTERROGATE -----+               |
  |   REPORT-DOWN-TO --+               |

>-----------------------------------------------------------------------><
  +-------------------------------------------------------------+   +-- HEIRARCHY --+
  | <<<<<< , <<<<<<<                                            |
  +-- STANDARD ---------+-- LITERALS --+
  |   SHORT ------------+               |
  |   LONG -------------+               |
  |   PLURAL -----------+               |
```

```
➤──┬──────────────
```

where *status-name* is a character string of not more than 32 characters.

STATUS LIST

Obtains a detailed list and/or diagram representing the statuses in the repository.

```
>>--- STATUS LIST ---------------------------------------------------->
>--+-------------+--+-------------------------------------------------+-->
   |  DICTIONARY |  |                <<<<<<<<<<< , <<<<<<<<<<<        |
   |             |  |  GIVING--+-- DISPLAY--+-------+--------------+|
   |             |  |          |            |  ONLY |              ||
   |             |  |          |-- BASE-OF ------------------------||
   |             |  |          |-- DEPENDENT-OF -------------------||
>--+-- ; --+-- . --+--------------------------------------------------><
```

STATUS MERGE

Combines two statuses (for example, to merge a status used for development work into a production status).

```
>>--- STATUS MERGE status-name INTO status-name-b ------------------->
>--+-------------------------------+--------------------------+-- ; --+--><
   |  RENAMED-AS status-name-c     |                          |   .   |
```

where *status-name*, *status-name-b*, *status-name-c* are character strings of not more than 32 characters.

STATUS NAME

Assigns name to unnamed statuses.

```
>>--- STATUS NAME <<<<< status-name , <<<<< ------------------------->
```

where *status-name* is a character string of not more than 32 characters.

STATUS PERMIT

Enables you to change the read-only or update condition of a status.

```
>>--- STATUS PERMIT --+-- UPDATE --+-- <<<<< status-name , <<<<< --+-- ; --+--><
                      |-- READ-ONLY |                              |   .   |
```

where *status-name* is a character string of not more than 32 characters.

STATUS PURGE-DATA-ENTRIES

Removes data entries dataset records from a status.

```
>>──── STATUS PURGE-DATA-ENTRIES status-name ──────────────────┬─;─┬──><
                                                               └─.─┘
```

where *status-name* is a character string of not more than 32 characters.

STATUS REMOVE

Removes a root status or a non-base status from the repository.

```
>>──── STATUS REMOVE status-name ──────────────────────────────┬─;─┬──><
                                                               └─.─┘
```

where *status-name* is a character string of not more than 32 characters.

STATUS RENAME

Changes the names of statuses.

```
>>──── STATUS RENAME status-name AS status-name-b ──────────────┬─;─┬──><
                                                               └─.─┘
```

where *status-name* and *status name-b* are character strings of not more than 32 characters.

STATUS UNFREEZE

Changes a base status into a non-base status and thus change the position of a status in the status hierarchy.

```
>>──── STATUS UNFREEZE status-name ────────────────────────────┬─;─┬──><
                                                               └─.─┘
```

where *status-name* is a character string of not more than 32 characters.

STATUS WINDOW

Controls the range of statuses processed when certain status related activities are undertaken by the Controller and/or individual repository users or groups of repository users.

```
>>──── STATUS WINDOW ──┬──PUSH ──────────────────────────────┬──────┬─;─┬──><
                       ├──POP──────────────────────────────┤      └─.─┘
                       ├──DISPLAY ─────────────────────────┤
                       │  <<<<<<<                          │
                       ├──for-one ─────────────────────────┤
                       │                                   │
                       ├──MAXIMUM──┬──┬──DISPLAY──────────┬┤
                       └──MINIMUM──┘  │                   │
                                      │                   │
                                      └──<<<<<<<          │
                                         for-two──────────┘
```

where *for-one* is:

```
                <<< , <<<<
➤──────FOR──┬─DIVERGING──┬──┬──────────────────────────────────────────➤
            ├─SELECTION──┤  │ ┌─IS window-range-1──┐
            └─OUTPUT─────┘  └─┴─DISPLAY────────────┴
```

window-range-1 is:

```
➤──┬─DICTIONARY──────────────────────────────────────────────────────➤
   ├─ROOT──────────────────────────────────────────────────────────┤
   ├─BASE──────────────────────────────────────────────────────────┤
   ├─CURRENT───────────────────────────────────────────────────────┤
   ├─BRANCH status-name────────────────────────────────────────────┤
   ├─ONLY status-id-clause─────────────────────────────────────────┤
   └─LATEST-VISIBLE-OCCURENCE──────────────────────────────────────┘
```

where:

status-name is the name of a status.

status-id-clause is:

```
                                                <<<< , <<<<
➤──CURRENT──┬──────────────────────────────────────────────────────┬──➤
            │                                                      │
            │                  ┌──────────────────────────────────┐
            │                  │                <<<< , <<<<       │
            │                  ├──────────────STATUSES status-name─┤
            │                  │                                  │
            └──AND─────────────┘                                  │
```

where *status-name* is as defined above.

for-two is:

```
                <<< , <<<<
➤──────FOR──┬─DIVERGING──┬──┬──────────────────────────────────────────➤
            ├─SELECTION──┤  │ ┌─IS window-range-2──┐
            ├─OUTPUT─────┤  └─┴─DISPLAY────────────┴
            ├─STATUS-LIST┤
            ├─READ-ONLY──┤
            └─UPDATE─────┘
```

window-range-2 is:

```
➤──┬─DICTIONARY──────────────────────────────────────────────────────➤
   ├─ROOT──────────────────────────────────────────────────────────┤
   ├─BASE──────────────────────────────────────────────────────────┤
   ├─CURRENT───────────────────────────────────────────────────────┤
   ├─BRANCH status-name────────────────────────────────────────────┤
   ├─ONLY status-id-clause─────────────────────────────────────────┤
   └─NONE──────────────────────────────────────────────────────────┘
```

where *status-name* and *status-id-clause* are as defined above.

Note:

The window-range LATEST-VISIBLE-OCCURRENCE is only valid for the SELECTION and OUTPUT window-types.

UNLOAD

Outputs a physical copy of a repository to magnetic tape or disk.

```
>>--- UNLOAD ---+---;---+---------------------------------------><
                 |   .   |
```

UX

Enables Toolset SERVICES in batch mode.

```
>>--- UX name mp-name ---+---ALL    ---+---------------------+---;---+---><
                         |---RULE010 ---|                     |   .   |
                         |---RULE020 ---|
                         |---RULE040 ---|
                         |---RULE050 ---|
                         |---RULE070 ---|
                         |---RULE080 ---|
```

where:

name is a HIERARCHY member-name.

mp-name is the MPAID name of the HIERARCHY.

VX

Generates part of a Life Cycle Model.

Primary Command:

```
>>--- VX member-name ---+---;---+---------------------------------------><
                        |   .   |
```

where *member-name* is the name of a LIFE-CYCLE, PHASE, ACTIVITY or LIFE-CYCLE-OBJECT-TYPE member.

Line Command:

```
>>--- VX ---------------------------------------------------------------><
```

VXA

Generates all or part of a Life Cycle Model.

Primary Command:

```
>>──── VXA member-name ──┬─ ; ─┬──────────────────────────────────────────><
                         └─ . ─┘
```

where *member-name* is the name of a LIFE-CYCLE, PHASE, ACTIVITY or LIFE-CYCLE-OBJECT-TYPE member.

Line Command:

```
>>──── VXA ──────────────────────────────────────────────────────────────><
```

VXC

Checks before generation that a Life Cycle Model has been correctly defined in the repository and that the name of the MP-AID members to be constructed are unique within the model.

Primary Command:

```
>>──── VXC member-name ──┬─ ; ─┬──────────────────────────────────────────><
                         └─ . ─┘
```

where *member-name* is the name of a LIFE-CYCLE member.

Line Command:

```
>>──── VXC ──────────────────────────────────────────────────────────────><
```

VXP

Displays the executive routine generated for a Life Cycle Object Type.

Primary Command:

```
>>──── VXP repository-name ──┬─ ; ─┬──────────────────────────────────────><
                             └─ . ─┘
```

where *repository-name* is the *repository-name* of a LIFE-CYCLE-OBJECT member.

Line Command:

```
>>──── VXP ──────────────────────────────────────────────────────────────><
```

XDISPLAY

Provides a hexadecimal display of virtual storage areas owned by Manager Products. This command should only be used under ASG supervision.

```
>>--- XDISPLAY --+-name----+--+-;-+--------------------------------><
           +-address-+  +-.-+
```

where:

name is the name of an Manager Products component.

address is the starting address of a Manager Products allocated virtual storage area.

XPRINT

Enables the Controller to obtain selective prints of a the internal formats of some parts of the repository to satisfy a need for maintenance. This command should only be used under ASG supervision.

```
>>--- XPRINT --+-- OFFSET ------------------------------------------>
               |-- PASSWORD ---------------------------------------|
               |-- OWNER ------------------------------------------|
               |-- STATUS -----------------------------------------|
               |-- REPAIR options ---------------------------------|
               |-- UDS-TABLE --------------------------------------|
               |--+-IEXTRACTRBA-+-- 8-string --+-IBLOCK-+----------|
               |  |-DEXTRACTRBA-|              |-DBLOCK-|          |
               |  |-SEXTRACTRBA-|              |-SBLOCK-|          |
               |                              |-ICHAIN-|          |
               |                              |-DCHAIN-|          |
               |                              |-SCHAIN-|          |
               |--+-IBLOCK-+-- 8-string ---------------------------|
               |  |-DBLOCK-|                                      |
               |  |-SBLOCK-|                                      |
               |  |-ICHAIN-|                                      |
               |  |-DCHAIN-|                                      |
               |  |-SCHAIN-|                                      |
               |--+-IZAP-+-- 8-string string-1 string-2 ----------|
               |  |-DZAP-|                                        |
               |  |-SZAP-|                                        |
               |                          <<<< , <<<               |
               |--+-MEMBER-+------------- index-name ------------|
               |  |-DATA   |                                      |
               |  |-SOURCE |                                      |
               |  |-ALIAS  |                                      |
               |  |-CATALOG |                                     |
               |  |-ATTRIBUTE |                                   |
>--+-;-+-------------------------------------------------------------><
   |-.-|
```

where *options* is:

```
>--+-MEMBER member-name ------------+------------------------------>
   |-CATALOGUE catalogue-name -------|
   |-ALIAS alias-name ---------------|
   |-ATTRIBUTE attribute-name -------|
```

Appendix A

Name, Status, Time, and User-Related-Selection

Secondary Selection Clauses: Name-related-selection

```
>>-+-FROM a ------------+-------------+-------------------------<<
   |                   |             |
   |                   |             |
   |                   |             |
```

where:

p end *q* are integers. The alphanumeric value of *p* must be less than the alphanumeric value of *q*.

string is a character string of between 1 and 32 printable characters.

name-end is:

```
➤──────END──┬──────────────
```

Secondary Selection Clauses: Time and User-related-selection

```
                                   AND
<<
```

user is:

```
➤──────BY──┬──┬──────────┬──user-name──┬──────────────────────────➤
           │  └──USER────┘             │
           └──MASTER──────────────────┘
```

where:

user-name is the name of a user registered in the repository.

status is:

```
➤──────IN──┬──────────┬──status-name──────────────────────────────➤
           └──STATUS──┘
```

where *status-name* is the name of a status visible from the current status.

Appendix B
Features Table

This table lists:

- All the commands, member types, and procedures language instructions documented in this manual.
- The functional and selectable unit codes of the ASG-MethodManager and non-ASG-MethodManager products they are supplied with.

Keywords within a command are also listed if they are supplied with an additional selectable or functional unit.

To find out:

- The commands available in your environment use the QUERY PRIMARY and QUERY LINE-COMMAND commands
- The PRODUCT available in your environment use the ENVIRONMENT command or ASG-MethodManager paneL TZ80000
- The member types available in your environment use the SHOW UDS command.

Name	FU Code(s)	SU Code(s)
+	MMR-FW20	No equivalent
*	MMR-FW20	CMR-FE01
/	MMR-FW20	CMR-FE01
?	MMR-FW20	No equivalent
??DUP	MMR-FW20	No equivalent
??EXTRACT	MMR-FW20	No equivalent
??INCLUDE	MMR-FW20	No equivalent
??LINE	MMR-FW20	No equivalent
??LMAR	MMR-FW20	No equivalent
??PAGE	MMR-FN20	No equivalent
??PBOT	MMR-FN20	No equivalent

Name	FU Code(s)	SU Code(s)
??PTOP	MMR-FN20	No equivalent
??RMAR	MMR-FN20	No equivalent
??SKIP	MMR-FN20	No equivalent
??TITLE	MMR-FN20	No equivalent
=	MMR-FW20	No equivalent
"	MMR-FW20	CMR-FE01
A	MMR-FW20	CMR-FE01
ABBREV	MMR-FW30 or MMR-FW20	DYR-TE00 or CMR-UD05
ABEND	MMR-FW30	CMR-CM01
ACCEPT	MMR-FW20	No equivalent
ACT	MMR-FW10	No equivalent
ACTIVATE	MMR-FW10	No equivalent
ADD	MMR-FW30	CMR-CM01
ADIS	MMR-FW20	No equivalent
ADISPLAY	MMR-FW20	No equivalent
ADW EXPORT	MMR-PF72 and MMR- FN27	DYR-TE15
ADW IMPORT	MMR-PF72 and MMR- FN28	DYR-TI15
AGET	MMR-FW20	No equivalent
AGETC	MMR-FW20	No equivalent
ALSO KEEP	MMR-PF61	DMR-DD1
ALTER	MMR-FW30	CMR-CM01
AMEND	MMR-FW30	CMR-CM01
ARG	MMR-FW30 or MMR-FW20	DYR-TE00 or CMR-UD05
ARRAYGEN	MMR-FW30	DYR-TE00
ARRAYHI	MMR-FW30 or MMR-FW20	DYR-TE00 or CMR-UD05
ARRAYLO	MMR-FW30 or MMR-FW20	DYR-TE00 or CMR-UD05
ASM	MMR-PF33 and MMR-FN27	DMR-SL3

Name	FU Code(s)	SU Code(s)
AUPD	MMR-FW20	No equivalent
AUPDATE	MMR-FW20	No equivalent
AUTHORITY	MMR-FW30	CMR-CM01
B	MMR-FW20	No equivalent
BACKWARD	MMR-FW30	CMR-CM01
BOTTOM	MMR-FW30	CMR-CM01
BROWSE	MMR-FW20	CMR-FE01
BS2000	MMR-PF44	CMR-TP11
BS2000 ACTIVATE CURSOR-CONTROL	MMR-PF44	CMR-TP11
BS2000 ACTIVATE P-KEY-PROTECTION	MMR-PF44	CMR-TP11
BS2000 ACTIVATE STXIT-TRACE	MMR-PF44	CMR-TP11
BS2000 BREAKPOINT	MMR-PF44	CMR-TP11
BS2000 DEACTIVATE CURSOR-CONTROL	MMR-PF44	CMR-TP11
BS2000 DEACTIVATE P-KEY-PROTECTION	MMR-PF44	CMR-TP11
BS2000 DEACTIVATE STXIT-TRACE	MMR-PF44	CMR-TP11
BS2000 EXECUTE &EDT	MMR-PF44	CMR-TP11
BS2000 EXECUTE &LMS	MMR-PF44	CMR-TP11
BS2000 HELP	MMR-PF44	CMR-TP11
BS2000 QUERY CORE	MMR-PF44	CMR-TP11
BS2000 QUERY ENQUEUE-TABLES	MMR-PF44	CMR-TP11
BS2000 QUERY ERRORS	MMR-PF44	CMR-TP11
BS2000 QUERY FILES	MMR-PF44	CMR-TP11
BS2000 QUERY MODULES	MMR-PF44	CMR-TP11
BS2000 RESET P-KEYS	MMR-PF44	CMR-TP11
BS2000 RESET EDT-AREAS	MMR-PF44	CMR-TP11
BS2000 SET P-KEYS	MMR-PF44	CMR-TP11

Name	FU Code(s)	SU Code(s)
BUILD	MMR-FW30	DYR-TE00
BULK	MMR-PF61	DMR-DD1
ALL-STATUSES	MMR-FN30	CMR-DD2 or CMR-AD21
AMENDED	MMR-FN30	MMR-DD2 or CMR-AD21
CHANGED	MMR-FN30	CMR-DD2 or CMR-AD21
CHECK	MMR-PF61	No equivalent
CHECK-NEEDED	MMR-PF61	No equivalent
CHECK-OK	MMR-PF61	No equivalent
CURRENT	MMR-FN30	CMR-DD2 or CMR-AD21
DIVERGING	MMR-FN30	CMR-DD2 or CMR-AD21
GENERIC	MMR-FW20	CMR-UD1
LOCKED	MMR-FW30	CMR-WS01
NEW	MMR-FN30	CMR-DD2 or CMR-AD21
UNVERIFIED	MMR-FN30	CMR-DD2 or CMR-AD21
REVERIFIED	MMR-FN30	CMR-DD2 or CMR-AD21
C	MMR-FW20	CMR-FE01
CALCULATE	MMR-FN24	DSR-PH10
CALL	MMR-FW30 or MMR-FW20	DYR-TE00
CANCEL	MMR-FW20	No equivalent
CC	MMR-FW20	CMR-FE01
CENTER	MMR-FW30 or MMR-FW20	DYR-TE00
CENTRE	MMR-FW30 or MMR-FW20	DYR-TE00
CEXEC	MMR-FW30 or MMR-FW20	DYR-TE00
CHANGE	MMR-FW20	CMR-FE01
CHECK	MMR-PF61	No equivalent
CLEAR	MMR-FW30	CMR-CM01
CLOSE	MMR-FW30	CMR-CM01
CLOSEF	MMR-FW30	DYR-TE00
CMS	MMR-PF48	CMR-TP8

Name	FU Code(s)	SU Code(s)
COB	MMR-PF31 and MMR-FN27	No equivalent
COBOL	MMR-PF31 and MMR-FN27	No equivalent
COMMAND	MMR-FW30 or MMR-FW20	DYR-TE00 or CMR-UD05
CONVERT		
COBOL	MMR-PF31 and MMR-FN28	DMR-AS1
PL/I	MMR-PF32 and MMR-FN28	DMR-AS2
COPIES	MMR-FW30 or MMR-FW20	DYR-TE00 or CMR-UD05
COPY	MMR-FW30	CMR-CM01
FROM	MMR-FN30	CMR-DD2 or CMR-AD21
COPYRIGHT	MMR-FW30	CMR-CM01
CORPORATE-EXECUTIVE	MMR-FW30 or MMR-FW20	DYR-TE00 or CMR-UD05
D	MMR-FW20	CMR-FE01
DACCESS	MMR-FW30	DYR-TE00
DACT	MMR-FW10	No equivalent
DB2 ALTER	MMR-PF21 and MMR-FN27	DYR-TE12
DB2 BIND	MMR-PF21 and MMR-FN27	DYR-TE12
DB2 COMMENT	MMR-PF21 and MMR-FN27	DYR-TE12
DB2 CREATE	MMR-PF21 and MMR-FN27	DYR-TE12
DB2 DEBUG	MMR-PF21 and MMR-FN27	DYR-TE12
DB2 DECLARE	MMR-PF21 and MMR-FN27	DYR-TE12
DB2 DROP	MMR-PF21 and MMR-FN27	DYR-TE12
DB2 GRANT	MMR-PF21 and MMR-FN27	DYR-TE12

Name	FU Code(s)	SU Code(s)
DB2 LABEL	MMR-PF21 and MMR-FN27	DYR-TE12
DB2 LIST CYCLES	MMR-FN24	DSR-PH02
DB2 LIST TABLES	MMR-FN24	DSR-PH02
DB2 PLOT CLUSTER	MMR-FN24	DSR-PH02
DB2 PLOT REFERENTIAL-STRUCTURES	MMR-FN24	DSR-PH02
DB2 POPULATE	MMR-FN24	DSR-PH02
USING FORMAT	MMR-FN24	DSR-UD30
DB2 PREVIEW	MMR-FN24	DSR-PH02
USING FORMAT	MMR-FN24	DSR-UD30
DB2 PRODUCE	MMR-PF21 and MMR-FN27	DYR-TE12
DB2 REBIND	MMR-PF21 and MMR-FN27	DYR-TE12
DB2 RECALCULATE	MMR-PF21 and MMR-FN27	DYR-TE12
DB2 REPORT	MMR-FN24	DSR-PH02
USING FORMAT	MMR-FN24	DSR-UD30
DB2 REVOKE	MMR-PF21 and MMR-FN27	DYR-TE12
DB2 SIZE	MMR-PF21 and MMR-FN27	DYR-TE12
DB2 SYNONYM	MMR-PF21 and MMR-FN27	DYR-TE12
DB2-ALIAS	MMR-PF21	DMR-DD12
DB2-DATABASE	MMR-PF21	DMR-DD12
DB2-INDEX	MMR-PF21	DMR-DD12
DB2-LOCATION	MMR-PF21	DMR-DD12
DB2-PRIVILEGE	MMR-PF21	DMR-DD12
DB2-STOGROUP	MMR-PF21	DMR-DD12
DB2-TABLE	MMR-PF21	DMR-DD12
DB2-TBSPACE	MMR-PF21	DMR-DD12
DB2-USER	MMR-PF21	DMR-DD12

Name	FU Code(s)	SU Code(s)
DB2-VIEW	MMR-PF21	DMR-DD12
DCUPD	MMR-FN20	No equivalent
DD	MMR-FW20	CMR-FE01
DEACTIVATE	MMR-FW10	No equivalent
DELETE	MMR-FW20	CMR-FE01
DESIGN	MMR-FN24	DSR-DS01
USING FORMAT	MMR-FN24	DSR-UD30
DEXPAND	MMR-FW30	DYR-TE00
DIAGRAM	MMR-FW30	CMR-WS01
DICTIONARY	MMR-FW30	CMR-CM01
DIS	MMR-FW20	No equivalent
DISPLAY	MMR-FW20	No equivalent
DL/I LIST	MMR-FN24	DSR-PH05
DL/I MAP	MMR-FN24	DSR-PH05
DL/I REPORT	MMR-FN24	DSR-PH05
DL/I-DATABASE GSAM	MMR-PF24	DMR-DD5
DL/I-DATABASE HDAM	MMR-PF24	DMR-DD5
DL/I-DATABASE HIDAM	MMR-PF24	DMR-DD5
DL/I-DATABASE HISAM	MMR-PF24	DMR-DD5
DL/I-DATABASE HSAM	MMR-PF24	DMR-DD5
DL/I-DATABASE INDEX	MMR-PF24	DMR-DD5
DL/I-DATABASE LOGICAL	MMR-PF24	DMR-DD5
DL/I-DATABASE SECONDARY-INDEX	MMR-PF24	DMR-DD5
DMS	MMR-FW30	CMR-CM01
DO	MMR-FW30 or MMR-FW20	DYR-TE00 or CMR-UD05
DOC	MMR-FN10	No equivalent
DOES	MMR-PF61	DMR-DD1
DOWN	MMR-FW20	CMR-FE01
DRELEASE	MMR-FW30	DYR-TE00

Name	FU Code(s)	SU Code(s)
DRETRIEVE	MMR-FW30	DYR-TE00
DROP command	MMR-PF61	DMR-DD1
DROP directive	MMR-FW30 or MMR-FW20	DYR-TE00 or CMR-UD05
EDDATE	MMR-FW30 or MMR-FW20	DYR-TE00 or CMR-UD05
EDIT	MMR-FW20	CMR-FE01
EDTIME	MMR-FW30 or MMR-FW20	DYR-TE00 or CMR-UD05
ENCODE	MMR-FW30	CMR-CM01
END command	MMR-FW30	CMR-CM01
END directive	MMR-FW30 or MMR-FW20	DYR-TE00 or CMR-UD05
ENVIRONMENT	MMR-FW30	CMR-CM01
ERASE KEPT-DATA	MMR-FW30	CMR-CM01
EXECUTE	MMR-FW20	CMR-FE01
EXIT	MMR-FW30 or MMR-FW20	DYR-TE00 or CMR-UD05
EXTRACT command	MMR-FW30	DYR-TE00
EXTRACT function	MMR-FW30 or MMR-FW20	DYR-TE00 or CMR-UD05
EXTRACT DB2	MMR-PF21 and MMR-FN28	DYR-TI12
EXTRACT SQL	MMR-PF22 and MMR-FN28	DYR-TI32
F	MMR-FW20	CMR-FE01
FDO	MMR-FW30 or MMR-FW20	DYR-TE00 or CMR-UD05
FETCH KEPT-DATA	MMR-FW30	CMR-CM01
FETCH WBDA MMR	MMR-FN24	DSR-DS01
FILE	MMR-FW20	CMR-FE01
FIND	MMR-FW20	CMR-FE01
FLUSH	MMR-FN24	DSR-DS01
FORMAT		
AS	MMR-FW30	CMR-CM01

Name	FU Code(s)	SU Code(s)
VIA	No equivalent	DYR-UD15
FORWARD	MMR-FW30	CMR-CM01
FREE	MMR-FW30	CMR-CM01
GETD	MMR-FW20	CMR-FE01
GETE	MMR-FW20	CMR-FE01
GETS	MMR-FW20	CMR-FE01
GETT	MMR-FW20	CMR-FE01
GETU	MMR-FW20	CMR-FE01
GET-DICTIONARY	MMR-FW20	CMR-FE01
GET-EXECUTIVE	MMR-FW20	CMR-FE01
GET-SCRATCHPAD	MMR-FW20	CMR-FE01
GET-TRANSIENT	MMR-FW20	CMR-FE01
GET-USER	MMR-FW20	CMR-FE01
GLOBAL	MMR-FW30 or MMR-FW20	DYR-TE00 or CMR-UD05
GLOSSARY	MMR-PF61	DMR-DD1
ALL-STATUSES	MMR-FN30	CMR-DD2 or CMR-AD21
AMENDED	MMR-FN30	CMR-DD2 or CMR-AD21
CHANGED	MMR-FN30	CMR-DD2 or CMR-AD21
CHECK-NEEDED	MMR-PF61	No equivalent
CHECK-OK	MMR-PF61	No equivalent
CURRENT	MMR-FN30	CMR-DD2 or CMR-AD21
DIVERGING	MMR-FN30	CMR-DD2 or CMR-AD21
GENERIC	MMR-FW20	CMR-UD1
LOCKED	MMR-FW30	CMR-WS01
NEW	MMR-FN30	CMR-DD2 or CMR-AD21
UNVERIFIED	MMR-FN30	CMR-DD2 or CMR-AD21
REVERIFIED	MMR-FN30	CMR-DD2 or CMR-AD21
GOTO	MMR-FW30 or MMR-FW20	DYR-TE00 or CMR-UD05
HARDCOPY	MMR-FW20	No equivalent
HELP	MMR-FW30	CMR-CM01

Name	FU Code(s)	SU Code(s)
HOLD	MMR-FW20	CMR-FE01
I	MMR-FW20	CMR-FE01
IDMS-AREA	No equivalent	DMR-DD8
IDMS-DATABASE	No equivalent	DMR-DD8
IDMS-LOGICAL-RECORD	No equivalent	DMR-DD8
IDMS-PATH-GROUP	No equivalent	DMR-DD8
IDMS-RECORD	No equivalent	DMR-DD8
IDMS-SET	No equivalent	DMR-DD8
IDMS-SUBSCHEMA	No equivalent	DMR-DD8
IDMS-VIEW	No equivalent	DMR-DD8
IEW EXPORT	MMR-PF71 and MMR-FN27	DYR-TE14
IEW IMPORT	MMR-PF71 and MMR-FN28	DYR-TE14
IF	MMR-FW30 or MMR-FW20	DYR-TE00 or CMR-UD05
IMS LIST	MMR-FN24	DSR-PH05
IMS MAP	MMR-FN24	DSR-PH05
IMS REPORT	MMR-FN24	DSR-PH05
IMS-DATABASE GSAM	MMR-PF24	DMR-DD5
IMS-DATABASE HDAM	MMR-PF24	DMR-DD5
IMS-DATABASE HIDAM	MMR-PF24	DMR-DD5
IMS-DATABASE HISAM	MMR-PF24	DMR-DD5
IMS-DATABASE HSAM	MMR-PF24	DMR-DD5
IMS-DATABASE INDEX	MMR-PF24	DMR-DD5
IMS-DATABASE LOGICAL	MMR-PF24	DMR-DD5
IMS-DATABASE SECONDARY-INDEX	MMR-PF24	DMR-DD5
INFOBANK	MMR-FW30	CMR-CM01
INFO-BANK	MMR-FW30	CMR-CM01
INSERT command	MMR-FW30	CMR-CM01

Name	FU Code(s)	SU Code(s)
INSERT function	MMR-FW30 or MMR-FW20	DYR-TE00 or CMR-UD05
INTERPRET	MMR-FW30 or MMR-FW20	DYR-TE00 or CMR-UD05
ISPF	MMR-PF47	CMR-TP7
ISQL	MMR-FW30	DYR-TE00
ITERATE	MMR-FW30 or MMR-FW20	DYR-TE00 or CMR-UD05
JUSTIFY	MMR-FW20	CMR-FE01
K	MMR-FW20	CMR-FE01
KK	MMR-FW20	CMR-FE01
KEEP	MR-PF61	DMR-DD1
KPUT	MMR-FW20	CMR-FE01
LADD	MMR-FW20	CMR-FE01
LASTPOS	MMR-FW30 or MMR-FW20	DYR-TE00 or CMR-UD05
LCS	MMR-FW10	No equivalent
LEAVE	MMR-FW30 or MMR-FW20	DYR-TE00 or CMR-UD05
LEFT command	MMR-FW30	CMR-CM01
LEFT function	MMR-FW30 or MMR-FW20	DYR-TE00 or CMR-UD05
LENGTH	MMR-FW30 or MMR-FW20	DYR-TE00 or CMR-UD05
LIST	MMR-FW30	CMR-CM01
ALL-STATUSES	MMR-FN30	CMR-DD2 or CMR-AD21
AMENDED	MMR-FN30	CMR-DD2 or CMR-AD21
CHANGED	MMR-FN30	CMR-DD2 or CMR-AD21
CHECK-NEEDED	MMR-PF61	No equivalent
CHECK-OK	MMR-PF61	No equivalent
CURRENT	MMR-FN30	CMR-DD2 or CMR-AD21
DIVERGING	MMR-FN30	CMR-DD2 or CMR-AD21
GENERIC	MMR-FW20	CMR-UD1
LOCK-INFORMATION	MMR-FW30	CMR-WS01

Name	FU Code(s)	SU Code(s)
LOCKED	MMR-FW30	CMR-WS01
LOCKS	MMR-FW30	CMR-WS01
NEW	MMR-FN30	CMR-DD2 or CMR-AD21
REVERIFIED	MMR-FN30	CMR-DD2 or CMR-AD21
UNVERIFIED	MMR-FN30	CMR-DD2 or CMR-AD21
LIST data modeling and design	MMR-FN24	DSR-DS01
LITERAL	MMR-FW30 or MMR-FW20	DYR-TE00 or CMR-UD05
LOCAL	MMR-FW30 or MMR-FW20	DYR-TE00 or CMR-UD05
LOCATE	MMR-FW20	CMR-FE01
LOCK	MMR-FW30	CMR-WS01
LOGOFF	MMR-FW30	CMR-CM01
LOGON	MMR-FW30	CMR-CM01
LOOKASIDE	MMR-FW20	CMR-FE01
LOWER	MMR-FW30 or MMR-FW20	DYR-TE00 or CMR-UD05
M	MMR-FW20	CMR-FE01
MAIL	MMR-FW30	CMRUI1
MATRIX	MMR-PF61	No equivalent
MEMTYPE	MMR-FW30 or MMR-FW20	DYR-TE00 or CMR-UD05
MER	MMR-FN24	No equivalent
MERE	MMR-FN24	No equivalent
MERGE		
COBOL	MMR-PF31 and MMR-FN28	DMR-AS1
PL/I	MMR-PF32 and MMR-FN28	DMR-AS2
MERGE data modeling and design	MMR-FN24	DSR-DS01
MERU	MMR-FN24	DSR-DS01
MERUE	MMR-FN24	DSR-DS01

Name	FU Code(s)	SU Code(s)
MESSAGE	MMR-FW30 or MMR-FW20	DYR-TE00 or CMR-UD05
MM	MMR-FW20	CMR-FE01
MODE		
DMS	MMR-FW30	CMR-CM01
WBDA	MMR-FN24	DSR-DS01
MODIFY	MMR-FW30	CMR-CM01
MOVE	MMR-FW20	CMR-FE01
MP-AID CONCATENATION LIST	MMR-FW30	CMR-CM01
MP-AID DELETE	MMR-FW30	CMR-CM01
MP-AID EXEC-LIST	MMR-FW30	CMR-CM01
MP-AID LIST	MMR-FW30	CMR-CM01
MP-AID PASSWORD	MMR-FW30	CMR-CM01
MP-AID PRINT	MMR-FW30	CMR-CM01
MPR	MMR-FW30 or MMR-FW20	DYR-TE00 or CMR-UD05
MPRAID	MMR-FW30 or MMR-FW20	DYR-TE00 or CMR-UD05
MPRCMPW	MMR-FW30 or MMR-FW20	DYR-TE00 or CMR-UD05
MPRDDPW	MMR-FW30 or MMR-FW20	DYR-TE00 or CMR-UD05
MPRSU	MMR-FW30 or MMR-FW20	DYR-TE00 or CMR-UD05
MPRUCLS	MMR-FW30 or MMR-FW20	DYR-TE00 or CMR-UD05
MPRUDSN	MMR-FW30 or MMR-FW20	DYR-TE00 or CMR-UD05
MPXX	MMR-FW30 or MMR-FW20	DYR-TE00 or CMR-UD05
MTHELP	MMR-FW20	No equivalent
MVW	MMR-FW30	CMR-WS01
NAME	MMR-FN24	DSR-DS01
NDATE	MMR-FW30 or MMR-FW20	DYR-TE00 or CMR-UD05

Name	FU Code(s)	SU Code(s)
NEXT	MMR-FW20	CMR-FE01
NOP	MMR-FW30 or MMR-FW20	DYR-TE00 or CMR-UD05
NOPRINT	MMR-FW30	CMR-CM01
NTIME	MMR-FW30 or MMR-FW20	DYR-TE00 or CMR-UD05
OVERLAY	MMR-FW30 or MMR-FW20	DYR-TE00 or CMR-UD05
P	MMR-FW20	CMR-FE01
PANEL	MMR-FW30	CMR-CM01
PARSABLE	MMR-FW30 or MMR-FW20	DYR-TE00 or CMR-UD05
PARSE	MMR-FW30 or MMR-FW20	DYR-TE00 or CMR-UD05
PARSEOPTION	MMR-FW30 or MMR-FW20	DYR-TE00 or CMR-UD05
PERFORM	MMR-PF61	DMR-DD1
AMENDED	MMR-FN30	CMR-DD2 or CMR-AD21
CHANGED	MMR-FN30	CMR-DD2 or CMR-AD21
CHECK-NEEDED	MMR-PF61	No equivalent
CHECK-OK	MMR-PF61	No equivalent
CURRENT	MMR-FN30	CMR-DD2 or CMR-AD21
DIVERGING	MMR-FN30	CMR-DD2 or CMR-AD21
GENERIC	MMR-FW20	CMR-UD1
LOCKED	MMR-FW30	CMR-WS01
NEW	MMR-FN30	CMR-DD2 or CMR-AD21
UNVERIFIED	MMR-FN30	CMR-DD2 or CMR-AD21
REVERIFIED	MMR-FN30	CMR-DD2 or CMR-AD21
PL/I	MMR-FN27 and MMR-PF32	
PLOT	MMR-FN24	DSR-UD31
POPULATE		
ENTITIES	MMR-FN24	DSR-DS01
FROM	MMR-FW30	DYR-TE00

Name	FU Code(s)	SU Code(s)
USERVIEWS	MMR-FN24	DSR-DS01
USING FORMAT	MMR-FN24	DSR-UD30
POS	MMR-FW30 or MMR-FW20	DYR-TE00 or CMR-UD05
POST	MMR-FW30	CMR-UI1
PREVIEW		
ENTITIES	MMR-FN24	DSR-DS01
IMPORT	MMR-FW30	DYR-TE00
USERVIEWS	MMR-FN24	DSR-DS01
USING FORMAT	MMR-FN24	DSR-UD30
PRINT	MMR-FW30	CMR-CM01
ALL-STATUSES	MMR-FN30	CMR-DD2 or CMR-AD21
PRODUCE		
ASSEMBLER	MMR-PF33 and MMR-FN27	DMR-SL3
COBOL	MMR-PF31 and MMR-FN27	DMR-SL1
PL/I	MMR-PF32 and MMR-FN27	DMR-SL2
PRODUCE DB2	MMR-FN24	DSR-PH02
PRODUCE DL/I DBDGEN	MMR-PF25 and MMR-FN27	DMR-SL5
PRODUCE DL/I PSBGEN	MMR-PF25 and MMR-FN27	DMR-SL5
PRODUCE IMS DBDGEN	MMR-PF24 and MMR-FN27	DMR-SL5
PRODUCE IMS PSBGEN	MMR-PF24 and MMR-FN27	DMR-SL5
PRODUCE SQL	MMR-FN24	DSR-PH01
PROJLIST	MMR-FN10	No equivalent
PROJVIEW	MMR-FN10	No equivalent
PROTECT	MMR-FW30	CMR-DD3
PTIME	MMR-FW30 or MMR-FW20	DYR-TE00 or CMR-UD05
PULL	MMR-FW30	CMR-CM01

Name	FU Code(s)	SU Code(s)
PUR	MMR-FW20	No equivalent
PURGE	MMR-FW20	No equivalent
PUSH	MMR-FW30	CMR-CM01
PUT	MMR-FW20	CMR-FE01
Q	MMR-FW20	CMR-FE01
QQ	MMR-FW20	CMR-FE01
QUERY ABEND-MESSAGE	MMR-FW30	CMR-CM01
QUERY ACTIVE-BUFFERS	MMR-FW30	CMR-CM01
QUERY ALERT	MMR-FW30	CMR-CM01
QUERY ALL	MMR-FW30	CMR-CM01
QUERY AMBIGUITY-ASSUMPTION	MMR-FW30	CMR-CM01
QUERY AUTOSKIP	MMR-FW30	CMR-CM01
QUERY BLANK-LINE-DISPLAY	MMR-FW30	CMR-CM01
QUERY BROWSE-EDIT	MMR-FW30	CMR-CM01
QUERY BROWSE-RETENTION	MMR-FW30	CMR-CM01
QUERY BUFFER-LIMIT	MMR-FW30	CMR-CM01
QUERY CEI MMR	MMR-FW30	CMR-CM01
QUERY CHARACTER-TRANLSATION	MMR-FW30	CMR-CM01
QUERY CHECK-CHARACTER	MMR-FW30	CMR-CM01
QUERY CMI	MMR-FW30	CMR-CM01
QUERY COMMAND-LINE	MMR-FW30	CMR-CM01
QUERY COMMAND-MEMBER-INDEX	MMR-FW30	CMR-CM01
QUERY COMMAND-RETENTION	MMR-FW30	CMR-CM01
QUERY CORPORATE-EXECUTIVE-INDEX	MMR-FW30	CMR-CM01

Name	FU Code(s)	SU Code(s)
QUERY COUNTER	MMR-FW30	CMR-CM01
QUERY CURSOR-HOLD	MMR-FW30	CMR-CM01
QUERY DICTIONARY	MMR-FW30	CMR-CM01
QUERY DICTIONARY-UPDATES	MMR-FW30	CMR-CM01
QUERY DIRECTLY-ASSUMPTION	MMR-FW30	CMR-CM01
QUERY DISABLED-MPAID-CHECK	MMR-FW30	CMR-CM01
QUERY DBCS-MODE	MMR-FW30	CMR-CM01
QUERY DBCS-STRING-DELIMITER	MMR-FW30	CMR-CM01
QUERY DSR	MMR-FW30	CMR-CM01
QUERY ECHO	MMR-FW30	CMR-CM01
QUERY ENQUEUE-TRACE	MMR-FW30	CMR-CM01
QUERY ENTER-KEY	MMR-FW30	CMR-CM01
QUERY ESCAPE-CHARACTER	MMR-FW30	CMR-CM01
QUERY EXCP-LIMIT	MMR-FW30	CMR-CM01
QUERY EXCP-MONITOR	MMR-FW30	CMR-CM01
QUERY EXEC-WRITE	MMR-FW30	CMR-CM01
QUERY EXECUTIVE-RETENTION	MMR-FW30	CMR-CM01
QUERY FORMAT	MMR-FW30	CMR-CM01
QUERY FORMAT-TITLE	MMR-FW30	CMR-CM01
QUERY FREE-POOL	MMR-FW30	CMR-CM01
QUERY HELP-ENTRY	MMR-FW30	CMR-CM01
QUERY INDEX-PANEL	MMR-FW30	CMR-CM01
QUERY INFOBANK-ENTRY	MMR-FW30	CMR-CM01
QUERY INFOBANK-PANEL-INDEX	MMR-FW30	CMR-CM01
QUERY INFOBANK-SELECT	MMR-FW30	CMR-CM01

Name	FU Code(s)	SU Code(s)
QUERY INTERROGATE-ENQUEUE	MMR-FW30	CMR-CM01
QUERY IO-FLUSH-LIMIT	MMR-FW30	CMR-CM01
QUERY IPI	MMR-FW30	CMR-CM01
QUERY KANJI-MODE	MMR-FW30	CMR-CM01
QUERY KANJI-STRING-DELIMITER	MMR-FW30	CMR-CM01
QUERY KEPT-DATA	MMR-FW30	CMR-CM01
QUERY LA-RETENTION	MMR-FW30	CMR-CM01
QUERY LINE-AREA	MMR-FW30	CMR-CM01
QUERY LINE-COMMANDS	MMR-FW30	CMR-CM01
QUERY LINE-END-CHARACTER	MMR-FW30	CMR-CM01
QUERY LINEAR-RETENTION	MMR-FW30	CMR-CM01
QUERY LIST-SHIFT	MMR-FW30	CMR-CM01
QUERY LOADLIST	MMR-FW30	CMR-CM01
QUERY LOGON-ID	MMR-FW30	CMR-CM01
QUERY LOOKASIDE-RETENTION	MMR-FW30	CMR-CM01
QUERY LUW	MMR-FW30	CMR-CM01
QUERY MESSAGE-LANGUAGE	MMR-FW30	CMR-CM01
QUERY MODE	MMR-FW30	CMR-CM01
QUERY MPAID-UPDATES	MMR-FW30	CMR-CM01
QUERY NUMBERS	MMR-FW30	CMR-CM01
QUERY ONLINE-USERS	MMR-FW30	CMR-CM01
QUERY OUTPUT-EDIT	MMR-FW30	CMR-CM01
QUERY OUTPUT-LINE-LIMIT	MMR-FW30	CMR-CM01
QUERY PAGE-HEADINGS	MMR-FW30	CMR-CM01
QUERY PAGE-LENGTH	MMR-FW30	CMR-CM01

Name	FU Code(s)	SU Code(s)
QUERY PERFORM-CHARACTER	MMR-FW30	CMR-CM01
QUERY PFKEYS	MMR-FW30	CMR-CM01
QUERY PREFIX-AREA	MMR-FW30	CMR-CM01
QUERY PREFIX-COMMANDS	MMR-FW30	CMR-CM01
QUERY PRIMARY-COMMANDS	MMR-FW30	CMR-CM01
QUERY PRINT-DELIMITERS	MMR-FW30	CMR-CM01
QUERY PRINT-SHIFT	MMR-FW30	CMR-CM01
QUERY RESERVED-INFOBANK-LINE	MMR-FW30	CMR-CM01
QUERY RETAINED-EXECUTIVES	MMR-FW30	CMR-CM01
QUERY REVISION-BARS	MMR-FW30	CMR-CM01
QUERY SCALE	MMR-FW30	CMR-CM01
QUERY SCREEN-REFRESH	MMR-FW30	CMR-CM01
QUERY SCROLL-LIMIT	MMR-FW30	CMR-CM01
QUERY SEGMENT	MMR-FW30	CMR-CM01
QUERY SOS-DUMP	MMR-FW30	CMR-CM01
QUERY SPACE-LINE-DISPLAY	MMR-FW30	CMR-CM01
QUERY STORAGE	MMR-FW30	CMR-CM01
QUERY STRING-DELIMITER	MMR-FW30	CMR-CM01
QUERY SUBSTITUTION-CHARACTER	MMR-FW30	CMR-CM01
QUERY TAB-CHARACTER	MMR-FW30	CMR-CM01
QUERY TABS	MMR-FW30	CMR-CM01
QUERY TOP-MENU-ENTRY	MMR-FW30	CMR-CM01
QUERY TRANLSATION	MMR-FW30	CMR-CM01
QUERY UMI	MMR-FW30	CMR-CM01

Name	FU Code(s)	SU Code(s)
QUERY UPDATE-OUTPUT	MMR-FW30	CMR-CM01
QUERY UPPER-CASE	MMR-FW30	CMR-CM01
QUERY USER-BLOCKS	MMR-FW30	CMR-CM01
QUERYS USER-DIRECTORY-SEARCH	MMR-FW30	CMR-CM01
QUERY USER-MEMBER-INDEX	MMR-FW30	CMR-CM01
QUERY VERIFY	MMR-FW30	CMR-CM01
QUERY VIRTUAL	MMR-FW30	CMR-CM01
QUIT	MMR-FW20	CMR-FE01
R	MMR-FW20	No equivalent
RADD	MMR-FW30	DYR-TE00
READ	MMR-FW20	CMR-FE01
RECONCILE	MMR-FW30	DYR-TE00
REDUCE	MMR-FW30 or MMR-FW20	DYR-TE00 or CMR-UD05
REF	MMR-FW20	No equivalent
REFA	MMR-FW20	No equivalent
REFERENCES	MMR-FW20	No equivalent
REINSTATE	MMR-FW30	CMR-CM01
RELEASE	MMR-FW30 or MMR-FW20	DYR-TE00 or CMR-UD05
RELINQUISH	MMR-FW30 or MMR-FW20	DYR-TE00 or CMR-UD05
REMOVE	MMR-FW30	CMR-CM01
RENAME	MMR-PF61	
REPLACE	MMR-FW30	CMR-CM01
REPORT	MMR-FW30	CMR-CM01
ALL-STATUSES	MMR-FN30	CMR-DD2 or CMR-AD21
REPORT data modeling and design	MMR-FN24	DSR-DS01
USING FORMAT	MMR-FN24	DSR-UD30
REPSTR	MMR-FW30 or MMR-FW20	DYR-TE00 or CMR-UD05

Name	FU Code(s)	SU Code(s)
RESERVE	MMR-FW30 or MMR-FW20	DYR-TE00 or CMR-UD05
RESTART	MMR-FW30	CMR-CM01
RETAIN	MMR-FW30 or MMR-FW20	DYR-TE00 or CMR-UD05
RETRACE	MMR-FW30	CMR-CM01
RETURN command	MMR-FW30	CMR-CM01
RETURN directive	MMR-FW30 or MMR-FW20	DYR-TE00 or CMR-UD05
REVERSE	MMR-FW30 or MMR-FW20	DYR-TE00 or CMR-UD05
REVERT	MMR-FN30	CMR-AD21 or CMR-DD2
RFILE	MMR-FW20	CMR-FE01
RIGHT command	MMR-FW30	CMR-CM01
RIGHT function	MMR-FW30 or MMR-FW20	DYR-TE00 or CMR-UD05
RIGN	MMR-FW30	DYR-TE00
ROOT	MMR-FW30 or MMR-FW20	DYR-TE00 or CMR-UD05
RREN	MMR-FW30	DYR-TE00
RREP	MMR-FW30	DYR-TE00
RUN	MMR-FW20	CMR-FE01
RUPD	MMR-FW30	DYR-TE00
S	MMR-FW20	CMR-FE01
SAY	MMR-FW30 or MMR-FW20	DYR-TE00 or CMR-UD05
SEARCH	MMR-FW30 or MMR-FW20	DYR-TE00 or CMR-UD05
SELECT	MMR-FW30	CMR-CM01
SENDF	MMR-FW30	DYR-TE00
SET directive	MMR-FW30 or MMR-FW20	DYR-TE00 or CMR-UD05
SET ALERT	MMR-FW20	CMR-FE01
SET AUTOSKIP	MMR-FW20	CMR-UD05

Name	FU Code(s)	SU Code(s)
SET BLANK-LINE-DISPLAY	MMR-FW30	CMR-CM01
SET BROWSE-EDIT	MMR-FW20	CMR-UD05
SET BROWSE-RETENTION	MMR-FW20	CMR-UD05
SET CHECK-CHARACTER	MMR-FW30	CMR-CM01
SET COMMAND-LINE	MMR-FW30	CMR-CM01
SET COMMAND-RETENTION	MMR-FW30	CMR-CM01
SET COUNTER	MMR-FW30	CMR-CM01
SET CURSOR-HOLD	MMR-FW30	CMR-CM01
SET DIAGNOSTIC-DUMP	MMR-FW30	CMR-CM01
SET DIRECTLY-ASSUMPTION	MMR-FW30	CMR-CM01
SET DOCUWARE	MMR-FW30	CMR-CM01
SET ECHO	MMR-FW30	CMR-CM01
SET ENQUEUE-TRACE	MMR-FW30	CMR-CM01
SET ENTER-KEY	MMR-FW30	CMR-CM01
SET ESCAPE-CHARACTER	MMR-FW30	CMR-CM01
SET EXCP-MONITOR	MMR-FW20	CMR-FE01
SET EXEC-WRITE	MMR-FW20	CMR-UD05
SET EXECUTIVE-RETENTION	MMR-FW30	CMR-CM01
SET FORMAT	MMR-FW30	CMR-CM01
GENERIC	MMR-FW20	CMR-UD1
TO	No equivalent	CMR-UD15
SET FORMAT-TITLE	No equivalent	DYR-UD15
SET INFOBANK-SELECT	MMR-FW30	CMR-CM01
SET LA-RETENTION	MMR-FW20	CMR-UD05
SET LINE-AREA	MMR-FW30	CMR-CM01
SET LINE-END-CHARACTER	MMR-FW30	CMR-CM01

Name	FU Code(s)	SU Code(s)
SET LINEAR-RETENTION	MMR-FW20	CMR-UD05
SET LIST-SHIFT	MMR-FW30	CMR-CM01
SET LOOKASIDE-RETENTION	MMR-FW20	CMR-FE01
SET NUMBERS	MMR-FW20	CMR-FE01
SET OUPUT-EDIT	MMR-FW20	CMR-UD05
SET PAGE-HEADINGS	MMR-FW30	CMR-CM01
SET PAGE-LENGTH	MMR-FW30	CMR-CM01
SET PERFORM-CHARACTER	MMR-FW30	CMR-CM01
SET PFn	MMR-FW30	CMR-CM01
SET PREFIX-AREA	MMR-FW30	CMR-CM01
SET PRINT-DELIMITERS	MMR-FW30	CMR-CM01
SET PRINT-SHIFT	MMR-FW30	CMR-CM01
SET REVISION-BARS	MMR-FW30	CMR-CM01
SET SCALE	MMR-FW30	CMR-CM01
SET SCREEN-REFRESH	MMR-FW20	CMR-FE01
SET SCROLL-LIMIT	MMR-FW20	CMR-FE01
SET SOS-DUMP	MMR-FW30	CMR-CM01
SET SPACE-LINE-DIPLAY	MMR-FW30	CMR-CM01
SET SUBSTITUTION-CHARACTER	MMR-FW30	CMR-CM01
SET TAB-CHARACTER	MMR-FW20	CMR-FE01
SET TABS	MMR-FW20	CMR-FE01
SET TRANSLATION	No equivalent	DYR-UD15
SET UPDATE-OUTPUT	MMR-FW20	CMR-FE01
SET UPPER-CASE	MMR-FW30	CMR-CM01
SET VERIFY	MMR-FW30	CMR-CM01
SFILE	MMR-FW20	CMR-FE01
SHOW ALIAS-TYPES	MMR-FW30	CMR-CM01
SHOW MEMBER-TYPE	MMR-FW30	CMR-CM01

Name	FU Code(s)	SU Code(s)
SHOW PRODUCE-OPTIONS	MMR-FW30	CMR-CM01
SHOW UDR	MMR-FW30	CMR-CM01
SHOW UDS	MMR-FW30	CMR-CM01
SIGNAL	MMR-FW30 or MMR-FW20	DYR-TE00 or CMR-UD05
SKIP	MMR-FW30	CMR-CM01
SMOVE	MMR-FW20	CMR-FE01
SNAPSHOT	MMR-FN24	DSR-DS01
SORT	MMR-FW20	CMR-FE01
SOURCE-FILE	MMR-FW20	CMR-FE01
SPACE	MMR-FW30	CMR-CM01
SQL ACQUIRE	MMR-FN27	DYR-TE32
SQL ALTER	MMR-FN27	DYR-TE32
SQL COMMENT	MMR-FN27	DYR-TE32
SQL CREATE	MMR-FN27	DYR-TE32
SQL DROP	MMR-FN27	DYR-TE32
SQL GRANT	MMR-FN27	DYR-TE32
SQL LABEL	MMR-FN27	DYR-TE32
SQL LIST CYCLES	MMR-FN24	DSR-PH01
SQL LIST TABLES	MMR-FN24	DSR-PH01
SQL PLOT CLUSTER	MMR-FN24	DSR-PH01
SQL PLOT REFERENTIAL STRUCTURES	MMR-FN24	DSR-PH01
SQL POPULATE	MMR-FN24	DSR-PH01
USING FORMAT	MMR-FN24	DSR-UD30
SQL PREVIEW	MMR-FN24	DSR-PH01
USING FORMAT	MMR-FN24	DSR-UD30
SQL PRODUCE	MMR-FN27	DYR-TE32
SQL REPORT	MMR-FN24	DSR-PH01
USING FORMAT	MMR-FN24	DSR-UD30
SQL REVOKE	MMR-FN27	DYR-TE32

Name	FU Code(s)	SU Code(s)
SQL SIZE	MMR-FN27	DYR-TE32
SQL SYNONYM	MMR-FN27	DYR-TE32
SS	MMR-FW20	CMR-FE01
STACK	MMR-FW30 or MMR-FW20	DYR-TE00 or CMR-UD05
STATUS	MMR-FN30	CMR-AD21 or CMR-DD2
STATUS LIST	MMR-FN30	CMR-AD21 or CMR-DD2
STATUS WINDOW	MMR-FN30	CMR-AD21
STORE KEPT-DATA	MMR-FW30	CMR-CM01
STORE WORKBENCH-DESIGN-AREA	MMR-FN24	DSR-DS01
STRIP	MMR-FW30 or MMR-FW20	DYR-TE00 or CMR-UD05
SUBSTR	MMR-FW30 or MMR-FW20	DYR-TE00 or CMR-UD05
SWITCH MESSAGES	MMR-FW30	CMR-CM01
SWITCH NAME-CONCATENATION	MMR-FW30	CMR-CM01
SWITCH OUTPUT	MMR-FW30	CMR-CM01
TEXEC	MMR-FW30	DYR-TE00
TEXT	MMR-FW30	CMR-CM01
TOP	MMR-FW30	CMR-CM01
TRACE	MMR-FW30 or MMR-FW20	DYR-TE00 or CMR-UD05
TRANSFER command	MMR-FW30	DYR-DY01
TRANSFER directive	MMR-FW30 or MMR-FW20	DYR-TE00 or CMR-UD05
TRANSIENT-EXECUTIVE	MMR-FW30	DYR-TE00
TRANSLAT function	MMR-FW30 or MMR-FW20	DYR-TE00 or CMR-UD05
TRANSLATE	MMR-FW30	DYR-DY01
IDD	No equivalent	DYR-TE08
IDMS	No equivalent	DYR-TE08
OTHER-DICTIONARY	MMR-FW30	DYR-TE00

Name	FU Code(s)	SU Code(s)
TSS	MMR-FW20	No equivalent
TYPE function	MMR-FW30 or MMR-FW20	DYR-TE00 or CMR-UD05
UP	MMR-FW20	CMR-FE01
UPDATE	MMR-FW20	CMR-FE01
UPPER function	MMR-FW30 or MMR-FW20	DYR-TE00 or CMR-UD05
US	MMR-PF61	No equivalent
USA	MMR-PF61	No equivalent
USAGE	MMR-PF61	one
USR	MMR-PF61	No equivalent
VALIDATE	MMR-PF61	No equivalent
VALUE function	MMR-FW30 or MMR-FW20	DYR-TE00 or CMR-UD05
VLIST directive	MMR-FW30 or MMR-FW20	DYR-TE00 or CMR-UD05
WAL	MMR-PF61	No equivalent
WBDA	MMR-FN24	DSR-DS01
WF	MMR-PF61	No equivalent
WHAT	MMR-PF61	DMR-DD1
BELONGS-TO	MMR-FW30	DMR-DD3
FATHERS	MMR-FN24	DMR-DD5
FATHERED-BY	MMR-FN24	DMR-DD5
GENERATES	MMR-FN24	DMR-DD5
GENERATED-BY	MMR-FN24	DMR-DD5
RELATED	MMR-PF61	No equivalent
WHICH	MMR-PF61	DMR-DD1
AMENDED	MMR-FN30	CMR-DD2 or CMR-AD21
BELONGS-TO	MMR-FW30	CMR-DD3
CHANGED	MMR-FN30	CMR-DD2 or CMR-AD21
CHECK-NEEDED	MMR-PF61	No equivalent
CHECK-OK	MMR-PF61	No equivalent
CURRENT	MMR-FN30	CMR-DD2 or CMR-AD21

Name	FU Code(s)	SU Code(s)
DIVERGING	MMR-FN30	CMR-DD2 or CMR-AD21
FATHERS	MMR-FN24 or MMR-FW25	DMR-DD5
FATHERED-BY	MMR-FN24 or MMR-FW25	DMR-DD5
GENERATES	MMR-FN24 or MMR-FW25	DMR-DD5
GENERATED-BY	MMR-FN24 or MMR-FW25	DMR-DD5
GENERIC	MMR-FW20	CMR-UD1
LOCKED	MMR-FW30	CMR-WS01
NEW	MMR-FN30	CMR-DD2 or CMR-AD21
UNVERIFIED	MMR-FN30	CMR-DD2 or CMR-AD21
RELATED	MMR-PF61	No equivalent
REVERIFIED	MMR-FN30	CMR-DD2 or CMR-AD21
WHO	MMR-FW30	CMR-DD3
WHOSE	MMR-PF61	DMR-DD1
WIPE	MMR-FW20	CMR-FE01
WORD	MMR-FW30 or MMR-FW20	DYR-TE00 or CMR-UD05
WORDINDX	MMR-FW30 or MMR-FW20	DYR-TE00 or CMR-UD05
WORDLEN	MMR-FW30 or MMR-FW20	DYR-TE00 or CMR-UD05
WORDS	MMR-FW30 or MMR-FW20	DYR-TE00 or CMR-UD05
WRITE	MMR-FW20	CMR-FE01
WRITEF	MMR-FW30 or MMR-FW20	DYR-TE00 or CMR-UD05
WRITEL	MMR-FW30 or MMR-FW20	DYR-TE00 or CMR-UD05
XQUIT	MMR-FW20	CMR-FE01
ZONE	MMR-FW20	CMR-FE01