ULTRAOPT™
General Information

MAINVIEW® for VTAM
ULTRAOPT™/CICS
ULTRAOPT™/IMS

Version 4.2

October 18, 2002

bmcsoftware

Copyright 1984–2002 BMC Software, Inc., as an unpublished work. All rights reserved.

BMC Software, the BMC Software logos, and all other BMC Software product or service names are registered trademarks or trademarks of BMC Software, Inc. IBM is registered trademark of International Business Machines Corp. All other registered trademarks or trademarks belong to their respective companies.

ULTRAOPT™ technology holds the following U.S. Patent Numbers: 4,750,137; 4,837,679; 5,005,137; 5,046,025; 5,113,354; 5,122,949; 5,432,901; 5,566,334; and 5,892,907.

THE USE AND CONTENTS OF THIS DOCUMENTATION ARE GOVERNED BY THE SOFTWARE LICENSE AGREEMENT ENCLOSED AT THE BACK OF THIS DOCUMENTATION.

Restricted Rights Legend

U.S. Government Restricted Rights to Computer Software. UNPUBLISHED -- RIGHTS RESERVED UNDER THE COPYRIGHT LAWS OF THE UNITED STATES. Use, duplication, or disclosure of any data and computer software by the U.S. Government is subject to restrictions, as applicable, set forth in FAR Section 52.227-14, DFARS 252.227-7013, DFARS 252.227-7014, DFARS 252.227-7015, and DFARS 252.227-7025, as amended from time to time. Contractor/Manufacturer is BMC Software, Inc., 2101 CityWest Blvd., Houston, TX 77042-2827, USA. Any contract notices should be sent to this address.

Contacting BMC Software

You can access the BMC Software Web site at **http://www.bmc.com**. From this Web site, you can obtain information about the company, its products, corporate offices, special events, and career opportunities.

United States and Canada

Address BMC Software, Inc.
2101 CityWest Blvd.
Houston TX 77042-2827

Telephone 713 918 8800 or
800 841 2031

Fax 713 918 8000

Outside United States and Canada

Telephone (01) 713 918 8800

Fax (01) 713 918 8000

Customer Support

You can obtain technical support by using the Support page on the BMC Software Web site or by contacting Customer Support by telephone or e-mail. To expedite your inquiry, please see “Before Contacting BMC Software.”

Support Web Site

You can obtain technical support from BMC Software 24 hours a day, 7 days a week at **http://www.bmc.com/support.html**. From this Web site, you can

- read overviews about support services and programs that BMC Software offers
- find the most current information about BMC Software products
- search a database for problems similar to yours and possible solutions
- order or download product documentation
- report a problem or ask a question
- subscribe to receive e-mail notices when new product versions are released
- find worldwide BMC Software support center locations and contact information, including e-mail addresses, fax numbers, and telephone numbers

Support by Telephone or E-mail

In the United States and Canada, if you need technical support and do not have access to the Web, call 800 537 1813. Outside the United States and Canada, please contact your local support center for assistance. To find telephone and e-mail contact information for the BMC Software support center that services your location, refer to the Contact Customer Support section of the Support page on the BMC Software Web site at **www.bmc.com/support.html**.

Before Contacting BMC Software

Before you contact BMC Software, have the following information available so that Customer Support can begin working on your problem immediately:

- product information
  - product name
  - product version (release number)
  - license number and password (trial or permanent)
- operating system and environment information
  - machine type
  - operating system type, version, and service pack or other maintenance level such as PUT or PTF
  - system hardware configuration
  - serial numbers
  - related software (database, application, and communication) including type, version, and service pack or maintenance level
- sequence of events leading to the problem
- commands and options that you used
- messages received (and the time and date that you received them)
  - product error messages
  - messages from the operating system, such as `file system full`
  - messages from related software

Contents

About This Book xi

Introduction 1
Reducing the Length of Data Streams 2
Data Streams 3
Types of Data Streams 4
How a Host Application Creates Data Streams 4
Factors Affecting Remote Transmission Speed 6
When the Data Stream Reaches the Host Application 7
Most Important Factor in Remote Transmissions 8
How Data Streams Are Transmitted to Local Terminals 8

Features of ULTRAOPT 9
TN3270 Feature 9
Bypass Send and Receive 10
Using a Session Manager 10
Response Time Monitoring 12
Using Response Time Monitoring 13
Local Format Storage 13
How Is Local Format Storage Used? 13

Benefits of Using ULTRAOPT 17
Improved Response Time 17
Reduced Load on NCP 19
Reduced Load on VTAM 19
Reduced Communications Equipment Costs 19
Improved Terminal User Productivity 20
Reduced Terminal User Fatigue 20
Increased Transmission Security 21
Improved Session Manager Performance 21

Cost Justifications 23
Improved Response Time 23
Delayed Hardware Upgrades. 25
Reduced Costs of Existing Hardware 26
Decreased Satellite Transmission Costs 27
Increased Programmer Productivity 27
Other Ways to Reduce Your Network Cost. 28

How ULTRAOPT Works 29
Optimizer Component 29
Optimizer Design Objectives 30
Optimization and Compression Techniques 31
Monitor Component 34
Subsystem Menu. 35
ULTRAOPT Primary Menu 36
Optimization Control Menu 37
Data Stream Statistics Menu. 38
Data Stream Analysis Menu 38
Status Menu 39
Print or Reset Statistics Panel 39
Help Facility 39

Maximizing ULTRAOPT Effectiveness 41

How System Resources Are Affected 43
Application Programs 43
CPU Time 43
Hardware 43
System Programmers. 44
VTAM 44
Storage Requirements 45

Required Environments for ULTRAOPT. 47
ECSA Storage 47
Supported Devices. 48
Program Specifications 48

About BMC Software 49
Maintenance and Support 49
Extensive Testing Methods 50
30-Day-Plus Free Trial 50

Index 51

Figures

Figure 1 Subsystem Communication without ULTRAOPT Products 11
Figure 2 Subsystem Communication with ULTRAOPT and BSR 12
Figure 3 Sample Host Application Environment 15
Figure 4 Optimization Control Menu (1.0.0) 37

Tables

Table 1 Calculating Savings from Decreased Terminal Time 24
Table 2 Cost of Upgrading from 56K to T1 26
Table 3 Savings Realized by Changing from T1 to 56K 27
Table 4 Data Stream Statistics Menu Options 38
Table 5 Data Stream Analysis Menu Options 38
Table 6 Status Menu Options 39

About This Book

This book contains detailed information about the ULTRAOPT/CICS and ULTRAOPT/IMS optimization products and is intended for system programmers and other computer personnel.

In this book, ULTRAOPT/CICS and ULTRAOPT/IMS are referred to as *ULTRAOPT*, except where a distinction is required.

To use this book, you should be familiar with the following items:

- Multiple Virtual Storage (MVS) systems
- job control language (JCL)
- Interactive System Productivity Facility (ISPF)

For example, you should know how to respond to ISPF panels and how to perform common actions in a window environment (such as choosing menu items and resizing windows).

How This Book Is Organized

This book is organized as follows:

Section	Description
“Introduction”	provides an overview of what ULTRAOPT does and why BMC Software developed it
“Features of ULTRAOPT”	explains the features of ULTRAOPT
“Benefits of Using ULTRAOPT”	describes the benefits of ULTRAOPT
“Cost Justifications”	provides methods for justifying use of ULTRAOPT at your site
“How ULTRAOPT Works”	explains how optimization works
“Maximizing ULTRAOPT Effectiveness”	explains how you can best use ULTRAOPT products
“How System Resources Are Affected”	explains the effects of ULTRAOPT on your system resources
“Required Environments for ULTRAOPT”	provides the operating system requirements and the ULTRAOPT program specifications
“About BMC Software”	provides information about BMC Software and how ULTRAOPT products are distributed

In addition, an index appears at the end of the book.

Related Documentation

BMC Software products are supported by several types of documentation:

- online and printed books
- online Help
- release notes and other notices

In addition to this book and the online Help, you can find useful information in the publications listed in the following table. As “Online and Printed Books” explains, these publications are available on request from BMC Software.

Category	Document	Description
installation documents	*OS/390 and z/OS Installer Guide*	provides information about installing ULTRAOPT by using the OS/390 and z/OS Installer
	ULTRAOPT Customization Guide	provides installation planning information, instructions for setup and testing, and instructions for customizing ULTRAOPT
core documents	*BMC Software Subsystem User Guide*	provides information about the operation, implementation, and messages that are issued by the BMC Software Subsystems
	ULTRAOPT User Guide	provides information for using ULTRAOPT at your data center
	ULTRAOPT Messages Manual	provides a list of messages you can receive while using ULTRAOPT
supplemental documents	release notes, technical bulletins, flashes	provide current information about ULTRAOPT

Online and Printed Books

The books that accompany BMC Software products are available in online format and printed format. If you are a Windows or Unix user, you can view online books with Acrobat Reader from Adobe Systems. The reader is provided at no cost, as explained in “To Access Online Books.” You can also obtain additional printed books from BMC Software, as explained in “To Request Additional Printed Books.”

To Access Online Books

Online books are formatted as Portable Document Format (PDF) files. You can view them, print them, or copy them to your computer by using Acrobat Reader 3.0 or later.You can access online books from the documentation compact disc (CD) that accompanies your product or from the World Wide Web.

In some cases, installation of Acrobat Reader and downloading the online books is an optional part of the product-installation process. For information about downloading the free reader from the Web, go to the Adobe Systems site at **http://www.adobe.com**.

To view any online book that BMC Software offers, visit the support page of the BMC Software Web site at **http://www.bmc.com/support.html**. Log on and select a product to access the related documentation. (To log on, first time users can request a user name and password either by registering at the support page or by contacting a BMC Software sales representative.)

To Request Additional Printed Books

BMC Software provides printed books with your product order. To request additional books, go to **http://www.bmc.com/support.html**.

Online Help

ULTRAOPT includes online Help. In the ULTRAOPT ISPF interface, you can access Help by pressing **F1** from any ISPF panel.

Release Notes and Other Notices

Printed release notes accompany each BMC Software product. Release notes provide current information such as

- updates to the installation instructions
- last-minute product information

In addition, BMC Software sometimes provides updated product information between releases (in the form of a flash or a technical bulletin, for example). The latest versions of the release notes and other notices are available on the Web at **http://www.bmc.com/support.html**.

Conventions

This book uses the following general conventions:

Item	Example
information that you are instructed to type	Type **SEARCH DB** in the designated field.
specific (standard) keyboard key names	Press **Enter**.
field names, text on a panel	Type the appropriate entry in the **Command** field.
directories, file names, Web addresses	The BMC Software home page is at **www.bmc.com**.
nonspecific key names, option names	Use the HELP function key. KEEPDICTIONARY option
MVS calls, commands, control statements, keywords, parameters, reserved words	Use the SEARCH command to find a particular object.

code examples, syntax statements, system messages, screen text	`//STEPLIB DD`
	
	`The table` *`table_name`* `is not available.`

emphasized words, new terms, variables	The instructions that you give to the software are called *commands*. In this message, the variable *file_name* represents the file that caused the error.

This book uses the following types of special text:

Note: Notes contain important information that you should consider.

Warning! Warnings alert you to situations that could cause problems, such as loss of data, if you do not follow instructions carefully.

Introduction

ULTRAOPT/CICS and ULTRAOPT/IMS provide the ultimate data stream optimization solutions for VTAM-based communications subsystems such as CICS, IMS, TSO, TN3270, and session managers.

ULTRAOPT products reduce *outbound* Virtual Telecommunications Access Method (VTAM) data streams for 3270 terminals and Systems Network Architecture character string (SCS) printers by as much as 95 percent, with an average of 40 to 90 percent. They reduce *inbound* VTAM data streams by as much as 90 percent, with an average of 30 to 90 percent.

ULTRAOPT products also compress outbound SNA data streams for 3600/4700 controllers and 3790 devices with decompression capability. The amount of compression can be as high as 45 percent, with an average of 20 to 40 percent.

This reduction means less demand on the network, resulting in improved response times, better network utilization, and lower costs. ULTRAOPT products provide the following optimization solutions:

- a single optimization product, eliminating the need to install and maintain optimization products for each application and control region

  This feature reduces central processing unit (CPU) overhead.

- ability to store screen formats in enabled IBM 3174 control units, further reducing data stream transfers

- optimization benefits for any subsystem (ULTRAOPT/CICS optimizes everything except IMS, and ULTRAOPT/IMS optimizes everything except CICS)

  The combination of ULTRAOPT/CICS and ULTRAOPT/IMS provides a single architecture for total 3270 optimization across the enterprise.

ULTRAOPT also functions as a data collector for the BMC Software MAINVIEW for VTAM product. ULTRAOPT collects application performance data. The data is displayed on the MAINVIEW console. MAINVIEW for VTAM provides a way to monitor OS/390 and z/OS mission-critical application performance.

Note: A license is required to use MAINVIEW for VTAM functionality. For information about using MAINVIEW for VTAM, see the *MAINVIEW for VTAM User Guide*. For information about obtaining a license for MAINVIEW for VTAM, contact your sales representative.

Reducing the Length of Data Streams

The path that your information follows from a *remote* terminal to a host application (such as Customer Information Control System [CICS]) and back again is complex. The most important factor that determines speed and efficiency is the amount of information that must be transmitted. Transmitting more information increases response time.

ULTRAOPT can *substantially* reduce your response time and increase the efficiency of the system that transmits your information.

ULTRAOPT can also increase the level of employee and customer satisfaction associated with your communications network because of the methods used to produce these results. Faster response times will please banking customers, insurance agents, inventory clerks, and others. If you have remote offices, improved response time can boost morale by giving your customers and employees the feeling that they are more closely attached to your corporate headquarters and that they are an important part of your business.

This section describes how information is transmitted and how ULTRAOPT products can improve productivity and reduce network cost.

Data Streams

Information is transferred in a unit referred to as a data stream. A data stream contains your information plus *control data* that is used by the software and by hardware which processes the data stream.

A data stream contains the following control data:

- orders

  These one-byte fields are instructions that define the data following the orders. Orders are instructions that give directions on how a data stream is processed.

- addresses

  These two-byte fields indicate the locations where your information is placed on a display screen or printed page.

- attribute bytes

  These fields are variable-length bytes that precede your information. Attribute bytes define the characteristics of the information such as intensity, protection, visibility, color, and blinking.

Types of Data Streams

An *outbound* data stream is a collection of characters containing the following data:

- information that is displayed on a terminal or printed on a printer

  This information consists of headers (such as an account number) that are the same from screen to screen and variable data that the application program extracts from a file or database.

- control data

  Control data is often created by a screen management facility (such as basic mapping support [BMS] in CICS) so programmers do not need to be involved with data streams at the byte level.

An *inbound* data stream is a collection of characters containing the following data:

- data that the terminal user types in and possibly data that the application program marks as inbound data

  Marked data is information that the program requires returned in the data stream (usually called premodified data).

- control data

  Control data is often created by a screen management facility (such as BMS in CICS) so programmers do not need to be involved with data streams at the byte level.

How a Host Application Creates Data Streams

Application programs often create a data stream by sequentially building each piece of the data stream. They build one instruction set (for example, order, buffer address, attribute byte, and user information) then another, until all required information has been processed. The applications usually must create the data stream with no prior knowledge of what was transmitted.

ULTRAOPT rebuilds the application data streams into shorter data streams that function the same way.

Example 1

If an application program must blank out a line on an IBM 3270 display screen, it will probably insert 80 blanks in the data stream.

ULTRAOPT rewrites this data stream by using a repeat-to-address (RA) order. When an RA order is processed, the hardware repeats the blank until the end, which is indicated by a target address. The RA order, the target address, and the character to be repeated use 4 bytes in the data stream rather than the original 80 bytes.

This is a simple example of data stream optimization. ULTRAOPT uses many other standard IBM 3270 instructions to reduce the number of bytes that are transmitted and still produce the desired display or printout.

Example 2

The application must first erase the screen because most application programs do not know what a terminal operator may have previously displayed on the screen. This erasure causes the screen to blink. The new data stream is displayed on the screen.

If the application-created data stream is displayed in ascending order, the data is displayed from top to bottom. If the data is not displayed in ascending order, the data is displayed in a random order. In either case, most employees and customers find the screen-blink distracting and annoying. Their concentration is broken because the information that they were viewing disappears.

ULTRAOPT remembers what is displayed on a screen. It is not necessary to erase the screen and start over.

ULTRAOPT builds a data stream that contains only the *information which is required* to transform the existing screen into the new screen. With ULTRAOPT data stream management, the screen does not blink and the terminal operator’s concentration is not broken. Employees and customers rate ULTRAOPT high for increasing productivity and satisfaction with terminal interactions.

Factors Affecting Remote Transmission Speed

How quickly an inbound data stream is transmitted from a remote device depends on the following key factors:

- number of terminals that are attached to the control unit

  Attaching more terminals to a control unit slows down the response time that is required to process a data stream after the user presses **Enter**. A control unit at the remote end performs the following actions:

  — receives inbound data streams from the terminals and passes them to a modem

  — receives outbound data streams from a modem, processes the data streams according to instructions that are embedded in the control data, and routes the data streams to the correct terminal or printer

- size and speed of your 37*xx* communications controller

  There are many types and several vendors of 37*xx* communications controllers. These hardware devices are driven by your network control program (NCP).

- number of outbound data streams that are being transmitted

  Outbound data streams affect the processing of inbound data streams because outbound data streams have priority over inbound data streams.

- how quickly the modem can convert the data into a form that the telecommunications link accepts

  A modem is a device that receives inbound data streams from a control unit, converts the data streams, and passes them to the telecommunications link. Modem efficiency—where milliseconds are important—varies greatly, depending on the brand and speed.

- speed, type, length, and complexity of your communications link

  Your communications link can be a telephone line or a satellite. It could operate at 14.4 kilobits per second (Kbps), 28.8 Kbps, 56.6 Kbps, or another speed. The link may be one mile or hundreds of miles long, with many telecommunications carriers (for example, telephone companies) involved with the link.

- how your NCP parameters are set, and the amount of memory in your 37*xx* communications controller

  Many NCP parameters can be controlled by your data center. Many of them affect the speed at which data streams are transmitted (for example, BUFSIZE, PASSLIM, MAXOUT, PAUSE, and DELAY).

- size and speed of your CPU

- how your VTAM parameters are set

- number of line turnarounds

  Line turnaround is the procedure that a modem follows when it switches from transmitting data to receiving data and vice versa.

  The speed of a line turnaround depends on the type of modem that you are using. An average line turnaround speed is 50 milliseconds. Your modem vendor knows the speed of your modem.

- type of transmission path (for example, half-duplex or full-duplex)

  If your telecommunication link is half-duplex, data can either be transmitted or received at any one time.

  If your telecommunication link is full-duplex, data is transmitted and received at the same time. Full-duplex links are valid only for synchronous data link control (SDLC) protocol.

- type of telecommunications protocol

When the Data Stream Reaches the Host Application

When a data stream is received by the host application, it is scheduled (placed in a queue) for processing; then it must be processed. After processing, the new data stream is scheduled for transmission back to the terminal.

Most host applications are already well tuned, and internal application processing time is usually between 0.5 and 1.0 second.

Response time for a terminal user may actually be between 2.0 and 7.0 seconds. If you could eliminate the host processing time completely, response time would remain in the range 1.0 to 6.0 seconds.

Most Important Factor in Remote Transmissions

The most important factor that affects all remote transmission components is the amount of data that is transferred—inbound and outbound.

With just one terminal, if you reduce the amount of data that is transferred, the amount of time that the system takes to transmit a data stream is reduced.

This reduction is why BMC Software developed optimizer products and why your data center will benefit from using ULTRAOPT on remote terminals.

How Data Streams Are Transmitted to Local Terminals

The path that a data stream must travel from a local terminal or printer to a host application is much shorter and faster than from a remote terminal. Only the control unit and VTAM are involved.

ULTRAOPT products can affect your local terminals in the following ways:

- ULTRAOPT speeds the transmission of graphics data streams such as the IBM graphical display manager (GDDM) graphic displays.

- Optimization can improve response time by reducing the amount of data and orders that are processed by IBM 3174 control units.

  The 3174s are microcoded to allow for greater flexibility and lower cost; they are also slower than older, hard-wired control units and can benefit from optimization.

- Optimization of your local data streams can decrease remote response times by removing the VTAM bottleneck.

  If your data center has a large local data stream load and your telecommunications access method (such as VTAM) is limiting your transmission throughput, your local data streams can benefit from optimization.

Even if response time reduction were negligible, your employees and customers may perceive the elimination of screen blinking and screen erasure as a great benefit.

Features of ULTRAOPT

ULTRAOPT offers excellent features to enhance your optimization. This section describes the following important features that greatly affect your optimization performance and monitoring:

- TN3270 feature for accessing and displaying data on hosts
- Bypass Send and Receive (BSR) for improving response and reducing CPU time for application-to-application sessions
- Response Time Monitoring (RTM) for real-time monitoring of the host and network response times of most sessions to intercepted applications
- Local Format Storage (LFS) support for creating, loading, and managing formats maintained by LFS

TN3270 Feature

The TN3270 feature of ULTRAOPT lets end users who are using display terminals (connected to IP networks) access and display data on hosts. TN3270 bridges Internet Protocol (IP) and Systems Network Architecture (SNA) protocol.

TN3270 provides the following information:

- correlation of TN3270 LUs (IP addresses) to VTAM applications running on an MVS system
- mapping of TN3270 IP addresses to VTAM logical units (LUs) and resolving of IP addresses to specific domain names

- response time statistics for TN3270 LUs
- optimization statistics for TN3270 LUs or Applids

Note: For information about IP environments, see the *ULTRAOPT Customization Guide*. For information about using the TN3270 feature, see the *ULTRAOPT User Guide*.

To optimize TN3270 data, ULTRAOPT must intercept the first Transmission Control Protocol/Internet Protocol (TCP/IP) Telnet session.

Bypass Send and Receive

ULTRAOPT offers the BSR feature to greatly improve performance for application-to-application sessions within the same host. The BSR feature lets you bypass VTAM for all SENDs and RECEIVEs for sessions created by a CLSDST PASS or a REQSESS.

Although ULTRAOPT must use CPU time to accomplish this, the overall throughput (number of transactions processed per second) is typically greatly increased. On a per-transaction basis, CPU usage actually decreases because of the following reasons:

- VTAM does not have to execute SENDs and RECEIVEs under the address spaces of those applications.
- No optimization is necessary in the address spaces of the background applications.

Using a Session Manager

If your data center uses a session manager to access multiple applications (for example, IMS, various CICSs, or TSO) during a single terminal session, the ULTRAOPT BSR feature can significantly reduce the CPU cost per optimized message.

For example, a user logs on to a session manager and starts several background sessions with various applications. Each transaction requires three SENDs and three RECEIVEs.

1. The session manager receives a message from the terminal and issues a SEND to the application (for example, CICS).

2. CICS issues a RECEIVE then a SEND to the session manager.

3. The session manager issues a RECEIVE then a SEND to the terminal. See Figure 1.

Figure 1 Subsystem Communication without ULTRAOPT Products

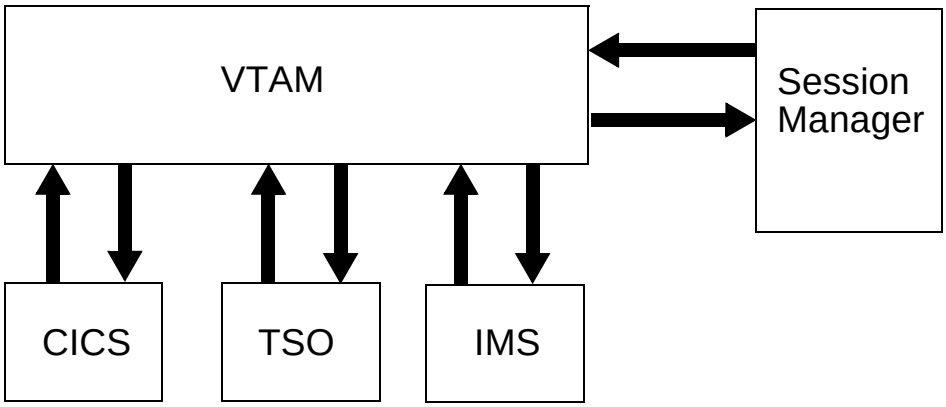

The ULTRAOPT BSR feature lets you shorten the very long path lengths of session managers by eliminating the SENDs and RECEIVEs between applications (Applids) in the same host. Figure 2 shows the subsystem communication path with ULTRAOPT and BSR.

Figure 2 Subsystem Communication with ULTRAOPT and BSR

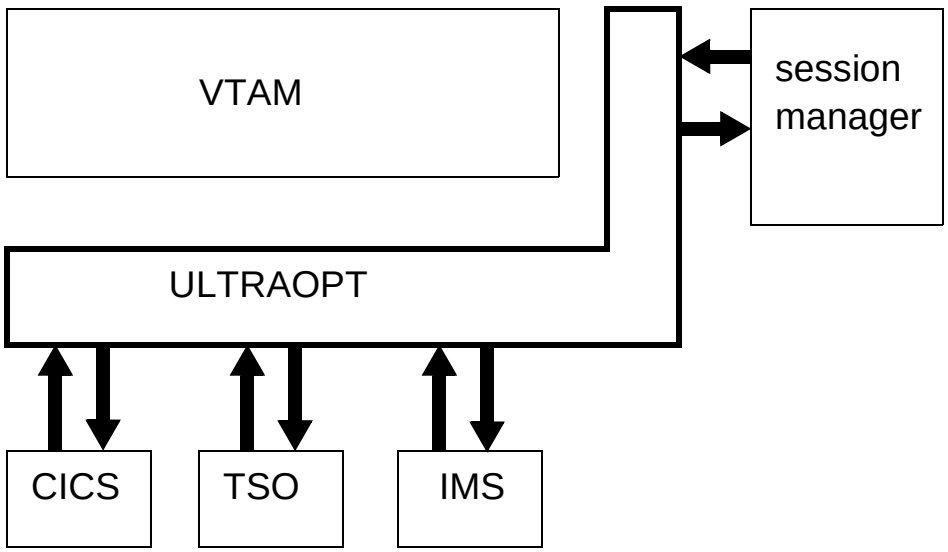

Response Time Monitoring

RTM is a feature that displays real-time response times for sessions being intercepted by ULTRAOPT. The ULTRAOPT Monitor displays statistics for both host and network response times either by application or by terminal. This feature lets you monitor the performance of ULTRAOPT in your environment.

Host response time is the amount of time taken by the application to process a transaction. To calculate host response time, ULTRAOPT will turn on definite response for the application. (Definite response is a VTAM function which specifies that traffic sent to the terminal be acknowledged.)

Network response time is the time required for the output of a transaction to travel through the network to the terminal plus the time it takes for the definite response to arrive back at the VTAM application. You can only monitor network response time for LU2 sessions and optimized LU0 and LU1 sessions.

To take advantage of Response Time Monitoring, the application must first be intercepted. The *UTLRAOPT User Guide* provides rules of interception. You can create include and exclude tables to identify which applications and devices you want to monitor.

Using Response Time Monitoring

Response time statistics can be used to monitor your system's performance, and are especially helpful in keeping track of your service level agreements. Statistics about response times include average and worst host and network times and average inbound and outbound traffic. Because ULTRAOPT sits at the VTAM level in your system, you can accomplish optimization *and* response time monitoring with only one product.

Local Format Storage

LFS is an addition to the architecture of the IBM 3174 Establishment Controller. LFS enables the controller to retain a reference copy of frequently used formats or presentation screens for programmed recall and display on the terminals attached to the controller. ULTRAOPT creates, loads, and efficiently manages the formats maintained by LFS, if the controllers are configured to support LFS.

How Is Local Format Storage Used?

The ULTRAOPT/CICS and ULTRAOPT/IMS implementation of LFS is similar to a cache memory. During normal application activity, a 3270 data stream representation of each format is transmitted to the IBM 3174 and stored in specially allocated LFS memory. If an end user requires the display of a format already stored in LFS memory, the format is retrieved, updated with any variable data, and quickly displayed on the user's terminal or PC. The stored formats are available to all control unit terminals (CUTs) attached to the controller. Distributed function terminals (DFTs) are not supported by LFS.

The host application is not required to resend the format to the controller for display on the user's terminal. The result is a significant decrease in network traffic, terminal response time, and host application turnaround time.

ULTRAOPT products implement LFS, the optimization of the formats, and the normal display of the formats on user terminals without requiring changes to your VTAM application programs. It is completely transparent to the terminal operator.

Figure 3 on page 15 shows a host application environment consisting of a host processor with a channel-attached front-end processor (FEP) that is remotely linked to two IBM 3174 Cluster Controllers supporting multiple user terminals and printers.

This environment can support users who execute one application (for example, insurance claims) that generates a limited number of distinct formats or a more complex environment that supports application users who access hundreds of different formats for each controller or server.

If the controllers are configured to support LFS, the ULTRAOPT product is designed to create, load, and efficiently manage the formats maintained by LFS. If you have Configuration Support B, microcode level 4.2, you can install the IBM request for price quotation (RPQ) 8Q1008 to get support for multiple hosts that are connected to one LFS 3174 controller.

Figure 3 Sample Host Application Environment

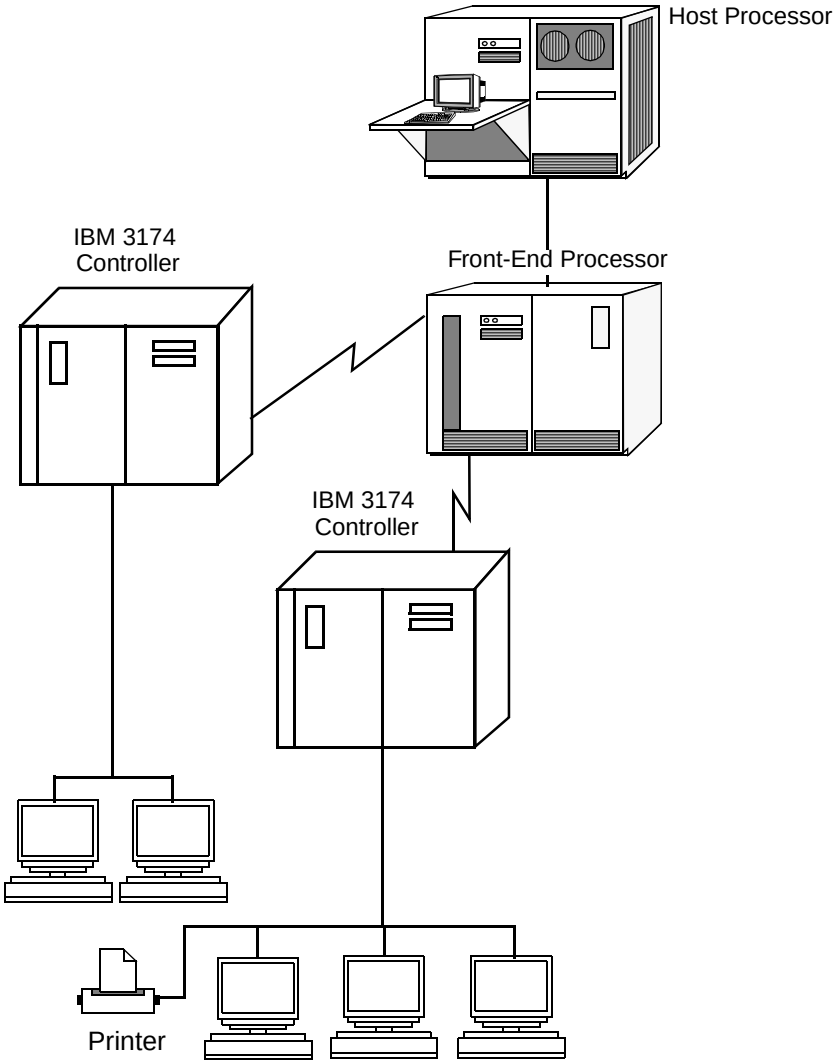

For more information about using Local Format Storage optimization, see the *ULTRAOPT Customization Guide*.

Benefits of Using ULTRAOPT

You can gain the following benefits from ULTRAOPT products:

- improved response time
- reduced line usage
- reduced NCP workload
- reduced telecommunication access method workload
- reduced telecommunication equipment costs
- improved employee productivity
- improved programmer productivity
- reduced terminal operator fatigue
- increased data transmission security
- bypassed VTAM for SENDs and RECEIVEs

Improved Response Time

ULTRAOPT products improve response time because of the following reasons:

- Fewer characters are transmitted.

  When a data stream is reduced, data stream transmission time is reduced. The host application (for example, CICS), the telecommunication access method (VTAM), the NCP, and the modems all have less work to do when fewer characters are transmitted. In addition, VTAM and the NCP require less storage to process a reduced data stream.

  Because smaller data streams take less time to transmit, the next data stream can be transmitted sooner on the same communication line. A *cumulative* effect is achieved. This effect is also noticed when transmitting input data, because the line becomes available for input transmission sooner.

Example

A data stream that is optimized by 30 percent, operating on a line which is used at 40 percent, will show a 50 percent reduction in line response time.

A data stream that is optimized by 80 percent, operating on a line which is used at 40 percent, will show a 90 percent reduction in line response time.

The results, when using ULTRAOPT products, are noticeable.

- The number of line turnarounds is reduced.

  ULTRAOPT reduces the length of outbound data streams and inbound data streams. It is more important to reduce inbound data streams than outbound streams because of the way inbound data is transmitted.

  Depending on the hardware, inbound data streams are transmitted in 256-byte or 512-byte blocks of data. The control unit sending the data cannot proceed until it has determined that the previous block was received.

  VTAM must acknowledge to the control unit that each block was received. For half-duplex lines or multidrop full-duplex lines, one or more line turnarounds will occur. A line turnaround increases response time.

  The number of line turnarounds can be reduced by reducing the amount of input data, which reduces the number of blocks and decreases response time.

  In the past, most data centers did not optimize data streams belonging to local terminals. Your data center should evaluate the use of ULTRAOPT with local terminals. In most cases, the terminal operators at your local terminals will notice faster response time.

  If your data center uses the IBM GDDM or any other online applications that use programmed symbols or vector graphics, your terminal operators will notice the response time difference.

Reduced Load on NCP

With smaller data streams to process, your NCP has less work to process. In heavily loaded networks, you gain the following benefits:

- faster response time
- fewer NCP buffers are used
- fewer NCP cycles are used

Reduced Load on VTAM

VTAM has less work to process when data streams are shorter. VTAM uses less buffer space (especially with BSR). The amount of storage that is used and line use is also reduced.

Reduced Communications Equipment Costs

Reducing the amount of data transmitted will have a cumulative effect on your telecommunications hardware. The following components are favorably affected:

- communication lines

  Load reduction can result in better use of your existing communication lines. Costs are reduced for the following reasons:

  — installed new lines at lower line speeds

  — reduced need for new lines because more terminals can be added to existing lines

  — extended existing lines to other sites

- satellite transmission facilities

  The speed and cost of satellite transmission—including X.25 and packet-switching—are sensitive to the amount of data transmitted. The ability of ULTRAOPT to significantly reduce data stream lengths is readily apparent in this environment. If cost is determined by the number of characters transmitted, ULTRAOPT reduces your transmission costs.

- modems

  The cost of modems is usually a function of the speed at which they operate. The faster the transmission speed, the higher the cost. With less data to transmit, lower-speed modems can be used—reducing the cost.

- control units

  More terminals can be added to existing lines, reducing the need for additional control units.

- 37*xx* communications controller

  With the continuing growth of most telecommunication networks, many data centers must continually upgrade their communication controllers. Because less data is transmitted when you use ULTRAOPT, the amount of data that the 37*xx* communications controllers must handle decreases. Consequently, it takes longer before an upgrade is necessary.

Improved Terminal User Productivity

ULTRAOPT can improve terminal user productivity and effectiveness by speeding up terminal response time. The time spent at a terminal is also decreased. This improvement lets more people use a terminal, decreasing the requirement for more terminals.

Reduced Terminal User Fatigue

With most applications, the screen blinks and the screen is erased and refreshed. This blinking is distracting and increases eye fatigue.

Erasing the existing data before displaying the new data is not necessary because ULTRAOPT uses the information that is already on the screen. This use of existing information helps reduce the fatigue that is so often associated with terminal operation and yields more productive employees.

Increased Transmission Security

ULTRAOPT transmits only changed data. The resulting data streams are *very* abbreviated, making it difficult for anyone to determine what a terminal screen is displaying.

Improved Session Manager Performance

Session managers can be a great productivity tool for your terminal users, but they consume a significant amount of CPU time when used with optimizers. You can significantly improve optimized session manager performance on your systems by using the ULTRAOPT BSR feature. BSR sessions are not optimized because there is no need to optimize data that never leaves the system.

Cost Justifications

The most frequently used justifications for using ULTRAOPT/CICS and ULTRAOPT/IMS include the following reasons:

- improved response time
- delayed upgrades/purchases of new telecommunications hardware
- reduced costs of existing telecommunications hardware
- decreased satellite transmission costs
- increased programmer productivity

Improved Response Time

Faster response time can provide the following results:

- Customer satisfaction levels are increased.
- Customer requests are processed faster.
- Terminal operator productivity is improved.
- The amount of work that is processed is increased.

To calculate the savings for decreased terminal operator time in your data center, use the example in Table 1 as a guide.

The calculations in Table 1 show one way that the time saved by ULTRAOPT can be translated into savings. The example shows the time that is saved per transaction per day. The calculations are based on a terminal operator cost of US$10 per hour.

Table 1 Calculating Savings from Decreased Terminal Time

Step	Formula	Description
1	25,000 × 2 _____ 50,000	transactions per day seconds saved per transaction seconds saved per day
2	50,000 ³ 3600 _____ 13.9	seconds saved per day seconds saved per hour hours saved per day
3	13.9 × $10 _____ $139	hours saved per day hourly cost of a terminal operator amount saved per day
4	$139 × 21 ____ $2,919	amount saved per day work days per month amount saved per month
5	$2,919 × 12 _____ $35,028	amount saved per month months per year amount saved per year

Delayed Hardware Upgrades

ULTRAOPT reduces the number of characters that are transmitted by your telecommunications equipment. If your system is nearing maximum capacity, this reduction provides a cushion for future growth or lets you satisfy demands not previously met. If your system is not at maximum capacity, this reduction can increase the amount of reserve capacity.

The reduction in data stream sizes affects the following hardware:

- communication lines
- 3270 control units
- telecommunications modems
- 37*xx* communications controller

With a reduction in hardware workload, your data center could achieve the following improvements:

- add more terminals to your existing telecommunication lines
- delay (or even cancel) the upgrades of existing lines, modems, and 37*xx* controllers
- delay (or even cancel) new telecommunication lines, modems, and control units
- multidrop an existing telecommunication line to avoid the addition of a new line

The hardware costs and the personnel time that are required for upgrading or adding a line vary greatly, depending on the following features:

- distance
- analog versus digital
- location
- number of carriers (for example, telephone companies and satellite transmission companies) that are involved

To estimate the cost of upgrading your 56K communication lines to T1 lines, see Table 2.

For example, use the following costs to calculate potential savings from postponing or canceling upgrades of your communications lines:

- cost of $500 per month to upgrade one leased line from 56K to T1
- setup fee of $1000 the first year

Table 2 Cost of Upgrading from 56K to T1

Lines Upgraded	Cost for First Year	Cost for Second Year	Total Costs
1	$7,000	$6,000	$13,000
10	$70,000	$60,000	$130,000

Note: In addition to these costs, you may need to add modem or router upgrade costs and carrier installation charges.

Reduced Costs of Existing Hardware

If your data center is not anticipating any growth in the number of transactions and you reduce the number of characters that are transmitted, you might be able to reduce the costs of your existing telecommunications hardware.

To reduce your costs, you could perform the following actions:

- reduce the speed of existing telecommunication lines and modems
- reduce the size of your 37*xx* communications controller
- reduce the number of separate telecommunication lines by multidropping

To estimate the savings realized by changing your T1 communication lines to 56K lines, see Table 3.

For example, use the following costs to calculate the potential savings from changing your communications lines and modems to use a lower speed:

- You can save $700 per month by changing one line from T1 to 56K
- You can save $1000 in setup fees for the first year

Table 3 Savings Realized by Changing from T1 to 56K

Lines Changed	Savings for First Year	Savings for Second Year	Total Savings
1	$7,000	$6,000	$13,000
10	$70,000	$60,000	$130,000

Note: In addition, you may need to subtract carrier installation charges.

Decreased Satellite Transmission Costs

Many telecommunications networks charge by the byte or the packet. The cost per transaction drops in direct proportion to the optimization percentage.

Increased Programmer Productivity

You can increase your productivity because ULTRAOPT products provide the following benefits:

- They relieve you of the responsibility to create optimized data streams.

  If your data center's optimization percentage is low, you probably have been aware of the problem of transmitting large amounts of data and have expended resources to reduce the amount of data.

  With ULTRAOPT installed, you can concentrate on programming and not be concerned with slow response times.

- They let you use premodified fields.

  If your inbound optimization percentage is low, the number of premodified fields is also low. Your data center may have discouraged or disallowed premodified fields because of the detrimental effect on response time.

  Premodified fields are easy and convenient for programmers to use as a storage area between transactions. This “storage area” eliminates the need for a temporary or permanent storage area.

Other Ways to Reduce Your Network Cost

Whether or not you use ULTRAOPT products, you can speed up your network transmission in other ways:

- purchase additional control units to reduce the terminals per line
- install faster modems (check the line turnaround speed)
- install more lines that are as fast as your modem
- install more or larger 37*xx* control units
- tune your NCP and VTAM parameters
- get a faster CPU to speed VTAM and application processing
- tune your host application (for example, CICS)
- rewrite your application programs to be more efficient

Most of these solutions are expensive and time-consuming. Your staff is probably already doing its best to tune NCP, VTAM, and your host applications.

How ULTRAOPT Works

ULTRAOPT contains two components: the Optimizer and the Monitor.

Optimizer Component

The Optimizer is a set of reentrant assembly-language programs that can intercept all VTAM data streams. The Optimizer consists of the following subsystems:

- BMC Software Primary Subsystem (BMCP)

  This subsystem is used only during start-up. After start-up is completed, this subsystem is no longer active and no CPU resources are used. The BMCP can be canceled to remove it from the system.

- ULTRAOPT Subsystem

  This subsystem contains the modules that perform optimization. These modules execute in the application address space.

The Optimizer component performs the following functions:

- reduces data stream lengths
- analyzes data streams for application and hardware errors
- traces data streams according to user-specified criteria
- saves statistics on the percentage of optimization

Optimizer Design Objectives

The Optimizer component functions as follows:

- adjusts dynamically to the VTAM release that your data center is using
- captures data streams for customer analysis
- adjusts dynamically to any data center customization changes that are selected from the Monitor component
- executes its code and acquires storage above the 16 MB line

Because CPU time is a critical resource, the Optimizer component uses as little CPU time as possible while still reducing data streams by a high percentage.

Other significant design features of the Optimizer component are as follows:

- The Optimizer processes and optimizes data streams containing any combination of the following items:

  — extended attributes
  — program symbols
  — color
  — vector graphics
  — APL text keyboards
  — hardware partitions
  — 12-bit, 14-bit, and 16-bit addressing
  — double-byte character set (DBCS)
  — write-structured fields including outbound data streams containing embedded 3270 data streams

  Note: DBCS optimization is very different from only providing DBCS support, which usually means that DBCS characters are recognized and the data streams containing these characters are passed but not optimized through the system.

- PC file transfers are processed with no user interaction required.
- Inbound and outbound data streams are checked for any hardware-generated or application-generated errors.
- Several user exit points are provided so that you can write exit programs to pre-process data streams, post-process data streams, or include/exclude a data stream for optimization, based on special user criteria.

Optimization and Compression Techniques

When the Optimizer receives control of data streams, it uses several methods to produce much smaller data streams that accomplish the same function as the larger ones. These techniques are controlled from the online Monitor.

Imaging® Optimization

This technology remembers what is displayed on each terminal screen. Imaging optimization transmits only the data necessary to make appropriate changes to the screen. Imaging optimization supports partitioned terminals such as 3179, 3180, 3193, 3290, and 3775.

Input Suppression Optimization

Using the Input Suppression optimization technique, the Optimizer reduces the length of inbound data streams. Input Suppression optimization has the following capabilities:

- uses Imaging optimization to remove unnecessary data and control characters that would otherwise be transmitted from the terminal to your host application

  This Imaging optimization is accomplished with the Optimizer software in the host CPU. No hardware changes are needed.

- makes additional adjustments to *outbound* data streams to further reduce their lengths

- reduces the number of characters transmitted and the number of line turnarounds

Depending on the type of hardware that your data center is using, inbound data streams are usually transmitted in pieces (or segments) of 256 or 512 bytes. After each piece is transmitted from the terminal to the host, the host must acknowledge that it received the data before the next piece can be transmitted.

The protocol that the hardware and software follow to accomplish this verification process is called line turnaround. If Input Suppression reduces your inbound data streams from two pieces to one piece, the number of line turnarounds is also reduced.

Erase Input Key Allowed Optimization

Erase Input Key Allowed optimization is a partial implementation of Input Suppression optimization. Erase Input Key Allowed optimization is provided for those data centers with terminal operators who use the **Erase Input** key.

Warning! Input Suppression optimization should not be used with **Erase Input**.

The difference between Input Suppression optimization and Erase Input Key Allowed optimization is that the reduction in data stream lengths is higher with Input Suppression.

Note: **Erase Input** and **Erase EOF** are have different functions. **Erase EOF** can be used with Input Suppression.

Conventional Optimization

The Optimizer uses the following Conventional optimization features:

- attribute elimination

  This feature eliminates all attributes embedded in outbound data streams that are being sent to printers.

- blank elimination

  This feature removes blanks from protected fields in outbound data streams that are being sent to CRTs and printers.

- field merge

  This feature allows your data center to eliminate start field orders from consecutive protected fields when the field attributes are the same.

- non-display fields

  This feature eliminates protected non-display fields from outbound data streams that are being sent to CRTs and printers.

Conventional optimization sorts data streams and eliminates repeating strings of characters, unnecessary or redundant user data, and unnecessary 3270 control characters.

The Conventional optimization technique is used when ULTRAOPT Imaging techniques cannot be used or when ULTRAOPT is installed but Imaging is turned off.

SCS Printer Optimization

The SCS Printer optimization technique optimizes outbound data streams for SCS printers. SCS printers print faster because they have less to print.

SCS Horizontal Tabs Optimization

Like SCS Printer optimization, this technique reduces the length of SCS printer data streams. SCS Horizontal Tabs optimization uses the horizontal formatting codes, Set Horizontal Format and Horizontal Tab. If your SCS Printers do not support these codes, this optimization technique cannot be used.

SNA Data Compression

SNA Data Compression compresses outbound data streams for 3600/4700 controllers and 3790 user programs that run application programs supporting SNA data decompression. This optimization technique expands compressed inbound data streams that were compressed by application LUs.

Monitor Component

The Monitor component is the online portion of ULTRAOPT. This component provides your data center with the following capabilities:

- start, stop, and shut down optimization
- dynamic control of the optimization techniques and options
- control, through the use of passwords, who can change the Monitor options
- summary statistics displays
- statistics displays by Termid
- statistics displays by Applid (VTAM application)
- print the Monitor screens and statistics immediately, at an hourly interval specified by your data center, or at Optimizer shutdown
- online Help Facility
- online Trace Facility to perform the following actions:
  - capturing any inbound or outbound data stream that is intercepted by ULTRAOPT, including APPC or LU 6.2 data
  - display captured data streams
  - print captured data streams
- perform error analysis of outbound and inbound 3270 data streams

By using the Monitor component of ULTRAOPT, your data center can perform the following tasks:

- display and print statistics
- tune the Optimizer for maximum data stream optimization
- trace any intercepted inbound or outbound data stream
- diagnose problems with data streams that are intercepted by ULTRAOPT

The Monitor consists of the following panels:

- Subsystem Menu
- ULTRAOPT Primary Menu
- Optimization Control
- Data Stream Statistics
- Data Stream Analysis
- Status
- Print or Reset Statistics
- Help

Subsystem Menu

After initialization, the first panel that is displayed is the Subsystem Menu. This panel displays the following items:

- selectable towers (ULTRAOPT/CICS and ULTRAOPT/IMS)
- status of license for that tower
- number of sessions licensed for that tower
- number of active sessions for that tower
- maximum number of sessions for that tower
- number of sessions exceeding the licensed limit for that tower (see Note below)
- ULTRAOPT subsystem version
- date of distribution tape

Note: Unlicensed sessions are active sessions that are not being optimized because the license limit has been exceeded. Using a MAXOPT value that is less than the license limit may cause this number to be less than actual.

ULTRAOPT Primary Menu

After selecting the ULTRAOPT option on the Subsystem Menu, the ULTRAOPT Primary Menu is displayed. This panel shows the following information:

- options that are selectable from the Primary Menu
- active or inactive status of the Optimizer
- yes or no status of Erase Input Key Allowed optimization
- on or off status of Imaging optimization, Input Suppression optimization, and SCS Printer optimization
- date of the product distribution tape
- password field that controls who can modify the Monitor panels

Optimization Control Menu

The Optimization Control Menu (Figure 4) lists the optimization control options that are provided by the Monitor. Using these options, you can fine-tune the way that your data streams are optimized so you can achieve the highest optimization possible.

Figure 4 Optimization Control Menu (1.0.0)

```
(1.0.0)                          ULTRAOPT                      December 29, 2001
Option. . ______            Optimization Control Menu                  12:04:34
                                 SYSID:SYSA

Select the menu from below.
1.1.x  Global                                1.4.x Conventional Optimization
  _ 1. Global optimization control   _ 1. Field Merge
                                            2. Blank Elimination
1.2.x  Imaging                              3. Non-Display Fields
  _ 1. Imaging                              4. Attribute Elimination
    2. Input Suppression
    3. Erase Input Key Allowed     1.5.x  User Exits
                                     _ 1. User Exits
1.3.x  Selective Optimization
  _ 1. SCS Printer Optimization
    2. SCS Horizontal Tabs
    3. PT Order Generation
    4. SNA Data Compression
    5. Local Format Storage



F1=Help  F2=Keys  F3=End  F4=Return
```

Data Stream Statistics Menu

The Data Stream Statistics Menu (not shown) lists the statistics options that are provided by the Monitor. Table 4 lists Data Stream Statistics menu options.

Table 4 Data Stream Statistics Menu Options

Option	Name	Description
2.1	Summary of Data Streams Optimized	displays summary statistics about the amount of optimization that has been obtained
2.2	Data Streams Optimized by LU/Applid	displays optimization statistics by LU or Applid
2.3	Data Streams Excluded by Installation	displays a list of intercepted data streams that you excluded and that were not optimized
2.4	Data Streams Excluded by Optimizer	displays a list of intercepted data streams that the Optimizer excluded and that were not optimized
2.5	Local Format Storage Summary	displays summary statistics for each IBM 3174 that is used for LFS optimization

Data Stream Analysis Menu

The Data Stream Analysis Menu (not shown) lists the data stream analysis options that are provided by the Monitor. These options let you determine the frequency and types of errors in your VTAM data streams. The options also let you capture inbound and outbound data streams for analysis. Table 5 lists Data Stream Analysis menu options.

Table 5 Data Stream Analysis Menu Options

Option	Name	Description
3.1	Application Outbound Data Stream Errors	displays information about any outbound data stream errors that are found by the Optimizer
3.2	Hardware Inbound Data Stream Errors	displays information about any inbound data stream errors that are found by the Optimizer
3.4	Wraparound Data Stream Traces	provides you with the ability to continually capture data streams by wrapping around the storage that has been allocated This trace can be stopped when you determine that the target data stream has been captured.

Status Menu

The Status Menu (not shown) lists the status options that are provided by the Monitor. Table 6 lists Status Menu options.

Table 6 Status Menu Options

Option	Name	Description
4.1	User Installation Tables	displays information about any user installation tables that have been created at your data center
4.2	Optimizer and Monitor Usage	displays the following information: • number of times that the Optimizer and Monitor were used • time and date that the Optimizer was last started and stopped • when and by whom the Optimization Control options or the Print or Reset Statistics options were changed
4.3	CPU Wall-Clock Time	displays information about the CPU wall-clock time used by the Optimizer to optimize your data streams

Print or Reset Statistics Panel

The Print or Reset Statistics panel (not shown) is displayed when you select Option 9 from any Monitor panel. The Print or Reset Statistics panel lets you print and/or reset statistics immediately, by interval, or whenever the Optimizer is shut down.

Help Facility

The Monitor Help facility provides online help for the Monitor panels. Each Monitor panel has a corresponding Help panel. The Help panels provide a brief description of the Monitor panel statistics or a brief tutorial about how to enter data in the fields that can be modified.

Maximizing ULTRAOPT Effectiveness

You can use ULTRAOPT/CICS and ULTRAOPT/IMS to achieve the following advantages:

- move your data centers to larger and more cost-effective locations
- standardize application screens
- improve the productivity of application programmers
- provide larger, better, or more convenient office space for terminal operators

The following examples describe ways that you can maximize the effectiveness of ULTRAOPT at your site:

Example 1

The location of terminals has been a prime consideration for many data centers. Many terminal operators want their terminals attached as local terminals to shorten response times. With ULTRAOPT, response time is no longer a consideration.

In addition, your data center no longer needs to be restricted to your corporate headquarters. Your company can select less expensive, larger, and more usable office locations. For example, you can select a location where raised floors are easier to construct and telecommunications networks are easier to set up and change.

Example 2

ULTRAOPT lets you consider changing your application programming standards.

For example, many application programmers like to use terminal screens as a place to store data. Screen storage is easy to use and convenient. Many data centers discourage this practice because it usually increases response times.

With ULTRAOPT, using the screen for storage can be an advantage. Storing data elsewhere can generate useless overhead.

Example 3

Some data centers have avoided adding certain headers, such as the company name, to screens because of the amount of data that would have to be transferred.

With ULTRAOPT, the amount of data is no longer a consideration.

Example 4

ULTRAOPT Imaging optimization technique sends only changed data to terminals. If all headers and dates are in the same position on every screen, they are transmitted only once rather than many times. Standardization of screens can greatly reduce the amount of data that is transferred.

You may discover many other ways to maximize the effectiveness of ULTRAOPT.

How System Resources Are Affected

This section provides you with information about the effect of ULTRAOPT on your system resources.

Application Programs

Adding ULTRAOPT to your system does not affect your application programs.

CPU Time

On an IBM 3090 Model 300J, optimizing a data stream can take approximately one to two milliseconds of elapsed time. The additional CPU time varies according to the original data stream length, the complexity, and the amount of optimization that is achieved. With ULTRAOPT, larger data stream reduction means shorter CPU time.

Hardware

ULTRAOPT uses standard IBM 3270 hardware instructions to reduce the length of data streams. No hardware modifications are necessary.

System Programmers

ULTRAOPT minimizes the amount of effort that is required to install, use, and maintain the product. ULTRAOPT affects your system programmers in the following ways:

- Installation is easy.
- ULTRAOPT statistics can be printed easily for permanent record-keeping and reports to management.
- Operation of ULTRAOPT is transparent to all VTAM Applids and to your terminal and printer users. No product training or education is needed.
- No new method of logging on is needed.
- The online Monitor is easy to use.
- With the ULTRAOPT Wraparound Data Stream Trace, capturing data streams for analysis is easy.

VTAM

Every ULTRAOPT distribution tape supports VTAM 4.3 and later:

- Even if your data center is using more than one VTAM release, only one installation of ULTRAOPT is required.
- No additional effort is needed to convert from one VTAM release to another.
- ULTRAOPT adjusts easily from one VTAM release to another with no intervention required.
- ULTRAOPT does not require any modifications to VTAM or any other component of your system.
- System Modification Program Extended (SMP/E) installation is not required, however, it is available. ULTRAOPT has no effect on your VTAM or system maintenance procedures.
- ULTRAOPT allows for continuous (24-hour) operation so that VTAM does not need to be shut down for file backup.

Storage Requirements

ULTRAOPT has the following storage requirements:

- common service area (CSA) storage that is used

  ULTRAOPT requires 40 KB of CSA storage.

- virtual storage that is used

  ULTRAOPT obtains all virtual storage above the 16 MB line in the extended private and common areas, except for 40 KB in CSA.

- Extended Common Storage Area (ECSA) storage that is used

  ULTRAOPT monitors your usage of the ECSA. If the storage that you allocated to ECSA is insufficient for ULTRAOPT to continue normal operation, ULTRAOPT will limit its activities to keep your system from terminating abnormally.

  When your use of ECSA exceeds 80 percent, ULTRAOPT will limit its activities as follows:

  — At 80% or higher, ULTRAOPT stops intercepting ACBs.
  — At 90% or higher, ULTRAOPT stops optimizing ACBs.
  — At 95% or higher, ULTRAOPT stops accepting new sessions (new users will not be able to log on).

Required Environments for ULTRAOPT

The following operating system environments are required for ULTRAOPT/CICS and ULTRAOPT/IMS:

- MVS/ESA, OS/390, or z/OS
- VTAM 4.3 or later
- 40 KB of CSA storage

ECSA Storage

ULTRAOPT/IMS products need to obtain virtual storage for handling data streams. The amount of storage that is used depends on the amount of the following items:

- data streams processed
- intercepted Applids
- sessions established

For information about how to calculate the amount of storage that is required by ULTRAOPT, see the *ULTRAOPT Customization Guide*.

The majority of virtual storage that is allocated by ULTRAOPT is obtained above the 16 MB line from the ECSA.

Supported Devices

ULTRAOPT products support the following devices:

- all 3270 models, including the following:
  - color
  - SCS printers
  - extended attributes
  - program symbols
  - SNA data streams
  - various screen sizes in characters that are as follows:
    - 12 rows by 40 columns
    - 12 rows by 80 columns
    - 24 rows by 80 columns
    - 32 rows by 80 columns
    - 43 rows by 80 columns
    - 27 rows by 132 columns
    - any other valid screen or partition size
- all 3600/4700 controllers and 3790 devices with decompression capability
- IBM 3174 Establishment Controllers with Local Format Storage

Program Specifications

The Optimizer component has the following specifications:

- VTAM application program written in assembler language
- reentrant
- 400 KB
- RMODE=ANY AMODE=31

The Monitor component has the following specifications:

- written in assembler language
- reentrant
- 294 KB
- RMODE=ANY AMODE=31

About BMC Software

BMC Software, Inc. is a worldwide developer and vendor of software solutions for automating application and data management across host-based and open systems environments.

BMC Software is a leading independent vendor of system software for IBM and IBM-compatible mainframe systems worldwide. The products that are developed, marketed, and supported by BMC Software enhance operations in IMS, CICS, VTAM, VSAM, DB2, NCP, TSO, and VM environments.

In addition, BMC Software is the data stream expert. BMC Software has been optimizing data streams since 1978.

Maintenance and Support

BMC Software is committed to providing the best systems software products and customer support in the industry. This commitment results in superior products that meet your highest needs for performance and value.

BMC Software continually upgrades its products so they remain compatible with the most current releases of software and hardware. BMC Software customer support representatives provide fast, comprehensive answers to questions from users. They are experts in the BMC Software products that they support and the environments in which these products operate.

BMC Software customer support representatives are on call 24 hours a day, 7 days a week, 365 days a year.

Extensive Testing Methods

BMC Software ensures thorough testing of new enhancements and increased optimization features. Using teleprocessing network simulator (TPNS) and a test base of our most complex data streams, BMC Software tests all changes to ensure that all optimization continues to be correct. BMC Software compares optimization percentages to ensure that optimization is always improving. BMC Software also checks the CPU time to ensure that it stays the same or decreases.

A variety of terminals (such as 3179, 3193, and 3290) is used to ensure that the latest data stream enhancements are supported.

30-Day-Plus Free Trial

Because each data processing organization has special needs when evaluating new software, BMC Software offers a free trial of its products at your data center. Here is how the 30-Day-Plus Free Trial works:

1. Install the BMC Software product on your test system using the password that is included in the shipping container or is provided by your sales representative.

2. Test ULTRAOPT and become familiar with its operation.

3. When you are ready, move the product to your production system.

4. Before the end of the trial period, contact your BMC Software sales representative to arrange for acquisition of the product. If the product does not meet your needs, return the program tape and the product documentation to BMC Software.

All BMC Software tapes and documentation are confidential and are for your organization’s exclusive use. By accepting this free trial, you acknowledge that the product is a trade secret of BMC Software.

Index

Numerics

16 MB line 30
30-Day-Plus Free Trial 50
3270 devices
    for compressing data streams 1
    supported 48
37*xx* communication controller
    reducing workload 20
    size and speed 6

A

ACB (application control block) 45
addressing
    12-bit 30
    14-bit 30
    16-bit 30
APL text keyboards 30
application environment, sample 15
application programming 42
application programs 43
attribute bytes 3
attribute elimination 32

B

backups 44
basic mapping support. *See* BMS
benefits of ULTRAOPT 17
blank elimination 32
BMS (basic mapping support) 4
BSR (Bypass Send and Receive)
    costs reduced 10
    features 10
    response times improved 9
    session managers and 21
    VTAM and 19
Bypass Send and Receive. *See* BSR

C

cache 13
central processing unit. *See* CPU
CICS (Customer Information Control System)
    transmission path 2
cluster controllers 14
color 30, 48
communications link 6
components
    See Monitor component; Optimizer component
control data, information in 3
control units
    definition 6
    enable screen format storage 1
    optimization benefits 8
controllers
    cluster 14
    compressing data streams 1
    devices supported 48
    Establishment 13, 48
    LFS and 13
    reducing workload 20
conventional optimization 32
costs
    calculating savings 24
    data center location 41
    justifying 23
    reducing 28
    telecommunications hardware 19, 25, 26
    upgrading communication lines 26
CPU (central processing unit)
    factors affecting transmission speed 7
    reducing overhead 1
    time required 43
CSA (common service area) 45, 47
Customer Information Control System. *See* CICS
CUT (control unit terminal) 13

D

Data Stream Analysis Menu 38
Data Stream Statistics Menu 38
data streams
    3270 data streams embedded 30
    compressing 2
    creating 4
    definition 3
    factors affecting transmission speed 6
    information in 3
    local transmission path 8
    optimization example 5
    types of 4
DBCS (double-byte character set) 30
DFT (distributed function terminal) 13
distribution tape
    date 35
    VTAM versions supported 44
double-byte character set. *See* DBCS

E

ECSA (Extended Common Storage Area) 45, 47
Erase Input Key Allowed optimization 32
errors
    data stream analysis 34
    VTAM data streams 38
errors, data stream analysis 30
Establishment Controllers 13, 48
extended attributes 48
Extended Common Storage Area. *See* ECSA

F

FEP (front-end processor) 14
field merge 32
file transfers 30
full-duplex
    definition 7
    reducing line turnarounds 18

G

GDDM (graphical data display manager) 8, 18

H

half-duplex
    definition 7
    reducing line turnarounds 18
hardware
    delaying upgrades 25
    modifications 43
    reducing costs 26
headers
    adding 42
    size of data in 42
Help facility 34, 39
host application environment, sample 15

I

Imaging optimization 31
Input Suppression optimization 31
installation 44
interception rules 12
Internet Protocol. *See* IP
IP (Internet Protocol) 9

L

LFS (Local Format Storage)
    controllers and 48
    definition 13
    optimization feature 9
    summary statistics 38
    usage 13
line turnarounds
    average speed 7
    decreasing 18
    definition 7
    Input Suppression 31
Local Format Storage. *See* LFS
local terminals, improving response time 18
LU (logical unit) 33

M

marked data. *See* premodified data
menus
    Data Stream Statistics Analysis Menu 38
    Data Stream Statistics Menu 38
    Optimization Control Menu 37
    Primary Menu 36
    Status Menu 39
    Subsystem Menu 35
modems
    definition 6
    reducing cost 20
Monitor component
    features 34
    overview 34
    program specifications 48
MVS/ESA 47

N

NCP (network control program)
    parameters 7
    reducing workload 6, 19
network control program. *See* NCP
non-display fields 32

O

Optimization Control Menu 37
optimization solutions 1
Optimizer component
    compression techniques 31
    control from online Monitor 31
    description 29
    features 30
    overview 29
    program specifications 48
orders 3
OS/390 47

P

partitions
    hardware 30
    size 48
    terminals 31
premodified data 4
premodified fields 28
Primary Menu 36
Print or Reset Statistics panel 39
productivity
    programmers 27
    terminal operators 20
program symbols 48

R

RA (repeat-to-address) 5
repeat-to-address. *See* RA
Response Time Monitoring. *See* RTM
response times
    cost justification and 23
    customer satisfaction with 2
    host 12
    improving 2, 17
    network 12
    statistics 13
    terminal location 41
RPQ (request for price quotation) 14
RTM (Response Time Monitoring)
    definition 12
    features 9
    usage 13
rules of interception 12

S

satellite transmissions, reducing cost 19
screen
    sizes 48
    storage 1, 42
SCS Horizontal Tabs optimization 33

SCS printers
compressing data streams 1
devices supported 48
optimizing technique 33
SDLC (synchronous data link control), definition 7
security
passwords 36
transmissions 21
session manager 1, 10
BSR and 21
improving performance 21
SMP (System Modification Program) 44
SNA (Systems Network Architecture)
Data Compression 33
data streams 1, 48
protocol 9
SNA character string printers. *See* SCS printers
Status Menu 39
storage
ECSA 47
premodified fields 28
requirements 45
using the screen 1, 42
Subsystem Menu 35
synchronous data link control. *See* SDLC
System Modification Program. *See* SMP
system programmers 44
system resources 43
Systems Network Architecture. *See* SNA

T

telecommunications protocol 7
teleprocessing network simulator. *See* TPNS
terminals, location 41
testing methods 50
TN3270 9
TPNS (teleprocessing network simulator) 50
trace facility 34
transmission path 7
transmission speed, factors affecting 6

U

ULTRAOPT/TN3270 9
user exits 30

V

vector graphics 30
virtual storage 45
Virtual Telecommunications Access Method. *See* VTAM
VTAM (Virtual Telecommunications Access Method)
BSR and 19
data streams 1
LFS and 14
parameters 7
reducing workload 19
removing bottlenecks 8
requirements 47
supported releases 44

W

write-structured fields 30

Z

z/OS 47

END USER LICENSE AGREEMENT
NOTICE

BY OPENING THE PACKAGE, INSTALLING, PRESSING "AGREE" OR "YES" OR USING THE PRODUCT, THE ENTITY OR INDIVIDUAL ENTERING INTO THIS AGREEMENT AGREES TO BE BOUND BY THE FOLLOWING TERMS. IF YOU DO NOT AGREE WITH ANY OF THESE TERMS, DO NOT INSTALL OR USE THE PRODUCT, PROMPTLY RETURN THE PRODUCT TO BMC OR YOUR BMC RESELLER, AND IF YOU ACQUIRED THE LICENSE WITHIN 30 DAYS OF THE DATE OF YOUR ORDER CONTACT BMC OR YOUR BMC RESELLER FOR A REFUND OF LICENSE FEES PAID. IF YOU REJECT THIS AGREEMENT, YOU WILL NOT ACQUIRE ANY LICENSE TO USE THE PRODUCT.

This Agreement ("**Agreement**") is between the entity or individual entering into this Agreement ("You") and BMC Software Distribution, Inc., a Delaware corporation located at 2101 CityWest Blvd., Houston, Texas, 77042, USA or its affiliated local licensing entity ("BMC"). "You" includes you and your Affiliates. "Affiliate" is defined as an entity which controls, is controlled by or shares common control with a party. THIS AGREEMENT WILL APPLY TO THE PRODUCT, UNLESS (1) YOU AGREED TO A WEB BASED LICENSE AGREEMENT WITH BMC WHEN ORDERING THE PRODUCT, IN WHICH CASE THAT WEB BASED LICENSE AGREEMENT GOVERNS THE USE OF THE PRODUCT, OR (2) IF YOU DID NOT AGREE TO A WEB BASED LICENSE AGREEMENT WITH BMC WHEN ORDERING THE PRODUCT AND YOU HAVE A WRITTEN LICENSE AGREEMENT WITH BMC, THEN THAT WRITTEN AGREEMENT GOVERNS THE USE OF THE PRODUCT. THE ELECTRONIC AGREEMENT PROVIDED WITH THE PRODUCT AS PART OF THE INSTALLATION OF THE PRODUCT WILL NOT APPLY. In addition to the restrictions imposed under this Agreement, any other usage restrictions contained in the Product installation instructions or release notes shall apply to Your use of the Product.

PRODUCT AND CAPACITY. "**Software**" means the object code version of the computer programs provided, via delivery or electronic transmission, to You. Software includes computer files, enhancements, maintenance modifications, upgrades, updates, bug fixes, and error corrections.

"**Documentation**" means all written or graphical material provided by BMC in any medium, including any technical specifications, relating to the functionality or operation of the Software.

"**Product**" means the Software and Documentation.

"**License Capacity**" means the licensed capacity for the Software with the pricing and other license defining terms, including capacity restrictions, such as tier limit, total allowed users, gigabyte limit, quantity of Software, and/or other capacity limitations regarding the Software. For licenses based on the power of a computer, You agree to use BMC's current computer classification scheme, which is available at http://www.bmc.com or can be provided to You upon request.

ACCEPTANCE. The Product is deemed accepted by You, on the date that You received the Product from BMC.

LICENSE. Subject to the terms of this Agreement, as well as Your payment of applicable fees, BMC grants You a non-exclusive, non-transferable, perpetual (unless a term license is provided on an order) license for each copy of the Software, up to the License Capacity, to do the following:

(a) install the Software on Your owned or leased hardware located at a facility owned or controlled by You in the country where You acquired the license;

(b) operate the Software solely for processing Your own data in Your business operations; and

(c) make one copy of the Software for backup and archival purposes only (collectively a "**License**").

If the Software is designed by BMC to permit you to modify such Software, then you agree to only use such modifications or new software programs for Your internal purposes or otherwise consistent with the License. BMC grants You a license to use the Documentation solely for Your internal use in Your operations.

LICENSE UPGRADES. You may expand the scope of the License Capacity only pursuant to a separate agreement with BMC for such expanded usage and Your payment of applicable fees. There is no additional warranty period or free support period for license upgrades.

RESTRICTIONS: You agree to **NOT**:
(a) disassemble, reverse engineer, decompile or otherwise attempt to derive any Software from executable code;

(b) distribute or provide the Software to any third party (including without limitation, use in a service bureau, outsourcing environment, or processing the data of third parties, or for rental, lease, or sublicense); or

(c) provide a third party with the results of any functional evaluation or benchmarking or performance tests, without BMC's prior written approval, unless prohibited by local law.

TRIAL LICENSE. If, as part of the ordering process, the Product is provided on a trial basis, then these terms apply: (i) this license consists solely of a non-exclusive, non-transferable evaluation license to operate the Software for the period of time specified from BMC or, if not specified, a 30 day time period ("**Trial Period**") only for evaluating whether You desire to acquire a capacity-based license to the Product for a fee; and (ii) Your use of the Product is on an AS IS basis without any warranty, and **BMC, ITS AFFILIATES AND RESELLERS, AND LICENSORS DISCLAIM ANY AND ALL WARRANTIES (INCLUDING, WITHOUT LIMITATION, THE IMPLIED WARRANTIES OF MERCHANTABILITY, FITNESS FOR A PARTICULAR PURPOSE AND NON-INFRINGEMENT) AND HAVE NO LIABILITY WHATSOEVER RESULTING FROM THE USE OF THIS PRODUCT UNDER THIS TRIAL LICENSE ("Trial License")**. BMC may terminate for its convenience a Trial License upon notice to You. When the Trial Period ends, Your right to use this Product automatically expires. If You want to continue Your use of the Product beyond the Trial Period, contact BMC to acquire a capacity-based license to the Product for a fee.

TERMINATION. This Agreement shall immediately terminate if You breach any of its terms. Upon termination, for any reason, You must uninstall the Software, and either certify the destruction of the Product or return it to BMC.

OWNERSHIP OF THE PRODUCT. BMC or its Affiliates or licensors retain all right, title and interest to and in the BMC Product and all intellectual property, informational, industrial property and proprietary rights therein. BMC neither grants nor otherwise transfers any rights of ownership in the BMC Product to You. BMC Products are protected by applicable copyright, trade secret, and industrial and intellectual property laws. BMC reserves any rights not expressly granted to You herein.

CONFIDENTIAL AND PROPRIETARY INFORMATION. The BMC Products are and contain valuable confidential information of BMC ("**Confidential Information**"). Confidential Information means non-public technical and non-technical information relating to the BMC Products and Support, including, without limitation, trade secret and proprietary information, and the structure and organization of the Software. You may not disclose the Confidential Information to third parties. You agree to use all reasonable efforts to prevent the unauthorized use, copying, publication or dissemination of the Product.

WARRANTY. Except for a Trial License, BMC warrants that the Software will perform in substantial accordance with the Documentation for a period of one year from the date of the order. This warranty shall not apply to any problems caused by software or hardware not supplied by BMC or to any misuse of the Software.

EXCLUSIVE REMEDY. BMC's entire liability, and Your exclusive remedy, for any defect in the Software during the warranty period or breach of the warranty above shall be limited to the following: BMC shall use reasonable efforts to remedy defects covered by the warranty or replace the defective Software within a reasonable period of time, or if BMC cannot remedy or replace such defective copy of the Software, then BMC shall refund the amount paid by You for the License for that Software. BMC's obligations in this section are conditioned upon Your providing BMC prompt access to the affected Software and full cooperation in resolving the claim.

DISCLAIMER. EXCEPT FOR THE EXPRESS WARRANTIES ABOVE, THE PRODUCT IS PROVIDED "AS IS." BMC, ITS AFFILIATES AND LICENSORS SPECIFICALLY DISCLAIM ALL OTHER WARRANTIES, INCLUDING, WITHOUT LIMITATION, THE IMPLIED WARRANTIES OF MERCHANTABILITY, FITNESS FOR A PARTICULAR PURPOSE, AND NON-INFRINGEMENT. BMC DOES NOT WARRANT THAT THE OPERATION OF THE SOFTWARE WILL BE UNINTERRUPTED OR ERROR FREE, OR THAT ALL DEFECTS CAN BE CORRECTED.

DISCLAIMER OF DAMAGES. IN NO EVENT IS BMC, ITS AFFILIATES OR LICENSORS LIABLE FOR ANY SPECIAL, INDIRECT, INCIDENTAL, PUNITIVE OR CONSEQUENTIAL DAMAGES RELATING TO OR ARISING OUT OF THIS AGREEMENT, SUPPORT, AND/OR THE PRODUCT (INCLUDING, WITHOUT LIMITATION, LOST PROFITS, LOST COMPUTER USAGE TIME, AND DAMAGE OR LOSS OF USE OF DATA), EVEN IF ADVISED OF THE POSSIBILITY OF SUCH DAMAGES, AND IRRESPECTIVE OF ANY NEGLIGENCE OF BMC OR WHETHER SUCH DAMAGES RESULT FROM A CLAIM ARISING UNDER TORT OR CONTRACT LAW.

LIMITS ON LIABILITY. BMC'S AGGREGATE LIABILITY FOR DAMAGES IS LIMITED TO THE AMOUNT PAID BY YOU FOR THE LICENSE TO THE PRODUCT.

SUPPORT. If Your order includes support for the Software, then BMC agrees to provide support (24 hours a day/7 days a week) ("**Support**"). You will be automatically re-enrolled in Support on an annual basis unless BMC receives notice of termination from You as provided below. There is a free support period during the one year warranty period.

(a) **Support Terms**. BMC agrees to make commercially reasonable efforts to provide the following Support: (i) For malfunctions of supported versions of the Software, BMC provides bug fixes, patches or workarounds in order to cause that copy of the Software to operate in substantial conformity with its then-current operating specifications; and (ii) BMC provides new releases or versions, so long as such new releases or versions are furnished by BMC to all other enrolled Support customers without additional charge. BMC may refuse to provide Support for any versions or releases of the Software other than the most recent version or release of such Software made available by BMC. Either party may terminate Your enrollment in Support upon providing notice to the other at least 30 days prior to the next applicable Support anniversary date. If You re-enroll in Support, BMC may charge You a reinstatement fee of 1.5 times what You would have paid if You were enrolled in Support during that time period.

(b) **Fees**. The annual fee for Support is 20% of the Software's list price less the applicable discount or a flat capacity based annual fee. BMC may change its prices for the Software and/or Support upon at least 30 days notice prior to Your support anniversary date.

VERIFICATION. If requested by BMC, You agree to deliver to BMC periodic written reports, whether generated manually or electronically, detailing Your use of the Software in accordance with this Agreement, including, without limitation, the License Capacity. BMC may, at its expense, audit Your use of the Software to confirm Your compliance with the Agreement. If an audit reveals that You have underpaid fees, You agree to pay such underpaid fees. If the underpaid fees exceed 5% of the fees paid, then You agree to also pay BMC's reasonable costs of conducting the audit.

EXPORT CONTROLS. You agree not to import, export, re-export, or transfer, directly or indirectly, any part of the Product or any underlying information or technology except in full compliance with all United States, foreign and other applicable laws and regulations.

GOVERNING LAW. This Agreement is governed by the substantive laws in force, without regard to conflict of laws principles: (a) in the State of New York, if you acquired the License in the United States, Puerto Rico, or any country in Central or South America; (b) in the Province of Ontario, if you acquired the License in Canada (subsections (a) and (b) collectively referred to as the "**Americas Region**"); (c) in Singapore, if you acquired the License in Japan, South Korea, Peoples Republic of China, Special Administrative Region of Hong Kong, Republic of China, Philippines, Indonesia, Malaysia, Singapore, India, Australia, New Zealand, or Thailand (collectively, "**Asia Pacific Region**"); or (d) in the Netherlands, if you acquired the License in any other country not described above. The United Nations Convention on Contracts for the International Sale of Goods is specifically disclaimed in its entirety.

ARBITRATION. ANY DISPUTE BETWEEN YOU AND BMC ARISING OUT OF THIS AGREEMENT OR THE BREACH OR ALLEGED BREACH, SHALL BE DETERMINED BY BINDING ARBITRATION CONDUCTED IN ENGLISH. IF THE DISPUTE IS INITIATED IN THE AMERICAS REGION, THE ARBITRATION SHALL BE HELD IN NEW YORK, U.S.A., UNDER THE CURRENT COMMERCIAL OR INTERNATIONAL, AS APPLICABLE, RULES OF THE AMERICAN ARBITRATION ASSOCIATION. IF THE DISPUTE IS INITIATED IN A COUNTRY IN THE ASIA PACIFIC REGION, THE ARBITRATION SHALL BE HELD IN SINGAPORE, SINGAPORE UNDER THE CURRENT UNCITRAL ARBITRATION RULES. IF THE DISPUTE IS INITIATED IN A COUNTRY OUTSIDE OF THE AMERICAS REGION OR ASIA PACIFIC REGION, THE ARBITRATION SHALL BE HELD IN AMSTERDAM, NETHERLANDS UNDER THE CURRENT UNCITRAL ARBITRATION RULES. THE COSTS OF THE ARBITRATION SHALL BE BORNE EQUALLY PENDING THE ARBITRATOR'S AWARD. THE AWARD RENDERED SHALL BE FINAL AND BINDING UPON THE PARTIES AND SHALL NOT BE SUBJECT TO APPEAL TO ANY COURT, AND MAY BE ENFORCED IN ANY COURT OF COMPETENT JURISDICTION. NOTHING IN THIS AGREEMENT SHALL BE DEEMED AS PREVENTING EITHER PARTY FROM SEEKING INJUNCTIVE RELIEF FROM ANY COURT HAVING JURISDICTION OVER THE PARTIES AND THE SUBJECT MATTER OF THE DISPUTE AS NECESSARY TO PROTECT EITHER PARTY'S CONFIDENTIAL INFORMATION, OWNERSHIP, OR ANY OTHER

PROPRIETARY RIGHTS. ALL ARBITRATION PROCEEDINGS SHALL BE CONDUCTED IN CONFIDENCE, AND THE PARTY PREVAILING IN ARBITRATION SHALL BE ENTITLED TO RECOVER ITS REASONABLE ATTORNEYS' FEES AND NECESSARY COSTS INCURRED RELATED THERETO FROM THE OTHER PARTY.

U.S. GOVERNMENT RESTRICTED RIGHTS. The Software under this Agreement is "commercial computer software" as that term is described in 48 C.F.R. 252.227-7014(a)(1). If acquired by or on behalf of a civilian agency, the U.S. Government acquires this commercial computer software and/or commercial computer software documentation subject to the terms of this Agreement as specified in 48 C.F.R. 12.212 (Computer Software) and 12.211 (Technical Data) of the Federal Acquisition Regulations ("**FAR**") and its successors. If acquired by or on behalf of any agency within the Department of Defense ("**DOD**"), the U.S. Government acquires this commercial computer software and/or commercial computer software documentation subject to the terms of this Agreement as specified in 48 C.F.R. 227.7202 of the DOD FAR Supplement and its successors.

MISCELLANEOUS TERMS. You agree to pay BMC all amounts owed no later than 30 days from the date of the applicable invoice, unless otherwise provided on the order for the License to the Products. You will pay, or reimburse BMC, for taxes of any kind, including sales, use, duty, tariffs, customs, withholding, property, value-added (VAT), and other similar federal, state or local taxes (other than taxes based on BMC's net income) imposed in connection with the Product and/or the Support. This Agreement constitutes the entire agreement between You and BMC and supersedes any prior or contemporaneous negotiations or agreements, whether oral, written or displayed electronically, concerning the Product and related subject matter. No modification or waiver of any provision hereof will be effective unless made in a writing signed by both BMC and You. You may not assign or transfer this Agreement or a License to a third party without BMC's prior written consent. Should any provision of this Agreement be invalid or unenforceable, the remainder of the provisions will remain in effect. The parties have agreed that this Agreement and the documents related thereto be drawn up in the English language. Les parties exigent que la présente convention ainsi que les documents qui s'y rattachent soient rédigés en anglais.

SW EULA Int 030102

Notes

20767