Implementing Security for MAINVIEW® Products

Version 4.1

November 21, 2003

bmcsoftware

Copyright 2003 BMC Software, Inc. All rights reserved.

BMC Software, the BMC Software logos, and all other BMC Software product or service names are registered trademarks or trademarks of BMC Software, Inc. All other trademarks belong to their respective companies.

BMC Software considers information included in this documentation to be proprietary and confidential. Your use of this information is subject to the terms and conditions of the applicable End User License Agreement for the product and the proprietary and restricted rights notices included in this documentation.

Restricted Rights Legend

U.S. Government Restricted Rights to Computer Software. UNPUBLISHED -- RIGHTS RESERVED UNDER THE COPYRIGHT LAWS OF THE UNITED STATES. Use, duplication, or disclosure of any data and computer software by the U.S. Government is subject to restrictions, as applicable, set forth in FAR Section 52.227-14, DFARS 252.227-7013, DFARS 252.227-7014, DFARS 252.227-7015, and DFARS 252.227-7025, as amended from time to time. Contractor/Manufacturer is BMC Software, Inc., 2101 CityWest Blvd., Houston, TX 77042-2827, USA. Any contract notices should be sent to this address.

Contacting BMC Software

You can access the BMC Software Web site at **http://www.bmc.com**. From this Web site, you can obtain information about the company, its products, corporate offices, special events, and career opportunities.

United States and Canada

Address BMC Software, Inc.
2101 CityWest Blvd.
Houston TX 77042-2827

Telephone 713 918 8800 or
800 841 2031

Fax 713 918 8000

Outside United States and Canada

Telephone (01) 713 918 8800

Fax (01) 713 918 8000

Customer Support

You can obtain technical support by using the Support page on the BMC Software Web site or by contacting Customer Support by telephone or e-mail. To expedite your inquiry, please see “Before Contacting BMC Software.”

Support Web Site

You can obtain technical support from BMC Software 24 hours a day, 7 days a week at **http://www.bmc.com/support_home**. From this Web site, you can

- read overviews about support services and programs that BMC Software offers
- find the most current information about BMC Software products
- search a database for problems similar to yours and possible solutions
- order or download product documentation
- report a problem or ask a question
- subscribe to receive e-mail notices when new product versions are released
- find worldwide BMC Software support center locations and contact information, including e-mail addresses, fax numbers, and telephone numbers

Support by Telephone or E-mail

In the United States and Canada, if you need technical support and do not have access to the Web, call 800 537 1813. Outside the United States and Canada, please contact your local support center for assistance. To find telephone and e-mail contact information for the BMC Software support center that services your location, refer to the Contact Customer Support section of the Support page on the BMC Software Web site at **www.bmc.com/support_home**.

Before Contacting BMC Software

Before you contact BMC Software, have the following information available so that Customer Support can begin working on your problem immediately:

- product information
  - product name
  - product version (release number)
  - license number and password (trial or permanent)
- operating system and environment information
  - machine type
  - operating system type, version, and service pack or other maintenance level such as PUT or PTF
  - system hardware configuration
  - serial numbers
  - related software (database, application, and communication) including type, version, and service pack or maintenance level
- sequence of events leading to the problem
- commands and options that you used
- messages received (and the time and date that you received them)
  - product error messages
  - messages from the operating system, such as `file system full`
  - messages from related software

Contents

Part 1. Introduction 1

Chapter 1. Introduction to MAINVIEW Security 3
Types of Security 3
Basic Security 4
Enhanced Security 4
MAINVIEW Alternate Access Security 5

Part 2. Basic Security 7

Chapter 2. Introduction to Basic Security 9
Controlling Access to Your MAINVIEW Product 9
More MAINVIEW Product Functions to Secure 9
Creating Global Security Definitions 10
Using Features of Your External Security Manager 10
What Is Required for Basic Security? 11
Phase 1: Reviewing the Resources for the Products You Want to Secure 11
Phase 2: Determining a Naming Convention 12
Phase 3: Activating Security 12

Chapter 3. Reviewing Product Resources 13
Resource Naming Conventions 13
MAINVIEW AutoOPERATOR, MAINVIEW FOCAL POINT, MAINVIEW for CICS, MAINVIEW for DB2, MAINVIEW for DBCTL, MAINVIEW for IMS Online 13
MAINVIEW Total Object Manager (TOM) 14
MAINVIEW SYSPROG Services and COMMON STORAGE MONITOR 15
Resources Used by Multiple Products 16
Resources Common to MAINVIEW AutoOPERATOR, MAINVIEW FOCAL POINT, MAINVIEW for CICS, MAINVIEW for DB2, MAINVIEW for DBCTL, and MAINVIEW for IMS Online 16
Resources Common to MAINVIEW SYSPROG Services, MAINVIEW AutoOPERATOR, and MAINVIEW for OS/390 23
Resources Common to MAINVIEW for CICS and the MAINVIEW AutoOPERATOR for CICS Option 34
Resources for CMF MONITOR 48
Resources for MAINVIEW AutoOPERATOR: Advanced Security 48
Resources for MAINVIEW AutoOPERATOR Applications: (FEATURE=APPL) 50
Resources for MAINVIEW AutoOPERATOR Commands and Transactions: (FEATURE=CMD) 56
Resources for MAINVIEW AutoOPERATOR ALERTs: (FEATURE=ALRT) 59
Resources for MAINVIEW AutoOPERATOR EXECs: (FEATURE=EXEC) 59
Resources for MAINVIEW AutoOPERATOR Parameter Data: (FEATURE=PARM) . . 60
Resources for MAINVIEW FOCAL POINT, MAINVIEW for DBCTL, and MAINVIEW for IMS Online 61
Resources for MAINVIEW for CICS 61

Resources for MAINVIEW for DB2 69
Resources for MAINVIEW Total Object Manager (TOM) 70
Access through an EXCP Terminal 79

Chapter 4. Configuring Your ESM for Basic Security 81
Defining Security Class $BOOLE 81
Defining MAINVIEW Product Resources to Protect 82
Authorizing Access 82
Example: Securing MVS Commands for All Users 83
Example: Allowing All Users to Send Messages to the BBI-SS PAS Journal 83
Example: Allowing Mixed Accessibility 84
Identifying MAINVIEW SYSPROG Services 84
Granting or Denying Access 85
Granting Access 85
Denying Access 86
Creating Global Security Definitions: Using Generics 86
Listing MAINVIEW Product Resource Names 87

Chapter 5. Using CLISTs to Identify Resources 105
Creating Resource Names for MAINVIEW Products 106
Migrating Existing Resource Names for MAINVIEW Products 106
Creating Resource Names for MAINVIEW AutoOPERATOR 107
Creating Resource Names for CICS Resources 108
Creating Resource Names for MAINVIEW for DB2 CMD-Level Security: DB2CMDDF and DB2CMDPE 109

Chapter 6. Activating Basic Security 111
Creating the Basic Security Member BBSEC 112
BBSEC Syntax 112
BBSEC TYPE= Statement 113
BBSEC Examples 117
Adding BBSEC to BBPARM or the Logical Parmlib 118
Disabling Basic Security 119

Chapter 7. Securing SYSPROG and CSMON Services 121
Activating Changes to BBSEC by Executing BBXSAF00 121
Determining the Function Qualifier for SYSPROG Resource Names 122
Using an Exit to Modify the Function Qualifier in SYSPROG Resource Names 122
Determining the Function Qualifier for CSMON Resource Names 123
Using the Password Utility 123
Password Utility JCL 124
Password Utility Return Codes 125

Part 3. Enhanced Security 127

Chapter 8. Introduction to Enhanced Security 131
Which Products Use Enhanced Security? 131
How Enhanced Security Works 132
Authorization at the CAS, PAS, and TS User Levels 132
MAINVIEW Resources 133
Resource Naming Convention 133
Finding Entity Names 135
Exploiting the Resource Naming Convention 135

Security Parameter Library . . . 137
Sharing a Security Parameter Library Between CASs . . . 137
Views for Administering Enhanced Security . . . 138
Using Security Views to Change Resource Attributes . . . 139
Establishing Enhanced Security . . . 141
Disabling Enhanced Security for All MAINVIEW Resources . . . 142
Determining Which Security Members Are Active . . . 143
CAS Security Members . . . 143
PAS Security Member . . . 144

Chapter 9. Configuring Your ESM for Enhanced Security . . . 145
Configuring CA-ACF2 . . . 145
Step 1: Setting the Required GSO Record Options . . . 146
Step 2: Authorizing the PAS and CAS . . . 146
Step 3: Updating the CA-ACF2 SAFDEF List . . . 148
Step 4: (Optional) Adding a SAF Resource Class to CA-ACF2 . . . 149
Step 5: (Optional) Defining Rules for Controlling View Resources . . . 151
Configuring RACF . . . 154
Step 1: Authorizing the CAS and PAS . . . 154
Step 2: (Optional) Adding Resource Classes to RACF . . . 155
Step 3: Creating RACF Security Profiles . . . 157
Step 4: Specifying Profiles to Control Access to Product Resources . . . 158
Configuring CA-TOP SECRET . . . 160
Step 1: Defining a New CA-TOP SECRET Facility Matrix Entry . . . 161
Step 2: Authorizing the CAS and PAS . . . 162
Step 3: (Optional) Adding a New SAF Resource Class . . . 163
Step 4: Defining Ownership of Resources . . . 164
Step 5: Controlling Access to Product Resources . . . 165

Chapter 10. Class Definitions . . . 167
Working with Class Definition Members . . . 167
Displaying a List of Class Definition Members (SECDEFL) . . . 167
Creating a Class Definition Member . . . 168
Activating a New Class Definition Member . . . 169
Deleting a Class Definition Member . . . 169
Working with Class Definitions . . . 170
Displaying a Class (SECDEF) . . . 170
Changing a Class . . . 171
Adding a New Class . . . 173
Deleting a Class . . . 174
Recovering a Deleted Class . . . 174
Dynamically Activating Class Changes . . . 175

Chapter 11. Parameter Definitions . . . 177
Displaying a List of Parameter Definitions (SEPDEFL) . . . 178
Displaying a Parameter Definition (SEPDEF and SEPDEFD) . . . 178
Changing a Parameter Definition . . . 179
Creating a New Parameter Definition . . . 182
Activating a Parameter Definition . . . 183
Deleting a Parameter Definition . . . 183

Chapter 12. Resource Definitions . . . 185
Before You Begin . . . 185
Working with Resource Definition Members . . . 186

Displaying a List of Members using the SERDEFL View 186
Creating a New Resource Definition Member 186
Activating a New Member for Common Resources. 187
Activating a New Member for Product Resources 187
Deleting a Member 188
Working with Resource Definitions 189
Browsing a Resource Definition. 190
Enabling a Resource Definition 191
Disabling a Resource Definition 191
Changing a Resource Definition 191
Canceling Resource Definition Changes 193
Saving a Resource Definition 193

Chapter 13. Protecting the MAINVIEW Security Interface 195

Chapter 14. Resource Definitions Listed by Product 197
Common MAINVIEW Resources. 197
Plex Manager Resources 205
CMF MONITOR and MAINVIEW for OS/390 Resources 214
MAINVIEW Alarm Manager Resources 234
MAINVIEW Explorer 239
MAINVIEW for CICS Resources 240
MAINVIEW for DATA ACCELERATOR Compression 263
MAINVIEW for DB2 Resources. 265
MAINVIEW for IMS Online and MAINVIEW for DBCTL Resources 269
MAINVIEW for IP Resources. 279
MAINVIEW for Linux – Servers Resources. 283
MAINVIEW for UNIX System Services Resources. 288
MAINVIEW for VTAM Resources. 296
MAINVIEW for WebSphere Application Server Resources 298
MAINVIEW for WebSphere MQ Resources 300
MAINVIEW Storage Resource Manager (SRM) Resources 323
MAINVIEW SYSPROG Services Resources 363
MAINVIEW VistaPoint Resources 367

Chapter 15. Resource Definitions Listed by View 369
Common Views 369
Plex Manager Views 370
CMF MONITOR and MAINVIEW for OS/390 Views 371
MAINVIEW Alarm Manager Views 378
MAINVIEW Explorer Views 379
MAINVIEW for CICS Views 380
MAINVIEW for DATA ACCELERATOR Compression Views 384
MAINVIEW for DB2 Views 385
MAINVIEW for IMS Online and MAINVIEW for DBCTL Views 386
MAINVIEW for IP Views 389
MAINVIEW for Linux – Servers Views 392
MAINVIEW for UNIX System Services Views 394
MAINVIEW for VTAM Views 397
MAINVIEW for WebSphere Application Server Views 398
MAINVIEW for WebSphere MQ Views 400
MAINVIEW Storage Resource Manager (SRM) Views 403
MAINVIEW SYSPROG Services Views 410
MAINVIEW VistaPoint Views 410

Part 4. MAINVIEW Alternate Access Security 411

Chapter 16. Defining Security for MAINVIEW Alternate Access 413
Understanding AutoLogon Session Security Issues. 413
Defining Additional Security for Terminals. 414
Defining Additional Security for Applications 415
Configuring CA-ACF2 for MAINVIEW Alternate Access 416
Customizing Class TERMINAL Access Authorization for CA-ACF2 419
Customizing Class APPL Access Authorization for CA-ACF2 419
Configuring RACF for MAINVIEW Alternate Access 421
Customizing Class TERMINAL Access Authorization for RACF. 422
Customizing Class APPL Access Authorization for RACF 422
Configuring CA-TOP SECRET for MAINVIEW Alternate Access 423
Customizing Class TERMINAL Access Authorization for CA-TOP SECRET. 424
Customizing Class APPL Access Authorization for CA-TOP SECRET 425

Part 5. Appendixes 427

Appendix A. BMC Software Proprietary Security. 429
Migrating from BMC Software Proprietary Security. 429
Using BMC Software Proprietary Security 431
RACF Security Requirements. 431
Authorizing Users 432
Verifying User Command Authorization 435
BBPARM Authorization Member Parameters 438
USERID Parameters for the BBI-SS PAS Environment. 438
USERID Parameters for MAINVIEW AutoOPERATOR Only 439
USERID Parameters for MAINVIEW for CICS, MAINVIEW for DB2, and MAINVIEW for DBCTL 440
USERID Parameters for MAINVIEW AutoOPERATOR, MAINVIEW for CICS, MAINVIEW for DB2, and MAINVIEW for DBCTL 441
USERID Parameters for MAINVIEW for DB2 Only. 442

Appendix B. Basic Security Problem Determination. 443
Before You Contact Customer Support 443
MAINVIEW AutoOPERATOR Advanced Security 445
MAINVIEW AutoOPERATOR and MAINVIEW SYSPROG Services. 446
MAINVIEW for CICS 447

Appendix C. Default Parameters for Enhanced Security 449
Default Parameter Definitions 449
Manually Creating a Parameter Definition Member. 449
Understanding Parameter Definitions 450
Default Class Definitions 459
Changing and Adding Classes. 459
Manually Creating a Class Definition Member 459
Understanding Class Definitions. 459
Understanding the NEXT= Parameter 472
Transformation List Values for the INTENT= Parameter. 473

Index 475

Figures

1. MAINVIEW Library xix
1. Sample BBSEC Member 113
2. Sample Job for Executing BBXSAF00 121
3. Password Utility JCL 124
4. Sample Password Utility Control Statements 125
5. Sample Password Utility Output 125
6. EZSEC View 139
7. SERDEFOV View and Default Resource Definitions 139
8. SERDEFEX View and Individual Resource Definitions 140
9. Example of Source Code for the RACF ICHRRCDE Table 156
10. Example of Source Code for the RACF ICHRFR01 Table 157
11. SECDEFL View 167
12. SECDEF View 170
13. SECDEFD View 171
14. CHANGE SECURITY CLASS DEFINITION Dialog 172
15. SECURITY CLASS DEFINITION Dialog 172
16. ADD SECURITY CLASS DEFINITION Dialog 173
17. SEPDEFL View 178
18. SEPDEFD View 179
19. CHANGE SECURITY PARAMETERS Dialog 180
20. SECURITY PARAMETERS DEFINITION Dialog 181
21. SERDEFL View in Plex Manager 186
22. SERDEFOV View 189
23. SERDEFEX View 190
24. SERDEFE View 190
25. CHANGE RESOURCE AUTHORIZATION DEFINITION Dialog 192
26. SECURITY RESOURCE DEFINITION PARAMETER MEMBER Dialog 193
27. User Authorization 432
28. Default BBMTSS Parameter Definition Member 450
29. Partial Default BBMTSP00 Class Definition Member 460

Tables

1. Resources for AAO, CMR, DBCTL, DMR, FOCAL, and MVIMS 17
2. Resources for MAINVIEW SYSPROG Services 24
3. CICS Action Services 34
4. List of Features for MAINVIEW AutoOPERATOR Advanced Security 48
5. MAINVIEW AutoOPERATOR Resources: Application-Level Security 50
6. MAINVIEW AutoOPERATOR Resources: Command-Level Security 57
7. CICS Display Services 61
8. MAINVIEW for CICS Diagnostic Services 68
9. MAINVIEW for DB2 Resources: Command-Level Security 69
10. MAINVIEW Total Object Manager (TOM) Resources 70
11. MAINVIEW AutoOPERATOR Security CLISTs. 107
12. CSMON function Qualifiers 123
13. Settings for CA-ACF2 Global System Options. 146
14. Resource Definitions Common to All MAINVIEW Products 198
15. Resource Definitions for Plex Manager. 206
16. Resource Definitions for CMF MONITOR and MAINVIEW for OS/390 215
17. Resource Definitions for MAINVIEW Alarm Manager - Alarm Administration . . . 234
18. Resource Definitions for MAINVIEW Alarm Manager - Alert Management 237
19. Resource Definitions for MAINVIEW Explorer. 239
20. Resource Definitions for MAINVIEW for CICS 241
21. Resource Definitions for MAINVIEW for DATA ACCELERATOR Compression . . 263
22. Resource Definitions for MAINVIEW for DB2 265
23. Resource Definitions for MAINVIEW for IMS Online and MAINVIEW for DBCTL 269
24. Resource Definitions for MAINVIEW for IP 279
25. Resource Definitions for MAINVIEW for Linux – Servers. 283
26. Resource Definitions for MAINVIEW for UNIX System Services 289
27. Resource Definitions for MAINVIEW for VTAM 296
28. Resource Definitions MAINVIEW for WebSphere Application Server 298
29. Resource Definitions for MAINVIEW for WebSphere MQ 301
30. Resource Definitions for MAINVIEW for WebSphere MQ Integrator. 320
31. Resource Definitions for MAINVIEW SRM Common Resources. 324
32. Resource Definitions for MAINVIEW SRM Reporting 334
33. Resource Definitions for MAINVIEW SYSPROG Services - MVSPS Service Point 363
34. Resource Definitions for MAINVIEW SYSPROG Services - MVCSMON Service Point 366
35. Resource Definitions for MAINVIEW VistaPoint 367
36. Common Views 369
37. Plex Manager Views 370
38. CMF MONITOR and MAINVIEW for OS/390 Views. 371
39. MAINVIEW Alarm Manager - Alarm Administration Views 378
40. MAINVIEW Alarm Manager - Alert Management Views 379
41. MAINVIEW Explorer Views 379
42. MAINVIEW for CICS Views 380
43. MAINVIEW for DATA ACCELERATOR Compression Views. 384
44. MAINVIEW for DB2 Views. 385
45. MAINVIEW for IMS Online and MAINVIEW for DBCTL Views. 386
46. MAINVIEW for IP Views. 389
47. MAINVIEW for Linux – Servers Views. 392
48. MAINVIEW for UNIX System Services Views 394

49. MAINVIEW for VTAM Views 397
50. MAINVIEW for WebSphere Application Server Views 398
51. MAINVIEW for WebSphere MQ Views 400
52. MAINVIEW for WebSphere MQ Integrator Views 401
53. MAINVIEW SRM Common Views 403
54. MAINVIEW SRM EasyHSM Views 405
55. MAINVIEW SRM SG-Control Views 407
56. MAINVIEW SRM StorageGUARD Views 407
57. MAINVIEW SYSPROG Services Views 410
58. MAINVIEW VistaPoint Views 410
59. Target Authorization Keywords for BBPARM User ID Members 433
60. BBPARM Member USERID Parameters for BBI-SS PAS 438
61. BBPARM Member USERID Parameters for MAINVIEW AutoOPERATOR 439
62. BBPARM Member USERID Parameters for MAINVIEW for CICS, MAINVIEW for DB2, and MAINVIEW for DBCTL 440
63. BBPARM Member USERID Parameters for MAINVIEW AutoOPERATOR, MAINVIEW for CICS, MAINVIEW for DB2, and MAINVIEW for DBCTL 441
64. BBPARM Member USERID Parameters MAINVIEW for DB2 Only 442
65. Default Security Parameter Definitions 451
66. Default Class Definitions 461
67. Access Intent Interpretations by the ESM, for a Transformation 473
68. Access Intent Interpretations for Level1 473

About This Book

This book describes how to implement MAINVIEW security with your external security manager (ESM) to protect MAINVIEW product resources from user access. It is intended for the system administrator who needs to know how to secure MAINVIEW resources.

How This Book Is Organized

Read those chapters that apply to the MAINVIEW products you intend to secure.

- **Part 1: Introduction**

  This part describes the different types of security used to secure MAINVIEW products and explains which products use which types of security.

- **Part 2: Basic Security**

  This part contains chapters that describe basic security and the steps for protecting MAINVIEW products using this type of security. To determine if your MAINVIEW product requires basic security, see “Types of Security” on page 3. For a definition of basic security, see “Basic Security” on page 4.

- **Part 3: Enhanced Security**

  This part contains chapters that describe enhanced security and the steps for protecting MAINVIEW products using this type of security. To determine if your MAINVIEW product supports enhanced security, see “Types of Security” on page 3. For a definition of enhanced security, see “Enhanced Security” on page 4.

- **Part 4: MAINVIEW Alternate Access Security**

  This part contains chapters that describe how to protect MAINVIEW Alternate Access resources.

- **Part 5: Appendixes**

  This part contains

  – Appendix A, “BMC Software Proprietary Security”
  – Appendix B, “Basic Security Problem Determination”
  – Appendix C, “Default Parameters for Enhanced Security”
  – Index

Notation Conventions

The following symbols define command syntax and should never be typed:

- Brackets [ ] enclose optional parameters or keywords.
- Braces { } enclose a list of parameters; one must be chosen.
- A line | separates alternative options; one can be chosen.
- An underlined parameter is the default.
- An ITEM IN CAPITAL LETTERS indicates exact characters; usage can be all uppercase or lowercase.
- Items in *italicized, lowercase* letters are values that you supply.
- Commands in uppercase and lowercase letters, such as HSplit, show the command abbreviation by uppercase letters (HS, for example); lowercase letters complete the entire command name as an optional entry.

  Commands that do not have an abbreviation are in all uppercase letters, such as END.

Recommended Documentation

You may want to refer to the following documentation for more product information:

For information about	**See**
CA-ACF2	*CA-ACF2 MVS Administrator Guide* *CA-ACF2 MVS General Information Guide* *CA-ACF2 MVS Systems Programmer Guide* *CA-ACF2 MVS Implementation Planning Guide*
CA-TOP SECRET	*CA-TOP SECRET MVS Planning Guide* *CA-TOP SECRET MVS Control Options Guide* *CA-TOP SECRET MVS TSS Command Functions Guide* *CA-TOP SECRET MVS Implementation: General Guide* *CA-TOP SECRET MVS Implementation: Batch and STC Guide* *CA-TOP SECRET MVS Implementation: TSO Guide* *CA-TOP SECRET MVS General Concepts Guide*
RACF	*RACF Command Language Reference* *RACF Security Administrator's Guide* *RACF General User's Guide* *RACF General Information*
VTAM	*VTAM Installation and Resource Definition* *VTAM Messages and Codes* *VTAM Operation*
MAINVIEW Alternate Access	*MAINVIEW Alternate Access Implementation and User Guide*

MAINVIEW Library

The MAINVIEW product family includes the following products:

- CMF MONITOR
- InTune
- MAINVIEW AutoOPERATOR
- MAINVIEW Explorer
- MAINVIEW FOCAL POINT
- MAINVIEW for CICS
- MAINVIEW for DB2
- MAINVIEW for DBCTL
- MAINVIEW for IMS Offline
- MAINVIEW for IMS Online
- MAINVIEW for IP
- MAINVIEW for Linux – Servers
- MAINVIEW for OS/390
- MAINVIEW for UNIX System Services (USS)
- MAINVIEW for VTAM
- MAINVIEW for WebSphere Application Server
- MAINVIEW for WebSphere MQ (formerly known as MAINVIEW for MQSeries)
- MAINVIEW Storage Resource Manager (SRM)
- MAINVIEW SYSPROG Services
- MAINVIEW VistaPoint

Each of these products provides a product-specific library that typically includes getting started, customization, user, and reference books.

In addition to those books, there are several books and quick references that provide general information common to all or many MAINVIEW products. Those books are listed and described in the following table.

OS/390 and z/OS Installer Guide	provides information about the installation of BMC Software products on OS/390 and z/OS systems.
MAINVIEW Installation Requirements Guide	provides information on installation requirements such as software requirements, storage requirements, and system requirements.
MAINVIEW Common Customization Guide	provides instructions for manually customizing the MAINVIEW environment for your products.
MAINVIEW Alarm Manager User Guide	explains how to create and install alarm definitions that indicate when exceptions occur in a sysplex.
MAINVIEW Alternate Access Implementation and User Guide	explains how to configure, start, and stop VTAM and EXCP AutoLogon sessions to access MAINVIEW products without an active TSO subsystem.
Implementing Security for MAINVIEW Products	explains basic MAINVIEW security, enhanced security, and MAINVIEW Alternate Access security.
MAINVIEW Administration Guide	provides information on MAINVIEW operations, targets, single-system image contexts, MAINVIEW Alarm Manager, data sets, view customization, and diagnostic facilities.
MAINVIEW Quick Reference	introduces the MAINVIEW family of products and lists the commands used to manage the MAINVIEW windows environment.
Using MAINVIEW	provides information on working with MAINVIEW products in windows mode and full-screen mode.

Note: MAINVIEW messages are documented in the Messages and Codes online display, which you can access by typing MSG on the COMMAND line of any MAINVIEW display.

Figure 1 on page xix shows the documentation for MAINVIEW products and its intended use.

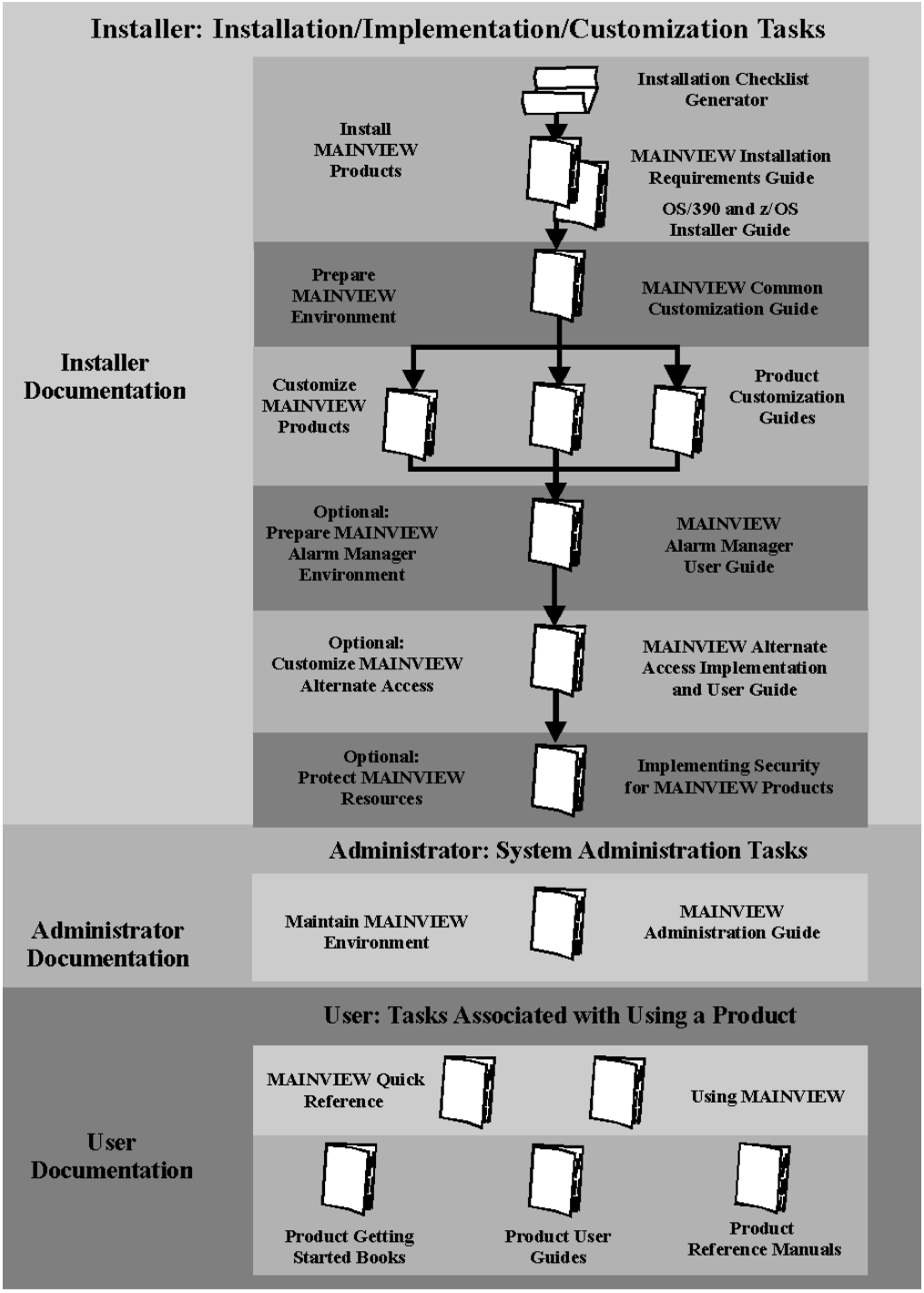

Figure 1. MAINVIEW Library

Part 1. Introduction

This part describes the different types of security used to secure MAINVIEW products and explains which products use which types of security.

Chapter 1. Introduction to MAINVIEW Security 3
Types of Security 3
Basic Security 4
Enhanced Security 4
MAINVIEW Alternate Access Security 5

Chapter 1. Introduction to MAINVIEW Security

This chapter explains the differences between the various types of security available for MAINVIEW products.

Types of Security

There are three types of security for MAINVIEW products:

- basic security
- enhanced security
- MAINVIEW Alternate Access security

The type or types of security you implement depend on what products you have installed and how you access them.

MAINVIEW products can operate in windows mode, full-screen mode, or both. When operating in windows mode, one or more windows are displayed on your screen. When operating in full-screen mode, the product application or service is displayed on your entire screen. Some products run only in full-screen mode; some run only in windows mode; and some run in both modes.

MAINVIEW products that operate only in full-screen mode use only basic security. Products that operate only in windows mode use only enhanced security. Products that operate in both full-screen and windows mode use both basic and enhanced security.

MAINVIEW Alternate Access, which provides access to products through VTAM and EXCP interfaces without an active TSO subsystem, requires its own security. Security for MAINVIEW Alternate Access is independent of basic or enhanced product security.

Products That Use Only Basic Security

The following products operate only in full-screen mode and use only basic security:

MAINVIEW AutoOPERATOR
MAINVIEW FOCAL POINT

Products That Use Only Enhanced Security

The following products operate only in windows mode and use only enhanced security:

CMF Monitor
MAINVIEW Alarm Manager
MAINVIEW Explorer
MAINVIEW for DATA ACCELERATOR Compression
MAINVIEW for IP
MAINVIEW for Linux – Servers
MAINVIEW for OS/390
MAINVIEW for UNIX System Services
MAINVIEW for VTAM
MAINVIEW for WebSphere Application Server

MAINVIEW for WebSphere MQ (formerly known as MAINVIEW for MQSeries)
MAINVIEW Storage Resource Manager (SRM)
MAINVIEW VistaPoint

Products That Use Basic and Enhanced Security

The following products operate in both full-screen and windows mode and use both basic and enhanced security:

MAINVIEW for CICS
MAINVIEW for DB2
MAINVIEW for DBCTL
MAINVIEW for IMS Online
MAINVIEW SYSPROG Services and COMMON STORAGE MONITOR

Basic Security

The three types of security have different characteristics. Basic security

- uses the standard MVS SAF RACROUTE AUTH calls to communicate with your external security manager
- supports RACF, CA-ACF2, and CA-Top Secret
- uses the security class name $BOOLE by default; however, you can use any security class
- uses fixed, predefined resource names to identify MAINVIEW resources
- requires that you define resources to your ESM and grant or deny access to them
- is administered outside of MAINVIEW using the BBSEC member in the logical parmlib concatenation

To implement basic security, see "Introduction to Basic Security" on page 9.

Enhanced Security

Unlike basic security, enhanced security

- uses the standard MVS SAF interface to communicate with your external security manager
- supports RACF, CA-ACF2, CA-Top Secret, or any SAF-compliant security interface
- fulfills the requirements for United States Department of Defense B1 security
- uses the security class name FACILITY by default; however, you can use any security class
- uses customized resource names to identify MAINVIEW resources
- requires that you define resources to your ESM and grant or deny access to them
- is administered through MAINVIEW security views (EZSEC, EZSECRES, SECDEF, SEPDEF, SERDEF, SERDEFP, SERDEPC, SERDEFOV, and SERDEFEX)

- stores security definition members in a security parameter library

  This library is referenced by the BBSECURE DD statement in the CAS and PAS started task procedures. The members in the library are read during CAS and PAS initialization to establish security.

- provides group resource definitions

  Resources included in a group definition inherit the security characteristics of that group, making it easy to define one resource definition that effects dozens or hundreds—even thousands— of resources. The security characteristics of individual resources in a group resource definition can be further defined as needed.

To implement enhanced security, see "Introduction to Enhanced Security" on page 131.

MAINVIEW Alternate Access Security

MAINVIEW Alternate Access provides VTAM and EXCP interfaces to ISPF for accessing MAINVIEW products, without requiring an active TSO subsystem. MAINVIEW Alternate Access uses the standard MVS SAF interface to communicate with your external security manager (ESM) and requires that each user ID for a session be defined to your ESM.

To implement MAINVIEW Alternate Access security, see Chapter 16, "Defining Security for MAINVIEW Alternate Access" on page 413.

Note: MAINVIEW Alternate Access security is independent of basic or enhanced product security. The information in this book related to basic and enhanced security does not apply to MAINVIEW Alternate Access.

Part 2. Basic Security

This part describes basic security and the steps that users of MAINVIEW products requiring basic security should take to secure their products.

Chapter 2. Introduction to Basic Security 9
Controlling Access to Your MAINVIEW Product 9
More MAINVIEW Product Functions to Secure 9
Creating Global Security Definitions 10
Using Features of Your External Security Manager 10
What Is Required for Basic Security? 11
Phase 1: Reviewing the Resources for the Products You Want to Secure 11
Phase 2: Determining a Naming Convention 12
Phase 3: Activating Security 12

Chapter 3. Reviewing Product Resources 13
Resource Naming Conventions 13
MAINVIEW AutoOPERATOR, MAINVIEW FOCAL POINT, MAINVIEW for CICS, MAINVIEW for DB2, MAINVIEW for DBCTL, MAINVIEW for IMS Online 13
MAINVIEW Total Object Manager (TOM) 14
MAINVIEW SYSPROG Services and COMMON STORAGE MONITOR 15
Resources Used by Multiple Products 16
Resources Common to MAINVIEW AutoOPERATOR, MAINVIEW FOCAL POINT, MAINVIEW for CICS, MAINVIEW for DB2, MAINVIEW for DBCTL, and MAINVIEW for IMS Online 16
Resources Common to MAINVIEW SYSPROG Services, MAINVIEW AutoOPERATOR, and MAINVIEW for OS/390 23
Resources Common to MAINVIEW for CICS and the MAINVIEW AutoOPERATOR for CICS Option 34
Resources for CMF MONITOR 48
Resources for MAINVIEW AutoOPERATOR: Advanced Security 48
Resources for MAINVIEW AutoOPERATOR Applications: (FEATURE=APPL) 50
Resources for MAINVIEW AutoOPERATOR Commands and Transactions: (FEATURE=CMD) 56
Resources for MAINVIEW AutoOPERATOR ALERTs: (FEATURE=ALRT) 59
Resources for MAINVIEW AutoOPERATOR EXECs: (FEATURE=EXEC) 59
Resources for MAINVIEW AutoOPERATOR Parameter Data: (FEATURE=PARM) . . 60
Resources for MAINVIEW FOCAL POINT, MAINVIEW for DBCTL, and MAINVIEW for IMS Online 61
Resources for MAINVIEW for CICS 61
Resources for MAINVIEW for DB2 69
Resources for MAINVIEW Total Object Manager (TOM) 70
Access through an EXCP Terminal 79

Chapter 4. Configuring Your ESM for Basic Security 81
Defining Security Class $BOOLE 81
Defining MAINVIEW Product Resources to Protect 82
Authorizing Access 82
Example: Securing MVS Commands for All Users 83
Example: Allowing All Users to Send Messages to the BBI-SS PAS Journal 83
Example: Allowing Mixed Accessibility 84
Identifying MAINVIEW SYSPROG Services 84

Granting or Denying Access 85
Granting Access 85
Denying Access 86
Creating Global Security Definitions: Using Generics 86
Listing MAINVIEW Product Resource Names 87

Chapter 5. Using CLISTs to Identify Resources 105
Creating Resource Names for MAINVIEW Products. 106
Migrating Existing Resource Names for MAINVIEW Products 106
Creating Resource Names for MAINVIEW AutoOPERATOR 107
Creating Resource Names for CICS Resources. 108
Creating Resource Names for MAINVIEW for DB2 CMD-Level Security: DB2CMDDF and DB2CMDPE 109

Chapter 6. Activating Basic Security 111
Creating the Basic Security Member BBSEC 112
BBSEC Syntax 112
BBSEC TYPE= Statement 113
BBSEC Examples. 117
Adding BBSEC to BBPARM or the Logical Parmlib 118
Disabling Basic Security 119

Chapter 7. Securing SYSPROG and CSMON Services 121
Activating Changes to BBSEC by Executing BBXSAF00 121
Determining the Function Qualifier for SYSPROG Resource Names 122
Using an Exit to Modify the Function Qualifier in SYSPROG Resource Names. 122
Determining the Function Qualifier for CSMON Resource Names 123
Using the Password Utility 123
Password Utility JCL 124
Password Utility Return Codes 125

Chapter 2. Introduction to Basic Security

This chapter describes how to plan for and implement security with your external security manager (ESM) for the following MAINVIEW products and components:

- MAINVIEW AutoOPERATOR
- MAINVIEW FOCAL POINT
- MAINVIEW for CICS
- MAINVIEW for DB2
- MAINVIEW for DBCTL
- MAINVIEW for IMS Online
- MAINVIEW SYSPROG Services and COMMON STORAGE MONITOR

The remainder of this chapter describes implementing basic security for your MAINVIEW products using RACF as the ESM.

Note: The information in this chapter does not apply to MAINVIEW Alternate Access. To implement MAINVIEW Alternate Access security, see "Defining Security for MAINVIEW Alternate Access" on page 413.

Controlling Access to Your MAINVIEW Product

Using basic security enables you to specify

- which actions or commands can be performed
- which data is available to view
- on which BBI-SS PAS the feature can be accessed or the action performed
- on which targets the feature can be accessed or the action performed
- whether security checking can be performed only once per resource during an Application or Cycle Refresh session

For example, a resource might be an action such as accessing a certain application or issuing MVS commands. To secure a user's ability to issue MVS commands, you can specify

- which user IDs can issue MVS commands
- in which BBI-SS PAS MVS commands can be invoked
- to which targets MVS commands can be directed

Some MAINVIEW products allow you to secure many resources. Determining how you want to secure these resources requires careful planning. Refer to Chapter 3, "Reviewing Product Resources" on page 13 for more information about what you can secure.

More MAINVIEW Product Functions to Secure

Many MAINVIEW products allow you to create security for more of the products' functions than was previously possible with BMC Software proprietary security. For example, in MAINVIEW AutoOPERATOR, you can implement advanced security features that allow you to secure who can access specific applications, issue commands, and even who can schedule individual EXECs by EXEC name.

Potentially, added security might mean more work and planning. As an example, if you decide to implement the advanced security feature in MAINVIEW AutoOPERATOR that secures EXECs by EXEC name, you will have to review all the EXECs in your library and then decide which user ID will have access to which EXECs, on which BBI-SS PASs.

For more information, refer to the sections in Chapter 3, “Reviewing Product Resources” on page 13, that describe the functions of a product you can secure.

Creating Global Security Definitions

If your ESM supports using generics and your security scheme allows it, securing MAINVIEW products through the ESM will allow you to use generics in naming MAINVIEW product resources to create global security definitions. This can be accomplished by defining an entire set of resources that will be available either to a select group of users or to all users. For example, you may allow all users to display applications, but only a subset of users to update them.

You can identify a group of users who will have access to all areas of a product. For example, system administrators may need to be to able perform all functions in all areas, but operators can perform their jobs without needing access to all areas. Creating global security definitions can make this process simpler to perform.

Refer to “Creating Global Security Definitions: Using Generics” on page 86 for information about using generics for your security system.

Using Features of Your External Security Manager

You might also consider how to best use security features offered by your ESM. For example, your ESM may offer auditing functions that you can turn on to track the usage of resources. In instances where security is a high priority, messages that record violation attempts can be routed to a line terminal or console for immediate notification. Refer to your ESM documentation for information on the various security features offered.

What Is Required for Basic Security?

Implementing basic security for the MAINVIEW AutoOPERATOR, MAINVIEW FOCAL POINT, Mainview for CICS, MAINVIEW for DB2, MAINVIEW for DBCTL, MAINVIEW for IMS Online, and MAINVIEW SYSPROG Services is a three-phase process:

- In the first phase, begin by examining the resources available within each product. A resource is anything you can protect, and includes such things as opening a database or executing a command.

  Note that security for these products is accomplished on a subsystem (BBI-SS PAS) by subsystem basis. Therefore, you may decide that one BBI-SS PAS warrants more security than another; for example, a test BBI-SS PAS may have less security requirements than a production BBI-SS PAS.

  In addition, some products provide greater control over how the product is secured and what can be secured. Become familiar with your product so you can determine the most beneficial security to implement for your site.

- Once you have determined what to secure, the second phase consists of learning how resources are named and defined.

  Creating names for BBI-SS PAS product resources allows you to specify for which targets the resources are secured.

  The first two phases require mostly planning and examining how a MAINVIEW product needs to be secured at your site. Once these phases are complete, the third phase is relatively simple to complete.

- The third phase involves creating a security class in the ESM to identify the resources to the ESM, grant or deny access to a resource, and turn security on.

The following sections provide a brief overview of the tasks you need to complete to implement basic security with your ESM.

Phase 1: Reviewing the Resources for the Products You Want to Secure

Regardless of which MAINVIEW products (or how many) you are implementing security for, your first task should be to review the resources for each product you are going to secure.

Some resources, once secured for one product, are secured for other products as well. For example, if you secure certain resources for MAINVIEW AutoOPERATOR, these resources are also secured for MAINVIEW for CICS, MAINVIEW for DB2, MAINVIEW for IMS Online, and so on.

The resources available for security are listed by each product, in alphabetical order in Chapter 3, “Reviewing Product Resources”. To aid you, “Listing MAINVIEW Product Resource Names” on page 87 provides a matrix, listing each resource and which products use it. This way, you can establish easily how securing a specific resource for one product might affect your other products.

Phase 2: Determining a Naming Convention

This step requires that you plan your security for products on a BBI-SS PAS by BBI-SS PAS basis. The subsystem name is part of the resource name and determines the BBI-SS PAS for which the particular resource is secured.

For example, you may decide to limit users that have update access to the MAINVIEW AutoOPERATOR Rules Processor application on your production BBI-SS PAS, but allow everyone to have update access on your test BBI-SS PAS. In this case, you would have two resource names, one for each BBI-SS PAS. Each of these resource names must be identified to the ESM so you can begin specifying who or what group of users can access each resource.

Chapter 3, “Reviewing Product Resources” on page 13, has complete information about naming conventions and how they affect your security scheme.

Users of products that require enhanced security may also want to adapt a convention compatible with both basic and enhanced security.

Phase 3: Activating Security

Once you have determined which resources to secure and understand how to use the naming convention, you need to

- create a security class in the ESM for your MAINVIEW products
- identify the fully named resources to the ESM
- grant or deny access to the resources
- turn on security

Chapter 5, “Using CLISTs to Identify Resources” on page 105 explains how use BMC Software-supplied CLISTs to help you with naming your resources. Chapter 6, “Activating Basic Security” on page 111 explains how to activate security.

Chapter 3. Reviewing Product Resources

This chapter explains the naming convention for resource names and lists all the resources, alphabetically by product, that you can secure through the ESM installed at your site.

Resource Naming Conventions

This section describes the resource naming conventions. The naming conventions are different for different products.

MAINVIEW AutoOPERATOR, MAINVIEW FOCAL POINT, MAINVIEW for CICS, MAINVIEW for DB2, MAINVIEW for DBCTL, MAINVIEW for IMS Online

Resource names for these products are defined on a BBI-SS PAS by BBI-SS PAS basis. The subsystem name is part of the resource name and determines the BBI-SS PAS for which the resource is secured. You must specify the BBI-SS PAS and target when defining a resource to your ESM.

The resource naming convention for these products is

prefix.ssid.product.target.suffix

When creating permits, profiles, and rules to control access to resources, an explicit or generic value can be specified for any qualifier in the resource name by using the masking characters supported by the ESM. For example, an explicit resource name might look like this:

```
BBM.BBCS.AAO.TARGET01.RULEREAD
```

A generic resource name with a RACF wildcard (*) used in the *ssid* qualifier might look like this:

```
BBM.BB*.CICS.TARGET02.CONNECT.SESSIONS
```

The resource name qualifiers are as follows:

prefix	The 1- to 8-character prefix that is used for all resource names. If you do not specify a prefix, the default prefix of BBM is added to all resource names automatically.
ssid	The 1- to 4-character subsystem ID of the BBI-SS PAS for which the resource is to be secured. The SSIDs are specified in BBPARM member BBIJNT00. You must include the SSID in the resource name.

product One of the following product abbreviations:

BBI	Common resources
AAO	MAINVIEW AutoOPERATOR resources
CMR	MAINVIEW for CICS resources
DBCTL	MAINVIEW for DBCTL resources
DMR	MAINVIEW for DB2 resources
FOCAL	MAINVIEW FOCAL POINT resources
MVIMS	MAINVIEW for IMS Online resources

target The 1- to 8-character target name (as displayed in the right corner of a MAINVIEWfull-screen session panel) that specifies to which target the action is directed. All valid target names are listed in BBPARM member BBIJNT00. You must include the target name in the resource name.

suffix A predefined suffix that represents the actual function the resource represents. The remainder of this chapter lists the resource names, including the suffix for each resource. The suffix can consist of a BMC Software-supplied portion and a user-specified portion.

MAINVIEW Total Object Manager (TOM)

Resource names for TOM services are defined by Cross-System Coupling Facility (XCF) group name. The XCF group name, which is defined in TOMPARM member XCFDEF00, is part of each resource name and uniquely identifies a family of related TOM address spaces.

The resource naming convention for MAINVIEW Total Object Manager (TOM) is

*prefix.xcfgroup.*TOM*.function*

When creating permits, profiles, and rules to control access to resources, an explicit or generic value can be specified for any qualifier in the resource name by using the masking characters supported by the ESM. For example, an explicit resource name might look like this:

```
BBM.BMCTOM.TOM.OBJ.ACTIVATE
```

A generic resource name with a RACF wildcard (*) used in the *xcfgroup* qualifier might look like this:

```
BBM.BMC*.TOM.API.LIST
```

The resource name qualifiers are as follows:

prefix The 1- to 8-character prefix that is used for all resource names. If you do not specify a prefix, the default prefix of BBM is added to all resource names automatically.

xcfgroup The 1- to 8-character name of the XCF group for which the resource is to be secured.

function The name of the TOM function to be secured. The remainder of this chapter lists the resource names, including the name for each function.

MAINVIEW SYSPROG Services and COMMON STORAGE MONITOR

The resource naming convention for MAINVIEW SYSPROG Services and COMMON STORAGE MONTIOR services is

prefix.sysid.product.service.function

When creating permits, profiles, and rules to control access to resources, an explicit or generic value can be specified for any qualifier in the resource name by using the masking characters supported by the ESM. For example, an explicit resource name might look like this:

```
BBM.SYSA.RESOLVE.AUTHTSO.LIST
```

A generic resource name with a RACF wildcard (*) used in the *sysid* qualifier might look like this:

```
BBM.SYS*.RESOLVE.DEALLOC.UPDATE
```

The resource name qualifiers are as follows:

prefix The 1- to 8-character prefix that is used for all resource names. If you do not specify a prefix, the default prefix of BBM is added to all resource names automatically.

sysid The SYSNAME (or SMFID) of the system where the service is to be executed.

product The name of the product issuing the request (RESOLVE for MAINVIEW SYSPROG Services or CSMON for COMMON STORAGE MONITOR).

service The name of the service to be executed.

function One of the following values:

- LIST — for services that display information
- UPDATE — for services that update system resources
- *user-defined* — For MAINVIEW SYSPROG Services, the function qualifier can be modified by a user exit as described on page 122.

Some services perform either a list or an update function depending on the service operands specified by the user. Table 2 on page 24 lists the resource name or names for each service.

You may want to consider denying access to all requests with a function qualifier of UPDATE. You can then make exceptions for specific users or groups of users on a service-by-service basis.

Resources Used by Multiple Products

Some BMC Software products share resources. For example, if you have MAINVIEW for CICS and the MAINVIEW AutoOPERATOR for CICS option, securing MAINVIEW for CICS resources also secures those same resources in MAINVIEW AutoOPERATOR.

The sections below describe which resources affect multiple products.

Resources Common to MAINVIEW AutoOPERATOR, MAINVIEW FOCAL POINT, MAINVIEW for CICS, MAINVIEW for DB2, MAINVIEW for DBCTL, and MAINVIEW for IMS Online

If you have any of the following products, or a combination of these products, use the information in this section to determine how securing a resource in one product might affect another product:

Product	Abbreviation
MAINVIEW AutoOPERATOR	AAO
MAINVIEW FOCAL POINT	FOCAL
MAINVIEW for CICS	CMR
MAINVIEW for DBCTL	DBCTL
MAINVIEW for DB2	DMR
MAINVIEW for IMS Online	MVIMS
Common resources	BBI

Not all resources are applicable to all products, so the third column in the following table lists which products use this resource.

If you plan to implement security for any of these products, the resources listed in this table must be secured before you can implement security within each individual product.

For an explanation of the resource naming convention used in this table, see page 13.

Table 1. Resources for AAO, CMR, DBCTL, DMR, FOCAL, and MVIMS

To protect this resource	Use this resource name	Affects products
Accessing a BBI target	Accessing a specific target or targets. **Resource Name:** *prefix.ssid*.BBI.*target*.ACCESS **Note:** Securing this resource is a prerequisite to implementing security for any other resource in this table. Access to the BBI-SS PAS (or target) is always checked before access to a specific product resource is checked.	AAO CMR DBCTL DMR MVIMS FOCAL
Issuing BBI control commands	Issuing BBI control commands such as .RESET, .CANCEL, .STOP, .START. **Resource Name:** *prefix.ssid*.BBI.*target*.BBICMD	AAO CMR DBCTL DMR MVIMS
Writing messages to the BBI Journal log	Writing messages to BBI Journal log. **Resource Name:** *prefix.ssid*.BBI.*target*.JRNLMSG	AAO CMR DBCTL DMR MVIMS
Resource checking during Application and Cycle Refresh	Allows the BBI-SS PAS to have security verification of resources be remembered for the life of an Application or Cycle Refresh session, until the refresh session is stopped. Defining this resource can reduce overall CPU consumption during a refresh session. Normally, a security verification call is made for every invocation of an application during Application or Cycle Refresh. By defining the REFRESH resource and granting the PAS user ID READ access to it, authorization for the application will be remembered for the life of the refresh session. If security verification fails, the failed verification will also be remembered and the error message NOT AUTHORIZED will be issued each time the application panel is redisplayed. **Resource Name:** *prefix.ssid*.BBI.*target*.REFRESH	AAO CMR DBCTL DMR MVIMS FOCAL
Dynamic data set allocation of trace log data sets	Granting access to this resource allows the BBI-SS PAS to allocate trace log data sets dynamically for this user. Denying access specifies that the BBI-SS PAS is not to allocate the trace log data sets. Trace logging can be requested only if trace log data sets are preallocated. If access is denied and a trace log data set does not exist, a request for trace logging will fail. **Note:** Only a DISPOSITION of OLD is accepted for trace log data set allocation if access is denied. **Resource Name:** *prefix.ssid*.BBI.*target*.TRALLOC	CMR DMR MVIMS DBCTL

Table 1. Resources for AAO, CMR, DBCTL, DMR, FOCAL, and MVIMS (Continued)

To protect this resource	Use this resource name	Affects products
Modifying and/or purging all service requests, including those started by other users	Identifies whether you can modify and/or purge service requests, including those made by other users (for example, purging a monitor or trace). You can use a number or pound sign (#) with this resource name: `PMACC=#` Provides user access and changes authority (free, modify, purge, quiesce, reset, stop, switch) for all services, including those started by other users. **Note:** This is recommended for the system administrator. **Resource Name:** *prefix.ssid*.BBI.*target*.PMACC#	CMR DBCTL DMR MVIMS

Accessing service classes A through Z	Identifies which analyzer and monitor service classes you can access. If SERVLIST=RESTRICT is specified in BBPARM member BBIISP00, this parameter also restricts the services displayed on the analyzer and monitor service lists.
	
	The following values can be specified with this resource name:
	
	• Class codes A to Z
	
	`PMACC=ABC`
	
	Provides access to service classes A through Z. (Services default to class A. The default can be modified in BBPARM member IMFSTD00.)
	
	• An asterisk (*)
	
	`PMACC=*`
	
	Provides access to all services.
	
	Resource Name:
	prefix.ssid.BBI.target.PMACCA
	prefix.ssid.BBI.target.PMACCB
	...
	prefix.ssid.BBI.*target*.PMACCZ
		CMR
		DBCTL
		DMR
		MVIMS

Starting a summary application trace	Starting a summary trace (accounting). **Resource Name:** *prefix.ssid*.BBI.*target*.TRACE.S	CMR DBCTL DMR MVIMS
Starting a summary or detail application trace	Starting a summary trace plus detail trace with SQL events. **Resource Name:** *prefix.ssid*.BBI.*target*.TRACE.D	CMR DBCTL DMR MVIMS

Table 1. Resources for AAO, CMR, DBCTL, DMR, FOCAL, and MVIMS (Continued)

To protect this resource	Use this resource name	Affects products
Starting a summary or detail application trace (with all events for MAINVIEW for DB2)	Starting a detail trace plus scans, I/Os, locks, and DDF detail event tracing. **Resource Name:** *prefix.ssid*.BBI.*target*.TRACE.ALL TRACE.ALL supersedes TRACE.S or TRACE.D.	DMR CMR MVIMS
Starting a DB2 application trace for the total workload (DB2AUTH = +)	**Resource Name:** *prefix.ssid*.DMR.*target*.DB2TRACE.GENERIC	DMR
Issuing DB2 commands in DMR	**Resource Name:** *prefix.ssid*.DMR.*target*.DB2CMD	DMR
Displaying SQL text when the ID of the event being traced matches the user ID	Specifies which SQL text can be viewed by the user with the DUSER service and the pop-up display for the BIND-TXT entry in the DTRAC service. A message is produced in place of the SQL text to inform the user that the text display was suppressed by user authorization. Granting access to this resource allows you to display only SQL text if the authorization ID of the event being traced matches the user ID connected to MAINVIEW for DB2. **Resource Name:** *prefix.ssid*.DMR.*target*.DB2SQLAU	DMR
Displaying all SQL text	Granting access to this resource allows you to display all SQL text. **Resource Name:** *prefix.ssid*.DMR.*target*.DB2SQLAL	DMR
Issuing MVS commands	Issuing MVS commands such as VARY, START, STOP, CANCEL. **Resource Name:** *prefix.ssid*.AAO.*target*.MVSCMD	AAO
Displaying the MAINVIEW AutoOPERATOR Rules Processor application	Accessing and displaying the Rules within the Rules Processor. Users with display-only access cannot perform any actions that would affect automation. **Resource Name:** *prefix.ssid*.AAO.*target*.RULEREAD This resource is a prerequisite to implementing MAINVIEW AutoOPERATOR advanced security. For more information, refer to "Resources for MAINVIEW AutoOPERATOR: Advanced Security" on page 48.	AAO

Table 1. Resources for AAO, CMR, DBCTL, DMR, FOCAL, and MVIMS (Continued)

To protect this resource	Use this resource name	Affects products
Updating the MAINVIEW AutoOPERATOR Rules Processor application	Updating and creating new Rules in the Rules Processor application. Users with update access can take actions that effect automation, enable or disable Rule Sets, move Rules within a Rule Set, change Rule Set search strategy, and so on. **Resource Name:** *prefix.ssid*.AAO.*target*.RULEUPD This resource is a prerequisite to implementing MAINVIEW AutoOPERATOR advanced security. For more information, refer to "Resources for MAINVIEW AutoOPERATOR: Advanced Security" on page 48.	AAO
Invoking CICS transactions from a MAINVIEW AutoOPERATOR terminal session	Invoking CICS transactions from MAINVIEW AutoOPERATOR terminal sessions. **Resource Name:** *prefix.ssid*.AAO.*target*.CICSTRAN	AAO
Invoking MAINVIEW AutoOPERATOR EXECs	Invoking MAINVIEW AutoOPERATOR EXECs. **Resource Name:** *prefix.ssid*.AAO.*target*.EXEC This resource allows you to control who has authority to invoke or test EXECs. You may want to grant authority for users to have EXEC access on a test system but not on a production system. This resource is a prerequisite to implementing MAINVIEW AutoOPERATOR advanced security. For more information, refer to "Resources for MAINVIEW AutoOPERATOR: Advanced Security" on page 48.	AAO
Displaying MAINVIEW AutoOPERATOR parameter data in the Dynamic Parameter Manager	Displaying MAINVIEW AutoOPERATOR parameter data in the Dynamic Parameter Manager application without the authority to update it. **Resource Name:** *prefix.ssid*.AAO.*target*.PARMREAD This resource is a prerequisite to implementing MAINVIEW AutoOPERATOR advanced security. For more information, refer to "Resources for MAINVIEW AutoOPERATOR: Advanced Security" on page 48.	AAO
Updating MAINVIEW AutoOPERATOR parameter data in the Dynamic Parameter Manager	Updating MAINVIEW AutoOPERATOR parameter data in the Dynamic Parameter Manager application. **Resource Name:** *prefix.ssid*.AAO.*target*.PARMUPD This resource is a prerequisite to implementing MAINVIEW AutoOPERATOR advanced security. For more information, refer to "Resources for MAINVIEW AutoOPERATOR: Advanced Security" on page 48.	AAO

Table 1. Resources for AAO, CMR, DBCTL, DMR, FOCAL, and MVIMS (Continued)

To protect this resource	Use this resource name	Affects products
Invoking IMS transactions from a MAINVIEW AutoOPERATOR terminal session	**Resource Name:** *prefix.ssid*.AAO.*target*.IMSTRAN	AAO
Invoking IMS commands from a MAINVIEW AutoOPERATOR terminal session	**Resource Name:** *prefix.ssid*.AAO.*target*.IMSCMD	AAO
Sending messages to the IMS terminal	**Resource Name:** *prefix.ssid*.AAO.*target*.IMSMSG	AAO
Displaying MAINVIEW AutoOPERATOR parameter data in the TapeSHARE for AutoOPERATOR Application	**Resource Name:** *prefix.ssid*.AAO.*target*.APPL.TAPSREAD	AAO
Updating MAINVIEW AutoOPERATOR parameter data in the TapeSHARE for AutoOPERATOR application	**Resource Name:** *prefix.ssid*.AAO.*target*.APPL.TAPSUPD	AAO

Table 1. Resources for AAO, CMR, DBCTL, DMR, FOCAL, and MVIMS (Continued)

To protect this resource	Use this resource name	Affects products
Invoking AOAnywhere commands from MAINVIEW AutoOPERATOR	To invoke the following AOAnywhere commands from MAINVIEW AutoOPERATOR: AOEXEC VDEL AOEXEC VDELL AOEXEC VPUT AOEXEC VPUTL **Resource Name:** *prefix.ssid*.AAO.*target*.AOEXEC.VARUPD AOEXEC VGET AOEXEC VGETL AOEXEC VLST AOEXEC VLSTL **Resource Name:** *prefix.ssid*.AAO.*target*.AOEXEC.VARREAD AOEXEC ALERT FUNCTION(ADD) AOEXEC ALERT FUNCTION(DELETE) AOEXEC ALERT FUNCTION(CREATEQ) **Resource Name:** *prefix.ssid*.AAO.*target*.AOEXEC.ALRTUPD AOEXEC ALERT FUNCTION(READQ) AOEXEC ALERT FUNCTION(COUNT) AOEXEC ALERT FUNCTION(LISTQ) **Resource Name:** *prefix.ssid*.AAO.*target*.AOEXEC.ALRTREAD AOEXEC MSG **Resource Name:** *prefix.ssid*.AAO.*target*.AOEXEC.MSG AOEXEC NOTIFY **Resource Name:** *prefix.ssid*.AAO.*target*.AOEXEC.NOTIFY AOEXEC WTO **Resource Name:** *prefix.ssid*.AAO.*target*.AOEXEC.WTO	AAO
Invoking SYSPROG services from a MAINVIEW AutoOPERATOR terminal session	For additional information about securing SYSPROG services from MAINVIEW AutoOPERATOR, refer to "Resources for MAINVIEW AutoOPERATOR EXECs: (FEATURE=EXEC)" on page 59. **Resource Name:** *prefix.ssid*.AAO.*target*.RESAUTH	SYSPROG from AAO

Resources Common to MAINVIEW SYSPROG Services, MAINVIEW AutoOPERATOR, and MAINVIEW for OS/390

Table 2 lists all the services you can secure if you have access to MAINVIEW SYSPROG Services services from

- MAINVIEW SYSPROG Services as a stand-alone product
- MAINVIEW AutoOPERATOR for OS/390 option of MAINVIEW AutoOPERATOR, which includes some MAINVIEW SYSPROG Services
- MAINVIEW for OS/390

The third column of Table 2 shows that securing a MAINVIEW SYSPROG Services service also secures that service if you are accessing it from the MAINVIEW AutoOPERATOR for OS/390 option or from MAINVIEW for OS/390.

The MAINVIEW AutoOPERATOR for OS/390 option is distributed with a subset of MAINVIEW SYSPROG Services. **If you have the MAINVIEW AutoOPERATOR for OS/390 option and you also have MAINVIEW SYSPROG Services**, you have the option to allow access to the full MAINVIEW SYSPROG Services product from MAINVIEW AutoOPERATOR. When you choose this option, all the services listed in this table can be accessed from MAINVIEW AutoOPERATOR and any existing MAINVIEW SYSPROG Services security restrictions apply. Refer to Chapter 14, “Accessing Full RESOLVE from MAINVIEW AutoOPERATOR” in the *MAINVIEW AutoOPERATOR Customization Guide* for more information.

All of the MAINVIEW SYSPROG services are defined in the service name table, which is distributed as member ASTXA1SN in the BBSRC data set. You can use the service name table to review or override the default *function* qualifier used in the resource name for each service. See page 122 for more information on ASTXA1SN.

Notes:

- In Table 2, MAINVIEW SYSPROG Services has been abbreviated to SYSPROG and MAINVIEW for OS/390 has been abbreviated to MVMVS.
- For an explanation of the resource naming convention used in Table 2, see page 15.
- You may code a user exit to modify the function qualifier for any service, as described on page 122. A default exit is provided for those services marked with an asterisk (*) in Table 2.

Table 2. Resources for MAINVIEW SYSPROG Services

Service	Resource name	Affects products
ALLOCATE	*prefix.sysid*.RESOLVE.ALLOCATE.UPDATE	SYSPROG SYSPROG from MVMVS
APF*	*prefix.sysid*.RESOLVE.APF.LIST *prefix.sysid*.RESOLVE.APF.UPDATE	SYSPROG SYSPROG from MVMVS
ASM	*prefix.sysid*.RESOLVE.ASM.LIST	SYSPROG SYSPROG from AAO SYSPROG from MVMVS
ASVT	*prefix.sysid*.RESOLVE.ASVT.LIST	SYSPROG
AUTHTSO	*prefix.sysid*.RESOLVE.AUTHTSO.LIST *prefix.sysid*.RESOLVE.AUTHTSO.UPDATE	SYSPROG SYSPROG from MVMVS
BBXS	*prefix.sysid*.RESOLVE.BBXS.LIST	SYSPROG SYSPROG from MVMVS
CDE	*prefix.sysid*.RESOLVE.CDE.LIST	SYSPROG SYSPROG from MVMVS
CHAP	*prefix.sysid*.RESOLVE.CHAP.UPDATE	SYSPROG SYSPROG from MVMVS
CLEAR (Alias: CLR)	*prefix.sysid*.RESOLVE.CLEAR.UPDATE	SYSPROG SYSPROG from MVMVS
CNSL	*prefix.sysid*.RESOLVE.CNSL.UPDATE	SYSPROG
CONSOLES	*prefix.sysid*.RESOLVE.CONSOLES.LIST	SYSPROG SYSPROG from MVMVS
CPU	*prefix.sysid*.RESOLVE.CPU.LIST	SYSPROG SYSPROG from AAO SYSPROG from MVMVS
CSA	*prefix.sysid*.RESOLVE.CSA.LIST	SYSPROG SYSPROG from AAO SYSPROG from MVMVS

* An exit can be used to modify the *function* qualifier (see page15) in the resource name for any service, as described on page 122. A default exit is provided for services marked with an asterisk in this table.

Table 2. Resources for MAINVIEW SYSPROG Services (Continued)

Service	Resource name	Affects products
CSMON*	*prefix.sysid*.RESOLVE.CSMON.LIST *prefix.sysid*.RESOLVE.CSMON.UPDATE	SYSPROG SYSPROG from MVMVS
CSSUM	*prefix.sysid*.RESOLVE.CSSUM.LIST	SYSPROG SYSPROG from MVMVS
DCPU	*prefix.sysid*.RESOLVE.DCPU.LIST	SYSPROG SYSPROG from MVMVS
DEALLOC	*prefix.sysid*.RESOLVE.DEALLOC.UPDATE	SYSPROG SYSPROG from MVMVS
DEBUG	*prefix.sysid*.RESOLVE.DEBUG.UPDATE	SYSPROG
DEVIATN	*prefix.sysid*.RESOLVE.DEVIATN.LIST	SYSPROG SYSPROG from MVMVS
DOMAIN	*prefix.sysid*.RESOLVE.DOMAIN.LIST	SYSPROG SYSPROG from MVMVS
DONTSWAP	*prefix.sysid*.RESOLVE.DONTSWAP.UPDATE	SYSPROG SYSPROG from MVMVS
DSNAME	*prefix.sysid*.RESOLVE.DSNAME.LIST	SYSPROG SYSPROG from MVMVS
DUMP (Alias: LIST)	*prefix.sysid*.RESOLVE.DUMP.LIST	SYSPROG from MVMVS
DVIEW	*prefix.sysid*.RESOLVE.DVIEW.LIST	SYSPROG SYSPROG from MVMVS
DVIEW	*prefix.sysid*.RESOLVE.DVIEW.UPDATE	SYSPROG SYSPROG from MVMVS
EDTINFO	*prefix.sysid*.RESOLVE.EDTINFO.LIST	SYSPROG SYSPROG from MVMVS
ENQUEUES	*prefix.sysid*.RESOLVE.ENQUEUES.LIST	SYSPROG SYSPROG from AAO SYSPROG from MVMVS

* An exit can be used to modify the *function* qualifier (see page15) in the resource name for any service, as described on page 122. A default exit is provided for services marked with an asterisk in this table.

Table 2. Resources for MAINVIEW SYSPROG Services (Continued)

Service	Resource name	Affects products
EQUATE	*prefix.sysid*.RESOLVE.EQUATE.LIST	SYSPROG SYSPROG from MVMVS
ESCLASS	*prefix.sysid*.RESOLVE.ESCLASS.LIST *prefix.sysid*.RESOLVE.ESCLASS.UPDATE	SYSPROG SYSPROG from MVMVS
ESTORAGE	*prefix.sysid*.RESOLVE.ESTORAGE.LIST	SYSPROG SYSPROG from AAO
EXECUTE	*prefix.sysid*.RESOLVE.EXECUTE.UPDATE	SYSPROG SYSPROG from MVMVS
EXIT	*prefix.sysid*.RESOLVE.EXIT.UPDATE	SYSPROG SYSPROG from MVMVS
FCOMMON	*prefix.sysid*.RESOLVE.FCOMMON.UPDATE	SYSPROG
FINDMBR	*prefix.sysid*.RESOLVE.FINDMBR.LIST	SYSPROG SYSPROG from MVMVS
HELP	*prefix.sysid*.RESOLVE.HELP.LIST	SYSPROG
INFO	*prefix.sysid*.RESOLVE.INFO.LIST	SYSPROG SYSPROG from AAO SYSPROG from MVMVS
IO	*prefix.sysid*.RESOLVE.IO.LIST	SYSPROG SYSPROG from AAO SYSPROG from MVMVS
IPLDATA	*prefix.sysid*.RESOLVE.IPLDATA.LIST	SYSPROG
LABEL	*prefix.sysid*.RESOLVE.LABEL.LIST	SYSPROG SYSPROG from MVMVS
LCPU*	*prefix.sysid*.RESOLVE.LCPU.LIST *prefix.sysid*.RESOLVE.LCPU.UPDATE	SYSPROG SYSPROG from MVMVS
LLIST*	*prefix.sysid*.RESOLVE.LLIST.LIST *prefix.sysid*.RESOLVE.LLIST.UPDATE	SYSPROG SYSPROG from MVMVS

* An exit can be used to modify the *function* qualifier (see page15) in the resource name for any service, as described on page 122. A default exit is provided for services marked with an asterisk in this table.

Table 2. Resources for MAINVIEW SYSPROG Services (Continued)

Service	Resource name	Affects products
LNKLST*	*prefix.sysid*.RESOLVE.LNKLST.LIST *prefix.sysid*.RESOLVE.LNKLST.UPDATE	SYSPROG SYSPROG from MVMVS
LOADLPA*	*prefix.sysid*.RESOLVE.LOADLPA.LIST *prefix.sysid*.RESOLVE.LOADLPA.UPDATE	SYSPROG SYSPROG from MVMVS
LOCKS	*prefix.sysid*.RESOLVE.LOCKS.LIST	SYSPROG SYSPROG from MVMVS
LOGGING	*prefix.sysid*.RESOLVE.LOGGING.LIST	SYSPROG
LPA	*prefix.sysid*.RESOLVE.LPA.LIST	SYSPROG SYSPROG from MVMVS
LWAIT*	*prefix.sysid*.RESOLVE.LWAIT.LIST *prefix.sysid*.RESOLVE.LWAIT.UPDATE	SYSPROG SYSPROG from MVMVS
MCOMMAND (Aliases: COMMAND, CMD and MCMD)	*prefix.sysid*.RESOLVE.MCOMMAND.UPDATE	SYSPROG SYSPROG from MVMVS
MDEVICE	*prefix.sysid*.RESOLVE.MDEVICE.LIST	SYSPROG SYSPROG from AAO SYSPROG from MVMVS
MEMSCAN	*prefix.sysid*.RESOLVE.MEMSCAN.LIST	SYSPROG SYSPROG from MVMVS
MIO	*prefix.sysid*.RESOLVE.MIO.LIST	SYSPROG SYSPROG from MVMVS
MLCU	*prefix.sysid*.RESOLVE.MLCU.LIST	SYSPROG SYSPROG from MVMVS
MONITOR	*prefix.sysid*.RESOLVE.MONITOR.LIST	SYSPROG SYSPROG from AAO SYSPROG from MVMVS

* An exit can be used to modify the *function* qualifier (see page15) in the resource name for any service, as described on page 122. A default exit is provided for services marked with an asterisk in this table.

Table 2. Resources for MAINVIEW SYSPROG Services (Continued)

Service	Resource name	Affects products
MOUNT	*prefix.sysid*.RESOLVE.MOUNT.UPDATE	SYSPROG SYSPROG from MVMVS
MPATH (Alias: MCHANNEL)	*prefix.sysid*.RESOLVE.MPATH.LIST	SYSPROG SYSPROG from AAO SYSPROG from MVMVS
MSTORAGE	*prefix.sysid*.RESOLVE.MSTORAGE.LIST	SYSPROG SYSPROG from MVMVS
MTP	*prefix.sysid*.RESOLVE.MTP.LIST	SYSPROG SYSPROG from AAO SYSPROG from MVMVS
NUCLEUS	*prefix.sysid*.RESOLVE.NUCLEUS.LIST	SYSPROG SYSPROG from MVMVS
OKSWAP	*prefix.sysid*.RESOLVE.OKSWAP.UPDATE	SYSPROG SYSPROG from MVMVS
PAGING	*prefix.sysid*.RESOLVE.PAGING.LIST	SYSPROG SYSPROG from AAO SYSPROG from MVMVS
PARMLIST (Alias: PLIST)	*prefix.sysid*.RESOLVE.PARMLIST.LIST	SYSPROG SYSPROG from MVMVS
PCPU	*prefix.sysid*.RESOLVE.PCPU.LIST	SYSPROG SYSPROG from MVMVS
PFKEY	*prefix.sysid*.RESOLVE.PFKEY.LIST	SYSPROG
PIO	*prefix.sysid*.RESOLVE.PIO.LIST	SYSPROG SYSPROG from MVMVS
PPT*	*prefix.sysid*.RESOLVE.PPT.LIST *prefix.sysid*.RESOLVE.PPT.UPDATE	SYSPROG SYSPROG from MVMVS
PRIVATE (Alias: PVT)	*prefix.sysid*.RESOLVE.PRIVATE.LIST	SYSPROG SYSPROG from MVMVS

* An exit can be used to modify the *function* qualifier (see page15) in the resource name for any service, as described on page 122. A default exit is provided for services marked with an asterisk in this table.

Table 2. Resources for MAINVIEW SYSPROG Services (Continued)

Service	Resource name	Affects products
PROGRESS	*prefix.sysid*.RESOLVE.PROGRESS.LIST	SYSPROG SYSPROG from AAO SYSPROG from MVMVS
PRSM	*prefix.sysid*.RESOLVE.PRSM.LIST	SYSPROG SYSPROG from MVMVS
REALLOC (Alias: RA)	*prefix.sysid*.RESOLVE.REALLOC.UPDATE	SYSPROG
REPLIES	*prefix.sysid*.RESOLVE.REPLIES.LIST	SYSPROG SYSPROG from AAO SYSPROG from MVMVS
RESERVES	*prefix.sysid*.RESOLVE.RESERVES.LIST	SYSPROG SYSPROG from AAO SYSPROG from MVMVS
RSM	*prefix.sysid*.RESOLVE.RSM.LIST	SYSPROG SYSPROG from AAO SYSPROG from MVMVS
SDUMP	*prefix.sysid*.RESOLVE.SDUMP.UPDATE	SYSPROG SYSPROG from MVMVS
SETOP	*prefix.sysid*.RESOLVE.SETOP.LIST	SYSPROG SYSPROG from MVMVS
SMFEXIT*	*prefix.sysid*.RESOLVE.SMFEXIT.LIST *prefix.sysid*.RESOLVE.SMFEXIT.UPDATE	SYSPROG SYSPROG from MVMVS
SMSLIST	*prefix.sysid*.RESOLVE.SMSLIST.LIST	SYSPROG SYSPROG from MVMVS
SOFTFRR	*prefix.sysid*.RESOLVE.SOFTFRR.LIST	SYSPROG SYSPROG from AAO SYSPROG from MVMVS
SPACE	*prefix.sysid*.RESOLVE.SPACE.LIST	SYSPROG SYSPROG from AAO SYSPROG from MVMVS

* An exit can be used to modify the *function* qualifier (see page15) in the resource name for any service, as described on page 122. A default exit is provided for services marked with an asterisk in this table.

Table 2. Resources for MAINVIEW SYSPROG Services (Continued)

Service	Resource name	Affects products
SRM	*prefix.sysid*.RESOLVE.SRM.LIST	SYSPROG SYSPROG from MVMVS SYSPROG from AAO
SSVT* (Alias: SSCT)	*prefix.sysid*.RESOLVE.SSVT.LIST *prefix.sysid*.RESOLVE.SSVT.UPDATE	SYSPROG SYSPROG from MVMVS
STATUS	*prefix.sysid*.RESOLVE.STATUS.LIST	SYSPROG SYSPROG from AAO SYSPROG from MVMVS
SUBMIT	*prefix.sysid*.RESOLVE.SUBMIT.UPDATE	SYSPROG
SVCFIND	*prefix.sysid*.RESOLVE.SVCFIND.LIST	SYSPROG SYSPROG from MVMVS
SYSDUMP	*prefix.sysid*.RESOLVE.SYSDUMP.LIST	SYSPROG SYSPROG from AAO SYSPROG from MVMVS
TCB	*prefix.sysid*.RESOLVE.TCB.LIST	SYSPROG SYSPROG from MVMVS
TERM	*prefix.sysid*.RESOLVE.TERM.LIST	SYSPROG SYSPROG from MVMVS
TIME	*prefix.sysid*.RESOLVE.TIME.LIST	SYSPROG SYSPROG from MVMVS
TIOT	*prefix.sysid*.RESOLVE.TIOT.LIST	SYSPROG SYSPROG from AAO SYSPROG from MVMVS
TPIO	*prefix.sysid*.RESOLVE.TPIO.LIST	SYSPROG SYSPROG from AAO SYSPROG from MVMVS
TQE	*prefix.sysid*.RESOLVE.TQE.LIST	SYSPROG SYSPROG from MVMVS
TRACK	*prefix.sysid*.RESOLVE.TRACK.LIST	SYSPROG

* An exit can be used to modify the *function* qualifier (see page15) in the resource name for any service, as described on page 122. A default exit is provided for services marked with an asterisk in this table.

Table 2. Resources for MAINVIEW SYSPROG Services (Continued)

Service	Resource name	Affects products
TRTBL	*prefix.sysid*.RESOLVE.TRTBL.LIST	SYSPROG SYSPROG from MVMVS
TSULIST	*prefix.sysid*.RESOLVE.TSULIST.LIST	SYSPROG SYSPROG from AAO SYSPROG from MVMVS
UCB	*prefix.sysid*.RESOLVE.UCB.LIST	SYSPROG SYSPROG from MVMVS
UNLOAD	*prefix.sysid*.RESOLVE.UNLOAD.UPDATE	SYSPROG SYSPROG from MVMVS
USING	*prefix.sysid*.RESOLVE.USING.LIST	SYSPROG SYSPROG from AAO SYSPROG from MVMVS
VIO	*prefix.sysid*.RESOLVE.VIO.LIST	SYSPROG SYSPROG from MVMVS
VMCMD	*prefix.sysid*.RESOLVE.VMCMD.UPDATE	SYSPROG SYSPROG from AAO SYSPROG from MVMVS
WAITING	*prefix.sysid*.RESOLVE.WAITING.LIST	SYSPROG SYSPROG from MVMVS
WARNING (Alias: AEW and PW)	*prefix.sysid*.RESOLVE.WARNING.LIST	SYSPROG SYSPROG from MVMVS
XCALL	Secures who can issue the MAINVIEW SYSPROG Services XCALL service. **Note:** Use only if requested by BMC Software Customer Support personnel. **Resource Name:** *prefix.sysid*.RESOLVE.XCALL.UPDATE	SYSPROG

* An exit can be used to modify the *function* qualifier (see page15) in the resource name for any service, as described on page 122. A default exit is provided for services marked with an asterisk in this table.

Table 2. Resources for MAINVIEW SYSPROG Services (Continued)

Service	Resource name	Affects products
XLOAD	Secures who can issue the MAINVIEW SYSPROG Services XLOAD service. **Note:** Use only if requested by BMC Software Customer Support personnel. *prefix.sysid*.RESOLVE.XLOAD.LIST	SYSPROG
XSERVICE	Secures who can issue the MAINVIEW SYSPROG Services XSERVICE service. **Note:** Use only if requested by BMC Software Customer Support personnel. *prefix.sysid*.RESOLVE.XSERVICE.LIST	SYSPROG
ZAP	*prefix.sysid*.RESOLVE.ZAP.UPDATE	SYSPROG SYSPROG from MVMVS
The following lists COMMON STORAGE MONITOR services you can access from MAINVIEW for OS/390.		
OVERVIEW	*prefix.sysid*.CSMON.OVERVIEW.LIST	COMMON STORAGE MONITOR SYSPROG from MVMVS
SUMMARY	*prefix.sysid*.CSMON.SUMMARY.LIST	COMMON STORAGE MONITOR SYSPROG from MVMVS
STATUS	*prefix.sysid*.CSMON.STATUS.LIST	COMMON STORAGE MONITOR SYSPROG from MVMVS
DISPLAY	*prefix.sysid*.CSMON.DISPLAY.LIST	COMMON STORAGE MONITOR SYSPROG from MVMVS
DISPLAY	*prefix.sysid*.CSMON.BROWSE.LIST	COMMON STORAGE MONITOR SYSPROG from MVMVS
* An exit can be used to modify the *function* qualifier (see page15) in the resource name for any service, as described on page 122. A default exit is provided for services marked with an asterisk in this table.		

Table 2. Resources for MAINVIEW SYSPROG Services (Continued)

Service	Resource name	Affects products
ALTER	*prefix.sysid*.CSMON.ALTER.UPDATE	COMMON STORAGE MONITOR SYSPROG from MVMVS
FREE	*prefix.sysid*.CSMON.FREE.UPDATE	COMMON STORAGE MONITOR SYSPROG from MVMVS
* An exit can be used to modify the *function* qualifier (see page15) in the resource name for any service, as described on page 122. A default exit is provided for services marked with an asterisk in this table.		

Resources Common to MAINVIEW for CICS and the MAINVIEW AutoOPERATOR for CICS Option

Table 3 lists the resources that, once secured, affect both MAINVIEW for CICS and the MAINVIEW AutoOPERATOR for CICS option. Refer to "Resources for MAINVIEW for CICS" on page 61 for more resources that affect the MAINVIEW for CICS product.

Note: In this table, the MAINVIEW AutoOPERATOR for CICS option has been abbreviated to AO for CICS. See page 13 for an explanation of the resource naming convention.

Table 3. CICS Action Services

Action	Description	Affects products
AID		
PURGE AID	Secures access to the PURGE AID action of the CAIDS views and the AID display. It also secures the CICS PURGE AID command in the MAINVIEW AutoOPERATOR IMFEXEC API and Rule Processor. **Resource Name:** *prefix.ssid*.CICS.target.ALTAID.PURGEAID	MAINVIEW for CICS AO for CICS
CLASSES		
ALTER MAXT	Secures access to the ALTER MAXT action on the CLASSES display. It also secures the CICS ALTER MAXT command in the MAINVIEW AutoOPERATOR IMFEXEC API and Rule Processor. **Resource Name:** *prefix.ssid*.CICS.target.ALTCLAS.ALTMAXT	MAINVIEW for CICS AO for CICS
ALTER AMXT	Secures access to the ALTER AMXT action on the CLASSES display. It also secures the CICS ALTER AMXT command in the MAINVIEW AutoOPERATOR IMFEXEC API and Rule Processor. **Resource Name:** *prefix.ssid*.CICS.target.ALTCLAS.ALTAMXT	MAINVIEW for CICS AO for CICS
ALTER CLASS 1	Secures access to the ALTER CLASS 1 action on the CLASSES display. It also secures the CICS ALTER CLASS 1 command in the MAINVIEW AutoOPERATOR IMFEXEC API and Rule Processor. **Resource Name:** *prefix.ssid*.CICS.target.ALTCLAS.ALTCM001	MAINVIEW for CICS AO for CICS
ALTER CLASS 2	Secures access to the ALTER CLASS 2 action on the CLASSES display. It also secures the CICS ALTER CLASS 2 command in the MAINVIEW AutoOPERATOR IMFEXEC API and Rule Processor. **Resource Name:** *prefix.ssid*.CICS.target.ALTCLAS.ALTCM002	MAINVIEW for CICS AO for CICS
ALTER CLASS 3	Secures access to the ALTER CLASS 3 action on the CLASSES display. It also secures the CICS ALTER CLASS 3 command in the MAINVIEW AutoOPERATOR IMFEXEC API and Rule Processor. **Resource Name:** *prefix.ssid*.CICS.target.ALTCLAS.ALTCM003	MAINVIEW for CICS AO for CICS

Table 3. CICS Action Services (Continued)

Action	Description	Affects products
ALTER CLASS 4	Secures access to the ALTER CLASS 4 action on the CLASSES display. It also secures the CICS ALTER CLASS 4 command in the MAINVIEW AutoOPERATOR IMFEXEC API and Rule Processor. **Resource Name:** *prefix.ssid.*CICS.target.ALTCLAS.ALTCM004	MAINVIEW for CICS AO for CICS
ALTER CLASS 5	Secures access to the ALTER CLASS 5 action on the CLASSES display. It also secures the CICS ALTER CLASS 5 command in the MAINVIEW AutoOPERATOR IMFEXEC API and Rule Processor. **Resource Name:** *prefix.ssid.*CICS.target.ALTCLAS.ALTCM005	MAINVIEW for CICS AO for CICS
ALTER CLASS 6	Secures access to the ALTER CLASS 6 action on the CLASSES display. It also secures the CICS ALTER CLASS 6 command in the MAINVIEW AutoOPERATOR IMFEXEC API and Rule Processor. **Resource Name:** *prefix.ssid.*CICS.target.ALTCLAS.ALTCM006	MAINVIEW for CICS AO for CICS
ALTER CLASS 7	Secures access to the ALTER CLASS 7 action on the CLASSES display. It also secures the CICS ALTER CLASS 7 command in the MAINVIEW AutoOPERATOR IMFEXEC API and Rule Processor. **Resource Name:** *prefix.ssid.*CICS.target.ALTCLAS.ALTCM007	MAINVIEW for CICS AO for CICS
ALTER CLASS 8	Secures access to the ALTER CLASS 8 action on the CLASSES display. It also secures the CICS ALTER CLASS 8 command in the MAINVIEW AutoOPERATOR IMFEXEC API and Rule Processor. **Resource Name:** *prefix.ssid.*CICS.target.ALTCLAS.ALTCM008	MAINVIEW for CICS AO for CICS
ALTER CLASS 9	Secures access to the ALTER CLASS 9 action on the CLASSES display. It also secures the CICS ALTER CLASS 9 command in the MAINVIEW AutoOPERATOR IMFEXEC API and Rule Processor. **Resource Name:** *prefix.ssid.*CICS.target.ALTCLAS.ALTCM009	MAINVIEW for CICS AO for CICS
ALTER CLASS 10	Secures access to the ALTER CLASS 10 action on the CLASSES display. It also secures the CICS ALTER CLASS 10 command in the MAINVIEW AutoOPERATOR IMFEXEC API and Rule Processor. **Resource Name:** *prefix.ssid.*CICS.target.ALTCLAS.ALTCM010	MAINVIEW for CICS AO for CICS
ALTER ICV	Secures access to the ALTER ICV action on the CLASSES display. It also secures the CICS ALTER ICV command in the MAINVIEW AutoOPERATOR IMFEXEC API and Rule Processor. **Resource Name:** *prefix.ssid.*CICS.target.ALTCLAS.ALTICV	MAINVIEW for CICS AO for CICS

Table 3. CICS Action Services (Continued)

Action	Description	Affects products
CONNECTION		
ACQUIRE	Secures access to the ACQUIRE connection action of the CCONN views and the CONNECT display. It also secures the CICS CONN ACQUIRE command in the MAINVIEW AutoOPERATOR IMFEXEC API and Rule Processor. **Resource Name:** *prefix.ssid.*CICS.target.ALTCONN.ACQCONN	MAINVIEW for CICS AO for CICS
RELEASE	Secures access to the RELEASE connection action of the CCONN views and the CONNECT display. It also secures the CICS CONN RELEASE command in the MAINVIEW AutoOPERATOR IMFEXEC API and Rule Processor. **Resource Name:** *prefix.ssid.*CICS.target.ALTCONN.RELCONN	MAINVIEW for CICS AO for CICS
INSERVE	Secures access to the INSERVE connection action of the CCONN views and the CONNECT display. It also secures the CICS CONN INSERVICE command in the MAINVIEW AutoOPERATOR IMFEXEC API and Rule Processor. **Resource Name:** *prefix.ssid.*CICS.target.ALTCONN.INSCONN	MAINVIEW for CICS AO for CICS
OUTSERVE	Secures access to the OUTSERVE connection action of the CCONN views and the CONNECT display. It also secures the CICS CONN OUTSERVICE command in the MAINVIEW AutoOPERATOR IMFEXEC API and Rule Processor. **Resource Name:** *prefix.ssid.*CICS.target.ALTCONN.OUTCONN	MAINVIEW for CICS AO for CICS
NOTCONN	Secures access to the NOTCONN connection action of the CCONN views and the CONNECT display. It also secures the CICS CONN NOTPEND command in the MAINVIEW AutoOPERATOR IMFEXEC API and Rule Processor. **Resource Name:** *prefix.ssid.*CICS.target.ALTCONN.NOTCONN	MAINVIEW for CICS AO for CICS
PURGE	Secures access to the PURGE connection action of the CCONN views and the CONNECT display. It also secures the CICS CONN PURGE command in the MAINVIEW AutoOPERATOR IMFEXEC API and Rule Processor. **Resource Name:** *prefix.ssid.*CICS.target.ALTCONN.PURCONN	MAINVIEW for CICS AO for CICS
CONTROLLER		
INSERVE	Secures access to the INSERVE BTAM controller action of the CTERM views and the TERMINAL display. **Resource Name:** *prefix.ssid.*CICS.target.ALTTERM.INSCONT	MAINVIEW for CICS

Table 3. CICS Action Services (Continued)

Action	Description	Affects products
OUTSERVE	Secures access to the OUTSERVE BTAM controller action of the CTERM views and the TERMINAL display. **Resource Name:** *prefix.ssid*.CICS.target.ALTTERM.OUTCONT	MAINVIEW for CICS
DESTINATION		
DISABLE	Secures access to the DISABLE action on the DEST display. It also secures the IMFEXEC CICS DISABLE DEST command. **Resource Name:** *prefix.ssid*.CICS.target.ALTDEST.DISDEST	MAINVIEW for CICS AO for CICS
ENABLE	Secures access to the ENABLE action on the DEST display. It also secures the IMFEXEC CICS ENABLE DEST command. **Resource Name:** *prefix.ssid*.CICS.target.ALTDEST.ENADEST	MAINVIEW for CICS AO for CICS
PURGE TD	Secures access to the PURGE TD action on the DEST display. It also secures the IMFEXEC CICS PURGE DEST command. **Resource Name:** *prefix.ssid*.CICS.target.ALTDEST.PURGETD	MAINVIEW for CICS AO for CICS
DL/1 DATABASE		
START	Secures access to the START action in the DDIR services. It also secures the CICS STARTDB command in the MAINVIEW AutoOPERATOR IMFEXEC API and Rule Processor. **Resource Name:** *prefix.ssid*.CICS.target.ALTFILE.STADLID	MAINVIEW for CICS AO for CICS
STOP	Secures access to the STOP action in the DDIR services. It also secures the CICS STOPDB command in the MAINVIEW AutoOPERATOR IMFEXEC API and Rule Processor. **Resource Name:** *prefix.ssid*.CICS.target.ALTFILE.STODLID	MAINVIEW for CICS AO for CICS
DUMP	Secures access to the DUMP DL/1 database service. **Resource Name:** *prefix.ssid*.CICS.target.ALTFILE.DUMDLID	MAINVIEW for CICS
RECOVER	Secures access to the RECOVER action in the DDIR services. It also secures the CICS RECOVERDB command in the MAINVIEW AutoOPERATOR IMFEXEC API and Rule Processor. **Resource Name:** *prefix.ssid*.CICS.target.ALTDEST.RECDLID	MAINVIEW for CICS AO for CICS

Table 3. CICS Action Services (Continued)

Action	Description	Affects products
DUMP DATA SET		
SET DUMPDS DATASET	Secures access to the SET command on the CREGSYS view when the Dump Data Set field is modified (the data set is switched). It also secures the CICS ALTER DUMPDS DATASET command in the MAINVIEW AutoOPERATOR IMFEXEC API and Rule Processor. **Resource Name:** *prefix.ssid.*CICS.target.SETDMPD.DATASET	MAINVIEW for CICS AO for CICS
SET DUMPDS SWITCH OPTION	Secures access to the SET command on the CREGSYS view when the Dump Data Set Switch Option field is modified. It also secures the CICS ALTER DUMPDS SWITCHSTATUS command in the MAINVIEW AutoOPERATOR IMFEXEC API and Rule Processor. **Resource Name:** *prefix.ssid.*CICS.target.SETDMPD.SWITCH	MAINVIEW for CICS AO for CICS
SET DUMPDS OPEN/CLOSE STATUS	Secures access to the SET command on the CREGSYS view when the Dump Data Set Status field is modified (the data set is opened or closed). It also secures the CICS ALTER DUMPDS OPENSTATUS command in the MAINVIEW AutoOPERATOR IMFEXEC API and Rule Processor. **Resource Name:** *prefix.ssid.*CICS.target.SETDMPD.STATUS	MAINVIEW for CICS AO for CICS
SET DUMPDS INITIAL DATASET	Secures access to the SET command on the CREGSYS view when the Initial Dump Data Set field is modified. It also secures the CICS ALTER DUMPDS INITIALDDS command in the MAINVIEW AutoOPERATOR IMFEXEC API and Rule Processor. **Resource Name:** *prefix.ssid.*CICS.target.SETDMPD.INIT	MAINVIEW for CICS AO for CICS
DUMP CODE		
RESET DUMPCODE	Secures access to the RES command on the CDUMPCD view. It also secures the CICS ALTER DUMPCODE RESET command in the MAINVIEW AutoOPERATOR IMFEXEC API and Rule Processor. **Resource Name:** *prefix.ssid.*CICS.target.SETDMPCD.RESET	MAINVIEW for CICS AO for CICS
SET DUMPCODE DAE OPTION	Secures access to the SET command on the CDUMPCD view when the DAE Option field is modified. It also secures the CICS ALTER DUMPCODE DAE command in the MAINVIEW AutoOPERATOR IMFEXEC API and Rule Processor. **Resource Name:** *prefix.ssid.*CICS.target.SETDMPCD.DAEOPT	MAINVIEW for CICS AO for CICS
SET DUMPCODE MAXIMUM DUMPS	Secures access to the SET command on the CDUMPCD view when the Maximum Dumps field is modified. It also secures the CICS ALTER DUMPCODE MAXIMUM command in the MAINVIEW AutoOPERATOR IMFEXEC API and Rule Processor. **Resource Name:** *prefix.ssid.*CICS.target.SETDMPCD.MAXDUMP	MAINVIEW for CICS AO for CICS

Table 3. CICS Action Services (Continued)

Action	Description	Affects products
SET DUMPCODE SCOPE	Secures access to the SET command on the CDUMPCD view when the Dump Scope field is modified. It also secures the CICS ALTER DUMPCODE SCOPE command in the MAINVIEW AutoOPERATOR IMFEXEC API and Rule Processor. **Resource Name:** *prefix.ssid*.CICS.target.SETDMPCD.DMPSCPE	MAINVIEW for CICS AO for CICS
SET DUMPCODE SHUTDOWN OPTION	Secures access to the SET command on the CDUMPCD view when the Shutdown Option field is modified. It also secures the CICS ALTER DUMPCODE SHUTDOWN command in the MAINVIEW AutoOPERATOR IMFEXEC API and Rule Processor. **Resource Name:** *prefix.ssid*.CICS.target.SETDMPCD.SHDNOPT	MAINVIEW for CICS AO for CICS
SET DUMPCODE SYSDUMP OPTION	Secures access to the SET command on the CDUMPCD view when the SDUMP Option field is modified. It also secures the CICS ALTER DUMPCODE SYSDUMP command in the MAINVIEW AutoOPERATOR IMFEXEC API and Rule Processor. **Resource Name:** *prefix.ssid*.CICS.target.SETDMPCD.SDMPOPT	MAINVIEW for CICS AO for CICS
SET DUMPCODE TRANSACTION DUMP OPTION	Secures access to the SET command on the CDUMPCD view when the Transaction Dump Option field is modified. It also secures the CICS ALTER DUMPCODE TRANDUMP command in the MAINVIEW AutoOPERATOR IMFEXEC API and Rule Processor. **Resource Name:** *prefix.ssid*.CICS.target.SETDMPCD.TDMPOPT	MAINVIEW for CICS AO for CICS
FILE		
DISABLE	Secures access to the DISABLE file action of the CFILE views and the FILE, DSNAMES, and DATATABL displays. It also secures the CICS DISABLE FILE command in the MAINVIEW AutoOPERATOR IMFEXEC API and Rule Processor. **Resource Name:** *prefix.ssid*.CICS.target.ALTFILE.DISFILE	MAINVIEW for CICS AO for CICS
ENABLE	Secures access to the ENABLE file action of the CFILE views and the FILE, DSNAMES, and DATATABL displays. It also secures the CICS ENABLE FILE command in the MAINVIEW AutoOPERATOR IMFEXEC API and Rule Processor. **Resource Name:** *prefix.ssid*.CICS.target.ALTFILE.ENAFILE	MAINVIEW for CICS AO for CICS
OPEN	Secures access to the OPEN file action of the CFILE views and the FILE, DSNAMES, and DATATABL displays. It also secures the CICS OPEN FILE command in the MAINVIEW AutoOPERATOR IMFEXEC API and Rule Processor. **Resource Name:** *prefix.ssid*.CICS.target.ALTFILE.OPEN	MAINVIEW for CICS AO for CICS

Table 3. CICS Action Services (Continued)

Action	Description	Affects products
CLOSE	Secures access to the CLOSE file action of the CFILE views and the FILE, DSNAMES, and DATATABL displays. It also secures the CICS CLOSE FILE command in the MAINVIEW AutoOPERATOR IMFEXEC API and Rule Processor. **Resource Name:** *prefix.ssid*.CICS.target.ALTFILE.CLOSE	MAINVIEW for CICS AO for CICS
ALLOCATE	Secures access to the CICS ALLOCATE FILE command in the MAINVIEW AutoOPERATOR IMFEXEC API and Rule Processor. **Resource Name:** *prefix.ssid*.CICS.target.ALTFILE.ALLOC	AO for CICS
FREE	Secures access to the FREE file action of the CFILE views and the FILE, DSNAMES, and DATATABL displays. It also secures the CICS FREE FILE command in the MAINVIEW AutoOPERATOR IMFEXEC API and Rule Processor. **Resource Name:** *prefix.ssid*.CICS.target.ALTFILE.FREE	MAINVIEW for CICS AO for CICS
ICE		
PURGE ICE	Secures access to the PURGE ICE action of the CICES views and the ICE display. It also secures the CICS PURGE ICE command in the MAINVIEW AutoOPERATOR IMFEXEC API and Rule Processor. **Resource Name:** *prefix.ssid*.CICS.target.ALTICES.PURGEICE	MAINVIEW for CICS AO for CICS
JVM Pool		
SET JVMPL STATUS	Secures access to the ENA or DIS commands on the CJVMPL view or the SET command on the CJVMPL view when the Status field is modified. **Resource Name:** *prefix.ssid*.CICS.target.SETJVMP.STATUS	MAINVIEW for CICS
SET JVMPL TERMINATE	Secures access to the TRM, PUR and FOR commands on the CJVMPL view. **Resource Name:** *prefix.ssid*.CICS.target.SETJVMP.TERMINAT	MAINVIEW for CICS
LINE		
INSERVE	Secures access to the INSERVE BTAM line action of the CTERM views and the TERMINAL display. **Resource Name:** *prefix.ssid*.CICS.target.ALTTERM.INSLINE	MAINVIEW for CICS
OUTSERVE	Secures access to the OUTSERVE BTAM line action of the CTERM views and the TERMINAL display. **Resource Name:** *prefix.ssid*.CICS.target.ALTTERM.OUTLINE	MAINVIEW for CICS

Table 3. CICS Action Services (Continued)

Action	Description	Affects products
MODES		
MAX SESSIONS	Secures access to the MAX SESSIONS action of the CONNXPN2 display. **Resource Name:** *prefix.ssid*.CICS.target.ALTCONN.AVAMODE	MAINVIEW for CICS
PROGRAM		
CICSKEY	Secures access to the CICSKEY action of the CPROG views and the PROGRAM display. **Resource Name:** *prefix.ssid*.CICS.target.ALTPROG.CICPROG	MAINVIEW for CICS
DISABLE	Secures access to the DISABLE action of the CPROG views and the PROGRAM display. It also secures the CICS DISABLE PROGRAM command in the MAINVIEW AutoOPERATOR IMFEXEC API and Rule Processor. **Resource Name:** *prefix.ssid*.CICS.target.ALTPROG.DISPROG	MAINVIEW for CICS AO for CICS
DROP	Secures access to the DROP action of the CPROG views and the PROGRAM display. It also secures the CICS DROP command in the MAINVIEW AutoOPERATOR IMFEXEC API and Rule Processor. **Resource Name:** *prefix.ssid*.CICS.target.ALTPROG.PGMDROP	MAINVIEW for CICS AO for CICS
ENABLE	Secures access to the ENABLE action of the CPROG views and the PROGRAM display. It also secures the CICS ENABLE PROGRAM command in the MAINVIEW AutoOPERATOR IMFEXEC API and Rule Processor. **Resource Name:** *prefix.ssid*.CICS.target.ALTPROG.ENAPROG	MAINVIEW for CICS AO for CICS
LOAD	Secures access to the LOAD action of the CPROG views and the PROGRAM display. It also secures the CICS LOAD PROGRAM command in the MAINVIEW AutoOPERATOR IMFEXEC API and Rule Processor. **Resource Name:** *prefix.ssid*.CICS.target.ALTPROG.PGMLOAD	MAINVIEW for CICS AO for CICS
NEWCOPY	Secures access to the NEWCOPY action of the CPROG views and the PROGRAM display. It also secures the CICS NEWCOPY PROGRAM command in the MAINVIEW AutoOPERATOR IMFEXEC API and Rule Processor. **Resource Name:** *prefix.ssid*.CICS.target.ALTPROG.NEWCOPY	MAINVIEW for CICS AO for CICS
USERKEY	Secures access to the USERKEY action of the CPROG views and the PROGRAM display. **Resource Name:** *prefix.ssid*.CICS.target.ALTPROG.USEPROG	MAINVIEW for CICS

Table 3. CICS Action Services (Continued)

Action	Description	Affects products
STORAGE		
ALTER	Secures access to the ALTER action of the STORAGE service. It also secures the CICS ALTERVS command in the MAINVIEW AutoOPERATOR IMFEXEC API and Rule Processor. **Resource Name:** *prefix.ssid.*CICS.target.ALTER.ALTERVS	MAINVIEW for CICS AO for CICS
SYSTEM SETTINGS		
SET SYSTEM APK	Secures access to the SET command on the CREGSYS view when the Auto Keypoint Frequency field has been modified. It also secures the CICS ALTER SYSTEM AKP command in the MAINVIEW AutoOPERATOR IMFEXEC API and Rule Processor. **Resource Name:** *prefix.ssid.*CICS.target.SETSYS.APK	MAINVIEW for CICS AO for CICS
SET SYSTEM DSALIMIT	Secures access to the SET command on the CREGSYS view when the DSA Limit field has been modified. It also secures the CICS ALTER SYSTEM DSALIMIT command in the MAINVIEW AutoOPERATOR IMFEXEC API and Rule Processor. **Resource Name:** *prefix.ssid.*CICS.target.SETSYS.DSALIM	MAINVIEW for CICS AO for CICS
SET SYSTEM DTRPROGRAM	Secures access to the SET command on the CREGSYS view when the DTR Program Name field has been modified. It also secures the CICS ALTER SYSTEM DTRPROGRAM command in the MAINVIEW AutoOPERATOR IMFEXEC API and Rule Processor. **Resource Name:** *prefix.ssid.*CICS.target.SETSYS.DTRPROG	MAINVIEW for CICS AO for CICS
SET SYSTEM DUMPING	Secures access to the SET command on the CREGSYS view when the System Dump Option field has been modified. It also secures the CICS ALTER SYSTEM DUMPING command in the MAINVIEW AutoOPERATOR IMFEXEC API and Rule Processor. **Resource Name:** *prefix.ssid.*CICS.target.SETSYS.DUMPING	MAINVIEW for CICS AO for CICS
SET SYSTEM EDSALIMIT	Secures access to the SET command on the CREGSYS view when the EDSA Limit field has been modified. It also secures the CICS ALTER SYSTEM EDSALIMIT command in the MAINVIEW AutoOPERATOR IMFEXEC API and Rule Processor. **Resource Name:** *prefix.ssid.*CICS.target.SETSYS.EDSALIM	MAINVIEW for CICS AO for CICS
SET SYSTEM FORCEQR	Secures access to the SET command on the CREGSYS view when the Quasi Reentrant Option field has been modified. It also secures the CICS ALTER SYSTEM FORCEQR command in the MAINVIEW AutoOPERATOR IMFEXEC API and Rule Processor. **Resource Name:** *prefix.ssid.*CICS.target.SETSYS.FORCEQR	MAINVIEW for CICS AO for CICS

Table 3. CICS Action Services (Continued)

Action	Description	Affects products
SET SYSTEM MAXTASKS	Secures access to the SET command on • the CREGSYS view when the Maximum Tasks field has been modified • the CTRNCLA view when the Maximum Active Tasks field has been modified for transaction class DFHTCL00 **Resource Name:** *prefix.ssid*.CICS.target.SETSYS.MAXTASK	MAINVIEW for CICS
SET SYSTEM PROGAUTOCTLG	Secures access to the SET command on the CREGSYS view when the Program Autoinstall - Catalog Option field has been modified. It also secures the CICS ALTER SYSTEM PROGAUTOCTLG command in the MAINVIEW AutoOPERATOR IMFEXEC API and Rule Processor. **Resource Name:** *prefix.ssid*.CICS.target.SETSYS.PGACTLG	MAINVIEW for CICS AO for CICS
SET SYSTEM PROGAUTOEXIT	Secures access to the SET command on the CREGSYS view when the Program Autoinstall - Exit Name field has been modified. It also secures the CICS ALTER SYSTEM PROGAUTOEXIT command in the MAINVIEW AutoOPERATOR IMFEXEC API and Rule Processor. **Resource Name:** *prefix.ssid*.CICS.target.SETSYS.PGAEXIT	MAINVIEW for CICS AO for CICS
SET SYSTEM PROGAUTOINST	Secures access to the SET command on the CREGSYS view when the Program Autoinstall - State field has been modified. It also secures the CICS ALTER SYSTEM PROGAUTOINST command in the MAINVIEW AutoOPERATOR IMFEXEC API and Rule Processor. **Resource Name:** *prefix.ssid*.CICS.target.SETSYS.PGASTAT	MAINVIEW for CICS AO for CICS
SET SYSTEM PRTYAGING	Secures access to the SET command on the CREGSYS view when the Priority Aging Rate field has been modified. It also secures the CICS ALTER SYSTEM PRTYAGING command in the MAINVIEW AutoOPERATOR IMFEXEC API and Rule Processor. **Resource Name:** *prefix.ssid*.CICS.target.SETSYS.PRTYAGE	MAINVIEW for CICS AO for CICS
SET SYSTEM RUNAWAY	Secures access to the SET command on the CREGSYS view when the Runaway Task Time field has been modified. It also secures the CICS ALTER SYSTEM RUNAWAY command in the MAINVIEW AutoOPERATOR IMFEXEC API and Rule Processor. **Resource Name:** *prefix.ssid*.CICS.target.SETSYS.RUNAWAY	MAINVIEW for CICS AO for CICS

Table 3. CICS Action Services (Continued)

Action	Description	Affects products
SET SYSTEM SCANDELAY	Secures access to the SET command on the CREGSYS view when the Terminal Scan Delay Limit field has been modified. It also secures the CICS ALTER SYSTEM SCANDELAY command in the MAINVIEW AutoOPERATOR IMFEXEC API and Rule Processor. **Resource Name:** *prefix.ssid*.CICS.target.SETSYS.SCANDEL	MAINVIEW for CICS AO for CICS
SET SYSTEM TIME	Secures access to the SET command on the CREGSYS view when the ICV WAIT Time field has been modified. It also secures the CICS ALTER SYSTEM TIME command in the MAINVIEW AutoOPERATOR IMFEXEC API and Rule Processor. **Resource Name:** *prefix.ssid*.CICS.target.SETSYS.TIME	MAINVIEW for CICS AO for CICS
TASK		
KILL	Secures access to the CANCEL and PURGE actions of the TASK views and the TASK, ENQUEUE, TERMINAL, CONSOLES, and CONNXPND displays. It also secures the CICS KILL TASK command in the MAINVIEW AutoOPERATOR IMFEXEC API and Rule Processor. **Resource Name:** *prefix.ssid*.CICS.target.ALTTASK.KILCEMT	MAINVIEW for CICS AO for CICS
INDEPENDENT KILL	Secures access to the FORCE and KILL actions of the TASK views and the TASK, ENQUEUE, TERMINAL, CONSOLES, and CONNXPND displays. It also secures the CICS KILL command in the MAINVIEW AutoOPERATOR IMFEXEC API and Rule Processor. **Resource Name:** *prefix.ssid*.CICS.target.ALTTASK.KILL	MAINVIEW for CICS AO for CICS
TCPIP Service		
SET TCPIPSERVICE	BACKLOG Secures access to the SET command on the CTCPSRV view when the Maximum Backlog field is modified. **Resource Name:** *prefix.ssid*.CICS.target.SETTCPS.BACKLOG	MAINVIEW for CICS
SET TCPIPSERVICE DNSSTATUS	Secures access to the SET command on the CTCPSRV view when the WLM DNS Status field is modified. **Resource Name:** *prefix.ssid*.CICS.target.SETTCPS.DNSSTAT	MAINVIEW for CICS
SET TCPIPSERVICE OPENSTATUS	Secures access to the SET command on the CTCPSRV view when the Open Status field is modified (the service is opened or closed). **Resource Name:** *prefix.ssid*.CICS.target.SETTCPS.OPENST	MAINVIEW for CICS
SET TCPIPSERVICE URM	Secures access to the SET command on the CTCPSRV view when the User Replaceable Module field is modified. **Resource Name:** *prefix.ssid*.CICS.target.SETTCPS.URM	MAINVIEW for CICS

Table 3. CICS Action Services (Continued)

Action	Description	Affects products
TERMINAL		
ACQUIRE	Secures access to the ACQUIRE terminal action of the CTERM views and the TERMINAL and CONSOLES displays. It also secures the CICS ACQUIRE TERMINAL command in the MAINVIEW AutoOPERATOR IMFEXEC API and Rule Processor. **Resource Name:** *prefix.ssid.*CICS.target.ALTTERM.ACQTERM	MAINVIEW for CICS AO for CICS
RELEASE	Secures access to the RELEASE terminal action of the CTERM views and the TERMINAL and CONSOLES displays. It also secures the CICS RELEASE TERMINAL command in the MAINVIEW AutoOPERATOR IMFEXEC API and Rule Processor. **Resource Name:** *prefix.ssid.*CICS.target.ALTTERM.RELTERM	MAINVIEW for CICS AO for CICS
INSERVE	Secures access to the INSERVE terminal action of the CTERM views and the TERMINAL and CONSOLES displays. It also secures the CICS INSERVE TERMINAL command in the MAINVIEW AutoOPERATOR IMFEXEC API and Rule Processor. **Resource Name:** *prefix.ssid.*CICS.target.ALTTERM.INSTERM	MAINVIEW for CICS AO for CICS
OUTSERVE	Secures access to the OUTSERVE terminal action of the CTERM views and the TERMINAL and CONSOLES displays. It also secures the CICS OUTSERVE TERMINAL command in the MAINVIEW AutoOPERATOR IMFEXEC API and Rule Processor. **Resource Name:** *prefix.ssid.*CICS.target.ALTTERM.OUTTERM	MAINVIEW for CICS AO for CICS
TRANSACTION		
CICSKEY	Secures access to the CICSKEY action of the CTRAN views and the TRANSACTION display. It also secures the CICS CICSKEY command in the MAINVIEW AutoOPERATOR IMFEXEC API and Rule Processor. **Resource Name:** *prefix.ssid.*CICS.target.ALTTRAN.CICTRAN	MAINVIEW for CICS AO for CICS
DISABLE	Secures access to the DISABLE action of the CTRAN views and the TRANSACTION display. It also secures the CICS DISABLE TRAN command in the MAINVIEW AutoOPERATOR IMFEXEC API and Rule Processor. **Resource Name:** *prefix.ssid.*CICS.target.ALTTRAN.DISTRAN	MAINVIEW for CICS AO for CICS
ENABLE	Secures access to the ENABLE action of the CTRAN views and the TRANSACTION display. It also secures the CICS ENABLE TRAN command in the MAINVIEW AutoOPERATOR IMFEXEC API and Rule Processor. **Resource Name:** *prefix.ssid.*CICS.target.ALTTRAN.ENATRAN	MAINVIEW for CICS AO for CICS

Table 3. CICS Action Services (Continued)

Action	Description	Affects products
NONPURGE	Secures access to the NONPURGE action of the CTRAN views and the TRANSACTION display. It also secures the CICS SPURGE *tran_id* NO command in the MAINVIEW AutoOPERATOR IMFEXEC API and Rule Processor. **Resource Name:** *prefix.ssid.*CICS.target.ALTTRAN.NONTRAN	MAINVIEW for CICS AO for CICS
PURGE	Secures access to the PURGE action of the CTRAN views and the TRANSACTION display. It also secures the CICS SPURGE *tran_id* YES command in the MAINVIEW AutoOPERATOR IMFEXEC API and Rule Processor. **Resource Name:** *prefix.ssid.*CICS.target.ALTTRAN.PURTRAN	MAINVIEW for CICS AO for CICS
USERKEY	Secures access to the USERKEY action of the CTRAN views and the TRANSACTION display. **Resource Name:** *prefix.ssid.*CICS.target.ALTTRAN.USETRAN	MAINVIEW for CICS
ISOLATE	Secures access to the ISOLATE action of the CTRAN views and the TRANSACTION display. It also secures the CICS ISOLATE command in the MAINVIEW AutoOPERATOR IMFEXEC API and Rule Processor. **Resource Name:** *prefix.ssid.*CICS.target.ALTTRAN.ISOTRAN	MAINVIEW for CICS AO for CICS
NOISOLATE	Secures access to the NOISOLATE action of the CTRAN views and the TRANSACTION display. **Resource Name:** *prefix.ssid.*CICS.target.ALTTRAN.NOITRAN	MAINVIEW for CICS
TRANSACTION CLASS		
SET TRANCLASS MAXACTIVE	Secures access to the SET command on the CTRNCLA view when the Maximum Active Tasks field has been modified for any transaction class other than DFHTCL00. It also secures the CICS ALTER TCLASS MAXACTIVE command in the MAINVIEW AutoOPERATOR IMFEXEC API and Rule Processor. **Resource Name:** *prefix.ssid.*CICS.target.SETTCLA.MAXACT	MAINVIEW for CICS AO for CICS
SET TRANCLASS PURGETHRESH	Secures access to the SET command on the CTRNCLA view when the Queue Purge Threshold field has been modified. It also secures the CICS ALTER TCLASS PURGETRESH command in the MAINVIEW AutoOPERATOR IMFEXEC API and Rule Processor. **Resource Name:** *prefix.ssid.*CICS.target.SETTCLA.PURTHSH	MAINVIEW for CICS AO for CICS

Table 3. CICS Action Services (Continued)

Action	Description	Affects products
TSUT		
PURGE TS	Secures access to the PURGE TS action of the TSQUEUE views and the TSUT service. It also secures the CICS PURGE TSUT command in the MAINVIEW AutoOPERATOR IMFEXEC API and Rule Processor. **Resource Name:** *prefix.ssid.*CICS.target.ALTTSUT.PURGETS	MAINVIEW for CICS AO for CICS

Resources for CMF MONITOR

For information on controlling access to the views in the CMF MONITOR online component, refer to Part 3, "Enhanced Security".

For information on controlling access to the screens provided by the CMFMON component, refer to the *CMF MONITOR Customization Guide*.

Resources for MAINVIEW AutoOPERATOR: Advanced Security

To implement advanced security for MAINVIEW AutoOPERATOR, you must secure the appropriate resources listed in Table 1 on page 17 before you can implement security for the additional resources listed in Table 4. Implementing security at this level is an optional, additional step.

MAINVIEW AutoOPERATOR product security can be implemented with up to five additional features and you can implement security for any or all five features by following the three-phase process described earlier in the book.

Table 4. List of Features for MAINVIEW AutoOPERATOR Advanced Security

Feature name	Description
APPL	Applies to MAINVIEW AutoOPERATOR applications. This feature allows you to secure who can access MAINVIEW AutoOPERATOR applications within a terminal session such as • MAINVIEW AutoOPERATOR Basic Automation applications (the Rules Processor application, the ALERTs applications, the CSM application, and so on) • MAINVIEW AutoOPERATOR Advanced Automation applications (the OSPI application, EXEC Testing Facility, the Shared Object Facility, and so on) • MAINVIEW AutoOPERATOR for OS/390 option applications • MAINVIEW AutoOPERATOR for IMS option applications • MAINVIEW AutoOPERATOR for CICS option applications • MAINVIEW AutoOPERATOR ACCESS NV option applications **Note:** Security checking is limited to eight characters each for commands, keywords, and parameters. For more information, refer to "Resources for MAINVIEW AutoOPERATOR Applications: (FEATURE=APPL)" on page 50.
CMD	Applies to commands you can issue from a MAINVIEW AutoOPERATOR terminal session. This feature allows you to secure • IMS transactions by transaction name • IMS commands by command name • CICS transactions by command, keyword, and parameter • MVS commands by command and parameter **Note:** Security checking is limited to eight characters each for commands, keywords, and parameters. For more information, refer to "Resources for MAINVIEW AutoOPERATOR Commands and Transactions: (FEATURE=CMD)" on page 56.

Table 4. List of Features for MAINVIEW AutoOPERATOR Advanced Security (Continued)

Feature name	Description
ALRT	Allows you to secure who can delete specific ALERTs or ALERT queues by ALERT queue name. **Note:** Security checking is limited to eight characters each for commands, keywords, and parameters. For more information, refer to "Resources for MAINVIEW AutoOPERATOR ALERTs: (FEATURE=ALRT)" on page 59.
EXEC	Allows you to secure who can schedule EXECs by EXEC name from a terminal session. You can explicitly grant authority to certain users to be able to (or not be able to) schedule specific EXECs. **Note:** Security checking is limited to eight characters each for commands, keywords, and parameters. For more information, refer to "Resources for MAINVIEW AutoOPERATOR EXECs: (FEATURE=EXEC)" on page 59.
PARM	Allows you to secure who can have read-only access or update access to members in the Dynamic Parameter Manager application. **Note:** Security checking is limited to eight characters each for commands, keywords, and parameters. For more information, refer to "Resources for MAINVIEW AutoOPERATOR Parameter Data: (FEATURE=PARM)" on page 60.

Important

Security implemented at this level with any of the five features might **override** security you may have implemented from resources listed in Table 1 on page 17.

For example, you may deny access to a user to issue MVS commands (with the *prefix.ssid.*AAO.target.MVSCMD resource). However, if you grant access to this user for a specific MVS command, for example:

*prefix.ssid.*AAO.target.MVSCMD.DISPLAY.ALL

this access will be allowed.

Each of these advanced security features can be implemented independently of each other or in any combination. For example, you may choose to secure MAINVIEW AutoOPERATOR EXECs by EXEC name and secure access to MAINVIEW AutoOPERATOR applications, but not to secure any of the other features.

The following sections describe all the resources associated with each feature.

Resources for MAINVIEW AutoOPERATOR Applications: (FEATURE=APPL)

By specifying additional MAINVIEW AutoOPERATOR product security with the application (APPL) feature, you can secure the ability to access MAINVIEW AutoOPERATOR applications in a BBSEC member. See "Activating Basic Security" on page 111 for more information.

Before you can implement this MAINVIEW AutoOPERATOR APPL-level security, you must implement security for these resources:

- *prefix.ssid*.BBI.target.ACCESS
- *prefix.ssid*.AAO.target.RULEREAD
- *prefix.ssid*.AAO.target.RULEUPD
- *prefix.ssid*.AAO.target.PARMREAD
- *prefix.ssid*.AAO.target.PARMUPD
- *prefix.ssid*.AAO.target.EXEC

Additionally, you can secure the resources listed in Table 5 for greater granularity in securing access to MAINVIEW AutoOPERATOR applications.

See Table 11 on page 107 for a list of CLISTs you can use to help identify resources for APPL-level security.

Table 5. MAINVIEW AutoOPERATOR Resources: Application-Level Security

What you can secure	Description
Access to the Rules Processor application	
Read access	You can secure access to the MAINVIEW AutoOPERATOR Rules Processor application by specifying that a user cannot display the application or can access it in update or read-only mode. For users who do have access to the Rules Processor application, you may want to be able to specify who can access and take actions within the Rules Processor application and who can only read and browse the application without taking any actions. To specify read-only access, use these resource names. **Resource Name:** *prefix.ssid*.AAO.target.RULEREAD
Update access	Granting update access allows you to turn automation on and off, create rules, delete rules, enable or disable rule sets (and rules), and so on. If you grant update access, you must also explicitly grant read access. To specify update access, use these resource names. **Resource Name:** *prefix.ssid*.AAO.target.RULEUPD *prefix.ssid*.AAO.target.APPL.RULES

Table 5. MAINVIEW AutoOPERATOR Resources: Application-Level Security (Continued)

What you can secure	Description
Update the Event Statistics application	You can limit a user to displaying the Event Statistics application and viewing all the statistics the application has accumulated and prohibit the creating of rules from this panel. For example, if a user has access to the Rules Processor Event Statistics application but you do not have authority to create rules, you can only view the application and not take any action. **Resource Name:** *prefix.ssid*.AAO.target.RULEUPD *prefix.ssid*.AAO.target.APPL.EVTSTATS
Access to specific ALERT Management applications	
ALERT Status application	You can limit which users have access to the various MAINVIEW AutoOPERATOR ALERT management applications. You can also secure access to specific ALERTs and ALERT queues either in addition to these resources or independently. Refer to "Resources for MAINVIEW AutoOPERATOR ALERTs: (FEATURE=ALRT)" on page 59 for more information. **Resource Name:** *prefix.ssid*.AAO.target.APPL.ALS.STATS
ALERT Overview application	**Resource Name:** *prefix.ssid*.AAO.target.APPL.ALS.OVERVIEW
ALERT Detail application	**Resource Name:** *prefix.ssid*.AAO.target.APPL.ALS.DETAIL
Access to the EXEC Management Application	
EXEC Manager application	You can secure access to the EXEC Manager application as well as access to certain functions within the application. You can also secure the ability to schedule specific EXECs from the COMMAND line and from the MAINVIEW AutoOPERATOR EXEC Manager application either in addition to these resources or independently. Refer to "Resources for MAINVIEW AutoOPERATOR EXECs: (FEATURE=EXEC)" on page 59 for more information. **Resource Name:** *prefix.ssid*.AAO.target.APPL.EXECMGR
EXEC Testing Facility	**Resource Name:** *prefix.ssid*.AAO.target.APPL.EXECTEST
Viewing variables within the EXEC Testing Facility	**Resource Name:** *prefix.ssid*.AAO.target.APPL.EXECVAR
Browsing the EXEC	**Resource Name:** *prefix.ssid*.AAO.target.APPL.EXECBRWS

Table 5. MAINVIEW AutoOPERATOR Resources: Application-Level Security (Continued)

What you can secure	Description
Access to the Continuous State Manager application	
CSM application	You may want to secure access to the MAINVIEW AutoOPERATOR CSM application which allows you to handle IPLs, shutdowns, and the management of individual objects in your system automatically. You can secure access to primary and line commands from various points in the CSM application. **Note:** CSM makes use of various AOAnywhere commands. Make sure that any user who is authorized to access CSM resources is also authorized to access the following AOAnywhere commands: – AOEXEC MSG – AOEXEC VGET – AOEXEC VPUT For information on protecting AOAnywhere commands see “Invoking AOAnywhere commands from MAINVIEW AutoOPERATOR” on page 22.
CSM Global Overview Panel	**Resource Name:** *prefix.ssid*.AAO.target.APPL.CSM.ADMADD *prefix.ssid*.AAO.target.APPL.CSM.ADMBRWS *prefix.ssid*.AAO.target.APPL.CSM.ADMCANCL *prefix.ssid*.AAO.target.APPL.CSM.ADMCLNT *prefix.ssid*.AAO.target.APPL.CSM.ADMCNVT *prefix.ssid*.AAO.target.APPL.CSM.ADMDELT *prefix.ssid*.AAO.target.APPL.CSM.ADMDEPND *prefix.ssid*.AAO.target.APPL.CSM.ADMEDIT *prefix.ssid*.AAO.target.APPL.CSM.ADMGRP *prefix.ssid*.AAO.target.APPL.CSM.ADMREPT *prefix.ssid*.AAO.target.APPL.CSM.ADMSAVE *prefix.ssid*.AAO.target.APPL.CSM.ADMXREF *prefix.ssid*.AAO.target.APPL.CSM.OPRBOUNC *prefix.ssid*.AAO.target.APPL.CSM.OPRCALDR *prefix.ssid*.AAO.target.APPL.CSM.OPRCANCL *prefix.ssid*.AAO.target.APPL.CSM.OPREXCPT *prefix.ssid*.AAO.target.APPL.CSM.OPREXEC *prefix.ssid*.AAO.target.APPL.CSM.OPRMOVE *prefix.ssid*.AAO.target.APPL.CSM.OPRRESET *prefix.ssid*.AAO.target.APPL.CSM.OPRSTART *prefix.ssid*.AAO.target.APPL.CSM.OPRSTOP

Table 5. MAINVIEW AutoOPERATOR Resources: Application-Level Security (Continued)

What you can secure	Description
CSM Object Groups Panel	**Resource Name:** *prefix.ssid*.AAO.target.APPL.CSM.ADMADD *prefix.ssid*.AAO.target.APPL.CSM.ADMBRWS *prefix.ssid*.AAO.target.APPL.CSM.ADMBUILD *prefix.ssid*.AAO.target.APPL.CSM.ADMCLNT *prefix.ssid*.AAO.target.APPL.CSM.ADMDELT *prefix.ssid*.AAO.target.APPL.CSM.ADMDGRP *prefix.ssid*.AAO.target.APPL.CSM.ADMEDIT *prefix.ssid*.AAO.target.APPL.CSM.ADMEGRP *prefix.ssid*.AAO.target.APPL.CSM.ADMREPT *prefix.ssid*.AAO.target.APPL.CSM.OPRLIST *prefix.ssid*.AAO.target.APPL.CSM.OPRSYNC
CSM Command Line Interface	**Resource Name:** *prefix.ssid*.AAO.target.APPL.CSM.OPRBOUNC *prefix.ssid*.AAO.target.APPL.CSM.OPRCANCL *prefix.ssid*.AAO.target.APPL.CSM.OPRMOVE *prefix.ssid*.AAO.target.APPL.CSM.OPRRESET *prefix.ssid*.AAO.target.APPL.CSM.OPRSTART *prefix.ssid*.AAO.target.APPL.CSM.OPRSTOP
Access to the Automation Reporter application	
Automation Reporter application	You may want to secure access to the MAINVIEW AutoOPERATOR Automation Reporter application, which allows you to monitor automation performance on your system. **Resource Name:** *prefix.ssid.*AAO.target.APPL.AR
Access to the Shared Object Facility	
Shared Object Facility	You may want to secure access to the MAINVIEW AutoOPERATOR Shared Object Facility. **Resource Name:** *prefix.ssid.*AAO.target.APPL.SOF
Access to the Open Systems Procedural Interface	
OSPI application	You may want to secure access to the OSPI application where you can write OSPI EXECs and communicate with VTAM-based applications. **Resource Name:** *prefix.ssid.*AAO.target.APPL.OSPI
Access to the Time-Initiated EXEC Requests facility	
TI application	You may want to secure access to the Time-Initiated EXEC Requests facility, which allows you to schedule EXECs based on the time of day. **Resource Name:** *prefix.ssid.*AAO.target.APPL.TI

Table 5. MAINVIEW AutoOPERATOR Resources: Application-Level Security (Continued)

What you can secure	Description
Access to the MAINVIEW AutoOPERATOR for OS/390 option applications	
SYSTEM STATUS application	You can limit which users have access to the individual MAINVIEW AutoOPERATOR for OS/390 applications. **Resource Name:** *prefix.ssid.*AAO.target.APPL.MVS.STATUS
OPERATOR REQUESTS application	Secures access to the OPERATOR REQUESTS application. **Resource Name:** *prefix.ssid.*AAO.target.APPL.MVS.OPER
ADDRESS SPACES application	Secures access to the ADDRESS SPACES application. **Resource Name:** *prefix.ssid.*AAO.target.APPL.MVS.ADSPACE
ENQUEUE/RESERVE application	Secures access to the ENQUEUE/RESERVE application. **Resource Name:** *prefix.ssid.*AAO.target.APPL.MVS.ENQ
TAPE STATUS/CONTROL application	Secures access to the TAPE STATUS/CONTROL application. **Resource Name:** *prefix.ssid.*AAO.target.APPL.MVS.TAPE
DASD STATUS/CONTROL application	Secures access to the DASD STATUS/CONTROL application. **Resource Name:** *prefix.ssid.*AAO.target.APPL.MVS.DASD
VTAM MAJOR NODES application	Secures access to the VTAM MAJOR NODES application. **Resource Name:** *prefix.ssid.*AAO.target.APPL.VTAM.MAJNODE
VTAM APPLICATIONS application	Secures access to the VTAM APPLICATIONS application. **Resource Name:** *prefix.ssid.*AAO.target.APPL.VTAM.APPLS
VTAM CDRMS application	Secures access to the VTAM CDRMS application. **Resource Name:** *prefix.ssid.*AAO.target.APPL.VTAM.CDRMS
VTAM CDRSCS application	Secures access to the VTAM CDRSCS application. **Resource Name:** *prefix.ssid.*AAO.target.APPL.VTAM.CDRSCS
VTAM LINES application	Secures access to the VTAM LINES application. **Resource Name:** *prefix.ssid.*AAO.target.APPL.VTAM.LINES
VTAM CLUSTERS application	Secures access to the VTAM CLUSTERS application. **Resource Name:** *prefix.ssid.*AAO.target.APPL.VTAM.CLSTRS
VTAM TERMINALS application	Secures access to the VTAM TERMINALS application. **Resource Name:** *prefix.ssid.*AAO.target.APPL.VTAM.TERMS

Table 5. MAINVIEW AutoOPERATOR Resources: Application-Level Security (Continued)

What you can secure	Description
Access to MAINVIEW AutoOPERATOR for CICS option applications	
CICS Status application	You can limit which users have access to the individual MAINVIEW AutoOPERATOR for CICS option applications. **Resource Name:** *prefix.ssid.*AAO.target.APPL.CICS.STATUS
CICS Broadcast application	**Resource Name:** *prefix.ssid.*AAO.target.APPL.CICS.BRDCST
Access to the MAINVIEW AutoOPERATOR for IMS option applications	
IMS REGIONS application	You can limit which users have access to the MAINVIEW AutoOPERATOR for IMS applications. **Resource Name:** *prefix.ssid.*AAO.target.APPL.IMS.REGIONS
IMS DATABASE application	**Resource Name:** *prefix.ssid.*AAO.target.APPL.IMS.DATABASE
IMS STATUS application	**Resource Name:** *prefix.ssid.*AAO.target.APPL.IMS.STATUS
IMS AREA application	**Resource Name:** *prefix.ssid.*AAO.target.APPL.IMS.AREA
IMS DEDB application	**Resource Name:** *prefix.ssid.*AAO.target.APPL.IMS.DEDB
IMS ISC application	**Resource Name:** *prefix.ssid.*AAO.target.APPL.IMS.ISC
IMS LINES application	**Resource Name:** *prefix.ssid.*AAO.target.APPL.IMS.LINES
IMS LTERMS application	**Resource Name:** *prefix.ssid.*AAO.target.APPL.IMS.LTERMS
IMS MSDB application	**Resource Name:** *prefix.ssid.*AAO.target.APPL.IMS.MSDB
IMS NODES application	**Resource Name:** *prefix.ssid.*AAO.target.APPL.IMS.NODES
IMS PROGRAM application	**Resource Name:** *prefix.ssid.*AAO.target.APPL.IMS.PROGRAM
IMS REGION application	**Resource Name:** *prefix.ssid.*AAO.target.APPL.IMS.REGION
IMS RTCODE application	**Resource Name:** *prefix.ssid.*AAO.target.APPL.IMS.RTCODE
IMS TRANSACTION application	**Resource Name:** *prefix.ssid.*AAO.target.APPL.IMS.TRAN
IMS NETWORK application	**Resource Name:** *prefix.ssid.*AAO.target.APPL.IMS.NET
Access to the MAINVIEW AutoOPERATOR ACCESS NV option applications	
ACCESS NV	You can limit which users have access to the NetView Operator Workstation application. **Resource Name:** *prefix.ssid.*AAO.target.APPL.ANV

Table 5. MAINVIEW AutoOPERATOR Resources: Application-Level Security (Continued)

What you can secure	Description
Access to the TapeSHARE for AutoOPERATOR option	
TapeSHARE Workstation	You can limit which users have access to the TapeSHARE Workstation application. **Resource Name:** *prefix.ssid.*AAO.target.APPL.TAPSHR
Access to the MAINVIEW AutoOPERATOR for MQSeries option	
MAINVIEW AutoOPERATOR for MQSeries Workstation	You can limit which users have access to the MAINVIEW AutoOPERATOR for MQSeries Workstation application. **Resource Name:** *prefix.ssid.*AAO.target.APPL.MQSERIES

Resources for MAINVIEW AutoOPERATOR Commands and Transactions: (FEATURE=CMD)

By specifying additional MAINVIEW AutoOPERATOR product security with the command (CMD) feature, you can secure the ability to issue specific commands and transactions from MAINVIEW AutoOPERATOR terminal sessions.

Before you can implement this MAINVIEW AutoOPERATOR CMD-level security, you must implement security for these resources:

- *prefix.ssid.*BBI.target.ACCESS
- *prefix.ssid.*BBI.target.BBICMD
- *prefix.ssid.*AAO.target.MVSCMD
- *prefix.ssid.*AAO.target.CICSTRAN
- *prefix.ssid.*AAO.target.IMSTRAN
- *prefix.ssid.*AAO.target.IMSCMD
- *prefix.ssid.*AAO.target.IMSMSG
- *prefix.ssid.*AAO.target.RESAUTH

Additionally, you can secure the resources listed in Table 6 on page 57 for greater granularity in securing commands and transactions.

See Table 11 on page 107 for a list of CLISTs you can use to help identify resources for CMD-level security.

Table 6. MAINVIEW AutoOPERATOR Resources: Command-Level Security

What you can secure	Description
Invoking CICS transactions	Secures invoking of specific CICS transactions from a MAINVIEW AutoOPERATOR terminal session by CICS transaction name. You must create a separate security definition for each CICS transaction that you secure. **Resource Name:** *prefix.ssid*.AAO.target.CICSTRAN.command This resource name may include a command name that is more than eight characters long, but security checking checks **only the first eight characters of the command name.**
Invoking IMS transactions	Secures invoking of specific IMS transactions from a MAINVIEW AutoOPERATOR terminal session by IMS transaction name. You must create a separate security definition for each IMS transaction that you secure. **Resource Name:** *prefix.ssid*.AAO.target.IMSTRAN.command This resource name may include a transaction name that is more than eight characters long, but security checking checks **only the first eight characters of the command and the first eight bytes of each parameter (if any).**

Table 6. MAINVIEW AutoOPERATOR Resources: Command-Level Security (Continued)

Invoking IMS commands	Secures invoking of specific IMS commands from a MAINVIEW AutoOPERATOR terminal session by IMS command name and two parameters. You must create a separate security definition for each IMS command and parameter that you secure. **Note:** If you are securing these resources in a security class of DATASET, the ESM will not check the value of the two parameters. Only the command name is checked. **Resource Name:** *prefix.ssid*.AAO.target.IMSCMD.command.parameter.parameter This resource name may include command names and parameter names that are more than eight characters long, but security checking checks **only the first eight characters of the command and the first eight bytes of each parameter (if any)**.
Invoking MVS commands	Secures invoking of specific MVS commands from a MAINVIEW AutoOPERATOR terminal session by MVS command name and one parameter. **Note:** If you are securing these resources in a security class of DATASET, the ESM will not check the value of the command and the parameter. Only the command name is checked. You must create a separate security definition for each MVS command and parameter that you secure. **Resource Name:** *prefix.ssid*.AAO.target.MVSCMD.command.parameter This resource name may include command names and parameter names that are more than eight characters long, but security checking checks **only the first eight characters of the command name and additional parameter names.**

Resources for MAINVIEW AutoOPERATOR ALERTs: (FEATURE=ALRT)

By choosing the ALRT feature of MAINVIEW AutoOPERATOR-level security, you are choosing to secure a user's ability to delete ALERTs and ALERT queues through the MAINVIEW AutoOPERATOR ALERT Detail and ALERT STATS applications.

The resource names are as follows:

- *prefix.ssid*.AAO.target.ALRT.DE.*queuename*

  Use this resource to secure ALERTs by their queue name. Every MAINVIEW AutoOPERATOR ALERT belongs to a queue so, if you grant access to this resource, ALERTs within the queue can be deleted from the ALERT Detail application. If you deny access to an ALERT queue with this resource, the ALERTs within that queue cannot be deleted.

- *prefix.ssid*.AAO.target.ALRT.DEQ.*queuename*

  Use this resource to secure ALERT queues. If you grant access to this resource, the entire ALERT queue can be deleted from the ALERT STATS application. Any ALERTs within the queue are also deleted. If you deny access, the user cannot delete the queue.

See Table 11 on page 107 for a list of CLISTs you can use to help identify resources for ALRT-level security.

Resources for MAINVIEW AutoOPERATOR EXECs: (FEATURE=EXEC)

You can specify that you want to secure the ability to create and schedule, edit, and test MAINVIEW AutoOPERATOR EXECs by EXEC name. Before you can implement this MAINVIEW AutoOPERATOR EXEC-level security, you must implement security for these resources (see Table 1 on page 17).

The resource name is *prefix.ssid*.AAO.target.EXEC.

By choosing the EXEC feature of MAINVIEW AutoOPERATOR-level security, you are choosing to secure a user's ability to schedule EXECs by EXEC name from the COMMAND line during a user’s terminal session.

The resource name is *prefix.ssid*.AAO.target.EXEC.execname.

With this resource, you are also securing a user’s ability to access the EXEC from within the EXEC Manager application. This limits

- Selecting a specific EXEC for testing
- Scheduling a specific EXEC
- Browsing a specific EXEC
- Disabling a specific EXEC

When securing EXECs, it is important to note that, with only a few exceptions, **the actions scheduled within the EXEC are not secured.** For example, you may secure the ability to issue MVS commands from a specific user. However, if you allow the user to have access to an EXEC that issues an MVS command, the EXEC and the MVS command will be allowed to run completely.

There are two exceptions:

- If you secure the ability to access CICS services through the BBI-SS PAS (as seen in "Resources Common to MAINVIEW for CICS and the MAINVIEW AutoOPERATOR for CICS Option" on page 34), some CICS action services have IMFEXEC CICS statements for the MAINVIEW AutoOPERATOR for CICS option.

  These IMFEXEC CICS statements can be secured and, if they are, these restrictions **are valid in an EXEC that uses these statements.**

- If you secure MAINVIEW SYSPROG Services services

  You can invoke MAINVIEW SYSPROG Services services in an EXEC with an IMFEXEC RES statement. If the MAINVIEW SYSPROG Services service is secured, the restrictions **are valid in an EXEC that uses these statements.**

See Table 11 on page 107 for a list of CLISTs you can use to help identify resources for EXEC-level security.

Resources for MAINVIEW AutoOPERATOR Parameter Data: (FEATURE=PARM)

By choosing the PARM feature of MAINVIEW AutoOPERATOR-level security, you are choosing to secure a user's ability to update, read, delete, add, or activate MAINVIEW AutoOPERATOR parameter members through the Dynamic Parameter Manager application.

The resource names are as follows:

- *prefix.ssid*.AAO.target.PARMREAD.membername

  Allows you to specify individual members allowing read-only access.

- *prefix.ssid*.AAO.target.PARMUPD.membername

  Allows you to specify individual members allowing update access. Note that the maximum length of the member name is eight characters.

See Table 11 on page 107 for a list of CLISTs you can use to help identify resources for PARM-level security.

Resources for MAINVIEW FOCAL POINT, MAINVIEW for DBCTL, and MAINVIEW for IMS Online

At this time, there are no additional resources to be secured for MAINVIEW FOCAL POINT, MAINVIEW for DBCTL, or MAINVIEW for IMS Online. Refer to Table 1 on page 17 for a list of resources that are shared across products.

Resources for MAINVIEW for CICS

Table 7 and Table 8 describe the resources that can be secured with MAINVIEW for CICS. Refer to "Resources Common to MAINVIEW for CICS and the MAINVIEW AutoOPERATOR for CICS Option" on page 34 for a list of resources you can secure for MAINVIEW for CICS and the MAINVIEW AutoOPERATOR for CICS option.

Table 7. CICS Display Services

Service	Description
ABEND	
ABEND	Secures access to the ABEND service display. **Resource Name:** *prefix.ssid*.CICS.target.ABEND.ABEND
AID	
AID	Secures access to the Automatic Initiate Descriptor (AID) service display. **Resource Name:** *prefix.ssid*.CICS.target.AID.AID
CLASSES	
CLASSES	Secures access to the CLASS service display. **Resource Name:** *prefix.ssid*.CICS.target.CLASS.CLASSES
TSUT	
TSUT	Secures access to the TSUT service display. **Resource Name:** *prefix.ssid*.CICS.target.TSUT.TSUT
CONNECT	
CONNECT	Secures access to the CONNECT service display. **Resource Name:** *prefix.ssid*.CICS.target.CONNECT.CONNECT
CONNXPND	Secures access to the CONNXPND service display. **Resource Name:** *prefix.ssid*.CICS.target.CONNECT.CONNXPND

Table 7. CICS Display Services (Continued)

Service	Description
CONNXPN2	Secures access to the CONNXPN2 service display. **Resource Name:** *prefix.ssid*.CICS.target.CONNECT.CONNXPN2
SESSIONS	Secures access to the SESSIONS service display. **Resource Name:** *prefix.ssid*.CICS.target.CONNECT.SESSIONS
DB2SYSP	
DB2SYSP	Secures access to the DB2SYSP service display. **Resource Name:** *prefix.ssid*.CICS.target.DB2SYSP.DB2SYSP
DBCTL	Secures access to the DBCTL service display. **Resource Name:** *prefix.ssid*.CICS.target.DB2SYSP.DBCTL
MQSERIES	Secures access to the MQSERIES service display. **Resource Name:** *prefix.ssid*.CICS.target.DB2SYSP.MQSERIES
DB2TASK	
DB2TASK	Secures access to the DB2TASK service display. **Resource Name:** *prefix.ssid*.CICS.target.DB2TASK.DB2TASK
DB2TXPND	Secures access to the DB2TXPND service display. **Resource Name:** *prefix.ssid*.CICS.target.DB2TASK.DB2TXPND
DBCTASK	Secures access to the DBCTASK service display. **Resource Name:** *prefix.ssid*.CICS.target.DB2TASK.DBCTASK
MQTASK	Secures access to the MQTASK service display. **Resource Name:** *prefix.ssid*.CICS.target.DB2TASK.MQTASK
DEST	
DEST	Secures access to the DEST service display. **Resource Name:** *prefix.ssid*.CICS.target.DEST.DEST
DL/1	

Table 7. CICS Display Services (Continued)

Service	Description
DL/1	Secures access to the DL/1 service display. **Resource Name:** *prefix.ssid*.CICS.target.DLI.DLI
DUMP	
DUMP	Secures access to the DUMP service display. **Resource Name:** *prefix.ssid*.CICS.target.DUMP.DUMP
ENQUEUE	
ENQUEUE	Secures access to the ENQUEUE service display. **Resource Name:** *prefix.ssid*.CICS.target.ENQUEUE.ENQUEUE
EXITS	
EXITS	Secures access to the EXITS service display. **Resource Name:** *prefix.ssid*.CICS.target.EXITS.EXITS
FILE	
DATATABL	Secures access to the DATATABL service display. **Resource Name:** *prefix.ssid*.CICS.target.FILE.DATATABL
DDIR	Secures access to the DDIR service display. **Resource Name:** *prefix.ssid*.CICS.target.FILE.DDIR
DDIRXPND	Secures access to the DDIRXPND service display. **Resource Name:** *prefix.ssid*.CICS.target.FILE.DDIRXPND
DDIRXPN2	Secures access to the DDIRXPN2 service display. **Resource Name:** *prefix.ssid*.CICS.target.FILE.DDIRXPN2
DSNAMES	Secures access to the DSNAMES service display. **Resource Name:** *prefix.ssid*.CICS.target.FILE.DSNAMES
FILE	Secures access to the FILE service display. **Resource Name:** *prefix.ssid*.CICS.target.FILE.FILE
FILEXPND	Secures access to the FILEXPND service display. **Resource Name:** *prefix.ssid*.CICS.target.FILE.FILEXPND
FILEXPN2	Secures access to the FILEXPN2 service display. **Resource Name:** *prefix.ssid*.CICS.target.FILE.FILEXPN2

Table 7. CICS Display Services (Continued)

Service	Description
TERMINAL	
CONSOLES	Secures access to the CONSOLES service display. **Resource Name:** *prefix.ssid*.CICS.target.TERM.CONSOLES
TERMINAL	Secures access to the TERMINAL service display. **Resource Name:** *prefix.ssid*.CICS.target.TERM.TERMINAL
TERMXPND	Secures access to the TERMXPND service display. **Resource Name:** *prefix.ssid*.CICS.target.TERM.TERMXPND
HISTORY	
HISTORY	Secures access to the HISTORY service display. **Resource Name:** *prefix.ssid*.CICS.target.HISTORY.HISTORY
ICE	
ICE	Secures access to the ICE service display. **Resource Name:** *prefix.ssid*.CICS.target.ICE.ICE
JOURNAL	
JOURNAL	Secures access to the JOURNAL service display. **Resource Name:** *prefix.ssid*.CICS.target.JOURNAL.JOURNAL
MONITOR	
MONITOR	Secures access to the MONITOR service display. **Resource Name:** *prefix.ssid*.CICS.target.MONITOR.MONITOR
NUCLEUS	
LPAS	Secures access to the LPAS service display. **Resource Name:** *prefix.ssid*.CICS.target.NUCLEUS.LPAS
NUCLEUS	Secures access to the NUCLEUS service display. **Resource Name:** *prefix.ssid*.CICS.target.NUCLEUS.NUCLEUS
TCBS	Secures access to the TCBS service display. **Resource Name:** *prefix.ssid*.CICS.target.NUCLEUS.TCBS
PLAN	

Table 7. CICS Display Services (Continued)

Service	Description
PLAN	Secures access to the PLAN service display. **Resource Name:** *prefix.ssid*.CICS.target.PLAN.PLAN
PLANXPND	Secures access to the PLANXPND service display. **Resource Name:** *prefix.ssid*.CICS.target.PLAN.PLANXPND
PPST	
PPST	Secures access to the PPST service display. **Resource Name:** *prefix.ssid*.CICS.target.PPST.PPST
PROBLEM	
PROBLEM	Secures access to the PROBLEM service display. **Resource Name:** *prefix.ssid*.CICS.target.PROBLEM.PROBLEM
CSTATUS	Secures access to the CSTATUS service display. **Resource Name:** *prefix.ssid*.CICS.target.PROBLEM.CSTATUS
STATUS	Secures access to the STATUS service display. **Resource Name:** *prefix.ssid*.CICS.target.PROBLEM.STATUS
PROGRAM	
PROGRAM	Secures access to the PROGRAM service display. **Resource Name:** *prefix.ssid*.CICS.target.PROGRAM.PROGRAM
REMOTES	Secures access to the REMOTES service display. **Resource Name:** *prefix.ssid*.CICS.target.PROGRAM.REMOTES
PSBNAME	
PSB	Secures access to the PSB service display. **Resource Name:** *prefix.ssid*.CICS.target.PSB.PSBNAME
REVIEW	
REVIEW	Secures access to the REVIEW service display. **Resource Name:** *prefix.ssid*.CICS.target.REVIEW.REVIEW
SHARE	

Table 7. CICS Display Services (Continued)

Service	Description
SHARE	Secures access to the SHARE service display. **Resource Name:** *prefix.ssid*.CICS.target.SHARE.SHARE
SUBPOOL	
DSAS	Secures access to the DSAS service display. **Resource Name:** *prefix.ssid*.CICS.target.SUBPOOL.DSAS
SCAS	Secures access to the SCAS service display. **Resource Name:** *prefix.ssid*.CICS.target.SUBPOOL.SCAS
SUBPOOL	Secures access to the SUBPOOL service display. **Resource Name:** *prefix.ssid*.CICS.target.SUBPOOL.SUBPOOL
REGIONS	Secures access to the REGIONS service display. **Resource Name:** *prefix.ssid*.CICS.target.SUBPOOL.REGIONS
SUFFIX	
SUFF	Secures access to the SUFF service display. **Resource Name:** *prefix.ssid*.CICS.target.SUFFIX.SUFF
SUMMARY	
SUMMARY	Secures access to the SUMMARY service display. **Resource Name:** *prefix.ssid*.CICS.target.SUMMARY.SUMMARY
TASK	
MEMORY	Secures access to the MEMORY service display. **Resource Name:** *prefix.ssid*.CICS.target.TASK.MEMORY
TASK	Secures access to the TASK service display. **Resource Name:** *prefix.ssid*.CICS.target.TASK.TASK
TASKXPN2	Secures access to the TASKXPN2 service display. **Resource Name:** *prefix.ssid*.CICS.target.TASK.TASKXPN2
TASKXPN3	Secures access to the TASKXPN3 service display. **Resource Name:** *prefix.ssid*.CICS.target.TASK.TASKXPN3

Table 7. CICS Display Services (Continued)

Service	Description
TASKXPN4	Secures access to the TASKXPN4 service display. **Resource Name:** *prefix.ssid*.CICS.target.TASK.TASKXPN4
TASKXPND	Secures access to the TASKXPND service display. **Resource Name:** *prefix.ssid*.CICS.target.TASK.TASKXPND
TEMP	
TEMPSTRG	Secures access to the TEMPSTRG service display. **Resource Name:** *prefix.ssid*.CICS.target.TEMP.TEMPSTRG
TEMPXPND	Secures access to the TEMPXPND service display. **Resource Name:** *prefix.ssid*.CICS.target.TEMP.TEMPXPND
TIOT	
TIOT	Secures access to the TIOT service display. **Resource Name:** *prefix.ssid*.CICS.target.TIOT.TIOT
VOLUMES	Secures access to the VOLUMES service display. **Resource Name:** *prefix.ssid*.CICS.target.TIOT.VOLUMES
TRAN	
TCLASS	Secures access to the TCLASS service display. **Resource Name:** *prefix.ssid*.CICS.target.TRAN.TCLASS
TCLAXPND	Secures access to the TCLAXPND service display. **Resource Name:** *prefix.ssid*.CICS.target.TRAN.TCLAXPND
TRAN	Secures access to the TRAN service display. **Resource Name:** *prefix.ssid*.CICS.target.TRAN.TRAN
TRANXPND	Secures access to the TRANXPND service display. **Resource Name:** *prefix.ssid*.CICS.target.TRAN.TRANXPND
VTAM	
VTAM	Secures access to the VTAM service display. **Resource Name:** *prefix.ssid*.CICS.target.VTAM.VTAM

Table 8. MAINVIEW for CICS Diagnostic Services

Service	Description
DIAG	
CONFIG	Secures access to the CONFIG diagnosis service. **Resource Name:** *prefix.ssid*.CICS.target.DIAG.CONFIG
GRAFSTAT	Secures access to the GRAFSTAT diagnosis service. **Resource Name:** *prefix.ssid*.CICS.target.DIAG.GRAFSTAT
PROGSS	Secures access to the PROGSS diagnosis service. **Resource Name:** *prefix.ssid*.CICS.target.DIAG.PROGSS
QSTAT	Secures access to the QSTAT diagnosis service. **Resource Name:** *prefix.ssid*.CICS.target.DIAG.QSTAT
VALIDATE	Secures access to the VALIDATE diagnosis service. **Resource Name:** *prefix.ssid*.CICS.target.DIAG.VALIDATE

Resources for MAINVIEW for DB2

Table 9 describes the additional product security in MAINVIEW for DB2 with the command (CMD) feature. You can secure the ability to issue specific DB2 commands from a MAINVIEW for DB2 terminal session. Refer to Table 1 on page 17 for a list of resources shared across products. For information on implementing additional security with the CMD feature, refer to "Creating Resource Names for MAINVIEW for DB2 CMD-Level Security: DB2CMDDF and DB2CMDPE" on page 109.

Before you can implement CMD-level security, you must implement security for the following resource:

prefix.ssid.`BBI.target.ACCESS`

See the following table for defining resources for specific commands:

Table 9. MAINVIEW for DB2 Resources: Command-Level Security

What you can secure	Description

Invoking DB2 commands	Secures invoking of specific DB2 commands and operands from a terminal session by DB2 command name and one operand.
	
	Note: If you are securing these resources in a security class of DATASET, the ESM will not check the value of the command and the operand. Only the command name is checked.
	
	You must create a separate security definition for each DB2 command and operand that you secure.
	
	Resource Name: *prefix.ssid*.DMR.target.DB2CMD.command.operand
	
	Note: All combinations of command and operand abbreviations must be defined to secure a command; for example:
	
	`DISPLAY.THREAD`
	`DISPLAY.THD`
	`DIS.THREAD`
	`DIS.THD`

Resources for MAINVIEW Total Object Manager (TOM)

Table 10 describes the resources that can be secured for MAINVIEW Total Object Manager (TOM). You need to be aware of the following considerations:

- Requests from the AOAnywhere API or the ISPF user interface can be routed to a remote TOM for execution. For example, from system A a user can issue this command to start a set on system B:

  `AOEXEC TOM START SET(set_name) HOST(SYSB)`

  In this case, the user needs permission for *prefix.xcfgroup*.TOM.ACCESS and *prefix.xcfgroup*.TOM.SET.START on both the sending and receiving system images.

- Security is called only once for operations against a TOM set. If the user has authority to access the set, then no additional security checks are performed against individual objects within the set.

Table 10. MAINVIEW Total Object Manager (TOM) Resources

What you can secure	Description
Access to TOM	Secures access to MAINVIEW Total Object Manager (TOM). Access to this resource is always checked before access to a specific TOM resource is checked. **Resource Name:** *prefix.xcfgroup*.TOM.ACCESS
AOAnywhere API Only	
Get Object	Secures access to AOEXEC TOM Function(Get) Obj(*name*). **Resource Name:** *prefix.xcfgroup*.TOM.OBJ.BROWSE
Get Set	Secures access to AOEXEC TOM Function(Get) Set(*name*). **Resource Name:** *prefix.xcfgroup*.TOM.SET.BROWSE
List	Secures access to AOEXEC TOM Function(List). **Resource Name:** *prefix.xcfgroup*.TOM.API.LIST
Set Property	Secures access to AOEXEC TOM Function(SetProperty). **Resource Name:** *prefix.xcfgroup*.TOM.API.SETPROP
Shutdown System	Secures access to AOEXEC TOM Function(ShutSys). **Resource Name:** *prefix.xcfgroup*.TOM.SHUTSYS
System Console Commands (F *tom_id*,CMD *xxx*) and AOAnywhere API (AOEXEC TOM Function(*yyy*))	
Objects	
Block Object	Secures access to Block Object. **Resource Name:** *prefix.xcfgroup*.TOM.OBJ.BLOCK

Table 10. MAINVIEW Total Object Manager (TOM) Resources (Continued)

What you can secure	Description
Bounce Object	Secures access to Bounce Object. **Resource Name:** *prefix.xcfgroup*.TOM.OBJ.BOUNCE
Change Object Status	Secures access to Change Object Status. **Resource Name:** *prefix.xcfgroup*.TOM.OBJ.CHSTATUS
Lock Object	Secures access to Lock Object. **Resource Name:** *prefix.xcfgroup*.TOM.OBJ.LOCK
Move Object	Secures access to Move Object. **Resource Name:** *prefix.xcfgroup*.TOM.OBJ.MOVE
Reset Object	Secures access to Reset Object. **Resource Name:** *prefix.xcfgroup*.TOM.OBJ.RESET
Start Object	Secures access to Start Object. **Resource Name:** *prefix.xcfgroup*.TOM.OBJ.START
Stop Object	Secures access to Stop Object. **Resource Name:** *prefix.xcfgroup*.TOM.OBJ.STOP
Suspend Object	Secures access to Suspend Object. **Resource Name:** *prefix.xcfgroup*.TOM.OBJ.SUSPEND
Unblock Object	Secures access to Unblock Object. **Resource Name:** *prefix.xcfgroup*.TOM.OBJ.UNBLOCK
Unlock Object	Secures access to Unlock Object. **Resource Name:** *prefix.xcfgroup*.TOM.OBJ.UNLOCK
Sets	
Activate Set	Secures access to Activate Set. **Resource Name:** *prefix.xcfgroup*.TOM.SET.ACTIVATE
Block Set	Secures access to Block Set. **Resource Name:** *prefix.xcfgroup*.TOM.SET.BLOCK
Bounce Set	Secures access to Bounce Set. **Resource Name:** *prefix.xcfgroup*.TOM.SET.BOUNCE

Table 10. MAINVIEW Total Object Manager (TOM) Resources (Continued)

What you can secure	Description
Lock Set	Secures access to Lock Set. **Resource Name:** *prefix.xcfgroup*.TOM.SET.LOCK
Move Set	Secures access to Move Set. **Resource Name:** *prefix.xcfgroup*.TOM.SET.MOVE
Reset Set	Secures access to Reset Set. **Resource Name:** *prefix.xcfgroup*.TOM.SET.RESET
Shutdown Set	Secures access to Shut Set. **Resource Name:** *prefix.xcfgroup*.TOM.SET.SHUTSET
Start Set	Secures access to Start Set. **Resource Name:** *prefix.xcfgroup*.TOM.SET.START
Stop Set	Secures access to Stop Set. **Resource Name:** *prefix.xcfgroup*.TOM.SET.STOP
Suspend Set	Secures access to Suspend Set. **Resource Name:** *prefix.xcfgroup*.TOM.SET.SUSPEND
Unblock Set	Secures access to Unblock Set. **Resource Name:** *prefix.xcfgroup*.TOM.SET.UNBLOCK
Unlock Set	Secures access to Unlock Set. **Resource Name:** *prefix.xcfgroup*.TOM.SET.UNLOCK
ISPF User Interface - Administration	
Administration Options Menu	Secures access to the TOM Administration Options menu. **Resource Name:** *prefix.xcfgroup*.TOM.ISPF.ADMIN
Conversion Option	Secures access to the Conversion administrative option. **Resource Name:** *prefix.xcfgroup*.TOM.ADMIN.CONV
Definitions Option	Secures access to the Definitions administrative option. **Resource Name:** *prefix.xcfgroup*.TOM.ADMIN.DB
Systems Option	Secures access to the Systems administrative option. **Resource Name:** *prefix.xcfgroup*.TOM.ADMIN.SYS

Table 10. MAINVIEW Total Object Manager (TOM) Resources (Continued)

What you can secure	Description
ISPF User Interface - Calendar	
Calendar Bases Menu	Secures access to the TOM Calendar Bases menu. **Resource Name:** *prefix.xcfgroup*.TOM.ISPF.CALENDAR
Add Calendar	Secures access to the Add calendar command. **Resource Name:** *prefix.xcfgroup*.TOM.CLND.ADD
Activate Calendar	Secures access to the Activate calendar command. **Resource Name:** *prefix.xcfgroup*.TOM.CLND.ACTIVATE
Delete Calendar	Secures access to the Delete calendar command. **Resource Name:** *prefix.xcfgroup*.TOM.CLND.DELETE
Edit Calendar	Secures access to the Edit calendar command. **Resource Name:** *prefix.xcfgroup*.TOM.CLND.EDIT
Validate Calendar	Secures access to the Validate calendar command. **Resource Name:** *prefix.xcfgroup*.TOM.CLND.VALIDATE
ISPF User Interface - Definition Databases	
Activate Definition Database	Secures access to the Activate definition database command. **Resource Name:** *prefix.xcfgroup*.TOM.DB.ACTIVATE
Add Definition Database	Secures access to the Add and Repeat definition database commands. **Resource Name:** *prefix.xcfgroup*.TOM.DB.ADD
Delete Definition Database	Secures access to the Delete definition database command. **Resource Name:** *prefix.xcfgroup*.TOM.DB.DELETE
Switch Definition Database	Secures access to the Switch definition database command. **Resource Name:** *prefix.xcfgroup*.TOM.DB.SWITCH
ISPF User Interface - Layer Management	
Layer Management Menu	Secures access to the TOM Layer Management menu. **Resource Name:** *prefix.xcfgroup*.TOM.ADMIN.LAYR
System Layers Menu	Secures access to the System Layers (Define Object Groups) menu. **Resource Name:** *prefix.xcfgroup*.TOM.ADMIN.LAYR.OBJ.GRP

Table 10. MAINVIEW Total Object Manager (TOM) Resources (Continued)

What you can secure	Description
System Layer Objects	Secures access to system layer objects. **Resource Name:** *prefix.xcfgroup*.TOM.ADMIN.LAYR.OBJ.GRP.OBJECT
System Layer Sets	Secures access to system layer sets. **Resource Name:** *prefix.xcfgroup*.TOM.ADMIN.LAYR.OBJ.GRP.SET
System Layer - Delete	Secures access to the Delete system layer command. **Resource Name:** *prefix.xcfgroup*.TOM.ADMIN.LAYR.OBJ.GRP.DEL
Sysplex Layers Menu	Secures access to the Sysplex Layers (Define System Groups) menu. **Resource Name:** *prefix.xcfgroup*.TOM.ADMIN.LAYR.SYS.GRP
Sysplex Layer - Add	Secures access to the Add sysplex layer command. **Resource Name:** *prefix.xcfgroup*.TOM.ADMIN.LAYR.SYS.GRP.ADD
Sysplex Layer - Delete	Secures access to the Delete sysplex layer command. **Resource Name:** *prefix.xcfgroup*.TOM.ADMIN.LAYR.SYS.GRP.DELETE
Sysplex Layer - Manage	Secures access to the Manage sysplex layer command. **Resource Name:** *prefix.xcfgroup*.TOM.ADMIN.LAYR.SYS.GRP.MANAGE
Sysplex Matrix Menu	Secures access to the Sysplex Matrix (Manage System Definitions) menu. **Resource Name:** *prefix.xcfgroup*.TOM.ADMIN.LAYR.SYS.DEF
Sysplex - Add	Secures access to the Add sysplex command. **Resource Name:** *prefix.xcfgroup*.TOM.ADMIN.LAYR.SYS.DEF.ADD
Sysplex - Attach Sysplex Layer	Secures access to the Attach sysplex layer to sysplex command. **Resource Name:** *prefix.xcfgroup*.TOM.ADMIN.LAYR.SYS.DEF.ATTACH
Sysplex - Delete	Secures access to the Delete sysplex command. **Resource Name:** *prefix.xcfgroup*.TOM.ADMIN.LAYR.SYS.DEF.DEL
Sysplex - Manage	Secures access to the Manage systems in sysplex command. **Resource Name:** *prefix.xcfgroup*.TOM.ADMIN.LAYR.SYS.DEF.MANAGE
Sysplex - Manage - Add System	Secures access to the Add system command. **Resource Name:** *prefix.xcfgroup*.TOM.ADMIN.LAYR.SYS.DEF.MANAGE.ADD

Table 10. MAINVIEW Total Object Manager (TOM) Resources (Continued)

What you can secure	Description
Sysplex - Manage - Attach System Layer	Secures access to the Attach system layer command. **Resource Name:** *prefix.xcfgroup*.TOM.ADMIN.LAYR.SYS.DEF.MANAGE.ATTACH
Sysplex - Manage - Delete System	Secures access to the Delete system command. **Resource Name:** *prefix.xcfgroup*.TOM.ADMIN.LAYR.SYS.DEF.MANAGE.DEL
ISPF User Interface - Log and Messages	
TOM Log	Secures access to the log that is produced by TOM. **Resource Name:** *prefix.xcfgroup*.TOM.ISPF.LOG
TOM Messages	Secures access to the messages that are issued by TOM. **Resource Name:** *prefix.xcfgroup*.TOM.ISPF.MESSAGES
ISPF User Interface - Objects	
Started Task Menu	Secures access to the TOM Started Task menu. **Resource Name:** *prefix.xcfgroup*.TOM.ISPF.STC
Activate Object	Secures access to the Activate object command. **Resource Name:** *prefix.xcfgroup*.TOM.OBJ.ACTIVATE
Add Object	Secures access to the Add, Insert, and Repeat object commands. **Resource Name:** *prefix.xcfgroup*.TOM.OBJ.ADD
Block Object	Secures access to the Block and Unblock object commands. **Resource Name:** *prefix.xcfgroup*.TOM.OBJ.BLOCK
Bounce Object	Secures access to the Bounce object command. **Resource Name:** *prefix.xcfgroup*.TOM.OBJ.BOUNCE
Browse Object	Secures access to the Browse object command. **Resource Name:** *prefix.xcfgroup*.TOM.OBJ.BROWSE
Change Object Status	Secures access to the Change Object Status command. **Resource Name:** *prefix.xcfgroup*.TOM.OBJ.CHSTATUS
Delete Object	Secures access to the Delete and Delete Block object commands. **Resource Name:** *prefix.xcfgroup*.TOM.OBJ.DELETE

Table 10. MAINVIEW Total Object Manager (TOM) Resources (Continued)

What you can secure	Description
Edit Object	Secures access to the Edit object command. **Resource Name:** *prefix.xcfgroup*.TOM.OBJ.EDIT
Edit Object - Model Type Field	Secures access to the Edit object command. **Resource Name:** *prefix.xcfgroup*.TOM.OBJ.EDIT.MDLTYPE
Evaluate Object	Secures access to the Evaluate object command. **Resource Name:** *prefix.xcfgroup*.TOM.OBJ.EVALUATE
Explain Object	Secures access to the Explain object command. **Resource Name:** *prefix.xcfgroup*.TOM.OBJ.EXPLAIN
Lock Object	Secures access to the Lock and Unlock object commands. **Resource Name:** *prefix.xcfgroup*.TOM.OBJ.LOCK
Move Object	Secures access to the Move object command. **Resource Name:** *prefix.xcfgroup*.TOM.OBJ.MOVE
Object Status	Secures access to the object Status command. **Resource Name:** *prefix.xcfgroup*.TOM.OBJ.STATUS
Propagate Object	Secures access to the Propagate object command. **Resource Name:** *prefix.xcfgroup*.TOM.OBJ.PROPAGATE
Reset Object	Secures access to the Reset object command. **Resource Name:** *prefix.xcfgroup*.TOM.OBJ.RESET
Start Object	Secures access to the Start object command. **Resource Name:** *prefix.xcfgroup*.TOM.OBJ.START
Stop Object	Secures access to the Stop object command. **Resource Name:** *prefix.xcfgroup*.TOM.OBJ.STOP
Suspend Object	Secures access to the Suspend object command. **Resource Name:** *prefix.xcfgroup*.TOM.OBJ.SUSPEND
ISPF User Interface - Sets	
Started Task Sets Menu	Secures access to the TOM Started Task Sets menu. **Resource Name:** *prefix.xcfgroup*.TOM.ISPF.SETS

Table 10. MAINVIEW Total Object Manager (TOM) Resources (Continued)

What you can secure	Description
Activate Set	Secures access to the Activate set command. **Resource Name:** *prefix.xcfgroup*.TOM.SET.ACTIVATE
Add Set	Secures access to the Add, Insert, and Repeat set commands. **Resource Name:** *prefix.xcfgroup*.TOM.SET.ADD
Block Set	Secures access to the Block and Unblock set commands. **Resource Name:** *prefix.xcfgroup*.TOM.SET.BLOCK
Bounce Set	Secures access to the Bounce set command. **Resource Name:** *prefix.xcfgroup*.TOM.SET.BOUNCE
Browse Set	Secures access to the Browse set command. **Resource Name:** *prefix.xcfgroup*.TOM.SET.BROWSE
Delete Set	Secures access to the Delete and Delete Block set commands. **Resource Name:** *prefix.xcfgroup*.TOM.SET.DELETE
Edit Set	Secures access to the Edit set command. **Resource Name:** *prefix.xcfgroup*.TOM.SET.EDIT
Lock Set	Secures access to the Lock and Unlock set commands. **Resource Name:** *prefix.xcfgroup*.TOM.SET.LOCK
Move Set	Secures access to the Move set command. **Resource Name:** *prefix.xcfgroup*.TOM.SET.MOVE
Propagate Set	Secures access to the Propagate set command. **Resource Name:** *prefix.xcfgroup*.TOM.SET.PROPAGATE
Reset Set	Secures access to the Reset set command. **Resource Name:** *prefix.xcfgroup*.TOM.SET.RESET
Set Status	Secures access to the set Status command. **Resource Name:** *prefix.xcfgroup*.TOM.SET.STATUS
Start Set	Secures access to the Start set command. **Resource Name:** *prefix.xcfgroup*.TOM.SET.START
Stop Set	Secures access to the Stop set command. **Resource Name:** *prefix.xcfgroup*.TOM.SET.STOP

Table 10. MAINVIEW Total Object Manager (TOM) Resources (Continued)

What you can secure	Description
Suspend Set	Secures access to the Suspend set command. **Resource Name:** *prefix.xcfgroup*.TOM.SET.SUSPEND
Shutdown Set	Secures access to the Shutdown set command. **Resource Name:** *prefix.xcfgroup*.TOM.SET.SHUTDOWN
ISPF User Interface - Status	
Managed Systems Menu	Secures access to the TOM Managed Systems menu. **Resource Name:** *prefix.xcfgroup*.TOM.ISPF.STATUS
Task Overview	Secures access to the Task Overview status command. **Resource Name:** *prefix.xcfgroup*.TOM.STATUS.TASK
Shutdown	Secures access to the Shutdown and Shutdown Lock status commands. **Resource Name:** *prefix.xcfgroup*.TOM.STATUS.SHUTDOWN

Access through an EXCP Terminal

BMC Software products allow the use of terminals that are attached directly to the host system by a channel. EXCP macros are used to communicate with such a terminal. An EXCP-driven terminal is always associated with a user ID.

To allow only specific user IDs to use predefined device addresses, a special resource is introduced in the format:

prefix.ssid.`BBI.TERM`*xxxx*

where

prefix	Is a four-character maximum, user-defined prefix
ssid.	Is the BBI-SS PAS identifier (SSID)
BBI	Is a predefined literal
TERM*xxxx*	Is the literal `TERM` followed by a four-digit device address

For example, the following resource name describes a resource for the subsystem SYSB for the attached terminal device 74C:

```
BAB.SYSB.BBI.TERM.074C
```

Chapter 4. Configuring Your ESM for Basic Security

Once you have decided which resources to secure and created names for all the resources based on the systems and targets for which you will implement security, you can begin the task of identifying the resources to the ESM at your site.

The steps required to identify resources include

1. Defining a security class ($BOOLE) to your ESM to which all resources will belong.
2. Identifying the fully named resources to the security class.
3. Granting or denying access to the resources.

When these steps are completed, go to Chapter 6, "Activating Basic Security" on page 111 for instructions about completing implementation of security and turning it on.

Note: Refer to the IBM publication *RACF Command Language Reference* for further details on the security classes and using the RACF RDEFINE and PERMIT commands.

Defining Security Class $BOOLE

Follow these instructions to define a security class to your ESM for MAINVIEW resources. The default security class is $BOOLE.

In your RACF Router Table:

1. Enter the following TSO command:

   ```
   ICHRFRTB CLASS=$BOOLE,
            ACTION=RACF
   ICHRFRTB TYPE=END
   ```

   where `$BOOLE` is the default security class name.

In your RACF Resource Class Descriptor Table:

2. Enter:

   ```
   ICHERCDE CLASS=$BOOLE,
            ID=   ,
            FIRST=ALPHA,
            MAXLNTH=246,
            OTHER=ANY,
            OPER=NO,
            POSIT=
   ```

3. Enter the following command:

   ```
   SETROPTS CLASSACT($BOOLE)
   ```

   to activate the `$BOOLE` resource class.

4. Enter the following command:

   ```
   SETROPTS GENERIC($BOOLE)
   ```

   to allow `$BOOLE` to use generic profiles.

Once these steps are complete, creating the security class is complete. The next step is to identify all the resources to be secured to this class. This step is described in the next sections. Go to "Defining MAINVIEW Product Resources to Protect" and "Identifying MAINVIEW SYSPROG Services" on page 84 for instructions to identify resources and MAINVIEW SYSPROG Services.

Defining MAINVIEW Product Resources to Protect

How a resource is identified to an ESM (such as RACF) for protection determines whether the resource is initially available to all users. You have the option of deciding which resources will be available to which users by defining resources for protection.

For the RACF ESM, this is done with the universal access (UACC) keyword of the RDEFINE command. The UACC of any resource may be set as either

- UACC(NONE)

  This UACC restricts access to the resource, and users cannot access the resource unless the access is explicitly granted.

- UACC(READ)

  This UACC permits all users access to the resource. If you want to place restrictions on the resource, you must explicitly deny access to specific users.

Therefore, it is important for you to examine the various resources you want to secure and determine if you want a resource to be initially available to all users.

Authorizing Access

The complete syntax for securing MAINVIEW product resources for the ESM of RACF is as follows:

`REDEFINE security_class` (*prefix.ssid*`.proname.target.function) UACC(NONE)`

where

RDEFINE — Is a RACF command entered from a TSO terminal session, ISPF panel, or batch job

security_class — Is the RACF security class for site-defined resources

The default security class name for MAINVIEW product resources is $BOOLE.

prefix.ssid.productname.target.function
Is the fully named resource to secure

UACC(NONE) Secures the resource against all access until you grant users (or groups of users) access to this resource

You may choose to define resources with a universal access (UACC) of READ. The syntax for this is `UACC(READ)`. By using this parameter, the resource is not secured and all users may access this resource until you deny access.

Helpful Hint

If initially you want less restrictions, you can start out with all access granted [UACC(READ)]. Then, as you proceed, you can determine which areas need to be protected or restricted. You can do this either by redefining the resource with a UACC(NONE) and then permitting users access or by denying access on a user by user basis.

If initially you want more restrictions, you can start out with all access denied [UACC(NONE)]. Then, as you proceed, you can determine which users (or groups of users) you will grant access to.

You can also decide to have a mixed level of restrictions, by defining some resources with UACC(NONE) and others with UACC(READ).

Example: Securing MVS Commands for All Users

Suppose you want to secure MVS commands from a MAINVIEW AutoOPERATOR terminal session. In your system, initially you want to limit access to a few people on your production system, which has an SSID of PRD1 and a default security class of $BOOLE. See Chapter 3, "Reviewing Product Resources" on page 13, for more information.

Defining this resource protection to RACF looks like this:

```
RDEFINE $BOOLE BBM.PRD1.BBI.PRD1.MVSCMD UACC(NONE)
```

This definition secures MVS commands on PRD1 from all users. MVS commands cannot be used by any user on PRD1.

To allow some users to issue MVS command authority, follow the instructions in "Granting or Denying Access" on page 85.

Example: Allowing All Users to Send Messages to the BBI-SS PAS Journal

In this example, initially you want to allow all users to have write-access to the BBI-SS PAS Journal. The production system has an SSID of PRD1. The target is PRD1, and you use the default security class of $BOOLE.

Identifying this resource to RACF looks like this:

```
RDEFINE $BOOLE BBM.PRD1.BBI.PRD1.JRNLMSG UACC(READ)
```

This definition allows all users to write messages to the BBI-SS PAS Journal.

To restrict access, follow the instructions in "Granting or Denying Access" on page 85.

Example: Allowing Mixed Accessibility

Some resource names are designed for situations where you may want all users to have read-only access and others to also have update access. For example, in the MAINVIEW AutoOPERATOR product, there are two resource names associated with accessing the Rules Processor:

prefix.ssid`.AAO.target.RULEREAD (read-only access)`
prefix.ssid`.AAO.target.RULEUPD (update access)`

Suppose you have 15 users that need read-only access to the Rules Processor. Identifying this resource to RACF looks like this:

```
RDEFINE $BOOLE BBM.PRD1.AAO.PRD1.RULEREAD UACC(READ)
```

This definition allows all 15 users to have read access to the Rules Processor.

You can also select 3 of these 15 users to have update access. First, you must identify the update resource name to RACF:

```
RDEFINE $BOOLE BBM.PRD1.AAO.PRD1.RULEUPD UACC(NONE)
```

This resource is initially defined with a UACC(NONE), but to allow a subset of users to have access to this resource, you must grant them access explicitly. To do this, follow the instructions in "Granting or Denying Access" on page 85.

Identifying MAINVIEW SYSPROG Services

The syntax for securing MAINVIEW SYSPROG Services for RACF is

`REDEFINE security_class` (*prefix.system*`.productname.request.function)`
`UACC(NONE)`

where

RDEFINE — Is a RACF command entered from a TSO terminal session, ISPF panel, or batch job

security_class — Is the RACF security class to which the resources are defined

The default security class name is $BOOLE.

(*prefix.system*.productname.request.function)
Is the fully named MAINVIEW SYSPROG Services you want to secure

UACC(NONE) — Secures against all access until you grant users (or groups of users) access to this resource

You may choose to define resources with a universal access (UACC) of READ. The syntax for this is `UACC(READ)`. The resource is not secured and all users may access this resource until you deny access.

Securing MAINVIEW SYSPROG Services: This example initially grants access to all MAINVIEW SYSPROG Services:

```
RDEFINE $BOOLE (BBM.SYSA.RESOLVE*) UACC(READ)
```

The following example restricts access to all MAINVIEW SYSPROG Services UPDATE services.

```
RDEFINE $BOOLE (BBM.SYSA.RESOLVE.*.UPDATE) UACC(NONE)
```

Granting or Denying Access

Once the resources are identified to a security class, you can begin granting or denying access to the resources by user ID. You can also create a group user ID that represents a group at your site.

Granting Access

To grant access to a resource, use the RACF PERMIT statement as follows:

`PERMIT resource_name CLASS(security class) ACCESS(READ) ID(`*userid*`)`

where

PERMIT — Is a RACF command issued from a TSO terminal session, ISPF panel, or batch job

resource_name — Is the name of the resource

CLASS(security class) — Is the security class name

ACCESS(READ) — Is a RACF parameter specifying READ access; a value of READ means you are granting access to the resource

ID(*userid*) — Is the user ID of the person (or a group user ID) who is allowed access

Example: To grant update access for MAINVIEW SYSPROG Services to user BCVJXF1, specify the following statement:

```
PERMIT BBM.SYSA.RESOLVE.*.UPDATE CLASS($BOOLE) ACCESS(READ)
ID(BCVJXF1)
```

To authorize user ID BCVJXF1 to use both the list and update services of the MAINVIEW SYSPROG Services APF service, specify the following statement:

```
PERMIT BBM.SYSA.RESOLVE.APF.* ACCESS(READ) ID(BCVJXF1)
```

Denying Access

To deny access to a resource, use the RACF `PERMIT` statement as follows:

`PERMIT resource_name CLASS(security class) ACCESS(NONE) ID(`*userid*`)`

where

PERMIT	Is a RACF command entered from a TSO terminal session, ISPF panel, or batch job
resource_name	Is the name of the resource
CLASS(security class)	Is the security class name
ACCESS(NONE)	Is a RACF parameter specifying NONE; a value of NONE means you are denying access to a resource
ID(*userid*)	Is the user ID of the person (or a group user ID) who is denied access

Example: To deny access to user ID BCVJXF1, specify the following statement:

```
PERMIT BBM.SYSA.RESOLVE.*.UDATE CLASS($BOOLE) ACCESS(NONE) ID(BCVJXF1)
```

Creating Global Security Definitions: Using Generics

You may want to use generics to define a group of resources to your ESM or to grant/deny access to them. You must ensure that the security class you define or create in the ESM supports the use of generics before you can use them in naming resources.

An asterisk (*) can be used to represent a string of characters. A pound sign (#) can be used to represent a single character. All qualifiers in a resource name can be generic except the `prefix` node.

The appropriate use of generics depends on the security class you use. For documentation about RACF security classes, refer to the IBM publication *RACF Command Language Reference*.

Security authorization is granted to every resource that matches the qualified generic name. For example:

```
BBM.SS01.CICS.CICS01.FILE.*
```

grants access to all display file services without having to specify each one.

Listing MAINVIEW Product Resource Names

To see how protecting resources might affect other products, use the matrix on the following pages. For a description of these resources, see Chapter 3, “Reviewing Product Resources” on page 13.

Resource/Service name	MAINVIEW AutoOPERATOR	MAINVIEW for CICS	MAINVIEW for DB2	MAINVIEW for OS/390	MAINVIEW for DBCTL MAINVIEW for IMS Online	MAINVIEW FOCAL POINT	MAINVIEW SYSPROG Services	SYSPROG from AAO	SYSPROG from MVMVS
prefix.*ssid*.BBI.*target*.ACCESS	X	X	X	X	X	X			
prefix.*ssid*.BBI.*target*.BBICMD	X	X	X	X	X	X			
prefix.*ssid*.BBI.*target*.JRNLMSG	X	X	X	X	X	X			
prefix.*ssid*.BBI.*target*.REFRESH	X	X	X		X	X			
prefix.*ssid*.BBI.*target*.PMACC#		X	X	X	X	X			
prefix.*ssid*.BBI.*target*.PMACC*x*		X	X	X	X	X			
prefix.*ssid*.BBI.*target*.TRACE.ALL			X						
prefix.*ssid*.BBI.*target*.TRACE.D		X	X	X	X				
prefix.*ssid*.BBI.*target*.TRACE.S		X	X	X	X				
prefix.*ssid*.BBI.*target*.TRALLOC		X	X	X	X				
prefix.*ssid*.AAO.*target*.ALRT.DE.queuename	X								
prefix.*ssid*.AAO.*target*.ALRT.DEQ.queuename	X								
prefix.*ssid*.AAO.*target*.ALRTREAD	X								
prefix.*ssid*.AAO.*target*.ALRTUPD	X								
prefix.*ssid*.AAO.*target*.APPL.ALS.DETAIL	X								
prefix.*ssid*.AAO.*target*.APPL.ALS.OVERVIEW	X								
prefix.*ssid*.AAO.*target*.APPL.ALS.STATS	X								
prefix.*ssid*.AAO.*target*.APPL.ANV	X								
prefix.*ssid*.AAO.*target*.APPL.AR	X								
prefix.*ssid*.AAO.*target*.APPL.CICS.BRDCST	X								
prefix.*ssid*.AAO.*target*.APPL.CICS.STATUS	X								

Resource/Service name	MAINVIEW AutoOPERATOR	MAINVIEW for CICS	MAINVIEW for DB2	MAINVIEW for OS/390	MAINVIEW for DBCTL MAINVIEW for IMS Online	MAINVIEW FOCAL POINT	MAINVIEW SYSPROG Services	SYSPROG from AAO	SYSPROG from MVMVS
prefix.*ssid*.AAO.*target*.APPL.CSM.ADMADD	X								
prefix.*ssid*.AAO.*target*.APPL.CSM.ADMBRWS	X								
prefix.*ssid*.AAO.*target*.APPL.CSM.ADMBUILD	X								
prefix.*ssid*.AAO.*target*.APPL.CSM.ADMCANCL	X								
prefix.*ssid*.AAO.*target*.APPL.CSM.ADMCLNT	X								
prefix.*ssid*.AAO.*target*.APPL.CSM.ADMCNVT	X								
prefix.*ssid*.AAO.*target*..APPL.CSM.ADMDELT	X								
prefix.*ssid*.AAO.*target*.APPL.CSM.ADMDEPND	X								
prefix.*ssid*.AAO.*target*..APPL.CSM.ADMDGRP	X								
prefix.*ssid*.AAO.*target*..APPL.CSM.ADMEDIT	X								
prefix.*ssid*.AAO.*target*.APPL.CSM.ADMEGRP	X								
prefix.*ssid*.AAO.*target*.APPL.CSM.ADMGRP	X								
prefix.*ssid*.AAO.*target*.APPL.CSM.ADMREPT	X								
prefix.*ssid*.AAO.*target*.APPL.CSM.ADMSAVE	X								
prefix.*ssid*.AAO.*target*.APPL.CSM.ADMXREF	X								
prefix.*ssid*.AAO.*target*.APPL.CSM.OPRBOUNC	X								
prefix.*ssid*.AAO.*target*.APPL.CSM.OPRCALDR	X								
prefix.*ssid*.AAO.*target*.APPL.CSM.OPRCANCL	X								
prefix.*ssid*.AAO.*target*.APPL.CSM.OPREXCPT	X								
prefix.*ssid*.AAO.*target*.APPL.CSM.OPREXEC	X								
prefix.*ssid*.AAO.*target*.APPL.CSM.OPRLIST	X								
prefix.*ssid*.AAO.*target*.APPL.CSM.OPRMOVE	X								
prefix.*ssid*.AAO.*target*.APPL.CSM.OPRRESET	X								
prefix.*ssid*.AAO.*target*.APPL.CSM.OPRSTART	X								
prefix.*ssid*.AAO.*target*.APPL.CSM.OPRSTOP	X								

Resource/Service name	MAINVIEW AutoOPERATOR	MAINVIEW for CICS	MAINVIEW for DB2	MAINVIEW for OS/390	MAINVIEW for DBCTL MAINVIEW for IMS Online	MAINVIEW FOCAL POINT	MAINVIEW SYSPROG Services	SYSPROG from AAO	SYSPROG from MVMVS
prefix.ssid.AAO.*target*.APPL.CSM.OPRSYNC	X								
prefix.ssid.AAO.*target*.APPL.EVTSTATS	X								
prefix.ssid.AAO.*target*.APPL.EXECBRWS	X								
prefix.ssid.AAO.*target*.APPL.EXECMGR	X								
prefix.ssid.AAO.*target*.APPL.EXECTEST	X								
prefix.ssid.AAO.*target*.APPL.EXECVAR	X								
prefix.ssid.AAO.*target*.APPL.IMS.AREA	X								
prefix.ssid.AAO.*target*.APPL.IMS.DATABASE	X								
prefix.ssid.AAO.*target*.APPL.IMS.DEDB	X								
prefix.ssid.AAO.*target*.APPL.IMS.ISC	X								
prefix.ssid.AAO.*target*.APPL.IMS.LINES	X								
prefix.ssid.AAO.*target*.APPL.IMS.LTERMS	X								
prefix.ssid.AAO.*target*.APPL.IMS.MSDB	X								
prefix.ssid.AAO.*target*.APPL.IMS.NODES	X								
prefix.ssid.AAO.*target*.APPL.IMS.PROGRAM	X								
prefix.ssid.AAO.*target*.APPL.IMS.REGION	X								
prefix.ssid.AAO.*target*.APPL.IMS.RTCODE	X								
prefix.ssid.AAO.*target*.APPL.IMS.STATUS	X								
prefix.ssid.AAO.*target*.APPL.IMS.TRAN	X								
prefix.ssid.AAO.*target*.APPL.MQSERIES	X								
prefix.ssid.AAO.*target*.APPL.MVS.ADSPACE	X								
prefix.ssid.AAO.*target*.APPL.MVS.ENQ	X								
prefix.ssid.AAO.*target*.APPL.MVS.DASD	X								
prefix.ssid.AAO.*target*.APPL.MVS.DEVICES	X								
prefix.ssid.AAO.*target*.APPL.MVS.OPER	X								

Resource/Service name	MAINVIEW AutoOPERATOR	MAINVIEW for CICS	MAINVIEW for DB2	MAINVIEW for OS/390	MAINVIEW for DBCTL MAINVIEW for IMS Online	MAINVIEW FOCAL POINT	MAINVIEW SYSPROG Services	SYSPROG from AAO	SYSPROG from MVMVS
prefix.*ssid*.AAO.*target*.APPL.MVS.STATUS	X								
prefix.*ssid*.AAO.*target*.APPL.MVS.TAPE	X								
prefix.*ssid*.AAO.*target*.APPL.OSPI	X								
prefix.*ssid*.AAO.*target*.APPL.RULES	X								
prefix.*ssid*.AAO.*target*.APPL.SOF	X								
prefix.*ssid*.AAO.*target*.APPL.TAPSHR	X								
prefix.*ssid*.AAO.*target*.APPL.TAPSREAD	X								
prefix.*ssid*.AAO.*target*.APPL.TAPSUPD	X								
prefix.*ssid*.AAO.*target*.APPL.TI	X								
prefix.*ssid*.AAO.*target*.APPL.VTAM.APPLS	X								
prefix.*ssid*.AAO.*target*.APPL.VTAM.CDRMS	X								
prefix.*ssid*.AAO.*target*.APPL.VTAM.CDRSCS	X								
prefix.*ssid*.AAO.*target*.APPL.VTAM.CLSTRS	X								
prefix.*ssid*.AAO.*target*.APPL.VTAM.LINES	X								
prefix.*ssid*.AAO.*target*.APPL.VTAM.MAJNODE	X								
prefix.*ssid*.AAO.*target*.APPL.VTAM.TERMS	X								
prefix.*ssid*.AAO.*target*.CICSTRAN	X								
prefix.*ssid*.AAO.*target*.CICSTRAN.cmd	X								
prefix.*ssid*.AAO.*target*.EXEC	X								
prefix.*ssid*.AAO.*target*.EXEC.execname	X								
prefix.*ssid*.AAO.*target*.IMSCMD	X								
prefix.*ssid*.AAO.*target*.IMSCMD.cmd.parm.parm	X								
prefix.*ssid*.AAO.*target*.IMSMSG	X								
prefix.*ssid*.AAO.*target*.IMSTRAN	X								
prefix.*ssid*.AAO.*target*.IMSTRAN.command	X								

Resource/Service name	MAINVIEW AutoOPERATOR	MAINVIEW for CICS	MAINVIEW for DB2	MAINVIEW for OS/390	MAINVIEW for DBCTL MAINVIEW for IMS Online	MAINVIEW FOCAL POINT	MAINVIEW SYSPROG Services	SYSPROG from AAO	SYSPROG from MVMVS
prefix.*ssid*.AAO.*target*.MSG	X								
prefix.*ssid*.AAO.*target*.MVSCMD	X								
prefix.*ssid*.AAO.*target*.MVSCMD.cmd.parameter	X								
prefix.*ssid*.AAO.*target*..NOTIFY	X								
prefix.*ssid*.AAO.*target*.PARMREAD	X								
prefix.*ssid*.AAO.*target*.PARMREAD.membername	X								
prefix.*ssid*.AAO.*target*.PARMUPD	X								
prefix.*ssid*.AAO.*target*.PARMUPD.membername	X								
prefix.*ssid*.AAO.*target*.RESAUTH	X								
prefix.*ssid*.AAO.*target*.RULEREAD	X								
prefix.*ssid*.AAO.*target*.RULEUPD	X								
prefix.*ssid*.AAO.*target*.VARREAD	X								
prefix.*ssid*.AAO.*target*.VARUPD	X								
prefix.*ssid*.CICS.*target*.ABEND.ABEND		X							
prefix.*ssid*.CICS.*target*.AID.AID		X							
prefix.*ssid*.CICS.*target*.ALTAID.PURGEAID		X							
prefix.*ssid*.CICS.*target*.ALTCLAS.ALTAMXT	X	X							
prefix.*ssid*.CICS.*target*.ALTCLAS.ALTCM001	X	X							
prefix.*ssid*.CICS.*target*.ALTCLAS.ALTCM002	X	X							
prefix.*ssid*.CICS.*target*.ALTCLAS.ALTCM003	X	X							
prefix.*ssid*.CICS.*target*.ALTCLAS.ALTCM004	X	X							
prefix.*ssid*.CICS.*target*.ALTCLAS.ALTCM005	X	X							
prefix.*ssid*.CICS.*target*.ALTCLAS.ALTCM006	X	X							
prefix.*ssid*.CICS.*target*.ALTCLAS.ALTCM007	X	X							
prefix.*ssid*.CICS.*target*.ALTCLAS.ALTCM008	X	X							

Resource/Service name	MAINVIEW AutoOPERATOR	MAINVIEW for CICS	MAINVIEW for DB2	MAINVIEW for OS/390	MAINVIEW for DBCTL MAINVIEW for IMS Online	MAINVIEW FOCAL POINT	MAINVIEW SYSPROG Services	SYSPROG from AAO	SYSPROG from MVMVS
prefix.*ssid*.CICS.*target*.ALTCLAS.ALTCM009	X	X							
prefix.*ssid*.CICS.*target*.ALTCLAS.ALTCM010	X	X							
prefix.*ssid*.CICS.*target*.ALTCLAS.ALTICV	X	X							
prefix.*ssid*.CICS.*target*.ALTCLAS.ALTMAXT	X	X							
prefix.*ssid*.CICS.*target*.ALTCONN.ACQCONN		X							
prefix.*ssid*.CICS.*target*.ALTCONN.AVAMODE		X							
prefix.*ssid*.CICS.*target*.ALTCONN.INSCONN		X							
prefix.*ssid*.CICS.*target*.ALTCONN.NOTCONN		X							
prefix.*ssid*.CICS.*target*.ALTCONN.OUTCONN		X							
prefix.*ssid*.CICS.*target*.ALTCONN.PURCONN		X							
prefix.*ssid*.CICS.*target*.ALTCONN.RELCONN		X							
prefix.*ssid*.CICS.*target*.ALTDEST.DISDEST	X	X							
prefix.*ssid*.CICS.*target*.ALTDEST.ENADEST	X	X							
prefix.*ssid*.CICS.*target*.ALTDEST.PURGETD	X	X							
prefix.*ssid*.CICS.*target*.ALTDEST.RECDLID	X	X							
prefix.*ssid*.CICS.*target*.ALTER.ALTERVS	X	X							
prefix.*ssid*.CICS.*target*.ALTFILE.ALLOC	X								
prefix.*ssid*.CICS.*target*.ALTFILE.CLOSE	X	X							
prefix.*ssid*.CICS.*target*.ALTFILE.DISFILE	X	X							
prefix.*ssid*.CICS.*target*.ALTFILE.DUMDLID		X							
prefix.*ssid*.CICS.*target*.ALTFILE.ENAFILE	X	X							
prefix.*ssid*.CICS.*target*.ALTFILE.FREE	X	X							
prefix.*ssid*.CICS.*target*.ALTFILE.OPEN	X	X							
prefix.*ssid*.CICS.*target*.ALTFILE.STADLID	X	X							
prefix.*ssid*.CICS.*target*.ALTFILE.STODLID	X	X							

Resource/Service name	MAINVIEW AutoOPERATOR	MAINVIEW for CICS	MAINVIEW for DB2	MAINVIEW for OS/390	MAINVIEW for DBCTL MAINVIEW for IMS Online	MAINVIEW FOCAL POINT	MAINVIEW SYSPROG Services	SYSPROG from AAO	SYSPROG from MVMVS
prefix.ssid.CICS.*target*.ALTICES.PURGEICE	X	X							
prefix.ssid.CICS.*target*.ALTPROG.CICPROG		X							
prefix.ssid.CICS.*target*.ALTPROG.DISPROG	X	X							
prefix.ssid.CICS.*target*.ALTPROG.ENAPROG	X	X							
prefix.ssid.CICS.*target*.ALTPROG.NEWCOPY	X	X							
prefix.ssid.CICS.*target*.ALTPROG.PGMDROP	X	X							
prefix.ssid.CICS.*target*.ALTPROG.PGMLOAD	X	X							
prefix.ssid.CICS.*target*.ALTPROG.USEPROG		X							
prefix.ssid.CICS.*target*.ALTTASK.KILCEMT	X	X							
prefix.ssid.CICS.*target*.ALTTASK.KILL	X	X							
prefix.ssid.CICS.*target*.ALTTERM.ACQTERM	X	X							
prefix.ssid.CICS.*target*.ALTTERM.INSCONT		X							
prefix.ssid.CICS.*target*.ALTTERM.INSLINE		X							
prefix.ssid.CICS.*target*.ALTTERM.INSTERM	X	X							
prefix.ssid.CICS.*target*.ALTTERM.OUTCONT		X							
prefix.ssid.CICS.*target*.ALTTERM.OUTLINE		X							
prefix.ssid.CICS.*target*.ALTTERM.OUTTERM	X	X							
prefix.ssid.CICS.*target*.ALTTERM.RELTERM	X	X							
prefix.ssid.CICS.*target*.ALTTRAN.CICTRAN		X							
prefix.ssid.CICS.*target*.ALTTRAN.DISTRAN	X	X							
prefix.ssid.CICS.*target*.ALTTRAN.ENATRAN	X	X							
prefix.ssid.CICS.*target*.ALTTRAN.ISOTRAN		X							
prefix.ssid.CICS.*target*.ALTTRAN.NOITRAN		X							
prefix.ssid.CICS.*target*.ALTTRAN.NONTRAN	X	X							
prefix.ssid.CICS.*target*.ALTTRAN.PURTRAN	X	X							

Resource/Service name	MAINVIEW AutoOPERATOR	MAINVIEW for CICS	MAINVIEW for DB2	MAINVIEW for OS/390	MAINVIEW for DBCTL MAINVIEW for IMS Online	MAINVIEW FOCAL POINT	MAINVIEW SYSPROG Services	SYSPROG from AAO	SYSPROG from MVMVS
prefix.*ssid*.CICS.*target*.ALTTRAN.USETRAN		X							
prefix.*ssid*.CICS.*target*.ALTTSUT.PURGETS		X							
prefix.*ssid*.CICS.*target*.CLASS.CLASSES		X							
prefix.*ssid*.CICS.*target*.CONNECT.CONNECT		X							
prefix.*ssid*.CICS.*target*.CONNECT.CONNXPND		X							
prefix.*ssid*.CICS.*target*.CONNECT.CONNXPN2		X							
prefix.*ssid*.CICS.*target*.CONNECT.SESSIONS		X							
prefix.*ssid*.CICS.*target*.DB2SYSP.DB2SYSP		X							
prefix.*ssid*.CICS.*target*.DB2SYSP.DBCTL		X							
prefix.*ssid*.CICS.*target*.DB2SYSP.MQSERIES		X							
prefix.*ssid*.CICS.*target*.DB2TASK.DB2TASK		X							
prefix.*ssid*.CICS.*target*.DB2TASK.DB2TXPND		X							
prefix.*ssid*.CICS.*target*.DB2TASK.DBCTASK		X							
prefix.*ssid*.CICS.*target*.DB2TASK.MQTASK		X							
prefix.*ssid*.CICS.*target*.DEST.DEST		X							
prefix.*ssid*.CICS.*target*.DIAG.CONFIG		X							
prefix.*ssid*.CICS.*target*.DIAG.GRAFSTAT		X							
prefix.*ssid*.CICS.*target*.DIAG.PROGSS		X							
prefix.*ssid*.CICS.*target*.DIAG.QSTAT		X							
prefix.*ssid*.CICS.*target*.DIAG.VALIDATE		X							
prefix.*ssid*.CICS.*target*.DLI.DLI		X							
prefix.*ssid*.CICS.*target*.DUMP.DUMP		X							
prefix.*ssid*.CICS.*target*.ENQUEUE.ENQUEUE		X							
prefix.*ssid*.CICS.*target*.EXITS.EXITS		X							
prefix.*ssid*.CICS.*target*.FILE.DATATABL		X							

Resource/Service name	MAINVIEW AutoOPERATOR	MAINVIEW for CICS	MAINVIEW for DB2	MAINVIEW for OS/390	MAINVIEW for DBCTL MAINVIEW for IMS Online	MAINVIEW FOCAL POINT	MAINVIEW SYSPROG Services	SYSPROG from AAO	SYSPROG from MVMVS
prefix.ssid.CICS.*target*.FILE.DDIR		X							
prefix.ssid.CICS.*target*.FILE.DDIRXPND		X							
prefix.ssid.CICS.*target*.FILE.DDIRXPN2		X							
prefix.ssid.CICS.*target*.FILE.DSNAMES		X							
prefix.ssid.CICS.*target*.FILE.FILE		X							
prefix.ssid.CICS.*target*.FILE.FILEXPND		X							
prefix.ssid.CICS.*target*.FILE.FILEXPN2		X							
prefix.ssid.CICS.*target*.HISTORY.HISTORY		X							
prefix.ssid.CICS.*target*.ICE.ICE		X							
prefix.ssid.CICS.*target*.JOURNAL.JOURNAL		X							
prefix.ssid.CICS.*target*.MONITOR.MONITOR		X							
prefix.ssid.CICS.*target*.NUCLEUS.LPAS		X							
prefix.ssid.CICS.*target*.NUCLEUS.NUCLEUS		X							
prefix.ssid.CICS.*target*.NUCLEUS.TCBS		X							
prefix.ssid.CICS.*target*.PLAN.PLAN		X							
prefix.ssid.CICS.*target*.PLAN.PLANXPND		X							
prefix.ssid.CICS.*target*.PPST.PPST		X							
prefix.ssid.CICS.*target*.PROBLEM.CSTATUS		X							
prefix.ssid.CICS.*target*.PROBLEM.PROBLEM		X							
prefix.ssid.CICS.*target*.PROBLEM.STATUS		X							
prefix.ssid.CICS.*target*.PROGRAM.PROGRAM		X							
prefix.ssid.CICS.*target*.PROGRAM.REMOTES		X							
prefix.ssid.CICS.*target*.PSB.PSBNAME		X							
prefix.ssid.CICS.*target*.REVIEW.REVIEW		X							
prefix.ssid.CICS.*target*.SETDMPCD.DAEOPT		X							

Resource/Service name	MAINVIEW AutoOPERATOR	MAINVIEW for CICS	MAINVIEW for DB2	MAINVIEW for OS/390	MAINVIEW for DBCTL MAINVIEW for IMS Online	MAINVIEW FOCAL POINT	MAINVIEW SYSPROG Services	SYSPROG from AAO	SYSPROG from MVMVS
prefix.*ssid*.CICS.*target*.SETDMPCD.DMPSCPE		X							
prefix.*ssid*.CICS.*target*.SETDMPCD.MAXDUMP		X							
prefix.*ssid*.CICS.*target*.SETDMPCD.RESET		X							
prefix.*ssid*.CICS.*target*.SETDMPCD.SHDNOPT		X							
prefix.*ssid*.CICS.*target*.SETDMPCD.SDMPOPT		X							
prefix.*ssid*.CICS.*target*.SETDMPCD.TDMPOPT		X							
prefix.*ssid*.CICS.*target*.SETDMPD.DATASET	X	X							
prefix.*ssid*.CICS.*target*.SETDMPD.INIT	X	X							
prefix.*ssid*.CICS.*target*.SETDMPD.STATUS	X	X							
prefix.*ssid*.CICS.*target*.SETDMPD.SWITCH	X	X							
prefix.*ssid*.CICS.*target*.SETSYS.APK	X	X							
prefix.*ssid*.CICS.*target*.SETSYS.DSALIM	X	X							
prefix.*ssid*.CICS.*target*.SETSYS.DTRPROG	X	X							
prefix.*ssid*.CICS.*target*.SETSYS.DUMPING	X	X							
prefix.*ssid*.CICS.*target*.SETSYS.EDSALIM	X	X							
prefix.*ssid*.CICS.*target*.SETSYS.FORCEQR	X	X							
prefix.*ssid*.CICS.*target*.SETSYS.MAXTASK	X	X							
prefix.*ssid*.CICS.*target*.SETSYS.PGACTLG	X	X							
prefix.*ssid*.CICS.*target*.SETSYS.PGAEXIT	X	X							
prefix.*ssid*.CICS.*target*.SETSYS.PGASTAT	X	X							
prefix.*ssid*.CICS.*target*.SETSYS.PRTYAGE	X	X							
prefix.*ssid*.CICS.*target*.SETSYS.RUNAWAY	X	X							
prefix.*ssid*.CICS.*target*.SETSYS.SCANDEL	X	X							
prefix.*ssid*.CICS.*target*.SETSYS.TIME	X	X							
prefix.*ssid*.CICS.*target*.SETTCLA.MAXACT	X	X							

Resource/Service name	MAINVIEW AutoOPERATOR	MAINVIEW for CICS	MAINVIEW for DB2	MAINVIEW for OS/390	MAINVIEW for DBCTL MAINVIEW for IMS Online	MAINVIEW FOCAL POINT	MAINVIEW SYSPROG Services	SYSPROG from AAO	SYSPROG from MVMVS
prefix.ssid.CICS.*target*.SETTCLA.PURTHSH	X	X							
prefix.ssid.CICS.*target*.SETTCPS.BACKLOG	X	X							
prefix.ssid.CICS.*target*.SETTCPS.DNSSTAT	X	X							
prefix.ssid.CICS.*target*.SETTCPS.OPENST	X	X							
prefix.ssid.CICS.*target*.SETTCPS.URM	X	X							
prefix.ssid.CICS.*target*.SHARE.SHARE		X							
prefix.ssid.CICS.*target*.SUBPOOL.DSAS		X							
prefix.ssid.CICS.*target*.SUBPOOL.REGIONS		X							
prefix.ssid.CICS.*target*.SUBPOOL.SCAS		X							
prefix.ssid.CICS.*target*.SUBPOOL.SUBPOOL		X							
prefix.ssid.CICS.*target*.SUFFIX.SUFF		X							
prefix.ssid.CICS.*target*.SUMMARY.SUMMARY		X							
prefix.ssid.CICS.*target*.TASK.MEMORY		X							
prefix.ssid.CICS.*target*.TASK.TASK		X							
prefix.ssid.CICS.*target*.TASK.TASKXPN2		X							
prefix.ssid.CICS.*target*.TASK.TASKXPN3		X							
prefix.ssid.CICS.*target*.TASK.TASKXPN4		X							
prefix.ssid.CICS.*target*.TASK.TASKXPND		X							
prefix.ssid.CICS.*target*.TEMP.TEMPSTRG		X							
prefix.ssid.CICS.*target*.TEMP.TEMPXPND		X							
prefix.ssid.CICS.*target*.TERM.CONSOLES		X							
prefix.ssid.CICS.*target*.TERM.TERMINAL		X							
prefix.ssid.CICS.*target*.TERM.TERMXPND		X							
prefix.ssid.CICS.*target*.TIOT.TIOT		X							
prefix.ssid.CICS.*target*.TIOT.VOLUMES		X							

Resource/Service name	MAINVIEW AutoOPERATOR	MAINVIEW for CICS	MAINVIEW for DB2	MAINVIEW for OS/390	MAINVIEW for DBCTL MAINVIEW for IMS Online	MAINVIEW FOCAL POINT	MAINVIEW SYSPROG Services	SYSPROG from AAO	SYSPROG from MVMVS
prefix.*ssid*.CICS.*target*.TRAN.TCLASS		X							
prefix.*ssid*.CICS.*target*.TRAN.TCLAXPND		X							
prefix.*ssid*.CICS.*target*.TRAN.TRAN		X							
prefix.*ssid*.CICS.*target*.TRAN.TRANXPND		X							
prefix.*ssid*.CICS.*target*.TSUT.TSUT		X							
prefix.*ssid*.CICS.*target*.VTAM.VTAM		X							
prefix.*ssid*.DMR.*target*.DB2CMD			X						
prefix.*ssid*.DMR.*target*.DB2TRACE.GENERIC			X						
prefix.*ssid*.DMR.*target*.DB2SQLAU			X						
prefix.*ssid*.DMR.*target*.DB2SQLAL			X						
prefix.*system*.RESOLVE.ALLOCATE.UPDATE							X		X
prefix.*system*.RESOLVE.APF.EXIT							X		X
prefix.*system*.RESOLVE.APF.LIST							X		X
prefix.*system*.RESOLVE.APF.UPDATE							X		X
prefix.*system*.RESOLVE.ASM.LIST							X	X	X
prefix.*system*.RESOLVE.AUTHTSO.EXIT							X		X
prefix.*system*.RESOLVE.AUTHTSO.LIST							X		X
prefix.*system*.RESOLVE.AUTHTSO.UPDATE							X		X
prefix.*system*.RESOLVE.BBXS.LIST							X		X
prefix.*system*.RESOLVE.CBLOCK.LIST							X		X
prefix.*system*.RESOLVE.CDE.LIST							X		X
prefix.*system*.RESOLVE.CHAP.UPDATE							X		X
prefix.*system*.RESOLVE.CLEAR.UPDATE							X		X
prefix.*system*.RESOLVE.CNSL.UPDATE							X		
prefix.*system*.RESOLVE.COMMAND.UPDATE							X		

Resource/Service name	MAINVIEW AutoOPERATOR	MAINVIEW for CICS	MAINVIEW for DB2	MAINVIEW for OS/390	MAINVIEW for DBCTL MAINVIEW for IMS Online	MAINVIEW FOCAL POINT	MAINVIEW SYSPROG Services	SYSPROG from AAO	SYSPROG from MVMVS
prefix.system.RESOLVE.CONSOLES.LIST							X		X
prefix.system.RESOLVE.CONSOLES.UPDATE							X		X
prefix.system.RESOLVE.CPU.LIST							X	X	X
prefix.system.RESOLVE.CSA.LIST							X	X	X
prefix.system.RESOLVE.CSMON.LIST							X		X
prefix.system.RESOLVE.CSMON.EXIT							X		X
prefix.system.RESOLVE.CSSUM.LIST							X		X
prefix.system.RESOLVE.DCPU.LIST							X		X
prefix.system.RESOLVE.DEALLOC.UPDATE							X		X
prefix.system.RESOLVE.DEBUG.UPDATE							X		
prefix.system.RESOLVE.DEVIATN.LIST							X		X
prefix.system.RESOLVE.DOMAIN.LIST							X		X
prefix.system.RESOLVE.DONTSWAP.UPDATE							X		X
prefix.system.RESOLVE.DSNAME.LIST							X		X
prefix.system.RESOLVE.DUMP/LIST.LIST							X		X
prefix.system.RESOLVE.DVIEW.LIST							X		X
prefix.system.RESOLVE.DVIEW.UPDATE							X		X
prefix.system.RESOLVE.EDTINFO.LIST							X		X
prefix.system.RESOLVE.ENQUEUES.LIST							X	X	X
prefix.system.RESOLVE.EQUATE.LIST							X		X
prefix.system.RESOLVE.ESTORAGE.LIST							X		X
prefix.system.RESOLVE.EXECUTE.UPDATE							X		X
prefix.system.RESOLVE.EXIT.UPDATE							X		X
prefix.system.RESOLVE.FCOMMON.UPDATE							X		
prefix.system.RESOLVE.FINDMBR.LIST							X		X

Resource/Service name	MAINVIEW AutoOPERATOR	MAINVIEW for CICS	MAINVIEW for DB2	MAINVIEW for OS/390	MAINVIEW for DBCTL MAINVIEW for IMS Online	MAINVIEW FOCAL POINT	MAINVIEW SYSPROG Services	SYSPROG from AAO	SYSPROG from MVMVS
prefix.system.RESOLVE.HELP.LIST							X		
prefix.system.RESOLVE.INFO.LIST							X	X	X
prefix.system.RESOLVE.IO.LIST							X	X	X
prefix.system.RESOLVE.LABEL.LIST							X		X
prefix.system.RESOLVE.LLIST.LIST							X		X
prefix.system.RESOLVE.LLIST.UPDATE							X		X
prefix.system.RESOLVE.LLIST.EXIT							X		X
prefix.system.RESOLVE.LOADLPA.UPDATE							X		X
prefix.system.RESOLVE.LOADLPA.EXIT							X		X
prefix.system.RESOLVE.LOCKS.LIST							X		X
prefix.system.RESOLVE.LOG.LIST							X		
prefix.system.RESOLVE.LPA.LIST							X		X
prefix.system.RESOLVE.LWAIT.EXIT							X		X
prefix.system.RESOLVE.MCOMMAND.UPDATE							X		X
prefix.system.RESOLVE.MDEVICE.LIST							X	X	X
prefix.system.RESOLVE.MEMSCAN.LIST							X		X
prefix.system.RESOLVE.MIO.LIST							X		X
prefix.system.RESOLVE.MLCU.LIST							X		X
prefix.system.RESOLVE.MONITOR.LIST							X	X	X
prefix.system.RESOLVE.MOUNT.UPDATE							X		X
prefix.system.RESOLVE.MPATH.LIST							X	X	X
prefix.system.RESOLVE.MSTORAGE.LIST							X		X
prefix.system.RESOLVE.MTP.LIST							X	X	X
prefix.system.RESOLVE.NUCLEUS.LIST							X		X
prefix.system.RESOLVE.OKSWAP.UPDATE							X		X

Resource/Service name	MAINVIEW AutoOPERATOR	MAINVIEW for CICS	MAINVIEW for DB2	MAINVIEW for OS/390	MAINVIEW for DBCTL MAINVIEW for IMS Online	MAINVIEW FOCAL POINT	MAINVIEW SYSPROG Services	SYSPROG from AAO	SYSPROG from MVMVS
prefix.system.RESOLVE.PAGING.LIST							X	X	X
prefix.system.RESOLVE.PARMLIST.LIST							X		X
prefix.system.RESOLVE.PCPU.LIST							X		X
prefix.system.RESOLVE.PFKEY.LIST							X		
prefix.system.RESOLVE.PIO.LIST							X		X
prefix.system.RESOLVE.PRIVATE.LIST							X		X
prefix.system.RESOLVE.PROGRESS.LIST							X	X	X
prefix.system.RESOLVE.PRSRM.LIST							X		X
prefix.system.RESOLVE.REALLOC.UPDATE							X		
prefix.system.RESOLVE.REALTIME.UPDATE							X		
prefix.system.RESOLVE.REALTIME.LIST							X		
prefix.system.RESOLVE.REPLIES.LIST							X	X	X
prefix.system.RESOLVE.RESERVES.LIST							X	X	X
prefix.system.RESOLVE.RSM.LIST							X	X	X
prefix.system.RESOLVE.SDUMP.LIST							X		X
prefix.system.RESOLVE.SDUMP.UPDATE							X		X
prefix.system.RESOLVE.SETOP.LIST							X		X
prefix.system.RESOLVE.SMFEXIT.UPDATE							X		X
prefix.system.RESOLVE.SMFEXIT.EXIT							X		X
prefix.system.RESOLVE.SMSLIST.LIST							X		X
prefix.system.RESOLVE.SMSLIST.UPDATE							X		X
prefix.system.RESOLVE.SOFTFRR.LIST							X	X	X
prefix.system.RESOLVE.SPACE.LIST							X	X	X
prefix.system.RESOLVE.SRM.LIST							X		X
prefix.system.RESOLVE.SSVT.LIST							X		X

Resource/Service name	MAINVIEW AutoOPERATOR	MAINVIEW for CICS	MAINVIEW for DB2	MAINVIEW for OS/390	MAINVIEW for DBCTL MAINVIEW for IMS Online	MAINVIEW FOCAL POINT	MAINVIEW SYSPROG Services	SYSPROG from AAO	SYSPROG from MVMVS
prefix.system.RESOLVE.SSVT.EXIT							X		X
prefix.system.RESOLVE.STATUS.LIST							X	X	X
prefix.system.RESOLVE.SUBMIT.UPDATE							X		
prefix.system.RESOLVE.SVCFIND.LIST							X		X
prefix.system.RESOLVE.SYSDUMP.LIST							X	X	X
prefix.system.RESOLVE.TCB.LIST							X		X
prefix.system.RESOLVE.TERM.LIST							X		X
prefix.system.RESOLVE.TIME.LIST							X		X
prefix.system.RESOLVE.TIOT.LIST							X	X	X
prefix.system.RESOLVE.TPIO.LIST							X	X	X
prefix.system.RESOLVE.TQE.LIST							X		X
prefix.system.RESOLVE.TRACK.LIST							X		
prefix.system.RESOLVE.TRTBL.LIST							X		X
prefix.system.RESOLVE.TSULIST.LIST							X	X	X
prefix.system.RESOLVE.UCB.LIST							X		X
prefix.system.RESOLVE.UNLOAD.UPDATE							X		X
prefix.system.RESOLVE.USING.LIST							X	X	X
prefix.system.RESOLVE.VIO.LIST							X		X
prefix.system.RESOLVE.VMCMD.UPDATE							X	X	X
prefix.system.RESOLVE.WAITING.LIST							X		X
prefix.system.RESOLVE.WARNING.LIST							X		X
prefix.system.RESOLVE.XCALL.UPDATE							X		
prefix.system.RESOLVE.XLOAD.LIST							X		
prefix.system.RESOLVE.XSERVICE.LIST							X		
prefix.system.RESOLVE.ZAP.UPDATE							X		X

Chapter 5. Using CLISTs to Identify Resources

BMC Software distributes several CLISTs that you can use to help identify the resources to be secured with an ESM. These CLISTs are members of the BBSAMP data set.

CLIST name	Description
RACFDEF	Defines all the product resources (listed in Table 1 on page 17) to RACF.
MIGUSER	Assists in migrating any standard BBSAMP $USERID members you might have defined with BMC Software proprietary security into RACF definitions.

AOANYDF, AOANYPE
Use these CLISTs to implement security for the AOAnywhere facility of the MAINVIEW AutoOPERATOR product. AOAnywhere commands are listed in Table 1 on page 17.

AOCMDDF, AOCMDPE
Use these CLISTs to implement additional security with the CMD feature for the MAINVIEW AutoOPERATOR product. MAINVIEW AutoOPERATOR CMD-level resources are listed in "Resources for MAINVIEW AutoOPERATOR Commands and Transactions: (FEATURE=CMD)" on page 56.

AOAPPLDF, AOAAPLPE
Use these CLISTs to implement additional security with the APPL feature for the MAINVIEW AutoOPERATOR product. MAINVIEW AutoOPERATOR APPL-level resources are listed in "Resources for MAINVIEW AutoOPERATOR Applications: (FEATURE=APPL)" on page 50.

AOALRTDF, AOALRTPE
Use these CLISTs to implement additional security with the ALRT feature for the MAINVIEW AutoOPERATOR product. MAINVIEW AutoOPERATOR ALRT-level resources are listed in "Resources for MAINVIEW AutoOPERATOR ALERTs: (FEATURE=ALRT)" on page 59.

AOEXECDF, AOEXECPE
Use these CLISTs to implement additional security with the EXEC feature for the MAINVIEW AutoOPERATOR product. MAINVIEW AutoOPERATOR EXEC-level resources are listed in "Resources for MAINVIEW AutoOPERATOR EXECs: (FEATURE=EXEC)" on page 59.

AOPARMDF, AOPARMPE
Use these CLISTs to implement additional security with the PARM feature for the MAINVIEW AutoOPERATOR product. MAINVIEW AutoOPERATOR PARM-level resources are listed in "Resources for MAINVIEW AutoOPERATOR Parameter Data: (FEATURE=PARM)" on page 60.

CICSRACF Use this CLIST to define all CICS resources to RACF.

DB2CMDDF, DB2CMDPE
Use these CLISTs to implement additional security with the CMD feature for the MAINVIEW for DB2 product. CMD-level resources are listed in "Resources for MAINVIEW for DB2" on page 69.

Creating Resource Names for MAINVIEW Products

Use the RACFDEF CLIST to identify the resources listed in Table 1 on page 17 to RACF.

The RACFDEF CLIST prompts you to enter the

- prefix to use as the high-level qualifier for each resource
- security class to use ($BOOLE)
- SSID of the BBI-SS PAS you are securing
- default access rights for all resources: UACC(READ) or UACC(NONE)
- target you are securing (targets must be existing targets in the BBPARM member BBIJNT00)

Run this CLIST once for every BBI-SS PAS and for every target you are securing.

Migrating Existing Resource Names for MAINVIEW Products

Use the MIGUSER CLIST to migrate any security you may have defined in BBPARM member $USERID with BMC Software proprietary security. The definitions in $USERID must be syntactically correct for this CLIST to run successfully.

The $USERID member should not include any generic AUTHJOB definitions unless the security class defined has been implemented as a generic class. The value specified in the AUTHJOB keyword is equivalent to the *target* node of the resource name.

The MIGUSER CLIST prompts you to enter a

- SSID of the BBI-SS PAS you are securing
- prefix to use as the high-level qualifier for each resource
- security class to use ($BOOLE)
- user ID to migrate
- name of the BBPARM data set member that you are trying to convert (do not specify quotation marks in the data set name)

Creating Resource Names for MAINVIEW AutoOPERATOR

MAINVIEW AutoOPERATOR product security can be implemented with up to five additional features, as described in "Resources for MAINVIEW AutoOPERATOR: Advanced Security" on page 48. If you plan to implement security for any of these features, you must complete the instructions in Chapter 6, "Activating Basic Security".

Use the CLISTs described in Table 11 to help identify the resources associated with each additional feature. Each CLIST prompts you to enter the

- security class to use ($BOOLE)
- prefix to use as the high-level qualifier for each resource
- SSID of the BBI-SS PAS you are securing
- default access rights for all resources: UACC(READ) or UACC(NONE)
- target you are securing (targets must be existing targets in the BBPARM member BBIJNT00)

If you choose to modify any CLIST, make a copy of it first.

Run each CLIST once for every BBI-SS PAS and for every target you are securing.

Table 11. MAINVIEW AutoOPERATOR Security CLISTs

Feature	Secures	CLIST	Function
FEATURE=CMD	CICS transactions, IMS transactions, IMS commands, and MVS commands from a MAINVIEW AutoOPERATOR terminal session. See page 56 for a list of CMD-level resource names.	AOCMDDF	Identifies the resources to be secured to RACF.
		AOCMDPE	Helps you permit access to the secured resources.
FEATURE=APPL	Access to MAINVIEW AutoOPERATOR applications in a BBSEC member. See page 50 for a list of APPL-level resources and names.	AOAPPLDF	Identifies the resources to be secured to RACF.
		AOAPPLPE	Helps you permit access to the secured resources.
FEATURE=ALRT	ALERTs and ALERT queues from deletion in the MAINVIEW AutoOPERATOR ALERT Display and ALERT Detail applications. See page 59 for a list of ALRT-level resources and names.	AOALRTDF	Identifies the resources to be secured to RACF.
		AOALRTPE	Helps you permit access to the secured resources.
FEATURE=EXEC	Individual EXECs from scheduling by EXEC name. See page 59 for a list of EXEC-level resources and names.	AOEXECDF	Identifies the resources to be secured to RACF.
		AOEXECPE	Helps you permit access to the secured resources.
FEATURE=PARM	Parameter members from being updated, read, added, deleted, or activated in the MAINVIEW AutoOPERATOR Dynamic Parameter Manager application. See page 60 for a list of PARM-level resources and names.	AOPARMDF	Identifies the resources to be secured to RACF.
		AOPARMPE	Helps you permit access to the secured resources.

Creating Resource Names for CICS Resources

Use this CLIST to implement additional security for the MAINVIEW AutoOPERATOR for CICS option. By choosing the CICS feature, you are securing the use of CICS action, display, and diagnostic services.

The CICSRACF CLIST identifies the CICS resources to be secured to RACF and prompts you to enter the

- prefix to use as the high-level qualifier for each resource
- security class to use ($BOOLE)
- SSID of the BBI-SS PAS you are securing
- default access rights for all resources: UACC(READ) or UACC(NONE)
- type, which determines which security definitions are generated
- delete option, which determines whether to add or delete definitions generated
- target you are securing (targets must be existing targets in the BBPARM member BBIJNT00)

Run this CLIST once for every BBI-SS PAS and for every target you are securing.

Important

If you plan to implement security for CICS resources, you must complete the instructions in Chapter 6, “Activating Basic Security”.

Creating Resource Names for MAINVIEW for DB2 CMD-Level Security: DB2CMDDF and DB2CMDPE

Use these CLISTs to implement additional security with the CMD feature for the MAINVIEW for DB2 product. By choosing the CMD feature, you are securing use of DB2 commands from a terminal session.

CMD-level resource names are listed in "Resources for MAINVIEW for DB2" on page 69. If you need to modify these CLISTs, you should change a copied version.

BBSAMP contains the DB2CMDDF CLIST to help you identify the resources to be secured to RACF and prompts you to enter the

- security class to use ($BOOLE)
- prefix to use as the high-level qualifier for each resource
- SSID of the BBI-SS PAS you are securing
- default access rights for all resources: UACC(READ) or UACC(NONE)
- target you are securing (targets must be existing targets in the BBPARM member BBIJNT00)
- command and operand to be secured

Run this CLIST once for every BBI-SS PAS and for every target you are securing.

The DB2CMDPE CLIST helps you permit access to the secured resources for a specific user and prompts you to enter the

- security class to use ($BOOLE)
- prefix to use as the high-level qualifier for each resource
- SSID of the BBI-SS PAS to which you are permitting access
- target to which you are permitting access (targets must be existing targets in the BBPARM member BBIJNT00)
- resources to which you are permitting access

Run this CLIST once for every BBI-SS PAS and user being permitted access.

Important

If you plan to implement CMD-level security, you must complete the instructions in Chapter 6, "Activating Basic Security".

Chapter 6. Activating Basic Security

This chapter explains how to create and update the BBSEC member and add it to the logical parmlib concatenation to activate security.

Note: The logical parmlib is an optional feature of OS/390 that is controlled by the LOADxx member in SYS1.PARMLIB. This feature allows ten data sets to be concatenated in front of SYS1.PARMLIB.

This chapter assumes you have

- identified which product resources you want to secure as described in Chapter 3, “Reviewing Product Resources” on page 13
- defined the resources to your ESM and granted or denied access to them as described in Chapter 4, “Configuring Your ESM for Basic Security” on page 81

Creating the Basic Security Member BBSEC

Basic security for the following MAINVIEW products is controlled by the presence of control statements in the logical parmlib member BBSEC:

MAINVIEW AutoOPERATOR
MAINVIEW FOCAL POINT
MAINVIEW for CICS
MAINVIEW for DB2
MAINVIEW for DBCTL
MAINVIEW for IMS Online
MAINVIEW SYSPROG Services
MAINVIEW Total Object Manager (TOM)
COMMON STORAGE MONITOR

To create a BBSEC member:

1. Create a PDS member called BBSEC in a working data set or your personal data set.

   Important! Do not add BBSEC to the logical parmlib concatenation until you are ready to activate security. Once you have completed the member and want to activate security, you will move BBSEC to BBPARM or the logical parmlib concatenation, as described on page 118.

2. Basic security for a product or group of products is activated by the TYPE statement in BBSEC. The format of the TYPE statement is described in "BBSEC TYPE= Statement" on page 113.

   Use an editor to add as many TYPE statements as necessary to activate security for your products. Save your changes.

3. When you are ready to activate security, see "Adding BBSEC to BBPARM or the Logical Parmlib" on page 118.

4. Consider protecting the data set containing BBSEC from unauthorized modification.

BBSEC Syntax

Observe the following syntax when updating BBSEC:

- Each TYPE statement and its parameters can be specified in positions 1–72 on one or more lines, as shown in Figure 1
- Enter keywords in the format `keyword=value` (for example, `TYPE=BBI`)
- Indicate comment lines with an asterisk (*) in column 1
- To continue a TYPE statement on the next line, put a comma at the end of the line to be continued
- Do not break multivalue keywords across lines

  For example, `FEATURE=(CMD,APPL,EXEC)` must appear on the same line.

A sample BBSEC member is shown here:

```
* Activates security for common resources:
*
TYPE=BBI,SS=SJSB,PREFIX=BBM,CLASS=$BOOLE
*
* Activates security for SYSPROG and CSMON services:
*
TYPE=SYSPROG,
AUDIT=FAILED,
TRACE=NO, INIT=YES
```

Figure 1. Sample BBSEC Member

BBSEC TYPE= Statement

The format of the BBSEC TYPE= statement varies depending on the product or products that you want to secure.

MAINVIEW SYSPROG Services and COMMON STORAGE MONITOR

```
TYPE=SYSPROG,PREFIX=prefix,CLASS=class,ACTION=[DISABLE|ENABLE],
          AUDIT=[NONE|ALL|UPDATE|FAILED|BOTH],
          TRACE=[YES|NO],WARN=[YES|NO],INIT=[YES|NO],
          ERRPROC=[FAIL|ALLOW],AUDRTE=(9),AUDDSC=(4),
          SYSID=[SMF|CVT],USECNNM=[YES|NO]
```

MAINVIEW AutoOPERATOR Advanced Security and MAINVIEW for DB2 Command-Level Security

```
TYPE=product,SSID=ssid,PREFIX=prefix,CLASS=class,
          FEATURE=(feature,feature,feature)
```

MAINVIEW Total Object Manager (TOM)

```
TYPE=TOM,TOMID=tom_id,PREFIX=prefix,CLASS=class
```

All Other Products

```
TYPE=product,SSID=ssid,PREFIX=prefix,CLASS=class
```

The TYPE statement parameters are as follows:

Parameter	Explanation
TYPE=*product*	Activates security for the specified product or group of products. Specify one of the following products on each TYPE statement. Specify as many TYPE statements as needed. BBI — Activates security for the resources that are common to the following products, as described on page 16: MAINVIEW AutoOPERATOR MAINVIEW FOCAL POINT MAINVIEW for CICS MAINVIEW for DB2 MAINVIEW for DBCTL MAINVIEW for IMS Online AAO — Activates additional security for MAINVIEW AutoOPERATOR commands, applications, EXECs, ALERTs, and parameter data as described in "Resources for MAINVIEW AutoOPERATOR: Advanced Security" on page 48. **A TYPE=BBI statement must also be specified.** CICS — Activates additional security for the resources described in "Resources Common to MAINVIEW for CICS and the MAINVIEW AutoOPERATOR for CICS Option" on page 34. **A TYPE=BBI statement must also be specified.** DB2 — Activates additional security for the resources described in "Resources for MAINVIEW for DB2" on page 69. **A TYPE=BBI statement must also be specified.** SYPROG — Activates security for the resources described in "Resources Common to MAINVIEW SYSPROG Services, MAINVIEW AutoOPERATOR, and MAINVIEW for OS/390" on page 23. Either TYPE=SYSPROG or TYPE=RESOLVE may be specified. TOM — Activates security for MAINVIEW Total Object Manager (TOM) resources as described in "Resources for MAINVIEW Total Object Manager (TOM)" on page 70.
SSID=*ssid* or SS=*ssid*	**Not for TYPE=SYSPROG or TYPE=TOM.** Is the one- to four-character BBI-SS PAS name where resources are to be protected. The SSID is part of the resource name used to define resources to your ESM. Each SSID used in a resource name must be specified on a separate TYPE statement in BBSEC. For example, if you have defined resources names to your ESM that included SSIDs of SYS1, SYS2, SYS3, and SYS4, you must specify a TYPE statement for each of these SSIDs. Refer to "BBSEC Examples" on page 117 for examples. **Note:** Although an asterisk (*) can be used as a wildcard for the `SSID` value and activates security for all BBI-SS PASs, it is not recommended.

Parameter	Explanation (Continued)
TOMID=*tom_id*	**For TYPE=TOM Only.** Is the one- to eight-character ID of the TOM address space that is being secured. The TOM ID is specified on the EXEC statement of the TOM started task JCL.
PREFIX= *prefix*	Is the one- to eight-character prefix for all resource names. The default prefix is BBM. Specify the prefix that you used in the resource names when defining resources to your ESM.
CLASS=*class*	Is the optional one- to eight-character security class name used to identify your MAINVIEW product resources. The default security class is $BOOLE. This security class must be defined to your ESM as described in Chapter 4, "Configuring Your ESM for Basic Security".
FEATURE=(CMD) FEATURE=(CMD,APPL, EXEC,ALRT,PARM)	**For TYPE=DB2, specify:** CMD for DB2 command-level security **For TYPE=AAO, specify one or more of the following values:** CMD MAINVIEW AutoOPERATOR command and parameter security APPL MAINVIEW AutoOPERATOR application security EXEC MAINVIEW AutoOPERATOR individual EXEC authority ALRT MAINVIEW AutoOPERATOR ALERTs authority PARM MAINVIEW AutoOPERATOR parameter The FEATURE parameter and its keywords must be specified on a single line in BBSEC. Separate mulitple keywords by a comma, as shown at left. Enclose keywords in parentheses.
ACTION=[ENABLE| DISABLE]	**For TYPE=SYSPROG only.** Indicates whether security should be enabled or disabled. Specify DISABLE only to disable security calls due to a problem. The default is ENABLE.
AUDIT=[NONE|ALL| UPDATE|FAILED| BOTH]	**For TYPE=SYSPROG only.** Determines if, and to what extent, auditing of service requests should be performed. Audit messages are displayed according to the descriptor and routing codes you have specified. The parameter values are as follows: NONE (Default.) No audit messages are produced. ALL An audit message is produced for every security request. UPDATE Audit messages are produced for all security requests except those containing a function of LIST in the entity string, regardless of the result. FAILED An audit message is produced when the security system denies access. BOTH An audit message is produced when the criteria for either FAILED or UPDATE is met.

Parameter	Explanation (Continued)
AUDDSC=(4)	**For TYPE=SYSPROG only.** Specifies the descriptor codes for audit and trace messages. Specify one or more codes separated by commas and enclosed in parentheses. The default is AUDDSC=(4).
AUDRTE=(9)	**For TYPE=SYSPROG only.** Specifies the route codes for audit and trace messages. Specify one or more route codes separated by commas and enclosed in parentheses. The default is AUDRTE=(9).
ERRPROC=[FAIL|ALLOW]	**For TYPE=SYSPROG only.** Indicates how requests should be handled if the security system is not accessible. ERRPROC=FAIL indicates that all requests should be denied when the security system is not accessible. ERRPROC=ALLOW indicates that all requests should be allowed. The default is ERRPROC=FAIL.
INIT=[YES|NO]	**For TYPE=SYSPROG only.** Indicates whether a security call should be issued during initialization to determine if initialization should be allowed to continue. The default is INIT=NO.
SYSID=[SMF|CVT]	**For TYPE=SYSPROG only.** Indicates the source of the system identifier. If SYSID=SMF is specified, the SMF identifier in field SMCASID is used. If SYSID=CVT is specified, the value in CVTSNAME is used. If CVTSNAME does contain a value, the identifier in SMCASID is used. The default is SYSID=CVT.
TRACE=[YES|NO]	**For TYPE=SYSPROG only.** Indicates whether a message containing the parameters for each security request is issued. The default is TRACE=NO.
USECNNM=[YES|NO]	**For TYPE=SYSPROG only.** USECNNM=YES causes SYSPROG to use the console name for security verification. USECNNM=NO causes SYSPROG to use its address space authority for security checks. The default is USECNNM=YES.
WARN=[YES|NO]	**For TYPE=SYSPROG only.** Indicates whether a request should be allowed even though the security system denied access. WARN=YES allows you to test security without denying access. The default is WARN=NO.

BBSEC Examples

To use the default prefix BBM for the resources and identify them to the default security class $BOOLE, BBSEC might contain the following lines:

```
* The following turns on security for BBI-SS PAS SYS1, SYS2,
* SYS3, and SYS4 to security class $BOOLE

TYPE=BBI,SS=SYS1
TYPE=BBI,SS=SYS2
TYPE=BBI,SS=SYS3
TYPE=BBI,SS=SYS4
```

To use a prefix of CHARLIE for the resources and identify them to a security class of SECURE for multiple BBI-SS PASs with different SSID names, BBSEC might contain the following lines:

```
* The following turns on security for BBI-SS PAS SYS1, SYS2,
* SYS3, and SYS4 to security class SECURE

TYPE=BBI,SS=SYS1,PREFIX=CHARLIE,CLASS=SECURE
TYPE=BBI,SS=SYS2,PREFIX=CHARLIE,CLASS=SECURE
TYPE=BBI,SS=SYS3,PREFIX=CHARLIE,CLASS=SECURE
TYPE=BBI,SS=SYS4,PREFIX=CHARLIE,CLASS=SECURE
```

To secure the CMD and APPL features of MAINVIEW AutoOPERATOR, define them as follows:

```
* The following turns on security for BBI-SS PAS SYS1, to
* security class $BOOLE

TYPE=BBI,SS=SYS1,CLASS=$BOOLE

* The following turns on security for the CMD and the APPL
* features of AutoOPERATOR security

TYPE=AAO,SSID=SYS1,FEATURE=(CMD,APPL)
```

The following example of BBSEC secures the MAINVIEW AutoOPERATOR CMD feature for multiple BBI-SS PASs with different SSIDs:

```
* The following turns on security for BBI-SS PAS SYS1, SYS2,
* SYS3, and SYS4

TYPE=BBI,SS=SYS1
TYPE=BBI,SS=SYS2
TYPE=BBI,SS=SYS3
TYPE=BBI,SS=SYS4

* The following turns on security for the CMD feature of AutoOPERATOR
* advanced security for BBI-SS PASs SYS1, SYS2, SYS3, and SYS4

TYPE=AAO,SS=SYS1,FEATURE=(CMD)
TYPE=AAO,SS=SYS2,FEATURE=(CMD)
TYPE=AAO,SS=SYS3,FEATURE=(CMD)
TYPE=AAO,SS=SYS4,FEATURE=(CMD)
```

The following example of BBSEC activates security for the MAINVIEW SYSPROG Services and COMMON STORAGE MONITOR services:

```
*
* Activates security for SYSPROG and CSMON services:
*
TYPE=SYSPROG,
AUDIT=FAILED,
TRACE=NO, INIT=YES
```

Adding BBSEC to BBPARM or the Logical Parmlib

Use the following procedure for MAINVIEW AutoOPERATOR, MAINVIEW FOCAL POINT, MAINVIEW for CICS, MAINVIEW for DB2, MAINVIEW for DBCTL, MAINVIEW for IMS Online, and MAINVIEW Total Object Manager (TOM).

1. Test your BBSEC changes by inserting them in a BBSEC member in the BBPARM data set (or TOMPARM for MAINVIEW Total Object Manager). This process will prevent other BBI-SS PASs from being affected by your changes.
2. Warm start each BBI-SS PAS for the member to take effect.
3. Test and fine tune security at the BBI-SS PAS level before activating security for your entire system.
4. Once you are satisfied with the way security is working at the BBI-SS PAS level, move BBSEC to the logical parmlib concatenation. The BBSEC member in the logical parmlib concatenation overrides any BBSEC members in the BBPARM or TOMPARM data set.

For MAINVIEW SYSPROG Services and COMMON STORAGE MONITOR, BBSEC is processed by program BBXSAF00. BBXSAF00 obtains BBSEC from the OS/390 logical parmlib concatenation (available in OS/390 version 1 release 2 and later) during OS/390 system initialization. Therefore, BBSEC can reside in any data set that is included in the logical parmlib concatenation: it does not have to be in SYS1.PARMLIB. If you change the

BBSEC member in the logical parmlib concatenation and you want that change to become effective before the OS/390 system is restarted, you can execute program BBXSAF00, as described on page 121. Use the following procedure to activate BBSEC:

1. After you have updated BBSEC to include the appropriate TYPE=SYSPROG (or TYPE=RESOLVE) statements, copy BBSEC to a data set in the logical parmlib concatenation.
2. Wait for the OS/390 system to be restarted, or execute program BBXSAF00, as described in "Activating Changes to BBSEC by Executing BBXSAF00" on page 121.

Disabling Basic Security

To disable basic security for all products:

1. Remove the BBSEC member from the BBPARM or TOMPARM data set *and* the logical parmlib concatenation, or rename all BBSEC members to a different name.
2. Warm start each affected BBI-SS PAS.

To disable basic security for MAINVIEW AutoOPERATOR, MAINVIEW FOCAL POINT, MAINVIEW for CICS, MAINVIEW for DB2, MAINVIEW for DBCTL, MAINVIEW for IMS Online or MAINVIEW Total Object Manager (TOM):

1. In the BBSEC member in both the BBPARM (or TOMPARM) data set *and* the logical parmlib concatenation, change the appropriate TYPE= statements to comments by typing an asterisk in column 1 of the TYPE statement.
2. Warm start each affected BBI-SS PAS.

To disable basic security for MAINVIEW SYSPROG Services and COMMON STORAGE MONITOR:

1. Update any TYPE=SYSPROG (or TYPE=RESOLVE) statements in the BBSEC member in both the BBPARM data set and in the logical parmlib concatenation data set to specify ACTION=DISABLE.
2. Wait for the OS/390 system to be restarted, or execute program BBXSAF00, as described in "Activating Changes to BBSEC by Executing BBXSAF00" on page 121.

Chapter 7. Securing SYSPROG and CSMON Services

To secure MAINVIEW SYSPROG Services and Common Storage Monitor services, you define rules, permits, or profiles to control access to the services, as described in Chapter 4, "Configuring Your ESM for Basic Security". The resource names for the services are described in Chapter 3, "Reviewing Product Resources". You then add the TYPE=SYRPROG statement to the BBSEC security member, as described in Chapter 6, "Activating Basic Security".

This chapter explains how to

- execute BBXSAF00 to activate changes to the BBSEC security member
- review or override the default *function* qualifier used in the resource name for each SYSPROG service
- use an exit to change the *function* qualifier in a resource name for a service to anything you like

Activating Changes to BBSEC by Executing BBXSAF00

The BBSEC member contains security parameters and is used to activate basic security (see Chapter 6, "Activating Basic Security" for details). For MAINVIEW SYSPROG Services and Common Storage Monitor services, the BBSEC member is obtained from the OS/390 system logical parmlib concatenation (available in OS/390 version 1 release 2 and later). If you change BBSEC for MAINVIEW SYSPROG Services and Common Storage Monitor services and you want that change to become effective before the OS/390 system is restarted, you can execute program BBXSAF00 at any time.

Note: Do not run BBXSINIT to activate your changes. Doing so wastes common storage and may adversely affect MAINVIEW products.

Use the sample JCL shown in Figure 2 to execute BBXSAF00. Replace `hilevel.BBLINK` with the name of the data set that contains BBXSAF00.

```
//BBSEC EXECPGM=BBXSAF00,PARM=REFRESH
//STEPLIB  DD DISP=SHR,DSN=hilevel.BBLINK
//SAFCRPT  DD SYSOUT=*
//
```

Figure 2. Sample Job for Executing BBXSAF00

Consider protecting BBXSAF00 and the data set that contains BBSEC from unauthorized access.

Determining the Function Qualifier for SYSPROG Resource Names

All SYSPROG service resource names end with a function qualifer. You can determine the default function qualifier used in the resource name for each SYSPROG service in one of two ways:

- Use the XSERVICE service to display information about the service. To do so, enter `XS,` *service*, where *service* is the name of the service you are interested in.
- Browse the service name table, which is distributed as member ASTXA1SN in the BBSRC data set.

You can use the service name table to review or override the default function qualifier used in the resource name for each SYSPROG service. The service name table associates a service name to a corresponding load module name and defines attributes for the service.

Each service is defined with a ASTSNAME macro in the service name table. For example, the ASTSNAME macro for the ALLOCATE service is

ASTSNAME ALLOCATE,A1,OPER=YES,FUNCTION=UPDATE

The FUNCTION parameter specifies the function qualifier that is to be appended to the resource name passed to the ESM. The FUNCTION can be one of the following keywords:

LIST Indicates the function displays data.

UPDATE Indicates the function updates data.

EXIT Indicates that an exit routine for the service is called to determine the *function* qualifier. Certain SYSPROG services use BMC-provided exit routines. You may write your own exit, as described in "Using an Exit to Modify the Function Qualifier in SYSPROG Resource Names".

For a description of the other ASTSNAME macro parameters, see the ASTX1SN member itself.

Using an Exit to Modify the Function Qualifier in SYSPROG Resource Names

All SYSPROG service resource names end with a function qualifer of LIST or UPDATE. However, you can write an exit routine to set the function qualifier to any value you like.

When FUNCTION=EXIT is specified on the service's ASTSNAME statement in ASTXA1SN, SYSPROG attempts to call an exit routine. The exit name is ASTSEC*xx*, where *xx* is the two character module ID specified as the second positional parameter in the ASTSNAME macro.

If the exit routine exists, it executes and examines the parameters specified on the service request to determine the appropriate qualifier. If the exit routine does not exist, the qualifier is set to UPDATE.

The function qualifier cannot exceed seven characters.

Exit routines are supplied for services that have both LIST and UPDATE functions. The source for these exit routines may be found in BBSRC and used as a model for creating your own exit for a service.

Determining the Function Qualifier for CSMON Resource Names

The function qualifiers for CSMON services are shown in Table 12.

Table 12. CSMON *function* Qualifiers

Service	***function* Qualifier**
OVERVIEW	LIST
SUMMARY	LIST
STATUS	LIST
DISPLAY	LIST
BROWSE	LIST
ALTER	UPDATE
FREE	UPDATE

CSMON services are not defined in the ASTXA1SN service name table and cannot be modified with a user routine.

Using the Password Utility

BMC Software strongly suggests that you implement the basic security SAF interface instead of using the password utility for MAINVIEW SYSPROG Services.

However, the password utility is provided for those customers who do not have an ESM. The password utility is called after the SAF interface is called.

To restrict access to a service, you assign a password to the service by submitting a batch job. The JCL and control statements are explained in "Password Utility JCL" on page 124.

When a user requests a password-protected service, the following message is issued:

`AMT00AA ENTER PASSWORD FOR SERVICE` *service-name*

If the correct password is entered in response to the message, the service is invoked. If an incorrect password is entered, access is denied and the following message is issued:

```
AMT00BI PASSWORD INVALID, REQUEST IGNORED
```

The user must request the service again.

Password Utility JCL

To add, change, or delete passwords for one or more services, use the sample JCL shown in Figure 3.

```
//SECURITY  JOB     ACCT
//SECURITY  EXEC    PGM=ASTXA1SC
//STEPLIB   DD      DISP=SHR,DSN=hilevel.BBLINK
//SYSPRINT  DD      SYSOUT=A
//LOAD      DD      DISP=SHR,DSN=hilevel.BBLINK
//SYSIN     DD      *
//SYSIN DD *
```

Figure 3. Password Utility JCL

Substitute your load library for `hilevel.BBLINK.`

Specify the control statements on the `SYSIN DD` statement according to these rules:

- To **add** a password, use this syntax:

  service_name,,new_password

  For example, `ENQ,,NEWPASS` establishes the password NEWPASS for the ENQ service.

- To **change** a password, use this syntax:

  service_name,old_password,new_password

  For example, `ENQ,NEWPASS,NEWRPASS` changes ENQ's password from NEWPASS to NEWRPASS.

- To **delete** a password, use this syntax:

  service_name,old_password

  For example, `ENQ,NEWRPASS` removes password protection for the ENQ service.

- Begin each *service_name* in column 1.

- Specify *service_name* as the complete name of the service or as a shorter version that qualifies as a unique identifier. For example, the *service_name* for ENQUEUES could be ENQUEUES, ENQUE, ENQ, or EN, all of which are unique.

Example: The control statements in Figure 4 on page 125 specify the following changes:

- Establish a new password, NEWPASS, for the ENQ service

- Replace the old password, OLDAPF, with the new password, NEWAPF, for the APF service

- Delete the password ZAPPASS from the ZAP service

```
//SYSIN DD *
ENQ,,NEWPASS
APF,OLDAPF,NEWAPF
ZAP,ZAPPASS
/*
```

Figure 4. Sample Password Utility Control Statements

The SYSIN statements shown in Figure 4 produces the output shown in Figure 5.

```
AMTPW00I  ---SYSPROG, PASSWORD MAINTENANCE UTILITY---

AMTPW10I  APF,********,********
AMTPW20I  OLD PASSWORD SUCCESSFULLY DELETED
AMTPW30I  NEW PASSWORD SUCCESSFULLY ADDED

AMTPW10I  ENQ,,*******
AMTPW30I  NEW PASSWORD SUCCESSFULLY ADDED

AMTPW05I  ZAP,*******
AMTPW20I  OLD PASSWORD SUCCESSFULLY DELETED

AMTPW90I  PASSWORD MAINTENANCE COMPLETE - HIGHEST RETURN CODE WAS
00
```

Figure 5. Sample Password Utility Output

Password Utility Return Codes

The password utility return codes are as follows:

00 All requested functions completed without error
04 One or more functions completed with warnings
08 One or more functions terminated because of control statement syntax errors
12 One or more functions failed to complete successfully
16 Processing terminated prematurely

Part 3. Enhanced Security

This part describes enhanced security and the steps that users of MAINVIEW products requiring enhanced security should take to secure their products.

Chapter 8. Introduction to Enhanced Security 131
Which Products Use Enhanced Security? 131
How Enhanced Security Works 132
Authorization at the CAS, PAS, and TS User Levels 132
MAINVIEW Resources 133
Resource Naming Convention 133
Finding Entity Names 135
Exploiting the Resource Naming Convention 135
Security Parameter Library 137
Sharing a Security Parameter Library Between CASs 137
Views for Administering Enhanced Security 138
Using Security Views to Change Resource Attributes 139
Establishing Enhanced Security 141
Disabling Enhanced Security for All MAINVIEW Resources 142
Determining Which Security Members Are Active 143
CAS Security Members 143
PAS Security Member 144

Chapter 9. Configuring Your ESM for Enhanced Security 145
Configuring CA-ACF2 145
Step 1: Setting the Required GSO Record Options 146
Step 2: Authorizing the PAS and CAS 146
Step 3: Updating the CA-ACF2 SAFDEF List 148
Step 4: (Optional) Adding a SAF Resource Class to CA-ACF2 149
Step 5: (Optional) Defining Rules for Controlling View Resources 151
Configuring RACF 154
Step 1: Authorizing the CAS and PAS 154
Step 2: (Optional) Adding Resource Classes to RACF 155
Step 3: Creating RACF Security Profiles 157
Step 4: Specifying Profiles to Control Access to Product Resources 158
Configuring CA-TOP SECRET 160
Step 1: Defining a New CA-TOP SECRET Facility Matrix Entry 161
Step 2: Authorizing the CAS and PAS 162
Step 3: (Optional) Adding a New SAF Resource Class 163
Step 4: Defining Ownership of Resources 164
Step 5: Controlling Access to Product Resources 165

Chapter 10. Class Definitions 167
Working with Class Definition Members 167
Displaying a List of Class Definition Members (SECDEFL) 167
Creating a Class Definition Member 168
Activating a New Class Definition Member 169
Deleting a Class Definition Member 169
Working with Class Definitions 170
Displaying a Class (SECDEF) 170
Changing a Class 171

Adding a New Class 173
Deleting a Class 174
Recovering a Deleted Class 174
Dynamically Activating Class Changes 175

Chapter 11. Parameter Definitions 177
Displaying a List of Parameter Definitions (SEPDEFL) 178
Displaying a Parameter Definition (SEPDEF and SEPDEFD) 178
Changing a Parameter Definition 179
Creating a New Parameter Definition 182
Activating a Parameter Definition 183
Deleting a Parameter Definition 183

Chapter 12. Resource Definitions 185
Before You Begin 185
Working with Resource Definition Members 186
Displaying a List of Members using the SERDEFL View 186
Creating a New Resource Definition Member 186
Activating a New Member for Common Resources 187
Activating a New Member for Product Resources 187
Deleting a Member 188
Working with Resource Definitions 189
Browsing a Resource Definition 190
Enabling a Resource Definition 191
Disabling a Resource Definition 191
Changing a Resource Definition 191
Canceling Resource Definition Changes 193
Saving a Resource Definition 193

Chapter 13. Protecting the MAINVIEW Security Interface 195

Chapter 14. Resource Definitions Listed by Product 197
Common MAINVIEW Resources 197
Plex Manager Resources 205
CMF MONITOR and MAINVIEW for OS/390 Resources 214
MAINVIEW Alarm Manager Resources 234
MAINVIEW Explorer 239
MAINVIEW for CICS Resources 240
MAINVIEW for DATA ACCELERATOR Compression 263
MAINVIEW for DB2 Resources 265
MAINVIEW for IMS Online and MAINVIEW for DBCTL Resources 269
MAINVIEW for IP Resources 279
MAINVIEW for Linux – Servers Resources 283
MAINVIEW for UNIX System Services Resources 288
MAINVIEW for VTAM Resources 296
MAINVIEW for WebSphere Application Server Resources 298
MAINVIEW for WebSphere MQ Resources 300
MAINVIEW Storage Resource Manager (SRM) Resources 323
MAINVIEW SYSPROG Services Resources 363
MAINVIEW VistaPoint Resources 367

Chapter 15. Resource Definitions Listed by View 369
Common Views 369
Plex Manager Views 370
CMF MONITOR and MAINVIEW for OS/390 Views 371
MAINVIEW Alarm Manager Views 378
MAINVIEW Explorer Views 379
MAINVIEW for CICS Views 380
MAINVIEW for DATA ACCELERATOR Compression Views 384
MAINVIEW for DB2 Views 385
MAINVIEW for IMS Online and MAINVIEW for DBCTL Views 386
MAINVIEW for IP Views 389
MAINVIEW for Linux – Servers Views 392
MAINVIEW for UNIX System Services Views 394
MAINVIEW for VTAM Views 397
MAINVIEW for WebSphere Application Server Views 398
MAINVIEW for WebSphere MQ Views 400
MAINVIEW Storage Resource Manager (SRM) Views 403
MAINVIEW SYSPROG Services Views. 410
MAINVIEW VistaPoint Views 410

Chapter 8. Introduction to Enhanced Security

This chapter provides information about the following topics:

- which products use enhanced security
- how enhanced security works
- authorization at the CAS, PAS, and TS user (UAS) levels
- MAINVIEW resources
- views for administering enhanced security
- security parameter library
- establishing enhanced security
- disabling enhanced security
- determining which security members are active

Note: The information in this chapter does not apply to MAINVIEW Alternate Access. To implement MAINVIEW Alternate Access security, see "Defining Security for MAINVIEW Alternate Access" on page 413.

Which Products Use Enhanced Security?

The following products operate either partially or completely in windows mode. When operating in windows mode, they use enhanced security:

- CMF MONITOR
- MAINVIEW Alarm Manager
- MAINVIEW Explorer
- MAINVIEW for CICS
- MAINVIEW for DATA ACCELERATOR Compression
- MAINVIEW for DB2
- MAINVIEW for DBCTL
- MAINVIEW for IMS Online
- MAINVIEW for IP
- MAINVIEW for OS/390
- MAINVIEW for UNIX System Services
- MAINVIEW for VTAM
- MAINVIEW for WebSphere Application Server
- MAINVIEW for WebSphere MQ (formerly known as MAINVIEW for MQSeries)
- MAINVIEW Storage Resource Manager (SRM)
- MAINVIEW SYSPROG Services
- MAINVIEW VistaPoint
- Plex Manager

Some of these products also operate in full-screen mode and, therefore, also use basic security. See Chapter 2, "Introduction to Basic Security" for more information on basic security.

Enhanced security is **enabled** for all of these products when they are shipped. If you want to disable security completely, see "Disabling Enhanced Security for All MAINVIEW Resources" on page 142.

How Enhanced Security Works

Like any security interface, enhanced security does not actually protect resources. Instead, it identifies MAINVIEW resources to your ESM and asks if a user is authorized to access the resource, as described here:

1. MAINVIEW resources are identified to the ESM using a class name and entity names. There are hundreds of resources, however, they can all be identified by 13 resource definitions.
2. A MAINVIEW user requests access to a protected resource. The MAINVIEW product passes the resource class name and entity name to the MAINVIEW security interface.
3. The MAINVIEW security interface passes the class name and entity name to the MVS System Authorization Facility (SAF).
4. SAF passes the request to your ESM, conceptually asking the ESM “Can this user access this resource under these circumstances?”
5. The ESM checks the user ID against the existing permit, profile, or rule (depending on the ESM) that protects the resource.
6. The ESM responds to the question with yes, no, or maybe, which it relays through SAF to the MAINVIEW security interface.
7. The MAINVIEW security interface relays the ESM’s response, permitting or denying user access to the resource, to the MAINVIEW product, display, or action.

Authorization at the CAS, PAS, and TS User Levels

Access authorization requests are made to the ESM at the CAS, PAS, and TS user levels, as described here.

- CAS
  The coordinating address space (CAS) provides all communication between a terminal session (TS) and an address space where a product runs (PAS) and other CASs running on local and remote systems. Plex Manager, shipped with all MAINVIEW products, runs in the CAS. Other products, like MAINVIEW VistaPoint, may run in a CAS. The CAS itself requires ESM authorization to access certain resources before it can initialize.

  Each time a CAS starts, non-modifiable CAS subsystem intialization authorization requests may be made to

  – verify that the user ID associated with the CAS started task has the authority to define the specified MVS subsystem ID (create the MVS SSCT)

  – determine if the address space has the authority to initialize the MVS subsystem (activate and use the specified MVS SSCT)

  – determine if the address space can initialize without any MAINVIEW security

- PAS
  Each product runs in a product address space (PAS). The address space where the product is running requires ESM authorization to common and product resources managed by MAINVIEW enhanced security. After successful CAS initialization, authorization

requests are made when a product attempts to connect to the CAS and the product identifies itself as a service point to Plex Manager in the CAS.

- TS user
  Users requesting views and attempting to perform actions in a MAINVIEW window require ESM authorization to protected resources. This occurs after the CAS initializes, a product identifies itself to the CAS, and the product initializes (whether it is in a separate PAS or not).

MAINVIEW Resources

The data displayed in views and the actions executed from views are considered MAINVIEW resources. Some resources are common to all MAINVIEW products. Common resources are managed by Plex Manager, which runs in the CAS. Other resources are specific to a MAINVIEW product, which runs in the PAS.

To control access to MAINVIEW resources, the resources must be identified to the ESM. There are hundreds of MAINVIEW resources, however, all of them can be identified by 13 resource definitions. The process of identifying these resources to the ESM is simplified by

- exploiting the naming convention used for resources
- using generic (or masking) characters when creating profiles, permits, or rules to control access to resources

The resource naming convention is described in the following section. Examples of combining the naming convention with the generic capabilites of your ESM are provided on page 135.

Resource Naming Convention

MAINVIEW resources are identified to an ESM by a resource class name and entity name.

Class Name: For MAINVIEW enhanced security, the default class for resources is $BBM, however, by default, it is translated automatically to FACILITY, which is a predefined to CA-ACF2, CA-Top Secret, and RACF. For information about using a class other than FACILITY, see Chapter 10, “Class Definitions” .

Entity Names: MAINVIEW resource entity names consist of multiple qualifiers separated by periods, similar to MVS data set names. Generally, the format of the entity name for data is

`BBM.`*`product.context.inttable.suffix`*

The format of the entity name for an action is

`BBM.`*`product.context.intaction.suffix`*

However, not all entity names follow this convention. Some entity names have additional qualifiers and some have fewer qualifiers. The entity name qualifiers are listed here.

BBM — The prefix for all MAINVIEW resources.

product — The ID of the product or service point in control of the window where data is being accessed or an action is being attempted. The ID can be as follows:

ID:	Product or Service Point:
CMF	CMF MONITOR
COMMON	Resources common to many products
MVALARM	MAINVIEW Alarm Manager
MVCICS	MAINVIEW for CICS
MVCSMON	Common Storage Monitor
MVDAC	MAINVIEW for DATA ACCELERATOR Compression
MVDB2	MAINVIEW for DB2
MVIMS	MAINVIEW for IMS Online and MAINVIEW for DBCTL
MVIP	MAINVIEW for IP
MVMQS	MAINVIEW for WebSphere MQ (formerly known as MAINVIEW for MQSeries) and MAINVIEW for WebSphere MQ Integrator
MVMVS	MAINVIEW for OS/390
MVSPS	MAINVIEW SYSPROG Services
MVSRM	MAINVIEW SRM
MVSRMHSM	MAINVIEW SRM EasyHSM
MVSRMSGC	MAINVIEW SRM SG-Control
MVSRMSGD	MAINVIEW SRM StorageGUARD Historical Space
MVSRMSGP	MAINVIEW SRM StorageGUARD Historical Performance
MVUSS	MAINVIEW for UNIX System Services
MVVP	MAINVIEW VistaPoint
MVVTAM	MAINVIEW for VTAM
MVWEB	MAINVIEW for WebSphere Application Server
PLEXMGR	Plex Manager

context The context set in the window where the resource is being accessed. This qualifer is site-dependent.

inttable The internal ID of the table being accessed. The data displayed in a view is obtained from a table of information on a particular subject, such as CICS programs or DB2 subpools. Any number of views can display information from the same table. Some views obtain information from more than one table.

intaction The internal ID of an action being requested. This ID is usually the action name or an abbreviation of the action name.

suffix Indicates the type of resource and can be one of the following values:

Suffix:	Controls access to:
AA	any action.
AO	any action performed on the table currently accessed (*inttable*).
OA	any action performed on a row of data in a tabular view or the data displayed in a detail view.
OD	table data and, therefore, any view that displays data from that table.

CN	connection to a CAS and, therefore, access to the MAINVIEW environment.
TA	target context; without access, a user cannot select any product from the MAINVIEW Selection Menu.
TC	creation of a target context; without access, a PAS can not define itself as a PAS.
TH	global thresholds.
TS	trusted status of a PAS for inheriting a security environment.
PA	any product-level action, regardless of which view or table is accessed.
DATASET	data set name

#field The internal ID of a specific row of data for which an action has been specified.

ssid The subsystem identifier specified with the SSID parameter in the CAS and PAS started task procedures.

system The system identifier or system name where the target and MAINVIEW product are executing and from where resource access is occurring.

Finding Entity Names

Every MAINVIEW resource is defined in a resource definition, which includes the entity name of the resource. To determine the resource definition used for a particular view, see "Resource Definitions Listed by View" on page 369.

For a complete list of resource definitions and their corresponding entity names for each MAINVIEW product, see "Resource Definitions Listed by Product" on page 197.

In addition to those lists, the SERDEF view displays a single resource definition, including the entity name in the **Entity** field. For information on the SERDEF view, see "Browsing a Resource Definition" on page 190.

For more information about resource definitions, see "Using Security Views to Change Resource Attributes" on page 139.

Exploiting the Resource Naming Convention

The resource naming convention is designed to simplify the process of identifying resources to your ESM. When creating permits, profiles, or rules to control access to resources, an explicit or generic value can be specified for any qualifier in the entity name by using the masking characters supported by the ESM. The resource naming convention, combined with the generic capabilities of your ESM, allows you to identify hundreds of resources with just a few rules, profiles, or permits.

For example, to grant or deny access to any MAINVIEW function, you can define a single rule, profile, or permit that identifies a generic connect-to-CAS resource because, by default, all connect-to-CAS resources begin with BBM and end with CN:

In a CA-ACF2 rule:

```
$KEY(BBM.-.CN)
```

In a CA-Top Secret permit:

```
(BBM.*.CN)
```

In a RACF profile:

```
BBM.**.CN
```

Granting access to this resource would potentially allow access to any MAINVIEW function.

If you want to permit access to most tables (and therefore the views that display data from those tables), but deny access to certain tables, you might define a rule, permit, or profile that protects all of the table data resources, whose names, by default, begin with BBM and end with OD.

In a CA-ACF2 rule:

```
$KEY(BBM.-.-.-.OD)
```

In a CA-Top Secret permit:

```
(BBM.*.*.*.OD)
```

In a RACF profile:

```
BBM.**.OD
```

Then, you could define a rule, permit, or profile for a specific table:

In a CA-ACF2 rule:

```
$KEY(BBM.-.-.MYAG0.OD)
```

In a CA-Top Secret permit:

```
(BBM.*.*.MYAGO.OD)
```

In a RACF profile:

```
BBM.**.MYAGO.OD
```

For more information on creating rules, permits, and profiles, see Chapter 9, “Configuring Your ESM for Enhanced Security”.

Security Parameter Library

The default security parameter, class and resource definitions are distributed as members in the BBACTDEF library (do not modify these members). When you customize parameter, class and resource definitions using the security views, the customized definitions are saved in the security parameter library. This library is referenced by the BBSECURE DD statement in the CAS and PAS started task procedures. Its members are read during CAS and PAS initialization to establish security.

The security parameter library is created for you during AutoCustomization. If you did not use AutoCustomization and want to customize security definitions, you must create the security parameter library and define it in the CAS and PAS started task procedures as described in the *MAINVIEW Common Customization Guide*.

The security parameter library contains the following members:

BBMTRN*nn*	Resource definitions for Plex Manager
BBMTSP*nn*	Class definitions for each known resource class
BBMTSS*nn*	Parameters definitions that specify the ESM and its attributes
BBMZRN*nn*	Common resource definitions used by all MAINVIEW products

Depending on which MAINVIEW products are installed, the security parameter library might also contain one or more of the following members:

ASTTRN*nn*	Resource definitions for MAINVIEW SYSPROG Services
BBDTRN*nn*	Resource definitions for CMF MONITOR and MAINVIEW for OS/390
BBFTRN*nn*	Resource definitions for MAINVIEW for IMS Online and MAINVIEW for DBCTL
BBHTRN*nn*	Resource definitions for MAINVIEW Alarm Manager
BBJTRN*nn*	Resource definitions for MAINVIEW VistaPoint
BBKTRN*nn*	Resource definitions for MAINVIEW for CICS
BBPTRN*nn*	Resource definitions for MAINVIEW for DB2
BBSTRN*nn*	Resource definitions for MAINVIEW for WebSphere MQ (formerly known as MAINVIEW for MQSeries) and MAINVIEW for WebSphere MQ Integrator
BBUTRN*nn*	Resource definitions for MAINVIEW for UNIX Systems Services
BBWTRN*nn*	Resource definitions for MAINVIEW Explorer
DACTRN*nn*	Resource definitions for MAINVIEW for DATA ACCELERATOR Compression
TACTRN*nn*	Resource definitions for MAINVIEW for IP
SOPTRN*nn*	Resource definitions for MAINVIEW for VTAM
MVWTRN*nn*	Resource definitions for MAINVIEW for WebSphere Application Server

where *nn* is the two-character member name suffix. The default suffix is 00. The suffix enables you to create different versions of each member. The suffix for the parameter, class, and common resource definitions is associated to a CAS in the CASDEF view. The member suffix for product resource definitions is associated to a PAS in the TGTDEFD view.

Sharing a Security Parameter Library Between CASs

If you have a shared DASD environment, CASs that have the same security requirements can share a security parameter library by referencing the same library on the BBSECURE DD statement in each CAS started task procedure. This option eliminates the need to create or maintain separate security parameter libraries for each CAS.

If your CASs have different security requirements, you can still share the security parameter library, however, you must create the appropriate members with different member name suffixes and then use the CASDEF view to associate each CAS to the appropriate member suffix.

Views for Administering Enhanced Security

The generalized views for enhanced security are as follows:

EZSEC	Is an Easy Menu with hyperlinks to other security views.
SECURITY	Lists the security views. You can select a view from the list or place your cursor on the view and press Enter to hyperlink to the view.

The views for managing class definitions are as follows:

SECDEFL	Lists all the security parameter library resource class definition members. You can select a member for display or delete a member.
SECDEF	Displays a single class definition. Use this view to create, update, or delete a class definition.

For information about these views, see Chapter 10, “Class Definitions”.

The views for managing parameter definitions are as follows:

SEPDEFL	Lists the security parameter definition members. You can select a member for display or delete a member.
SEPDEF	Displays the contents of a member. You can use this view to change security parameters for the selected member or to create a new member.

For information about these views, see Chapter 11, “Parameter Definitions”.

The views for managing resource definitions are as follows:

EZSECRES	Is an extension of EZSEC that allows you to change the context or product before displaying product resources.
SERDEFP	Lists the active products for the current context when hyperlinking from EZSECRES.
SERDEFC	Lists the active targets for the product selected by hyperlinking from SERDEFP when hyperlinking from EZSECRES.
SERDEFOV	Lists the default and individual resource definitions for the current product and context.
SERDEFEX	Lists the individual resource definitions referenced by the default resource definition selected by hyperlinking from the +++ value in the `Exp` field in SERDEFOV.
SERDEFL	Lists all of the resource definition members. You can select a member for display or delete a member.
SERDEF	Displays a single resource definition. Use this view to create, change, enable, or disable a resource definition.

For information about these views, see Chapter 12, “Resource Definitions”.

Using Security Views to Change Resource Attributes

Each MAINVIEW resource has a corresponding resource definition. The resource definition contains the class and entity name for the resource, as well as other security attributes. Resources that have similar functions are grouped together and represented by a *default* resource definition. Changing the default resource definition provides a short-cut for changing multiple resource definitions. The individual resource definitions provide additional flexibility, allowing you to override the default resource definition.

To change resource definitions for a specific product, do the following:

1. From within PLEXMGR, type **EZSEC** on the COMMAND line. The EZSEC view is displayed, as shown in Figure 6.

```
04JAN2002  13:37:23 --------- MAINVIEW WINDOW INTERFACE (R4.0.02)-------------
COMMAND  ===>                                                SCROLL ===> CSR
CURR WIN ===> 1        ALT WIN ===>
 W1 =EZSEC=============CXTSTJ===*========04JAN2002==13:37:22====PLEXMGR===D==1
                                Security Menu

  Security Tasks
                            +----------------------+
. Review Class Definitions  |   Place cursor on    |
. Review Security Parms     |    menu item and     |
. Common Resources          |     press ENTER      |
> Product Resources         +----------------------+
```

Figure 6. EZSEC View

2. Hyperlink from the **Product Resources** field to display the EZSECRES view.
3. Hyperlink from the **Choose Another Product** field.

   A help panel is displayed that provides information on selecting a product. When you press the END key, the SERDEFP view is displayed.
4. Position the cursor on `MVMVS` in the **Product** field and press **Enter**.

   A help panel is displayed that provides information on selecting a context. When you press the END key, the SERDEFC view is displayed with information on the contexts defined for MAINVIEW for OS/390.
5. Position the cursor on a context name in the **Context** field and press **Enter**.

   A help panel is displayed that provides information on resource categories. When you press the END key, the SERDEFOV view is displayed, as shown in Figure 7.

```
21FEB2002  10:27:21 -------- MAINVIEW WINDOW INTERFACE (R4.0.02) -------------
COMMAND  ===>                                                SCROLL ===> CSR
CURR WIN ===> 1        ALT WIN ===>
>W1 =SERDEFOV==========DXTSTI===*========(00 EDIT          )====MVMVS===D====4
CMD Description                            Enab Exp Change Comment
--- ------------                           ---- --- --------------
    Default - Table Data                   Yes  +++
    Default - Any Table Actions            Yes  +++
    Default - Primary Actions (All Views)  Yes  +++
    Default - Specific Table Action        Yes  +++
```

Figure 7. SERDEFOV View and Default Resource Definitions

Most MAINVIEW products have four default resource definitions. The default resource definitions for MAINVIEW for OS/390 are shown in Figure 7. The description for a default resource definition begins with the word `Default`, for example, `Default - Table Data`.

Changing a default resource definition changes all of the resource definitions represented by the default definition. For example, if you disable the `Default - Table Data` resource definition, you disable every resource definition represented by that default definition.

To display the individual resource definitions represented by the default definition, position the cursor on the +++ displayed in the **Exp** field of the SERDEFOV view and press **Enter**. The SERDEFEX view, containing the individual resource definitions, is displayed, as shown in Figure 8.

```
21FEB2002  10:43:47 -------- MAINVIEW WINDOW INTERFACE (R4.0.02) ------------
COMMAND  ===>                                                 SCROLL ===> CSR
CURR WIN ===> 1        ALT WIN ===>
>W1 =SERDEFOV=SERDEFEX=DXTSTI===*========(00 BROWSE        )====MVMVS===D==12
CMD Description                              Enab Change Comment
--- ------------                             ---- --------------
    Addr Space - Table Data                  Yes
    Addr Space across interval - Table Data  Yes
    Addr Space Device Use/Delay- Table Data  Yes
    Address Space Enq Use/Delay - Table Dat  Yes
    Address Space HSM Use/Delay - Table Dat  Yes
    Address Space JES Use/Delay - Table Dat  Yes
    Address Space MSG Use/Delay - Table Dat  Yes
    Addr Space in Workload - Table Data      Yes
    Address Space XCF Use/Delay - Table Dat  Yes
    Channel Path - Table Data                Yes
    Channel Path on LCU - Table Data         Yes
    Common Storage - Table Data              Yes
```

Figure 8. SERDEFEX View and Individual Resource Definitions

For more information on changing resource definitions, see Chapter 12, “Resource Definitions”.

Establishing Enhanced Security

Establishing enhanced security involves the following steps:

1. Required. Make sure the user ID of the individual that will perform the following steps is authorized to access each CAS, and the security parameter library for each CAS, on each MVS image.

2. Optional. Change the class definition. If you want to use a resource class other than FACILITY, use the SECDEF view, as described in "Changing a Class" on page 171.

3. Optional. Change the parameter definition. The security parameter definition specifies which ESM is to be used. However, the distributed parameter definition automatically determines which ESM is active on the MVS image. Do not modify the parameter definition unless you

   – have both CA-ACF2 and RACF installed and want to use RACF

   – use the RACF GROUP feature, and do not want it inherited on a connected system

   – use an ESM other than RACF, CA-ACF2, or CA-Top Secret

   To change the parameter definition for any of these reasons, use the SEPDEF view, as described in "CHANGE SECURITY PARAMETERS Dialog" on page 180.

4. Required. Review the resource names for the common resources and product resources you want to protect.

   For an explanation of resource names, see "Resource Naming Convention" on page 133. To determine the resource definition used for a particular view, see "Resource Definitions Listed by View" on page 369. For a complete list of resource definitions and their corresponding entity names for each MAINVIEW product, see "Resource Definitions Listed by Product" on page 197.

5. Optional. Change the resource definitions. If any MAINVIEW resources are already identified to the ESM using a site-specific naming convention, you might want to change the MAINVIEW entity names to match that naming convention. For information on changing the entity name, class name, access intent, or logging attributes of a resource definition, see "Changing a Resource Definition" on page 191.

6. Required. Authorize the CAS and PAS started tasks, create rules, profiles, or permits to identify the resources to the ESM , and grant or deny access to the resources, as described in "Configuring Your ESM for Enhanced Security" on page 145.

7. Optional. If you created any new class, parameter, or common resource definitions members with a member name suffix other than 00, specify the new suffixes in the CASDEF view and reinitialize the CAS. If you created any new product resource definitions with a member name suffix other than 00, specify their suffix in the TGTDEFD view and reinitialize the PASs that use them. These members are listed and described in "Establishing Enhanced Security" on page 141.

Note: Some MAINVIEW products use both enhanced and basic security, as described in "Types of Security" on page 3. If any of your products use basic security, you must also follow the instructions in Part 2, "Basic Security".

Disabling Enhanced Security for All MAINVIEW Resources

You can disable all security if you decide you do not need MAINVIEW resources secured at this time. Use the following procedure to disable all enhanced security:

1. Display the MAINVIEW Selection Menu.
2. Select Option P for Plex Manager.
3. On the COMMAND line, enter **SEPDEF**.
4. On the COMMAND line, enter **EDIT** to request an edit session.
5. On the COMMAND line, enter **CHAnge**.
6. At the top of the Change Security Parameters dialog, specify **NONE** for **ESM Type**.
7. Press the END key and enter **SAVE** on the COMMAND line to save your change.
8. Reinitialize the CAS. Reinitializing the CAS disrupts any connected product address spaces and cross-system sessions on the local system (the CAS and all associated PASs).

Important

An ESM Type of NONE bypasses security for the entire subsystem (the CAS and all associated PASs). During CAS initialization, MAINVIEW requests ESM authorization using the following parameters:

Class name	FACILITY
Entity name	BBMSS.ESMTYPE.NONE

You must have a RACF profile, CA-Top Secret permit, or CA-ACF2 rule defined to authorize this request or CAS initialization terminates. See Chapter 9, “Configuring Your ESM for Enhanced Security” on page 145 for additional information.

If you do not have access to the SEPDEF view, use the following procedure to change the ESM type parameter:

1. Check the security parameter library for an existing BBMTSS00 member.

   If there is a BBMTSS00 member already, rename it if you want to keep these global security parameters.
2. Create a new member named BBMTSS00.
3. Add the following statement to the new member:

   ```
   ESM ESMTYPE(NONE);
   ```
4. Save the member.
5. Reinitialize the CAS. Reinitializing the CAS disrupts any connected product address spaces and cross-system sessions on the local system (the CAS and all associated PASs).

Determining Which Security Members Are Active

During CAS and PAS initialization, the parameter, class, and resource definition members in the security parameter library are read to establish the MAINVIEW security environment. There can be multiple versions of a member, each having a unique suffix. The default suffix is 00. This section explains how to determine which members are active for a CAS and PAS. For more information on the security parameter library, see page 141.

CAS Security Members

To display the security parameter members currently defined to the CAS:

1. Display the MAINVIEW Selection Menu.
2. Select Option P for Plex Manager.
3. Display the CASDEF view by entering **CASDEF** on the COMMAND line of Plex Manager.
4. Position the cursor on the name of the CAS in the **CAS Name** field and press **Enter** to display the CASDEFD view.
5. Review the information in the **Parmlib Suffixes** section of this view.

   The suffixes for the security parameter library members defined to the CAS are shown in the following fields:

   SepDef Suffix Two-character suffix for the parameter definition member.

   SecDef Suffix Two-character suffix for the class definition member.

   Common Suffix Two-character suffix for the common resource definition member.
6. To see the current parameter definition member for the CAS:
   a. Display the SEPDEFL view by entering **SEPDEFL** on the COMMAND line of Plex Manager.
   b. Select the member with the same **Member Suffix** field value as the value shown in the CASDEFD **SepDef Suffix**. The SEPDEF view is displayed. For more information about this view, select its name from the window information line and press your HELP key.
7. To see the current class definition member used for all resource access authorizations made for both common and product-specific resources:
   a. Display the SECDEFL view by entering **SECDEFL** on the COMMAND line of Plex Manager.
   b. Select the member with the same **Member Suffix** field value as the value shown in the CASDEFD **SecDef Suffix** field. The SECDEF view is displayed. For more information about this view, select its name from the window information line and press your HELP key.
8. To see the current resource definition member used for common resource access authorizations:
   a. Display the SERDEFL view by entering **SERDEFL** on the COMMAND line of Plex Manager.

b. Select the member that has a **Product** description of `COMMON` and a **Member Suffix** value that is the same as the value shown in the **Common Suffix** field of the CASDEFD view.

For more information about these views, select the view name in the window information line with your cursor and press your HELP key.

PAS Security Member

To display the current resource definition member used for a specific MAINVIEW product:

1. Display the CASDEF view by entering **`CASDEF`** on the COMMAND line of Plex Manager.
2. Position the cursor on the name of the CAS in the **CAS Name** field and press **Enter** to display the CASDEFD view.
3. Review the information in the **TgtDef Suffix** field of the **Parmlib Suffixes** section of this view. The **TgtDef Suffix** field value shows the two-character suffix for the target definition member in the security parameter library defined to the CAS. A target definition parameter member (see the TGTDEF view described in the *MAINVIEW Administration Guide*) specifies a

   •target for a specific product, such as PLXMGR on SYSA

   •resource definition member in the security parameter library for that product
4. Display the TGTDEFL view by entering **`TGTDEFL`** on the COMMAND line of Plex Manager.
5. Select the member with the same **Member Suffix** field value as the value shown in the CASDEFD **TgtDef Suffix** field. The TGTDEF view is displayed.
6. Look in the **Product** field of the TGTDEF view for the product that you want, and then place the cursor on the name of the CAS in the **CAS Name** field and press **Enter**. The TGTDEFD view is displayed.
7. Check the suffix value from the **SerDef Suffix** field in the **Security Info** section of the TGTDEFD view.
8. To see the resource definition member in the security parameter library used for that product:

   a. Display the SERDEFL view by entering **`SERDEFL`** on the COMMAND line of a view from that product.

   b. Select the member with the same **Member Suffix** field value as the value that is shown in the **SerDef Suffix** field of the TGTDEFD view.

For Plex Manager, select the member with a **Product** field value of `PLEXMGR`, not `COMMON`.

For more information about these views, select the view name in the window information line with your cursor and press your HELP key.

Chapter 9. Configuring Your ESM for Enhanced Security

This chapter provides the instructions for customizing the CA-ACF2, RACF, and CA-TOP SECRET ESMs.

Configuring CA-ACF2

This section provides information about the administrative actions for CA-ACF2 that must be performed to support the MAINVIEW security interface.

Note: See Chapter 8, "Introduction to Enhanced Security" on page 131, for general information about the enhanced security functions.

To define the security subsystem to CA-ACF2:

1. Set the required CA-ACF2 Generalized System Options (GSO) record options; see "Step 1: Setting the Required GSO Record Options" on page 146, for instructions.
2. Define LOGONID(s) for the CAS and each PAS; see "Step 2: Authorizing the PAS and CAS" on page 146, for instructions.
3. Update the SAFDEF records; see "Step 3: Updating the CA-ACF2 SAFDEF List" on page 148 for instructions.
4. Optionally add SAF Resource Classes to CA-ACF2; see "Step 4: (Optional) Adding a SAF Resource Class to CA-ACF2" on page 149, for instructions.
5. Optionally define CA-ACF2 rules for controlling access to MAINVIEW resources; see "Step 5: (Optional) Defining Rules for Controlling View Resources" on page 151, for instructions.

Step 1: Setting the Required GSO Record Options

All required CA-ACF2 Generalized System Options (GSO) record options must be set correctly to support a full-function SAF-based security interface. A number of CA-ACF2 GSO records must have certain options specified.

To set the GSO record options:

1. Review the information in Table 13, which describes each required option setting, to determine the required options for your site.

Table 13. Settings for CA-ACF2 Global System Options

GSO record name	Required option	Description
PSWD	PSWDXTR	Enables RACROUTE EXTRACT to be executed. This option enables LOGONIDs with the BDT attribute to inherit a user's security environment from another address space or from another MVS image (remote system). **Note:** This option is not absolutely required. However, if it is not in effect, an ACF2 error message is issued for every address space that uses BMC Software product facilities, and there may be certain environments in which it is not possible to inherit LOGONIDs from another MVS image.
OPTS	STC	Enables started tasks to have security control block structures built to support SAF-based MUSASSs.

2. The following TSO commands illustrate how to set all the required options:

```
ACF
SET CONTROL(GSO)
CHANGE OPTS STC
CHANGE PSWD PSWDXTR
END
```

3. After the required options have been changed, use the following operator commands to cause them to take effect:

```
F ACF2,REFRESH(OPTS)
F ACF2,REFRESH(PSWD)
```

Step 2: Authorizing the PAS and CAS

LOGONIDs **must** be defined for the CAS and each PAS.

This step describes how to

- define LOGONIDs with the proper attributes
- associate the started task procedure names for the CAS and each PAS with the defined LOGONIDs

A CA-ACF2 LOGONID **must** be associated with each started task. The LOGONID must be able to execute as a started task and must be authorized to access all data sets used within the address space.

Note: The CAS **must** execute as a started task. PASs normally execute as started tasks, but this is not required. Most PASs can also execute as batch jobs.

A LOGONID for each address space is associated with that address space by the CA-ACF2 started task control (STCXIT) installation exit or by an exact name match between the started task name and an ACF2 LOGONID. The names of the associated LOGONIDs need not match the names of the started procedures. However, if they do **not** match, you must use CA-ACF2's STCXIT to establish the correspondence between each started task procedure name and its associated LOGONID.

If you do not explicitly assign a LOGONID in your CA-ACF2 started task control exit, STCXIT, and if the name of the started task procedure does not have a corresponding matching LOGONID, the LOGONID specified in the GSO OPTS record DFTSTC parameter is assigned by CA-ACF2. Typically, this LOGONID **cannot** be used successfully, because specific attributes are required for the LOGONID (such as MUSASS) that is used with the address spaces; these attributes typically are not specified for the default STC LOGONID.

For additional information about the CA-ACF2 started task control exit, see the *CA-ACF2 System Programmer's Guide*.

To define LOGONIDs for the started tasks:

1. Use the following TSO commands, which illustrate how to define LOGONIDs for the CAS and a PAS:

```
ACF
SET LID
INSERT USING(ACFSTCID) BBMCAS   NAME(CAS)                    +
                                STC SOURCE(STCINRDR) NOTSO   +
                                MUSASS JOBFROM NO-SMC BDT    +
                                RESTRICT
INSERT USING(ACFSTCID) BBMPAS   NAME(PAS)                    +
                                STC SOURCE(STCINRDR) NOTSO   +
                                MUSASS JOBFROM NO-SMC BDT    +
                                RESTRICT
END
```

Notes:

- The `MUSASS` attribute on the LOGONIDs is **required**.
- The `JOBFROM` and `NO-SMC` attributes are required, but will be set automatically at execution time if not previously established as attributes for each LOGONID.
- The `BDT` attribute on the LOGONIDs is **required**. This attribute enables the PSWDXTR GSO PSWD record option to be effective, permitting the CAS and PAS to inherit security environments from user address spaces.

2. Associate the CAS and PAS LOGONIDs with their started task procedure names.

   The LOGONID used for a started task address space is determined by the CA-ACF2 Started Task Validation Exit (STCXIT). The name of the started task validation exit is specified by the STCXIT parameter of the EXIT GSO record. If your enterprise has coded an STCXIT, you must associate the LOGONID(s) with the started task procedure names defined for the PAS(s) and CAS.

   If your enterprise does not have an active STCXIT that can perform this function, the LOGONID used by CA-ACF2 defaults to the started procedure name, if a LOGONID with a matching name is defined. Otherwise, the default started task LOGONID (ACFSTCID) is used, which typically **cannot** be used successfully, because it is not likely to have both the `MUSASS` and `BDT` attributes.

Step 3: Updating the CA-ACF2 SAFDEF List

For the CA-ACF2 6.*n* SAF interface to process the calls to CA-ACF2, the CA-ACF2 SAFDEF records must be updated with specifications concerning the control points where the RACROUTE calls are being made. CA-ACF2 6.*n* does not process RACROUTE calls unless you have explicitly instructed it to do so by updating the SAFDEF records.

The MAINVIEW security interface passes control point identification information to CA-ACF2 using the `SUBSYS=` and `REQSTOR=` parameters of the RACROUTE macro instruction. To customize these values, use the SEPDEF view, as discussed in Chapter 11, “Parameter Definitions” on page 177, and the SERDEF view, as discussed in Chapter 12, “Resource Definitions” on page 185.

1. Use the SEPDEF view in Plex Manager to customize these parameters by changing the field values for SUBSYS and REQSTOR in the appropriate Global Security Parameters member of the security parameter library (DDname BBSECURE).

   The default for these parameters is as follows:

   SUBSYS The MVS Subsystem ID (SSID) defined for use by the CAS.

   REQSTOR Not altered by the security interface. Defaults to the value specified for each resource in the resource definition table (either `COMMON` or client product-specific), which typically is the name of the module or subroutine where the resource manager initiated the call to CA-ACF2.

2. Once you have customized BBMTSS*nn* (and possibly altered the `SUBSYS(`*`SSID`*`)` parameter from its default value) using the SEPDEF view, enable CA-ACF2 to process security invocations by specifying the selected SUBSYS value in a CA-ACF2 SAFDEF record. Here is a sample TSO command for this specification:

   ```
   ACF
   SET CONTROL(GSO)
   INSERT SAFDEF.BBCS ID(BBCS) MODE(GLOBAL)REP
   RACROUTE(SUBSYS=BBCS   REQSTOR=-)
   END
   ```

   In this example, the MVS SSID selected for use with the CAS is `BBCS`.

3. After the new SAFDEF record is inserted, the in-storage SAFDEF list must be refreshed. To do this, issue the operator command:

   ```
   F ACF2,REFRESH(SAFDEF)
   ```

Step 4: (Optional) Adding a SAF Resource Class to CA-ACF2

Note: Skip this step if you plan to use the class name FACILITY.

Before you define unique generalized resource rules, you may need to define one or more new SAF resource classes to CA-ACF2.

Access to the CAS and PAS resources are, by default, protected by generalized resource rules in external SAF class `FACILITY` (internal class `$BBM`, which is, by default, transformed to external class `FACILITY`).

If you want to use external SAF resource class `FACILITY`, you should have already mapped SAF resource class `FACILITY` to some CA-ACF2 generalized resource rule type. This is usually rule type `FAC`, the CA-ACF2 default.

If you do not want to use external SAF resource class `FACILITY`, you need to use the SECDEF view to customize the resource class definition table, member BBMTSP*nn*, which resides in the CAS security parameter library (DDname BBSECURE), and alter resource class `$BBM` to change the external SAF resource class that internal class `$BBM` translates to (the `NEXT` parameter). You may use any SAF resource class that you want, including `DATASET`.

Note: Certain resources that use SAF class `FACILITY` cannot be customized. In the following discussions of these resources, this fact is noted when appropriate.

To support other external SAF resource classes in an MVS system with CA-ACF2, you must define the rule type to which ACF2 is to map the external SAF resource class. To do this, you must add new CLASMAP records. The CLASMAP GSO records specify the correspondence between a SAF resource *class* name and its associated CA-ACF2 generalized resource rule *type.*

1. Select the CA-ACF2 resource rule types that you will use to define the rules to control access to product resources.
2. Update the CA-ACF2 CLASMAP records. The following lines are example TSO commands you could use:

   ```
   ACF
   SET CONTROL(GSO)
   INSERT CLASMAP.class      +
          RESOURCE(class)    +
          RSRCTYPE(type)     +
          ENTITYLN(39)
   END
   ```

3. Refresh the in-storage copy of the CLASMAP tables using the following operator command:

   ```
   F ACF2,REFRESH(CLASMAP)
   ```

4. If you want to make the rules for the selected resource types resident (this is not required), use TSO commands like the following examples:

   a. To add rule types to the INFODIR GSO record:

      ```
      ACF
      SET CONTROL(GSO)
      CHANGE INFODIR ADD TYPES(R-Rtype)
      END
      ```

      Notes:

      •If your CA-ACF2 configuration has not already been updated to use INFODIR GSO records instead of RESDIR, use the following command to add the rule type to the list for which in-storage directories will be constructed at CA-ACF2 initialization:

      ```
      CHANGE RESDIR ADD TYPES(R-type)
      ```

      •Resident rule directories with transient rule data are not supported. For all rule types referred to by the security interface, if they are to be made resident by CA-ACF2, you must specify TYPES(R-R*type*).

   b. To refresh the RESDIR information:

      ```
      F ACF2,REFRESH(RESDIR)
      ```

   c. To refresh the in-storage INFODIR data:

      ```
      F ACF2,REFRESH(INFODIR)
      ```

   d. To build (or rebuild) the in-storage directory for a rule type:

      ```
      F ACF2,REBUILD(type)
      ```

Nonresident rules with masked rule keys for CAS and Plex Manager resources **are not supported**. So, if your product-referenced rules are not globally resident, you must direct CA-ACF2 to build a (globally) resident rule directory, as in Step 6, above, or you must direct the product to build a directory and to bring the rules into private storage (LSQA) when required.

A directory can be built and the resource rules brought into private storage by altering the `RESDIR` parameter in the ACF2 section of the external SAF resource classes involved. Use the SECDEF view to customize the resource class definition member BBMTSP*nn* in the CAS security parameter library.

Step 5: (Optional) Defining Rules for Controlling View Resources

To control view resources, you use generalized resource rules or ordinary data set rules, or both.

Before you apply the information in this section, review your CA-ACF2 configuration to ensure that the following requirements are met:

- The LOGONIDs for all users should be defined to CA-ACF2 in each MVS system. For any end user, the LOGONID must be the same in every MVS system.

  If your enterprise is required to use the GSO PSWD record PSWDXTR option, the password for each LOGONID must be the same on each MVS system. Normally, this will not be required (and so passwords for the same LOGONID on multiple systems do not need to be synchronized).

- End user access authority should be defined to CA-ACF2 in a consistent manner in all MVS systems.

You can create resource rules or you can use ordinary data set rules to protect resources. You must consider the following points and determine which approach best suits the needs of your enterprise:

- You can use either ordinary data set rules or generalized resource rules to specify how CA-ACF2 is to control access to resources.
- Ordinary data set rules are used by translating the resource entity names to *pseudo data set* names and the resource class name to `DATASET`.

Each choice has advantages and disadvantages, which differ from one enterprise to another, depending upon the following conditions:

- How familiar your security administration personnel are with generalized resource rules and the facilities and procedures in place to manipulate them
- The extent to which the RACF style of generic resource entity name construction is to be used
- Whether or not CA-ACF2 Release 6.1 or 6.2 is in use

The resource entity names shown as examples translate most directly to ordinary CA-ACF2 data set rules. However, your enterprise may have standards that prohibit the use of data set rules for any resource that is not, in fact, a data set. You may, therefore, be required to use CA-ACF2 generalized resource rules. See the following sections for more information:

- "Using Ordinary CA-ACF2 Data Set Rules with SAF Resource Classes" on page 152
- "Using Generalized CA-ACF2 Resource Rules with SAF Resource Classes" on page 152

Using Ordinary CA-ACF2 Data Set Rules with SAF Resource Classes

If you choose to use ordinary CA-ACF2 data set rules, review "Step 5: (Optional) Defining Rules for Controlling View Resources" on page 151.

Use the SECDEF view to customize the resource class definition table, member BBMTSP*nn* of the CAS security parameter library (DDname BBSECURE) to specify that the internal resource class, `$BBM`, is to be translated to an external class DATASET (the `NEXT` parameter).

You need to indicate that authorization requests for resources should be validated using rules for the resource class DATASET (that is, ordinary CA-ACF2 data set rules). To do this, customize the class definition entry for internal class `$BBM` to indicate that the `NEXT` class is `DATASET`.

Because the default resource entity names are not likely to adhere to your existing data set naming convention, you should transform the resource entity name. You can prefix the resource entity name with a constant character string to add, in effect, a specific high-level qualifier to the pseudo data set name, unless the default, `BBM.`, is acceptable.

For example, if `BBM.` conflicts with your existing data set naming convention, but `$BBM.` does not, you could specify in BBMTSP*nn* a PREFIX (an entity name prefix) string of `$` for internal resource class `$BBM`. Thus `$` will be prefixed to all the entity names, which, by default, begin with `BBM.`, resulting in pseudo data set names that begin with a high-level qualifier of `$BBM`. Use the SEPDEF view to specify a prefix for class `$BBM`, which will be applied before class name transformation (the `NEXT` parameter).

The following examples show how you can define ordinary data set rules to control view resources. The ordinary data set rule examples assume you have transformed class `$BBM` to `DATASET` and prefixed the entity name with a $ (US dollar sign).

- To prohibit the use of the views and related action commands associated with the DIAGMSG view universally, specify

```
$KEY($BBM)
$MODE(ABORT)
 -.-.MYA40.- UID(-)
```

- To permit READ access to users whose UID string begins with OPER, specify

```
$KEY($BBM)
$MODE(ABORT)
 -.-.MYA40.- UID(OPER) READ(A)
 -.-.MYA40.- UID(-)
```

Using Generalized CA-ACF2 Resource Rules with SAF Resource Classes

If your enterprise standards permit you to take advantage of the improvements made to the generalized resource rules starting with CA-ACF2 Release 6.0, many former restrictions may no longer apply. Thus, with CA-ACF2 6.1 and later, resource rules may be acceptable, from an ease-of-use perspective.

Note: CA-ACF2-imposed restrictions may still limit your ability to use resource rules. For example, RACROUTE FASTAUTH calls cannot be used with masked resource rule keys until Release 6.1, and NEXTKEY cannot be used in resource rules referenced through FASTAUTH until Release 6.2.

Alternatively, your enterprise may choose not to use CA-ACF2's rule key masking character choices to define the rules that control view resources. In this case, you do not need the additional function and features enabled by the use of ordinary CA-ACF2 data set rules. In either case, your use of all CA-ACF2 rule specification facilities is fully supported and is subject only to CA-ACF2 limitations.

The following examples show how you can define generalized resource rules to control access to resources:

- To prohibit the use of the views and view action commands associated with the DIAGMSG view in the MAINVIEW for OS/390 product in context SYSP#2, specify

  ```
  $KEY(BBM.MVMVS.SYSP#2.MYA40  UID(-) PREVENT
  ```

- To permit access by users whose UID string begins with OPER, specify

  ```
  $KEY(BBM.MVMVS.SYSP#2.MYA40  UID(OPER) SERVICE(READ) ALLOW
   UID(-) PREVENT
  ```

Configuring RACF

This section provides information about the administrative actions for RACF (Version 1.8 and later) that must be performed to support the MAINVIEW security interface.

Note: See Chapter 8, "Introduction to Enhanced Security" on page 131, for general information about the security functions. To define the security subsystem to RACF:

1. Define security attributes for started tasks; see "Step 1: Authorizing the CAS and PAS" on page 154.
2. Optionally, add resource classes to RACF for resources; see "Step 2: (Optional) Adding Resource Classes to RACF" on page 155.
3. Create security profiles for resources; see "Step 3: Creating RACF Security Profiles" on page 157.
4. Specify security profiles to control access to resources; see "Step 4: Specifying Profiles to Control Access to Product Resources" on page 158.

Step 1: Authorizing the CAS and PAS

The CAS and MVS PAS run as started tasks. Therefore, you must associate the procedure names for the CAS and PAS with a suitably authorized user ID, using the STARTED class or the started procedures table ICHRIN03.

When a started task is initiated, RACF checks to see if the STARTED class is active. If it is active, RACF looks for a matching profile in the STARTED class to determine the user ID and group ID for the started task. A generic profile such as ** or **.** with a valid STDATA segment will be selected in the absence of a more specific one and will therefore effectively override any entry in ICHRIN03. If there is no applicable profile in the STARTED class, RACF will use the started procedures table, ICHRIN03, to determine the user ID and group ID to be used for the started task. If the STARTED class is not active, RACF only uses the started procedures table, ICHRIN03.

Note: If the user ID and group ID assigned by the selected STARTED class profile or entry in the started procedures table, ICHRIN03, are not defined to RACF, the started tasks execute with only the limited authority of an undefined user. In this case, the address space is able to access protected resources only if the universal access authority for the resource is sufficient to allow the requested operation.

To define started task user IDs:

1. Define CAS and PAS user IDs.

   The following example RACF commands illustrate how to define user IDs for the CAS and PAS:

   ```
   ADDUSER BBMCAS DFLTGRP(SYSMGMT) OWNER(SYSPROG)
   ADDUSER BBMPAS DFLTGRP(SYSMGMT) OWNER(SYSPROG)
   ```

   Note that no special attributes, such as OPERATIONS, are required for the RACF user IDs associated with the CAS and PAS. In fact, it is highly desirable that user IDs **without** any special attributes be used for these address spaces.

2. Define the CAS and PAS started tasks.

   The following example RACF commands illustrate how to associate the previously defined user IDs to a specific started procedure name. In this example, we assume that the procedure names that are being used are BBICAS and BBIPAS:

```
RDEFINE STARTED BBICAS.* OWNER(SYSPROG)       +
STDATA(USER(BBMCAS) GROUP(SYSMGMT))
RDEFINE STARTED BBIPAS.* OWNER(SYSPROG)       +
STDATA(USER(BBMPAS) GROUP(SYSMGMT))
SETROPTS RACLIST(STARTED) REFRESH
```

For additional information about defining profiles in the STARTED class or adding entries to the RACF started procedures table, ICHRIN03, see the *OS/390 Security Server (RACF) Security Administrator's Guide (IBM)* manual.

Step 2: (Optional) Adding Resource Classes to RACF

If you want resource access authorizations to use SAF class `FACILITY`, no further customization is necessary because `FACILITY` is already defined in the RACF CDT and RTB for all supported releases of RACF.

Security can be customized to use one or more resource classes other than the default, `FACILITY`. The following sections show you how to add an additional SAF resource class to ICHRRCDE, the RACF class descriptor table (CDT), and to ICHRFR01, the RACF router table (RTB), and how to specify profiles that control access to CAS and product resources.

The resource class names for most resources are entirely variable and are based on a naming convention that is shown in the SERDEF detail views, SERDEFD or SERDEFE, for a specific resource. The detail views are accessed through the SERDEF view; see Chapter 12, "Resource Definitions" on page 185, for more information. BMC Software ESM security provides default values, but you can change the default to specify an existing resource class that is already defined, and you can change the default entity names to specify existing profiles that are already defined.

When you are using RACF and you do not want to use SAF resource class `FACILITY`, you need to do the following:

1. Customize the resource class definition table, member BBMTSP*nn* of the CAS security parameter library (DDname BBSECURE).

   For detailed information, see Chapter 12, "Resource Definitions" on page 185.

   Note: Certain resource names that use SAF class `FACILITY` cannot be customized. In the following discussions of these resources, this fact is noted when appropriate.

2. Create or update ICHRRCDE, the RACF resource class descriptor table, as follows:

   a. Code the ICHERCDE macro for each class.

      Figure 9 is an example of the code for the ICHRRCDE table.

```
TITLE 'RACF RESOURCE CLASS DESCRIPTOR TABLE - ICHRRCDE'
  *
  *
  class ICHERCDE CLASS=class,
                 ID=id,                                    X
                 POSIT=posit,                              X
                 FIRST=ANY,                                X
                 OTHER=ANY,                                X
                 MAXLNTH=44,        or larger, if necessary X
                 RACLIST=ALLOWED,                          X
                 OPER=NO
  *
  *  NULL ENTRY MUST BE LAST ENTRY
  *
           END
```

Figure 9. Example of Source Code for the RACF ICHRRCDE Table

Note: The values shown in the example may not be applicable to your site requirements.

If an ICHRRCDE member already exists, add the new class entries to the existing source and proceed with the assembly and link edit steps.

   b. Assemble the source.

      When you assemble the ICHRRCDE table, the following MNOTES may be generated for a new class entry:

```
4,*** CLASS NAME DOES NOT CONTAIN NATIONAL CHARACTER   OR DIGIT IN    X
           FIRST FOUR POSITIONS ***
4,*** ID VALUE NOT WITHIN RECOMMENDED RANGE (128-255) ***
4,*** POSIT VALUE NOT WITHIN RECOMMENDED RANGE (19-56) ***
```

      These are only warnings; they should be ignored.

   c. Link edit the resulting object module, replacing the current ICHRRCDE load module.

3. To create or update ICHRFR01, the RACF router table:

   a. Code the ICHRFRTB macro for each class.

Figure 10 is an example of the code for the ICHRFR01 table.

```
TITLE 'RACF ROUTER TABLE - ICHRFR01'
  *
  *
  class  ICHRFRTB CLASS=class,                          X
               ACTION=RACF
  *
           ICHRFRTB TYPE=END
  *
           END
```

Figure 10. Example of Source Code for the RACF ICHRFR01 Table

If an ICHRFR01 member already exists, add the class entries to the current source and proceed with the assembly and link edit steps.

b. Assemble the source.

When you assemble this table, the following MNOTE may be generated for a new class entry:

```
4,*** CLASS NAME DOES NOT CONTAIN NATIONAL CHARACTER    OR DIGIT IN    X
             FIRST FOUR POSITIONS ***
```

This is only a warning; it should be ignored.

c. Link edit the resulting object module, replacing the current ICHRFR01 load module.

4. To put the change into effect, IPL MVS.
5. Issue the following three commands for each new class, if appropriate:

```
SETROPTS CLASSACT(class)
SETROPTS GENERIC(class)   (if generic profiles will be used)
SETROPTS GENCMD(class)    (if generic profiles will be used)
```

For additional information about installing entries in the CDT and RTB, see the IBM *System Programming Library: RACF* manual.

Step 3: Creating RACF Security Profiles

Note: Before you define unique security profiles, you may need to define additional SAF resource classes to RACF. See "Step 2: (Optional) Adding Resource Classes to RACF" on page 155 for more information.

To protect resources, you can define security profiles to RACF and then customize the resource definition tables for each product to use those profiles.

User IDs that you intend to associate with these profiles have the following requirements:

- The user IDs for all users of windows-mode client products should be defined to RACF in each MVS system where these products are running. For each user, the ID must be the same for each MVS system.
- For each user, the password must be the same on all connected systems.

Note: If the release level of RACF on all connected systems is 1.9 or above, this requirement does not apply.

- User access authority to resources should be defined to RACF in a consistent manner in all MVS systems where MAINVIEW products are running.

Step 4: Specifying Profiles to Control Access to Product Resources

When you define RACF security profiles, you can use * (one asterisk) and ** (two consecutive asterisks) to represent one or more index levels in the profile (entity) name.

Most resource entity names are entirely variable and can be customized at any level. You can establish profiles that control access to systems, products, view tables, and view action commands associated with a specific product resource, as shown in the following examples.

Example 1: To prohibit the use of a resource universally, use the following RDEFINE command syntax:

```
RDEFINE FACILITY                    +
        BBM.resource.name           +
        UACC(NONE)                  +
        NOTIFY(user ID)
```

where

`FACILITY`	Is the name of the SAF resource class being used for this resource.
`BBM.`*resource.name*	Is the entity name of the resource; see the SERDEF detail views, SERDEFD or SERDEFE, for this value. These detail views are accessed through the SERDEF view by placing your cursor on the resource name and pressing ENTER.
`UACC(NONE)`	Is the RACF universal access to resource.
`NOTIFY(`*user ID*`)`	Is the user ID to notify if violations occur.

Example 2: To permit READ access to users in a particular group, specify the following command:

```
PERMIT  BBM.resource.name           +
        CLASS(FACILITY)             +
        ACCESS(READ)                +
        ID(group)
```

where

`BBM.`*resource.name*	Is the entity name of the resource; see the SERDEF detail views, SERDEFD or SERDEFE, for this value. These detail views are accessed through the SERDEF view by placing your cursor on the resource name and pressing ENTER.
`CLASS(FACILITY)`	Is the name of the SAF resource class being used for this resource.
`ACCESS(READ)`	Is the RACF access level being permitted (READ).
`ID(`*group*`)`	Is the group identity being granted READ access.

Example 3: To permit UPDATE access by a specific user, specify the following command:

```
PERMIT  BBM.resource.name          +
        CLASS(FACILITY)            +
        ACCESS(UPDATE)             +
        ID(user)
```

where

`BBM.`*resource.name*	Is the entity name of the SAF resource; see the SERDEF detail views, SERDEFD or SERDEFE, for this value. These detail views are accessed through the SERDEF view by placing your cursor on the resource name and pressing ENTER.
`CLASS(FACILITY)`	Is the name of the SAF resource class being used for this resource.
`ACCESS(UPDATE)`	Is the RACF access level being permitted (UPDATE).
`ID(`*user*`)`	Is the user ID being granted access.

Configuring CA-TOP SECRET

This section provides information about the administrative actions for CA-TOP SECRET that must be performed to support the MAINVIEW security interface. Security supports CA-TOP SECRET Release 4.2 and later.

Note: See Chapter 8, "Introduction to Enhanced Security" on page 131, for general information about the security functions. To define the security subsystem to CA-TOP SECRET:

1. Define a new CA-TOP SECRET Facility Matrix entry; see "Step 1: Defining a New CA-TOP SECRET Facility Matrix Entry" on page 161.
2. Define security attributes for started tasks; see "Step 2: Authorizing the CAS and PAS" on page 162.
3. Optionally, update the Resource Definition Table Record to define new resource classes; see "Step 3: (Optional) Adding a New SAF Resource Class" on page 163.
4. Define ownership of resources by prefix name; see "Step 4: Defining Ownership of Resources" on page 164.
5. Control access to resources permitting access to prefixed resources; see "Step 5: Controlling Access to Product Resources" on page 165.

Step 1: Defining a New CA-TOP SECRET Facility Matrix Entry

You must define a new entry (or redefine an existing entry) in your CA-TOP SECRET Facility Matrix to set the CA-TOP SECRET control options for MAINVIEW security interface processing.

To accomplish this requirement most easily, select one of the unused, predefined USER facilities provided by CA-TOP SECRET, change its name, and modify the security attributes according to the requirements in the list of statements below.

Include these statements in the TSSPARMS data set, in which the USER9 facility (for example) is configured:

Note: In the following list of statements, `USER9` and `BBI3` are examples only.

```
FACILITY(USER9=NAME=BBI3)     * Required
FACILITY(BBI3=PGM=BBM)        * Required
FACILITY(BBI3=MULTIUSER)      * Required
FACILITY(BBI3=NOABEND)        * Required
FACILITY(BBI3=ACTIVE)         * Required
FACILITY(BBI3=SIGN(M))        * Required
FACILITY(BBI3=TENV)           * Required
FACILITY(BBI3=NONPWR)         * Required
FACILITY(BBI3=NOTSOC)         * Required
FACILITY(BBI3=NOPROMPT)       * Required
FACILITY(BBI3=TYPE=CICS)      * Required
FACILITY(BBI3=NOMRO)          * Required
FACILITY(BBI3=FACMATRX=YES)   * Required
FACILITY(BBI3=EXTSEC=YES)     * Required
FACILITY(BBI3=XFCT=YES)       * Required
FACILITY(BBI3=DSNCHECK=YES)   * Required
FACILITY(BBI3=RES)            * Required
FACILITY(BBI3=MAXUSER=500)    * Default (3000) is excessive
FACILITY(BBI3=ASUBM)          * Recommended
FACILITY(BBI3=MODE=FAIL)      * Recommended
FACILITY(BBI3=WARNPW)         * Recommended
FACILITY(BBI3=DORMPW)         * Recommended
FACILITY(BBI3=SHRPRF)         * Recommended
FACILITY(BBI3=LUMSG)          * Recommended
FACILITY(BBI3=STMSG)          * Recommended
FACILITY(BBI3=LCFTRANS)       * Recommended
```

Note: In the above example, the following TSSPARMS statements required in Release 4.2 are obsolete in Release 4.3 and later:

```
FACILITY(BBI3=TENV)
FACILITY(BBI3=NOMRO)
```

Step 2: Authorizing the CAS and PAS

To define security attributes for the CAS and PAS started tasks, you must

1. Define ACIDs for the CAS and each PAS and associate them with the Facility Matrix entry established for use by BMC Software ESM products.
2. Associate the started task procedure names for the CAS (and each PAS, if run as a started task) with the appropriate ACIDs (either existing or newly defined).

If you run the CAS and MVS PAS as started tasks, you must associate the appropriate procedure names with a suitably authorized ACID, using the TSS ADDTO(STC) command. The ACID must be able to access the STC facility and must be authorized to access all data sets used within the address space. Each ACID is associated with an address space by the CA-TOP SECRET STC table.

Note: Appropriately authorized ACIDs **must** be assigned to the started task procedures that you use to run the CAS and any PAS, because the ACID's MASTFAC attribute must specify the name of a properly configured CA-TOP SECRET Facility Matrix entry.

If you do not assign a specific, properly configured ACID for the started task procedures, the default assigned by CA-TOP SECRET probably **will not** work correctly.

For additional information about connecting started task procedures to ACIDs and Facility Matrix entries, see the *CA-TOP SECRET TSS Command Functions Guide*.

To define started task ACIDs:

1. Define CAS and PAS ACIDs.

   The following example TSS command illustrates how to define an ACID for the CAS and associate the CAS with the proper Facility Matrix entry:

   ```
   TSS CREATE(BBMCAS) NAME('SYSA CAS') FACILITY(STC) +
   PASSWORD(NOPW,0) DEPT(deptacid) MASTFAC(BBI3)
   ```

   In this example, `BBMCAS` is the ACID that is being defined for use by the `SYSA CAS`. The name that was previously selected for the Facility Matrix entry to be used is `BBI3.` If PASs are run as started tasks, ACIDs must be established for them in the same way they are for the CAS. The same Facility Matrix entry may be used for a PAS as is used for the CAS. There is no need to define another one. For example:

   ```
   TSS CREATE(BBMPAS) NAME('SYSA PAS')   +
       FACILITY(STC) PASSWORD(NOPW,0)    +
       DEPT(deptacid) MASTFAC(BBI3)
   ```

2. Define the CAS and PAS as started tasks.

   Defining a started task to CA-TOP SECRET results in the association of that started task with a specified ACID. The following TSS command illustrates how to define the CAS procedure, with a name of BBICAS, to CA-TOP SECRET as a started task, which is to use the previously defined ACID of `BBMCAS`:

   ```
   TSS ADDTO(STC) PROC(BBICAS)   ACID(BBMCAS)
   ```

Note: If PASs are run as started tasks, they must be added to the STC table just as they are for the CAS. For example:

```
TSS ADDTO(STC) PROC(BBIPAS)   ACID(BBMPAS)
```

Step 3: (Optional) Adding a New SAF Resource Class

Skip this step if you plan to use the class name FACILITY.

To define new SAF resource classes to CA-TOP SECRET, you must update the CA-TOP SECRET resource definition table (RDT) record (reserved ACID).

Note: Because the MAINVIEW security interface can use any class name you specify, adding a new resource class may not be necessary. New SAF resource classes are required by your site only if you are unable or do not want to use class `FACILITY`, which is internally transformed by CA-TOP SECRET to `IBMFAC`.

The manner in which this is done is release-dependent. Here is an example for CA-TOP SECRET Release 4.3:

```
TSS ADDTO(RDT)  RESCLASS(class)            +
    RESCODE(3B) ATTR(PRIVPGM,LONG,GENERIC) +
    ACLST(NONE,READ,UPDATE,ALL)            +
    DEFACC(NONE)
```

where *class* is a new user-defined class name to be used by security. The choice of X’3B’ for the two-digit hexadecimal `RESCODE` is an example only. You must choose a resource code within the range permitted by CA-TOP SECRET (X’01’ through X’3F’ for Release 4.3), and it must not conflict with any previous choice you have made for another enterprise-defined resource class that has been added to the RDT.

The attributes LONG and GENERIC are required.

Another attribute you should consider for this resource class is NODEFPROT, because it causes CA-TOP SECRET to behave more like RACF with respect to this resource class; it is not required, however.

Other attributes (such as EXIT) may be set according to existing installation requirements, procedures, and practices.

The access levels shown, NONE, READ, UPDATE, and ALL, are also only examples. You may choose your own access level names.

Note: The default hexadecimal values associated with the access levels READ and UPDATE are the only values supported; you must ensure that your alternative access level names include these values.

The default access level of NONE is only an example. You may choose any default access level.

To control access to product resources, you must `ADD` the prefix of `BBM` to the resource class (that is, define ownership) and permit access to resources, by prefix name, that are by default in SAF class `FACILITY`.

Note: CA-TOP SECRET refers to internal SAF class `FACILITY` as `IBMFAC` externally. The MAINVIEW security interface can be customized to use a class other than `FACILITY` (that is, `IBMFAC`).

When you are using CA-TOP SECRET and you want to use SAF resource class `FACILITY`, use the standard CA-TOP SECRET RDT entry (class) of `IBMFAC` for the appropriate ADDTOs and PERMITs; for example:

```
TSS ADDTO(ownacid) IBMFAC(BBM)
```

When you are using CA-TOP SECRET and you do not want the SAF resource class `FACILITY` to be used, you need to customize the resource class definition table, member BBMTSP*nn* of the CAS security parameter library (DDname BBSECURE). For more information, see Chapter 12, "Resource Definitions" on page 185.

Note: Certain resources that use SAF class `FACILITY` cannot be customized.

Step 4: Defining Ownership of Resources

As with all CA-TOP SECRET resources, you must first define ownership of the resource name prefixes to CA-TOP SECRET by using the TSS ADDTO command. The following TSS commands perform this function:

```
TSS ADDTO(ownacid) class(BBM)
```

where

class Is the SAF resource class name selected.

`BBM` Is the high-level prefix of the resource names to be owned in the specified resource class name.

You **must** define ownership of the product resources to protect resources (that is, issue the `TSS PERMIT` command).

ACIDs that you intend to associate with these resources have the following requirements:

- The ACIDs for all users of MAINVIEW security interface-based products should be defined to CA-TOP SECRET in each MVS system that is used by the interface (see "Step 2: Authorizing the CAS and PAS" on page 162 for more information). For each user, the ACID must be the same for each MVS system.
- Each user's password must be the same on all connected systems.

  The CA-TOP SECRET database master encryption key also must be the same on all connected systems.

  Note: These requirements do not apply to recent maintenance levels of CA-TOP SECRET Release 4.3 and later.

- User access authority to product resources should be defined to CA-TOP SECRET in a consistent manner in all MVS systems used by the MAINVIEW security interface.

Before defining ownership of resources, you may need to add additional SAF resource classes to the CA-TOP SECRET RDT (see "Step 3: (Optional) Adding a New SAF Resource Class" on page 163 for more information). Once the resources are owned, you may enter `TSS PERMIT` commands to control access to those resources.

Step 5: Controlling Access to Product Resources

After a prefix has been added to the appropriate (owning) ACID to indicate that it is owned, the TSS PERMIT command can be used to permit end user access to resources with entity names beginning with the now-owned (defined) prefix.

Most resource entity names are entirely variable and can be customized at any level. You can establish `PERMITs` that control access to systems, products, view tables, and view action commands associated with a specific product resource, as shown in the following examples.

Example 1: To prohibit access to a resource universally, specify

```
TSS PERMIT(ALL) class(BBM.resource.name)              +
    ACCESS(NONE)
```

Example 2: To permit READ access by users connected to a profile, specify

```
TSS PERMIT(profile) class(BBM.resource.name)          +
    ACCESS(READ)
```

Example 3: To permit UPDATE access by the user whose ACID is BBMUSER, specify

```
TSS PERMIT(BBMUSER) class(BBM.resource.name)          +
    ACCESS(UPDATE)
```

Chapter 10. Class Definitions

Class definitions specify

- a class name transformation
- a prefix or suffix for resource entity names
- log options
- whether the class is active
- predefined authorization results
- access intent transformations
- CA-ACF2 or CA-TOP SECRET parameters

Class definitions are stored in BBMTSP*nn* members in the security parameter library. Refer to "Establishing Enhanced Security" on page 141 for details on this library and sharing a single library between CASs.

The following sections describe the Plex Manager views for managing class definitions.

Working with Class Definition Members

This section describes how to manage the class definition members in the security parameter library.

Displaying a List of Class Definition Members (SECDEFL)

To display a list of class definition members:

1. On the MAINVIEW Selection Menu, select Option P for Plex Manager.
2. On the COMMAND line,enter **SECDEFL** . The SECDEFL view is displayed, as shown in Figure 11.

```
15JUL2001 12:43:14 --------- MAINVIEW WINDOW INTERFACE (R4.0.02) --------------
COMMAND  ===>                                                SCROLL ===> PAGE
CURR WIN ===> 1        ALT WIN ===>
 W1 =SECDEFL===========SYSB=====*========15JUL2001==12:43:14====PLEXMGR===D===3
CMD Member Description
--- Suffix ------------
    00     All Security Class Definitions
    01     Production Security Class Definitions
    02     SysA Test Security Class Definition
```

Figure 11. SECDEFL View

To display a class definition, enter the S line command in the **CMD** field. The SECDEF view is displayed. SECDEF is described in "Displaying a Class (SECDEF)" on page 170.

For a description of any SECDEFL field, place your cursor on the field and press your HELP PF key or see "Default Class Definitions" on page 459.

Note: If the security parameter library does not yet contain a class definition member, the **Description** field shows the following message:

```
Empty member--Select to create
```

Select the empty member using the S line command, which displays the following message:

```
BBMYA923E The parameter member BBMTSP00 is missing
```

Disregard the message and press **Enter**. The SECDEF view is displayed with the default security classes.

Creating a Class Definition Member

Creating a new class definition member is useful if

- you need to change some of the security class parameters temporarily for a CAS
- CASs share a security parameter library, but one or more CASs require different class definitions

By creating a new class definition member in the security parameter library, you can retain your original definitions for use again or, in a shared security parameter library environment, provide more than one set of parameters for different system requirements.

To create a new class definition member:

1. Enter the SECDEFL command to display the SECDEFL view.
2. Review the list of member suffixes and choose a suffix that is not currently used.
3. On the COMMAND line, enter **SECDEF SUFFIX(*nn*)**, where *nn* is the suffix for the new member.
4. The following message is displayed:

   BBMYA923E The parameter member BBMTSP*nn* is missing

   Disregard the message and press **Enter** to display the new member with the default security classes.
5. On the COMMAND line, enter **EDIT** and change a definition, as described in "Dynamically Activating Class Changes" on page 175.
6. On the COMMAND line, enter **SAVE**.

Activating a New Class Definition Member

If you want the CAS to use a new class definition member at initialization, you must identify the new member suffix in the CASDEF view.

1. From the MAINVIEW Selection Menu, select Option P for Plex Manager.
1. On the COMMAND line, enter **CASDEF** to display the CASDEF view.
2. On the COMMAND line, enter the **EDIT** command to obtain an edit lock.
3. On the COMMAND line, enter the **CHAnge** command.
4. Change the **SecDef Suffix** field in the CHANGE CAS SYSTEM DEFINITION dialog to the two-digit value of the class definition member that you want the local CAS to use.
5. Press the END key to display the CASDEF view.
6. On the COMMAND line, enter the **SAVE** command to save the updated CAS definition in the BBPARM library.
7. On the COMMAND line, enter the **INStall** command to activate the CAS definition immediately for the local CAS to reference the new class definition member.

Deleting a Class Definition Member

To delete a class definition member from the security parameter library:

1. On the COMMAND line, enter SECDEFL to display the SECDEFL view.
2. On the COMMAND line, enter **EDIT**.
3. Type the DEL line command to the left of the member and press **Enter**.

Note: The member is deleted immediately. There is no confirmation panel. Use this command only when you are sure you want to delete a security parameter library member.

Working with Class Definitions

This section describes how to manage the class definitions in a class definition member.

Displaying a Class (SECDEF)

To display the classes in the current class definition member:

1. From the MAINVIEW Selection Menu, select Option P for Plex Manager.
2. Do one of the following:
   - Type **EZSEC** to display the EZSEC view, place your cursor on **Review Class Definitions**, and press **Enter**.

     or
   - On the COMMAND line, enter **SECDEF**.

The SECDEF view is displayed, as shown in Figure 12.

```
15JUL2001 12:43:40 --------- MAINVIEW WINDOW INTERFACE (R4.0.02) --------------
COMMAND  ===>                                                SCROLL ===> PAGE
CURR WIN ===> 1        ALT WIN ===>
>W1 =SECDEF============SYSB=====*========(00 BROWSE        )====PLEXMGR===D==76
CMD SecClass NextClas Act Description                              Prefix
--- -------- -------- --- ------------                              ------------
    $BBM     FACILITY YES BBI-3 Default Resource Class
    $BOOLEL           YES Top Secret Sample User-defined RDT Class
    $BOOLES           YES Top Secret Sample User-defined RDT Class
    acf2RDSN DATASET  YES Redirect ACF2 TYPE(DSN) to ordinary rule
    ABSTRACT          YES Top Secret Validate User Resource Access
    ACICSPCT          YES CICS Program Control Table; Started Txns
    APPL              YES Application Access
    BCICSPCT          YES CICS Group Resource Class for ACICSPCT
    CCICSCMD          YES CICS System Programmer Commands
    CHGPROP           YES Top Secret Cross-CPU change propagation
    CPSMOBJ           YES CPSM Discrete and generic resources
    CPSMXMP           YES CPSM Exemption resource names
    DASDVOL           YES Top Secret Validate DASD volumes access
    DASDVOLT          YES Top Secret Validate ANY DASD vol. access
    DATASET           YES Data Set (Entity name = DSNAME)
    DATASETT          YES Top Secret Validate ANY data set access
```

Figure 12. SECDEF View

Each line in the SECDEF view represents one class definition in the class definition member in the security parameter library.

All known classes for CA-ACF2, CA-TOP SECRET, and RACF are displayed in the SECDEF view.

To display the attributes of a class listed in the SECDEF view, position the cursor on the class to display and press **Enter**. The SECDEFD view is displayed as shown here.

```
27SEP2001  14:03:57 -------- MAINVIEW WINDOW INTERFACE (R4.0.02) --------------
COMMAND  ===>                                                  SCROLL ===> CSR
CURR WIN ===> 1        ALT WIN ===>
>W1 =SECDEF===SECDEFD==SJSB=====*========(00 BROWSE        )====PLEXMGR===D===1
    Class Name..... $BBM       Description.. BBI-3 Default Resource Class
    NextClass...... FACILITY   Active....... YES
    Common.........
     Suffix........            Prefix.......
     ResList.......            Maxl.........
     LogFail.......            LogAuth......
    Intent Xform...
     Execute.......            Alter........
     Read..........            Create.......
     Update........            Write........
     Control.......            Delete.......
    TopSecret......
     Class.........            PrivPgm......
     List..........            DefProt......
     FastAuth......            ResMask......
     Auth..........            ClassMask....
```

Figure 13. SECDEFD View

Changing a Class

Important

Do not change a class definition unless you want to use a class name other than FACILITY.

All MAINVIEW products that operate in windows mode use the class name $BBM, which is translated automatically by MAINVIEW to the class name FACILITY. The FACILITY class is known to CA-ACF2, CA-TOP SECRET, and RACF.

To change a class definition, perform the following steps on each system in your sysplex or multisystem environment:

1. Start the CAS for which you want to change a class definition. If the security parameter library is shared by all CASs, you need only start one CAS.
2. From the MAINVIEW Selection Menu, select Option 0 for Parameters and Options.
3. Specify the CAS for which you want to customize the member. After connecting to that CAS successfully, select Option P for Plex Manager.
4. On the COMMAND line, enter **SECDEF**.
5. On the COMMAND line, enter **EDIT** to obtain the edit lock for this member.
6. In the **CMD** field for the class that you want to change, enter the C line command and press **Enter**.

The CHANGE SECURITY CLASS DEFINITION dialog, shown in Figure 14, is displayed.

```
---------------------- CHANGE SECURITY CLASS DEFINITION -------------------
 COMMAND ===>

Class Name  ===  $BBM     Next ===> FACILITY Active ===> YES
Description ===> BBI-3 Default Resource Class
Common:
  Prefix   ===>                              Suffix ===>
  Reslist  ===>        Yes/No Maxlen  ===>        CDT/STD/LONG/nn
  Log Fail ===>        Log Auth ===>        Never / Allow
Intent Transformations :    Intent / Yes / No / Maybe
  EXECUTE ===>           CONTROL ===>           WRITE  ===>
  READ    ===>           ALTER   ===>           DELETE ===>
  UPDATE  ===>           CREATE  ===>
TSS:  - This section applies only to systems using Top Secret
  Class   ===>           List ===>
  Fauth   ===>      Auth    ===>      PrivPgm   ===>      Yes/No
  DefProt ===>      ResMask ===>      ClassMask ===>      Yes/No
ACF2:   This section applies only to systems using ACF2
  Rule    ===>       List   ===>
  Resdir  ===>       Auth   ===>        Yes/No

Press End to change the security class definition.
```

Figure 14. CHANGE SECURITY CLASS DEFINITION Dialog

7. In the **Next** field, specify the class you want to use.

   For a description of an attribute, press the HELP PF key or see Table 66 on page 461.

8. Press the END key to display the SECDEF view.

9. On the COMMAND line, type the **SAVE** command. The SECURITY CLASS DEFINITION dialog is displayed, as shown in Figure 15

```
-------------------------- SECURITY CLASS DEFINITION ----------------------
COMMAND ===>

Security Class Member Description:
  ===> Default Security Classes

Enter END to save the security class definition parameter member.
Enter CANCEL to leave without saving.
```

Figure 15. SECURITY CLASS DEFINITION Dialog

Add or change the member description as necessary. The description can be up to 30 characters. It is displayed in the **Description** field of the SECDEFL view.

10. Press the END key to save class definition.

The member is saved in the security parameter library for the local CAS or, in a shared environment, for all CASs. Either the SECDEF or SECDEFD view is displayed and the edit-mode status field on the window information line changes from `(00 EDIT MOD  )` to `(00 EDIT     )`. Edit mode is still active and all modifications are saved.

This definition will be activated the next time the CAS initializes or immediately with the INSTall command (see "Dynamically Activating Class Changes" on page 175).

To cancel your changes, type the CANcel command on the COMMAND line. The class definition member will remain the way it was when the edit lock was obtained or since the last SAVE command was used.

Adding a New Class

To add a new class to the current class definition member:

1. From the MAINVIEW Selection Menu, select Option P for Plex Manager.
2. On the COMMAND line, enter **SECDEF**.
3. On the COMMAND line, enter EDIT to obtain the edit lock for this member.
4. To create an empty class defintion, enter the ADD command on the COMMAND line.

   To use an existing class as a model, enter the A line command in the **CMD** field for that class and press **Enter**.

   The ADD SECURITY CLASS DEFINITION dialog is displayed, as shown in Figure 16..

```
------------------------ ADD SECURITY CLASS DEFINITION --------------------
COMMAND ===>

Class Name  ===>          Next ===>          Active ===>
Description ===>
Common:
  Prefix   ===>                              Suffix ===>
  Reslist  ===>        Yes/No Maxlen  ===>        CDT/STD/LONG/nn
  Log Fail ===>        Log Auth ===>        Never / Allow
Intent Transformations :    Intent / Yes / No / Maybe
  EXECUTE ===>           CONTROL ===>           WRITE  ===>
  READ    ===>           ALTER   ===>           DELETE ===>
  UPDATE  ===>           CREATE  ===>
TSS:  - This section applies only to systems using Top Secret
  Class   ===>           List ===>
  Fauth   ===>      Auth    ===>      PrivPgm   ===>      Yes/No
  DefProt ===>      ResMask ===>      ClassMask ===>      Yes/No
ACF2:   This section applies only to systems using ACF2
  Rule    ===>       List   ===>
  Resdir  ===>       Auth   ===>        Yes/No

Press End to change the security class definition.
```

Figure 16. ADD SECURITY CLASS DEFINITION Dialog

Provide the appropriate attributes for each security class.

For a description of each parameter, press the HELP PF key. Table 66 on page 461 also describes each parameter.

Press the END key to display the SECDEF view.

On the COMMAND line, enter **SAVE** to save your default class definition member (suffix of 00) in the security parameter library.

5. To activate these default security class parameters, enter **INStall** on the COMMAND line. If each CAS has a unique security parameter library, repeat Step 2 through Step 5 on page 174 for each CAS.

If all CASs share the same security parameter library, start the other CASs. They will automatically use the parameters you customized in the default (suffix 00) member.

Note: If any of the CASs are not using the new security parameters in a shared security parameter library environment, see "Activating a New Class Definition Member" on page 169 to ensure that the 00 member is defined to each CAS.

To cancel your changes, type the CANcel command on the COMMAND line. The class definition member in the security parameter library retains its original contents when the edit lock was obtained or since the last SAVE command was used.

Deleting a Class

To delete a class from a class definition member:

1. From the MAINVIEW Selection Menu, select Option P for Plex Manager.
2. On the COMMAND line, enter **SECDEF**.
3. On the COMMAND line, enter **EDIT** to obtain the edit lock for this member.
4. Enter the DEL line command in the **CMD** field for that class and press **Enter**.

The security class is marked for deletion and removed from the display.

Recovering a Deleted Class

To recover a security class that was deleted from a class definition with the DEL line command, use the UND line command. The UND command recovers a definition that was deleted as long as the SAVE command has not been entered since the DEL command was used.

1. From the MAINVIEW Selection Menu, select Option P for Plex Manager.
2. On the COMMAND line, enter **SECDEF**.
3. On the COMMAND line, enter **EDIT**.
4. Enter the following command on the COMMAND line:

   ```
   QPARm DELETED(*)
   ```

   This redisplays the classes marked for deletion.

5. Enter the UND line command to select the class name and press **Enter**.

Note: Undeleting a class definition also changes the **Deleted?** field in the SECDEFD view from `No` to `Yes`.

Dynamically Activating Class Changes

To activate your changes immediately for the local CAS without waiting until the CAS is recycled or for the next system IPL, use the INSTall primary command from either the SECDEF or the SECDEFD view. You do not have to be in edit mode to use this command. Since the SECDEFD view displays only one security class from a class definition, only that member is activated.

For a shared security parameter library, you must display the class definition member in SECDEF and enter the INSTall command for each CAS.

Note: The INSTall command does not update a class definition member. You must use the SAVE command to update the class definition, as described in "Changing a Class" on page 171.

Chapter 11. Parameter Definitions

Parameter definitions control how MAINVIEW security interacts with your ESM. They

- specifiy the ESM and its attributes
- identify the MAINVIEW CAS subsystem to the ESM
- specify how the MAINVIEW security interface identifies MAINVIEW TS end users to the ESM within product address spaces
- activate diagnostic services

Parameter definitions are stored in the BBMTSS*nn* members in the security parameter library. Refer to "Establishing Enhanced Security" on page 141 for details on this library and sharing a single library between CASs.

The following sections describe the Plex Manager views for managing parameter definitions.

Displaying a List of Parameter Definitions (SEPDEFL)

The SEPDEFL view displays a list of the members in the security parameter library for the local CAS. To display SEPDEFL:

1. On the MAINVIEW Selection Menu, select Option P for Plex Manager.
2. On the COMMAND line, enter **SEPDEFL**.

The SEPDEFL view is displayed, as shown in Figure 17.

```
15JUL2001 11:01:31 -------- MAINVIEW WINDOW INTERFACE (R4.0.02) ---------------
COMMAND  ===>                                                 SCROLL ===> PAGE
CURR WIN ===> 1        ALT WIN ===>
 W1 =SEPDEFL===========SYSC=====*========15JUL2001==11:01:30====PLEXMGR===D===2
CMD Member Description
--- Suffix ------------
    00     Test System Security Parms
    01     Secondary Security Parms
```

Figure 17. SEPDEFL View

The **Member Suffix** field displays *nn*, where *nn* is suffix of the BBMTSS*nn* member.

The first time you display this view, the **Description** field shows the following message:

```
Empty member--Select to create
```

Selecting an empty member displays the following message in the SEPDEFD view:

```
BBMYA819E The parameter member BBMTSS00 is missing
```

Press **Enter**; SEPDEFD shows the default security parameters.

Displaying a Parameter Definition (SEPDEF and SEPDEFD)

To display a parameter definition:

1. On the MAINVIEW Selection Menu, select Option P for Plex Manager.
2. Do one of the following:
   - Type **EZSEC** to display the EZSEC view, place your cursor on **Review Security Parms**, and press **Enter**.
   - Type **SEPDEFL** to display the SEPDEFL view and enter the S line command to the left of the parameter definition. The SEPDEFD view is displayed.
   - On the COMMAND line of a Plex Manager view, enter the following command:

SEPDEF SUFFIX(*nn*)

where *nn* is the two-digit suffix of the security parameter library member you want to display. The SEPDEF view is displayed.

The only difference between SEPDEF and SEPDEFD is the method by which you access them (by selection list or command); they display identical infomation, as shown here:

```
15JUL2001  09:06:22 --------- MAINVIEW WINDOW INTERFACE (R4.0.02) -------------
COMMAND  ===>                                                 SCROLL ===> PAGE
CURR WIN ===> 1        ALT WIN ===>
>W1 =SEPDEFD===========SYSC=====*========(00 BROWSE        )====PLEXMGR=======1
    ESM Type....... AUTO     Base PRODUCT. BBI3
    ESM Attributes.
     EntityX....... YES      TSS PrivPgm.. STD
     DSType........ YES      TSS Messages. ALL
     ACF2 Messages. ALL
    SubSystem Id...
     Subsys Id..... SSID     Applid....... SSID
     ReqStor....... ASIS     Session Type. NONE
    End User Id....
     ESM Userid.... ACCEPT   Dflt Userid.. NONE
     Account Info.. ALLOW    Pgmr name.... ALLOW
     Dflt AcctInfo. EXTERNAL Acct Info Val *NONE*
     GROUP Inherit. ALLOW
    Diagnostics....
     Trace Value... OFF      Restart Limit   3
     Window Msgs... NONSAFE  Restart Time.  60
    Modification Id          Member Suffix 00
     UpdSystem..... SYSC     UpdTime...... 10:11:00
```

Figure 18. SEPDEFD View

Changing a Parameter Definition

Important

You do not need to change a parameter definition except for the following reasons:

- You have both CA-ACF2 and RACF and want to use RACF.
- You use the RACF GROUP feature, and do not want it inherited on a connected system. In this case, you must spsecify `IGNORE` for the `GROUP Inherit` option on the `CHANGE SECURITY PARAMETERS.`
- You use a security system other than RACF, CA-ACF2, or CA-Top Secret.

To change a parameter definition, your user ID must be authorized to update the security parameter library for each CAS on each MVS image.

To change the parameter definition for any of the reasons listed above:

1. Display the SEPDEF or SEPDEFD view using one of the methods described in "Displaying a Parameter Definition (SEPDEF and SEPDEFD)" on page 178.

2. Enter the EDIT command on the COMMAND line of the SEPDEF or SEPDEFD view. This locks the parameter definition and prevents others from updating it. The edit-mode status field on the window information line changes from `(00 BROWSE  )` to `(00 EDIT )`.

3. Enter either **`CHAnge`** on the COMMAND line or the CH line command next to the first row of data.

The CHANGE SECURITY PARAMETERS dialog is displayed, as shown in Figure 19.

```
------------------------- CHANGE SECURITY PARAMETERS ----------------------
COMMAND ===>

ESM Type           ===> AUTO
Base PRODUCT       ===> BBI3
ESM Attributes:
 Support EntityX   ===> YES         TSS Priv Program   ===> STD
 Support DSType=M  ===> YES         Display TSS Msgs   ===> ALL
 Display ACF2 Msgs ===> ALL
Subsystem Identification:
 Subsys ID         ===> SSID        Applid             ===> SSID
 Reqstor           ===> ASIS        Session type       ===> NONE
End User Identification:
 ESM Userid        ===> ACCEPT      Default Userid     ===> NONE
 Programmer name   ===> ALLOW       GROUP Inherit      ===> ALLOW
 Accouting Info    ===> ALLOW
  Default ===> EXTERNAL
Diagnostics and Trace:
 Security traces   ===> OFF         Security restart   ===> 3      times
 Window messages   ===> NONSAFE                   in   ===> 60     minutes

Press END to change the Security parms; CANCEL to leave without changing.
```

Figure 19. CHANGE SECURITY PARAMETERS Dialog

Overtype the parameters as necessary.

For a description of a parameter, position your cursor on the parameter field and press the HELP PF key (or see Table 65 on page 451).

You can cancel your changes at any time by entering CANcel on the COMMAND line. The current parameter definition is reinstated to its original contents when the edit mode was requested or since the last SAVE command was entered.

When your changes are complete, press the END key to return to the SEPDEF or SEPDEFD view.

Note: If you use the RACF GROUP feature, and do not want it inherited on a connected system, specify NO in the **GROUP Inherit** field on the CHANGE SECURITY PARAMETERS dialog.

To save your change, enter the SAVE command on the COMMAND line of either the SEPDEF or SEPDEFD view while in edit mode. The SECURITY PARAMETERS DEFINITION dialog, shown in Figure 20, is displayed.

```
--------------------- SECURITY PARAMETERS DEFINITION -------------------
COMMAND ===>

Security Parameters Member Description:
  ===>

Enter END to save the security parameter definition member.
Enter CANCEL to leave without saving.
```

Figure 20. SECURITY PARAMETERS DEFINITION Dialog

If you are saving changes to an existing parameter definition, the previously defined description is shown. If you are creating a new parameter definition, this dialog appears with a blank **Member Description** field. The description can be changed and can be up to 30 characters in length. It is used in the **Description** field of the SECDEFL view.

Press the END key to save all your changes for this parameter definition as a member of the security parameter library. The member is saved in the security parameter library for the local CAS or, in a shared environment, for all CASs.

To make the parameter definition member known to the local CAS, see "Activating a Parameter Definition" on page 183. This definition is activated the next time the CAS initializes.

Creating a New Parameter Definition

To create a parameter definition, your user ID must be authorized to update the security parameter library for each CAS on each MVS system.

Use the following procedure to create a new parameter definition member:

1. Start MAINVIEW.
2. On the MAINVIEW Selection Menu, select Option P for Plex Manager. The PLEXOVER view is displayed.
3. On the COMMAND line, enter **`SEPDEF SUFFIX(`*`nn`*`)`** , where *nn* is the suffix for the BBMTSS*nn* member you want to create. Disregard the following message:

   `BBMYA819E The parameter member BBMTSS`*`nn`*` is missing`

   Press **Enter** to display the SEPDEF view with the security parameters defined in the default member, BBMTSS00.
4. On the COMMAND line, enter **`EDIT`** to obtain the edit lock for this member.
5. On the COMMAND line, enter **`CHAnge`** to display the CHANGE SECURITY PARAMETERS dialog, as shown in Figure 19 on page 180.
6. Enter the appropriate information for each parameter that you want to change. For a description of the parameters, press the HELP PF key or see Table 65 on page 451.
7. Press the END key to return to the SEPDEF view.
8. On the COMMAND line, enter **`SAVE`** to save the changes. The SECURITY PARAMETERS DEFINITION dialog is displayed. Type a description of the member in the **Description** field and press the END key to save the member. The new BBMTSS*nn* member will be saved in the security parameter library.
9. Follow the instructions in "Activating a Parameter Definition" on page 183 to associate the new parameter definition member to the CAS.

Activating a Parameter Definition

BBMTSS00 is the default parameter definition member in the security parameter library for a CAS. If you changed BBMTSS00, your changes will become effective when the CAS is recycled.

However, if you created a BBMTSS*nn* member with a suffix different from the default suffix of 00, you must associate the parameter definition suffix with the CAS, as described below. For example, if you created BBMTSS99, you must associate the suffix 99 to the CAS.

1. Display the CASDEF view.
2. Enter the EDIT command to obtain an edit lock.
3. Enter the CHA command to the left of the CAS definition you want to change.
4. Change the **SepDef Suffix** field on the CHANGE CAS SYSTEM DEFINITION dialog to the two-digit suffix of the parameter definition member you want the CAS to use.
5. Press the END key to return to the CASDEF view.
6. Enter the SAVE command on the COMMAND line to save the updated CAS definition in the BBPARM library.
7. Recycle the CAS.

Deleting a Parameter Definition

Note: When deleting a parameter definition, no confirmation panel is displayed. Use the DELete command only when you are sure you want to delete a security parameter library member.

To delete a parameter definition:

1. On the MAINVIEW Selection Menu, select Option P for Plex Manager.
2. On the COMMAND line, enter **SEPDEFL**.
3. In the SEPDEFL view, locate the parameter definition.
4. Enter the DEL line command to the left of the parameter definition.

Chapter 12. Resource Definitions

This chapter assumes that you have read Chapter 8, “Introduction to Enhanced Security”.

Before You Begin

Perform the following steps before you begin customizing your resource definition members:

1. Determine if you even need to create a resource definition member.

   If your ESM can work with the MAINVIEW security interface using default security resource parameters as distributed, you do not need to create a new definition. Or, your ESM may require only a few changes to some of the attributes for some of the resources.

2. Ensure that your user ID is authorized to access each CAS on each MVS.

3. Ensure that your user ID is authorized to access the security parameter library for each CAS on each MVS.

4. Optionally, determine the resource class and entity names for resources already known to your ESM if these resources have the proper security attributes you want to use to control access to resources.

5. Ensure that the CAS and each PAS are properly authorized for your ESM, as described in Chapter 9, “Configuring Your ESM for Enhanced Security”.

Working with Resource Definition Members

This section describes how to manage resource definition members in the security parameter library.

Displaying a List of Members using the SERDEFL View

To display a list of resource definition members in the security parameter library:

1. From the MAINVIEW Selection Menu, select the product for which you want to display the members.
2. On the COMMAND line, enter **SERDEFL**.

The SERDEFL view is displayed. A sample SERDEFL for Plex Manager is displayed in Figure 21.

```
15JUL2001 18:38:51 ---------- MAINVIEW WINDOW INTERFACE (R4.0.02) -------------
COMMAND  ===>                                                  SCROLL ===> PAGE
CURR WIN ===> 1        ALT WIN ===>
 W1 =SERDEFL===========SYSB=====*========15JUL2001==18:38:51====PLEXMGR===D===2
CMD Product  Member Description
--- -------- Suffix ------------
    COMMON   00     Common Resources
    PLEXMGR  00     Plex Manager Resources
```

Figure 21. SERDEFL View in Plex Manager

Use the SERDEFL view to

- select a member for display in the SERDEF view
- delete a resource definition member from the security parameter library, as described in "Deleting a Member" on page 188

To display help for any SERDEFL field, place your cursor on the field and press your HELP PF key.

Creating a New Resource Definition Member

You may need to change some of the security resource parameters temporarily for a CAS or, for a shared security parameter library environment, you may have one or more CASs that require different security resource parameters. By creating a new resource definition member in the security parameter library, you can retain your original parameters for use again or, in a shared security parameter library environment, provide more than one set of parameters for different system requirements.

To create a new resource definition member in the security parameter library, use the following command:

```
SERDEF SUFFIX(nn)
```

where *nn* is a two-digit numeric suffix (00 to 99) identifying the new member. The suffix must not be in use already (use the SERDEFL view to display the suffixes already used by existing members).

The SERDEF view is displayed.

To make the new resource definition member known to the local CAS, see:

- "Activating a New Member for Common Resources"
- "Activating a New Member for Product Resources"

Activating a New Member for Common Resources

To activate a resource definition member of the security parameter library for the local CAS to use at initialization, the member needs to be identified to the CAS. If you updated the default (suffix 00) member, you do not need to change the CAS definition, as described below.

1. From Plex Manager, display the CASDEF view.
2. On the COMMAND line, enter **`EDIT`** to obtain the edit lock.
3. On the COMMAND line, enter **`CHAnge`**.
4. Change the **Common Serdef** field in the CHANGE CAS SYSTEM DEFINITION dialog to the two-digit value of the resource definition member you want the local CAS to use for common MAINVIEW resources.
5. Press the END key to display the CASDEF view.
6. On the COMMAND line, enter **`SAVE`** to save the updated CAS definition in the BBPARM library.
7. On the COMMAND line, enter **`INStall`** to activate the CAS definition immediately for the local CAS to reference the new resource definition member for common MAINVIEW resources.

Activating a New Member for Product Resources

To activate a new resource definition member of the security parameter library for a product, the target definition for that product must reference the new resource definition member.

To verify or update the resource definition being used by a product:

1. From Plex Manager, display the CASDEF view.
2. Select the CAS for the product with your cursor and press **Enter** to display the CASDEFD view.
3. Review the **TgtDef Suffix in the Parmlib Suffixes** section of this view.
4. Display the TGTDEFL view in Plex Manager, as described in the *MAINVIEW Administration Guide*.
5. Select the member that has the same suffix as the CASDEFD **TgtDef Suffix** field to display the TGTDEF view.

6. Scan the list of product targets to identify the target that is to reference the new resource definition.
7. Select the CAS for the product with your cursor and press **Enter** to display the TGTDEFD view.
8. Verify the suffix value in the **SerDef Suffix** field of the **Security Info** section in TGTDEFD.

   If this value is the same as the new resource definition member, the target definition does not need to be edited. If this value is not the same as the new resource definition member, edit the target definition to specify the suffix of the new member.
9. Enter the SAVE command to save the target definition in the BBPARM library.
10. Recycle the CAS and the PAS, as described in the *MAINVIEW Administration Guide*.

Deleting a Member

To delete a resource definition member:

1. On the COMMAND line of the SERDEFL view, enter **`EDIT`**.
2. Select the definition that you want to remove from the security parameter library with the DEL line command.

No confirmation panel is displayed when you delete a resource definition member. Use this command only when you are sure that you want to delete a security parameter library member.

Working with Resource Definitions

The views for managing resource definitions are as follows:

EZSECRES Is an extension of EZSEC that allows you to change the context or product before displaying product resources.

SERDEFP Lists the active products for the current context when hyperlinking from EZSECRES.

SERDEFC Lists the active targets for the product selected by hyperlinking from SERDEFP when hyperlinking from EZSECRES.

SERDEFOV Displays group resource definitions categories of resources for the current product and context.

SERDEFEX Lists the components of the category selected by hyperlinking from the +++ value in the **Exp** field in SERDEFOV.

SERDEFL Lists all the resource definition members. You can select a member for display or delete a member.

SERDEF Displays both group and individual resource definitions. Use this view to create, change, enable, or disable a resource definition.

On the EZSEC view, hyperlink from the **Common Resources** field to display the SERDEFOV view, as shown in Figure 22.

```
04JAN2002  13:40:19 --------- MAINVIEW WINDOW INTERFACE (R4.0.02) -------------
COMMAND  ===>                                                SCROLL ===> CSR
CURR WIN ===> 1        ALT WIN ===>
>W1 =SERDEFOV==========CXTSTJ===*========(00 BROWSE        )====PLEXMGR===D==12
CMD Description                              Enab Exp Change Comment
--- ------------                             ---- --- --------------
    Default - Table Data                     Yes  +++
    Default - Any Table Actions              Yes  +++
    Default - Alter Data Set                 No   +++
    Default - Specific Table Actions         Yes  +++
    Any Action (COMMON Views)                Yes  N/A
    Global - Connect to CAS                  Yes  N/A
    Global - Attach Product Service Point    Yes  N/A
    Global - Determine trusted status        No   N/A
    Global - Access a Product                Yes  N/A
    Global - Set Threshold - Save Central    Yes  N/A
    Enter ASU Mode                           Yes  N/A
    Customize a View                         Yes  N/A
```

Figure 22. SERDEFOV View

The SERDEFOV view lists each resource definition for the current context and product and indicates whether it is enabled.

Three plus signs (+++) in the **Exp** field indicate a default resource definition, which controls several individual resource definitions. If you change, enable, or disable a default resource definition, all the individual resource definitions that reference the default definition are changed, enabled, or disabled.

To display the individual resource definitions in a group, position the cursor on the +++ in the **Exp** field and press **Enter**. The SERDEFEX view is displayed, as shown in Figure 23.

```
04JAN2002  13:42:20 --------- MAINVIEW WINDOW INTERFACE (R4.0.02) -------------
COMMAND  ===>                                                SCROLL ===> CSR
CURR WIN ===> 1        ALT WIN ===>
>W1 =SERDEFOV=SERDEFEX=CXTSTJ===*========(00 BROWSE        )====PLEXMGR===D===7
CMD Description                              Enab Change Comment
--- ------------                             ---- --------------
    Menu - Table Data                        No
    Screens - Table Data                     No
    Views - Table Data                       No
    Hist Data Set List - Table Data          Yes
    Security Resources - Table Data          Yes
    SecResource List - Table Data            Yes
    Diagmsg - Table Data                     Yes
```

Figure 23. SERDEFEX View

You can browse, enable, disable, and change resource definitions using the SERDEFOV and SERDEFEX views, as explained in the following sections.

Browsing a Resource Definition

To display a resource definition in browse mode from the SERDEFOV or SERDEFEX view, position the cursor on the **Description** field and press **Enter**. The attributes of the resource definition are displayed by the SERDEFE view.

```
04JAN2002  13:44:08 --------- MAINVIEW WINDOW INTERFACE (R4.0.02) -------------
COMMAND  ===>                                                SCROLL ===> CSR
CURR WIN ===> 1        ALT WIN ===>
>W1 =SERDEFOV=SERDEFE==CXTSTJ===*========(00 BROWSE        )====PLEXMGR===D===1
    Res Key..... BBC3X100     Desc..... Menu - Table Data
     Enabled.... No           Comment.. *Unchanged*
                              Type..... VIEW
    ESM Info---.
     Class...... $BBM         Entity... BBM.&PRODUCT.&CONTEXT.&INTTABLE.OD
     VolSer..... *NONE*       Intent... READ
     LogAuth.... Allow        LogFail.. Allow
    Substitution Values
     IntTable... MX100        ExtTable. @Menu
     IntAction.. VIEWTAB      ExtAction VIEW
     IntActTab.. BBMTH0P0     Product.. COMMON
     Parms?..... No           Fields?.. Yes
    Update Info.              Mem Suff. 00
     UpdSystem.. *NONE*       UpdTime.. 13:41:04
     UpdUser.... *NONE*       UpdDate.. 04JAN2000
    Res Version.
     Version.... 3            Release.. 2
                              ModLevel. 0
```

Figure 24. SERDEFE View

The window information line indicates that you are in `BROWSE` mode.

For an explanation of any field in this view, place your cursor on the field and press your HELP PF key. Use PF3 to return to previous view.

The SERDEF view displays the entity name for the resource in the **Entity** field. The variable portions of the entity name are symbolics, which begin with an ampersand. The values that are substituted for those symbolics are displayed in the **Substitution Values** field. When creating a rule, profile, or permit to control access to a resource, the substitued values (or generic values) must be specified in the entity name, not the symbolics.

Enabling a Resource Definition

To enable a resource definition from the SERDEFOV or SERDEFEX view:

1. On the COMMAND line, enter **`EDIT`** to obtain an edit lock.
2. Type the E line command to the left of the resource definition you want to enable and press **Enter**.
3. On the COMMAND line, enter **`SAVE`** to save the changes to the BBSECURE member.

Once the resource definition is enabled, access authorization requests can be made to your ESM for that resource.

Disabling a Resource Definition

To disable a resource definition from the SERDEFOV or SERDEFEX view:

1. On the COMMAND line, enter **`EDIT`** to obtain an edit lock.
2. Type the DIS line command to the left of the resource definition that you want to enable and press **Enter**.
3. On the COMMAND line, enter **`SAVE`** to save the changes to the BBSECURE member.

Changing a Resource Definition

To change the class, entity name, access intent, and log options of a resource definition using the SERDEFOV or SERDEFEX view:

1. On the COMMAND line, enter **`EDIT`** to obtain the edit lock for this member.
2. Type the C line command to the left of the resource definition that you want to enable and press **Enter**.

   The CHANGE RESOURCE AUTHORIZATION DEFINITION dialog, shown in Figure 25 on page 192, is displayed.

```
------------------ CHANGE RESOURCE AUTHORIZATION DEFINITION ---------------
COMMAND ===>

Authorize ===  CAS Definitions - Table Data
Product   ===  PLEXMGR          Type             ===  VIEW
Object    ===  CasDefn          Internal Object  ===  BBMTH0P0
Action    ===  VIEW             Internal Action  ===  VIEWTAB
Fields    ===  Y                Status           ===  Enabled
Parms     ===                  -
          ===                  -
          ===                  -
          ===                  -

Class   ===> $BBM
EntName ===> BBM.&PRODUCT.&CONTEXT.&INTTABLE.OD
        ===>
        ===>
Intent  ===> READ
LogAuth ===> A        LogFail ===> A         (A - Allow, N - Never)
Comment ===> TEST

Press End to change the resource authorization definition.
```

Figure 25. CHANGE RESOURCE AUTHORIZATION DEFINITION Dialog

You can change the entity name, class name, access intent, logging attributes, and comment.

3. Specify the appropriate attributes for each parameter you want to change.

   You can use the CANcel primary command at any time.

   For a description of a parameter, press the HELP PF key.

4. Press the END key to return to the SERDEF view.

5. On the COMMAND line, enter **SAVE** to save your default resource definition member (suffix of 00) in the security parameter library.

6. Recycle the CAS, and the PAS if necessary, to activate your changes.

7. If each CAS and PAS has a unique security parameter library, repeat these steps for each appropriate CAS and product PAS.

   If all CASs and PASs share the same security parameter library, start the other CASs and PASs. They will automatically use the definitions you customized in the default member (suffix 00).

   Note: If any of the CASs or PASs are not using the new resource definition in a shared security parameter library environment:

   - See "Activating a New Member for Common Resources" on page 187 to ensure that the 00 member is defined to each CAS for common resources.

   - See "Activating a New Member for Product Resources" on page 187 to ensure that the 00 member is defined to each CAS for product-specific resources.

Once you have changed a resource definition, you can

- cancel your changes with the CANcel primary command, as described in "Canceling Resource Definition Changes"
- save the resource definition changes in the security parameter library member using the SAVE primary command, as described in "Saving a Resource Definition" on page 193

Canceling Resource Definition Changes

To cancel changes that you made in edit mode since the last time SAVE was entered, enter CANcel on the COMMAND line of any of the security views.

If you use CANcel when the CHANGE RESOURCE AUTHORIZATION DEFINITION dialog is displayed, the SERDEF view appears and the edit lock is still active.

If you use CANcel when the SERDEF, SERDEFE, or SERDEFD view is displayed, the edit-mode status field on the window information line changes from `EDIT` to `BROWSE` to indicate that the edit lock is no longer active.

The resource definition member in the security parameter library retains its original contents when the edit lock was obtained or since the last SAVE command was used.

Saving a Resource Definition

To save changes to a resource definition, enter **`SAVE`** on the COMMAND line of either the SERDEF or SERDEFE/SERDEFD view in edit mode. The following dialog is displayed:

```
---------------- SECURITY RESOURCE DEFINITION PARAMETER MEMBER ------------
COMMAND ===>

Security Resource Member Description:
  ===> Plex Manager Resources

Enter END to save the resource definition parameter member.
Enter CANCEL to leave without saving.
```

Figure 26. SECURITY RESOURCE DEFINITION PARAMETER MEMBER Dialog

If you are saving changes to an existing resource definition, the previously defined description is shown. If you are saving a new resource definition, the **Member Description** field is blank. The description can be changed and can be up to 30 characters in length. It is used in the **Description** field of the SERDEFL view.

Pressing your END key saves all your changes for this resource definition as a member of the security parameter library. The member is saved in the security parameter library for the local CAS or, in a shared environment, for all CASs. To make the resource definition member known to the local CAS, see

- "Activating a New Member for Common Resources" on page 187
- "Activating a New Member for Product Resources" on page 187

Chapter 13. Protecting the MAINVIEW Security Interface

To control unauthorized changes to your security environment, you must restrict access to resources that protect the MAINVIEW security interface. To do this, you should define a permit, profile, or rule to prohibit universal access to the views used to implement and maintain security parameter and resource access definitions. By not allowing users to access these views, you effectively prevent unauthorized changes from being made.

To restrict access to security views:

1. Access the COMMON resource member from the Plex Manager SERDEFL view and secure the following resources:
   - `Security Resources - Table Data` (for SERDEF, SERDEFD, and SERDEFE views)
   - `SecResource List - Table Data` (for SERDEFL view)
2. Access the PLEXMGR resource member from the Plex Manager SERDEFL view and secure the following resources:
   - `SecDef Security Class - Table Data` (for SECDEF and SECDEFD views)
   - `SecDef List - Table Data` (for SECDEFL view)
   - `SecParm Definitions - Table Data` (for SEPDEF and SEPDEFD views)
   - `SecParm Def List - Table Data` (for SEPDEFL view)

Chapter 14. Resource Definitions Listed by Product

Each MAINVIEW product is shipped with resource defintions for

- resources common to all MAINVIEW products
- resources specific to a product, such as data accessed by views and forms, commands (product or view actions), and line commands (actions against objects or elements displayed in a view)

Protected resources are identified to your ESM by a resource name.

The SERDEFL view lists resource definition members that reside in a security parameter library, called BBSECURE by default. Selecting a definition from SERDEFL shows a description of each resource as modified, if necessary, in that definition in the SERDEF view. The MAINVIEW security interface uses the information from this view to build the authorization request it makes to your ESM. These authorization requests for common and product-specific resources are shown in the following tables by

- type of default resource viewed with SERDEF
- type of authorization request passed to your ESM

Common MAINVIEW Resources

To disable, enable, or customize resource access authorization requests to your ESM for a common resource used by all MAINVIEW products:

1. Display the SERDEFL view in Plex Manager, as described in "Displaying a List of Members using the SERDEFL View" on page 186.
2. Select the `COMMON` resource definition.

To enable or disable security for all common resources, you only need to disable or enable all of the following high-level resources, as described in "Disabling a Resource Definition" on page 191.

- Default - Table Data
- Default - Any Table Actions
- Default - Alter Data Set
- Default - Specific Table Actions
- Any Action (Common Views)
- Global - Connect to CAS
- Global - Attach Product Service Point
- Global - Determine trusted status
- Global - Access a Product
- Global - Set Threshold - Save Central
- Enter ASU Mode
- Customize a View

Authorization requests for resources common to MAINVIEW products are built from the default entity name for the `COMMON` resource definition as shown in Table 14 on page 198. For a description of how the symbolics are used, see page 133.

Table 14. Resource Definitions Common to All MAINVIEW Products

Resource name in SERDEF view	Resource definition and considerations
Default - Table Data	Can the user access data for a view in the current product? This default resource controls a subset of similar individual resources. Enabling, disabling, or changing this resource automatically enables, disables, or changes all resources with the following entity name: **Default Entity Name:** BBM.&PRODUCT.&CONTEXT.&INTTABLE.OD **Entity Name after Substitution:** BBM.*productid.targetid.tableid.*OD Specific resources with this same default entity name can be enabled, disabled, or changed on an individual basis.
Default - Any Table Actions	Can the user enter a view action in a view in the current product? This default resource controls a subset of similar individual resources. Enabling, disabling, or changing this resource automatically enables, disables, or changes all resources with the following entity name: **Default Entity Name:** BBM.&PRODUCT.&CONTEXT.&INTTABLE.AO **Entity Name after Substitution:** BBM.*productid.targetid.tableid.*AO Specific resources with this same default entity name can be enabled, disabled, or changed on an individual basis.
Default - Alter Data Set	Can the user access a data set? **Note:** This resource is distributed as a disabled, rather than an enabled, security call because the security check is done, by default, at a more precise level through the following common resources: •Default - Any Table Actions •Default - Specific Table Actions •Security Resources - Action - Edit •SecResource List - Action - Delete This default resource controls a subset of similar individual resources. Enabling, disabling, or changing this resource automatically enables, disables, or changes all resources with the following entity name: **Class Name:** DATASET **Entity Name:** &DSN Specific resources with this same default entity name can be enabled, disabled, or changed on an individual basis.
Default - Set Threshold - Alter Data Set	Can the user access the data set containing threshold definitions? **Note:** This resource is distributed as a disabled, rather than an enabled, security call because the security check is done, by default, through the Customize a View view. **Class Name:** DATASET **Entity Name:** &DSN

Table 14. Resource Definitions Common to All MAINVIEW Products (Continued)

Resource name in SERDEF view	**Resource definition and considerations**
Default - Specific Table Actions	Can the user enter specific view actions in the DIAGMSG, SERDEFL, or SERDEF views? This default resource controls a subset of similar individual resources. Enabling, disabling, or changing this resource automatically enables, disables, or changes all resources with the following entity name: **Default Entity Name:** BBM.&PRODUCT.&CONTEXT.&INTTABLE.&INTACTION.OA **Entity Name after Substitution:** BBM.*productid.targetid.tableid.actionid.*OA Specific resources with this same default entity name can be enabled, disabled, or changed on an individual basis.
Any Action (Common Views)	Can the user enter view actions in the VIEWS or SCREENS views in the current product? **Default Entity Name:** BBM.&PRODUCT.&CONTEXT.COMMON.AA **Entity Name after Substitution:** BBM.*productid.targetid.*COMMON.AA
Global - Connect to CAS	Can the user connect to a CAS? **Default Entity Name:** BBM.&SSID.CN **Entity Name after Substitution:** BBM.*ssid.*CN
Global - Attach Product Service Point	Is this address space allowed to define itself as a product? **Default Entity Name:** BBM.&SYSTEM.&PRODUCT.&CONTEXT.TC **Entity Name after Substitution:** BBM.*systemid.productid.targetid.*TC

Table 14. Resource Definitions Common to All MAINVIEW Products (Continued)

Resource name in SERDEF view	Resource definition and considerations
Global - Determine trusted status	Is the remote PAS a trusted system? Any user in any address space in a system, whether or not they are previously connected to a CAS, can request data, services, or both from certain products when an appropriate interface is provided. In most circumstances, the system's external security manager (ESM) authorizes requested access to these product resources. This resource definition is used by products to determine if it is permitted, under certain, well-defined circumstances, to grant access to data, services or both to users signed on to a trusted system without specifically authorizing such access to each user. The distributed default is disabled; all PASs on all systems are trusted. This is usually the case in the majority of instances where the only service points available to a given user are just those on interconnected, trusted systems controlled by a single organization. In these instances, any user in any address space on any system can access only certain product resources (those subject to the trusted system origination test) without having to explicitly sign on to the product or be individually authorized for access. This resource definition can be enabled on a system where there are remote systems (targets) defined in the sysplex that are not trusted. Each remote PAS's trusted status is determined once at each local system. If the remote PAS's user ID has access to this resource on the local system, it is trusted. Any user signed on to a nontrusted system is handled in the usual way rather than the trusted system “fast path” exclusion from normal security system authorization. A nontrusted system user requesting access to certain product resources has an ESM security environment created for them locally. It must then be determined if the requesting user has the right to be granted access to the data or services provided by the product under well-defined circumstances. **Default Entity Name:** BBM.&SYSTEM.&PRODUCT.&CONTEXT.TS **Entity Name after Substitution:** BBM.*systemid.productid.targetid.*TS
Global - Access a Product	Can the user access this product on this system? **Default Entity Name:** BBM.&SYSTEM.&PRODUCT.&CONTEXT.TA **Entity Name after Substitution:** BBM.*systemid.productid.targetid.*TA
Global - Set Threshold - Save Central	Can the user save a threshold to a central place? **Default Entity Name:** BBM.&SYSTEM.&PRODUCT.&CONTEXT.TH **Entity Name after Substitution:** BBM.*systemid.productid.targetid.*TH
Enter ASU Mode	Can the user enter the ASU command to place that terminal session in automatic update mode? **Default Entity Name:** BBM.COMMON.ASU.PA
Customize a View	Can the user enter the CUSTom command to access view customization in any product? **Default Entity Name:** BBM.COMMON.CUSTOM.PA

Table 14. Resource Definitions Common to All MAINVIEW Products (Continued)

Resource name in SERDEF view	Resource definition and considerations
Diagmsg Table Data	Can the user access the DIAGMSG view in the current product? **Default Entity Name:** BBM.&PRODUCT.&CONTEXT.&INTTABLE.OD **Entity Name after Substitution:** BBM.*productid.targetid.*MYA40.OD
Diagmsg - Any Action	Can the user enter a view action in the DIAGMSG view in the current product? **Default Entity Name:** BBM.&PRODUCT.&CONTEXT.&INTTABLE.AO **Entity Name after Substitution:** BBM.*productid.targetid.*MYA40.AO
Diagmsg - Action - On	Can the user enter the ON command in the DIAGMSG view in the current product to enable a diagnostic messaging option? **Default Entity Name:** BBM.&PRODUCT.&CONTEXT.MYA40.#MSGSDAID.OA **Entity Name after Substitution:** BBM.*productid.targetid.*MYA40.*value*.OA where *value* represents what is actually displayed in the Option field of the DIAGMSG view.
Diagmsg - Action - Off	Can the user enter the OFF command in the DIAGMSG view in the current product to disable a diagnostic messaging option? **Default Entity Name:** BBM.&PRODUCT.&CONTEXT.MYA40.#MSGSDAID.OA **Entity Name after Substitution:** BBM.*productid.targetid.*MYA40.*value*.OA where *value* represents what is actually displayed in the Option field of the DIAGMSG view.
Diagnostic Storage - Table Data	Can the user access the DIAGSTOR view in the current product? **Default Entity Name:** BBM.&PRODUCT.&CONTEXT.&INTTABLE.OD **Entity Name after Substitution:** BBM.*productid.targetid.*MVA50.OD **Note:** The DIAGSTOR view displays storage available to the PAS, any key, LSQA, SQA, and CSA. DIAGSTOR should be used only at the request of BMC Software Customer Support and should be protected from unauthorized access.
Hist Data Set List - Table Data	Can the user access data for the DSLIST view in the current MAINVIEW product? **Default Entity Name:** BBM.&PRODUCT.&CONTEXT.&INTTABLE.OD **Entity Name after Substitution:** BBM.*productid.targetid.*MYAG0.OD
Hist Data Set List - Any Action	Can the user enter a DSLIST view action in the current MAINVIEW product? **Default Entity Name:** BBM.&PRODUCT.&CONTEXT.&INTTABLE.AO **Entity Name after Substitution:** BBM.*producid.targetid.*MYAG0.AO
Hist Data Set List - Action - Unquiesce	Can the user enter the U command in the DSLIST view for the current MAINVIEW product? **Default Entity Name:** BBM.&PRODUCT.&CONTEXT.&INTTABLE.&INTACTION.OA **Entity Name after Substitution:** BBM.*productid.targetid.*MYAG0.UNQUIESC.OA

Table 14. Resource Definitions Common to All MAINVIEW Products (Continued)

Resource name in SERDEF view	Resource definition and considerations
Hist Data Set List - Action - Dealloc	Can the user enter the D command in the DSLIST view for the current MAINVIEW product? **Default Entity Name:** BBM.&PRODUCT.&CONTEXT.&INTTABLE.&INTACTION.OA **Entity Name after Substitution:** BBM.*productid.targetid*.MYAG0.UNALLOC.OA
Hist Data Set List - Action - Save	Can the user enter the SAVE command in the DSLIST view for the current MAINVIEW product? **Default Entity Name:** BBM.&PRODUCT.&CONTEXT.&INTTABLE.&INTACTION.OA **Entity Name after Substitution:** BBM.*productid.targetid*.MYAG0.SAVE.OA
Hist Data Set List - Action - Reset	Can the user enter the R command in the DSLIST view for the current MAINVIEW product? **Default Entity Name:** BBM.&PRODUCT.&CONTEXT.&INTTABLE.&INTACTION.OA **Entity Name after Substitution:** BBM.*productid.targetid*.MYAG0.RESET.OA
Hist Data Set List - Action - Quiesce	Can the user enter the Q command in the DSLIST view for the current MAINVIEW product? **Default Entity Name:** BBM.&PRODUCT.&CONTEXT.&INTTABLE.&INTACTION.OA **Entity Name after Substitution:** BBM.*productid.targetid*.MYAG0.QUIESCE.OA
Hist Data Set List - Action - Force	Can the user enter the F command in the DSLIST view for the current MAINVIEW product? **Default Entity Name:** BBM.&PRODUCT.&CONTEXT.&INTTABLE.&INTACTION.OA **Entity Name after Substitution:** BBM.*productid.targetid*.MYAG0.FORCE.OA
Hist Data Set List - Action - Order	Can the user enter the O command in the DSLIST view for the current MAINVIEW product? **Default Entity Name:** BBM.&PRODUCT.&CONTEXT.&INTTABLE.&INTACTION.OA **Entity Name after Substitution:** BBM.*productid.targetid*.MYAG0.CHANGE.OA
Hist Data Set List - Action - Add	Can the user enter the ADD command in the DSLIST view for the current MAINVIEW product? **Default Entity Name:** BBM.&PRODUCT.&CONTEXT.&INTTABLE.&INTACTION.OA **Entity Name after Substitution:** BBM.*productid.targetid*.MYAG0.ADD.OA
Menu - Table Data	Can the user access an EZMenu in the current product? **Default Entity Name:** BBM.&PRODUCT.&CONTEXT.&INTTABLE.OD **Entity Name after Substitution:** BBM.*productid.targetid*.MX100.OD
Screens - Table Data	Can the user access the SCREENS view in the current product? **Note:** This resource is distributed as a disabled, rather than an enabled, security call because the security check is done, by default, through any security call made to ask if you can access the data in a view. If you select a screen definition that references data you are not permitted to access, the window is opened for the view but no data appears. An error message is displayed that states you are not authorized to display the view data. **Default Entity Name:** BBM.&PRODUCT.&CONTEXT.&INTTABLE.OD **Entity Name after Substitution:** BBM.*productid.targetid*.MCE90.OD

Table 14. Resource Definitions Common to All MAINVIEW Products (Continued)

Resource name in SERDEF view	Resource definition and considerations
Security Resources - Table Data	Can the user access the SERDEF view in the current product? **Default Entity Name:** BBM.&PRODUCT.&CONTEXT.&INTTABLE.OD **Entity Name after Substitution:** BBM.*productid.targetid.*MYA20.OD
Security Resources - Any Action	Can the user enter a view action in the SERDEF view in the current product? **Default Entity Name:** BBM.&PRODUCT.&CONTEXT.&INTTABLE.AO **Entity Name after Substitution:** BBM.*productid.targetid.*MYA20.AO
Security Resources - Action - Edit	Can the user enter the EDIT command in the SERDEF view in the current product? **Default Entity Name:** BBM.&PRODUCT.&CONTEXT.&INTTABLE.&INTACTION.OA **Entity Name after Substitution:** BBM.*productid.targetid.*MYA20.EDIT.OA
Security Resources - Alter Data Set	Can the user access the data set containing security resource parameter members? **Note:** This resource is distributed as a disabled, rather than an enabled, security call because the security check is done, by default, through the following common resources: •Default - Any Table Actions • Default - Specific Table Actions • Security Resources - Action - Edit **Class Name:** DATASET **Entity Name:** &DSN
SecResource List - Table Data	Can the user access the SERDEFL view in the current product? **Default Entity Name:** BBM.&PRODUCT.&CONTEXT.&INTTABLE.OD **Entity Name after Substitution:** BBM.*productid.targetid.*MYA30.OD
SecResource List - Any Action	Can the user enter a view action in the SERDEFL view in the current product? **Default Entity Name:** BBM.&PRODUCT.&CONTEXT.&INTTABLE.AO **Entity Name after Substitution:** BBM.*productid.targetid.*MYA30.AO
SecResource List - Action - Delete	Can the user enter the DELete command in the SERDEFL view in the current product? **Default Entity Name:** BBM.&PRODUCT.&CONTEXT.&INTTABLE.&INTACTION.OA **Entity Name after Substitution:** BBM.*productid.targetid.*MYA30.DELETE.OA

Table 14. Resource Definitions Common to All MAINVIEW Products (Continued)

Resource name in SERDEF view	Resource definition and considerations
SecResource List - Alter Data Set	Can the user access the data set containing security resource parameter members? **Note:** This resource is distributed as a disabled, rather than an enabled, security call because the security check is done, by default, through the following common resources: •Default - Any Table Actions •Default - Specific Table Actions •SecResource List - Action - Delete **Class Name:** DATASET **Entity Name:** &DSN
Views - Table Data	Can the user access the VIEWS view in the current product? **Note:** This resource is distributed as a disabled, rather than an enabled, security call because the security check is done, by default, through any security call made to ask if you can access the data associated with a specific view. If you select a view that references data you are not permitted to access, an error message is displayed that states you are not authorized to display the view data. **Default Entity Name:** BBM.&PRODUCT.&CONTEXT.&INTTABLE.OD **Entity Name after Substitution:** BBM.*productid*.*targetid*.MCE95.OD

Plex Manager Resources

To disable, enable, or customize resource access authorization requests to the ESM for a Plex Manager security resource:

1. Display the SERDEFL view in Plex Manager, as described in "Displaying a List of Members using the SERDEFL View" on page 186.
2. Select the member you want to change that has a **Product** field value of `PLEXMGR`.

A total of five unique entity names control all Plex Manager resources. To enable or disable all security for Plex Manager, you need only disable or enable all of the following high-level resources:

- Default - Table Data
- Default - Any Table Actions
- Default - Alter Data Set
- Default - Specific Table Actions
- Any Action (Plex Manager Views)

The following table lists all the security resources that are protected by Plex Manager. The **Default Entity Name** is the entity name shared by a set of similar resources and is used for high-level control of the entire set. The **Entity Name after Substitution** is the entity name with any substituted symbolic values for a particular resource. For a description of how the symbolics are used, see page 133.

The class name for all resources, unless otherwise indicated, is `$BBM`, which is usually, and by default, transformed to external resource class `FACILITY`.

Table 15. Resource Definitions for Plex Manager

Resource name in SERDEF view	Resource definition and considerations
Default - Table Data	Can the user access data for a Plex Manager view in the current product? This default resource controls a subset of similar resources. Enabling, disabling, or changing this resource automatically enables, disables, or changes all resources with the following entity name. **Default Entity Name:** BBM.&PRODUCT.&CONTEXT.&INTTABLE.OD **Entity Name after Substitution:** BBM.PLEXMGR.*targetid*.*tableid*.OD Specific resources belonging to this subset can be enabled, disabled, or changed on an individual basis.
Default - Any Table Actions	Can the user enter a view action for the current Plex Manager view? This default resource controls a subset of similar resources. Enabling, disabling, or changing this resource automatically enables, disables, or changes all resources with the following entity name. **Default Entity Name:** BBM.&PRODUCT.&CONTEXT.&INTTABLE.AO **Entity Name after Substitution:** BBM.PLEXMGR.*targetid*.*tableid*.AO Specific resources belonging to this subset can be enabled, disabled, or changed on an individual basis.
Default - Alter Data Set	Can the user access a data set? **Note:** This resource is distributed as a disabled, rather than an enabled, security call because the security check is done, by default, at a more precise level through the following common resources: •Default - Any Table Actions •Default - Specific Table Actions •CAS Definitions - Alter Data Set •SecDef Security Class - Alter Data Set •SecDef List - Alter Data Set •SecParm Definitions - Alter Data Set •SecParm Def List - Alter Data Set •SSI Context Defs - Alter Data Set •SSI Context Def List - Alter Data Set •Target Definitions - Alter Data Set •Target Def List - Alter Data Set This default resource controls a subset of similar resources. Enabling, disabling, or changing this resource automatically enables, disables, or changes all resources with the following class name. **Class Name:** DATASET **Entity Name:** &DSN Specific resources belonging to this subset can be enabled, disabled, or changed on an individual basis.

Table 15. Resource Definitions for Plex Manager (Continued)

Resource name in SERDEF view	Resource definition and considerations
Default - Specific Table Action	Can the user enter specific view actions in the CASDEF, SECDEF, SECDEFL, SEPDEF, SEPDEFL, CONDEF, CONDEFL, TGTDEF, or TGTDEFL views in the current Plex Manager product? This default resource controls a subset of similar resources. Enabling, disabling, or changing this resource automatically enables, disables, or changes all resources with the following entity name. **Default Entity Name:** BBM.&PRODUCT.&CONTEXT.&INTTABLE.&INTACTION.OA **Entity Name after Substitution:** BBM.PLEXMGR.*targetid*.*tableid*.*actionid*.OA Specific resources belonging to this subset can be enabled, disabled, or changed on an individual basis.
Any Action (Plexmgr Views)	Can the user enter a view action in the current Plex Manager product? **Default Entity Name:** BBM.&PRODUCT.&CONTEXT.AA **Entity Name after Substitution:** BBM.PLEXMGR.*targetid*.AA
CAS Active - Table Data	Can the user access data for the CASACT view in the current product? **Default Entity Name:** BBM.&PRODUCT.&CONTEXT.&INTTABLE.OD **Entity Name after Substitution:** BBM.PLEXMGR.*targetid*.CYAD0.OD
CAS Active - Any Action	Can the user enter a view action in the CASACT view in the current product? **Default Entity Name:** BBM.&PRODUCT.&CONTEXT.&INTTABLE.AO **Entity Name after Substitution:** BBM.PLEXMGR.*targetid*.CYAD0.AO
CAS Definitions - Table Data	Can the user access data for the CASDEF view in the current product? **Default Entity Name:** BBM.&PRODUCT.&CONTEXT.&INTTABLE.OD **Entity Name after Substitution:** BBM.PLEXMGR.*targetid*.CYAB0.OD
CAS Definitions - Any Action	Can the user enter a view action in the CASDEF view in the current product? **Default Entity Name:** BBM.&PRODUCT.&CONTEXT.&INTTABLE.AO **Entity Name after Substitution:** BBM.PLEXMGR.*targetid*.CYAB0.AO
CAS Definitions - Action - Install	Can the user enter the INStall command in the CASDEF view in the current product? **Default Entity Name:** BBM.&PRODUCT.&CONTEXT.&INTTABLE.&INTACTION.OA **Entity Name after Substitution:** BBM.PLEXMGR.*targetid*.CYAB0.INSTALL.OA
CAS Definitions - Action - Edit	Can the user enter the EDIT command in the CASDEF view in the current product? **Default Entity Name:** BBM.&PRODUCT.&CONTEXT.&INTTABLE.&INTACTION.OA **Entity Name after Substitution:** BBM.PLEXMGR.*targetid*.CYAB0.EDIT.OA

Table 15. Resource Definitions for Plex Manager (Continued)

Resource name in SERDEF view	Resource definition and considerations
CAS Definitions - Alter Data Set	Can the user access the BBPARM data set where CAS definitions reside for the current product? **Note:** This resource is distributed as a disabled, rather than an enabled, security call because the security check is done, by default, at a more precise level through the following common resources: •Default - Any Table Actions •Default - Specific Table Actions •CAS Definitions - Action - Edit **Class Name:** DATASET **Entity Name:** &DSN
Plex - Table Data	Can the user access the PLEX, PLEXOVER, TGTACT, and TGTACTZ views in the current product? **Note:** The PLEXOVER view is the default view that displays upon access to Plex Manager. An error results for any user who is denied access to this resource through the ESM. You can create a screen definition containing an acceptable view and name it PLEXMGR to avoid error messages occuring for these users when accessing Plex Manager. **Default Entity Name:** BBM.&PRODUCT.&CONTEXT.&INTTABLE.OD **Entity Name after Substitution:** BBM.PLEXMGR.*targetid*.CCE92.OD
SecDef Security Class - Table Data	Can the user access the SECDEF view in the current product? **Default Entity Name:** BBM.&PRODUCT.&CONTEXT.&INTTABLE.OD **Entity Name after Substitution:** BBM.PLEXMGR.*targetid*.CYA90.OD
SecDef Security Class - Any Action	Can the user enter a view action in the SECDEF view in the current product? **Default Entity Name:** BBM.&PRODUCT.&CONTEXT.&INTTABLE.AO **Entity Name after Substitution:** BBM.PLEXMGR.*targetid*.CYA90.AO
SecDef Security Class - Action - Edit	Can the user enter the EDIT command in the SECDEF view in the current product? **Default Entity Name:** BBM.&PRODUCT.&CONTEXT.&INTTABLE.&INTACTION.OA **Entity Name after Substitution:** BBM.PLEXMGR.*targetid*.CYA90.EDIT.OA

Table 15. Resource Definitions for Plex Manager (Continued)

Resource name in SERDEF view	Resource definition and considerations
SecDef Security Class - Alter Data Set	Can the user access the security parameter library where definitions for security class resource properties reside for the current product? **Note:** This resource is distributed as a disabled, rather than an enabled, security call because the security check is done, by default, at a more precise level through the following common resources: •Default - Any Table Actions •Default - Specific Table Actions •SecDef Security Class - Action - Edit **Class Name:** DATASET **Entity Name:** &DSN
SecDef List - Table Data	Can the user access the SECDEFL view in the current product? **Default Entity Name:** BBM.&PRODUCT.&CONTEXT.&INTTABLE.OD **Entity Name after Substitution:** BBM.PLEXMGR.*targetid*.CYAA0.OD
SecDef List - Any Action	Can the user enter a view action in the SECDEFL view in the current product? **Default Entity Name:** BBM.&PRODUCT.&CONTEXT.&INTTABLE.AO **Entity Name after Substitution:** BBM.PLEXMGR.*targetid*.CYAA0.AO
SecDef List - Action - Delete	Can the user enter the DELete command in the SECDEFL view in the current product? **Default Entity Name:** BBM.&PRODUCT.&CONTEXT.&INTTABLE.&INTACTION.OA **Entity Name after Substitution:** BBM.PLEXMGR.*targetid*.CYAA0.DELETE.OA
SecDef List - Alter Data Set	Can the user access the security parameter library where definitions for security class resource properties reside for the current product? **Note:** This resource is distributed as a disabled, rather than an enabled, security call because the security check is done, by default, at a more precise level through the following common resources: •Default - Any Table Actions •Default - Specific Table Actions •SecDef List - Action - Delete **Class Name:** DATASET **Entity Name:** &DSN
SecParm Definitions - Table Data	Can the user access the SEPDEF view in the current product? **Default Entity Name:** BBM.&PRODUCT.&CONTEXT.&INTTABLE.OD **Entity Name after Substitution:** BBM.PLEXMGR.*targetid*.CYA80.OD
SecParm Definitions - Any Action	Can the user enter a view action in the SEPDEF view in the current product? **Default Entity Name:** BBM.&PRODUCT.&CONTEXT.&INTTABLE.AO **Entity Name after Substitution:** BBM.PLEXMGR.*targetid*.CYA80.AO

Table 15. Resource Definitions for Plex Manager (Continued)

Resource name in SERDEF view	Resource definition and considerations
SecParm Definitions - Action - Edit	Can the user enter the EDIT command in the SEPDEF view in the current product? **Default Entity Name:** BBM.&PRODUCT.&CONTEXT.&INTTABLE.&INTACTION.OA **Entity Name after Substitution:** BBM.PLEXMGR.*targetid*.CYA80.EDIT.OA
SecParm Definitions - Alter Data Set	Can the user access the security parameter librarysecurity parameter library where definitions for global security parameters reside for the current product? **Note:** This resource is distributed as a disabled, rather than an enabled, security call because the security check is done, by default, at a more precise level through the following common resources: •Default - Any Table Actions •Default - Specific Table Actions •SecParm Definitions - Action - Edit **Class Name:** DATASET **Entity Name:** &DSN
SecParm Def List - Table Data	Can the user access the SEPDEFL view in the current product? **Default Entity Name:** BBM.&PRODUCT.&CONTEXT.&INTTABLE.OD **Entity Name after Substitution:** BBM.PLEXMGR.*targetid*.CYAE0.OD
SecParm Def List - Any Action	Can the user enter a view action in the SEPDEFL view in the current product? **Default Entity Name:** BBM.&PRODUCT.&CONTEXT.&INTTABLE.AO **Entity Name after Substitution:** BBM.PLEXMGR.*targetid*.CYAE0.AO
SecParm Def List - Action - Delete	Can the user enter the DELete command in the SEPDEFL view in the current product? **Default Entity Name:** BBM.&PRODUCT.&CONTEXT.&INTTABLE.&INTACTION.OA **Entity Name after Substitution:** BBM.PLEXMGR.*targetid*.CYAE0.DELETE.OA
SecParm Def List - Alter Data Set	Can the user access the security parameter library where definitions for global security parameters reside for the current product? **Note:** This resource is distributed as a disabled, rather than an enabled, security call because the security check is done, by default, at a more precise level through the following common resources: •Default - Any Table Actions •Default - Specific Table Actions •SecParm Def List - Action - Delete **Class Name:** DATASET **Entity Name:** &DSN
DiagSess - BBC Sessions - Table Data	Can the user access the DIAGSESS view in the current product? **Default Entity Name:** BBM.&PRODUCT.&CONTEXT.&INTTABLE.OD **Entity Name after Substitution:** BBM.PLEXMGR.*targetid*.CZZ02.OD

Table 15. Resource Definitions for Plex Manager (Continued)

Resource name in SERDEF view	Resource definition and considerations
SSI Context Defs - Table Data	Can the user access the CONDEF view in the current product? **Default Entity Name:** BBM.&PRODUCT.&CONTEXT.&INTTABLE.OD **Entity Name after Substitution:** BBM.PLEXMGR.*targetid*.CYA50.OD
SSI Context Defs - Any Action	Can the user enter a view action in the CONDEF view in the current product? **Default Entity Name:** BBM.&PRODUCT.&CONTEXT.&INTTABLE.AO **Entity Name after Substitution:** BBM.PLEXMGR.*targetid*.CYA50.AO
SSI Context Defs - Action - Install	Can the user enter the INSTall command in the CONDEF view in the current product? **Default Entity Name:** BBM.&PRODUCT.&CONTEXT.&INTTABLE.&INTACTION.OA **Entity Name after Substitution:** BBM.PLEXMGR.*targetid*.CYA50.INSTALL.OA
SSI Context Defs - Action - Edit	Can the user enter the EDIT command in the CONDEF view in the current product? **Default Entity Name:** BBM.&PRODUCT.&CONTEXT.&INTTABLE.&INTACTION.OA **Entity Name after Substitution:** BBM.PLEXMGR.*targetid*.CYA50.EDIT.OA
SSI Context Defs - Alter Data Set	Can the user access the BBPARM data set where SSI context definitions reside for the current product? **Note:** This resource is distributed as a disabled, rather than an enabled, security call because the security check is done, by default, at a more precise level through the following common resources: •Default - Any Table Actions •Default - Specific Table Actions •SSI Context Defs - Action - Edit **Class Name:** DATASET **Entity Name:** &DSN
SSI Context Def List - Table Data	Can the user access the CONDEFL view in the current product? **Default Entity Name:** BBM.&PRODUCT.&CONTEXT.&INTTABLE.OD **Entity Name after Substitution:** BBM.PLEXMGR.*targetid*.CYA60.OD
SSI Context Def List - Any Action	Can the user enter a view action in the CONDEFL view in the current product? **Default Entity Name:** BBM.&PRODUCT.&CONTEXT.&INTTABLE.AO **Entity Name after Substitution:** BBM.PLEXMGR.*targetid*.CYA60.AO
SSI Context Def List - Action - Delete	Can the user enter the DELete command in the CONDEFL view in the current product? **Default Entity Name:** BBM.&PRODUCT.&CONTEXT.&INTTABLE.&INTACTION.OA **Entity Name after Substitution:** BBM.PLEXMGR.*targetid*.CYA60.DELETE.OA

Table 15. Resource Definitions for Plex Manager (Continued)

Resource name in SERDEF view	Resource definition and considerations
SSI Context Def List - Alter Data Set	Can the user access the BBPARM data set where SSI context definitions reside for the current product? **Note:** This resource is distributed as a disabled, rather than an enabled, security call because the security check is done, by default, at a more precise level through the following common resources: •Default - Any Table Actions •Default - Specific Table Actions •SSI Context Def List - Action - Delete **Class Name:** DATASET **Entity Name:** &DSN
SSIContextMem - Table Data	Can the user access the CONACT, CONACTZ, or CONACTD views in the current product? **Default Entity Name:** BBM.&PRODUCT.&CONTEXT.&INTTABLE.OD **Entity Name after Substitution:** BBM.PLEXMGR.*targetid*.CYA70.OD
DiagSys - BBC Systems - Table Data	Can the user access the DIAGSYS view in the current product? **Default Entity Name:** BBM.&PRODUCT.&CONTEXT.&INTTABLE.OD **Entity Name after Substitution:** BBM.PLEXMGR.*targetid*.CZZ01.OD
Target Definitions - Table Data	Can the user access the TGTDEF view in the current product? **Default Entity Name:** BBM.&PRODUCT.&CONTEXT.&INTTABLE.OD **Entity Name after Substitution:** BBM.PLEXMGR.*targetid*.CYA10.OD
Target Definitions - Any Action	Can the user enter a view action in the TGTDEF view in the current product? **Default Entity Name:** BBM.&PRODUCT.&CONTEXT.&INTTABLE.AO **Entity Name after Substitution:** BBM.PLEXMGR.*targetid*.CYA10.AO
Target Definitions - Action - Install	Can the user enter the INSTall command in the TGTDEF view in the current product? **Default Entity Name:** BBM.&PRODUCT.&CONTEXT.&INTTABLE.&INTACTION.OA **Entity Name after Substitution:** BBM.PLEXMGR.*targetid*.CYA10.INSTALL.OA
Target Definitions - Action - Edit	Can the user enter the EDIT command in the TGTDEF view in the current product? **Default Entity Name:** BBM.&PRODUCT.&CONTEXT.&INTTABLE.&INTACTION.OA **Entity Name after Substitution:** BBM.PLEXMGR.*targetid*.CYA10.EDIT.OA

Table 15. Resource Definitions for Plex Manager (Continued)

Resource name in SERDEF view	Resource definition and considerations
Target Definitions - Alter Data Set	Can the user access the BBPARM data set where target definitions reside for the current product? **Note:** This resource is distributed as a disabled, rather than an enabled, security call because the security check is done, by default, at a more precise level through the following common resources: •Default - Any Table Actions •Default - Specific Table Actions •Target Definitions - Action - Edit **Class Name:** DATASET **Entity Name:** &DSN
Target Def List - Table Data	Can the user access the TGTDEFL view in the current product? **Default Entity Name:** BBM.&PRODUCT.&CONTEXT.&INTTABLE.OD **Entity Name after Substitution:** BBM.PLEXMGR.*targetid*.CYAC0.OD
Target Def List - Any Action	Can the user enter a view action in the TGTDEFL view in the current product? **Default Entity Name:** BBM.&PRODUCT.&CONTEXT.&INTTABLE.AO **Entity Name after Substitution:** BBM.PLEXMGR.*targetid*.CYAC0.AO
Target Def List - Action - Delete	Can the user enter the DELete command in the TGTDEFL view in the current product? **Default Entity Name:** BBM.&PRODUCT.&CONTEXT.&INTTABLE.&INTACTION.OA **Entity Name after Substitution:** BBM.PLEXMGR.*targetid*.CYAC0.DELETE.OA
Target Def List - Alter Data Set	Can the user access the BBPARM data set where target definitions reside for the current product? **Note:** This resource is distributed as a disabled, rather than an enabled, security call because the security check is done, by default, at a more precise level through the following common resources: •Default - Any Table Actions •Default - Specific Table Actions •Target Def List - Action - Delete **Class Name:** DATASET **Entity Name:** &DSN

CMF MONITOR and MAINVIEW for OS/390 Resources

To disable, enable, or customize resource access authorization requests to the ESM for resources accessed through the MVS PAS:

1. Display the SERDEFL view in either or both CMF MONITOR or MAINVIEW for OS/390 (for whichever product you are customizing) as described in "Displaying a List of Members using the SERDEFL View" on page 186.

2. Select the member you want to change.

Note: If you have both products and want the security calls made for each product to be different, you can

1. customize one set of calls in the default member (suffix 00)
2. customize another set of calls in a member with a suffix value of 01 (or any two-digit value up to 99)
3. define target definitions for each product that specify the appropriate suffix value in the **SerDef Suffix** field

A total of five unique entity names control all CMF MONITOR and MAINVIEW for OS/390 resources. To enable or disable all security for these two products, you need only disable or enable all of the following high-level resources:

- Default - Table Data
- Default - Any Table Actions
- Default - Primary Actions (All Views)
- Default - Specific Table Actions
- Any Action (MVMVS or CMF Views)

Note: The MVScope facility can collect and display data accessed by I/O requests. This data can be displayed in the MSICCW view. Because of the sensitive nature of some of the data collected, by default the MAINVIEW Security Interface prevents users from collecting or viewing I/O data. To allow all users access to I/O data, disable the security for `MVMVS MVScope provide I/O data` in the SERDEF view. To allow specific users to collect and view I/O data, follow the procedures specified by your ESM for that resource.

The following table lists all the resources that are protected by CMF MONITOR and MAINVIEW for OS/390. The **Default Entity Name** is the entity name shared by a set of similar resources and is used for high-level control of the entire set. The **Entity Name after Substitution** is the entity name with any substituted symbolic values for a particular resource. For a description of how the symbolics are used, see page 133.

The class name for all resources, unless otherwise indicated, is `$BBM`, which is usually, and by default, transformed to external resource class `FACILITY`.

Table 16. Resource Definitions for CMF MONITOR and MAINVIEW for OS/390

Resource name in SERDEF view	Resource definition and considerations
Default - Table Data	Can the user access a view in CMF MONITOR, MAINVIEW for OS/390 or both? This default resource controls a subset of similar individual resources. Enabling, disabling, or changing this resource automatically enables, disables, or changes all resources with the following entity name: **Default Entity Name:** BBM.MVMVS.&CONTEXT.&INTTABLE.OD **Entity Name after Substitution:** BBM.MVMVS.*targetid*.*tableid*.OD Specific resources with this same default entity name can be enabled, disabled, or changed on an individual basis.
Default - Any Table Actions	Can the user enter a view action for the current CMF MONITOR or MAINVIEW for OS/390 view? This default resource controls a subset of similar individual resources. Enabling, disabling, or changing this resource automatically enables, disables, or changes all resources with the following entity name: **Default Entity Name:** BBM.MVMVS.&CONTEXT.&INTTABLE.AO **Entity Name after Substitution:** BBM.MVMVS.*targetid*.*tableid*.AO Specific resources with this same default entity name can be enabled, disabled, or changed on an individual basis.
Default - Primary Actions (All Views)	**Note:** Affects only MAINVIEW for OS/390. Can the user enter the CSMON or SYSPROG command in the current MAINVIEW for OS/390? This default resource controls the following specific primary actions: • MVMVS Primary Action - CSMON • MVMVS Primary Action - SYSPROG Enabling, disabling, or changing this resource automatically enables, disables, or changes both the CSMON and SYSPROG utilities. These utilities can be enabled, disabled, or changed on an individual basis. **Default Entity Name:** BBM.MVMVS.&CONTEXT.&INTACTION.PA **Entity Name after Substitution:** BBM.MVMVS.*targetid*.CSMON.PA BBM.MVMVS.*targetid*.SYSPROG.PA **Note:** SYSPROG services can be accessed through MAINVIEW for OS/390 and through TSO as line commands. They can also be executed as a batch job or started task. To secure these services absolutely, you ***must*** secure SYSPROG through the BBSEC member of SYS1.PARMLIB or designated data set. See Chapter 7, "Securing SYSPROG and CSMON Services" on page 121 for information on securing individual services. See the *MAINVIEW for OS/390 Customization Guide* for more information.

Table 16. Resource Definitions for CMF MONITOR and MAINVIEW for OS/390 (Continued)

Resource name in SERDEF view	Resource definition and considerations
Default - Specific Table Action	Can the user enter specific view actions in specific CMF MONITOR and/or MAINVIEW for OS/390 views? **Note:** If you change this resource using the SERDEF view in CMF MONITOR, the resources starting with MVMVS are changed as well. There is no effect on CMF MONITOR for the MAINVIEW for OS/390 resources, since the associated views do not display in CMF MONITOR. However, if MAINVIEW for OS/390 is installed in the same SMP zone or in a shared DASD environment, both products use the same security parameter library. Changing this resource in CMF MONITOR does impact MAINVIEW for OS/390. This default resource controls a subset of similar resources. Enabling, disabling, or changing this resource automatically enables, disables, or changes all resources with the following entity name: **Default Entity Name:** BBM.MVMVS.&CONTEXT.&INTTABLE.&INTACTION.OA **Entity Name after Substitution:** BBM.MVMVS.*targetid*.*tableid*.*actionid*.OA Specific resources belonging to this subset can be enabled, disabled, or changed on an individual basis.
Any Action (MVMVS or CMF Views)	Can the user enter a view action? **Default Entity Name:** BBM.MVMVS.&CONTEXT.AA **Entity Name after Substitution:** BBM.MVMVS.*targetid*.AA
Addr Space - Table Data	Can the user access address space data? **Default Entity Name:** BBM.MVMVS.&CONTEXT.&INTTABLE.OD **Entity Name after Substitution:** BBM.MVMVS.*targetid*.DC201.OD
Addr Space across interval - Table Data	Can the user access address space interval data? **Default Entity Name:** BBM.MVMVS.&CONTEXT.&INTTABLE.OD **Entity Name after Substitution:** BBM.MVMVS.*targetid*.DC301.OD
Addr Space Device Use/Delay - Table Data	Can the user access address space device use/delay data? **Default Entity Name:** BBM.MVMVS.&CONTEXT.&INTTABLE.OD **Entity Name after Substitution:** BBM.MVMVS.*targetid*.DC193.OD
Addr Space Enq Use/Delay - Table Data	Can the user access address space enqueue use/delay data? **Default Entity Name:** BBM.MVMVS.&CONTEXT.&INTTABLE.OD **Entity Name after Substitution:** BBM.MVMVS.*targetid*.DC293.OD
Address Space HSM Use/Delay - Table Data	Can the user access address space HSM use/delay data? **Default Entity Name:** BBM.MVMVS.&CONTEXT.&INTTABLE.OD BBM.MVMVS.*targetid*.DC393.OD

Table 16. Resource Definitions for CMF MONITOR and MAINVIEW for OS/390 (Continued)

Resource name in SERDEF view	Resource definition and considerations
Address Space JES Use/Delay - Table Data	Can the user access address space JES use/delay data? **Default Entity Name:** BBM.MVMVS.&CONTEXT.&INTTABLE.OD **Entity Name after Substitution:** BBM.MVMVS.*targetid*.DC493.OD
Address Space MSG Use/Delay - Table Data	Can the user access address space MSG use/delay data? **Default Entity Name:** BBM.MVMVS.&CONTEXT.&INTTABLE.OD **Entity Name after Substitution:** BBM.MVMVS.*targetid*.DC593.OD
Addr Space in Workload - Table Data	Can the user access address space in workload data? **Default Entity Name:** BBM.MVMVS.&CONTEXT.&INTTABLE.OD **Entity Name after Substitution:** BBM.MVMVS.*targetid*.DC101.OD
Address Space XCF Use/Delay - Table Data	Can the user access address space XCF use/delay data? **Default Entity Name:** BBM.MVMVS.&CONTEXT.&INTTABLE.OD **Entity Name after Substitution:** BBM.MVMVS.*targetid*.DC793.OD
Channel Path - Table Data	Can the user access channel path data? **Default Entity Name:** BBM.MVMVS.&CONTEXT.&INTTABLE.OD **Entity Name after Substitution:** BBM.MVMVS.*targetid*.DC124.OD
Channel Path on LCU - Table Data	Can the user access channel path on LCU data? **Default Entity Name:** BBM.MVMVS.&CONTEXT.&INTTABLE.OD **Entity Name after Substitution:** BBM.MVMVS.*targetid*.DC224.OD
Common Storage - Table Data	Can the user access common storage data? **Default Entity Name:** BBM.MVMVS.&CONTEXT.&INTTABLE.OD **Entity Name after Substitution:** BBM.MVMVS.*targetid*.DCE39.OD
Coupling Facility - Table Data	Can the user access coupling facility data? **Default Entity Name:** BBM.MVMVS.&CONTEXT.&INTTABLE.OD **Entity Name after Substitution:** BBM.MVMVS.*targetid*.DCE20.OD
CMF Reserve - Table Data	Can the user access CMF reserve data? **Default Entity Name:** BBM.MVMVS.&CONTEXT.&INTTABLE.OD **Entity Name after Substitution:** BBM.MVMVS.*targetid*.DCE0C.OD
CMF System Interval - Table Data	Can the user access CMF system interval data? **Default Entity Name:** BBM.MVMVS.&CONTEXT.&INTTABLE.OD **Entity Name after Substitution:** BBM.MVMVS.*targetid*.DC108.OD

Table 16. Resource Definitions for CMF MONITOR and MAINVIEW for OS/390 (Continued)

Resource name in SERDEF view	Resource definition and considerations
CMF XDS API CX10XDQY/ CX10XDRC Actions	**Note:** Affects only CMF MONITOR. Can the user access a cross-system SMF buffer? **Class Name:** FACILITY **Default Entity Name:** ERBSDS.SMFDATA
CMF XDS API CX10XDGS Action	**Note:** Affects only CMF MONITOR. Can the user access cross-system type 79 performance snapshot data? **Default Entity Name:** BBM.MVMVS.&CONTEXT.&INTACTION.PA **Entity Name after Substitution:** BBM.MVMVS.*targetid*.*tableid*.PA **Note:** This resource is distributed as a disabled, rather than an enabled, security call.
CPU - Table Data	Can the user access CPU data? **Default Entity Name:** BBM.MVMVS.&CONTEXT.&INTTABLE.OD **Entity Name after Substitution:** BBM.MVMVS.*targetid*.DCE05.OD
Data Collect Stat - Table Data	Can the user access data for the DCSTAT view? **Default Entity Name:** BBM.MVMVS.&CONTEXT.&INTTABLE.OD **Entity Name after Substitution:** BBM.MVMVS.*targetid*.DC427.OD
Data Collect Stat - Any Action	Can the user enter a DCSTAT view action? **Default Entity Name:** BBM.MVMVS.&CONTEXT.&INTTABLE.AO **Entity Name after Substitution:** BBM.MVMVS.*targetid*.DC427.AO
Data Collect Stat - Action - Deact	Can the user enter the D command in the DCSTAT view? **Default Entity Name:** BBM.MVMVS.&CONTEXT.&INTTABLE.&INTACTION.OA **Entity Name after Substitution:** BBM.MVMVS.*targetid*.DC427.DEACT.OA
Data Collect Stat - Action - Activate	Can the user enter the A command in the DCSTAT view? **Default Entity Name:** BBM.MVMVS.&CONTEXT.&INTTABLE.&INTACTION.OA **Entity Name after Substitution:** BBM.MVMVS.*targetid*.DC427.ACTIVATE.OA
DataSet I/O - Table Data	Can the user access data set I/O data? **Default Entity Name:** BBM.MVMVS.&CONTEXT.&INTTABLE.OD **Entity Name after Substitution:** BBM.MVMVS.*targetid*.DC327.OD
Device - Table Data	Can the user access device data? **Default Entity Name:** BBM.MVMVS.&CONTEXT.&INTTABLE.OD **Entity Name after Substitution:** BBM.MVMVS.*targetid*.DCE22.OD

Table 16. Resource Definitions for CMF MONITOR and MAINVIEW for OS/390 (Continued)

Resource name in SERDEF view	Resource definition and considerations
Enqueue - Table Data	Can the user access enqueue data? **Default Entity Name:** BBM.MVMVS.&CONTEXT.&INTTABLE.OD **Entity Name after Substitution:** BBM.MVMVS.*targetid*.DCE0B.OD
Exception Admin - Table Data	**Note:** Affects only MAINVIEW for OS/390. Can the user access system interval data for a MAINVIEW for OS/390 view? **Default Entity Name:** BBM.MVMVS.&CONTEXT.&INTTABLE.OD **Entity Name after Substitution:** BBM.MVMVS.*targetid*.DYEM0.OD
Exception Admin - Any Action	**Note:** Affects only MAINVIEW for OS/390. Can the user enter a view action for the current MAINVIEW for OS/390 view? **Default Entity Name:** BBM.MVMVS.&CONTEXT.&INTTABLE.AO **Entity Name after Substitution:** BBM.MVMVS.*targetid*.DYEM0.AO
Exception Admin - Action - Start AEW	**Note:** Affects only MAINVIEW for OS/390. Can the user enter the Start AEW command from a MAINVIEW for OS/390 view? **Default Entity Name:** BBM.MVMVS.&CONTEXT.&INTTABLE.&INTACTION.OA **Entity Name after Substitution:** BBM.MVMVS.*targetid*.DYEM0.STRTAEW.OA
Exception Admin - Action - Stop AEW	**Note:** Affects only MAINVIEW for OS/390. Can the user enter the Stop AEW command from a MAINVIEW for OS/390 view? **Default Entity Name:** BBM.MVMVS.&CONTEXT.&INTTABLE.&INTACTION.OA **Entity Name after Substitution:** BBM.MVMVS.*targetid*.DYEM0.STOPAEW.OA
Exception Admin - Action - Delete Member	**Note:** Affects only MAINVIEW for OS/390. Can the user enter the Delete Member command from a MAINVIEW for OS/390 view? **Default Entity Name:** BBM.MVMVS.&CONTEXT.&INTTABLE.&INTACTION.OA **Entity Name after Substitution:** BBM.MVMVS.*targetid*.DYEM0.DELMEM.OA
Exception Admin - Action - Display	**Note:** Affects only MAINVIEW for OS/390. Can the user enter the Display command from a MAINVIEW for OS/390 view? **Default Entity Name:** BBM.MVMVS.&CONTEXT.&INTTABLE.&INTACTION.OA **Entity Name after Substitution:** BBM.MVMVS.*targetid*.DYEM0.DISPLAY.OA

Table 16. Resource Definitions for CMF MONITOR and MAINVIEW for OS/390 (Continued)

Resource name in SERDEF view	Resource definition and considerations
Exception Admin - Action - Read Directory	**Note:** Affects only MAINVIEW for OS/390. Can the user enter the Read Directory command from a MAINVIEW for OS/390 view? **Default Entity Name:** BBM.MVMVS.&CONTEXT.&INTTABLE.&INTACTION.OA **Entity Name after Substitution:** BBM.MVMVS.*targetid*.DYEM0.READDIR.OA
Exception Admin - Action - Read Member	**Note:** Affects only MAINVIEW for OS/390. Can the user enter the Read Member command from a MAINVIEW for OS/390 view? **Default Entity Name:** BBM.MVMVS.&CONTEXT.&INTTABLE.&INTACTION.OA **Entity Name after Substitution:** BBM.MVMVS.*targetid*.DYEM0.READMEM.OA
Exception Admin - Action - Write Member	**Note:** Affects only MAINVIEW for OS/390. Can the user enter the Write Member command from a MAINVIEW for OS/390 view? **Default Entity Name:** BBM.MVMVS.&CONTEXT.&INTTABLE.&INTACTION.OA **Entity Name after Substitution:** BBM.MVMVS.*targetid*.DYEM0.WRITEMEM.OA
Exception Admin - Action - Active Sampler	**Note:** Affects only MAINVIEW for OS/390. Can the user enter the Active AEW Sampler command from a MAINVIEW for OS/390 view? **Default Entity Name:** BBM.MVMVS.&CONTEXT.&INTTABLE.&INTACTION.OA **Entity Name after Substitution:** BBM.MVMVS.*targetid*.DYEM0.ACTSAMPL.OA
HSM Detail Data - Table Data	Can the user access HSM detail data? **Default Entity Name:** BBM.MVMVS.&CONTEXT.&INTTABLE.OD **Entity Name after Substitution:** BBM.MVMVS.*targetid*.DCE09.OD
Logical Control Unit - Table Data	Can the user access logical control unit data? **Default Entity Name:** BBM.MVMVS.&CONTEXT.&INTTABLE.OD **Entity Name after Substitution:** BBM.MVMVS.*targetid*.DCE23.OD
Lpar/Domain - Table Data	Can the user access LPAR/domain data? **Default Entity Name:** BBM.MVMVS.&CONTEXT.&INTTABLE.OD **Entity Name after Substitution:** BBM.MVMVS.*targetid*.DCE04.OD
MVMVS Access List - Table Data	Can the user access list data? **Default Entity Name:** BBM.MVMVS.&CONTEXT.&INTTABLE.OD **Entity Name after Substitution:** BBM.MVMVS.*targetid*.DCE34.OD

Table 16. Resource Definitions for CMF MONITOR and MAINVIEW for OS/390 (Continued)

Resource name in SERDEF view	Resource definition and considerations
MVMVS Consoles - Table Data	**Note:** Affects only MAINVIEW for OS/390. Can the user access console data? **Default Entity Name:** BBM.MVMVS.&CONTEXT.&INTTABLE.OD **Entity Name after Substitution:** BBM.MVMVS.*targetid*.DC227.OD
MVMVS Consoles - Any Action	**Note:** Affects only MAINVIEW for OS/390. Can the user enter a view action in any MAINVIEW for OS/390 view? **Default Entity Name:** BBM.MVMVS.&CONTEXT.&INTTABLE.AO **Entity Name after Substitution:** BBM.MVMVS.*targetid*.DC227.AO
MVMVS Consoles - Action - Command	**Note:** Affects only MAINVIEW for OS/390. Can the user enter an MVS command from any view of MAINVIEW for OS/390? **Default Entity Name:** BBM.MVMVS.&CONTEXT.&INTTABLE.&INTACTION.OA **Entity Name after Substitution:** BBM.MVMVS.*targetid*.DC227.CMD.OA
MVMVS Consoles List - Table Data	**Note:** Affects only MAINVIEW for OS/390. Can the user access console list data for a MAINVIEW for OS/390 view? **Default Entity Name:** BBM.MVMVS.&CONTEXT.&INTTABLE.OD **Entity Name after Substitution:** BBM.MVMVS.*targetid*.DC127.CMD.OD
MVMVS Primary Action - CSMON	**Note:** Affects only MAINVIEW for OS/390. Can the user enter the CSMON command from a MAINVIEW for OS/390 view? **Default Entity Name:** BBM.MVMVS.&CONTEXT.&INTACTION.PA **Entity Name after Substitution:** BBM.MVMVS.*targetid*.CSMON.PA
MVMVS DataSpace - Table Data	**Note:** Affects only MAINVIEW for OS/390. Can the user access data space data for a MAINVIEW for OS/390 view? **Default Entity Name:** BBM.MVMVS.&CONTEXT.&INTTABLE.OD **Entity Name after Substitution:** BBM.MVMVS.*targetid*.DCE33.OD
MVMVS Expanded Storage Info - Table Data	**Note:** Affects only MAINVIEW for OS/390. Can the user access expanded storage data for a MAINVIEW for OS/390 view? **Default Entity Name:** BBM.MVMVS.&CONTEXT.&INTTABLE.OD **Entity Name after Substitution:** BBM.MVMVS.*targetid*.DCE53.OD

Table 16. Resource Definitions for CMF MONITOR and MAINVIEW for OS/390 (Continued)

Resource name in SERDEF view	Resource definition and considerations
MVMVS Primary Action - SYSPROG	**Note:** Affects only MAINVIEW for OS/390. Can the user enter the SYSPROG command from a MAINVIEW for OS/390 view in the current product? **Default Entity Name:** BBM.MVMVS.&CONTEXT.&INTACTION.PA **Entity Name after Substitution:** BBM.MVMVS.*targetid*.SYSPROG.PA **Note:** SYSPROG services can be accessed through MAINVIEW for OS/390, through TSO as RESOLVE commands, and in batch jobs and started tasks. To secure these services absolutely, you ***must*** secure SYSPROG through the BBSEC member of SYS1.PARMLIB. See the *MAINVIEW for OS/390 Customization Guide* for more information.
MVMVS Jobs - Action - C Command Jsre	**Note:** Affects only MAINVIEW for OS/390. Can the user enter the C line command from job step views? These views include JSOVER, JSOVERZ, JSUSE, JSUSEZ, JSCPU, JSCPUZ, JSIO, JSIOZ, JSSTOR, JSSTORZ, JSPAGOV, JSPAGOVZ, JSSRM, JSSRMZ, JSTERM, and JSTERMZ. **Default Entity Name:** BBM.MVMVS.&CONTEXT.&INTTABLE.&INTACTION.OA **Entity Name after Substitution:** BBM.MVMVS.*targetid*.DCE02.CLCMD.OA
MVMVS Jobs - Action - C Command Dsre	**Note:** Affects only MAINVIEW for OS/390. Can the user enter the C line command from data set level views? These views include DSVOL, DSVOLZ, DSJOB, DSJOBZ, DSDSN, and DSDSNZ. **Default Entity Name:** BBM.MVMVS.&CONTEXT.&INTTABLE.&INTACTION.OA **Entity Name after Substitution:** BBM.MVMVS.*targetid*.DCE2E.CLCMD.OA
MVMVS Jobs - Action - C Command Asiw	**Note:** Affects only MAINVIEW for OS/390. Can the user enter the C line command from job views? These views include JCPU, JCPUZ, JCPUR, JIO, JIOZ, JIOR, JOVER, JOVERZ, JOVERR, JPAGDM, JPAGOV, JPAGOVZ, JPAGOVR, JPASW, JPASWZ, JSRM, JSRMZ, JSRMR, JSTOR, JSTORZ, JSTORR, JSUM, JSTAT, JSTASTZ, JUSE, JUSEZ, and JUSER. **Default Entity Name:** BBM.MVMVS.&CONTEXT.&INTTABLE.&INTACTION.OA **Entity Name after Substitution:** BBM.MVMVS.*targetid*.DC101.CLCMD.OA
MVMVS Jobs - Action - C Command Asre	**Note:** Affects only CMF MONITOR Online. Can the user enter the C line command from job views? These views include ARD and ARDZ. **Default Entity Name:** BBM.MVMVS.&CONTEXT.&INTTABLE.&INTACTION.OA **Entity Name after Substitution:** BBM.MVMVS.*targetid*.DC201.CLCMD.OA

Table 16. Resource Definitions for CMF MONITOR and MAINVIEW for OS/390 (Continued)

Resource name in SERDEF view	Resource definition and considerations
MVMVS Jobs - Action - C Command WusrEnq	**Note:** Affects only MAINVIEW for OS/390. Can the user enter the C line command from ENQ delay views? These views include JDENQ, JDENQZ, JUENQ, and JUENQZ. **Default Entity Name:** BBM.MVMVS.&CONTEXT.&INTTABLE.&INTACTION.OA **Entity Name after Substitution:** BBM.MVMVS.*targetid*.DC293.CLCMD.OA
MVMVS Jobs - Action - C Command WusrHSM	**Note:** Affects only MAINVIEW for OS/390. Can the user enter the C line command from HSM delay views? These views include JHSMD, JHSMDZ, and JHSMSTAT. **Default Entity Name:** BBM.MVMVS.&CONTEXT.&INTTABLE.&INTACTION.OA **Entity Name after Substitution:** BBM.MVMVS.*targetid*.DC393.CLCMD.OA
MVMVS Jobs - Action - C Command WusrJES	**Note:** Affects only MAINVIEW for OS/390. Can the user enter the C line command from JES delay views? These views include JJESD and JJESDZ. **Default Entity Name:** BBM.MVMVS.&CONTEXT.&INTTABLE.&INTACTION.OA **Entity Name after Substitution:** BBM.MVMVS.*targetid*.DC493.CLCMD.OA
MVMVS Jobs - Action - C Command WusrMSG	**Note:** Affects only MAINVIEW for OS/390. Can the user enter the C line command from message delay views? These views include JMSGD and JMSGDZ. **Default Entity Name:** BBM.MVMVS.&CONTEXT.&INTTABLE.&INTACTION.OA **Entity Name after Substitution:** BBM.MVMVS.*targetid*.DC593.CLCMD.OA
MVMVS Jobs - Action - C Command WusrXCF	**Note:** Affects only MAINVIEW for OS/390. Can the user enter the C line command from XCF delay views? These views include JXCFD and JXCFDZ. **Default Entity Name:** BBM.MVMVS.&CONTEXT.&INTTABLE.&INTACTION.OA **Entity Name after Substitution:** BBM.MVMVS.*targetid*.DC793.CLCMD.OA
MVMVS Warning - Table Data	**Note:** Affects only MAINVIEW for OS/390. Can the user access any MAINVIEW for OS/390 view? **Default Entity Name:** BBM.MVMVS.&CONTEXT.&INTTABLE.OD **Entity Name after Substitution:** BBM.MVMVS.*targetid*.DYEM0.OD

Table 16. Resource Definitions for CMF MONITOR and MAINVIEW for OS/390 (Continued)

Resource name in SERDEF view	Resource definition and considerations
MVMVS Wkld List - Table Data	**Note:** Affects only MAINVIEW for OS/390. Can the user access the WKLIST view? **Default Entity Name:** BBM.MVMVS.&CONTEXT.&INTTABLE.OD **Entity Name after Substitution:** BBM.MVMVS.*targetid*.DC627.OD
MVMVS Wkld List - Any Action	**Note:** Affects only MAINVIEW for OS/390. Can the user enter any command from the WKLIST view? **Default Entity Name:** BBM.MVMVS.&CONTEXT.&INTTABLE.AO **Entity Name after Substitution:** BBM.MVMVS.*targetid*.DC627.AO
MVMVS Wkld List - Action - Update	**Note:** Affects only MAINVIEW for OS/390. Can the user enter the Update command from the WKLIST view? **Default Entity Name:** BBM.MVMVS.&CONTEXT.&INTTABLE.&INTACTION.OA **Entity Name after Substitution:** BBM.MVMVS.*targetid*.DC627.UPDTWKLD.OA
MVMVS Wkld List - Action - Save	**Note:** Affects only MAINVIEW for OS/390. Can the user enter the SAVE command from the WKLIST view? **Default Entity Name:** BBM.MVMVS.&CONTEXT.&INTTABLE.&INTACTION.OA **Entity Name after Substitution:** BBM.MVMVS.*targetid*.DC627.SAVEWKLD.OA
MVMVS Wkld List - Action - Delete	**Note:** Affects only MAINVIEW for OS/390. Can the user enter the Delete command from the WKLIST view? **Default Entity Name:** BBM.MVMVS.&CONTEXT.&INTTABLE.&INTACTION.OA **Entity Name after Substitution:** BBM.MVMVS.*targetid*.DC627.DLETWKLD.OA
MVMVS Wkld List - Action - Alt/Rename	**Note:** Affects only MAINVIEW for OS/390. Can the user enter the Alt/Rename command from the WKLIST view? **Default Entity Name:** BBM.MVMVS.&CONTEXT.&INTTABLE.&INTACTION.OA **Entity Name after Substitution:** BBM.MVMVS.*targetid*.DC627.ALTRWKLD.OA
MVMVS MVScope provide I/O data	**Note:** Affects only MAINVIEW for OS/390. Can the user start a monitor set that provides I/O data? **Default Entity Name:** BBM.MVMVS.&CONTEXT.&INTACTION.PA **Entity Name after Substitution:** BBM.MVMVS.*targetid*.MVSCPDAT.PA

Table 16. Resource Definitions for CMF MONITOR and MAINVIEW for OS/390 (Continued)

Resource name in SERDEF view	Resource definition and considerations
MVMVS Primary Action - MVSCOPE	**Note:** Affects only MAINVIEW for OS/390. Can the user start an MVScope monitor set with the MVSCOPE primary command? **Default Entity Name:** BBM.MVMVS.&CONTEXT.&INTACTION.PA **Entity Name after Substitution:** BBM.MVMVS.*targetid*.MVSCOPE.PA
MVScope DD Entry - Table Data	**Note:** Affects only MAINVIEW for OS/390. Can the user access data for MVScope DD views? **Default Entity Name:** BBM.MVMVS.&CONTEXT.&INTTABLE.OD **Entity Name after Substitution:** BBM.MVMVS.*targetid*.DCE13.OD
MVScope Execution Unit - Table Data	**Note:** Affects only MAINVIEW for OS/390. Can the user access data for MVScope execution unit views? **Default Entity Name:** BBM.MVMVS.&CONTEXT.&INTTABLE.OD **Entity Name after Substitution:** BBM.MVMVS.*targetid*.DCE11.OD
MVScope - Any Action	**Note:** Affects only MAINVIEW for OS/390. Can the user enter any action from MVScope views? **Default Entity Name:** BBM.MVMVS.&CONTEXT.&INTTABLE.AO **Entity Name after Substitution:** BBM.MVMVS.*targetid*.DCE15.AO
MVScope CCW and I/O data - Table Data	**Note:** Affects only MAINVIEW for OS/390. Can the user access data for MVScope I/O CCW and data views? **Default Entity Name:** BBM.MVMVS.&CONTEXT.&INTTABLE.OD **Entity Name after Substitution:** BBM.MVMVS.*targetid*.DCE2B.OD
MVScope I/O Interrupt - Table Data	**Note:** Affects only MAINVIEW for OS/390. Can the user access data for MVScope I/O interrupt views? **Default Entity Name:** BBM.MVMVS.&CONTEXT.&INTTABLE.OD **Entity Name after Substitution:** BBM.MVMVS.*targetid*.DCE2A.OD
MVScope Messages - Table Data	**Note:** Affects only MAINVIEW for OS/390. Can the user access data for MVScope explanatory texts views? **Default Entity Name:** BBM.MVMVS.&CONTEXT.&INTTABLE.OD **Entity Name after Substitution:** BBM.MVMVS.*targetid*.DC727.OD

Table 16. Resource Definitions for CMF MONITOR and MAINVIEW for OS/390 (Continued)

Resource name in SERDEF view	Resource definition and considerations
MVScope Monitor Set - Table Data	**Note:** Affects only MAINVIEW for OS/390. Can the user access data for MVScope monitor set views? **Default Entity Name:** BBM.MVMVS.&CONTEXT.&INTTABLE.OD **Entity Name after Substitution:** BBM.MVMVS.*targetid*.DCE15.OD
MVScope - Action - STOp a Monitor Set	**Note:** Affects only MAINVIEW for OS/390. Can the user stop a monitor set with the STO line command from the MSLIST view? **Default Entity Name:** BBM.MVMVS.&CONTEXT.&INTTABLE.&INTACTION.OA **Entity Name after Substitution:** BBM.MVMVS.*targetid*.DCE15.STOP.OA
MVScope and MVMVS Jsre-Any Action	**Note:** Affects only MAINVIEW for OS/390. Can the user enter any action from job step views (including M line commands for MVScope)? These views include JSOVER, JSOVERZ, JSUSE, JSUSEZ, JSCPU, JSCPUZ, JSIO, JSIOZ, JSSTOR, JSSTORZ, JSPAGOV, JSPAGOVZ, JSSRM, JSSRMZ, JSTERM, and JSTERMZ. **Default Entity Name:** BBM.MVMVS.&CONTEXT.&INTTABLE.AO **Entity Name after Substitution:** BBM.MVMVS.*targetid*.DCE02.AO
MVScope and MVMVS Dsre-Any Action	**Note:** Affects only MAINVIEW for OS/390. Can the user enter any action from data set level views (including M line commands for MVScope)? These views include DSVOL, DSVOLZ, DSJOB, DSJOBZ, DSDSN, and DSDSNZ. **Default Entity Name:** BBM.MVMVS.&CONTEXT.&INTTABLE.AO **Entity Name after Substitution:** BBM.MVMVS.*targetid*.DCE2E.AO
MVScope and MVMVS Dxre-Any Action	**Note:** Affects only MAINVIEW for OS/390. Can the user enter any action from device views (including M line commands for MVScope)? These views include DEV, DEVZ, DEVSTAT, DEVSTATZ, DEVR, LDEV, PDEV, and SDEV. **Default Entity Name:** BBM.MVMVS.&CONTEXT.&INTTABLE.AO **Entity Name after Substitution:** BBM.MVMVS.*targetid*.DCE22.AO
MVScope and MVMVS Asiw-Any Action	**Note:** Affects only MAINVIEW for OS/390. Can the user enter any action from job views (including M line commands for MVScope)? These views include JCPU, JCPUZ, JCPUR, JIO, JIOZ, JIOR, JOVER, JOVERZ, JOVERR, JPAGDM, JPAGOV, JPAGOVZ, JPAGOVR, JPASW, JPASWZ, JSRM, JSRMZ, JSRMR, JSTOR, JSTORZ, JSTORR, JSUM, JSTAT, JSTASTZ, JUSE, JUSEZ, and JUSER. **Default Entity Name:** BBM.MVMVS.&CONTEXT.&INTTABLE.AO **Entity Name after Substitution:** BBM.MVMVS.*targetid*.DC101.AO

Table 16. Resource Definitions for CMF MONITOR and MAINVIEW for OS/390 (Continued)

Resource name in SERDEF view	Resource definition and considerations
MVScope and MVMVS Wusr-Any Action	**Note:** Affects only MAINVIEW for OS/390. Can the user enter any action from job delay views (including M line commands for MVScope)? These views include JUDEV, JUDEVZ, JDDEV, JDDEVZ, DUJOB, and DDJOB. **Default Entity Name:** BBM.MVMVS.&CONTEXT.&INTTABLE.AO **Entity Name after Substitution:** BBM.MVMVS.*targetid*.DC193.AO
MVScope and MVMVS Asre-Any Action	**Note:** Affects only CMF MONITOR Online. Can the user enter any action from job views (including M line commands for MVScope)? These views include ARD and ARDZ. **Default Entity Name:** BBM.MVMVS.&CONTEXT.&INTTABLE.AO **Entity Name after Substitution:** BBM.MVMVS.*targetid*.DC201.AO
MVScope and MVMVS WusrEnq - Any Action	**Note:** Affects only MAINVIEW for OS/390. Can the user enter any action from ENQ delay views? These views include JDENQ, JDENQZ, JUENQ, and JUENQZ. **Default Entity Name:** BBM.MVMVS.&CONTEXT.&INTTABLE.AO **Entity Name after Substitution:** BBM.MVMVS.*targetid*.DC293.AO
MVScope and MVMVS WusrHSM - Any Action	**Note:** Affects only MAINVIEW for OS/390. Can the user enter any action from HSM delay views? These views include JHSMD, JHSMDZ, and JHSMSTAT. **Default Entity Name:** BBM.MVMVS.&CONTEXT.&INTTABLE.AO **Entity Name after Substitution:** BBM.MVMVS.*targetid*.DC393.AO
MVScope and MVMVS WusrJES- Any Action	**Note:** Affects only MAINVIEW for OS/390. Can the user enter any action from JES delay views? These views include JJESD and JJESDZ. **Default Entity Name:** BBM.MVMVS.&CONTEXT.&INTTABLE.AO **Entity Name after Substitution:** BBM.MVMVS.*targetid*.DC493.OA
MVScope and MVMVS WusrMSG - Any Action	**Note:** Affects only MAINVIEW for OS/390. Can the user enter any action from message delay views? These views include JMSGD and JMSGDZ. **Default Entity Name:** BBM.MVMVS.&CONTEXT.&INTTABLE.AO **Entity Name after Substitution:** BBM.MVMVS.*targetid*.DC593.AO

Table 16. Resource Definitions for CMF MONITOR and MAINVIEW for OS/390 (Continued)

Resource name in SERDEF view	Resource definition and considerations
MVScope and MVMVS WusrWkld - Any Action	**Note:** Affects only MAINVIEW for OS/390. Can the user enter any action from workload delay views? **Default Entity Name:** BBM.MVMVS.&CONTEXT.&INTTABLE.AO **Entity Name after Substitution:** BBM.MVMVS.*targetid*.DC693.AO
MVScope and MVMVS WusrXCF - Any Action	**Note:** Affects only MAINVIEW for OS/390. Can the user enter any action from XCF delay views? These views include JXCFD and JXCFDZ. **Default Entity Name:** BBM.MVMVS.&CONTEXT.&INTTABLE.AO **Entity Name after Substitution:** BBM.MVMVS.*targetid*.DC793.AO
MVScope - Action - MONitor start	**Note:** Affects only MAINVIEW for OS/390. Can the user start an MVScope monitor set with the MON line command from the MSLIST view? **Default Entity Name:** BBM.MVMVS.&CONTEXT.&INTTABLE.&INTACTION.OA **Entity Name after Substitution:** BBM.MVMVS.*targetid*.DCE15.MONITOR.OA
MVScope - Action - M command Dxre	**Note:** Affects only MAINVIEW for OS/390. Can the user start an MVScope monitor set with the M line command on device views? **Default Entity Name:** BBM.MVMVS.&CONTEXT.&INTTABLE.&INTACTION.OA **Entity Name after Substitution:** BBM.MVMVS.*targetid*.DCE22.MLCMD.OA
MVScope - Action - M command Asiw	**Note:** Affects only MAINVIEW for OS/390. Can the user start an MVScope monitor set with the M line command from job views? These views include JCPU, JCPUZ, JCPUR, JIO, JIOZ, JIOR, JOVER, JOVERZ, JOVERR, JPAGDM, JPAGOV, JPAGOVZ, JPAGOVR, JPASW, JPASWZ, JSRM, JSRMZ, JSRMR, JSTOR, JSTORZ, JSTORR, JSUM, JSTAT, JSTASTZ, JUSE, JUSEZ, and JUSER. **Default Entity Name:** BBM.MVMVS.&CONTEXT.&INTTABLE.&INTACTION.OA **Entity Name after Substitution:** BBM.MVMVS.*targetid*.DC101.MLCMD.OA
MVScope - Action - M command Wusr	**Note:** Affects only MAINVIEW for OS/390. Can the user start an MVScope monitor set with the M line command from wait user views? These views include JUDEV, JUDEVZ, JDDEV, JDDEVZ, DUJOB, and DDJOB. **Default Entity Name:** BBM.MVMVS.&CONTEXT.&INTTABLE.&INTACTION.OA **Entity Name after Substitution:** BBM.MVMVS.*targetid*.DC193.MLCMD.OA

Table 16. Resource Definitions for CMF MONITOR and MAINVIEW for OS/390 (Continued)

Resource name in SERDEF view	Resource definition and considerations
MVScope - Action - M command Asre	**Note:** Affects only CMF MONITOR Online. Can the user start an MVScope monitor set with the M line command from job views? These views include ARD and ARDZ. **Default Entity Name:** BBM.MVMVS.&CONTEXT.&INTTABLE.&INTACTION.OA **Entity Name after Substitution:** BBM.MVMVS.*targetid*.DC201.MLCMD.OA
MVScope - Action - M command WusrENQ	**Note:** Affects only MAINVIEW for OS/390. Can the user start an MVScope monitor set with the M line command from wait user ENQ views? These views include JDENQ, JDENQZ, JUENQ, and JUENQZ. **Default Entity Name:** BBM.MVMVS.&CONTEXT.&INTTABLE.&INTACTION.OA **Entity Name after Substitution:** BBM.MVMVS.*targetid*.DC293.MLCMD.OA
MVScope - Action - M command WusrHSM	**Note:** Affects only MAINVIEW for OS/390. Can the user start an MVScope monitor set with the M line command from wait user HSM views? These views include JHSMD, JHSMDZ, and JHSMSTAT. **Default Entity Name:** BBM.MVMVS.&CONTEXT.&INTTABLE.&INTACTION.OA **Entity Name after Substitution:** BBM.MVMVS.*targetid*.DC393.MLCMD.OA
MVScope - Action - M command WusrJES	**Note:** Affects only MAINVIEW for OS/390. Can the user start an MVScope monitor set with the M line command from wait user JES views? These views include JJESD and JJESDZ. **Default Entity Name:** BBM.MVMVS.&CONTEXT.&INTTABLE.&INTACTION.OA **Entity Name after Substitution:** BBM.MVMVS.*targetid*.DC493.MLCMD.OA
MVScope - Action - M command WusrMSG	**Note:** Affects only MAINVIEW for OS/390. Can the user start an MVScope monitor set with the M line command from wait user MSG views? These views include JMSGD and JMSGDZ. **Default Entity Name:** BBM.MVMVS.&CONTEXT.&INTTABLE.&INTACTION.OA **Entity Name after Substitution:** BBM.MVMVS.*targetid*.DC593.MLCMD.OA
MVScope - Action - M command WusrWkld	**Note:** Affects only MAINVIEW for OS/390. Can the user start an MVScope monitor set with the M line command from wait user workload views? **Default Entity Name:** BBM.MVMVS.&CONTEXT.&INTTABLE.&INTACTION.OA **Entity Name after Substitution:** BBM.MVMVS.*targetid*.DC693.MLCMD.OA

Table 16. Resource Definitions for CMF MONITOR and MAINVIEW for OS/390 (Continued)

Resource name in SERDEF view	Resource definition and considerations
MVScope - Action - M command WusrXCF	**Note:** Affects only MAINVIEW for OS/390. Can the user start an MVScope monitor set with the M line command from wait user XCF views? These views include JXCFD and JXCFDZ. **Default Entity Name:** BBM.MVMVS.&CONTEXT.&INTTABLE.&INTACTION.OA **Entity Name after Substitution:** BBM.MVMVS.*targetid*.DC793.MLCMD.OA
MVScope - Action - DELete a Monitor Set	**Note:** Affects only MAINVIEW for OS/390. Can the user stop a monitor set with the DEL line command from the MSLIST view? **Default Entity Name:** BBM.MVMVS.&CONTEXT.&INTTABLE.&INTACTION.OA **Entity Name after Substitution:** BBM.MVMVS.*targetid*.DCE15.DELETE.OA
MVScope - Action - CHAnge a Monitor Set	**Note:** Affects only MAINVIEW for OS/390. Can the user change a monitor set with the CHA line command from the MSLIST view? **Default Entity Name:** BBM.MVMVS.&CONTEXT.&INTTABLE.&INTACTION.OA **Entity Name after Substitution:** BBM.MVMVS.*targetid*.DCE15.CHANGE.OA
MVScope - Action - ADD MS line command	**Note:** Affects only MAINVIEW for OS/390. Can the user add a monitor set with the ADD line command? **Default Entity Name:** BBM.MVMVS.&CONTEXT.&INTTABLE.&INTACTION.OA **Entity Name after Substitution:** BBM.MVMVS.*targetid*.DCE15.ADDLC.OA
MVScope - Action - ADD a Monitor Set	**Note:** Affects only MAINVIEW for OS/390. Can the user add a monitor set with the ADD line command? **Default Entity Name:** BBM.MVMVS.&CONTEXT.&INTTABLE.&INTACTION.OA **Entity Name after Substitution:** BBM.MVMVS.*targetid*.DCE15.ADD.OA
MVScope Named Program Virt Stor - Table Data	**Note:** Affects only MAINVIEW for OS/390. Can the user access data for MVScope-named program virtual storage views? **Default Entity Name:** BBM.MVMVS.&CONTEXT.&INTTABLE.OD **Entity Name after Substitution:** BBM.MVMVS.*targetid*.DC512.OD
MVScope Program Virt Stor - Table Data	**Note:** Affects only MAINVIEW for OS/390. Can the user access data for MVScope program virtual storage views? **Default Entity Name:** BBM.MVMVS.&CONTEXT.&INTTABLE.OD **Entity Name after Substitution:** BBM.MVMVS.*targetid*.DC412.OD

Table 16. Resource Definitions for CMF MONITOR and MAINVIEW for OS/390 (Continued)

Resource name in SERDEF view	Resource definition and considerations
MVScope PSW Sample - Table Data	**Note:** Affects only MAINVIEW for OS/390. Can the user access data for MVScope PSW sample views? **Default Entity Name:** BBM.MVMVS.&CONTEXT.&INTTABLE.OD **Entity Name after Substitution:** BBM.MVMVS.*targetid*.DCE14.OD
MVScope Time Buckets - Table Data	**Note:** Affects only MAINVIEW for OS/390. Can the user access data for MVScope time bucket views? **Default Entity Name:** BBM.MVMVS.&CONTEXT.&INTTABLE.OD **Entity Name after Substitution:** BBM.MVMVS.*targetid*.DCE1E.OD
MVScope Time 8 Buckets - Table Data	**Note:** Affects only MAINVIEW for OS/390. Can the user access data for MVScope time 8 bucket views? **Default Entity Name:** BBM.MVMVS.&CONTEXT.&INTTABLE.OD **Entity Name after Substitution:** BBM.MVMVS.*targetid*.DCE1F.OD
MVScope Virtual Storage - Table Data	**Note:** Affects only MAINVIEW for OS/390. Can the user access data for MVScope virtual storage views? **Default Entity Name:** BBM.MVMVS.&CONTEXT.&INTTABLE.OD **Entity Name after Substitution:** BBM.MVMVS.*targetid*.DC112.OD
MVScope Volume Extent - Table Data	**Note:** Affects only MAINVIEW for OS/390. Can the user access data for MVScope volume extent views? **Default Entity Name:** BBM.MVMVS.&CONTEXT.&INTTABLE.OD **Entity Name after Substitution:** BBM.MVMVS.*targetid*.DCE2C.OD
Page Dataset - Table Data	Can the user access page data set data? **Default Entity Name:** BBM.MVMVS.&CONTEXT.&INTTABLE.OD **Entity Name after Substitution:** BBM.MVMVS.*targetid*.DCE06.OD
Summary - Table Data	Can the user access summary data? **Default Entity Name:** BBM.MVMVS.&CONTEXT.&INTTABLE.OD **Entity Name after Substitution:** BBM.MVMVS.*targetid*.DCE38.OD
Swap Dataset - Table Data	Can the user access swap data set data? **Default Entity Name:** BBM.MVMVS.&CONTEXT.&INTTABLE.OD **Entity Name after Substitution:** BBM.MVMVS.*targetid*.DCE07.OD

Table 16. Resource Definitions for CMF MONITOR and MAINVIEW for OS/390 (Continued)

Resource name in SERDEF view	Resource definition and considerations
System CPU - Table Data	Can the user access system CPU data? **Default Entity Name:** BBM.MVMVS.&CONTEXT.&INTTABLE.OD **Entity Name after Substitution:** BBM.MVMVS.*targetid*.DCE35.OD
System Paging - Table Data	Can the user access system paging data? **Default Entity Name:** BBM.MVMVS.&CONTEXT.&INTTABLE.OD **Entity Name after Substitution:** BBM.MVMVS.*targetid*.DCE36.OD
System Swap - Table Data	Can the user access system swap data? **Default Entity Name:** BBM.MVMVS.&CONTEXT.&INTTABLE.OD **Entity Name after Substitution:** BBM.MVMVS.*targetid*.DCE37.OD
SMS Storage Group - Table Data	Can the user access SMS storage group data? **Default Entity Name:** BBM.MVMVS.&CONTEXT.&INTTABLE.OD **Entity Name after Substitution:** BBM.MVMVS.*targetid*.DCE03.OD
SPDataSpace - View - Contents	Can the user view data from data spaces? **Default Entity Name:** BBM.MVMVS.&CONTEXT.&INTTABLE.OD **Entity Name after Substitution:** BBM.MVMVS.*targetid*.DD100.OD
SPDataSpace - Any Action	Can the user enter any action from data space views? **Default Entity Name:** BBM.MVMVS.&CONTEXT.&INTTABLE.AO **Entity Name after Substitution:** BBM.MVMVS.*targetid*.D1000.AO
SPDataSpace - Action - Change Offset	Can the user change offset of contents being displayed in data space views? **Note:** This resource definition has been turned off under SERDEF. **Default Entity Name:** BBM.MVMVS.&CONTEXT.&INTTABLE.&INTACTION.OA **Entity Name after Substitution:** BBM.MVMVS.*targetid*.DD100.OFFSET.OA
SPDataSpace - Action - Zap Contents	Can the user alter storage from data space views? **Default Entity Name:** BBM.MVMVS.&CONTEXT.&INTTABLE.&INTACTION.OA **Entity Name after Substitution:** BBM.MVMVS.*targetid*.DD100.CONTENTS.OA
SPDataSpace - Action - Cancel Changes	Can the user cancel changes made to contents of data space views? **Note:** This resource definition has been turned off under SERDEF. **Default Entity Name:** BBM.MVMVS.&CONTEXT.&INTTABLE.&INTACTION.OA **Entity Name after Substitution:** BBM.MVMVS.*targetid*.DD100.CANCEL.OA
SRM Domain - Table Data	Can the user access SRM domain data? **Default Entity Name:** BBM.MVMVS.&CONTEXT.&INTTABLE.OD **Entity Name after Substitution:** BBM.MVMVS.*targetid*.DCE29.OD

Table 16. Resource Definitions for CMF MONITOR and MAINVIEW for OS/390 (Continued)

Resource name in SERDEF view	Resource definition and considerations
Workload - Table Data	Can the user access workload data? **Default Entity Name:** BBM.MVMVS.&CONTEXT.&INTTABLE.OD **Entity Name after Substitution:** BBM.MVMVS.*targetid*.DCE0E.OD
Workload - WLM Ext Period - Table Data	**Note:** Affects only CMF MONITOR (5.2.3 and later) and MAINVIEW for OS/390 (2.4.2 and later). Can the user access workload data for WLM Extend Period views? **Default Entity Name:** BBM.MVMVS.&CONTEXT.&INTTABLE.OD **Entity Name after Substitution:** BBM.MVMVS.*targetid*.DCE47.OD
Workload - WLM period - Table Data	**Note:** Affects only CMF MONITOR (5.2.3 and later) and MAINVIEW for OS/390 (2.4.2 and later). Can the user access workload data for WLM period views? **Default Entity Name:** BBM.MVMVS.&CONTEXT.&INTTABLE.OD **Entity Name after Substitution:** BBM.MVMVS.*targetid*.DCE43.OD
Workload - WLM Server - Table Data	Can the user access workload data for WLM server views? **Default Entity Name:** BBM.MVMVS.&CONTEXT.&INTTABLE.OD **Entity Name after Substitution:** BBM.MVMVS.*targetid*.DCE44.OD
Workload - WLM Subsystem - Table Data	Can the user access workload data for WLM subsystem views? **Default Entity Name:** BBM.MVMVS.&CONTEXT.&INTTABLE.OD **Entity Name after Substitution:** BBM.MVMVS.*targetid*.DCE45.OD
XCF Member - Table Data	Can the user access data for XCF Member views? **Default Entity Name:** BBM.MVMVS.&CONTEXT.&INTTABLE.OD **Entity Name after Substitution:** BBM.MVMVS.*targetid*.DCE52.OD
XCF Path - Table Data	Can the user access data for XCF Path views? **Default Entity Name:** BBM.MVMVS.&CONTEXT.&INTTABLE.OD **Entity Name after Substitution:** BBM.MVMVS.*targetid*.DCE50.OD
XCF System - Table Data	Can the user access data for XCF System views? **Default Entity Name:** BBM.MVMVS.&CONTEXT.&INTTABLE.OD **Entity Name after Substitution:** BBM.MVMVS.*targetid*.DCE51.OD

MAINVIEW Alarm Manager Resources

To disable, enable, or customize resource access authorization requests to the ESM for a MAINVIEW Alarm Manager security resource:

- Display the SERDEFL view in MAINVIEW Alarm Manager, as described in "Displaying a List of Members using the SERDEFL View" on page 186.
- Select the member you want to change that has a **Product** field of `MVALARM` or `MVALERT`.

A total of four unique entity names control all MAINVIEW Alarm Manager resources. To enable or disable all security for MAINVIEW Alarm Manager, you need only disable or enable the following high-level resources.

- Default - Table Data
- Default - Any Table Actions
- Default - Specific Table Action
- Any Action (MVALARM or MVALERT views)

The following tables list all the resources that are protected by MAINVIEW Alarm Manager:

- Table 17 lists the Alarm Administration resources (MVALARM service point)
- Table 18 on page 237 lists the Alert Management resources (MVALERT service point)

The **Default Entity Name** is the entity name shared by a set of similar resources and is used for high-level control of the entire set. The **Entity Name after Substitution** is the entity name with any subsituted symbolic values for a particular resource. For a description of how the symbolics are used, see page 133.

The class name for all resources, unless otherwise indicated, is `$BBM`, which is automatically transformed to external resource class `FACILITY`.

Table 17. Resource Definitions for MAINVIEW Alarm Manager - Alarm Administration

Resource name in SERDEF view	Resource definition and considerations
Default - Table Data	Can the user access an Alarm Administration view? This default resource controls a subset of similar resources. Enabling, disabling or changing this resource automatically enables, disables, or changes all resources with the following default entity name. Specific resources belonging to this subset can be enabled, disabled, or changed on an individual basis. **Default Entity Name:** BBM.&PRODUCT.&CONTEXT.&INTTABLE.OD **Entity Name after Substitution:** BBM.MVALARM.*targetid*.@DFLT.OD
Default - Any Table Actions	Can the user enter a view action for the current Alarm Administration view? **Default Entity Name:** BBM.&PRODUCT.&CONTEXT.&INTTABLE.AO **Entity Name after Substitution:** BBM.MVALARM.*targetid*.*tableid*.AO

Table 17. Resource Definitions for MAINVIEW Alarm Manager - Alarm Administration (Continued)

Resource name in SERDEF view	Resource definition and considerations
Default - Alter Data Set	Can the user access an Alarm Administration data set? **Class Name:** DATASET **Entity Name:** &DSN
Default - Specific Table Action	Can the user enter specific view commands from Alarm Administration views? **Default Entity Name:** BBM.&PRODUCT.&CONTEXT.&INTTABLE.&INTACTION.OA **Entity Name after Substitution:** BBM.MVALARM.*targetid*.*tableid. actionid*.OA
Any Action - (Alarm Administration Views)	Can the user enter a view action in the current Alarm Administration view? **Default Entity Name:** BBM.&PRODUCT.&CONTEXT.AA **Entity Name after Substitution:** BBM.MVALARM.*targetid*.AA
Alarm Definitions - Alter Data Set	Can the user access an Alarm Administration data set where alarm definitions reside? **Class Name:** DATASET **Entity Name:** &DSN
Alarm Groups - Table Data	Can the user access data for alarm group and alarm definition views? **Default Entity Name:** BBM.&PRODUCT.&CONTEXT.&INTTABLE.OD **Entity Name after Substitution:** BBM.MVALARM.*targetid*.HAA20.OD
Alarm Groups - Action - Enable/Disable	Can the user change the runtime status of alarm groups? **Default Entity Name:** BBM.&PRODUCT.&CONTEXT.&INTTABLE.&INTACTION.OA **Entity Name after Substitution:** BBM.MVALARM.*targetid*.HAA20.GRPRTSTC.OA
Alarm Groups - Action - Rename	Can the user enter the R (RENAME) line command in the ALGLST01 view? **Default Entity Name:** BBM.&PRODUCT.&CONTEXT.&INTTABLE.&INTACTION.OA **Entity Name after Substitution:** BBM.MVALARM.*targetid*.HAA20.GRPRNM.OA
Alarm Groups - Action - Install	Can the user enter the INSTall primary command in the ALGEDI01 view? **Default Entity Name:** BBM.&PRODUCT.&CONTEXT.&INTTABLE.&INTACTION.OA **Entity Name after Substitution:** BBM.MVALARM.*targetid*.HAA20.GRPRINST.OA
Alarm Groups - Action - Force Delete	Can the user enter the F (FORCE) line command in the ALGLST01 view? **Default Entity Name:** BBM.&PRODUCT.&CONTEXT.&INTTABLE.&INTACTION.OA **Entity Name after Substitution:** BBM.MVALARM.*targetid*.HAA20.GRPRFORCE.OA
Alarm Groups - Action - Delete	Can the user enter the D (DELETE) line command in the ALGLST01 view? **Default Entity Name:** BBM.&PRODUCT.&CONTEXT.&INTTABLE.&INTACTION.OA **Entity Name after Substitution:** BBM.MVALARM.*targetid*.HAA20.GRPDEL.OA

Table 17. Resource Definitions for MAINVIEW Alarm Manager - Alarm Administration (Continued)

Resource name in SERDEF view	Resource definition and considerations
Alarm Groups - Action - Copy	Can the user enter the C (COPY) line command in the ALGLST01 view? **Default Entity Name:** BBM.&PRODUCT.&CONTEXT.&INTTABLE.&INTACTION.OA **Entity Name after Substitution:** BBM.MVALARM.*targetid*.HAA20.GRPCOPY.OA
Alarm Groups - Action - Add	Can the user enter the A (ADD) line command in the ALGLST01 view? **Default Entity Name:** BBM.&PRODUCT.&CONTEXT.&INTTABLE.&INTACTION.OA **Entity Name after Substitution:** BBM.MVALARM.*targetid*.HAA20.GRPADD.OA
Alarm Groups/ Definitions - Any Action	Can the user enter actions for alarm group or definition views? **Default Entity Name:** BBM.&PRODUCT.&CONTEXT.&INTTABLE.AO **Entity Name after Substitution:** BBM.MVALARM.*targetid*.HAA80.AO
Alarm Definitions - Table Data	Can the user access data for alarm group and alarm definition views? **Default Entity Name:** BBM.&PRODUCT.&CONTEXT.&INTTABLE.OD **Entity Name after Substitution:** BBM.MVALARM.*targetid*.HAA10.OD
Alarm Definitions - Action - Save (UPD)	Can the user enter the SAVE primary command in the ALGEDI01 and ALMEDI01 views? **Default Entity Name:** BBM.&PRODUCT.&CONTEXT.&INTTABLE.&INTACTION.OA **Entity Name after Substitution:** BBM.MVALARM.*targetid*.HAA10.DEFUPD.OA
Alarm Definitions - Action - Enable/Disable	Can the user change the runtime status of alarm definitions? **Default Entity Name:** BBM.&PRODUCT.&CONTEXT.&INTTABLE.&INTACTION.OA **Entity Name after Substitution:** BBM.MVALARM.*targetid*.HAA10.DEFRTSTC.OA
Alarm Definitions - Action - Rename	Can the user enter the R (RENAME) line command in the ALMLST01 view? **Default Entity Name:** BBM.&PRODUCT.&CONTEXT.&INTTABLE.&INTACTION.OA **Entity Name after Substitution:** BBM.MVALARM.*targetid*.HAA10.DEFRNM.OA
Alarm Definitions - Action - Install Primary Command	Can the user enter the INSTall primary command in the alarm group and alarm definition views? **Default Entity Name:** BBM.&PRODUCT.&CONTEXT.&INTTABLE.&INTACTION.OA **Entity Name after Substitution:** BBM.MVALARM.*targetid*.HAA10.DEFINST.OA
Alarm Definitions - Action - Install Line Command	Can the user enter the I (INSTALL) line command in the ALMLST01 view? **Default Entity Name:** BBM.&PRODUCT.&CONTEXT.&INTTABLE.&INTACTION.OA **Entity Name after Substitution:** BBM.MVALARM.*targetid*.HAA10.DEFINST.OA
Alarm Definitions - Action - Delete	Can the user enter the D (DELETE) line command in the ALMLST01 view? **Default Entity Name:** BBM.&PRODUCT.&CONTEXT.&INTTABLE.&INTACTION.OA **Entity Name after Substitution:** BBM.MVALARM.*targetid*.HAA10.DEFDEL.OA

Table 17. Resource Definitions for MAINVIEW Alarm Manager - Alarm Administration (Continued)

Resource name in SERDEF view	Resource definition and considerations
Alarm Definitions - Action - Copy	Can the user enter the C (COPY) line command in the ALMLST01 view? **Default Entity Name:** BBM.&PRODUCT.&CONTEXT.&INTTABLE.&INTACTION.OA **Entity Name after Substitution:** BBM.MVALARM.*targetid*.HAA10.DEFCOPY.OA
Alarm Definitions - Action - Save (ADD)	Can the user enter the SAVE primary command in the ALMADD01 view? **Default Entity Name:** BBM.&PRODUCT.&CONTEXT.&INTTABLE.&INTACTION.OA **Entity Name after Substitution:** BBM.MVALARM.*targetid*.HAA10.DEFADD.OA
Alarm Messages - Table Data	Can the user access data for alarm message views? **Default Entity Name:** BBM.&PRODUCT.&CONTEXT.&INTTABLE.OD **Entity Name after Substitution:** BBM.MVALARM.*targetid*.HAA30.OD
Alarm Thresholds - Table Data	Can the user access data for alarm group and alarm definition threshold views? **Default Entity Name:** BBM.&PRODUCT.&CONTEXT.&INTTABLE.OD **Entity Name after Substitution:** BBM.MVALARM.*targetid*.HAA80.OD

Table 18 lists the MAINVIEW Alarm Manager Alert Management resources.

Table 18. Resource Definitions for MAINVIEW Alarm Manager - Alert Management

Resource name in SERDEF view	Resource definition and considerations
Default - Table Data	Can the user access an Alert Management view? This default resource controls a subset of similar resources. Enabling, disabling or changing this resource automatically enables, disables, or changes all resources with the following default entity name. Specific resources belonging to this subset can be enabled, disabled, or changed on an individual basis. **Default Entity Name:** BBM.&PRODUCT.&CONTEXT.&INTTABLE.OD **Entity Name after Substitution:** BBM.MVALERT.*targetid*.@DFLT.OD
Default - Any Table Actions	Can the user enter a view action for the current Alert Management view? **Default Entity Name:** BBM.&PRODUCT.&CONTEXT.&INTTABLE.AO **Entity Name after Substitution:** BBM.MVALERT.*targetid.tableid.*AO
Default - Specific Table Action	Can the user enter specific view commands from Alert Management views? **Default Entity Name:** BBM.&PRODUCT.&CONTEXT.&INTTABLE.&INTACTION.OA **Entity Name after Substitution:** BBM.MVALERT.*targetid.tableid. actionid*.OA
Any Action - (Alert Management Views)	Can the user enter a view action in the current Alert Management view? **Default Entity Name:** BBM.&PRODUCT.&CONTEXT.AA **Entity Name after Substitution:** BBM.MVALERT.*targetid*.AA

Table 18. Resource Definitions for MAINVIEW Alarm Manager - Alert Management (Continued)

Resource name in SERDEF view	Resource definition and considerations
Alert Information - Table Data	Can the user access data for Alert Management alert information views? **Default Entity Name:** BBM.&PRODUCT.&CONTEXT.&INTTABLE.OD **Entity Name after Substitution:** BBM.MVALERT.*targetid*.OA010.OD
Alert Information - Any Action	Can the user enter actions for Alert Management alert information views? **Default Entity Name:** BBM.&PRODUCT.&CONTEXT.&INTTABLE.AO **Entity Name after Substitution:** BBM.MVALERT.*targetid*.OA010.AO
Alert Information - Action - Invoke Followup EXEC	Can the user invoke the followup EXEC for an alert? **Default Entity Name:** BBM.&PRODUCT.&CONTEXT.&INTTABLE.&INTACTION.OA **Entity Name after Substitution:** BBM.MVALERT.*targetid*.OA010.ALERTRSP.OA
Alert Information - Action - Delete by Queue Name	Can the user delete an alert based on the alert queue name? **Default Entity Name:** BBM.&PRODUCT.&CONTEXT.OAA10.#ALREQNAM.OA **Entity Name after Substitution:** BBM.MVALERT.*targetid*.OA010.*value*.OA where *value* represents what is actually displayed in the Alert Queue field of the ALERTS, ALERTSP, or ALERTSQ view.
Alert Queues - Table Data	Can the user access data for Alert Management alert queue views? **Default Entity Name:** BBM.&PRODUCT.&CONTEXT.&INTTABLE.&INTACTION.OA **Entity Name after Substitution:** BBM.MVALERT.*targetid*.OA020.OD
Alert Queues - Any Action	Can the user enter actions for Alert Management alert queue views? **Default Entity Name:** BBM.&PRODUCT.&CONTEXT.&INTTABLE.AO **Entity Name after Substitution:** BBM.MVALERT.*targetid*.OA020.AO
Alert Queues - Action - Delete an Alert Queue	Can the user delete an alert queue? **Default Entity Name:** BBM.&PRODUCT.&CONTEXT.&INTTABLE.&INTACTION.OA **Entity Name after Substitution:** BBM.MVALERT.*targetid*.OA020.QUEUEDEL.OA
Alert Queues - Action - Delete by Queue Name	Can the user delete an alert queue based on the queue name? **Default Entity Name:** BBM.&PRODUCT.&CONTEXT.OAA20.#AQREQNAM.OA **Entity Name after Substitution:** BBM.MVALERT.*targetid*.OA020.*value*.OA where *value* represents what is actually displayed in the Queue field of the ALERTQ view.

MAINVIEW Explorer

To disable, enable, or customize resource access authorization requests to the ESM for a MAINVIEW Explorer security resource:

- Display the SERDEFL view in MAINVIEW Explorer, as described in "Displaying a List of Members using the SERDEFL View" on page 186.
- Select the member you want to change that has a **Product** field of `MVEXP`.

A single unique entity name controls all MAINVIEW Explorer resources. To enable or disable all security for MAINVIEW Explorer, you need only disable or enable the following high-level resource.

- Default - Table Data

The following table lists all resources that are protected by MAINVIEW Explorer. The **Default Entity Name** is the entity name shared by a set of similar resources and is used for high-level control of the entire set. The **Entity Name after Substitution** is the entity name with any subsituted symbolic values for a particular resource. For a description of how the symbolics are used, see page 133.

The class name for all resources, unless otherwise indicated, is `$BBM`, which is automatically transformed to external resource class `FACILITY`.

Table 19. Resource Definitions for MAINVIEW Explorer

Resource name in SERDEF view	Resource definition and considerations
Server Info - Table Data	Can the user view MAINVIEW Host Server information? **Default Entity Name:** BBW.&PRODUCT.&CONTEXT.&INTTABLE.OD **Entity Name after Substitution:** BBW.MVEXP.*targetid*.WIF01.OD
Session Info - Table Data	Can the user view client session information from the MAINVIEW Host Server? **Default Entity Name:** BBM.&PRODUCT.&CONTEXT.&INTTABLE.OD **Entity Name after Substitution:** BBW.MVEXP.*targetid*.WIF10.OD

MAINVIEW for CICS Resources

To disable, enable, or customize resource access authorization requests to the ESM for a MAINVIEW for CICS security resource:

- Display the SERDEFL view in MAINVIEW for CICS, as described in "Displaying a List of Members using the SERDEFL View" on page 186.
- Select the member you want to change that has a **Product** field of `MVCICS`.

A total of five unique entity names control all MAINVIEW for CICS resources. To enable or disable all security for MAINVIEW for CICS, you need only disable or enable the following high-level resources.

- Default - Table Data
- Default - Any Table Actions
- Default - Alter Data Set
- Default - Specific Table Action
- Any Action (MVCICS Views)

Table 20 on page 241 lists all resources that are protected by MAINVIEW for CICS. The **Default Entity Name** is the entity name shared by a set of similar resources and is used for high-level control of the entire set. The **Entity Name after Substitution** is the entity name with any subsituted symbolic values for a particular resource. For a description of how the symbolics are used, see page 133.

The class name for all resources, unless otherwise indicated, is `$BBM`, which is usually, and by default, transformed to external resource class `FACILITY`.

Actions Common to Windows Mode, Full-Screen Mode and MAINVIEW AutoOPERATOR

Some of the MAINVIEW for CICS actions are common to

- MAINVIEW for CICS windows mode views
- MAINVIEW for CICS full-screen mode displays
- MAINVIEW AutoOPERATOR IMFEXEC API and Rule Processor

Traditionally, these actions were protected only by the facilities of MAINVIEW basic security. Now, however, resource definitions for these actions are provided under both basic and enhanced security. The names of resources that are protected by basic security have a different format than the names that are used for enhanced security. For consistency, the enhanced security definitions for these actions use the same format as their basic security counterparts. For example, the resource definition for the acquire connection action is

`BBM.`*`bbissid`*`.CICS.`*`targetid`*`.ALTCONN.ACQCONN`

By default, the enhanced security definitions for these common actions are disabled because the related action is protected by basic security. If you want to enable enhanced security for these actions, consider the following:

- Under basic security the default resource name prefix is BBM. However, this prefix can be changed by using the basic security member BBSEC. Under enhanced security, the prefix of BBM can not be changed.

- Under basic security the default resource class is $BOOLE. Again, this name can be changed by using the basic security member BBSEC. Under enhanced security, the resource class is $BBM, which by default is transformed to FACILITY.

Table 20 lists the resources that are protected by MAINVIEW for CICS.

Table 20. Resource Definitions for MAINVIEW for CICS

Resource name in SERDEF view	**Resource definition and considerations**
Default - Table Data	Can the user access MAINVIEW for CICS views? **Default Entity Name:** BBM.&PRODUCT.&CONTEXT.&INTTABLE.OD **Entity Name after Substitution:** BBM.MVCICS.*targetid*.*tableid*.OD
Default - Any Table Actions	Can the user enter any action commands from MAINVIEW for CICS views? **Default Entity Name:** BBM.&PRODUCT.&CONTEXT.&INTTABLE.AO **Entity Name after Substitution:** BBM.MVCICS.*targetid*.*tableid*.AO
Default - Alter Data Set	Can the user alter MAINVIEW for CICS data sets? **Entity Name:** &DSN
Default - Specific Table Action	Can the user enter specific action commands from MAINVIEW for CICS views? **Default Entity Name:** BBM.&PRODUCT.&CONTEXT.&INTTABLE.&INTACTION.OA **Entity Name after Substitution:** BBM.MVCICS.*targetid*.*tableid*.*actionid*.OA
Any Action - (MAINVIEW for CICS Views)	Can the user enter any action command from MAINVIEW for CICS views? **Default Entity Name:** BBM.&PRODUCT.&CONTEXT.AA **Entity Name after Substitution:** BBM.MVCICS.*targetid*.AA
Active Delay Analysis - Table Data	Can the user access active CICS delay analysis table data? **Default Entity Name:** BBM.&PRODUCT.&CONTEXT.&INTTABLE.OD **Entity Name after Substitution:** BBM.MVCICS.*targetid*.KRDA0.OD
Active Delay Analysis - Any Action	Can the user issue any action commands from the CDLYACT views? **Default Entity Name:** BBM.&PRODUCT.&CONTEXT.&INTTABLE.AO **Entity Name After Substitution:** BBM.MVCICS.*targetid*.KRDA0.AO
Active Delay Analysis - Action - Stop	Can the user issue the STO command from the CDLYACT views to stop a delay analysis monitor? **Default Entity Name:** BBM.&PRODUCT.&CONTEXT.&INTTABLE.&INTACTION.OA **Entity Name After Substitution:** BBM.MVCICS.*targetid*.KRDA0.STOP.OA
Active Delay Analysis - Action - Purge	Can the user issue the PUR command from the CDLYACT views to purge a delay analysis monitor? **Default Entity Name:** BBM.&PRODUCT.&CONTEXT.&INTTABLE.&INTACTION.OA **Entity Name After Substitution:** BBM.MVCICS.*targetid*.KRDA0.PURGE.OA

Table 20. Resource Definitions for MAINVIEW for CICS (Continued)

Resource name in SERDEF view	Resource definition and considerations
Application Monitor - Table Data	Can the user access application monitor table data? **Default Entity Name:** BBM.&PRODUCT.&CONTEXT.&INTTABLE.OD **Entity Name after Substitution:** BBM.MVCICS.*targetid*.KAA1Q.OD
Application Workload - Table Data	Can the user access application workload table data? **Default Entity Name:** BBM.&PRODUCT.&CONTEXT.&INTTABLE.OD **Entity Name after Substitution:** BBM.MVCICS.*targetid*.KAB10.OD
Auto Init Descs - Table Data	Can the user access CICS auto initiator descriptor (AID) table data? **Default Entity Name:** BBM.&PRODUCT.&CONTEXT.&INTTABLE.OD **Entity Name after Substitution:** BBM.MVCICS.*targetid*.KTE70.OD
Auto Init Descs - Any Action	Can the user issue any action commands from the CAIDS views? **Default Entity Name:** BBM.&PRODUCT.&CONTEXT.&INTTABLE.AO **Entity Name After Substitution:** BBM.MVCICS.*targetid*.KTE70.AO
Auto Init Descs - Action – Purge	Can the user issue the PUR command from the CAIDS views to purge an AID? **Default Entity Name:** BBM.&SERVER.CICS.&CONTEXT.ALTAID.PURGAID **Entity Name After Substitution:** BBM.*bbissid*.CICS.*targetid*.ALTAID.PURGAID
Connection - Table Data	Can the user access CICS connection table data? **Default Entity Name:** BBM.&PRODUCT.&CONTEXT.&INTTABLE.OD **Entity Name after Substitution:** BBM.MVCICS.*targetid*.KTAC0.OD
Connection - Any Action	Can the user issue any action commands from the CCONN views? **Default Entity Name:** BBM.&PRODUCT.&CONTEXT.&INTTABLE.AO **Entity Name After Substitution:** BBM.MVCICS.*targetid*.KTAC0.AO
Connection - Action – Acquire	Can the user issue the ACQ command from the CCONN views to acquire a CICS connection? **Default Entity Name:** BBM.&SERVER.CICS.&CONTEXT.ALTCONN.ACQCONN **Entity Name After Substitution:** BBM.*bbissid*.CICS.*targetid*.ALTCONN.ACQCONN
Connection - Action – InService	Can the user issue the INS command from the CCONN views to set a CICS connection in service? **Default Entity Name:** BBM.&SERVER.CICS.&CONTEXT.ALTCONN.INSCONN **Entity Name After Substitution:** BBM.*bbissid*.CICS.*targetid*.ALTCONN.INSCONN
Connection - Action – NotPend	Can the user issue the NOT command from the CCONN views to set a CICS connection to NOTPEND? **Default Entity Name:** BBM.&SERVER.CICS.&CONTEXT.ALTCONN.NOTCONN **Entity Name After Substitution:** BBM.*bbissid*.CICS.*targetid*.ALTCONN.NOTCONN

Table 20. Resource Definitions for MAINVIEW for CICS (Continued)

Resource name in SERDEF view	Resource definition and considerations
Connection - Action – OutService	Can the user issue the OUT command from the CCONN views to set a CICS connection out of service? **Default Entity Name:** BBM.&SERVER.CICS.&CONTEXT.ALTCONN.OUTCONN **Entity Name After Substitution:** BBM.*bbissid*.CICS.*targetid*.ALTCONN.OUTCONN
Connection - Action – Purge	Can the user issue the PUR command from the CCONN views to purge a CICS connection? **Default Entity Name:** BBM.&SERVER.CICS.&CONTEXT.ALTCONN.PURCONN **Entity Name After Substitution:** BBM.*bbissid*.CICS.*targetid*.ALTCONN.PURCONN
Connection - Action – Release	Can the user issue the REL command from the CCONN views to release a CICS connection? **Default Entity Name:** BBM.&SERVER.CICS.&CONTEXT.ALTCONN.RELCONN **Entity Name After Substitution:** BBM.*bbissid*.CICS.*targetid*.ALTCONN.RELCONN
CORT - Table Data	Can the user access components of response time (CORT) table data? **Default Entity Name:** BBM.&PRODUCT.&CONTEXT.&INTTABLE.OD **Entity Name after Substitution:** BBM.MVCICS.*targetid*.KCA10.OD
Cplng Fac TS Queues - Table Data	Can the user access CICS coupling facility temporary storage queues table data? **Default Entity Name:** BBM.&PRODUCT.&CONTEXT.&INTTABLE.OD **Entity Name after Substitution:** BBM.MVCICS.*targetid*.KTE90.OD
Cplng Fac TS Queues - Any Action	Can the user issue any action commands from the TSQUECF views? **Default Entity Name:** BBM.&PRODUCT.&CONTEXT.&INTTABLE.AO **Entity Name After Substitution:** BBM.MVCICS.*targetid*.KTE90.AO
Cplng Fac TS Queues - Action – Purge	Can the user issue the PUR command from the TSQUECF views to purge a CICS shared temporary storage queue? **Default Entity Name:** BBM.&SERVER.CICS.&CONTEXT.ALTTSUT.PURGETS **Entity Name After Substitution:** BBM.*bbissid*.CICS.*targetid*.ALTTSUT.PURGETS
Delay Analysis - Table Data	Can the user access CICS delay analysis table data? **Default Entity Name:** BBM.&PRODUCT.&CONTEXT.&INTTABLE.OD **Entity Name after Substitution:** BBM.MVCICS.*targetid*.KRDB0.OD
Delay Analysis Def - Table Data	Can the user access CICS delay analysis monitor definition table data? **Default Entity Name:** BBM.&PRODUCT.&CONTEXT.&INTTABLE.OD **Entity Name after Substitution:** BBM.MVCICS.*targetid*.KRDD0.OD
Delay Analysis Def - Any Action	Can the user issue any action commands from the CDLYDEF views? **Default Entity Name:** BBM.&PRODUCT.&CONTEXT.&INTTABLE.AO **Entity Name After Substitution:** BBM.MVCICS.*targetid*.KRDD0.AO

Table 20. Resource Definitions for MAINVIEW for CICS (Continued)

Resource name in SERDEF view	Resource definition and considerations
Delay Analysis Def - Action - Edit	Can the user issue the EDIT command from the CDLYDEF views to lock the definition data set and make modifications to any of its delay analysis definitions? **Default Entity Name:** BBM.&PRODUCT.&CONTEXT.&INTTABLE.&INTACTION.OA **Entity Name After Substitution:** BBM.MVCICS.*targetid*.KRDD0.EDIT.OA
Delay Analysis Def - Action - Alter Data Set	Can the user issue the SAVE command from the CDLYDEF views to update the definition data set? **Default Entity Name:** BBM.&PRODUCT.&CONTEXT.&INTTABLE.&INTACTION.OA **Entity Name After Substitution:** BBM.MVCICS.*targetid*.KRDD0.ALT#DS.OA
Delay Analysis Def - Action - Install	Can the user issue the INS command from the CDLYDEF views to install a delay analysis monitor? **Default Entity Name:** BBM.&PRODUCT.&CONTEXT.&INTTABLE.&INTACTION.OA **Entity Name After Substitution:** BBM.MVCICS.*targetid*.KRDD0.INSTALL.OA
Dump Codes - Table Data	Can the user access CICS dump code table data? **Default Entity Name:** BBM.&PRODUCT.&CONTEXT.&INTTABLE.OD **Entity Name after Substitution:** BBM.MVCICS.*targetid*.KTEA0.OD
Dump Codes - Any Action	Can the user issue any action commands from the CDUMPCD views? **Default Entity Name:** BBM.&PRODUCT.&CONTEXT.&INTTABLE.AO **Entity Name After Substitution:** BBM.MVCICS.*targetid*.KTEA0.AO
Dump Codes - Action - Add	Can the user issue the ADD line command to add a new CICS dump code? **Default Entity Name:** BBM.&PRODUCT.&CONTEXT.&INTTABLE.&INTACTION.OA **Entity Name after Substitution:** BBM.MVCICS.*targetid*.KTEA0.ADD.OA
Dump Codes - Action - Remove	Can the user issue the REM line command to remove a CICS dump code? **Default Entity Name:** BBM.&PRODUCT.&CONTEXT.&INTTABLE.&INTACTION.OA **Entity Name after Substitution:** BBM.MVCICS.*targetid*.KTEA0.REMOVE.OA
Dump Codes - Action – Reset	Can the user issue the RES command from the CDUMPCD views to reset the count of dumps that were taken for a CICS dump code? **Default Entity Name:** BBM.&SERVER.CICS.&CONTEXT.SETDMPC.RESET **Entity Name After Substitution:** BBM.*bbissid*.CICS.*targetid*.SETDMPC.RESET
Dump Codes - Action – Set DAE Opt	Can the user issue the SET command from the CDUMPCD views to modify the DAE option for a CICS dump code? **Default Entity Name:** BBM.&SERVER.CICS.&CONTEXT.SETDMPC.DAEOPT **Entity Name After Substitution:** BBM.*bbissid*.CICS.*targetid*.SETDMPC.DAEOPT

Table 20. Resource Definitions for MAINVIEW for CICS (Continued)

Resource name in SERDEF view	Resource definition and considerations
Dump Codes - Action – Set Dump Scope	Can the user issue the SET command from the CDUMPCD views to modify the scope of dumps that are taken for a CICS dump code? **Default Entity Name:** BBM.&PRODUCT.&CONTEXT.&INTTABLE.&INTACTION.OA **Entity Name After Substitution:** BBM.MVCICS.*targetid*.KTEA0.SDMPSCPE.OA
Dump Codes - Action – Set Max Dump	Can the user issue the SET command from the CDUMPCD views to modify the maximum number of times a CICS dump will be taken for a CICS dump code? **Default Entity Name:** BBM.&SERVER.CICS.&CONTEXT.SETDMPC.MAXDUMP **Entity Name After Substitution:** BBM.*bbissid*.CICS.*targetid*.SETDMPC.MAXDUMP
Dump Codes - Action – Set SDUMP Opt	Can the user issue the SET command from the CDUMPCD views to modify the system dump option for a CICS dump code? **Default Entity Name:** BBM.&SERVER.CICS.&CONTEXT.SETDMPC.SDMPOPT **Entity Name After Substitution:** BBM.*bbissid*.CICS.*targetid*.SETDMPC.SDMPOPT
Dump Codes - Action – Set Shutdown Opt	Can the user issue the SET command from the CDUMPCD views to modify the shutdown option for a CICS dump code? **Default Entity Name:** BBM.&SERVER.CICS.&CONTEXT.SETDMPC.SHDNOPT **Entity Name After Substitution:** BBM.*bbissid*.CICS.*targetid*.SETDMPC.SHDNOPT
Dump Codes - Action – Set TranDump Opt	Can the user issue the SET command from the CDUMPCD views to modify the transaction dump option for a CICS dump code? **Default Entity Name:** BBM.&SERVER.CICS.&CONTEXT.SETDMPC.TDMPOPT **Entity Name After Substitution:** BBM.*bbissid*.CICS.*targetid*.SETDMPC.TDMPOPT
File - Table Data	Can the user access CICS file table data? **Default Entity Name:** BBM.&PRODUCT.&CONTEXT.&INTTABLE.OD **Entity Name after Substitution:** BBM.MVCICS.*targetid*.KTAA0.OD
File - Any Action	Can the user issue any action commands from the CFILE views? **Default Entity Name:** BBM.&PRODUCT.&CONTEXT.&INTTABLE.AO **Entity Name After Substitution:** BBM.MVCICS.*targetid*.KTAA0.AO
File - Action – Close	Can the user issue the CLO command from the CFILE views to close a CICS file? **Default Entity Name:** BBM.&SERVER.CICS.&CONTEXT.ALTFILE.CLOSE **Entity Name After Substitution:** BBM.*bbissid*.CICS.*targetid*.ALTFILE.CLOSE
File - Action – Disable	Can the user issue the DIS command from the CFILE views to disable a CICS file? **Default Entity Name:** BBM.&SERVER.CICS.&CONTEXT.ALTFILE.DISFILE **Entity Name After Substitution:** BBM.*bbissid*.CICS.*targetid*.ALTFILE.DISFILE

Table 20. Resource Definitions for MAINVIEW for CICS (Continued)

Resource name in SERDEF view	Resource definition and considerations
File - Action – Enable	Can the user issue the ENA command from the CFILE views to enable a CICS file? **Default Entity Name:** BBM.&SERVER.CICS.&CONTEXT.ALTFILE.ENAFILE **Entity Name After Substitution:** BBM.*bbissid*.CICS.*targetid*.ALTFILE.ENAFILE
File - Action – Free	Can the user issue the FRE command from the CFILE views to free a CICS file? **Default Entity Name:** BBM.&SERVER.CICS.&CONTEXT.ALTFILE.FREE **Entity Name After Substitution:** BBM.*bbissid*.CICS.*targetid*.ALTFILE.FREE
File - Action – Open	Can the user issue the OPE command from the CFILE views to open a CICS file? **Default Entity Name:** BBM.&SERVER.CICS.&CONTEXT.ALTFILE.OPEN **Entity Name After Substitution:** BBM.*bbissid*.CICS.*targetid*.ALTFILE.OPEN
Initialization Parms - Table Data	Can the user access CICS initialization parameter table data? **Default Entity Name:** BBM.&PRODUCT.&CONTEXT.&INTTABLE.OD **Entity Name after Substitution:** BBM.MVCICS.*targetid*.KRE20.OD
Intv Cntl Elems - Table Data	Can the user access CICS interval control element (ICE) table data? **Default Entity Name:** BBM.&PRODUCT.&CONTEXT.&INTTABLE.OD **Entity Name after Substitution:** BBM.MVCICS.*targetid*.KTE80.OD
Intv Cntl Elems - Any Action	Can the user issue any action commands from the CICES views? **Default Entity Name:** BBM.&PRODUCT.&CONTEXT.&INTTABLE.AO **Entity Name After Substitution:** BBM.MVCICS.*targetid*.KTE80.AO
Intv Cntl Elems - Action – Purge	Can the user issue the PUR command from the CICES views to purge an ICE? **Default Entity Name:** BBM.&SERVER.CICS.&CONTEXT.ALTICES.PURGICS **Entity Name After Substitution:** BBM.*bbissid*.CICS.*targetid*.ALTICES.PURGICS
JVM Pool - Table Data	Can the user access CICS Java Virtual Machine table data? **Default Entity Name:** BBM.&PRODUCT.&CONTEXT.&INTTABLE.OD **Entity Name after Substitution:** BBM.MVCICS.*targetid*.KRE50.OD
JVM Pool - Any Action	Can the user issue any action commands from the CJVMPL views? **Default Entity Name:** BBM.&PRODUCT.&CONTEXT.&INTTABLE.AO **Entity Name After Substitution:** BBM.MVCICS.*targetid*.KRE50.AO

Table 20. Resource Definitions for MAINVIEW for CICS (Continued)

Resource name in SERDEF view	Resource definition and considerations
Default - JVM Pool Status Action	Can the user modify the status of a JVM pool from the CJVMPL views? This is the default resource definition for the following resources: • JVM Pool - Action - Disable • JVM Pool - Action - Enable • JVM Pool - Action - Set Status **Default Entity Name:** BBM.&SERVER.CICS.&CONTEXT.SETJVMP.STATUS **Entity Name After Substitution:** BBM.*bbissid*.CICS.*targetid*.SETJVMP.STATUS
Default - JVM Pool Terminate Action	Can the user force purge, purge, or terminate a JVM pool from the CJVMPL views? This is the default resource definition for the following resources: • JVM Pool - Action - Force • JVM Pool - Action - Purge • JVM Pool - Action - Terminate **Default Entity Name:** BBM.&SERVER.CICS.&CONTEXT.SETJVMP.TERMINAT **Entity Name After Substitution:** BBM.*bbissid*.CICS.*targetid*.SETJVMP.TERMINAT
JVM Pool - Action – Force	Can the user issue the FOR command from the CJVMPL views to force purge the JVM pool? **Default Entity Name:** BBM.&SERVER.CICS.&CONTEXT.SETJVMP.TERMINAT **Entity Name After Substitution:** BBM.*bbissid*.CICS.*targetid*.SETJVMP.TERMINAT
JVM Pool - Action – Purge	Can the user issue the PUR command from the CJVMPL views to purge the JVM pool? **Default Entity Name:** BBM.&SERVER.CICS.&CONTEXT.SETJVMP.TERMINAT **Entity Name After Substitution:** BBM.*bbissid*.CICS.*targetid*.SETJVMP.TERMINAT
JVM Pool - Action – Set Disable	Can the user issue the DIS command from the CJVMPL views to disable the JVM pool? **Default Entity Name:** BBM.&SERVER.CICS.&CONTEXT.SETJVMP.STATUS **Entity Name After Substitution:** BBM.*bbissid*.CICS.*targetid*.SETJVMP.STATUS
JVM Pool - Action – Set Enable	Can the user issue the ENA command from the CJVMPL views to enable the JVM pool? **Default Entity Name:** BBM.&SERVER.CICS.&CONTEXT.SETJVMP.STATUS **Entity Name After Substitution:** BBM.*bbissid*.CICS.*targetid*.SETJVMP.STATUS
JVM Pool - Action – Set Status	Can the user issue the SET command from the CJVMPL views to modify the status of the JVM pool? **Default Entity Name:** BBM.&SERVER.CICS.&CONTEXT.SETJVMP.STATUS **Entity Name After Substitution:** BBM.*bbissid*.CICS.*targetid*.SETJVMP.STATUS
JVM Pool - Action – Terminate	Can the user issue the TRM command from the CJVMPL views to terminate the JVM pool? **Default Entity Name:** BBM.&SERVER.CICS.&CONTEXT.SETJVMP.TERMINAT **Entity Name After Substitution:** BBM.*bbissid*.CICS.*targetid*.SETJVMP.TERMINAT

Table 20. Resource Definitions for MAINVIEW for CICS (Continued)

Resource name in SERDEF view	Resource definition and considerations
Monitor - Table Data	Can the user access monitor table data? **Default Entity Name:** BBM.&PRODUCT.&CONTEXT.&INTTABLE.OD **Entity Name after Substitution:** BBM.MVCICS.*targetid*.KAA10.OD
Program - Table Data	Can the user access CICS program table data? **Default Entity Name:** BBM.&PRODUCT.&CONTEXT.&INTTABLE.OD **Entity Name after Substitution:** BBM.MVCICS.*targetid*.KTAB0.OD
Program - Any Action	Can the user issue any action commands from the CPROG views? **Default Entity Name:** BBM.&PRODUCT.&CONTEXT.&INTTABLE.AO **Entity Name After Substitution:** BBM.MVCICS.*targetid*.KTAB0.AO
Program - Action – Disable	Can the user issue the DIS command from the CPROG views to disable a CICS program? **Default Entity Name:** BBM.&SERVER.CICS.&CONTEXT.ALTPROG.DISPROG **Entity Name After Substitution:** BBM.*bbissid*.CICS.*targetid*.ALTPROG.DISPROG
Program - Action – Enable	Can the user issue the ENA command from the CPROG views to enable a CICS program? **Default Entity Name:** BBM.&SERVER.CICS.&CONTEXT.ALTPROG.ENAPROG **Entity Name After Substitution:** BBM.*bbissid*.CICS.*targetid*.ALTPROG.ENAPROG
Program - Action – Load	Can the user issue the LOA command from the CPROG views to load a CICS program? **Default Entity Name:** BBM.&SERVER.CICS.&CONTEXT.ALTPROG.PGMLOAD **Entity Name After Substitution:** BBM.*bbissid*.CICS.*targetid*.ALTPROG.PGMLOAD
Program - Action – NewCopy	Can the user issue the NEW command from the CPROG views to NEWCOPY a CICS program? **Default Entity Name:** BBM.&SERVER.CICS.&CONTEXT.ALTPROG.NEWCOPY **Entity Name After Substitution:** BBM.*bbissid*.CICS.*targetid*.ALTPROG.NEWCOPY
Program - Action – Set CICS Key	Can the user issue the CKY command from the CPROG views to set a CICS program execution key to CICS? **Default Entity Name:** BBM.&SERVER.CICS.&CONTEXT.ALTPROG.CICPROG **Entity Name After Substitution:** BBM.*bbissid*.CICS.*targetid*.ALTPROG.CICPROG
Program - Action – Set USER Key	Can the user issue the UKY command from the CPROG views to set a CICS program execution key to USER? **Default Entity Name:** BBM.&SERVER.CICS.&CONTEXT.ALTPROG.USEPROG **Entity Name After Substitution:** BBM.*bbissid*.CICS.*targetid*.ALTPROG.USEPROG
Program - Action – Unload	Can the user issue the UNL command from the CPROG views to unload a CICS program? **Default Entity Name:** BBM.&SERVER.CICS.&CONTEXT.ALTPROG.PGMDRP **Entity Name After Substitution:** BBM.*bbissid*.CICS.*targetid*.ALTPROG.PGMDRP

Table 20. Resource Definitions for MAINVIEW for CICS (Continued)

Resource name in SERDEF view	Resource definition and considerations
Real-Time Delay Analysis - Table Data	Can the user access real-time CICS delay analysis table data? **Default Entity Name:** BBM.&PRODUCT.&CONTEXT.&INTTABLE.OD **Entity Name after Substitution:** BBM.MVCICS.*targetid*.KRDC0.OD
Region - Table Data	Can the user access CICS region table data? **Default Entity Name:** BBM.&PRODUCT.&CONTEXT.&INTTABLE.OD **Entity Name after Substitution:** BBM.MVCICS.*targetid*.KRE10.OD
Region - Any Action	Can the user issue any commands on the CREGION views? **Default Entity Name:** BBM.&PRODUCT.&CONTEXT.&INTTABLE.AO **Name After Substitution:** BBM.MVCICS.*targetid*.KRE10.AO
Region - Action - Restart	Can the user issue the RES command from the CREGION views to stop and restart the MAINVIEW for CICS and/or MAINVIEW AutoOPERATOR for CICS agents on a CICS region? **Default Entity Name:** BBM.&PRODUCT.&CONTEXT.&INTTABLE.&INTACTION.OA **Entity Name After Substitution:** BBM.MVCICS.*targetid*.KRE10.RESTART.OA
Region - Action - Terminate	Can the user issue the TRM command from the CREGION views to terminate the MAINVIEW for CICS and/or MAINVIEW AutoOPERATOR for CICS agents on a CICS region? **Default Entity Name:** BBM.&PRODUCT.&CONTEXT.&INTTABLE.&INTACTION.OA **Entity Name After Substitution:** BBM.MVCICS.*targetid*.KRE10.TERM.OA
Region - Action - Initialize	Can the user issue the INI command from the CREGION views to start the MAINVIEW for CICS and/or MAINVIEW AutoOPERATOR for CICS agents on a CICS region? **Default Entity Name:** BBM.&PRODUCT.&CONTEXT.&INTTABLE.&INTACTION.OA **Entity Name After Substitution:** BBM.MVCICS.*targetid*.KRE10.INIT.OA
Region - Action - Start Extractor	Can the user issue the XON command from the CREGION views to start the MAINVIEW for CICS transaction history data extractor on a CICS region? **Default Entity Name:** BBM.&PRODUCT.&CONTEXT.&INTTABLE.&INTACTION.OA **Entity Name After Substitution:** BBM.MVCICS.*targetid*.KRE10.QON.OA
Region - Action - Stop Extractor	Can the user issue the XOF command from the CREGION views to stop the MAINVIEW for CICS transaction history data extractor on a CICS region? **Default Entity Name:** BBM.&PRODUCT.&CONTEXT.&INTTABLE.&INTACTION.OA **Entity Name After Substitution:** BBM.MVCICS.*targetid*.KRE10.QOFF.OA
Region - Action - Start LRT	Can the user issue the LON command from the CREGION views to start the MAINVIEW for CICS long-running work task on a CICS region? **Default Entity Name:** BBM.&PRODUCT.&CONTEXT.&INTTABLE.&INTACTION.OA **Entity Name After Substitution:** BBM.MVCICS.*targetid*.KRE10.LON.OA

Table 20. Resource Definitions for MAINVIEW for CICS (Continued)

Resource name in SERDEF view	Resource definition and considerations
Region - Action - Stop LRT	Can the user issue the LOF command from the CREGION views to stop the MAINVIEW for CICS long-running work task on a CICS region? **Default Entity Name:** BBM.&PRODUCT.&CONTEXT.&INTTABLE.&INTACTION.OA **Entity Name After Substitution:** BBM.MVCICS.*targetid*.KRE10.LOFF.OA
Region - Action - Start Task Kill Exit	Can the user issue the KON command from the CREGION views to start the MAINVIEW for CICS task kill exit on a CICS region? **Default Entity Name:** BBM.&PRODUCT.&CONTEXT.&INTTABLE.&INTACTION.OA **Entity Name After Substitution:** BBM.MVCICS.*targetid*.KRE10.KON.OA
Region - Action - Stop Task Kill Exit	Can the user issue the KOF command from the CREGION views to stop the MAINVIEW for CICS task kill exit on a CICS region? **Default Entity Name:** BBM.&PRODUCT.&CONTEXT.&INTTABLE.&INTACTION.OA **Entity Name After Substitution:** BBM.MVCICS.*targetid*.KRE10.KOFF.OA
Region - Action - Reload Task Kill Parms	Can the user issue the KRL command from the CREGION views to reload the MAINVIEW for CICS task kill exit parameter data on a CICS region? **Default Entity Name:** BBM.&PRODUCT.&CONTEXT.&INTTABLE.&INTACTION.OA **Entity Name After Substitution:** BBM.MVCICS.*targetid*.KRE10.KRLD.OA
Region - Action - Switch CMRDETL	Can the user issue the SWI command from the CREGION views to switch the MAINVIEW for CICS transaction history detail data sets? **Default Entity Name:** BBM.&PRODUCT.&CONTEXT.&INTTABLE.&INTACTION.OA **Entity Name After Substitution:** BBM.MVCICS.*targetid*.KRE10.SWITCH.OA
Region - Action - Start AO Agent	Can the user issue the AON command from the CREGION views to start the MAINVIEW AutoOPERATOR for CICS agent on a CICS region? **Default Entity Name:** BBM.&PRODUCT.&CONTEXT.&INTTABLE.&INTACTION.OA **Entity Name After Substitution:** BBM.MVCICS.*targetid*.KRE10.AAOON.OA
Region - Action - Stop AO Agent	Can the user issue the AOF command from the CREGION views to stop the MAINVIEW AutoOPERATOR for CICS agent on a CICS region? **Default Entity Name:** BBM.&PRODUCT.&CONTEXT.&INTTABLE.&INTACTION.OA **Entity Name After Substitution:** BBM.MVCICS.*targetid*.KRE10.AAOOFF.OA
Region DB2 - Table Data	Can the user access CICS region DB2 table data? **Default Entity Name:** BBM.&PRODUCT.&CONTEXT.&INTTABLE.OD **Entity Name after Substitution:** BBM.MVCICS.*targetid*.KRE70.OD
Region DBCTL - Table Data	Can the user access CICS region DBCTL table data? **Default Entity Name:** BBM.&PRODUCT.&CONTEXT.&INTTABLE.OD **Entity Name after Substitution:** BBM.MVCICS.*targetid*.KRE80.OD

Table 20. Resource Definitions for MAINVIEW for CICS (Continued)

Resource name in SERDEF view	Resource definition and considerations
Region MQSeries - Table Data	Can the user access CICS region MQSeries table data? **Default Entity Name:** BBM.&PRODUCT.&CONTEXT.&INTTABLE.OD **Entity Name after Substitution:** BBM.MVCICS.*targetid*.KRE90.OD
Region Parms - Table Data	Can the user access CICS system parameter table data? **Default Entity Name:** BBM.&PRODUCT.&CONTEXT.&INTTABLE.OD **Entity Name after Substitution:** BBM.MVCICS.*targetid*.KRE30.OD
Region Parms - Any Action	Can the user issue any action commands from the CREGSYS views? **Default Entity Name:** BBM.&PRODUCT.&CONTEXT.&INTTABLE.AO **Entity Name After Substitution:** BBM.MVCICS.*targetid*.KRE30.AO
Region Parms - Action – Set AI Ctlg Opt	Can the user issue the SET command from the CREGSYS views to modify the autoinstall (AI) program facility catalog option for a CICS region? **Default Entity Name:** BBM.&SERVER.CICS.&CONTEXT.SETSYS.PGACTLG **Entity Name After Substitution:** BBM.*bbissid*.CICS.*targetid*.SETSYS.PGACTLG
Region Parms - Action – Set AI Exit	Can the user issue the SET command from the CREGSYS views to modify the name of the autoinstall (AI) program exit for a CICS region? **Default Entity Name:** BBM.&SERVER.CICS.&CONTEXT.SETSYS.PGAEXIT **Entity Name After Substitution:** BBM.*bbissid*.CICS.*targetid*.SETSYS.PGAEXIT
Region Parms - Action – Set AI Status	Can the user issue the SET command from the CREGSYS views to modify the status of the autoinstall (AI) program facility for a CICS region? **Default Entity Name:** BBM.&SERVER.CICS.&CONTEXT.SETSYS.PGASTAT **Entity Name After Substitution:** BBM.*bbissid*.CICS.*targetid*.SETSYS.PGASTAT
Region Parms - Action – Set AKP Freq	Can the user issue the SET command from the CREGSYS views to modify the activity keypoint (AKP) frequency value for a CICS region? **Default Entity Name:** BBM.&SERVER.CICS.&CONTEXT.SETSYS.AKP **Entity Name After Substitution:** BBM.*bbissid*.CICS.*targetid*.SETSYS.AKP
Region Parms - Action – Set DSA Limit	Can the user issue the SET command from the CREGSYS views to modify the DSA limit for a CICS region? **Default Entity Name:** BBM.&SERVER.CICS.&CONTEXT.SETSYS.DSALIM **Entity Name After Substitution:** BBM.*bbissid*.CICS.*targetid*.SETSYS.DSALIM
Region Parms - Action – Set DTR Prog	Can the user issue the SET command from the CREGSYS views to modify the name of the dynamic transaction routing (DTR) program for a CICS region? **Default Entity Name:** BBM.&SERVER.CICS.&CONTEXT.SETSYS.DTRPROG **Entity Name After Substitution:** BBM.*bbissid*.CICS.*targetid*.SETSYS.DTRPROG

Table 20. Resource Definitions for MAINVIEW for CICS (Continued)

Resource name in SERDEF view	Resource definition and considerations
Region Parms - Action – Set Dump Dataset	Can the user issue the SET command from the CREGSYS views to modify which dump data set is to be used for a CICS region? **Default Entity Name:** BBM.&SERVER.CICS.&CONTEXT.SETDMPD.DATASET **Entity Name After Substitution:** BBM.*bbissid*.CICS.*targetid*.SETDMPD.DATASET
Region Parms - Action – Set Dump Status	Can the user issue the SET command from the CREGSYS views to modify the dump data set open status for a CICS region? **Default Entity Name:** BBM.&SERVER.CICS.&CONTEXT.SETDMPD.STATUS **Entity Name After Substitution:** BBM.*bbissid*.CICS.*targetid*.SETDMPD.STATUS
Region Parms - Action – Set EDSA Limit	Can the user issue the SET command from the CREGSYS views to modify the EDSA limit for a CICS region? **Default Entity Name:** BBM.&SERVER.CICS.&CONTEXT.SETSYS.EDSALIM **Entity Name After Substitution:** BBM.*bbissid*.CICS.*targetid*.SETSYS.EDSALIM
Region Parms - Action – Set ForceQR Opt	Can the user issue the SET command from the CREGSYS views to modify the option that requires programs to run on the quasi-reentrant TCB within a CICS region? **Default Entity Name:** BBM.&SERVER.CICS.&CONTEXT.SETSYS.FORCEQR **Entity Name After Substitution:** BBM.*bbissid*.CICS.*targetid*.SETSYS.FORCEQR
Region Parms - Action – Set ICV Wait	Can the user issue the SET command from the CREGSYS views to modify the ICV wait time for a CICS region? **Default Entity Name:** BBM.&SERVER.CICS.&CONTEXT.SETSYS.TIME **Entity Name After Substitution:** BBM.*bbissid*.CICS.*targetid*.SETSYS.TIME
Region Parms - Action – Set Init Dump	Can the user issue the SET command from the CREGSYS views to modify the initial dump data set option for a CICS region? **Default Entity Name:** BBM.&SERVER.CICS.&CONTEXT.SETDMPD.INIT **Entity Name After Substitution:** BBM.*bbissid*.CICS.*targetid*.SETDMPD.INIT
Region Parms - Action – Set Max Tasks	Can the user issue the SET command from the CREGSYS views to modify the maximum number of tasks for a CICS region? **Default Entity Name:** BBM.&SERVER.CICS.&CONTEXT.SETSYS.MAXTASK **Entity Name After Substitution:** BBM.*bbissid*.CICS.*targetid*.SETSYS.MAXTASK
Region Parms - Action – Set Prty Aging	Can the user issue the SET command from the CREGSYS views to modify the priority aging value for a CICS region? **Default Entity Name:** BBM.&SERVER.CICS.&CONTEXT.SETSYS.PRTYAGE **Entity Name After Substitution:** BBM.*bbissid*.CICS.*targetid*.SETSYS.PRTYAGE
Region Parms - Action – Set Runaway	Can the user issue the SET command from the CREGSYS views to modify the default runaway task timeout value for a CICS region? **Default Entity Name:** BBM.&SERVER.CICS.&CONTEXT.SETSYS.RUNAWAY **Entity Name After Substitution:** BBM.*bbissid*.CICS.*targetid*.SETSYS.RUNAWAY

Table 20. Resource Definitions for MAINVIEW for CICS (Continued)

Resource name in SERDEF view	Resource definition and considerations
Region Parms - Action – Set Scan Delay	Can the user issue the SET command from the CREGSYS views to modify the maximum terminal scan delay for a CICS region? **Default Entity Name:** BBM.&SERVER.CICS.&CONTEXT.SETSYS.SCANDEL **Entity Name After Substitution:** BBM.*bbissid*.CICS.*targetid*.SETSYS.SCANDEL
Region Parms - Action – Set Swtch DmpDS	Can the user issue the SET command from the CREGSYS views to modify the dump data set switch option for a CICS region? **Default Entity Name:** BBM.&SERVER.CICS.&CONTEXT.SETDMPD.SWITCH **Entity Name After Substitution:** BBM.*bbissid*.CICS.*targetid*.SETDMPD.SWITCH
Region Parms - Action – Set SysDump Opt	Can the user issue the SET command from the CREGSYS views to modify the system dump option for a CICS region? **Default Entity Name:** BBM.&SERVER.CICS.&CONTEXT.SETSYS.DUMPING **Entity Name After Substitution:** BBM.*bbissid*.CICS.*targetid*.SETSYS.DUMPING
Region Problems - Table Data	Can the user access CICS region problem table data? **Default Entity Name:** BBM.&PRODUCT.&CONTEXT.&INTTABLE.OD **Entity Name after Substitution:** BBM.MVCICS.*targetid*.KRE40.OD
Region Temp Stg. - Table Data	Can the user access CICS region temporary storage table data? **Default Entity Name:** BBM.&PRODUCT.&CONTEXT.&INTTABLE.OD **Entity Name after Substitution:** BBM.MVCICS.*targetid*.KREA0.OD
Session - Table Data	Can the user access CICS session table data? **Default Entity Name:** BBM.&PRODUCT.&CONTEXT.&INTTABLE.OD **Entity Name after Substitution:** BBM.MVCICS.*targetid*.KTAD0.OD
Session - Any Action	Can the user issue any action commands from the CSESS views? **Default Entity Name:** BBM.&PRODUCT.&CONTEXT.&INTTABLE.AO **Entity Name After Substitution:** BBM.MVCICS.*targetid*.KTAD0.AO
Session - Action – Acquire	Can the user issue the ACQ command from the CSESS views to acquire a CICS session? **Default Entity Name:** BBM.&SERVER.CICS.&CONTEXT.ALTTERM.ACQTERM **Entity Name After Substitution:** BBM.*bbissid*.CICS.*targetid*.ALTTERM.ACQTERM
Session - Action – Cancel	Can the user issue the CAN command from the CSESS views to cancel a CICS session? **Default Entity Name:** BBM.&SERVER.CICS.&CONTEXT.ALTTASK.KILCEMT **Entity Name After Substitution:** BBM.*bbissid*.CICS.*targetid*.ALTTASK.KILCEMT
Session - Action – Purge	Can the user issue the PUR command from the CSESS views to purge a CICS session? **Default Entity Name:** BBM.&SERVER.CICS.&CONTEXT.ALTTASK.KILCEMT **Entity Name After Substitution:** BBM.*bbissid*.CICS.*targetid*.ALTTASK.KILCEMT

Table 20. Resource Definitions for MAINVIEW for CICS (Continued)

Resource name in SERDEF view	Resource definition and considerations
Session - Action – Release	Can the user issue the REL command from the CSESS views to release a CICS session? **Default Entity Name:** BBM.&SERVER.CICS.&CONTEXT.ALTTERM.RELTERM **Entity Name After Substitution:** BBM.*bbissid*.CICS.*targetid*.ALTTERM.RELTERM
Task - Table Data	Can the user access task table data? **Default Entity Name:** BBM.&PRODUCT.&CONTEXT.&INTTABLE.OD **Entity Name after Substitution:** BBM.MVCICS.*targetid*.KTA10.OD
Task - Any Action	Can the user issue any action commands from the TASK views? **Default Entity Name:** BBM.&PRODUCT.&CONTEXT.&INTTABLE.AO **Entity Name After Substitution:** BBM.MVCICS.*targetid*.KTA10.AO
Default - Task Kill Action	Can the user kill, force, or delete a task from any of the task views? This is the default resource definition for the following resources: • Task - Action - Kill • Task - Action - Force • Task - Action - Delete **Default Entity Name:** BBM.&SERVER.CICS.&CONTEXT.ALTTASK.KILL **Entity Name After Substitution:** BBM.*bbissid*.CICS.*targetid*.ALTTASK.KILL
Default - Task Purge Action	Can the user cancel or purge a task from any of the task views? This is the default resource definition for the following resources: • Task - Action - Cancel • Task - Action - Purge **Default Entity Name:** BBM.&SERVER.CICS.&CONTEXT.ALTTASK.KILCEMT **Entity Name After Substitution:** BBM.*bbissid*.CICS.*targetid*.ALTTASK.KILCEMT
Task - Action – Cancel	Can the user issue the CAN command from the following task views to cancel a CICS task: • TASK • TASKDSA • TASKFIL • TASKLCK • TASKTRC **Default Entity Name:** BBM.&SERVER.CICS.&CONTEXT.ALTTASK.KILCEMT **Entity Name After Substitution:** BBM.*bbissid*.CICS.*targetid*.ALTTASK.KILCEMT

Table 20. Resource Definitions for MAINVIEW for CICS (Continued)

Resource name in SERDEF view	Resource definition and considerations
Task - Action – Delete	Can the user issue the DEL command from the following task views to delete a CICS task: • TASK • TASKDSA • TASKFIL • TASKLCK • TASKTRC **Default Entity Name:** BBM.&SERVER.CICS.&CONTEXT.ALTTASK.KILL **Entity Name After Substitution:** BBM.*bbissid*.CICS.*targetid*.ALTTASK.KILL
Task - Action – Force	Can the user issue the FOR command from the following task views to force purge a CICS task: • TASK • TASKDSA • TASKFIL • TASKLCK • TASKTRC **Default Entity Name:** BBM.&SERVER.CICS.&CONTEXT.ALTTASK.KILL **Entity Name After Substitution:** BBM.*bbissid*.CICS.*targetid*.ALTTASK.KILL
Task - Action – Kill	Can the user issue the KIL command from the following task views to kill a CICS task: • TASK • TASKDSA • TASKFIL • TASKLCK • TASKTRC **Default Entity Name:** BBM.&SERVER.CICS.&CONTEXT.ALTTASK.KILL **Entity Name After Substitution:** BBM.*bbissid*.CICS.*targetid*.ALTTASK.KILL
Task - Action – Purge	Can the user issue the PUR command from the following task views to purge a CICS task: • TASK • TASKDSA • TASKFIL • TASKLCK • TASKTRC **Default Entity Name:** BBM.&SERVER.CICS.&CONTEXT.ALTTASK.KILCEMT **Entity Name After Substitution:** BBM.*bbissid*.CICS.*targetid*.ALTTASK.KILCEMT
Task DSA - Table Data	Can the user access task DSA table data? **Default Entity Name:** BBM.&PRODUCT.&CONTEXT.&INTTABLE.OD **Entity Name after Substitution:** BBM.MVCICS.*targetid*.KTA60.OD

Table 20. Resource Definitions for MAINVIEW for CICS (Continued)

Resource name in SERDEF view	Resource definition and considerations
Task DSA - Any Action	Can the user issue any action commands from the TASKDSA views? **Default Entity Name:** BBM.&PRODUCT.&CONTEXT.&INTTABLE.AO **Entity Name After Substitution:** BBM.MVCICS.*targetid*.KTA60.AO
Task File - Table Data	Can the user access task file table data? **Default Entity Name:** BBM.&PRODUCT.&CONTEXT.&INTTABLE.OD **Entity Name after Substitution:** BBM.MVCICS.*targetid*.KTA70.OD
Task File - Any Action	Can the user issue any action commands from the TASKFIL views? **Default Entity Name:** BBM.&PRODUCT.&CONTEXT.&INTTABLE.AO **Entity Name After Substitution:** BBM.MVCICS.*targetid*.KTA70.AO
Task Lock - Table Data	Can the user access task lock table data? **Default Entity Name:** BBM.&PRODUCT.&CONTEXT.&INTTABLE.OD **Entity Name after Substitution:** BBM.MVCICS.*targetid*.KTA20.OD
Task Lock - Any Action	Can the user issue any action commands from the TASKLCK views? **Default Entity Name:** BBM.&PRODUCT.&CONTEXT.&INTTABLE.AO **Entity Name After Substitution:** BBM.MVCICS.*targetid*.KTA20.AO
Task Trace - Table Data	Can the user access task trace table data? **Default Entity Name:** BBM.&PRODUCT.&CONTEXT.&INTTABLE.OD **Entity Name after Substitution:** BBM.MVCICS.*targetid*.KTA80.OD
Task Trace - Any Action	Can the user issue any action commands from the TASKTRD views? **Default Entity Name:** BBM.&PRODUCT.&CONTEXT.&INTTABLE.AO **Entity Name After Substitution:** BBM.MVCICS.*targetid*.KTA80.AO
TCPIP Service - Table Data	Can the user access CICS TCP/IP Services table data? **Default Entity Name:** BBM.&PRODUCT.&CONTEXT.&INTTABLE.OD **Entity Name after Substitution:** BBM.MVCICS.*targetid*.KTE30.OD
TCPIP Service - Any Action	Can the user issue any action commands from the CTCPSRV views? **Default Entity Name:** BBM.&PRODUCT.&CONTEXT.&INTTABLE.AO **Entity Name After Substitution:** BBM.MVCICS.*targetid*.KTE30.AO

Table 20. Resource Definitions for MAINVIEW for CICS (Continued)

Resource name in SERDEF view	Resource definition and considerations
Default - TCPIP Open Status Action	Can the user modify the open status of a TCP/IP service from the CTCPSRV views? This is the default resource definition for the following resources: • TCPIP Service - Action - Close • TCPIP Service - Action - Close Immed • TCPIP Service - Action - Open • TCPIP Service - Action - Set Open State **Default Entity Name:** BBM.&SERVER.CICS.&CONTEXT.SETTCPS.OPENSTAT **Entity Name After Substitution:** BBM.*bbissid*.CICS.*targetid*.SETTCPS.OPENSTAT
TCPIP Service - Action – Close	Can the user issue the CLO command from the CTCPSRV views to close a CICS TCP/IP service? **Default Entity Name:** BBM.&SERVER.CICS.&CONTEXT.SETTCPS.OPENSTAT **Entity Name After Substitution:** BBM.*bbissid*.CICS.*targetid*.SETTCPS.OPENSTAT
TCPIP Service - Action – Close Immed	Can the user issue the IMC command from the CTCPSRV views to immediately close a CICS TCP/IP service? **Default Entity Name:** BBM.&SERVER.CICS.&CONTEXT.SETTCPS.OPENSTAT **Entity Name After Substitution:** BBM.*bbissid*.CICS.*targetid*.SETTCPS.OPENSTAT
TCPIP Service - Action – Open	Can the user issue the OPE command from the CTCPSRV views to open a CICS TCP/IP service? **Default Entity Name:** BBM.&SERVER.CICS.&CONTEXT.SETTCPS.OPENSTAT **Entity Name After Substitution:** BBM.*bbissid*.CICS.*targetid*.SETTCPS.OPENSTAT
TCPIP Service - Action – Set Backlog	Can the user issue the SET command from the CTCPSRV views to modify the maximum number of requests that can be queued to a CICS TCP/IP service? **Default Entity Name:** BBM.&SERVER.CICS.&CONTEXT.SETTCPS.BACKLOG **Entity Name After Substitution:** BBM.*bbissid*.CICS.*targetid*.SETTCPS.BACKLOG
TCPIP Service - Action – Set DNS Status	Can the user issue the SET command from the CTCPSRV views to modify the DNS/WLM status for a CICS TCP/IP service? **Default Entity Name:** BBM.&SERVER.CICS.&CONTEXT.SETTCPS.DNSSTAT **Entity Name After Substitution:** BBM.*bbissid*.CICS.*targetid*.SETTCPS.DNSSTAT
TCPIP Service - Action – Set Open State	Can the user issue the SET command from the CTCPSRV views to modify the open state of a CICS TCP/IP service? **Default Entity Name:** BBM.&SERVER.CICS.&CONTEXT.SETTCPS.OPENSTAT **Entity Name After Substitution:** BBM.*bbissid*.CICS.*targetid*.SETTCPS.OPENSTAT
TCPIP Service - Action – Set URM Name	Can the user issue the SET command from the CTCPSRV views to modify the user replaceable module (URM) name for a CICS TCP/IP service? **Default Entity Name:** BBM.&SERVER.CICS.&CONTEXT.SETTCPS.URM **Entity Name After Substitution:** BBM.*bbissid*.CICS.*targetid*.SETTCPS.URM

Table 20. Resource Definitions for MAINVIEW for CICS (Continued)

Resource name in SERDEF view	Resource definition and considerations
Terminal - Table Data	Can the user access CICS terminal table data? **Default Entity Name:** BBM.&PRODUCT.&CONTEXT.&INTTABLE.OD **Entity Name after Substitution:** BBM.MVCICS.*targetid*.KTAE0.OD
Terminal - Any Action	Can the user issue any action commands from the CTERM views? **Default Entity Name:** BBM.&PRODUCT.&CONTEXT.&INTTABLE.AO **Entity Name After Substitution:** BBM.MVCICS.*targetid*.KTAE0.AO
Terminal - Action – Acquire	Can the user issue the ACQ command from the CTERM views to acquire a CICS terminal? **Default Entity Name:** BBM.&SERVER.CICS.&CONTEXT.ALTTERM.ACQTERM **Entity Name After Substitution:** BBM.*bbissid*.CICS.*targetid*.ALTTERM.ACQTERM
Terminal - Action – Cancel Task	Can the user issue the CAN command from the CTERM views to cancel a CICS task that is associated with a CICS terminal? **Default Entity Name:** BBM.&SERVER.CICS.&CONTEXT.ALTTASK.KILCEMT **Entity Name After Substitution:** BBM.*bbissid*.CICS.*targetid*.ALTTASK.KILCEMT
Terminal - Action – InService	Can the user issue the INS command from the CTERM views to set a CICS terminal in service? **Default Entity Name:** BBM.&SERVER.CICS.&CONTEXT.ALTTERM.INSTERM **Entity Name After Substitution:** BBM.*bbissid*.CICS.*targetid*.ALTTERM.INSTERM
Terminal - Action – InSvc CU	Can the user issue the YBC command from the CTERM views to set a BTAM control unit in service? **Default Entity Name:** BBM.&SERVER.CICS.&CONTEXT.ALTCONT.INSCONT **Entity Name After Substitution:** BBM.*bbissid*.CICS.*targetid*.ALTCONT.INSCONT
Terminal - Action – InSvc Line	Can the user issue the LBL command from the CTERM views to set a BTAM line in service? **Default Entity Name:** BBM.&SERVER.CICS.&CONTEXT.ALTLINE.INSLINE **Entity Name After Substitution:** BBM.*bbissid*.CICS.*targetid*.ALTLINE.INSLINE
Terminal - Action - OutService	Can the user issue the OUT command from the CTERM views to set a CICS terminal out of service? **Default Entity Name:** BBM.&SERVER.CICS.&CONTEXT.ALTTERM.OUTTERM **Entity Name After Substitution:** BBM.*bbissid*.CICS.*targetid*.ALTTERM.OUTTERM
Terminal - Action – OutSvc CU	Can the user issue the ZBC command from the CTERM views to set a BTAM control unit out of service? **Default Entity Name:** BBM.&SERVER.CICS.&CONTEXT.ALTCONT.OUTCONT **Entity Name After Substitution:** BBM.*bbissid*.CICS.*targetid*.ALTCONT.OUTCONT

Table 20. Resource Definitions for MAINVIEW for CICS (Continued)

Resource name in SERDEF view	Resource definition and considerations
Terminal - Action – OutSvc Line	Can the user issue the XBL command from the CTERM views to set a BTAM line out of service? **Default Entity Name:** BBM.&SERVER.CICS.&CONTEXT.ALTLINE.OUTLINE **Entity Name After Substitution:** BBM.*bbissid*.CICS.*targetid*.ALTLINE.OUTLINE
Terminal - Action – Purge Task	Can the user issue the PUR command from the CTERM views to purge a CICS task that is associated with a CICS terminal? **Default Entity Name:** BBM.&SERVER.CICS.&CONTEXT.ALTTASK.KILCEMT **Entity Name After Substitution:** BBM.*bbissid*.CICS.*targetid*.ALTTASK.KILCEMT
Terminal - Action – Release	Can the user issue the REL command from the CTERM views to release a CICS terminal? **Default Entity Name:** BBM.&SERVER.CICS.&CONTEXT.ALTTERM.RELTERM **Entity Name After Substitution:** BBM.*bbissid*.CICS.*targetid*.ALTTERM.RELTERM
TIOT/Volume - Table Data	Can the user access CICS TIOT/Volume table data? **Default Entity Name:** BBM.&PRODUCT.&CONTEXT.&INTTABLE.OD **Entity Name after Substitution:** BBM.MVCICS.*targetid*.KTEB0.OD
Tran - Table Data	Can the user access CICS transaction table data? **Default Entity Name:** BBM.&PRODUCT.&CONTEXT.&INTTABLE.OD **Entity Name after Substitution:** BBM.MVCICS.*targetid*.KTA90.OD
Tran - Any Action	Can the user issue any action commands from the CTRAN views? **Default Entity Name:** BBM.&PRODUCT.&CONTEXT.&INTTABLE.AO **Entity Name After Substitution:** BBM.MVCICS.*targetid*.KTA90.AO
Tran - Action – Disable	Can the user issue the DIS command from the CTRAN views to disable a CICS transaction? **Default Entity Name:** BBM.&SERVER.CICS.&CONTEXT.ALTTRAN.DISTRAN **Entity Name After Substitution:** BBM.*bbissid*.CICS.*targetid*.ALTTRAN.DISTRAN
Tran - Action – Enable	Can the user issue the ENA command from the CTRAN views to enable a CICS transaction? **Default Entity Name:** BBM.&SERVER.CICS.&CONTEXT.ALTTRAN.ENATRAN **Entity Name After Substitution:** BBM.*bbissid*.CICS.*targetid*.ALTTRAN.ENATRAN
Tran - Action – Set Purgeable	Can the user issue the SPU command from the CTRAN views to make a CICS transaction purgeable? **Default Entity Name:** BBM.&SERVER.CICS.&CONTEXT.ALTTRAN.PURTRAN **Entity Name After Substitution:** BBM.*bbissid*.CICS.*targetid*.ALTTRAN.PURTRAN
Tran - Action – Set Non-Purgeable	Can the user issue the NPU command from the CTRAN views to make a CICS transaction non-purgeable? **Default Entity Name:** BBM.&SERVER.CICS.&CONTEXT.ALTTRAN.NONTRAN **Entity Name After Substitution:** BBM.*bbissid*.CICS.*targetid*.ALTTRAN.NONTRAN

Table 20. Resource Definitions for MAINVIEW for CICS (Continued)

Resource name in SERDEF view	Resource definition and considerations
Tran - Action – Set Datakey CICS	Can the user issue the CKY command from the CTRAN views to set a CICS transaction data key to CICS? **Default Entity Name:** BBM.&SERVER.CICS.&CONTEXT.ALTTRAN.CICTRAN **Entity Name After Substitution:** BBM.*bbissid*.CICS.*targetid*.ALTTRAN.CICTRAN
Tran - Action – Set Datakey USER	Can the user issue the UKY command from the CTRAN views to set a CICS transaction data key to USER? **Default Entity Name:** BBM.&SERVER.CICS.&CONTEXT.ALTTRAN.USETRAN **Entity Name After Substitution:** BBM.*bbissid*.CICS.*targetid*.ALTTRAN.USETRAN
Tran - Action – Set Txn Isolate	Can the user issue the TIS command from the CTRAN views to set a CICS transaction to ISOLATE? **Default Entity Name:** BBM.&SERVER.CICS.&CONTEXT.ALTTRAN.ISOTRAN **Entity Name After Substitution:** BBM.*bbissid*.CICS.*targetid*.ALTTRAN.ISOTRAN
Tran - Action – Set Txn NonIsolate	Can the user issue the NSO command from the CTRAN views to set a CICS transaction to NONISOLATE? **Default Entity Name:** BBM.&SERVER.CICS.&CONTEXT.ALTTRAN.NOITRAN **Entity Name After Substitution:** BBM.*bbissid*.CICS.*targetid*.ALTTRAN.NOITRAN
TranClass - Table Data	Can the user access CICS transaction class table data? **Default Entity Name:** BBM.&PRODUCT.&CONTEXT.&INTTABLE.OD **Entity Name after Substitution:** BBM.MVCICS.*targetid*.KTAF0.OD
TranClass - Any Action	Can the user issue any action commands from the CTRNCLA views? **Default Entity Name:** BBM.&PRODUCT.&CONTEXT.&INTTABLE.AO **Entity Name After Substitution:** BBM.MVCICS.*targetid*.KTAF0.AO
TranClass - Action – Set Maxactive	Can the user issue the SET command from the CTRNCLA views to modify the maximum number of active tasks for the class? **Default Entity Name:** BBM.&SERVER.CICS.&CONTEXT.SETTCLA.MAXACT **Entity Name After Substitution:** BBM.*bbissid*.CICS.*targetid*.SETTCLA.MAXACT
TranClass - Action – Set Purge Threshold	Can the user issue the SET command from the CTRNCLA views to modify the purge threshold for the class? **Default Entity Name:** BBM.&SERVER.CICS.&CONTEXT.SETTCLA.PRGTHRSH **Entity Name After Substitution:** BBM.*bbissid*.CICS.*targetid*.SETTCLA.PRGTHRSH
Transaction History - Table Data	Can the user access CICS transaction history table data? **Default Entity Name:** BBM.&PRODUCT.&CONTEXT.&INTTABLE.OD **Entity Name after Substitution:** BBM.MVCICS.*targetid*.KT6E0.OD

Table 20. Resource Definitions for MAINVIEW for CICS (Continued)

Resource name in SERDEF view	Resource definition and considerations
TS Queue - Table Data	Can the user access CICS temporary storage queue table data? **Default Entity Name:** BBM.&PRODUCT.&CONTEXT.&INTTABLE.OD **Entity Name after Substitution:** BBM.MVCICS.*targetid*.KTE10.OD
TS Queue - Any Action	Can the user issue any action commands from the TSQUEUE views? **Default Entity Name:** BBM.&PRODUCT.&CONTEXT.&INTTABLE.AO **Entity Name After Substitution:** BBM.MVCICS.*targetid*.KTE10.AO
Default - TS Queue Purge Action	Can the user purge a temporary storage queue (from the TSQUEUE views) or a shared temporary storage queue (from the TSQUECF views)? This is the default resource definition for the following resources: • TS Queue - Action - Purge • Cpling Fac TS Queue - Action - Purge **Default Entity Name:** BBM.&SERVER.CICS.&CONTEXT.ALTTSUT.PURGETS **Entity Name After Substitution:** BBM.*bbissid*.CICS.*targetid*.ALTTSUT.PURGETS
TS Queue - Action – Purge	Can the user issue the PUR command from the TSQUEUE views to purge a CICS temporary storage queue? **Default Entity Name:** BBM.&SERVER.CICS.&CONTEXT.ALTTSUT.PURGETS **Entity Name After Substitution:** BBM.*bbissid*.CICS.*targetid*.ALTTSUT.PURGETS
Txn File History - Table Data	Can the user access CICS transaction file history table data? **Default Entity Name:** BBM.&PRODUCT.&CONTEXT.&INTTABLE.OD **Entity Name after Substitution:** BBM.MVCICS.*targetid*.KF6E0.OD
Txn History Parms - Table Data	Can the user access CICS transaction history parameters table data? **Default Entity Name:** BBM.&PRODUCT.&CONTEXT.&INTTABLE.OD **Entity Name after Substitution:** BBM.MVCICS.*targetid*.KC6E0.OD
Txn History Parms - Any Action	Can the user issue any of the CICS transaction history parameter commands? **Default Entity Name:** BBM.&PRODUCT.&CONTEXT.&INTTABLE.AO **Entity Name after Substitution:** BBM.MVCICS.*targetid*.KC6E0.AO
Txn History Parms - Action - Save	Can the user issue the CICS transaction history parameter SAV command to save an updated parameter set? **Default Entity Name:** BBM.&PRODUCT.&CONTEXT.&INTTABLE.&INTACTION.OA **Entity Name after Substitution:** BBM.MVCICS.*targetid*.KC6E0.SAVE.OA
Workload Definitions - Table Data	Can the user access workload definition table data? **Default Entity Name:** BBM.&PRODUCT.&CONTEXT.&INTTABLE.OD **Entity Name after Substitution:** BBM.MVCICS.*targetid*.KAB10.OD

Table 20. Resource Definitions for MAINVIEW for CICS (Continued)

Resource name in SERDEF view	Resource definition and considerations
Workload Definitions - Any Action	Can the user enter any commands from workload definitions? **Default Entity Name:** BBM.&PRODUCT.&CONTEXT.&INTTABLE.AO **Entity Name after Substitution:** BBM.MVCICS.*targetid*.KAB10.AO
Workload Definitions - Action - Install	Can the user install workload definitions? **Default Entity Name:** BBM.&PRODUCT.&CONTEXT.&INTTABLE.&INTACTION.OA **Entity Name after Substitution:** BBM.MVCICS.*targetid*.KAB10.OA
Workload Definitions - Action - Edit	Can the user edit workload definitions? **Default Entity Name:** BBM.&PRODUCT.&CONTEXT.&INTTABLE.&INTACTION.OA **Entity Name after Substitution:** BBM.MVCICS.*targetid*.KAB10.*actionid*.OA
Workload Definitions - Alter Data Set	Can the user alter workload definition data sets? **Entity Name:** &DSN

MAINVIEW for DATA ACCELERATOR Compression

To disable, enable, or customize resource access authorization requests to the ESM for a MAINVIEW for DATA ACCELERATOR Compression security resource:

- Display the SERDEFL view in MAINVIEW for DATA ACCELERATOR Compression, as described in "Displaying a List of Members using the SERDEFL View" on page 186.
- Select the member you want to change that has a **Product** field of `MVDAC`.

A total of four unique entity names control all MAINVIEW for DATA ACCELERATOR Compression resources. To enable or disable all security for MAINVIEW for DATA ACCELERATOR Compression, you need only disable or enable the following high-level resources.

- Default - Table Data
- Default - Any Table Actions
- Default - Specific Table Action
- Any Action (MVDAC Views)

The following table lists all resources that are protected by MAINVIEW for DATA ACCELERATOR Compression. The **Default Entity Name** is the entity name shared by a set of similar resources and is used for high-level control of the entire set. The **Entity Name after Substitution** is the entity name with any subsituted symbolic values for a particular resource. For a description of how the symbolics are used, see page 133.

The class name for all resources, unless otherwise indicated, is `$BBM`, which is automatically transformed to external resource class `FACILITY`.

Table 21. Resource Definitions for MAINVIEW for DATA ACCELERATOR Compression

Resource name in SERDEF view	Resource definition and considerations
Default - Table Data	Can the user acess a view in MAINVIEW for DATA ACCELERATOR Compression? **Default Entity Name:** BBM.&PRODUCT.&CONTEXT.&INTTABLE.OD **Entity Name after Substitution:** BBM.MVDAC.*targetid.tableid*.OD
Default - Any Table Actions	Can the user enter a view action for the current MAINVIEW for DATA ACCELERATOR Compression view? **Default Entity Name:** BBM.&PRODUCT.&CONTEXT.&INTTABLE.AO **Entity Name after Substitution:** BBM.MVDAC.*targetid.tableid*.AO
Default - Specific Table Action	Can the user enter specific view actions in specific MAINVIEW for DATA ACCELERATOR Compression views? **Default Entity Name:** BBM.&PRODUCT.&CONTEXT.&INTTABLE.OA **Entity Name after Substitution:** BBM.MVDAC.*targetid.tableid*.OA
Any Action (MVDAC Views)	Can the user enter a view action? **Default Entity Name:** BBM.&PRODUCT.&CONTEXT.&INTTABLE.AA **Entity Name after Substitution:** BBM.MVDAC.*targetid.tableid*.AA

Table 21. Resource Definitions for MAINVIEW for DATA ACCELERATOR Compression (Continued)

Resource name in SERDEF view	Resource definition and considerations
DAC Statistics - Table Data	Can the user view the DAC Statistics? **Default Entity Name:** BBM.&PRODUCT.&CONTEXT.&INTTABLE.OD **Entity Name after Substitution:** BBM.MVDAC.*targetid*.DC200.OD
DAC Regiset Statistics - Table Data	Can the user view the DAC Register Statistics? **Default Entity Name:** BBM.&PRODUCT.&CONTEXT.&INTTABLE.OD **Entity Name after Substitution:** BBM.MVDAC.*targetid*.DC500.OD
DAC SMS Statistics - Table Data	Can the user view the DAC SMS Statistics? **Default Entity Name:** BBM.&PRODUCT.&CONTEXT.&INTTABLE.OD **Entity Name after Substitution:** BBM.MVDAC.*targetid*.DC600.OD
MVS Catalog - Table Data	Can the user view the MVS Catalog? **Default Entity Name:** BBM.&PRODUCT.&CONTEXT.&INTTABLE.OD **Entity Name after Substitution:** BBM.MVDAC.*targetid*.DC300.OD

MAINVIEW for DB2 Resources

To disable, enable, or customize resource access authorization requests to the ESM for a MAINVIEW for DB2 security resource:

1. Display the SERDEFL view in MAINVIEW for DB2, as described in "Displaying a List of Members using the SERDEFL View" on page 186.
2. Select the member you want to change that has a **Product** field value of `MVDB2`.

A total of five unique entity names control all MAINVIEW for DB2 resources. To enable or disable all security for MAINVIEW for DB2, you need only disable or enable all of the following high-level resources:

- Default - Table Data
- Default - Any Table Actions
- Default - Alter Data Set
- Default - Specific Table Actions
- Any Action (MAINVIEW for DB2 Views)

The following table lists all the security resources that are protected by MAINVIEW for DB2. The **Default Entity Name** is the entity name shared by a set of similar resources and is used for high-level control of the entire set. The **Entity Name after Substitution** is the entity name with any substituted symbolic values for a particular resource. For a description of how the symbolics are used, see page 133.

The class name for all resources, unless otherwise indicated, is `$BBM`, which is usually, and by default, transformed to external resource class `FACILITY`.

Table 22. Resource Definitions for MAINVIEW for DB2

Resource name in SERDEF view	Resource definition and considerations
Default - Table Data	Can the user access MAINVIEW for DB2 views? **Default Entity Name:** BBM.&PRODUCT.&CONTEXT.&INTTABLE.OD **Entity Name after Substitution:** BBM.MVDB2.*targetid*.*tableid*.OD
Default - Any Table Actions	Can the user enter any view commands from MAINVIEW for DB2 views? **Default Entity Name:** BBM.&PRODUCT.&CONTEXT.&INTTABLE.AO **Entity Name after Substitution:** BBM.MVDB2.*targetid*.*tableid*.AO
Default - Alter Data Set	Can the user alter MAINVIEW for DB2 data sets? **Class Name:** DATASET **Entity Name:** &DSN
Default - Specific Table Action	Can the user enter specific view commands from MAINVIEW for DB2 views? **Default Entity Name:** BBM.&PRODUCT.&CONTEXT.&INTTABLE.&INTACTION.OA **Entity Name after Substitution:** BBM.MVDB2.*targetid*.*tableid*. *actionid*.OA

Table 22. Resource Definitions for MAINVIEW for DB2 (Continued)

Resource name in SERDEF view	Resource definition and considerations
Any Action - (MAINVIEW for DB2 Views)	Can the user enter any command from MAINVIEW for DB2 views? **Default Entity Name:** BBM.&PRODUCT.&CONTEXT.AA **Entity Name after Substitution:** BBM.MVDB2.*targetid*.AA
Appl Monitor - Table Data	Can the user access application monitor table data? **Default Entity Name:** BBM.&PRODUCT.&CONTEXT.&INTTABLE.OD **Entity Name after Substitution:** BBM.MVDB2.*targetid*.PAA1Q.OD
Application Workload - Table Data	Can the user access application workload table data? **Default Entity Name:** BBM.&PRODUCT.&CONTEXT.&INTTABLE.OD **Entity Name after Substitution:** BBM.MVDB2.*targetid*.PAA1J.OD
Authorization Failures CDC0140 - Table Data	Can the user access DB2 authorization failures table data? **Default Entity Name:** BBM.&PRODUCT.&CONTEXT.&INTTABLE.OD **Entity Name after Substitution:** BBM.MVDB2.*targetid*.PC8C0.OD
BufferPool - Table Data	Can the user access buffer pool table data? **Default Entity Name:** BBM.&PRODUCT.&CONTEXT.&INTTABLE.OD **Entity Name after Substitution:** BBM.MVDB2.*targetid*.PBF00.OD
Data Set Opens CDC00107 - Table Data	Can the user access DB2 data set open and close table data? **Default Entity Name:** BBM.&PRODUCT.&CONTEXT.&INTTABLE.OD **Entity Name after Substitution:** BBM.MVDB2.*targetid*.PC6B0.OD
DB2 Commands CDC0090 - Table Data	Can the user access DB2 commands table data? **Default Entity Name:** BBM.&PRODUCT.&CONTEXT.&INTTABLE.OD **Entity Name after Substitution:** BBM.MVDB2.*targetid*.PC5A0.OD
Dynamic SQL Cache - Table Data	Can the user access dynamic SQL cache table data? **Default Entity Name:** BBM.&PRODUCT.&CONTEXT.&INTTABLE.OD **Entity Name after Substitution:** BBM.MVDB2.*targetid*.PD100.OD
IoActivity - Table Data	Can the user access I/O activity (page set) table data? **Default Entity Name:** BBM.&PRODUCT.&CONTEXT.&INTTABLE.OD **Entity Name after Substitution:** BBM.MVDB2.*targetid*.PI010.OD
LockOuts - Table Data	Can the user access lockout table data? **Default Entity Name:** BBM.&PRODUCT.&CONTEXT.&INTTABLE.OD **Entity Name after Substitution:** BBM.MVDB2.*targetid*.PL020.OD

Table 22. Resource Definitions for MAINVIEW for DB2 (Continued)

Resource name in SERDEF view	Resource definition and considerations
Monitor - Table Data	Can the user access application monitor table data? **Default Entity Name:** BBM.&PRODUCT.&CONTEXT.&INTTABLE.OD **Entity Name after Substitution:** BBM.MVDB2.*targetid*.PAA10.OD
RIDLIST CDC0125 - Table Data	Can the user access RID list processing table data? **Default Entity Name:** BBM.&PRODUCT.&CONTEXT.&INTTABLE.OD **Entity Name after Substitution:** BBM.MVDB2.*targetid*.PC7D0.OD
SQL Cache Statement Data	Can the user access SQL statement table data? **Default Entity Name:** BBM.&PRODUCT.&CONTEXT.&INTTABLE.OD **Entity Name after Substitution:** BBM.MVDB2.*targetid*.PD200.OD
Status - Table Data	Can the user access DB2 status table data? **Default Entity Name:** BBM.&PRODUCT.&CONTEXT.&INTTABLE.OD **Entity Name after Substitution:** BBM.MVDB2.*targetid*.PS100.OD
Status - Any Action	Can the user enter any action in the DB2 status views? **Default Entity Name:** BBM.&PRODUCT.&CONTEXT.&INTTABLE.OD **Entity Name after Substitution:** BBM.MVDB2.*targetid*.PS100.AO
Status - Action - SCSTATS	Can the user enter the SQL cache start/stop statistics collection command in the STCACHE status view? **Default Entity Name:** BBM.&PRODUCT.&CONTEXT.&INTTABLE.OD **Entity Name after Substitution:** BBM.MVDB2.*targetid*.PS100.SCSTATS.OA
Thread Intervals - Table Data	Can the user access thread interval history table data? **Default Entity Name:** BBM.&PRODUCT.&CONTEXT.&INTTABLE.OD **Entity Name after Substitution:** BBM.MVDB2.*targetid*.PT200.OD
TLDS and MVDB2/DC Traces - Table Data	Can the user access TLDS and MVDB2/DC trace log table data? **Default Entity Name:** BBM.&PRODUCT.&CONTEXT.&INTTABLE.OD **Entity Name after Substitution:** BBM.MVDB2.*targetid*.PA720.OD
Users - Table Data	Can the user access users (thread) table data? **Default Entity Name:** BBM.&PRODUCT.&CONTEXT.&INTTABLE.OD **Entity Name after Substitution:** BBM.MVDB2.*targetid*.PU010.OD
Workload Definitions - Table Data	Can the user access workload definition table data? **Default Entity Name:** BBM.&PRODUCT.&CONTEXT.&INTTABLE.OD **Entity Name after Substitution:** BBM.MVDB2.*targetid*.PAB10.OD

Table 22. Resource Definitions for MAINVIEW for DB2 (Continued)

Resource name in SERDEF view	Resource definition and considerations
Workload Definitions - Any Action	Can the user enter any commands from MAINVIEW for DB2 workload definitions? **Default Entity Name: Entity Name after Substitution:** BBM.&PRODUCT.&CONTEXT.&INTTABLE.AO **Entity Name after Substitution:** BBM.MVDB2.*targetid*.PAB10.OA
Workload Definitions - Action - Install	Can the user install MAINVIEW for DB2 workload definitions? **Default Entity Name:** BBM.&PRODUCT.&CONTEXT.&INTTABLE.&INTACTION.OA **Entity Name after Substitution:** BBM.MVDB2.*targetid*.PAB10.*actionid*.OA
Workload Definitions - Action - Edit	Can the user edit MAINVIEW for DB2 workload definitions? **Default Entity Name:** BBM.&PRODUCT.&CONTEXT.&INTTABLE.&INTACTION.OA **Entity Name after Substitution:** BBM.MVDB2.*targetid*.PAB10.*actionid*.OA
Workload Definitions - Alter Data Set	Can the user alter MAINVIEW for DB2 workload definitions? **Class Name:** DATASET **Entity Name:** &DSN
ZPARM - Table Data	Can the user access ZPARM table data? **Default Entity Name:** BBM.&PRODUCT.&CONTEXT.&INTTABLE.OD **Entity Name after Substitution:** BBM.MVDB2.*targetid*.PZ100.OD
ZPARM - Any Action	Can the user enter any action in the ZPARM views to change DB2 parameters through OPERTUNE? **Default Entity Name:** BBM.&PRODUCT.&CONTEXT.&INTTABLE.AO **Entity Name after Substitution:** BBM.MVDB2.*targetid*.PZ100.AO

MAINVIEW for IMS Online and MAINVIEW for DBCTL Resources

To disable, enable, or customize resource access authorization requests to the ESM for a MAINVIEW for IMS Online or MAINVIEW for DBCTL resource:

1. Display the SERDEFL view in MAINVIEW for IMS Online or MAINVIEW for DBCTL, as described in "Displaying a List of Members using the SERDEFL View" on page 186.
2. Select the member you want to change that has a **Product** field value of `MVIMS`.

A total of five unique entity names control all MAINVIEW for IMS Online and MAINVIEW for DBCTL resources. To enable or disable all security for MAINVIEW for IMS Online and MAINVIEW for DBCTL, you need only disable or enable the following high-level resources:

- Default - Table Data
- Default - Any Table Actions
- Default - Alter Data Set
- Default - Specific Table Actions
- Any Action (MAINVIEW for IMS Online or MAINVIEW for DBCTL Views)

The following table lists all resources protected by MAINVIEW for IMS Online and MAINVIEW for DBCTL. The **Default Entity Name** is the entity name shared by a set of similar resources and is used for high-level control of the entire set. The **Entity Name after Substitution** is the entity name with any substituted symbolic values for a particular resource. For a description of how the symbolics are used, see page 133.

The class name for all resources, unless otherwise indicated, is `$BBM`, which is usually, and by default, transformed to external resource class `FACILITY`.

Table 23. Resource Definitions for MAINVIEW for IMS Online and MAINVIEW for DBCTL

Resource name in SERDEF view	**Resource definition and considerations**
Default - Table Data	Can the user access a MAINVIEW for IMS or MAINVIEW for DBCTLview? This default resource controls a subset of similar resources. Enabling, disabling, or changing this resource automatically enables, disables, or changes all resources with the following entity name. **Default Entity Name:** BBM.&PRODUCT.&CONTEXT.&INTTABLE.OD **Entity Name after Substitution:** BBM.MVIMS.*targetid*.@DFLT.OD Specific resources belonging to this subset can be enabled, disabled, or changed on an individual basis.
Default - Any Table Actions	Can the user enter a view action for the current view? **Default Entity Name:** BBM.&PRODUCT.&CONTEXT.&INTTABLE.AO **Entity Name after Substitution:** BBM.MVIMS.*targetid.tableid.*AO
Default - Specific Table Action	Can the user enter specific view actions from views? **Default Entity Name:** BBM.&PRODUCT.&CONTEXT.&INTTABLE.&INTACTION.OA **Entity Name after Substitution:** BBM.MVIMS.*targetid.tableid.actionid.*OA

Table 23. Resource Definitions for MAINVIEW for IMS Online and MAINVIEW for DBCTL (Continued)

Resource name in SERDEF view	Resource definition and considerations
Default - Alter Data Set	Can the user access a data set? **Class Name:** DATASET **Entity Name:** &DSN
Any Action (MVIMS and MVDBC Views)	Can the user enter a view action in the current MVIMS or MVDBC product? **Default Entity Name:** BBM.&PRODUCT.&CONTEXT.AA **Entity Name after Substitution:** BBM.MVIMS.*targetid*.AA
Appl Monitor - Table Data	Can the user access data for the application monitor view? **Default Entity Name:** BBM.&PRODUCT.&CONTEXT.&INTTABLE.OD **Entity Name after Substitution:** BBM.MVIMS.*targetid*.FAA1Q.OD
Appl Workload- Table Data	Can the user access data for application workload views? **Default Entity Name:** BBM.&PRODUCT.&CONTEXT.&INTTABLE.OD **Entity Name after Substitution:** BBM.MVIMS.*targetid*.FAA1J.OD
Balancing Group - Table Data	Can the user access data for balancing group views? **Default Entity Name:** BBM.&PRODUCT.&CONTEXT.&INTTABLE.OD **Entity Name after Substitution:** BBM.MVIMS.*targetid*.FPA50.OD
Class Activity - Table Data	Can the user access data for class activity views? **Default Entity Name:** BBM.&PRODUCT.&CONTEXT.&INTTABLE.OD **Entity Name after Substitution:** BBM.MVIMS.*targetid*.FPA30.OD
CQS Qtype Record	Can the user access data for CQS shared message queue information views? **Default Entity Name:** BBM.&PRODUCT.&CONTEXT.&INTTABLE.OD **Entity Name after Substitution:** BBM.MVIMS.*targetid*.FPD30.OD
Database - Table Data	Can the user access data for database views? **Default Entity Name:** BBM.&PRODUCT.&CONTEXT.&INTTABLE.OD **Entity Name after Substitution:** BBM.MVIMS.*targetid*.FPA70.OD
Database - Any Action	Can the user enter actions for database views? **Default Entity Name:** BBM.&PRODUCT.&CONTEXT.&INTTABLE.AO **Entity Name after Substitution:** BBM.MVIMS.*targetid*.FPA70.AO
Database - Action - DBD	Can the user enter the dump database (D) action for database views? **Default Entity Name:** BBM.&PRODUCT.&CONTEXT.&INTTABLE.&INTACTION.AO **Entity Name after Substitution:** BBM.MVIMS.*targetid*.FPA70.DBD.AO

Table 23. Resource Definitions for MAINVIEW for IMS Online and MAINVIEW for DBCTL (Continued)

Resource name in SERDEF view	Resource definition and considerations
Database - Action - DBR	Can the user enter the recover database (R) action for database views? **Default Entity Name:** BBM.&PRODUCT.&CONTEXT.&INTTABLE.&INTACTION.AO **Entity Name after Substitution:** BBM.MVIMS.*targetid*.FPA70.DBR.AO
Database - Action - DBR NOFEOV	Can the user enter the recover database with the NOFEOV option (N) action for database views? **Default Entity Name:** BBM.&PRODUCT.&CONTEXT.&INTTABLE.&INTACTION.AO **Entity Name after Substitution:** BBM.MVIMS.*targetid*.FPA70.DBRN.AO
Database - Action - Lock	Can the user enter the lock database (L) action for database views? **Default Entity Name:** BBM.&PRODUCT.&CONTEXT.&INTTABLE.&INTACTION.AO **Entity Name after Substitution:** BBM.MVIMS.*targetid*.FPA70.LOCK.AO
Database - Action - Start	Can the user enter the start database (S) action for database views? **Default Entity Name:** BBM.&PRODUCT.&CONTEXT.&INTTABLE.&INTACTION.AO **Entity Name after Substitution:** BBM.MVIMS.*targetid*.FPA70.START.AO
Database - Action - Stop	Can the user enter the stop database (P) action for database views? **Default Entity Name:** BBM.&PRODUCT.&CONTEXT.&INTTABLE.&INTACTION.AO **Entity Name after Substitution:** BBM.MVIMS.*targetid*.FPA70.STOP.AO
Database - Action - UnLock	Can the user enter the unlock (U) action for database views? **Default Entity Name:** BBM.&PRODUCT.&CONTEXT.&INTTABLE.&INTACTION.AO **Entity Name after Substitution:** BBM.MVIMS.*targetid*.FPA70.UNLOCK.AO
Database Activity Record	Can the user access data for database activity views? **Default Entity Name:** BBM.&PRODUCT.&CONTEXT.&INTTABLE.OD **Entity Name after Substitution:** BBM.MVIMS.*targetid*.FPD20.OD
DD Record	Can the user access data for DD views? **Default Entity Name:** BBM.&PRODUCT.&CONTEXT.&INTTABLE.OD **Entity Name after Substitution:** BBM.MVIMS.*targetid*.FPD10.OD
DLI Call Status	Can the user access data for DL/I call status views? **Default Entity Name:** BBM.&PRODUCT.&CONTEXT.&INTTABLE.OD **Entity Name after Substitution:** BBM.MVIMS.*targetid*.FP410.OD
FP Area - Table Data	Can the user access data for Fast Path area views? **Default Entity Name:** BBM.&PRODUCT.&CONTEXT.&INTTABLE.OD **Entity Name after Substitution:** BBM.MVIMS.*targetid*.FPA80.OD

Table 23. Resource Definitions for MAINVIEW for IMS Online and MAINVIEW for DBCTL (Continued)

Resource name in SERDEF view	Resource definition and considerations
FP Area - Any Action	Can the user enter actions for Fast Path area views? **Default Entity Name:** BBM.&PRODUCT.&CONTEXT.&INTTABLE.AO **Entity Name after Substitution:** BBM.MVIMS.*targetid*.FPA80.AO
FP Area - Action - DBR	Can the user enter the recover area (R) action for Fast Path area views? **Default Entity Name:** BBM.&PRODUCT.&CONTEXT.&INTTABLE.&INTACTION.AO **Entity Name after Substitution:** BBM.MVIMS.*targetid*.FPA80.DBR.AO
FP Area - Action - Start	Can the user enter the start area (S) action for Fast Path area views? **Default Entity Name:** BBM.&PRODUCT.&CONTEXT.&INTTABLE.&INTACTION.AO **Entity Name after Substitution:** BBM.MVIMS.*targetid*.FPA80.START.AO
FP Area - Action - Stop	Can the user enter the stop area (P) action for Fast Path area views? **Default Entity Name:** BBM.&PRODUCT.&CONTEXT.&INTTABLE.&INTACTION.AO **Entity Name after Substitution:** BBM.MVIMS.*targetid*.FPA80.STOP.AO
Governer Selector	Can the user access data for the governor selector view? **Default Entity Name:** BBM.&PRODUCT.&CONTEXT.&INTTABLE.OD **Entity Name after Substitution:** BBM.MVIMS.*targetid*.FPB20.OD
IMS Data Set Information	Can the user access data for IMS data set information views? **Default Entity Name:** BBM.&PRODUCT.&CONTEXT.&INTTABLE.OD **Entity Name after Substitution:** BBM.MVIMS.*targetid*.FPAF0.OD
IMS Overview - Table Data	Can the user access data for overview views? **Default Entity Name:** BBM.&PRODUCT.&CONTEXT.&INTTABLE.OD **Entity Name after Substitution:** BBM.MVIMS.*targetid*.FPA10.OD
Installed Products - Table Data	Can the user access data for the installed products views? **Default Entity Name:** BBM.&PRODUCT.&CONTEXT.&INTTABLE.OD **Entity Name after Substitution:** BBM.MVIMS.*targetid*.FPD40.OD
IRLM Lock Record	Can the user access data for IRLM views? **Default Entity Name:** BBM.&PRODUCT.&CONTEXT.&INTTABLE.OD **Entity Name after Substitution:** BBM.MVIMS.*targetid*.FP310.OD
IUsers - Table Data	Can the user access data for terminal/user views? **Default Entity Name:** BBM.&PRODUCT.&CONTEXT.&INTTABLE.OD **Entity Name after Substitution:** BBM.MVIMS.*targetid*.FPAA0.OD

Table 23. Resource Definitions for MAINVIEW for IMS Online and MAINVIEW for DBCTL (Continued)

Resource name in SERDEF view	Resource definition and considerations
IUsers - Any Action	Can the user enter actions for terminal/user views? **Default Entity Name:** BBM.&PRODUCT.&CONTEXT.&INTTABLE.AO **Entity Name after Substitution:** BBM.MVIMS.*targetid*.FPAA0.AO
IUsers - Action - STARTLTERM	Can the user enter the start LTERM (SL) action for terminal/user views? **Default Entity Name:** BBM.&PRODUCT.&CONTEXT.&INTTABLE.&INTACTION.AO **Entity Name after Substitution:** BBM.MVIMS.*targetid*.FPAA0.STARTLTERM.AO
IUsers - Action - STARTUSER	Can the user enter the start user (SU) action for terminal/user views? **Default Entity Name:** BBM.&PRODUCT.&CONTEXT.&INTTABLE.&INTACTION.AO **Entity Name after Substitution:** BBM.MVIMS.*targetid*.FPAA0.STARTUSER.AO
IUsers - Action - STOPLTERM	Can the user enter the stop LTERM (PL) action for terminal/user views? **Default Entity Name:** BBM.&PRODUCT.&CONTEXT.&INTTABLE.&INTACTION.AO **Entity Name after Substitution:** BBM.MVIMS.*targetid*.FPAA0.STOPLTERM.AO
IUsers - Action - STOPUSER	Can the user enter the stop user (PU) action for terminal/user views? **Default Entity Name:** BBM.&PRODUCT.&CONTEXT.&INTTABLE.&INTACTION.AO **Entity Name after Substitution:** BBM.MVIMS.*targetid*.FPAA0.STOPUSER.AO
Monitor - Table Data	Can the user access data for monitor views? **Default Entity Name:** BBM.&PRODUCT.&CONTEXT.&INTTABLE.OD **Entity Name after Substitution:** BBM.MVIMS.*targetid*.FAA10.OD
OTMA Record	Can the user access data for OTMA views? **Default Entity Name:** BBM.&PRODUCT.&CONTEXT.&INTTABLE.OD **Entity Name after Substitution:** BBM.MVIMS.*targetid*.FP510.OD
Pgm DB Tran Cross Reference	Can the user access data for cross-reference views? **Default Entity Name:** BBM.&PRODUCT.&CONTEXT.&INTTABLE.OD **Entity Name after Substitution:** BBM.MVIMS.*targetid*.FP710.OD
PlexUs System Status	Can the user access data for plexus system status views? **Default Entity Name:** BBM.&PRODUCT.&CONTEXT.&INTTABLE.OD **Entity Name after Substitution:** BBM.MVIMS.*targetid*.FPAB0.OD
Program - Table Data	Can the user access data for program views? **Default Entity Name:** BBM.&PRODUCT.&CONTEXT.&INTTABLE.OD **Entity Name after Substitution:** BBM.MVIMS.*targetid*.FP610.OD

Table 23. Resource Definitions for MAINVIEW for IMS Online and MAINVIEW for DBCTL (Continued)

Resource name in SERDEF view	Resource definition and considerations
Program - Any Action	Can the user enter actions for program views? **Default Entity Name:** BBM.&PRODUCT.&CONTEXT.&INTTABLE.AO **Entity Name after Substitution:** BBM.MVIMS.*targetid*.FP610.AO
Program - Action - Lock	Can the user enter the lock program (L) action for program views? **Default Entity Name:** BBM.&PRODUCT.&CONTEXT.&INTTABLE.&INTACTION.AO **Entity Name after Substitution:** BBM.MVIMS.*targetid*.FP610.LOCK.AO
Program - Action - Start	Can the user enter the start program (S) action for program views? **Default Entity Name:** BBM.&PRODUCT.&CONTEXT.&INTTABLE.&INTACTION.AO **Entity Name after Substitution:** BBM.MVIMS.*targetid*.FP610.START.AO
Program - Action - Stop	Can the user enter the stop program (P) action for program views? **Default Entity Name:** BBM.&PRODUCT.&CONTEXT.&INTTABLE.&INTACTION.AO **Entity Name after Substitution:** BBM.MVIMS.*targetid*.FP610.STOP.AO
Program - Action - UnLock	Can the user enter the unlock program (U) action for program views? **Default Entity Name:** BBM.&PRODUCT.&CONTEXT.&INTTABLE.&INTACTION.AO **Entity Name after Substitution:** BBM.MVIMS.*targetid*.FP610.UNLOCK.AO
Region - Table Data	Can the user access data for region views? **Default Entity Name:** BBM.&PRODUCT.&CONTEXT.&INTTABLE.OD **Entity Name after Substitution:** BBM.MVIMS.*targetid*.FPA60.OD
Region - Any Action	Can the user enter actions for region views? **Default Entity Name:** BBM.&PRODUCT.&CONTEXT.&INTTABLE.AO **Entity Name after Substitution:** BBM.MVIMS.*targetid*.FPA60.AO
Region - Action - ABDump	Can the user enter the stop region abdump (PA) action for region views? **Default Entity Name:** BBM.&PRODUCT.&CONTEXT.&INTTABLE.&INTACTION.AO **Entity Name after Substitution:** BBM.MVIMS.*targetid*.FPA60.ABDUMP.AO
Region - Action - Stop	Can the user enter the stop region or DBCTL thread (P) action for region views? **Default Entity Name:** BBM.&PRODUCT.&CONTEXT.&INTTABLE.&INTACTION.AO **Entity Name after Substitution:** BBM.MVIMS.*targetid*.FPA60.STOP.AO
Region Occupancy - Table Data	Can the user access data for region occupancy views? **Default Entity Name:** BBM.&PRODUCT.&CONTEXT.&INTTABLE.OD **Entity Name after Substitution:** BBM.MVIMS.*targetid*.FPA20.OD

Table 23. Resource Definitions for MAINVIEW for IMS Online and MAINVIEW for DBCTL (Continued)

Resource name in SERDEF view	Resource definition and considerations
Region Occupancy - Any Action	Can the user enter actions for region occupancy views? **Default Entity Name:** BBM.&PRODUCT.&CONTEXT.&INTTABLE.AO **Entity Name after Substitution:** BBM.MVIMS.*targetid*.FPA20.AO
Region Occupancy - Action - ClassChg	Can the user enter the change class (CLs) action for region occupancy views? **Default Entity Name:** BBM.&PRODUCT.&CONTEXT.&INTTABLE.&INTACTION.AO **Entity Name after Substitution:** BBM.MVIMS.*targetid*.FPA20.CLASSCHG.AO
Region Occupancy - Action - StopRegn	Can the user enter the stop message processing region or DBCTL thread (P) action for region occupancy views? **Default Entity Name:** BBM.&PRODUCT.&CONTEXT.&INTTABLE.&INTACTION.AO **Entity Name after Substitution:** BBM.MVIMS.*targetid*.FPA20.STOPREGN.AO
Sampler Admin - Table Data	Can the user access data for sampler administration views? **Default Entity Name:** BBM.&PRODUCT.&CONTEXT.&INTTABLE.OD **Entity Name after Substitution:** BBM.MVIMS.*targetid*.FAB20.OD
Sampler Definitions - Any Action	Can the user enter a view action in the sampler definition views? **Default Entity Name:** BBM.&PRODUCT.&CONTEXT.&INTTABLE.AO **Entity Name after Substitution:** BBM.MVIMS.*targetid*.FAB20.A0
Sampler Definitions - Action - Edit	Can the user enter the EDIT command in sampler definition views? **Default Entity Name:** BBM.&PRODUCT.&CONTEXT.&INTTABLE.&INTACTION.OA **Entity Name after Substitution:** BBM.MVIMS.*targetid*.FAB20.EDIT.OA
Sampler Definitions - Action - Install	Can the user enter the INStall command in the sampler definitions views? **Default Entity Name:** BBM.&PRODUCT.&CONTEXT.&INTTABLE.&INTACTION.OA **Entity Name after Substitution:** BBM.MVIMS.*targetid*.FAB20.INSTALL.OA
Sampler Definitions - Alter Data Set	Can the user access a sampler definition BBPARM data set? **Class Name:** DATASET **Entity Name**: &DSN
Sampler Operations - Table Data	Can the user access data in the sampler operations views? **Default Entity Name:** BBM.&PRODUCT.&CONTEXT.&INTTABLE.OD **Entity Name after Substitution:** BBM.MVIMS.*targetid*.FAB30.OD
Sampler Operations - Any Action	Can the user enter an action in sampler operations views? **Default Entity Name:** BBM.&PRODUCT.&CONTEXT.&INTTABLE.AO **Entity Name after Substitution:** BBM.MVIMS.*targetid*.FAB30.AO

Table 23. Resource Definitions for MAINVIEW for IMS Online and MAINVIEW for DBCTL (Continued)

Resource name in SERDEF view	Resource definition and considerations
Sampler Operations - Action - Quiesce	Can the user enter the quiesce (Quiesce) command in sampler operations views? **Default Entity Name:** BBM.&PRODUCT.&CONTEXT.&INTTABLE.&INTACTION.OA **Entity Name after Substitution:** BBM.MVIMS.*targetid*.FAB30.QUIESCE.OA
Sampler Operations - Action - Start	Can the user enter the start (STArt) command in sampler operations views? **Default Entity Name:** BBM.&PRODUCT.&CONTEXT.&INTTABLE.&INTACTION.OA **Entity Name after Substitution:** BBM.MVIMS.*targetid*.FAB30.START.OA
Sampler Operations - Action - Stop	Can the user enter the stop (STOp) command in sampler operations views? **Default Entity Name:** BBM.&PRODUCT.&CONTEXT.&INTTABLE.&INTACTION.OA **Entity Name after Substitution:** BBM.MVIMS.*targetid*.FAB30.STOP.OA
Shared Message Queue Record	Can the user access data for shared message queue views? **Default Entity Name:** BBM.&PRODUCT.&CONTEXT.&INTTABLE.OD **Entity Name after Substitution:** BBM.MVIMS.*targetid*.FPA90.OD
Terminal Status	Can the user access data for terminal status views? **Default Entity Name:** BBM.&PRODUCT.&CONTEXT.&INTTABLE.OD **Entity Name after Substitution:** BBM.MVIMS.*targetid*.FPAE0.OD
Trace Datasets - Table Data	Can the user access data for trace data sets? **Default Entity Name:** BBM.&PRODUCT.&CONTEXT.&INTTABLE.OD **Entity Name after Substitution:** BBM.MVIMS.*targetid*.FP210.OD
Trace Directory Display	Can the user access data for the trace directory view? **Default Entity Name:** BBM.&PRODUCT.&CONTEXT.&INTTABLE.OD **Entity Name after Substitution:** BBM.MVIMS.*targetid*.QQ210.OD
Trace Selection Expansion Record	Can the user access data for the trace selection expansion view? **Default Entity Name:** BBM.&PRODUCT.&CONTEXT.&INTTABLE.OD **Entity Name after Substitution:** BBM.MVIMS.*targetid*.FP230.OD
Tran I/O - Table Data	Can the user access data for transaction input/output views? **Default Entity Name:** BBM.&PRODUCT.&CONTEXT.&INTTABLE.OD **Entity Name after Substitution:** BBM.MVIMS.*targetid*.FPC20.OD
Tran Latch - Table Data	Can the user access data for transaction latch views? **Default Entity Name:** BBM.&PRODUCT.&CONTEXT.&INTTABLE.OD **Entity Name after Substitution:** BBM.MVIMS.*targetid*.FPC40.OD

Table 23. Resource Definitions for MAINVIEW for IMS Online and MAINVIEW for DBCTL (Continued)

Resource name in SERDEF view	Resource definition and considerations
Tran Lock - Table Data	Can the user access data for transaction lock views? **Default Entity Name:** BBM.&PRODUCT.&CONTEXT.&INTTABLE.OD **Entity Name after Substitution:** BBM.MVIMS.*targetid*.FPC30.OD
Tran Sample Event - Table Data	Can the user access data for transaction event views? **Default Entity Name:** BBM.&PRODUCT.&CONTEXT.&INTTABLE.OD **Entity Name after Substitution:** BBM.MVIMS.*targetid*.FPC10.OD
Transaction - Table Data	Can the user access data for transaction views? **Default Entity Name:** BBM.&PRODUCT.&CONTEXT.&INTTABLE.OD **Entity Name after Substitution:** BBM.MVIMS.*targetid*.FPA40.OD
Transaction - Any Action	Can the user enter actions for transaction views? **Default Entity Name:** BBM.&PRODUCT.&CONTEXT.&INTTABLE.AO **Entity Name after Substitution:** BBM.MVIMS.*targetid*.FPA40.AO
Transaction - Action - Change	Can the user enter the change transaction (CHa) action for transaction views? **Default Entity Name:** BBM.&PRODUCT.&CONTEXT.&INTTABLE.&INTACTION.AO **Entity Name after Substitution:** BBM.MVIMS.*targetid*.FPA40.CHANGE.AO
Transaction - Action - Lock	Can the user enter the lock transaction (L) action for transaction views? **Default Entity Name:** BBM.&PRODUCT.&CONTEXT.&INTTABLE.&INTACTION.AO **Entity Name after Substitution:** BBM.MVIMS.*targetid*.FPA40.LOCK.AO
Transaction - Action - Start	Can the user enter the start transaction (S) action for transaction views? **Default Entity Name:** BBM.&PRODUCT.&CONTEXT.&INTTABLE.&INTACTION.AO **Entity Name after Substitution:** BBM.MVIMS.*targetid*.FPA40.START.AO
Transaction - Action - Stop	Can the user enter the stop transaction (P) action for transaction views? **Default Entity Name:** BBM.&PRODUCT.&CONTEXT.&INTTABLE.&INTACTION.AO **Entity Name after Substitution:** BBM.MVIMS.*targetid*.FPA40.STOP.AO
Transaction - Action - PStop	Can the user enter the stop transaction message scheduling (PS) action for transaction views? **Default Entity Name:** BBM.&PRODUCT.&CONTEXT.&INTTABLE.&INTACTION.AO **Entity Name after Substitution:** BBM.MVIMS.*targetid*.FPA40.PSTOP.AO
Transaction - Action - Purge	Can the user enter the stop transaction input messages (PU) action for transaction views? **Default Entity Name:** BBM.&PRODUCT.&CONTEXT.&INTTABLE.&INTACTION.AO **Entity Name after Substitution:** BBM.MVIMS.*targetid*.FPA40.PURGE.AO

Table 23. Resource Definitions for MAINVIEW for IMS Online and MAINVIEW for DBCTL (Continued)

Resource name in SERDEF view	Resource definition and considerations
Transaction - Action - Unlock	Can the user enter the unlock transaction (U) action for transaction views? **Default Entity Name:** BBM.&PRODUCT.&CONTEXT.&INTTABLE.&INTACTION.AO **Entity Name after Substitution:** BBM.MVIMS.*targetid*.FPA40.UNLOCK.AO
Transaction Trace Record	Can the user access data for transaction trace views? **Default Entity Name:** BBM.&PRODUCT.&CONTEXT.&INTTABLE.OD **Entity Name after Substitution:** BBM.MVIMS.*targetid*.FP220.OD
Transactions with volume and IO	Can the user access data for transactions with volume and I/O views? **Default Entity Name:** BBM.&PRODUCT.&CONTEXT.&INTTABLE.OD **Entity Name after Substitution:** BBM.MVIMS.*targetid*.FPAB0.OD
Workload Definitions - Table Data	Can the user access data for workload definition views? **Default Entity Name:** BBM.&PRODUCT.&CONTEXT.&INTTABLE.OD **Entity Name after Substitution:** BBM.MVIMS.*targetid*.FAB10.OD
Workload Definitions - Any Action	Can the user enter actions for workload definition views? **Default Entity Name:** BBM.&PRODUCT.&CONTEXT.&INTTABLE.AO **Entity Name after Substitution:** BBM.MVIMS.*targetid*.FAB10.AO
Workload Definitions - Action - Edit	Can the user enter the edit (EDIT) command in workload definition views? **Default Entity Name:** BBM.&PRODUCT.&CONTEXT.&INTTABLE.&INTACTION.OA **Entity Name after Substitution:** BBM.MVIMS.*targetid*.FAB10.EDIT.OA
Workload Definitions - Action - Install	Can the user enter the install (INStall) command in workload definition views? **Default Entity Name:** BBM.&PRODUCT.&CONTEXT.&INTTABLE.&INTACTION.OA **Entity Name after Substitution:** BBM.MVIMS.*targetid*.FAB10.INSTALL.OA
Workload Definitions - Alter Data Set	Can the user access a data set where workload definitions reside? **Class Name:** DATASET **Entity Name:** &DSN

MAINVIEW for IP Resources

To disable, enable, or customize resource access authorization requests to the ESM for a MAINVIEW for IP resource:

1. Display the SERDEFL view in MAINVIEW for IP, as described in "Displaying a List of Members using the SERDEFL View" on page 186.
2. Select the member you want to change that has a **Product** field value of `MVIP`.

A single entity name controls all MAINVIEW for IP resources. To enable or disable all security for MAINVIEW for IP, you need only disable or enable the following high-level resource:

- Default - Table Data

The following table lists all the resources that are protected by MAINVIEW for IP. The **Default Entity Name** is the entity name shared by a set of similar resources and is used for high-level control of the entire set. The **Entity Name after Substitution** is the entity name with any substituted symbolic values for a particular resource.

The class name for all resources, unless otherwise indicated, is `$BBM`, which is usually, and by default, transformed to external resource class `FACILITY`.

Table 24. Resource Definitions for MAINVIEW for IP

Resource name in SERDEF view	Resource definition and considerations
Storage CSM - Table Data	Can the user see CSM Storage information? **Default Entity Name:** BBM.&PRODUCT.&CONTEXT.&INTTABLE.OD **Entity Name after Substitution:** BBM.MVIP.*targetid*.SP600.OD
Storage VTAM - Table Data	Can the user see CSA and VTAM Storage information? **Default Entity Name:** BBM.&PRODUCT.&CONTEXT.&INTTABLE.OD **Entity Name after Substitution:** BBM.MVIP.*targetid*.SP610.OD
SLA Policy - Table Data	Can the user see SLA Policy information? **Default Entity Name:** BBM.&PRODUCT.&CONTEXT.&INTTABLE.OD **Entity Name after Substitution:** BBM.MVIP.*targetid*.SP620.OD
Web Cache - Table Data	Can the user see Web Cache information? **Default Entity Name:** BBM.&PRODUCT.&CONTEXT.&INTTABLE.OD **Entity Name after Substitution:** BBM.MVIP.*targetid*.SP630.OD
FTP Server - Table Data	Can the user see FTP Server information? **Default Entity Name:** BBM.&PRODUCT.&CONTEXT.&INTTABLE.OD **Entity Name after Substitution:** BBM.MVIP.*targetid*.SP640.OD

Table 24. Resource Definitions for MAINVIEW for IP (Continued)

Resource name in SERDEF view	Resource definition and considerations
SNMP TCP - Table Data	Can the user see SNMP TCP information? **Default Entity Name:** BBM.&PRODUCT.&CONTEXT.&INTTABLE.OD **Entity Name after Substitution:** BBM.MVIP.*targetid*.SP710.OD
SNMP UDP - Table Data	Can the user see SNMP UDP information? **Default Entity Name:** BBM.&PRODUCT.&CONTEXT.&INTTABLE.OD **Entity Name after Substitution:** BBM.MVIP.*targetid*.SP720.OD
SNMP IP - Table Data	Can the user see SNMP IP information? **Default Entity Name:** BBM.&PRODUCT.&CONTEXT.&INTTABLE.OD **Entity Name after Substitution:** BBM.MVIP.*targetid*.SP730.OD
SNMP SYS - Table Data	Can the user see SNMP System information? **Default Entity Name:** BBM.&PRODUCT.&CONTEXT.&INTTABLE.OD **Entity Name after Substitution:** BBM.MVIP.*targetid*.SP740.OD
SNMP IF - Table Data	Can the user see SNMP Interface information? **Default Entity Name:** BBM.&PRODUCT.&CONTEXT.&INTTABLE.OD **Entity Name after Substitution:** BBM.MVIP.*targetid*.SP750.OD
Ping - Table Data	Can the user see Ping information? **Default Entity Name:** BBM.&PRODUCT.&CONTEXT.&INTTABLE.OD **Entity Name after Substitution:** BBM.MVIP.*targetid*.SP760.OD
Traceroute - Table Data	Can the user see Traceroute information? **Default Entity Name:** BBM.&PRODUCT.&CONTEXT.&INTTABLE.OD **Entity Name after Substitution:** BBM.MVIP.*targetid*.SP770.OD
Ping/Traceroute Connection - Table Data	Can the user see Ping and Traceroute Connection information? **Default Entity Name:** BBM.&PRODUCT.&CONTEXT.&INTTABLE.OD **Entity Name after Substitution:** BBM.MVIP.*targetid*.SP780.OD
VIPA - Table Data	Can the user see VIPA information? **Default Entity Name:** BBM.&PRODUCT.&CONTEXT.&INTTABLE.OD **Entity Name after Substitution:** BBM.MVIP.*targetid*.SP790.OD
Stack(s) Information - Table Data	Can the user see Stack information? **Default Entity Name:** BBM.&PRODUCT.&CONTEXT.&INTTABLE.OD **Entity Name after Substitution:** BBM.MVIP.*targetid*.SP800.OD

Table 24. Resource Definitions for MAINVIEW for IP (Continued)

Resource name in SERDEF view	Resource definition and considerations
Configuration - Table Data	Can the user see Configuration information? **Default Entity Name:** BBM.&PRODUCT.&CONTEXT.&INTTABLE.OD **Entity Name after Substitution:** BBM.MVIP.*targetid*.SP810.OD
Connections - Table Data	Can the user see Connections? **Default Entity Name:** BBM.&PRODUCT.&CONTEXT.&INTTABLE.OD **Entity Name after Substitution:** BBM.MVIP.*targetid*.SP820.OD
Network Devices - Table Data	Can the user see Network Devices? **Default Entity Name:** BBM.&PRODUCT.&CONTEXT.&INTTABLE.OD **Entity Name after Substitution:** BBM.MVIP.*targetid*.SP830.OD
Ports - Table Data	Can the user see Ports? **Default Entity Name:** BBM.&PRODUCT.&CONTEXT.&INTTABLE.OD **Entity Name after Substitution:** BBM.MVIP.*targetid*.SP850.OD
Routes - Table Data	Can the user see Routes? **Default Entity Name:** BBM.&PRODUCT.&CONTEXT.&INTTABLE.OD **Entity Name after Substitution:** BBM.MVIP.*targetid*.SP860.OD
Job Response - Table Data	Can the user see Job Response? **Default Entity Name:** BBM.&PRODUCT.&CONTEXT.&INTTABLE.OD **Entity Name after Substitution:** BBM.MVIP.*targetid*.SP870.OD
Port Response - Table Data	Can the user see Port Response? **Default Entity Name:** BBM.&PRODUCT.&CONTEXT.&INTTABLE.OD **Entity Name after Substitution:** BBM.MVIP.*targetid*.SP880.OD
Network Links - Table Data	Can the user see Network Links? **Default Entity Name:** BBM.&PRODUCT.&CONTEXT.&INTTABLE.OD **Entity Name after Substitution:** BBM.MVIP.*targetid*.SP890.OD
Packet Trace Parms - Table Data	Can the user see Packet Trace Parameters? **Default Entity Name:** BBM.&PRODUCT.&CONTEXT.&INTTABLE.OD **Entity Name after Substitution:** BBM.MVIP.*targetid*.SP920.OD
Socket Trace Parms - Table Data	Can the user see Socket Trace Parameters? **Default Entity Name:** BBM.&PRODUCT.&CONTEXT.&INTTABLE.OD **Entity Name after Substitution:** BBM.MVIP.*targetid*.SP930.OD

Table 24. Resource Definitions for MAINVIEW for IP (Continued)

Resource name in SERDEF view	Resource definition and considerations
Packet Trace Display - Table Data	Can the user see Packet Trace information? **Default Entity Name:** BBM.&PRODUCT.&CONTEXT.&INTTABLE.OD **Entity Name after Substitution:** BBM.MVIP.*targetid*.SP940.OD
Socket Trace Display - Table Data	Can the user see Socket Trace information? **Default Entity Name:** BBM.&PRODUCT.&CONTEXT.&INTTABLE.OD **Entity Name after Substitution:** BBM.MVIP.*targetid*.SP950.OD
Packet Trace Filter - Table Data	Can the user see Packet Trace Filters? **Default Entity Name:** BBM.&PRODUCT.&CONTEXT.&INTTABLE.OD **Entity Name after Substitution:** BBM.MVIP.*targetid*.SP960.OD
Socket Trace Filter - Table Data	Can the user see Socket Trace Filters? **Default Entity Name:** BBM.&PRODUCT.&CONTEXT.&INTTABLE.OD **Entity Name after Substitution:** BBM.MVIP.*targetid*.SP970.OD
OSA Devices - Table Data	Can the user see OSA Device information? **Default Entity Name:** BBM.&PRODUCT.&CONTEXT.&INTTABLE.OD **Entity Name after Substitution:** BBM.MVIP.*targetid*.SP980.OD
SNMP Nodes - Table Data	Can the user see SMNP Nodes information? **Default Entity Name:** BBM.&PRODUCT.&CONTEXT.&INTTABLE.OD **Entity Name after Substitution:** BBM.MVIP.*targetid*.SP990.OD

MAINVIEW for Linux – Servers Resources

To disable, enable, or customize resource access authorization requests to the ESM for a MAINVIEW for Linux – Servers resource:

1. Display the SERDEFL view in MAINVIEW for Linux – Servers, as described in "Displaying a List of Members using the SERDEFL View" on page 186.
2. Select the member you want to change that has a **Product** field value of `MVLNX`.

A total of five unique entity names control all MAINVIEW for Linux – Servers resources. To enable or disable all security for MAINVIEW for Linux – Servers, you need only disable or enable all of the following high-level resources:

- Default - Table Data
- Default - Any Table Actions
- Default - Alter Data Set
- Default - Specific Table Actions
- Any Action (MAINVIEW for Linux – Servers Views)

The following table lists all the resources that are protected by MAINVIEW for Linux – Servers. The **Default Entity Name** is the entity name shared by a set of similar resources and is used for high-level control of the entire set. The **Entity Name after Substitution** is the entity name with any substituted symbolic values for a particular resource.

The class name for all resources, unless otherwise indicated, is `$BBM`, which is usually, and by default, transformed to external resource class `FACILITY`.

Table 25. Resource Definitions for MAINVIEW for Linux – Servers

Resource name in SERDEF view	Resource definition and considerations
Default - Table Data	Can the user access a MAINVIEW for Linux – Servers view? This default resource controls a subset of similar resources. Enabling, disabling, or changing this resource automatically enables, disables, or changes all resources with the following entity name. **Default Entity Name:** BBM.&PRODUCT.&CONTEXT.&INTTABLE.OD **Entity Name after Substitution:**BBM.MVLNX.*targetid*.@DFLT.OD
Default - Any Table Actions	Can the user enter any actions against data in a view? This default resource controls a subset of similar resources. Enabling, disabling, or changing this resource automatically enables, disables, or changes all resources with the following default entity name: **Default Entity Name:** BBM.&PRODUCT.&CONTEXT.&INTTABLE.AO **Entity Name after Substitution:** BBM.MVLNX.*targetid*.@DFLT.AO

Table 25. Resource Definitions for MAINVIEW for Linux – Servers (Continued)

Resource name in SERDEF view	Resource definition and considerations
Default - Specific Table Actions	Can the user enter a specific action against data in a view? This default resource controls a subset of similar resources. Enabling, disabling, or changing this resource automatically enables, disables, or changes all resources with the following default entity name: **Default Entity Name:** BBM.&PRODUCT.&CONTEXT.&INTTABLE.&INTACTION.OA **Entity Name after Substitution:** BBM.MVLNX.*targetid*.#DEFAULT.ACTION.OA
Default - Alter Data Set	Can the user alter a data set? The data set is usually a BBPARM or BBSECURE data set. This default resource controls a subset of similar resources. Enabling, disabling, or changing this resource automatically enables, disables, or changes all resources with the following default entity name: **Default Entity Name:** &DSN **Entity Name after Substitution:** @DFLT
Any Action (MVLNX Views)	Can the user enter any action from MAINVIEW for Linux – Servers views? **Default Entity Name:** BBM.&PRODUCT.&CONTEXT.AA **Entity Name after Substitution:** BBM.MVLNX.*targetid*.AA
Config Sys Parms: General Kernel - Table Data	**Default Entity Name:** BBM.&PRODUCT.&CONTEXT.&INTTABLE.OD **Entity Name after Substitution:** BBM.MVLNX.*targetid*.LC100.OD
Config Sys Parms: File System - Table Data	**Default Entity Name:** BBM.&PRODUCT.&CONTEXT.&INTTABLE.OD **Entity Name after Substitution:** BBM.MVLNX.*targetid*.LC200.OD
Config Sys Parms: Virtual Memory - Table Data	**Default Entity Name:** BBM.&PRODUCT.&CONTEXT.&INTTABLE.OD **Entity Name after Substitution:** BBM.MVLNX.*targetid*.LC300.OD
Config Sys Parms: Network Core - Table Data	**Default Entity Name:** BBM.&PRODUCT.&CONTEXT.&INTTABLE.OD **Entity Name after Substitution:** BBM.MVLNX.*targetid*.LC400.OD
Config Sys Parms: Network IPV4 - Table Data	**Default Entity Name:** BBM.&PRODUCT.&CONTEXT.&INTTABLE.OD **Entity Name after Substitution:** BBM.MVLNX.*targetid*.LC500.OD
Config Sys Parms: Network IPV4 Intfcs - Table Data	**Default Entity Name:** BBM.&PRODUCT.&CONTEXT.&INTTABLE.OD **Entity Name after Substitution:** BBM.MVLNX.*targetid*.LC600.OD
Config: System Information - Table Data	**Default Entity Name:** BBM.&PRODUCT.&CONTEXT.&INTTABLE.OD **Entity Name after Substitution:** BBM.MVLNX.*targetid*.LC700.OD

Table 25. Resource Definitions for MAINVIEW for Linux – Servers (Continued)

Resource name in SERDEF view	Resource definition and considerations
Config: Collector Information - Table Data	**Default Entity Name:** BBM.&PRODUCT.&CONTEXT.&INTTABLE.OD **Entity Name after Substitution:** BBM.MVLNX.*targetid*.LC800.OD
Config: Network Interfaces General - Table Data	**Default Entity Name:** BBM.&PRODUCT.&CONTEXT.&INTTABLE.OD **Entity Name after Substitution:** BBM.MVLNX.*targetid*.LC900.OD
Config: Disk Device - Table Data	**Default Entity Name:** BBM.&PRODUCT.&CONTEXT.&INTTABLE.OD **Entity Name after Substitution:** BBM.MVLNX.*targetid*.LCA00.OD
Config: Disk Controller - Table Data	**Default Entity Name:** BBM.&PRODUCT.&CONTEXT.&INTTABLE.OD **Entity Name after Substitution:** BBM.MVLNX.*targetid*.LCB00.OD
Config: Disk Partition - Table Data	**Default Entity Name:** BBM.&PRODUCT.&CONTEXT.&INTTABLE.OD **Entity Name after Substitution:** BBM.MVLNX.*targetid*.LCC00.OD
Config: PAS Information - Table Data	**Default Entity Name:** BBM.&PRODUCT.&CONTEXT.&INTTABLE.OD **Entity Name after Substitution:** BBM.MVLNX.*targetid*.LCD00.OD
Device Statistics - Table Data	**Default Entity Name:** BBM.&PRODUCT.&CONTEXT.&INTTABLE.OD **Entity Name after Substitution:** BBM.MVLNX.*targetid*.LD200.OD
Mount Point - Table Data	**Default Entity Name:** BBM.&PRODUCT.&CONTEXT.&INTTABLE.OD **Entity Name after Substitution:** BBM.MVLNX.*targetid*.LF300.OD
File Space Used - Table Data	**Default Entity Name:** BBM.&PRODUCT.&CONTEXT.&INTTABLE.OD **Entity Name after Substitution:** BBM.MVLNX.*targetid*.LF400.OD
File Space Used - Any Action	**Default Entity Name:** BBM.&PRODUCT.&CONTEXT.&INTTABLE.AO **Entity Name after Substitution:** BBM.MVLNX.*targetid*.LF400.AO
File Space Used - Action - Select	**Default Entity Name:** BBM.&PRODUCT.&CONTEXT.&INTTABLE.&INTACTION.OA **Entity Name after Substitution:** BBM.MVLNX.*targetid*.LF400.SELECT.OA
Mounted File Systems - Table Data	**Default Entity Name:** BBM.&PRODUCT.&CONTEXT.&INTTABLE.OD **Entity Name after Substitution:** BBM.MVLNX.*targetid*.LF900.OD
Mounted File Systems - Any Action	**Default Entity Name:** BBM.&PRODUCT.&CONTEXT.&INTTABLE.AO **Entity Name after Substitution:** BBM.MVLNX.*targetid*.LF900.AO
Mounted File Systems - Action - Select	**Default Entity Name:** BBM.&PRODUCT.&CONTEXT.&INTTABLE.&INTACTION.OA **Entity Name after Substitution:** BBM.MVLNX.*targetid*.LF900.SELECT.OA
Full Host Name - Table Data	**Default Entity Name:** BBM.&PRODUCT.&CONTEXT.&INTTABLE.OD **Entity Name after Substitution:** BBM.MVLNX.*targetid*.LI100.OD

Table 25. Resource Definitions for MAINVIEW for Linux – Servers (Continued)

Resource name in SERDEF view	Resource definition and considerations
Monitor Rule - Table Data	**Default Entity Name:** BBM.&PRODUCT.&CONTEXT.&INTTABLE.OD **Entity Name after Substitution:** BBM.MVLNX.*targetid*.LI200.OD
Monitor Rule - Any Action	**Default Entity Name:** BBM.&PRODUCT.&CONTEXT.&INTTABLE.AO **Entity Name after Substitution:** BBM.MVLNX.*targetid*.LI200.AO
Monitor Rule - Action - Edit	**Default Entity Name:** BBM.&PRODUCT.&CONTEXT.&INTTABLE.&INTACTION.OA **Entity Name after Substitution:** BBM.MVLNX.*targetid*.LI300.EDIT.AO
Monitor Rule - Alter Data Set	**Default Entity Name:** &DSN **Entity Name after Substitution:**
Monitor Rule - Action - Change Monitor Flag	**Default Entity Name:** BBM.&PRODUCT.&CONTEXT.&INTTABLE.&INTACTION.OA **Entity Name after Substitution:** BBM.MVLNX.*targetid*.LI200.IRREMONF.OA
Monitor Rule - Action - Change Heartbeat Interval	**Default Entity Name:** BBM.&PRODUCT.&CONTEXT.&INTTABLE.&INTACTION.OA **Entity Name after Substitution:** BBM.MVLNX.*targetid*.LI200.IRREHBIN.OA
Monitor Rule - Action - Change Reply Timeout	**Default Entity Name:** BBM.&PRODUCT.&CONTEXT.&INTTABLE.&INTACTION.OA **Entity Name after Substitution:** BBM.MVLNX.*targetid*.LI200.IRRETMO.OA
Monitor Rule - Action - Change Background Samp Int	**Default Entity Name:** BBM.&PRODUCT.&CONTEXT.&INTTABLE.&INTACTION.OA **Entity Name after Substitution:** BBM.MVLNX.*targetid*.LI200.IRREBMSI.OA
Monitor Rule - Action - Change Demand Samp Interval	**Default Entity Name:** BBM.&PRODUCT.&CONTEXT.&INTTABLE.&INTACTION.OA **Entity Name after Substitution:** BBM.MVLNX.*targetid*.LI200.IRREDMSI.OA
Monitor Rule - Action - Change Min Demand Mode Dur	**Default Entity Name:** BBM.&PRODUCT.&CONTEXT.&INTTABLE.&INTACTION.OA **Entity Name after Substitution:** BBM.MVLNX.*targetid*.LI200.IRREMDMD.OA
Image Status - Table Data	**Default Entity Name:** BBM.&PRODUCT.&CONTEXT.&INTTABLE.OD **Entity Name after Substitution:** BBM.MVLNX.*targetid*.LI300.OD
CPU Statistics - Table Data	**Default Entity Name:** BBM.&PRODUCT.&CONTEXT.&INTTABLE.OD **Entity Name after Substitution:** BBM.MVLNX.*targetid*.LK200.OD
Shared Memory Information - Table Data	**Default Entity Name:** BBM.&PRODUCT.&CONTEXT.&INTTABLE.OD **Entity Name after Substitution:** BBM.MVLNX.*targetid*.LK300.OD
Shared Memory Statistics - Table Data	**Default Entity Name:** BBM.&PRODUCT.&CONTEXT.&INTTABLE.OD **Entity Name after Substitution:** BBM.MVLNX.*targetid*.LK400.OD

Table 25. Resource Definitions for MAINVIEW for Linux – Servers (Continued)

Resource name in SERDEF view	Resource definition and considerations
Message Queue Information - Table Data	**Default Entity Name:** BBM.&PRODUCT.&CONTEXT.&INTTABLE.OD **Entity Name after Substitution:** BBM.MVLNX.*targetid*.LK500.OD
Message Queue Statistics - Table Data	**Default Entity Name:** BBM.&PRODUCT.&CONTEXT.&INTTABLE.OD **Entity Name after Substitution:** BBM.MVLNX.*targetid*.LK600.OD
Semaphore Information - Table Data	**Default Entity Name:** BBM.&PRODUCT.&CONTEXT.&INTTABLE.OD **Entity Name after Substitution:** BBM.MVLNX.*targetid*.LK700.OD
Semaphore Statistics - Table Data	**Default Entity Name:** BBM.&PRODUCT.&CONTEXT.&INTTABLE.OD **Entity Name after Substitution:** BBM.MVLNX.*targetid*.LK800.OD
System Resource Usage - Table Data	**Default Entity Name:** BBM.&PRODUCT.&CONTEXT.&INTTABLE.OD **Entity Name after Substitution:** BBM.MVLNX.*targetid*.LK900.OD
Network Statistics - Table Data	**Default Entity Name:** BBM.&PRODUCT.&CONTEXT.&INTTABLE.OD **Entity Name after Substitution:** BBM.MVLNX.*targetid*.LN100.OD
Process/Full Path - Table Data	**Default Entity Name:** BBM.&PRODUCT.&CONTEXT.&INTTABLE.OD **Entity Name after Substitution:** BBM.MVLNX.*targetid*.LP200.OD
Process/Full Command - Table Data	**Default Entity Name:** BBM.&PRODUCT.&CONTEXT.&INTTABLE.OD **Entity Name after Substitution:** BBM.MVLNX.*targetid*.LP300.OD
Process Tree - Table Data	**Default Entity Name:** BBM.&PRODUCT.&CONTEXT.&INTTABLE.OD **Entity Name after Substitution:** BBM.MVLNX.*targetid*.LP600.OD
Process Statistics - Table Data	**Default Entity Name:** BBM.&PRODUCT.&CONTEXT.&INTTABLE.OD **Entity Name after Substitution:** BBM.MVLNX.*targetid*.LP900.OD
Process Statistics - Any Action	**Default Entity Name:** BBM.&PRODUCT.&CONTEXT.&INTTABLE.AO **Entity Name after Substitution:** BBM.MVLNX.*targetid*.LP900.AO
Process Statistics - Action - Kill	**Default Entity Name:** BBM.&PRODUCT.&CONTEXT.&INTTABLE.&INTACTION.OA **Entity Name after Substitution:** BBM.MVLNX.*targetid*.LP900.KILL.OA
Process Statistics - Action - K9	**Default Entity Name:** BBM.&PRODUCT.&CONTEXT.&INTTABLE.&INTACTION.OA **Entity Name after Substitution:** BBM.MVLNX.*targetid*.LP900.K9.OA
User Id Information - Table Data	**Default Entity Name:** BBM.&PRODUCT.&CONTEXT.&INTTABLE.OD **Entity Name after Substitution:** BBM.MVLNX.*targetid*.LU100.OD
Login Statistics - Table Data	**Default Entity Name:** BBM.&PRODUCT.&CONTEXT.&INTTABLE.OD **Entity Name after Substitution:** BBM.MVLNX.*targetid*.LU200.OD

MAINVIEW for UNIX System Services Resources

To disable, enable, or customize resource access authorization requests to the ESM for a MAINVIEW for UNIX System Services resource:

1. Display the SERDEFL view in MAINVIEW for UNIX System Services, as described in "Displaying a List of Members using the SERDEFL View" on page 186.
2. Select the member you want to change that has a **Product** field value of `MVUSS`.

A total of five unique entity names control all MAINVIEW for UNIX System Services resources. To enable or disable all security for MAINVIEW for UNIX System Services, you need only disable or enable all of the following high-level resources:

- Default - Table Data
- Default - Any Table Actions
- Default - Primary Actions (All Views)
- Default - Specific Table Actions
- Default - Access OEDG Requests
- Any Action

The following table lists all the resources that are protected by MAINVIEW for UNIX System Services. The **Default Entity Name** is the entity name shared by a set of similar resources and is used for high-level control of the entire set. The **Entity Name after Substitution** is the entity name with any substituted symbolic values for a particular resource.

The class name for all resources, unless otherwise indicated, is `$BBM`, which is usually, and by default, transformed to external resource class `FACILITY`.

Table 26. Resource Definitions for MAINVIEW for UNIX System Services

Resource name in SERDEF view	Resource definition and considerations
Default - Table Data	Can the user access a view in MAINVIEW for UNIX System Services? This default resource controls a subset of similar individual resources. Enabling, disabling, or changing this resource automatically enables, disables, or changes all resources with the following entity name. **Default Entity Name:** BBM.&PRODUCT.&CONTEXT.&INTTABLE.OD **Entity Name after Substitution:** BBM.MVUSS.*targetid*.*tableid*.OD Specific resources with this same default entity name can be enabled, disabled, or changed on an individual basis.
Default - Any Table Actions	Can the user enter any action for a MAINVIEW for UNIX System Services view? This default resource controls a subset of similar individual resources. Enabling, disabling, or changing this resource automatically enables, disables, or changes all resources with the following entity name. **Default Entity Name:** BBM.&PRODUCT.&CONTEXT.&INTTABLE.AO **Entity Name after Substitution:** BBM.MVUSS.*targetid*.*tableid*.AO Specific resources with this same default entity name can be enabled, disabled, or changed on an individual basis.
Default - Access All OEDG Requests	Can the user access any OEDG requests? This default resource controls a subset of similar individual resources. Enabling, disabling, or changing this resource automatically enables, disables, or changes all resources with the following enitity name. **Default Entity Name:** BBM.&PRODUCT.&CONTEXT.OEDGREQS **Entity name after Substitution:** BBM.MVUSS.*targetid*.OEDGREQS Specific resources with the same default entity name can be enabled, disabled, or changed on an individual basis.
Default - Primary Actions (All Views)	Can the user perform any primary actions (all MAINVIEW for UNIX System Services views)? This default resource controls a subset of similar individual resources. Enabling, disabling, or changing this resource automatically enables, disables, or changes all resources with the following entity name. **Default Entity Name:** BBM.&PRODUCT.&CONTEXT.&INTACTION.PA **Entity Name after Substitution:** BBM.MVUSS.*targetid*.*actionid*.PA Specific resources with this same default entity name can be enabled, disabled, or changed on an individual basis.

Table 26. Resource Definitions for MAINVIEW for UNIX System Services (Continued)

Resource name in SERDEF view	Resource definition and considerations
Default - Specific Table Action	Can the user enter specific actions for a MAINVIEW for UNIX System Services view? This default resource controls a subset of similar resources. Enabling, disabling, or changing this resource automatically enables, disables, or changes all resources with the following entity name. **Default Entity Name:** BBM.&PRODUCT.&CONTEXT.&INTTABLE.&INTACTION.OA **Entity Name after Substitution:** BBM.MVUSS.*targetid.tableid.actionid.*OA Specific resources belonging to this subset can be enabled, disabled, or changed on an individual basis.
Any Action (MVUSS Views)	Can the user enter any view action? **Default Entity Name:** BBM.&PRODUCT.&CONTEXT.AA **Entity Name after Substitution:** BBM.MVUSS.*targetid*.AA
Allow - Action - A command Rqre	Can the user enter the A line command on the REQSTAT view? **Default Entity Name:** BBM.&PRODUCT.&CONTEXT.&INTTABLE.&INTACTION.OA **Entity name after Substitution:** BBM.MVUSS.*targetid*.UCEC9.ALLOW.OA
Primary Action - Get Mount Information	Can the user enter the Mount command for a UNIX System Services file system? **Default Entity Name:** BBM.&PRODUCT.&CONTEXT.&INTACTION.PA **Entity name after Substitution:** BBM.MVUSS.*targetid*.ASKMOUNT.PA
Primary Action - Issue Unmount	Can the user enter the Unmount command for a UNIX System Services file system? **Default Entity Name:** BBM.&PRODUCT.&CONTEXT.&INTACTION.PA **Entity name after Substitution:** BBM.MVUSS.*targetid*.BBUNMT.PA
BPXL - Action - C command Pmre	Can the user enter the C line command on System Parameter views? **Default Entity Name:** BBM.&PRODUCT.&CONTEXT.&INTTABLE.&INTACTION.OA **Entity name after Substitution:** BBM.MVUSS.*targetid*.UCEC4.BPXL.OA
Data Collect Stat - Table Data	Can the user access data for the DCSTAT view? **Default Entity Name:** BBM.&PRODUCT.&CONTEXT.&INTTABLE.OD **Entity Name after Substitution:** BBM.MVUSS.*targetid*.UC427.OD
Data Collect Stat - Any Action	Can the user enter a DCSTAT view action? **Default Entity Name:** BBM.&PRODUCT.&CONTEXT.&INTTABLE.AO **Entity Name after Substitution:** BBM.MVUSS.*targetid*.UC427.AO
Data Collect Stat - Action - Deact	Can the user enter the D line command in the DCSTAT view? **Default Entity Name:** BBM.&PRODUCT.&CONTEXT.&INTTABLE.&INTACTION.OA **Entity Name after Substitution:** BBM.MVUSS.*targetid*.UC427.DEACT.OA

Table 26. Resource Definitions for MAINVIEW for UNIX System Services (Continued)

Resource name in SERDEF view	Resource definition and considerations
Data Collect Stat - Action - Activate	Can the user enter the A command in the DCSTAT view? **Default Entity Name:** BBM.&PRODUCT.&CONTEXT.&INTTABLE.&INTACTION.OA **Entity Name after Substitution:** BBM.MVUSS.*targetid*.UC427.ACTIVATE.OA
DISPPR - Action - R command Prre	Can the user enter the R line command on the process views? **Default Entity Name:** BBM.&PRODUCT.&CONTEXT.&INTTABLE.&INTACTION.OA **Entity name after Substitution:** BBM.MVUSS.*targetid*.UCEC0.DISPPR.OA
DUMPPR - Action - D command Prre	Can the user enter the D line command on the process views? **Default Entity Name:** BBM.&PRODUCT.&CONTEXT.&INTTABLE.&INTACTION.OA **Entity name after Substitution:** BBM.MVUSS.*targetid*.UCEC0.DUMPPR.OA
Filesopn - Action - F command Prre	Can the user enter the F line command on the process views? **Default Entity Name:** BBM.&PRODUCT.&CONTEXT.&INTTABLE.&INTACTION.OA **Entity name after Substitution:** BBM.MVUSS.*targetid*.UCEC0.FILESOPN.OA
Filesys/mountparm - Table Data	Can the user access the file system mountparm table data? **Default Entity Name:** BBM.&PRODUCT.&CONTEXT.&INTTABLE.OD **Entity Name after Substitution:** BBM.MVUSS.*targetid*.UCED1.OD
Filesys/mountpoint - Table Data	Can the user access the file system mountpoint table data? **Default Entity Name:** BBM.&PRODUCT.&CONTEXT.&INTTABLE.OD **Entity Name after Substitution:** BBM.MVUSS.*targetid*.UCED0.OD
Filesystems Mounted - Table Data	Can the user access the mounted file system table data? **Default Entity Name:** BBM.&PRODUCT.&CONTEXT.&INTTABLE.OD **Entity Name after Substitution:** BBM.MVUSS.*targetid*.UCEC2.OD
File Space Usage - Table Data	Can the user access any table data for file space usage? **Default Entity Name:** BBM.&PRODUCT.&CONTEXT.&INTTABLE.OD **Entity Name after Substitution:** BBM.MVUSS.*targetid*.UCEC3.OD
Fmre Collect Stat - Any Action	Can the user perform any action on mounted file system views? **Default Entity Name:** BBM.&PRODUCT.&CONTEXT.&INTTABLE.AO **Entity Name after Substitution:** BBM.MVUSS.*targetid*.UCEC2.AO
Fsre Collect Stat - Any Action	Can the user perform any action on file space usage views? **Default Entity Name:** BBM.&PRODUCT.&CONTEXT.&INTTABLE.AO **Entity Name after Substitution:** BBM.MVUSS.*targetid*.UCEC3.AO

Table 26. Resource Definitions for MAINVIEW for UNIX System Services (Continued)

Resource name in SERDEF view	Resource definition and considerations
Primary Action - Get Global Limits	Can the user enter the GETBUFL command to get UNIX System Services global limits? **Default Entity Name:** BBM.&PRODUCT.&CONTEXT.&INTACTION.PA **Entity name after Substitution:** BBM.MVUSS.*targetid*.GETBUFL.PA
Primary Action - Get File Size	Can the user change the size of a UNIX System Services file system? **Default Entity Name:** BBM.&PRODUCT.&CONTEXT.&INTACTION.PA **Entity name after Substitution:** BBM.MVUSS.*targetid*.GETFILS.PA
Hfre Collect Stat - Any Action	Can the user perform any action on HFS file system views? **Default Entity Name:** BBM.&PRODUCT.&CONTEXT.&INTTABLE.AO **Entity Name after Substitution:** BBM.MVUSS.*targetid*.UCED3.AO
Hold - Action - H command Rqre	Can the user enter the H line command on the REQSTAT view? **Default Entity Name:** BBM.&PRODUCT.&CONTEXT.&INTTABLE.&INTACTION.OA **Entity name after Substitution:** BBM.MVUSS.*targetid*.UCEC9.HOLD.OA
HFS Global Buffers - Table Data	Can the user access the HFS global buffer table data? **Default Entity Name:** BBM.&PRODUCT.&CONTEXT.&INTTABLE.OD **Entity Name after Substitution:** BBM.MVUSS.*targetid*.UCED4.OD
HFS Filesystem - Table Data	Can the user access the HFS file system table data? **Default Entity Name:** BBM.&PRODUCT.&CONTEXT.&INTTABLE.OD **Entity Name after Substitution:** BBM.MVUSS.*targetid*.UCED3.OD
HFS Global - Table Data	Can the user access the HFS global table data? **Default Entity Name:** BBM.&PRODUCT.&CONTEXT.&INTTABLE.OD **Entity Name after Substitution:** BBM.MVUSS.*targetid*.UCED2.OD
Kill - Action - K command Prre	Can the user enter enter the K line command on the process views? **Default Entity Name:** BBM.&PRODUCT.&CONTEXT.&INTTABLE.&INTACTION.OA **Entity name after Substitution:** BBM.MVUSS.*targetid*.UCEC0.KILL.OA
Select - Action - M command Hfre	Can the user enter enter the M line command on HFS file system views? **Default Entity Name:** BBM.&PRODUCT.&CONTEXT.&INTTABLE.&INTACTION.OA **Entity name after Substitution:** BBM.MVUSS.*targetid*.UCED3.MOUNT.OA
Mount - Action - M command Fmre	Can the user enter enter the M line command on mounted file system views? **Default Entity Name:** BBM.&PRODUCT.&CONTEXT.&INTTABLE.&INTACTION.OA **Entity name after Substitution:** BBM.MVUSS.*targetid*.UCEC2.MOUNT.OA

Table 26. Resource Definitions for MAINVIEW for UNIX System Services (Continued)

Resource name in SERDEF view	Resource definition and considerations
Primary Action - OPERBE	Can the user perform an action that uses the internal console command? **Note:** The internal console command is used by the R and D line commands on the process views. **Default Entity Name:** BBM.&PRODUCT.&CONTEXT.&INTACTION.PA **Entity name after Substitution:** BBM.MVUSS.*targetid*.OPERBE.PA
Pfre Collect Stat - Any Action	Can the user perform any action on process files open views? **Default Entity Name:** BBM.&PRODUCT.&CONTEXT.&INTTABLE.AO **Entity Name after Substitution:** BBM.MVUSS.*targetid*.UCECB.AO
Pmre Collect Stat - Any Action	Can the user perform any action on the system parameter views? **Default Entity Name:** BBM.&PRODUCT.&CONTEXT.&INTTABLE.AO **Entity Name after Substitution:** BBM.MVUSS.*targetid*.UCEC4.AO
Process - Table Data	Can the user access table data for process views? **Default Entity Name:** BBM.&PRODUCT.&CONTEXT.&INTTABLE.OD **Entity Name after Substitution:** BBM.MVUSS.*targetid*.UCEC0.OD
Process/command - Table Data	Can the user access the process/command table data? **Default Entity Name:** BBM.&PRODUCT.&CONTEXT.&INTTABLE.OD **Entity Name after Substitution:** BBM.MVUSS.*targetid*.UCECE.OD
Process/cwd - Table Data	Can the user access the process/cwd table data? **Default Entity Name:** BBM.&PRODUCT.&CONTEXT.&INTTABLE.OD **Entity Name after Substitution:** BBM.MVUSS.*targetid*.UCECF.OD
Process/path - Table Data	Can the user access the process/path table data? **Default Entity Name:** BBM.&PRODUCT.&CONTEXT.&INTTABLE.OD **Entity Name after Substitution:** BBM.MVUSS.*targetid*.UCECD.OD
Process/tty - Table Data	Can the user access the process/tty table data? **Default Entity Name:** BBM.&PRODUCT.&CONTEXT.&INTTABLE.OD **Entity Name after Substitution:** BBM.MVUSS.*targetid*.UCECC .OD
Process Files Open - Table Data	Can the user access the process files open table data? **Default Entity Name:** BBM.&PRODUCT.&CONTEXT.&INTTABLE.OD **Entity Name after Substitution:** BBM.MVUSS.*targetid*.UCECB.OD
Process Tree - Table Data	Can the user access the process tree table data? **Default Entity Name:** BBM.&PRODUCT.&CONTEXT.&INTTABLE.OD **Entity Name after Substitution:** BBM.MVUSS.*targetid*.UCECA .OD

Table 26. Resource Definitions for MAINVIEW for UNIX System Services (Continued)

Resource name in SERDEF view	Resource definition and considerations
Prre Collect Stat - Any Action	Can the user perform any action on process views? **Default Entity Name:** BBM.&PRODUCT.&CONTEXT.&INTTABLE.AO **Entity Name after Substitution:** BBM.MVUSS.*targetid*.UCEC0.AO
Purge - Action - P command Rqre	Can the user enter enter the P line command on the REQSTAT view? **Default Entity Name:** BBM.&PRODUCT.&CONTEXT.&INTTABLE.&INTACTION.OA **Entity name after Substitution:** BBM.MVUSS.targetid.UCEC9.PURGE.OA
PRCLMT - Action - L command Prre	Can the user enter enter the L line command on the process views? **Default Entity Name:** BBM.&PRODUCT.&CONTEXT.&INTTABLE.&INTACTION.OA **Entity name after Substitution:** BBM.MVUSS.targetid.UCEC0.PRCLMT.OA
Required HFS Files - Table Data	Can the user access the required HFS files table data? **Default Entity Name:** BBM.&PRODUCT.&CONTEXT.&INTTABLE.OD **Entity Name after Substitution:** BBM.MVUSS.*targetid*.UCED6 .OD
Required Processes - Table Data	Can the user access the required processes table data? **Default Entity Name:** BBM.&PRODUCT.&CONTEXT.&INTTABLE.OD **Entity Name after Substitution:** BBM.MVUSS.*targetid*.UCED5 .OD
Request Status - Table Data	Can the user access the request status table data? **Default Entity Name:** BBM.&PRODUCT.&CONTEXT.&INTTABLE.OD **Entity Name after Substitution:** BBM.MVUSS.*targetid*.UCEC9.OD
Rqre Collect Stat - Any Action	Can the user perform any action on the REQSTAT view? **Default Entity Name:** BBM.&PRODUCT.&CONTEXT.&INTTABLE.AO **Entity Name after Substitution:** BBM.MVUSS.*targetid*.UCEC9.AO
Select - Action - S command Pfre	Can the user enter enter the S line command on the process files open views? **Default Entity Name:** BBM.&PRODUCT.&CONTEXT.&INTTABLE.&INTACTION.OA **Entity name after Substitution:** BBM.MVUSS.*targetid*.UCECB.SELECT.OA
Select - Action - S command Fmre	Can the user enter enter the S line command on mounted file system views? **Default Entity Name:** BBM.&PRODUCT.&CONTEXT.&INTTABLE.&INTACTION.OA **Entity Name after Substitution:** BBM.MVUSS.*targetid*.UCEC2.SELECT.OA
Select - Action - S command Fsre	Can the user enter enter the S line command on file space usage views? **Default Entity Name:** BBM.&PRODUCT.&CONTEXT.&INTTABLE.&INTACTION.OA **Entity Name after Substitution:** BBM.MVUSS.*targetid*.UCEC3.SELECT .OA

Table 26. Resource Definitions for MAINVIEW for UNIX System Services (Continued)

Resource name in SERDEF view	Resource definition and considerations
Select - Action - S command Rqre	Can the user enter enter the S line command on the REQSTAT view? **Default Entity Name:** BBM.&PRODUCT.&CONTEXT.&INTTABLE.&INTACTION.OA **Entity name after Substitution:** BBM.MVUSS.*targetid*.UCEC9.SELECT.OA
Select - Action - S command Hfre	Can the user enter enter the S line command on HFS file system views? **Default Entity Name:** BBM.&PRODUCT.&CONTEXT.&INTTABLE.&INTACTION.OA **Entity name after Substitution:** BBM.MVUSS.*targetid*.UCED3.SELECT.OA
System Parameters - Table Data	Can the user access table data for system parameters views? **Default Entity Name:** BBM.&PRODUCT.&CONTEXT.&INTTABLE.OD **Entity Name after Substitution:** BBM.MVUSS.*targetid*.UCEC4 .OD
Primary Action - OPSHELL	Can the user perform an action that uses the internal shell command? **Note:** The internal shell command is not currently used by any view. **Default Entity Name:** BBM.&PRODUCT.&CONTEXT.&INTACTION.PA **Entity name after Substitution:** BBM.MVUSS.*targetid*.OPSHELL.PA
Thread - Table Data	Can the user access table data for thread views? **Default Entity Name:** BBM.&PRODUCT.&CONTEXT.&INTTABLE.OD **Entity Name after Substitution:** BBM.MVUSS.*targetid*.UCEC1 .OD
Unmount - Action - U command Hfre	Can the user enter enter the U line command on HFS file system views? **Default Entity Name:** BBM.&PRODUCT.&CONTEXT.&INTTABLE.&INTACTION.OA **Entity name after Substitution:** BBM.MVUSS.*targetid*.UCED3.UNMOUNT.OA
Unmount - Action - U command Fmre	Can the user enter enter the U line command on mounted file system views? **Default Entity Name:** BBM.&PRODUCT.&CONTEXT.&INTTABLE.&INTACTION.OA **Entity name after Substitution:** BBM.MVUSS.*targetid*.UCEC2.UNMOUNT.OA
WLM Address Space - Table Data	Can the user access table data for WLM address space views? **Default Entity Name:** BBM.&PRODUCT.&CONTEXT.&INTTABLE.OD **Entity Name after Substitution:** BBM.MVUSS.*targetid*.UCE48.OD

MAINVIEW for VTAM Resources

To disable, enable, or customize resource access authorization requests to the ESM for a MAINVIEW for VTAM resource:

1. Display the SERDEFL view in MAINVIEW for VTAM, as described in "Displaying a List of Members using the SERDEFL View" on page 186.
2. Select the member you want to change that has a **Product** field value of `MVVTAM`.

A single entity name controls all MAINVIEW for VTAM resources. To enable or disable all security for MAINVIEW for VTAM, you need only disable or enable the following high-level resource:

- Default - Table Data

The following table lists all the resources that are protected by MAINVIEW for VTAM. The **Default Entity Name** is the entity name shared by a set of similar resources and is used for high-level control of the entire set. The **Entity Name after Substitution** is the entity name with any substituted symbolic values for a particular resource.

The class name for all resources, unless otherwise indicated, is `$BBM`, which is usually, and by default, transformed to external resource class `FACILITY`.

Table 27. Resource Definitions for MAINVIEW for VTAM

Resource name in SERDEF view	Resource definition and considerations
Default - Table Data	Can the user access a MAINVIEW for VTAM view? **Default Entity Name:** BBM.&PRODUCT.&CONTEXT.&INTTABLE.OD **Entity Name after Substitution:** BBM.MVVTAM.*targetid*.*tableid*.OD
Applications - Table Data	Can the user see VTAM Applications? **Default Entity Name:** BBM.&PRODUCT.&CONTEXT.&INTTABLE.OD **Entity Name after Substitution:** BBM.MVVTAM.*targetid*.SP100.OD
LUs - Table Data	Can the user see LUs ? **Default Entity Name:** BBM.&PRODUCT.&CONTEXT.&INTTABLE.OD **Entity Name after Substitution:** BBM.MVVTAM.*targetid*.SP200.OD
Transactions - Table Data	Can the user see Transactions? **Default Entity Name:** BBM.&PRODUCT.&CONTEXT.&INTTABLE.OD **Entity Name after Substitution:** BBM.MVVTAM.*targetid*.SP300.OD
Application Resources - Table Data	Can the user see Application Resources? **Default Entity Name:** BBM.&PRODUCT.&CONTEXT.&INTTABLE.OD **Entity Name after Substitution:** BBM.MVVTAM.*targetid*.SP400.OD

Table 27. Resource Definitions for MAINVIEW for VTAM (Continued)

Resource name in SERDEF view	Resource definition and considerations
LU Resources - Table Data	Can the user see LU Resources? **Default Entity Name:** BBM.&PRODUCT.&CONTEXT.&INTTABLE.OD **Entity Name after Substitution:** BBM.MVVTAM.*targetid*.SP500.OD
Transaction Resources - Table Data	Can the user see Transaction Resources? **Default Entity Name:** BBM.&PRODUCT.&CONTEXT.&INTTABLE.OD **Entity Name after Substitution:** BBM.MVVTAM.*targetid*.SP600.OD
Application Connections - Table Data	Can the user see Application Connections? **Default Entity Name:** BBM.&PRODUCT.&CONTEXT.&INTTABLE.OD **Entity Name after Substitution:** BBM.MVVTAM.*targetid*.SP700.OD
Application Availability - Table Data	Can the user see Application Availabilty? **Default Entity Name:** BBM.&PRODUCT.&CONTEXT.&INTTABLE.OD **Entity Name after Substitution:** BBM.MVVTAM.*targetid*.SP800.OD
3270 Statistics - Table Data	Can the user see 3270 statistics? **Default Entity Name:** BBM.&PRODUCT.&CONTEXT.&INTTABLE.OD **Entity Name after Substitution:** BBM.MVVTAM.*targetid*.SP920.OD

MAINVIEW for WebSphere Application Server Resources

To disable, enable, or customize resource access authorization requests to the ESM for a MAINVIEW for WebSphere Application Server resource:

1. Display the SERDEFL view in MAINVIEW for WebSphere Application Server, as described in "Displaying a List of Members using the SERDEFL View" on page 186.
2. Select the member you want to change that has a **Product** field value of `MVWEB`.

A single entity name controls all MAINVIEW for WebSphere Application Server resources. To enable or disable all security for MAINVIEW for WebSphere Application Server, you need only disable or enable the following high-level resource:

- Default - Table Data

The following table lists all the resources that are protected by MAINVIEW for WebSphere Application Server. The **Default Entity Name** is the entity name shared by a set of similar resources and is used for high-level control of the entire set. The **Entity Name after Substitution** is the entity name with any substituted symbolic values for a particular resource.

The class name for all resources, unless otherwise indicated, is `$BBM`, which is usually, and by default, transformed to external resource class `FACILITY`.

Table 28. Resource Definitions MAINVIEW for WebSphere Application Server

Resource name in SERDEF view	Resource definition and considerations
Default - Table Data	Can the user access a MAINVIEW for WebSphere Application Server view? **Default Entity Name:** BBM.&PRODUCT.&CONTEXT.&INTTABLE.OD **Entity Name after Substitution:** BBM.MVWEB.*targetid.tableid*.OD
Web Server Information - Table Data	Can the user see the Web Server Information? **Default Entity Name:** BBM.&PRODUCT.&CONTEXT.&INTTABLE.OD **Entity Name after Substitution:** BBM.MVWEB.*targetid*.SP100.OD
Hourly Errors - Table Data	Can the user see the Web Server Performance Information? **Default Entity Name:** BBM.&PRODUCT.&CONTEXT.&INTTABLE.OD **Entity Name after Substitution:** 'BBM.MVWEB.*targetid*.SP110.OD
Requests - Table Data	Can the user see theWeb Server Requests? **Default Entity Name:** BBM.&PRODUCT.&CONTEXT.&INTTABLE.OD **Entity Name after Substitution:** BBM.MVWEB.*targetid*.SP120.OD
Responses - Table Data	Can the user see the Web Server responses? **Default Entity Name:** BBM.&PRODUCT.&CONTEXT.&INTTABLE.OD **Entity Name after Substitution:** BBM.MVWEB.*targetid*.SP130.OD

Table 28. Resource Definitions MAINVIEW for WebSphere Application Server (Continued)

Resource name in SERDEF view	Resource definition and considerations
Cache - Table Data	Can the user see the Web Server Cache Information? **Default Entity Name:** BBM.&PRODUCT.&CONTEXT.&INTTABLE.OD **Entity Name after Substitution:** BBM.MVWEB.*targetid*.SP140.OD
Access - Table Data	Can the user see Web Server Access Information? **Default Entity Name:** BBM.&PRODUCT.&CONTEXT.&INTTABLE.OD **Entity Name after Substitution:** BBM.MVWEB.*targetid*.SP150.OD
Errors - Table Data	Can the user see Web Server Errors? **Default Entity Name:** BBM.&PRODUCT.&CONTEXT.&INTTABLE.OD **Entity Name after Substitution:** BBM.MVWEB.*targetid*.SP160.OD
Hourly Errors - Table Data	Can the user see Web Server Hourly Access Information? **Default Entity Name:** BBM.&PRODUCT.&CONTEXT.&INTTABLE.OD **Entity Name after Substitution:** 'BBM.MVWEB.*targetid*.SP170.OD'
Hourly Errors - Table Data	Can the user see Web Server Hourly Errors Information? **Default Entity Name:** BBM.&PRODUCT.&CONTEXT.&INTTABLE.OD **Entity Name after Substitution:** BBM.MVWEB.*targetid*.SP180.OD
Client Response Times - Table Data	Can the user see Web Server Client Response Times? **Default Entity Name:** BBM.&PRODUCT.&CONTEXT.&INTTABLE.OD **Entity Name after Substitution:** BBM.MVWEB.*targetid*.SP200.OD

MAINVIEW for WebSphere MQ Resources

To disable, enable, or customize resource access authorization requests to the ESM for a MAINVIEW for WebSphere MQ (formerly known as MAINVIEW for MQSeries) or MAINVIEW for WebSphere MQ Integrator security resource:

1. Display the SERDEFL view in MAINVIEW for WebSphere MQ, as described in "Displaying a List of Members using the SERDEFL View" on page 186.
2. Select the member you want to change that has a **Product** field value of `MVMQS`.

A total of five unique entity names control all MAINVIEW for WebSphere MQ and MAINVIEW for WebSphere MQ Integrator resources. To enable or disable all security, you need only disable or enable all of the following high-level resources:

- Default - Table Data
- Default - Any Table Actions
- Default - Alter Data Set
- Default - Specific Table Actions
- Any Action (MAINVIEW for WebSphere MQ and MAINVIEW for WebSphere MQ Integrator Views)

The following tables list all the resources that are protected by MAINVIEW for WebSphere MQ and MAINVIEW for WebSphere MQ Integrator:

- Table 29 on page 301 lists the MAINVIEW for WebSphere MQ resources
- Table 30 on page 320 lists the MAINVIEW for WebSphere MQ Integrator resources

The **Default Entity Name** is the entity name shared by a set of similar resources and is used for high-level control of the entire set. The **Entity Name after Substitution** is the entity name with any substituted symbolic values for a particular resource. For a description of how the symbolics are used, see page 133.

The class name for all resources, unless otherwise indicated, is `$BBM`, which is usually, and by default, transformed to external resource class `FACILITY`.

Table 29. Resource Definitions for MAINVIEW for WebSphere MQ

Resource name in SERDEF view	Resource definition and considerations
DEFAULT ENTRIES	
Default - Table Data	Can the user enter a view in MAINVIEW for WebSphere MQ? This default resource controls a subset of similar resources. Enabling, disabling, or changing this resource automatically enables, disables, or changes all resources with the following default entity name: **Default Entity Name:** BBM.&PRODUCT.&CONTEXT.&INTTABLE.OD **Entity Name after Substitution:** BBM.MVMQS.*targetid*.*inttable*OD
Default - Any Table Actions	Can the user enter any actions against data in a view? This default resource controls a subset of similar resources. Enabling, disabling, or changing this resource automatically enables, disables, or changes all resources with the following default entity name: **Default Entity Name:** BBM.&PRODUCT.&CONTEXT.&INTTABLE.AO **Entity Name after Substitution:** BBM.MVMQS.*targetid*.@DFLT.AO
Default - Alter Data Set	Can the user alter a data set? The data set is usually a BBPARM or BBSECURE data set. This default resource controls a subset of similar resources. Enabling, disabling, or changing this resource automatically enables, disables, or changes all resources with the following default entity name: **Default Entity Name:** &DATASETNAME **Entity Name after Substitution:** *datasetname*
Default - Specific Table Action	Can the user enter a specific action against data in a view? This default resource controls a subset of similar resources. Enabling, disabling, or changing this resource automatically enables, disables, or changes all resources with the following default entity name: **Default Entity Name:** BBM.&PRODUCT.&CONTEXT.&INTTABLE.&INTACTION.AO **Entity Name after Substitution:** BBM.MVMQS.*targetid*.#DEFAULT.ACTION
ANY ACTION ENTRIES	
Any Action (MVMQS Views)	Can the user enter any action in MAINVIEW for WebSphere MQ? This resource controls access to all MAINVIEW for WebSphere MQ actions. Before you can effectively enter any action in MAINVIEW for WebSphere MQ when this resource is enabled, this check must first be passed. **Default Entity Name:** BBM.&PRODUCT.&CONTEXT.AA **Entity Name after Substitution:** BBM.MVMQS.*targetid*.AA

Table 29. Resource Definitions for MAINVIEW for WebSphere MQ (Continued)

Resource name in SERDEF view	Resource definition and considerations
ALIAS QUEUE ENTRIES	
AliasQueue - Table Data	Can the user access MAINVIEW for WebSphere MQ alias queue data? **Default Entity Name:** BBM.&PRODUCT.&CONTEXT.&INTTABLE.&INTACTION.OD **Entity Name after Substitution:** BBM.MVMQS.*targetid*.SAD40.OD
AliasQueue - Any Action	Can the user enter any action against MAINVIEW for WebSphere MQ alias queues? **Default Entity Name:** BBM.&PRODUCT.&CONTEXT.&INTTABLE.&INTACTION.AO **Entity Name after Substitution:** BBM.MVMQS.*targetid*.SAD40.AO
AliasQueue - Action - Description	Can the user alter the description of an alias queue? **Default Entity Name:** BBM.&PRODUCT.&CONTEXT.&INTTABLE.&INTACTION.OA **Entity Name after Substitution:** BBM.MVMQS.*targetid*.SAD40.DESCR.OA
AliasQueue - Action - Target Queue	Can the user enter an action against a Target Alias Queue? **Default Entity Name:** BBM.&PRODUCT.&CONTEXT.&INTTABLE.&INTACTION.OA **Entity Name after Substitution:** BBM.MVMQS.*targetid*.SAD40.TARGQ.OA
AliasQueue - Action - Inhibit Puts	Can the user inhibit puts against an alias queue? **Default Entity Name:** BBM.&PRODUCT.&CONTEXT.&INTTABLE.&INTACTION.OA **Entity Name after Substitution:** BBM.MVMQS.*targetid*.SAD40.PUT.OA
AliasQueue - Action - Inhibit Gets	Can the user inhibit gets against an alias queue? **Default Entity Name:** BBM.&PRODUCT.&CONTEXT.&INTTABLE.&INTACTION.OA **Entity Name after Substitution:** BBM.MVMQS.*targetid*.SAD40.GET.OA
AliasQueue - Action - Default Message Priority	Can the user alter a default message priority? **Default Entity Name:** BBM.&PRODUCT.&CONTEXT.&INTTABLE.&INTACTION.OA **Entity Name after Substitution:** BBM.MVMQS.*targetid*.SAD40.DEFPRTY.OA
AliasQueue - Action - Default Message Persistence	Can the user alter the default message persistence? **Default Entity Name:** BBM.&PRODUCT.&CONTEXT.&INTTABLE.&INTACTION.OA **Entity Name after Substitution:** BBM.MVMQS.*targetid*.SAD40.DEFPSIST.OA
AliasQueue - Action - Queue Scope	Can the user alter the queue scope? **Default Entity Name:** BBM.&PRODUCT.&CONTEXT.&INTTABLE.&INTACTION.OA **Entity Name after Substitution:** BBM.MVMQS.*targetid*.SAD40.SCOPE.OA
AliasQueue - Action - Add an AliasQueue	Can the user add an alias queue? **Default Entity Name:** BBM.&PRODUCT.&CONTEXT.&INTTABLE.&INTACTION.OA **Entity Name after Substitution:** BBM.MVMQS.*targetid*.SAD40.ADD.OA

Table 29. Resource Definitions for MAINVIEW for WebSphere MQ (Continued)

Resource name in SERDEF view	Resource definition and considerations
AliasQueue - Action - Delete an AliasQueue Nopurge	Can the user delete an alias queue? **Default Entity Name:** BBM.&PRODUCT.&CONTEXT.&INTTABLE.&INTACTION.OA **Entity Name after Substitution:** BBM.MVMQS.*targetid*.SAD40.DELETE.OA
AliasQueue - Action - Delete an AliasQueue Purge	Can the user delete an alias queue purge? **Default Entity Name:** BBM.&PRODUCT.&CONTEXT.&INTTABLE.&INTACTION.OA **Entity Name after Substitution:** BBM.MVMQS.*targetid*.SAD40.DELETEP.OA
BUFPOOL ENTRY	
BufPool - Table Data	Can the user access Buffer Pool views? **Default Entity Name:** BBM.&PRODUCT.&CONTEXT.&INTTABLE.OD **Entity Name after Substitution:** BBM.MVMQS.*targetid*.SAA40.OD
CHANNEL ENTRIES	
Channel - Table Data	Can the user access MAINVIEW for WebSphere MQ channel data? **Default Entity Name:** BBM.&PRODUCT.&CONTEXT.&INTTABLE.OD **Entity Name after Substitution:** BBM.MVMQS.*targetid*.SAC10.OD
Channel - Any Action	Can the user enter any action against MAINVIEW for WebSphere MQ channels? **Default Entity Name:** BBM.&PRODUCT.&CONTEXT.&INTTABLE.AO **Entity Name after Substitution:** BBM.MVMQS.*targetid*.SAC10.AO
Channel - Action - Start	Can the user enter a start action for a channel? **Default Entity Name:** BBM.&PRODUCT.&CONTEXT.&INTTABLE.&INTACTION.OA **Entity Name after Substitution:** BBM.MVMQS.*targetid*.SAC10.START.OA
Channel - Action - Stop	Can the user enter a stop action for a channel? **Default Entity Name:** BBM.&PRODUCT.&CONTEXT.&INTTABLE.&INTACTION.OA **Entity Name after Substitution:** BBM.MVMQS.*targetid*.SAC10.STOP.OA
Channel - Action - Add	Can the user add a channel? **Default Entity Name:** BBM.&PRODUCT.&CONTEXT.&INTTABLE.&INTACTION.OA **Entity Name after Substitution:** BBM.MVMQS.*targetid*.SAC10.ADD.OA
Channel - Action - Delete a Channel	Can the user delete a channel? **Default Entity Name:** BBM.&PRODUCT.&CONTEXT.&INTTABLE.&INTACTION.OA **Entity Name after Substitution:** BBM.MVMQS.*targetid*.SAC10.DELETE.OA
Channel - Action - Reset Sequence Number	Can the user reset the sequence number for a channel? **Default Entity Name:** BBM.&PRODUCT.&CONTEXT.&INTTABLE.&INTACTION.OA **Entity Name after Substitution:** BBM.MVMQS.*targetid*.SAC10.RESETSEQ.OA

Table 29. Resource Definitions for MAINVIEW for WebSphere MQ (Continued)

Resource name in SERDEF view	Resource definition and considerations
Channel - Action - Change Batchsize	Can the user change the batch size for a channel? **Default Entity Name:** BBM.&PRODUCT.&CONTEXT.&INTTABLE.&INTACTION.OA **Entity Name after Substitution:** BBM.MVMQS.*targetid*.SAC10.BATCHSZ.OA
Channel - Action - Change CONNAME	Can the user change the connection name for a channel? **Default Entity Name:** BBM.&PRODUCT.&CONTEXT.&INTTABLE.&INTACTION.OA **Entity Name after Substitution:** BBM.MVMQS.*targetid*.SAC10.CONNAME.OA
Channel - Action - Change Msg Conversion	Can the user change the message conversion for a channel? **Default Entity Name:** BBM.&PRODUCT.&CONTEXT.&INTTABLE.&INTACTION.OA **Entity Name after Substitution:** BBM.MVMQS.*targetid*.SAC10.CONVERT.OA
Channel - Action - Change Channel Description	Can the user change a channel description? **Default Entity Name:** BBM.&PRODUCT.&CONTEXT.&INTTABLE.&INTACTION.OA **Entity Name after Substitution:** BBM.MVMQS.*targetid*.SAC10.DESCR.OA
Channel - Action - Change Channel DISCINT	Can the user change the channel disconnect interval? **Default Entity Name:** BBM.&PRODUCT.&CONTEXT.&INTTABLE.&INTACTION.OA **Entity Name after Substitution:** BBM.MVMQS.*targetid*.SAC10.DISCINT.OA
Channel - Action - Change Channel LONGRTY	Can the user change the LONGRTY value for the channel? **Default Entity Name:** BBM.&PRODUCT.&CONTEXT.&INTTABLE.&INTACTION.OA **Entity Name after Substitution:** BBM.MVMQS.*targetid*.SAC10.LONGRTY.OA
Channel - Action - Change Channel LONGTMR	Can the user change the LONGTMR value for the channel? **Default Entity Name:** BBM.&PRODUCT.&CONTEXT.&INTTABLE.&INTACTIONOA **Entity Name after Substitution:** BBM.MVMQS.*targetid*.SAC10.LONGTMR.OA
Channel - Action - Change Channel MAXMSGL	Can the user change the channel maximum message length? **Default Entity Name:** BBM.&PRODUCT.&CONTEXT.&INTTABLE.&INTACTION.OA **Entity Name after Substitution:** BBM.MVMQS.*targetid*.SAC10.MAXMSGL.OA
Channel - Action - Change Channel MCANAME	Can the user change the Message Channel Agent name? **Default Entity Name:** BBM.&PRODUCT.&CONTEXT.&INTTABLE.&INTACTION.OA **Entity Name after Substitution:** BBM.MVMQS.*targetid*.SAC10.MCANAME.OA
Channel - Action - Change Channel MCATYPE	Can the user change the Message Channel Agent type? **Default Entity Name:** BBM.&PRODUCT.&CONTEXT.&INTTABLE.&INTACTION.OA **Entity Name after Substitution:** BBM.MVMQS.*targetid*.SAC10.MCATYPE.OA

Table 29. Resource Definitions for MAINVIEW for WebSphere MQ (Continued)

Resource name in SERDEF view	Resource definition and considerations
Channel - Action - Change Channel MCAUSER	Can the user change the Message Channel Agent user ID? **Default Entity Name:** BBM.&PRODUCT.&CONTEXT.&INTTABLE.&INTACTION.OA **Entity Name after Substitution:** BBM.MVMQS.*targetid*.SAC10.MCAUSER.OA
Channel - Action - Change Channel MODENAME	Can the user change the channel modename? **Default Entity Name:** BBM.&PRODUCT.&CONTEXT.&INTTABLE.&INTACTION.OA **Entity Name after Substitution:** BBM.MVMQS.*targetid*.SAC10.MODENAME.OA
Channel - Action - Change Channel MRDATA	Can the user change the message retry exit user data for the channel? **Default Entity Name:** BBM.&PRODUCT.&CONTEXT.&INTTABLE.&INTACTION.OA **Entity Name after Substitution:** BBM.MVMQS.*targetid*.SAC10.MRDATA.OA
Channel - Action - Change Channel MREXIT	Can the user change the message retry exit for the channel? **Default Entity Name:** BBM.&PRODUCT.&CONTEXT.&INTTABLE.&INTACTION.OA **Entity Name after Substitution:** BBM.MVMQS.*targetid*.SAC10.MREXIT.OA
Channel - Action - Change Channel MRRTY	Can the user change the message retry value for the channel? **Default Entity Name:** BBM.&PRODUCT.&CONTEXT.&INTTABLE.&INTACTION.OA **Entity Name after Substitution:** BBM.MVMQS.*targetid*.SAC10.MRRTY.OA
Channel - Action - Change Channel MRTMR	Can the user change the MRTMR value for the channel? **Default Entity Name:** BBM.&PRODUCT.&CONTEXT.&INTTABLE.&INTACTION.OA **Entity Name after Substitution:** BBM.MVMQS.*targetid*.SAC10.MRTMR.OA
Channel - Action - Change Channel MSGDATA	Can the user change the message user data for the channel? **Default Entity Name:** BBM.&PRODUCT.&CONTEXT.&INTTABLE.&INTACTION.OA **Entity Name after Substitution:** BBM.MVMQS.*targetid*.SAC10.MSGDATA.OA
Channel - Action - Change Channel MSGEXIT	Can the user change the message exit for the channel? **Default Entity Name:** BBM.&PRODUCT.&CONTEXT.&INTTABLE.&INTACTION.OA **Entity Name after Substitution:** BBM.MVMQS.*targetid*.SAC10.MSGEXIT.OA
Channel - Action - Change Channel PASSWORD	Can the user change the password for the channel? **Default Entity Name:** BBM.&PRODUCT.&CONTEXT.&INTTABLE.&INTACTION.OA **Entity Name after Substitution:** BBM.MVMQS.*targetid*.SAC10.PASSWORD.OA
Channel - Action - Change Channel PUTAUT	Can the user change the put authority for the channel? **Default Entity Name:** BBM.&PRODUCT.&CONTEXT.&INTTABLE.&INTACTION.OA **Entity Name after Substitution:** BBM.MVMQS.*targetid*.SAC10.PUTAUT.OA

Table 29. Resource Definitions for MAINVIEW for WebSphere MQ (Continued)

Resource name in SERDEF view	Resource definition and considerations
Channel - Action - Change Channel QMNAME	Can the user change the queue manager name associated with the channel? **Default Entity Name:** BBM.&PRODUCT.&CONTEXT.&INTTABLE.&INTACTION.OA **Entity Name after Substitution:** BBM.MVMQS.*targetid*.SAC10.QMNAME.OA
Channel - Action - Change Channel RCVDATA	Can the user change the receive exit user data for the channel? **Default Entity Name:** BBM.&PRODUCT.&CONTEXT.&INTTABLE.&INTACTION.OA **Entity Name after Substitution:** BBM.MVMQS.*targetid*.SAC10.RCVDATA.OA
Channel - Action - Change Channel RCVEXIT	Can the user change the receive exit name for the channel? **Default Entity Name:** BBM.&PRODUCT.&CONTEXT.&INTTABLE.&INTACTION.OA **Entity Name after Substitution:** BBM.MVMQS.*targetid*.SAC10.RCVEXIT.OA
Channel - Action - Change Channel SCYDATA	Can the user change the security exit user data for the channel? **Default Entity Name:** BBM.&PRODUCT.&CONTEXT.&INTTABLE.&INTACTION.OA **Entity Name after Substitution:** BBM.MVMQS.*targetid*.SAC10.SCYDATA.OA
Channel - Action - Change Channel SCYEXIT	Can the user change the security exit name for the channel? **Default Entity Name:** BBM.&PRODUCT.&CONTEXT.&INTTABLE.&INTACTION.OA **Entity Name after Substitution:** BBM.MVMQS.*targetid*.SAC10.SCYEXIT.OA
Channel - Action - Change Channel SENDDATA	Can the user change the send exit user data for the channel? **Default Entity Name:** BBM.&PRODUCT.&CONTEXT.&INTTABLE.&INTACTION.OA **Entity Name after Substitution:** BBM.MVMQS.*targetid*.SAC10.SENDDATA.OA
Channel - Action - Change Channel SENDEXIT	Can the user change the send exit name for the channel? **Default Entity Name:** BBM.&PRODUCT.&CONTEXT.&INTTABLE.&INTACTION.OA **Entity Name after Substitution:** BBM.MVMQS.*targetid*.SAC10.SENDEXIT.OA
Channel - Action - Change Channel SEQWRAP	Can the user change the sequence wrap for the channel? **Default Entity Name:** BBM.&PRODUCT.&CONTEXT.&INTTABLE.&INTACTION.OA **Entity Name after Substitution:** BBM.MVMQS.*targetid*.SAC10.SEQWRAP.OA
Channel - Action - Change Channel SHORTRTY	Can the user change the value for short retries for the channel? **Default Entity Name:** BBM.&PRODUCT.&CONTEXT.&INTTABLE.&INTACTION.OA **Entity Name after Substitution:** BBM.MVMQS.*targetid*.SAC10.SHORTRTY.OA
Channel - Action - Change Channel SHORTTMR	Can the user change the SHORTTMR value for the channel? **Default Entity Name:** BBM.&PRODUCT.&CONTEXT.&INTTABLE.&INTACTION.OA **Entity Name after Substitution:** BBM.MVMQS.*targetid*.SAC10.SHORTTMR.OA

Table 29. Resource Definitions for MAINVIEW for WebSphere MQ (Continued)

Resource name in SERDEF view	Resource definition and considerations
Channel - Action - Change Channel TPNAME	Can the user change the TP name for the channel? **Default Entity Name:** BBM.&PRODUCT.&CONTEXT.&INTTABLE.&INTACTION.OA **Entity Name after Substitution:** BBM.MVMQS.*targetid*.SAC10.TPNAME.OA
Channel - Action - Change Channel TRPTYPE	Can the user change the transport type for the channel? **Default Entity Name:** BBM.&PRODUCT.&CONTEXT.&INTTABLE.&INTACTION.OA **Entity Name after Substitution:** BBM.MVMQS.*targetid*.SAC10.TRPTYPE.OA
Channel - Action - Change Channel USERID	Can the user change the user ID for the channel? **Default Entity Name:** BBM.&PRODUCT.&CONTEXT.&INTTABLE.&INTACTION.OA **Entity Name after Substitution:** BBM.MVMQS.*targetid*.SAC10.USERID.OA
Channel - Action - Change Channel XMITQ	Can the user change the transmit queue for the channel? **Default Entity Name:** BBM.&PRODUCT.&CONTEXT.&INTTABLE.&INTACTION.OA **Entity Name after Substitution:** BBM.MVMQS.*targetid*.SAC10.XMITQ.OA
CICS CHANNEL ENTRIES	
CICSChnl - Table Data	Can the user access MAINVIEW for WebSphere MQ CICS channel data? **Default Entity Name:** BBM.&PRODUCT.&CONTEXT.&INTTABLE.OD **Entity Name after Substitution:** BBM.MVMQS.*targetid*.SAD50.OD
MESSAGE ENTRIES	
Message - Table Data	Can the user access MAINVIEW for WebSphere MQ message header information? **Default Entity Name:** BBM.&PRODUCT.&CONTEXT.&INTTABLE.OD **Entity Name after Substitution:** BBM.MVMQS.*targetid*.SAE10.OD
Message - Any Action	Can the user enter any action against MAINVIEW for WebSphere MQ channels? **Default Entity Name:** BBM.&PRODUCT.&CONTEXT.&INTTABLE.AO **Entity Name after Substitution:** BBM.MVMQS.*targetid*.SAE10.AO
Message - Action - Delete	Can the user delete a message? **Default Entity Name:** BBM.&PRODUCT.&CONTEXT.&INTTABLE.&INTACTION.OA **Entity Name after Substitution:** BBM.MVMQS.*targetid*.SAE10.DELETE.OA
Message - Action - Requeue	Can the user enter the requeue action for a message? **Default Entity Name:** BBM.&PRODUCT.&CONTEXT.&INTTABLE.&INTACTION.OA **Entity Name after Substitution:** BBM.MVMQS.*targetid*.SAE10.REQUEUE.OA
Message - Action - Queue	Can the user enter the queue action for a message? **Default Entity Name:** BBM.&PRODUCT.&CONTEXT.&INTTABLE.&INTACTION.OA **Entity Name after Substitution:** BBM.MVMQS.*targetid*.SAE10.QUEUE.OA

Table 29. Resource Definitions for MAINVIEW for WebSphere MQ (Continued)

Resource name in SERDEF view	Resource definition and considerations
Message - Message Text	Can the user access message data for a specific queue? **Default Entity Name:** &CONTEXT.#qname **Entity Name after Substitution:** *targetid*.queue.name where queue.name represents the name by which the queue is known to MAINVIEW for WebSphere MQ
MODEL QUEUE ENTRIES	
ModelQueue - Table Data	Can the user access MAINVIEW for WebSphere MQ model queue data? **Default Entity Name:** BBM.&PRODUCT.&CONTEXT.&INTTABLE.&INTACTION.OD **Entity Name after Substitution:** BBM.MVMQS.*targetid*.SAD60.OD
ModelQueue - Any Action	Can the user enter any action against MAINVIEW for WebSphere MQ model queues? **Default Entity Name:** BBM.&PRODUCT.&CONTEXT.&INTTABLE.&INTACTION.AO **Entity Name after Substitution:** BBM.MVMQS.*targetid*.SAD60.AO
ModelQueue - Action - Max Depth	Can the user change the maximum depth for a model queue? **Default Entity Name:** BBM.&PRODUCT.&CONTEXT.&INTTABLE.&INTACTION.OA **Entity Name after Substitution:** BBM.MVMQS.*targetid*.SAD60.MAXDEPTH.OA
ModelQueue - Action - Low Queue Depth	Can the user alter the low queue depth indicator for a model queue? **Default Entity Name:** BBM.&PRODUCT.&CONTEXT.&INTTABLE.&INTACTION.OA **Entity Name after Substitution:** BBM.MVMQS.*targetid*.SAD60.QDEPTHLO.OA
ModelQueue - Action - High Queue Depth	Can the user alter the high queue depth indicator for a model queue? **Default Entity Name:** BBM.&PRODUCT.&CONTEXT.&INTTABLE.&INTACTION.OA **Entity Name after Substitution:** BBM.MVMQS.*targetid*.SAD60.QDEPTHHI,OA
ModelQueue - Action - Service Interval Threshold	Can the user change the service interval threshold for a model queue? **Default Entity Name:** BBM.&PRODUCT.&CONTEXT.&INTTABLE.&INTACTION.OA **Entity Name after Substitution:** BBM.MVMQS.*targetid*.SAD60.QSVCINT.OA
ModelQueue - Action - Low Q Depth Event	Can the user change the value for a low queue depth event, for a model queue? **Default Entity Name:** BBM.&PRODUCT.&CONTEXT.&INTTABLE.&INTACTION.OA **Entity Name after Substitution:** BBM.MVMQS.*targetid*.SAD60.QDPLOEV.OA
ModelQueue - Action - High Q Depth Event	Can the user change the value for a high queue depth event, for a model queue? **Default Entity Name:** BBM.&PRODUCT.&CONTEXT.&INTTABLE.&INTACTION.OA **Entity Name after Substitution:** BBM.MVMQS.*targetid*.SAD60.QDPHIEV.OA

Table 29. Resource Definitions for MAINVIEW for WebSphere MQ (Continued)

Resource name in SERDEF view	Resource definition and considerations
ModelQueue - Action - Max Q Depth Event	Can the user change the value for a maximum queue depth event, for a model queue? **Default Entity Name:** BBM.&PRODUCT.&CONTEXT.&INTTABLE.&INTACTION.OA **Entity Name after Substitution:** BBM.MVMQS.*targetid*.SAD60.QDPMAXEV.OA
ModelQueue - Action - Service Interval Event	Can the user alter the value for a service interval event for a model queue? **Default Entity Name:** BBM.&PRODUCT.&CONTEXT.&INTTABLE.&INTACTION.OA **Entity Name after Substitution:** BBM.MVMQS.*targetid*.SAD60.QSVCIEV.OA
ModelQueue - Action - Inhibit Puts	Can the user alter the inhibit puts value for a model queue? **Default Entity Name:** BBM.&PRODUCT.&CONTEXT.&INTTABLE.&INTACTION.OA **Entity Name after Substitution:** BBM.MVMQS.*targetid*.SAD60.PUT.OA
ModelQueue - Action - Inhibit Gets	Can the user alter the inhibit gets value for a model queue? **Default Entity Name:** BBM.&PRODUCT.&CONTEXT.&INTTABLE.&INTACTION.OA **Entity Name after Substitution:** BBM.MVMQS.*targetid*.SAD60.GET.OA
ModelQueue - Action - Default Message Priority	Can the user alter the default message priority for a model queue? **Default Entity Name:** BBM.&PRODUCT.&CONTEXT.&INTTABLE.&INTACTION.OA **Entity Name after Substitution:** BBM.MVMQS.*targetid*.SAD60.DEFPRTY.OA
ModelQueue - Action - Default Message Persistence	Can the user alter the default message persistence for a model queue? **Default Entity Name:** BBM.&PRODUCT.&CONTEXT.&INTTABLE.&INTACTION.OA **Entity Name after Substitution:** BBM.MVMQS.*targetid*.SAD60.DEFPSIST.OA
ModelQueue - Action - Default Open for Input	Can the user change the default open for input for a model queue? **Default Entity Name:** BBM.&PRODUCT.&CONTEXT.&INTTABLE.&INTACTION.OA **Entity Name after Substitution:** BBM.MVMQS.*targetid*.SAD60.DEFSOPT.OA
ModelQueue - Action - Shareable Option	Can the user change the shareable option for a model queue? **Default Entity Name:** BBM.&PRODUCT.&CONTEXT.&INTTABLE.&INTACTION.OA **Entity Name after Substitution:** BBM.MVMQS.*targetid*.SAD60.SHARE.OA
ModelQueue - Action - Message Delivery Sequence	Can the user alter the message delivery sequence for a model queue? **Default Entity Name:** BBM.&PRODUCT.&CONTEXT.&INTTABLE.&INTACTION.OA **Entity Name after Substitution:** BBM.MVMQS.*targetid*.SAD60.MSGDLVSQ.OA
ModelQueue - Action - Storage Class	Can the user change the storage class for a model queue? **Default Entity Name:** BBM.&PRODUCT.&CONTEXT.&INTTABLE.&INTACTION.OA **Entity Name after Substitution:** BBM.MVMQS.*targetid*.SAD60.STGCLASS.OA

Table 29. Resource Definitions for MAINVIEW for WebSphere MQ (Continued)

Resource name in SERDEF view	Resource definition and considerations
ModelQueue - Action - Max Message Length	Can the user change the maximum message length? **Default Entity Name:** BBM.&PRODUCT.&CONTEXT.&INTTABLE.&INTACTION.OA **Entity Name after Substitution:** BBM.MVMQS.*targetid*.SAD60.MAXMSGL.OA
ModelQueue - Action - Description	Can the user change the description of a model queue? **Default Entity Name:** BBM.&PRODUCT.&CONTEXT.&INTTABLE.&INTACTION.OA **Entity Name after Substitution:** BBM.MVMQS.*targetid*.SAD60.DESCR.OA
ModelQueue - Action - Process Name	Can the user change the process name for a model queue? **Default Entity Name:** BBM.&PRODUCT.&CONTEXT.&INTTABLE.&INTACTION.OA **Entity Name after Substitution:** BBM.MVMQS.*targetid*.SAD60.PROCESS.OA
ModelQueue - Action - Retention Interval	Can the user change the retention interval for a model queue? **Default Entity Name:** BBM.&PRODUCT.&CONTEXT.&INTTABLE.&INTACTION.OA **Entity Name after Substitution:** BBM.MVMQS.*targetid*.SAD60.RETINTVL.OA
ModelQueue - Action - Trigger Control	Can the user alter the value for trigger control for a model queue? **Default Entity Name:** BBM.&PRODUCT.&CONTEXT.&INTTABLE.&INTACTION.OA **Entity Name after Substitution:** BBM.MVMQS.*targetid*.SAD60.TRIGGER.OA
ModelQueue - Action - Trigger Type	Can the user change the trigger type for a model queue? **Default Entity Name:** BBM.&PRODUCT.&CONTEXT.&INTTABLE.&INTACTION.OA **Entity Name after Substitution:** BBM.MVMQS.*targetid*.SAD60.TRIGTYPE.OA
ModelQueue - Action - Trigger Msg Priority	Can the user change the trigger message priority for a model queue? **Default Entity Name:** BBM.&PRODUCT.&CONTEXT.&INTTABLE.&INTACTION.OA **Entity Name after Substitution:** BBM.MVMQS.*targetid*.SAD60.TRIGMPRI.OA
ModelQueue - Action - Trigger Depth	Can the user change the trigger depth for a model queue? **Default Entity Name:** BBM.&PRODUCT.&CONTEXT.&INTTABLE.&INTACTION.OA **Entity Name after Substitution:** BBM.MVMQS.*targetid*.SAD60.TRIGDPTH.OA
ModelQueue - Action - Initiation Queue	Can the user change the initiation queue associated with a model queue? **Default Entity Name:** BBM.&PRODUCT.&CONTEXT.&INTTABLE.&INTACTION.OA **Entity Name after Substitution:** BBM.MVMQS.*targetid*.SAD60.INITQ.OA
ModelQueue - Action - Trigger Data	Can the user change the value for trigger data for a model queue? **Default Entity Name:** BBM.&PRODUCT.&CONTEXT.&INTTABLE.&INTACTION.OA **Entity Name after Substitution:** BBM.MVMQS.*targetid*.SAD60.TRIGDATA.OA

Table 29. Resource Definitions for MAINVIEW for WebSphere MQ (Continued)

Resource name in SERDEF view	Resource definition and considerations
ModelQueue - Action - Backout Threshold	Can the user change the backout threshold for a model queue? **Default Entity Name:** BBM.&PRODUCT.&CONTEXT.&INTTABLE.&INTACTION.OA **Entity Name after Substitution:** BBM.MVMQS.*targetid*.SAD60.BOTHRESH.OA
ModelQueue - Action - Backout Queue Name	Can the user change the name of the backout queue associated with a model queue? **Default Entity Name:** BBM.&PRODUCT.&CONTEXT.&INTTABLE.&INTACTION.OA **Entity Name after Substitution:** BBM.MVMQS.*targetid*.SAD60.BOQNAME.OA
ModelQueue - Action - Harden Backout Get Count	Can the user change the harden backout get count for a model queue? **Default Entity Name:** BBM.&PRODUCT.&CONTEXT.&INTTABLE.&INTACTION.OA **Entity Name after Substitution:** BBM.MVMQS.*targetid*.SAD60.HARDENBO.OA
ModelQueue - Action - Queue Usage	Can the user change the value for queue usage for a model queue? **Default Entity Name:** BBM.&PRODUCT.&CONTEXT.&INTTABLE.&INTACTION.OA **Entity Name after Substitution:** BBM.MVMQS.*targetid*.SAD60.USAGE.OA
ModelQueue - Action - Add a ModelQueue	Can the user add a model queue? **Default Entity Name:** BBM.&PRODUCT.&CONTEXT.&INTTABLE.&INTACTION.OA **Entity Name after Substitution:** BBM.MVMQS.*targetid*.SAD60.ADD.OA
ModelQueue - Action - Delete a Queue Nopurge	Can the user delete a model queue? **Default Entity Name:** BBM.&PRODUCT.&CONTEXT.&INTTABLE.&INTACTION.OA **Entity Name after Substitution:** BBM.MVMQS.*targetid*.SAD60.DELETE.OA
PAGESET ENTRY	
PageSet - Table Data	Can the user access PageSet views? **Default Entity Name:** BBM.&PRODUCT.&CONTEXT.&INTTABLE.OD **Entity Name after Substitution:** BBM.MVMQS.*targetid*.SAA60.OD
PROCESS ENTRIES	
Processes - Table Data	Can the user access MAINVIEW for WebSphere MQ process data? **Default Entity Name:** BBM.&PRODUCT.&CONTEXT.&INTTABLE.OD **Entity Name after Substitution:** BBM.MVMQS.*targetid*.SAF30.OD
Processes - Any Action	Can the user enter any action against a MAINVIEW for WebSphere MQ process? **Default Entity Name:** BBM.&PRODUCT.&CONTEXT.&INTTABLE.AO **Entity Name after Substitution:** BBM.MVMQS.*targetid*.SAF30.AO
Processes - Action - Appl Type	Can the user change the application type for a process? **Default Entity Name:** BBM.&PRODUCT.&CONTEXT.&INTTABLE.&INTACTION.OA **Entity Name after Substitution:** BBM.MVMQS.*targetid*.SAF30.CHAPLTYP.OA

Table 29. Resource Definitions for MAINVIEW for WebSphere MQ (Continued)

Resource name in SERDEF view	Resource definition and considerations
Processes - Action - Application Id	Can the user change the application ID for a process? **Default Entity Name:** BBM.&PRODUCT.&CONTEXT.&INTTABLE.&INTACTION.OA **Entity Name after Substitution:** BBM.MVMQS.*targetid*.SAF30.CHAPPLID.OA
Processes - Action - Description	Can the user change the description of a process? **Default Entity Name:** BBM.&PRODUCT.&CONTEXT.&INTTABLE.&INTACTION.OA **Entity Name after Substitution:** BBM.MVMQS.*targetid*.SAF30.CHDESC.OA
Processes - Action - Env Data	Can the user alter the environment data for a process? **Default Entity Name:** BBM.&PRODUCT.&CONTEXT.&INTTABLE.&INTACTION.OA **Entity Name after Substitution:** BBM.MVMQS.*targetid*.SAF30.CHENVIR.OA
Processes - Action - Add a Process	Can the user add a process? **Default Entity Name:** BBM.&PRODUCT.&CONTEXT.&INTTABLE.&INTACTION.OA **Entity Name after Substitution:** BBM.MVMQS.*targetid*.SAF30.ADD.OA
Processes - Action - Delete a Process	Can the user delete a process? **Default Entity Name:** BBM.&PRODUCT.&CONTEXT.&INTTABLE.&INTACTION.OA **Entity Name after Substitution:** BBM.MVMQS.*targetid*.SAF30.DELETE.OA
QUEUE ENTRIES	
Queue - Table Data	Can the user access MAINVIEW for WebSphere MQ queue data? **Default Entity Name:** BBM.&PRODUCT.&CONTEXT.&INTTABLE.OD **Entity Name after Substitution:** BBM.MVMQS.*targetid*.SAD10.OD
Queue - Any Action	Can the user enter any action against MAINVIEW for WebSphere MQ queues? **Default Entity Name:** BBM.&PRODUCT.&CONTEXT.&INTTABLE.AO **Entity Name after Substitution:** BBM.MVMQS.*targetid*.SAD10.AO
Queue - Action - Trigger Control	Can the user change the trigger control value for the queue? **Default Entity Name:** BBM.&PRODUCT.&CONTEXT.&INTTABLE.&INTACTION.OA **Entity Name after Substitution:** BBM.MVMQS.*targetid*.SAD10.TRIGGER.OA
Queue - Action - Trigger Type	Can the user change the trigger type for the queue? **Default Entity Name:** BBM.&PRODUCT.&CONTEXT.&INTTABLE.&INTACTION.OA **Entity Name after Substitution:** BBM.MVMQS.*targetid*.SAD10.TRIGTYPE.OA
Queue - Action - Trigger Msg Priority	Can the user change the default trigger message priority for the queue? **Default Entity Name:** BBM.&PRODUCT.&CONTEXT.&INTTABLE.&INTACTION.OA **Entity Name after Substitution:** BBM.MVMQS.*targetid*.SAD10.TRIGMPRI.OA

Table 29. Resource Definitions for MAINVIEW for WebSphere MQ (Continued)

Resource name in SERDEF view	Resource definition and considerations
Queue - Action - Trigger Depth	Can the user change the trigger depth for the queue? **Default Entity Name:** BBM.&PRODUCT.&CONTEXT.&INTTABLE.&INTACTION.OA **Entity Name after Substitution:** BBM.MVMQS.*targetid*.SAD10.TRIGDPTH.OA
Queue - Action - Trigger Data	Can the user alter the trigger data value for the queue? **Default Entity Name:** BBM.&PRODUCT.&CONTEXT.&INTTABLE.&INTACTION.OA **Entity Name after Substitution:** BBM.MVMQS.*targetid*.SAD10.TRIGDATA.OA
Queue - Action - Queue Scope	Can the user change the queue scope? **Default Entity Name:** BBM.&PRODUCT.&CONTEXT.&INTTABLE.&INTACTION.OA **Entity Name after Substitution:** BBM.MVMQS.*targetid*.SAD10.SCOPE.OA
Queue - Action - Queue Usage	Can the user alter the value for queue usage? **Default Entity Name:** BBM.&PRODUCT.&CONTEXT.&INTTABLE.&INTACTION.OA **Entity Name after Substitution:** BBM.MVMQS.*targetid*.SAD10.USAGE.OA
Queue - Action - Add a Queue	Can the user add a queue? **Default Entity Name:** BBM.&PRODUCT.&CONTEXT.&INTTABLE.&INTACTION.OA **Entity Name after Substitution:** BBM.MVMQS.*targetid*.SAD10.ADD.OA
Queue - Action - Storage Class	Can the user alter the storage class for a queue? **Default Entity Name:** BBM.&PRODUCT.&CONTEXT.&INTTABLE.&INTACTION.OA **Entity Name after Substitution:** BBM.MVMQS.*targetid*.SAD10.STGCLASS.OA
Queue - Action - Shareable Option	Can the user alter the shareable option for a queue? **Default Entity Name:** BBM.&PRODUCT.&CONTEXT.&INTTABLE.&INTACTION.OA **Entity Name after Substitution:** BBM.MVMQS.*targetid*.SAD10.SHARE.OA
Queue - Action - Retention Interval	Can the user alter the retention period for a queue? **Default Entity Name:** BBM.&PRODUCT.&CONTEXT.&INTTABLE.&INTACTION.OA **Entity Name after Substitution:** BBM.MVMQS.*targetid*.SAD10.RETINTVL.OA
Queue - Action - Service Interval Threshold	Can the user alter the service interval threshold for a queue? **Default Entity Name:** BBM.&PRODUCT.&CONTEXT.&INTTABLE.&INTACTION.OA **Entity Name after Substitution:** BBM.MVMQS.*targetid*.SAD10.QSVCINT.OA
Queue - Action - Service Interval Event	Can the user alter the service interval event value for a queue? **Default Entity Name:** BBM.&PRODUCT.&CONTEXT.&INTTABLE.&INTACTION.OA **Entity Name after Substitution:** BBM.MVMQS.*targetid*.SAD10.QSVCIEV.OA

Table 29. Resource Definitions for MAINVIEW for WebSphere MQ (Continued)

Resource name in SERDEF view	Resource definition and considerations
Queue - Action - Max Q Depth Event	Can the user alter the maximum queue depth event value for a queue? **Default Entity Name:** BBM.&PRODUCT.&CONTEXT.&INTTABLE.&INTACTION.OA **Entity Name after Substitution:** BBM.MVMQS.*targetid*.SAD10.QDPMAXEV.OA
Queue - Action - Low Q Depth Event	Can the user alter the low queue depth event value for a queue? **Default Entity Name:** BBM.&PRODUCT.&CONTEXT.&INTTABLE.&INTACTION.OA **Entity Name after Substitution:** BBM.MVMQS.*targetid*.SAD10.QDPLOEV.OA
Queue - Action - High Q Depth Event	Can the user alter the high queue depth event value for a queue? **Default Entity Name:** BBM.&PRODUCT.&CONTEXT.&INTTABLE.&INTACTION.OA **Entity Name after Substitution:** BBM.MVMQS.*targetid*.SAD10.QDPHIEV.OA
Queue - Action - Low Queue Depth	Can the user alter the low queue depth value for a queue? **Default Entity Name:** BBM.&PRODUCT.&CONTEXT.&INTTABLE.&INTACTION.OA **Entity Name after Substitution:** BBM.MVMQS.*targetid*.SAD10.QDEPTHLO.OA
Queue - Action - High Queue Depth	Can the user alter the high queue depth event value for a queue? **Default Entity Name:** BBM.&PRODUCT.&CONTEXT.&INTTABLE.&INTACTION.OA **Entity Name after Substitution:** BBM.MVMQS.*targetid*.SAD10.QDEPTHHI.OA
Queue - Action - Inhibit Puts	Can the user alter the inhibit puts value for a queue? **Default Entity Name:** BBM.&PRODUCT.&CONTEXT.&INTTABLE.&INTACTION.OA **Entity Name after Substitution:** BBM.MVMQS.*targetid*.SAD10.PUT.OA
Queue - Action - Process Name	Can the user alter the process name associated with a queue? **Default Entity Name:** BBM.&PRODUCT.&CONTEXT.&INTTABLE.&INTACTION.OA **Entity Name after Substitution:** BBM.MVMQS.*targetid*.SAD10.PROCESS.OA
Queue - Action - Message Delivery Sequence	Can the user alter the message delivery sequence for a queue? **Default Entity Name:** BBM.&PRODUCT.&CONTEXT.&INTTABLE.&INTACTION.OA **Entity Name after Substitution:** BBM.MVMQS.*targetid*.SAD10.MSGDLVSQ.OA
Queue - Action - Max Message Length	Can the user alter the maximum message length for a queue? **Default Entity Name:** BBM.&PRODUCT.&CONTEXT.&INTTABLE.&INTACTION.OA **Entity Name after Substitution:** BBM.MVMQS.*targetid*.SAD10.MAXMSGL.OA
Queue - Action - Max Depth	Can the user alter the maximum depth for a queue? **Default Entity Name:** BBM.&PRODUCT.&CONTEXT.&INTTABLE.&INTACTION.OA **Entity Name after Substitution:** BBM.MVMQS.*targetid*.SAD10.MAXDEPTH.OA

Table 29. Resource Definitions for MAINVIEW for WebSphere MQ (Continued)

Resource name in SERDEF view	Resource definition and considerations
Queue - Action - Initiation Queue	Can the user alter the initiation queue associated with a queue? **Default Entity Name:** BBM.&PRODUCT.&CONTEXT.&INTTABLE.&INTACTION.OA **Entity Name after Substitution:** BBM.MVMQS.*targetid*.SAD10.INITQ.OA
Queue - Action - Harden Backout Get Count	Can the user alter the harden backout attribute of a queue? **Default Entity Name:** BBM.&PRODUCT.&CONTEXT.&INTTABLE.&INTACTION.OA **Entity Name after Substitution:** BBM.MVMQS.*targetid*.SAD10.HARDENBO.OA
Queue - Action - Inhibit Gets	Can the user alter the inhibit gets value for a queue? **Default Entity Name:** BBM.&PRODUCT.&CONTEXT.&INTTABLE.&INTACTION.OA **Entity Name after Substitution:** BBM.MVMQS.*targetid*.SAD10.GET.OA
Queue - Action - Description	Can the user alter the description associated with a queue? **Default Entity Name:** BBM.&PRODUCT.&CONTEXT.&INTTABLE.&INTACTION.OA **Entity Name after Substitution:** BBM.MVMQS.*targetid*.SAD10.DESCR.OA
Queue - Action - Delete a Queue Purge	Can the user enter the delete purge action against a queue? **Default Entity Name:** BBM.&PRODUCT.&CONTEXT.&INTTABLE.&INTACTION.OA **Entity Name after Substitution:** BBM.MVMQS.*targetid*.SAD10.DELETE.OA
Queue - Action - Delete a Queue Nopurge	Can the user enter the delete without purge action against a queue? **Default Entity Name:** BBM.&PRODUCT.&CONTEXT.&INTTABLE.&INTACTION.OA BBM.MVMQS.*targetid*.SAD10.DELETEP.OA
Queue - Action - Default Open for Input	Can the user alter the default open for input attribute of a queue? **Default Entity Name:** BBM.&PRODUCT.&CONTEXT.&INTTABLE.&INTACTION.OA BBM.MVMQS.*targetid*.SAD10.DEFSOPT.OA
Queue - Action - Default Message Persistence	Can the user alter the default message persistence attribute of a queue? **Default Entity Name:** BBM.&PRODUCT.&CONTEXT.&INTTABLE.&INTACTION.OA **Entity Name after Substitution:** BBM.MVMQS.*targetid*.SAD10.DEFPSIST.OA
Queue - Action - Default Message Priority	Can the user alter the default message priority for a queue? **Default Entity Name:** BBM.&PRODUCT.&CONTEXT.&INTTABLE.&INTACTION.OA **Entity Name after Substitution:** BBM.MVMQS.*targetid*.SAD10.DEFPRTY.OA
Queue - Action - Backout Threshold	Can the user alter the backout threshold attribute of a queue? **Default Entity Name:** BBM.&PRODUCT.&CONTEXT.&INTTABLE.&INTACTION.OA **Entity Name after Substitution:** BBM.MVMQS.*targetid*.SAD10.BOTHRESH.OA

Table 29. Resource Definitions for MAINVIEW for WebSphere MQ (Continued)

Resource name in SERDEF view	Resource definition and considerations
Queue - Action - Backout Queue Name	Can the user alter the backout queue name associated with a queue? **Default Entity Name:** BBM.&PRODUCT.&CONTEXT.&INTTABLE.&INTACTION.OA **Entity Name after Substitution:** BBM.MVMQS.*targetid*.SAD10.BOQNAME.OA
QUEUE LIST ENTRIES	
Queue List - Table Data	Can the user access MAINVIEW for WebSphere MQ queue list data? **Default Entity Name:** BBM.&PRODUCT.&CONTEXT.&INTTABLE.OD **Entity Name after Substitution:** BBM.MVMQS.*targetid*.SAD70.OD
QUEUE MANAGER ENTRIES	
Queue Manager - Table Data	Can the user access MAINVIEW for WebSphere MQ queue manager data? **Default Entity Name:** BBM.&PRODUCT.&CONTEXT.&INTTABLE.od **Entity Name after Substitution:** BBM.MVMQS.*targetid*.SAA10.OD
Queue Manager - Any Action	Can the user enter any action against MAINVIEW for WebSphere MQ queue managers? **Default Entity Name:** BBM.&PRODUCT.&CONTEXT.&INTTABLE.AO **Entity Name after Substitution:** BBM.MVMQS.*targetid*.SAA10.AO
Queue Manager - Action - Trigger Interval	Can the user alter the queue manager trigger interval? **Default Entity Name:** BBM.&PRODUCT.&CONTEXT.&INTTABLE.&INTACTION.OD **Entity Name after Substitution:** BBM.MVMQS.*targetid*.SAA10.TRIGINT.OD
Queue Manager - Action - Start/Stop Event	Can the user alter the start/stop event value for a queue manager? **Default Entity Name:** BBM.&PRODUCT.&CONTEXT.&INTTABLE.&INTACTION.OD **Entity Name after Substitution:** BBM.MVMQS.*targetid*.SAA10.STRSTPEV.OD
Queue Manager - Action - Remote Event	Can the user alter the remote events value for a queue manager? **Default Entity Name:** BBM.&PRODUCT.&CONTEXT.&INTTABLE.&INTACTION.OA **Entity Name after Substitution:** BBM.MVMQS.*targetid*.SAA10.REMOTEEV.OA
Queue Manager - Action - Performance Event	Can the user alter the performance events value for a queue manager? **Default Entity Name:** BBM.&PRODUCT.&CONTEXT.&INTTABLE.&INTACTION.OA **Entity Name after Substitution:** BBM.MVMQS.*targetid*.SAA10.PERFMEV.OA
Queue Manager - Action - Max SyncPt Message	Can the user alter the maximum sync point value for a queue manager? **Default Entity Name:** BBM.&PRODUCT.&CONTEXT.&INTTABLE.&INTACTION.OA **Entity Name after Substitution:** BBM.MVMQS.*targetid*.SAA10.MAXSMSGS.OA
Queue Manager - Action - Max Handles	Can the user alter the maxium handles value for a queue manager? **Default Entity Name:** BBM.&PRODUCT.&CONTEXT.&INTTABLE.&INTACTION.OA **Entity Name after Substitution:** BBM.MVMQS.*targetid*.SAA10.MAXHANDS.OA

Table 29. Resource Definitions for MAINVIEW for WebSphere MQ (Continued)

Resource name in SERDEF view	Resource definition and considerations
Queue Manager - Action - Local Event	Can the user alter the local events value for a queue manager? **Default Entity Name:** BBM.&PRODUCT.&CONTEXT.&INTTABLE.&INTACTION.OA **Entity Name after Substitution:** BBM.MVMQS.*targetid*.SAA10.LOCALEV.OA
Queue Manager - Action - Inhibit Event	Can the user alter the inhibit event value for a queue manager? **Default Entity Name:** BBM.&PRODUCT.&CONTEXT.&INTTABLE.&INTACTION.OA **Entity Name after Substitution:** BBM.MVMQS.*targetid*.SAA10.INHIBTEV.OA
Queue Manager - Action - Description	Can the user alter the queue manager description? **Default Entity Name:** BBM.&PRODUCT.&CONTEXT.&INTTABLE.&INTACTION.OA **Entity Name after Substitution:** BBM.&MVMQS.*targetid*.SAA10.DESCR.OA
Queue Manager - Action - Dead Letter Queue	Can the user alter the dead letter queue name associated with a queue manager? **Default Entity Name:** BBM.&PRODUCT.&CONTEXT.&INTTABLE.&INTACTION.OA **Entity Name after Substitution:** BBM.MVMQS.*targetid*.SAA10.DEADQ.OA
QueueManager - Action - Authority Event	Can the user alter the Authority event value for a queue manager? **Default Entity Name:** BBM.&PRODUCT.&CONTEXT.&INTTABLE.&INTACTION.OA **Entity Name after Substitution:** BBM.MVMQS.*targetid*.SAA10.AUTHOREV.OA
QueueManager - Action - Default Transmission Queue	Can the user change the default transmission queue associated with a queue manager? **Default Entity Name:** BBM.&PRODUCT.&CONTEXT.&INTTABLE.&INTACTION.OA **Entity Name after Substitution:** BBM.MVMQS.*targetid*.SAA10.DEFXMITQ.OA
QUEUE MANAGER DEFINITION ENTRIES	
QMgrDef - Table Data	Can the user access MAINVIEW for WebSphere MQ queue manager definition data? **Default Entity Name:** BBM.&PRODUCT.&CONTEXT.&INTTABLE.OD **Entity Name after Substitution:** BBM.MVMQS.*targetid*.SAD20.OD
QMgrDef - Any Action	Can the user enter any action against MAINVIEW for WebSphere MQ queue manger definitions? **Default Entity Name:** BBM.&PRODUCT.&CONTEXT.&INTTABLE.&INTACTION.AO **Entity Name after Substitution:** BBM.MVMQS.*targetid*.SAD20.AO
QMgrDef - Action - Edit	Can the user edit queue manager definitions? **Default Entity Name:** BBM.&PRODUCT.&CONTEXT.&INTTABLE.&INTACTION.OA **Entity Name after Substitution:** BBM.MVMQS.*targetid*.SAD20.EDIT.OA
QMgrDef - Alter Data Set	Can the user change authorization for altering the queue manager definition data set? **Default Entity Name:** &DATASETNAME **Entity Name after Substitution:** BBIPARM.*datasetname*

Table 29. Resource Definitions for MAINVIEW for WebSphere MQ (Continued)

Resource name in SERDEF view	Resource definition and considerations
REMOTE QUEUE ENTRIES	
RemoteQueue - Table Data	Can the user access MAINVIEW for WebSphere MQ remote queue data? **Default Entity Name:** BBM.&PRODUCT.&CONTEXT.&INTTABLE.OD **Entity Name after Substitution:** BBM.MVMQS.*targetid*.SAD30.OD
RemoteQueue - Any Action	Can the user enter any action against MAINVIEW for WebSphere MQ remote queues? **Default Entity Name:** BBM.&PRODUCT.&CONTEXT.&INTTABLE.&INTACTION.AO **Entity Name after Substitution:** BBM.MVMQS.*targetid*.SAD30.AO
RemoteQueue - Action - Description	Can the user change the description for a remote queue? **Default Entity Name:** BBM.&PRODUCT.&CONTEXT.&INTTABLE.&INTACTION.OA **Entity Name after Substitution:** BBM.MVMQS.*targetid*.SAD30.DESCR.OA
RemoteQueue - Action - Transmission Queue	Can the user change the transmission queue associated with a remote queue? **Default Entity Name:** BBM.&PRODUCT.&CONTEXT.&INTTABLE.&INTACTION.OA **Entity Name after Substitution:** BBM.MVMQS.*targetid*.SAD30.XMITQ.OA
RemoteQueue - Action - Inhibit Puts	Can the user change the inhibit puts value for a remote queue? **Default Entity Name:** BBM.&PRODUCT.&CONTEXT.&INTTABLE.&INTACTION.OA **Entity Name after Substitution:** BBM.MVMQS.*targetid*.SAD30.PUT.OA
RemoteQueue - Action - Default Message Priority	Can the user change the default message priority for a remote queue? **Default Entity Name:** BBM.&PRODUCT.&CONTEXT.&INTTABLE.&INTACTION.OA **Entity Name after Substitution:** BBM.MVMQS.*targetid*.SAD30.DEFPRTY.OA
RemoteQueue - Action - Default Message Persistence	Can the user change the default message persistence for a remote queue? **Default Entity Name:** BBM.&PRODUCT.&CONTEXT.&INTTABLE.&INTACTION.OA **Entity Name after Substitution:** BBM.MVMQS.*targetid*.SAD30.DEFPSIST.OA
RemoteQueue - Action - Queue Scope	Can the user change the value of the queue scope for a remote queue? **Default Entity Name:** BBM.&PRODUCT.&CONTEXT.&INTTABLE.&INTACTION.OA **Entity Name after Substitution:** BBM.MVMQS.*targetid*.SAD30.SCOPE.OA
RemoteQueue - Action - Remote Qmgr Name	Can the user change the remote queue manager name associated with a remote queue? **Default Entity Name:** BBM.&PRODUCT.&CONTEXT.&INTTABLE.&INTACTION.OA **Entity Name after Substitution:** BBM.MVMQS.*targetid*.SAD30.RQMNAME.OA
RemoteQueue - Action - Remote Queue Name	Can the user change a remote queue name? **Default Entity Name:** BBM.&PRODUCT.&CONTEXT.&INTTABLE.&INTACTION.OA **Entity Name after Substitution:** BBM.MVMQS.*targetid*.SAD30.RNAME.OA

Table 29. Resource Definitions for MAINVIEW for WebSphere MQ (Continued)

Resource name in SERDEF view	Resource definition and considerations
RemoteQueue - Action - Add a RemoteQueue	Can the user add a remote queue? **Default Entity Name:** BBM.&PRODUCT.&CONTEXT.&INTTABLE.&INTACTION.OA **Entity Name after Substitution:** BBM.MVMQS.*targetid*.SAD30.ADD.OA
RemoteQueue - Action - Delete a RemoteQueue Nopurge	Can the user delete a remote queue? **Default Entity Name:** BBM.&PRODUCT.&CONTEXT.&INTTABLE.&INTACTION.OA **Entity Name after Substitution:** BBM.MVMQS.*targetid*.SAD30.DELETE.OA
RemoteQueue - Action - Delete a RemoteQueue Purge	Can the user delete a remote queue purge? **Default Entity Name:** BBM.&PRODUCT.&CONTEXT.&INTTABLE.&INTACTION.OA **Entity Name after Substitution:** BBM.MVMQS.*targetid*.SAD30.DELETEP.OA
STORAGE CLASS ENTRIES	
StorageClass- Table Data	Can the user access StorageClass views? **Default Entity Name:** BBM.&PRODUCT.&CONTEXT.&INTTABLE.OD **Entity Name after Substitution:** BBM.MVMQS.*targetid*.SAF10.OD
StorageClass- Any Action	Can the user enter any action against storage classes in MAINVIEW for WebSphere MQ? **Default Entity Name:** BBM.&PRODUCT.&CONTEXT.&INTTABLE.AO **Entity Name after Substitution:** BBM.MVMQS.*targetid*.SAF10.AO
StorageClass- Action - Change XCF Group	Can the user change storage classes in MAINVIEW for WebSphere MQ? **Default Entity Name:** BBM.&PRODUCT.&CONTEXT.&INTTABLE.&INTACTION.OA **Entity Name after Substitution:** BBM.MVMQS.*targetid*.SAF10.STCXCF.OA
StorageClass- Action - Change PagaeSet	Can the user change the PageSet ID in MAINVIEW for WebSphere MQ? **Default Entity Name:** BBM.&PRODUCT.&CONTEXT.&INTTABLE.&INTACTION.OA **Entity Name after Substitution:** BBM.MVMQS.*targetid*.SAF10.STCPSID.OA
StorageClass- Action - Change Descript	Can the user change the storage class description in MAINVIEW for WebSphere MQ? **Default Entity Name:** BBM.&PRODUCT.&CONTEXT.&INTTABLE.&INTACTION.OA **Entity Name after Substitution:** BBM.MVMQS.*targetid*.SAF10.STCDESCR.OA
StorageClass- Action - Delete StorageC	Can the user enter the DELETE action for storage classes in MAINVIEW for WebSphere MQ? **Default Entity Name:** BBM.&PRODUCT.&CONTEXT.&INTTABLE.&INTACTION.OA **Entity Name after Substitution:** BBM.MVMQS.*targetid*.SAF10.DELETE.OA
StorageClass- Action - Add new Storage	Can the user enter the ADD action for storage classes in MAINVIEW for WebSphere MQ? **Default Entity Name:** BBM.&PRODUCT.&CONTEXT.&INTTABLE.&INTACTION.OA **Entity Name after Substitution:** BBM.MVMQS.*targetid*.SAF10.ADD.OA

Table 29. Resource Definitions for MAINVIEW for WebSphere MQ (Continued)

Resource name in SERDEF view	Resource definition and considerations
THREAD ENTRIES	
Thread - Table Data	Can the user access thread views? **Default Entity Name:** BBM.&PRODUCT.&CONTEXT.&INTTABLE.OD **Entity Name after Substitution:** BBM.MVMQS.*targetid*.SAF40.OD
Thread - Any Action	Can the user enter any actions against threads in MAINVIEW for WebSphere MQ? **Default Entity Name:** BBM.&PRODUCT.&CONTEXT.&INTTABLE.AO **Entity Name after Substitution:** BBM.MVMQS.*targetid*.SAF40.AO
Thread - Action - Resolve InDoubt	Can the user enter the RESOLVE action against threads in MAINVIEW for WebSphere MQ? **Default Entity Name:** BBM.&PRODUCT.&CONTEXT.&INTTABLE.&INTACTION.OA **Entity Name after Substitution:** BBM.MVMQS.*targetid*.SAF40.RESOLVE.OA
TOPOLOGY ENTRIES	
Topology - Table Data	Can the user access MAINVIEW for WebSphere MQ topology data? **Default Entity Name:** BBM.&PRODUCT.&CONTEXT.&INTTABLE.OD **Entity Name after Substitution:** BBM.MVMQS.*targetid*.SAA20.OD

Table 30 lists the MAINVIEW for WebSphere MQ Integrator resources.

Table 30. Resource Definitions for MAINVIEW for WebSphere MQ Integrator

Resource name in SERDEF view	Resource definition and considerations
BROKER ENTRIES	
WMQI Broker - Table Data	Can the user access MAINVIEW for WebSphere MQ Integrator broker data? **Default Entity Name:** BBM.&PRODUCT.&CONTEXT.&INTTABLE.OD **Entity Name after Substitution:** BBM.MVMQS.*targetid*.IB000.OD
WMQI Broker - Any Action	Can the user enter any action against MAINVIEW for WebSphere MQ Integrator brokers? **Default Entity Name:** BBM.&PRODUCT.&CONTEXT.&INTTABLE.AO **Entity Name after Substitution:** BBM.MVMQS.*targetid*.IB000.AO
COMPONENTS ENTRIES	
WMQI Components - Table Data	Can the user access MAINVIEW for WebSphere MQ Integrator components data? **Default Entity Name:** BBM.&PRODUCT.&CONTEXT.&INTTABLE.OD **Entity Name after Substitution:** BBM.MVMQS.*targetid*.IB0E0.OD

Table 30. Resource Definitions for MAINVIEW for WebSphere MQ Integrator (Continued)

Resource name in SERDEF view	Resource definition and considerations
CONFIGURATION MANAGER ENTRIES	
WMQI Configuration Manager - Table Data	Can the user access MAINVIEW for WebSphere MQ Integrator configuration manager data? **Default Entity Name:** BBM.&PRODUCT.&CONTEXT.&INTTABLE.OD **Entity Name after Substitution:** BBM.MVMQS.*targetid*.IB0C0.OD
WMQI Configuration Manager - Any Action	Can the user enter any action against the MAINVIEW for WebSphere MQ Integrator configuration manager? **Default Entity Name:** BBM.&PRODUCT.&CONTEXT.&INTTABLE.AO **Entity Name after Substitution:** BBM.MVMQS.*targetid*.IB0C0.AO
EVENT ENTRIES	
WMQI Event - Table Data	Can the user access MAINVIEW for WebSphere MQ Integrator event data? **Default Entity Name:** BBM.&PRODUCT.&CONTEXT.&INTTABLE.OD **Entity Name after Substitution:** BBM.MVMQS.*targetid*.IB0F0.OD
WMQI Event Sources - Table Data	Can the user access MAINVIEW for WebSphere MQ Integrator event sources data? **Default Entity Name:** BBM.&PRODUCT.&CONTEXT.&INTTABLE.OD **Entity Name after Substitution:** BBM.MVMQS.*targetid*.IB1A0.OD
WMQI Event Details - Table Data	Can the user access MAINVIEW for WebSphere MQ Integrator event details data? **Default Entity Name:** BBM.&PRODUCT.&CONTEXT.&INTTABLE.OD **Entity Name after Substitution:** BBM.MVMQS.*targetid*.IB1B0.OD
EXECUTION GROUP ENTRIES	
WMQI Execution Group - Table Data	Can the user access MAINVIEW for WebSphere MQ Integrator execution group data? **Default Entity Name:** BBM.&PRODUCT.&CONTEXT.&INTTABLE.OD **Entity Name after Substitution:** BBM.MVMQS.*targetid*.IB0A0.OD
WMQI Execution Group - Any Action	Can the user enter any action against MAINVIEW for WebSphere MQ Integrator execution groups? **Default Entity Name:** BBM.&PRODUCT.&CONTEXT.&INTTABLE.AO **Entity Name after Substitution:** BBM.MVMQS.*targetid*.IB0A0.AO
MESSAGE FLOW ENTRIES	
WMQI Message Flow - Table Data	Can the user access MAINVIEW for WebSphere MQ Integrator message flow data? **Default Entity Name:** BBM.&PRODUCT.&CONTEXT.&INTTABLE.OD **Entity Name after Substitution:** BBM.MVMQS.*targetid*.IB0B0.OD

Table 30. Resource Definitions for MAINVIEW for WebSphere MQ Integrator (Continued)

Resource name in SERDEF view	Resource definition and considerations
WMQI Message Flow - Any Action	Can the user enter any action against MAINVIEW for WebSphere MQ Integrator message flows? **Default Entity Name:** BBM.&PRODUCT.&CONTEXT.&INTTABLE.AO **Entity Name after Substitution:** BBM.MVMQS.*targetid*.IB0B0.AO
NODE ENTRIES	
WMQI Nodes - Table Data	Can the user access MAINVIEW for WebSphere MQ Integrator node data? **Default Entity Name:** BBM.&PRODUCT.&CONTEXT.&INTTABLE.OD **Entity Name after Substitution:** BBM.MVMQS.*targetid*.IB010.OD
WMQI Node Details - Table Data	Can the user access MAINVIEW for WebSphere MQ Integrator node details data? **Default Entity Name:** BBM.&PRODUCT.&CONTEXT.&INTTABLE.OD **Entity Name after Substitution:** BBM.MVMQS.*targetid*.IB020.OD
USER NAME SERVER ENTRIES	
WMQI User Name Server - Table Data	Can the user access MAINVIEW for WebSphere MQ Integrator user name server data? **Default Entity Name:** BBM.&PRODUCT.&CONTEXT.&INTTABLE.OD **Entity Name after Substitution:** BBM.MVMQS.*targetid*.IB0D0.OD
WMQI User Name Server - Any Action	Can the user enter any action against the MAINVIEW for WebSphere MQ Integrator user name server? **Default Entity Name:** BBM.&PRODUCT.&CONTEXT.&INTTABLE.AO **Entity Name after Substitution:** BBM.MVMQS.*targetid*.IB0D0.AO
z/OS BROKER ENTRIES	
WMQI z/OS Broker - Table Data	Can the user access MAINVIEW for WebSphere MQ Integrator z/OS broker data? **Default Entity Name:** BBM.&PRODUCT.&CONTEXT.&INTTABLE.OD **Entity Name after Substitution:** BBM.MVMQS.*targetid*.IB030.OD
z/OS USER NAME SERVER ENTRIES	
WMQI z/OS User Name Server - Table Data	Can the user access MAINVIEW for WebSphere MQ Integrator z/OS user name server data? **Default Entity Name:** BBM.&PRODUCT.&CONTEXT.&INTTABLE.OD **Entity Name after Substitution:** BBM.MVMQS.*targetid*.IB040.OD

MAINVIEW Storage Resource Manager (SRM) Resources

To disable, enable, or customize resource access authorization requests to the ESM for a MAINVIEW SRM resource:

1. Display the SERDEFL view in MAINVIEW SRM, as described in "Displaying a List of Members using the SERDEFL View" on page 186.
2. Select the member you want to change that has a **Product** field value of `MVSRM`.

A total of three unique entity names control all MAINVIEW SRM resources. To enable or disable all security for MAINVIEW SRM products, you need only disable or enable all of the following high-level resources:

- Default - Table Data
- Default - Any Table Actions
- Default - Specific Table Actions

The following tables list all the resources that are protected by MAINVIEW SRM products:

- Table 31 on page 324 lists the MAINVIEW SRM common resources
- Table 32 on page 334 lists the MAINVIEW SRM Reporting resources

The **Default Entity Name** is the entity name shared by a set of similar resources and is used for high-level control of the entire set. The **Entity Name after Substitution** is the entity name with any substituted symbolic values for a particular resource.

The class name for all resources, unless otherwise indicated, is `$BBM`, which is usually, and by default, transformed to external resource class `FACILITY`.

Table 31. Resource Definitions for MAINVIEW SRM Common Resources

Resource name in SERDEF view	Resource definition and considerations
Default - Table Data	Can the user access a view in MAINVIEW SRM? This default resource controls a subset of similar individual resources. Enabling, disabling, or changing this resource automatically enables, disables, or changes all resources with the following entity name. **Default Entity Name:** BBM.MVSRM.&CONTEXT.&INTTABLE.OD **Entity Name after Substitution:** BBM.MVSRM.*targetid*.*tableid*.OD Specific resources with this same default entity name can be enabled, disabled, or changed on an individual basis.
Default - Any Table Actions	Can the user enter a view action for the current MAINVIEW SRM view? This default resource controls a subset of similar individual resources. Enabling, disabling, or changing this resource automatically enables, disables, or changes all resources with the following entity name. **Default Entity Name:** BBM.MVSRM.&CONTEXT.&INTTABLE.AO **Entity Name after Substitution:** BBM.MVSRM.*targetid*.*tableid*.AO Specific resources with this same default entity name can be enabled, disabled, or changed on an individual basis.
Default - Specific Table Action	Can the user enter specific view actions in specific MAINVIEW SRM views? This default resource controls a subset of similar resources. Enabling, disabling, or changing this resource automatically enables, disables, or changes all resources with the following entity name. **Default Entity Name:** BBM.MVSRM.&CONTEXT.&INTTABLE.&INTACTION.OA **Entity Name after Substitution:** BBM.MVSRM.*targetid*.*tableid*.*actionid*.OA Specific resources belonging to this subset can be enabled, disabled, or changed on an individual basis.
PARMLIBMEM - Table Data	Can the user access PARMLIBMEM Table Data? **Default Entity Name:** BBM.&PRODUCT.&CONTEXT.&INTTABLE.OD **Entity Name after Substitution:** BBM.MVSRM.*targetid*.WB010.OD
Any Action - PARMLIBMEM	Can the user enter any command from PARMLIBMEM views? **Default Entity Name:** BBM.&PRODUCT.&CONTEXT.&INTTABLE.AO **Entity Name after Substitution:** BBM.MVSRM.*targetid*.WB010.AO
PARMLIBMEM - Action - Display Member	Can the user enter the Display Member command for PARMLIBMEM records? **Default Entity Name:** BBM.&PRODUCT.&CONTEXT.&INTTABLE.&INTACTION.OA **Entity Name after Substitution:** BBM.MVSRM.*targetid*.WB010.Display.OA

Table 31. Resource Definitions for MAINVIEW SRM Common Resources (Continued)

Resource name in SERDEF view	Resource definition and considerations
PARMLIBMEM - Action - Refresh Member	Can the user enter the Refresh Member command for PARMLIBMEM records? **Default Entity Name:** BBM.&PRODUCT.&CONTEXT.WB010R.@SB01MNAM.OA **Entity Name after Substitution:** BBM.MVSRM.*targetid*.WB010R.*member*.OA where *member* is the name of the PARMLIB member being refreshed. This allows you to restrict the use of the Refresh command according to member type, which is indicated by the first six positions of the 8-byte member name.
PARMLIBMEM - Action - Browse Member	Can the user enter the Browse Member command for PARMLIBMEM records? **Default Entity Name:** BBM.&PRODUCT.&CONTEXT.&INTTABLE.&INTACTION.OA **Entity Name after Substitution:** BBM.MVSRM.*targetid*.WB010.Browse.OA
PARMLIBMEM - Action - Edit Member	Can the user enter the Edit Member command for PARMLIBMEM records? **Default Entity Name:** BBM.&PRODUCT.&CONTEXT.&INTTABLE.&INTACTION.OA **Entity Name after Substitution:** BBM.MVSRM.*targetid*.WB010.Edit.OA
PARMLIBMEM - Action - Copy Member	Can the user enter the Copy Member command for PARMLIBMEM records? **Default Entity Name:** BBM.&PRODUCT.&CONTEXT.&INTTABLE.&INTACTION.OA **Entity Name after Substitution:** BBM.MVSRM.*targetid*.WB010.Copy.OA
PARMLIBMEM - Action - Add New Member	Can the user enter the Add New Member command for PARMLIBMEM records? **Default Entity Name:** BBM.&PRODUCT.&CONTEXT.WB010N.@SB01MNAM.OA **Entity Name after Substitution:** BBM.MVSRM.*targetid*.WB010N.*member*.OA where *member* is the name of the PARMLIB member being added. This allows you to restrict the use of the New command according to member type, which is indicated by the first six positions of the 8-byte member name.
PARMLIBFUNC - Table Data	Can the user access PARMLIBFUNC Table Data? **Default Entity Name:** BBM.&PRODUCT.&CONTEXT.&INTTABLE.OD **Entity Name after Substitution:** BBM.MVSRM.*targetid*.WB020.OD
Any Action - PARMLIBFUNC	Can the user enter any command from PARMLIBFUNC views? **Default Entity Name:** BBM.&PRODUCT.&CONTEXT.&INTTABLE.AO **Entity Name after Substitution:** BBM.MVSRM.*targetid*.WB020.AO
PARMLIBFUNC - Action - Display FLST	Can the user enter the Display FLST command for PARMLIBFUNC records? **Default Entity Name:** BBM.&PRODUCT.&CONTEXT.&INTTABLE.&INTACTION.OA **Entity Name after Substitution:** BBM.MVSRM.*targetid*.WB020.DFlst.OA
PARMLIBFUNC - Action - Display RLST	Can the user enter the Display RLST command for PARMLIBFUNC records? **Default Entity Name:** BBM.&PRODUCT.&CONTEXT.&INTTABLE.&INTACTION.OA **Entity Name after Substitution:** BBM.MVSRM.*targetid*.WB020.DRlst.OA

Table 31. Resource Definitions for MAINVIEW SRM Common Resources (Continued)

Resource name in SERDEF view	Resource definition and considerations
PARMLIBFUNC - Action - Refresh Active Function	Can the user enter the Refresh Active Function command for PARMLIBFUNC records? **Default Entity Name:** BBM.&PRODUCT.&CONTEXT.WB020R.@SB02FUNC.OA **Entity Name after Substitution:** BBM.MVSRM.*targetid*.WB020R.*function*.OA where *function* is the name of the function being refreshed. This allows you to restrict the use of the Refresh command according to function name.
PARMLIBFUNC - Action - Refresh FLST	Can the user enter the Refresh FLST command for PARMLIBFUNC records? **Default Entity Name:** BBM.&PRODUCT.&CONTEXT.WB020RF.@SB02FUNC.OA **Entity Name after Substitution:** BBM.MVSRM.*targetid*.WB020RF.*function*.OA where *function* is the name of the function being refreshed. This allows you to restrict the use of the Refresh command according to function name.
PARMLIBFUNC - Action - Refresh RLST	Can the user enter the Refresh RLST command for PARMLIBFUNC records? **Default Entity Name:** BBM.&PRODUCT.&CONTEXT.WB020RR.@SB02FUNC.OA **Entity Name after Substitution:** BBM.MVSRM.*targetid*.WB020RR.*function*.OA where *function* is the name of the function being refreshed. This allows you to restrict the use of the Refresh command according to function name.
PARMLIBFUNC - Action - Activate Function	Can the user enter the Activate Function command for PARMLIBFUNC records? **Default Entity Name:** BBM.&PRODUCT.&CONTEXT.WB020A.@SB02FUNC.OA **Entity Name after Substitution:** BBM.MVSRM.*targetid*.WB020A.*function*.OA where *function* is the name of the function being activated. This allows you to restrict the use of the Activate command according to function name.
PARMLIBFUNC - Action - Inactivate Function	Can the user enter the Inactivate Function command for PARMLIBFUNC records? **Default Entity Name:** BBM.&PRODUCT.&CONTEXT.WB020I.@SB02FUNC.OA **Entity Name after Substitution:** BBM.MVSRM.*targetid*.WB020I.*function*.OA where *function* is the name of the function being inactivated. This allows you to restrict the use of the Inactivate command according to function name.
PARMLIBFUNC - Action - Change Function	Can the user enter the Change Function command for PARMLIBFUNC records? **Default Entity Name:** BBM.&PRODUCT.&CONTEXT.WB020C.@SB02FUNC.OA **Entity Name after Substitution:** BBM.MVSRM.*targetid*.WB020C.*function*.OA where *function* is the name of the function being changed. This allows you to restrict the use of the Change command according to function name.
PARMLIBFUNC - Action - Browse FLST	Can the user enter the Browse FLST command for PARMLIBFUNC records? **Default Entity Name:** BBM.&PRODUCT.&CONTEXT.&INTTABLE.&INTACTION.OA **Entity Name after Substitution:** BBM.MVSRM.*targetid*.WB020.BFlst.OA

Table 31. Resource Definitions for MAINVIEW SRM Common Resources (Continued)

Resource name in SERDEF view	Resource definition and considerations
PARMLIBFUNC - Action - Edit FLST	Can the user enter the Edit FLST command for PARMLIBFUNC records? **Default Entity Name:** BBM.&PRODUCT.&CONTEXT.&INTTABLE.&INTACTION.OA **Entity Name after Substitution:** BBM.MVSRM.*targetid*.WB020.EFlst.OA
PARMLIBFUNC - Action - Browse RLST	Can the user enter the Browse RLST command for PARMLIBFUNC records? **Default Entity Name:** BBM.&PRODUCT.&CONTEXT.&INTTABLE.&INTACTION.OA **Entity Name after Substitution:** BBM.MVSRM.*targetid*.WB020.BRlst.OA
PARMLIBFUNC - Action - Edit RLST	Can the user enter the Edit RLST command for PARMLIBFUNC records? **Default Entity Name:** BBM.&PRODUCT.&CONTEXT.&INTTABLE.&INTACTION.OA **Entity Name after Substitution:** BBM.MVSRM.*targetid*.WB020.ERlst.OA
ComponentStatus - Table Data	Can the user access ComponentStatus Table Data? **Default Entity Name:** BBM.&PRODUCT.&CONTEXT.&INTTABLE.OD **Entity Name after Substitution:** BBM.MVSRM.*targetid*.WB100.OD
Any Action - ComponentStatus	Can the user enter any command from ComponentStatus views? **Default Entity Name:** BBM.&PRODUCT.&CONTEXT.&INTTABLE.AO **Entity Name after Substitution:** BBM.MVSRM.*targetid*.WB100.AO
ComponentStatus - Action - Activate Component	Can the user enter the Activate Component command for ComponentStatus records? **Default Entity Name:** BBM.&PRODUCT.&CONTEXT.WB100S.@SB10SCOM.OA **Entity Name after Substitution:** BBM.MVSRM.*targetid*.WB100S.*component*.OA where *component* is the name of the component being activated. This allows you to restrict the use of the Activate action according to component name. Valid component names are: SVSGD, SVSGP, SVHSM, SVALLOC, SVSGA, SVESA, and SVSGC.
ComponentStatus - Action - Start Component	Can the user enter the Start Component command for ComponentStatus records? **Default Entity Name:** BBM.&PRODUCT.&CONTEXT.&INTTABLE.@SB10SCOM.OA **Entity Name after Substitution:** BBM.MVSRM.*targetid*.WB100S.*component*.OA where *component* is the name of the component being started. This allows you to restrict the use of the Start action according to component name. Valid component names are: SVSGD, SVSGP, SVHSM, SVALLOC, SVSGA, SVESA, and SVSGC.
ComponentStatus - Action - Deactivate Component	Can the user enter the Deactivate Component command for ComponentStatus records? **Default Entity Name:** BBM.&PRODUCT.&CONTEXT.WB100SP.@SB10SCOM.OA **Entity Name after Substitution:** BBM.MVSRM.*targetid*.WB100SP.*component*.OA where *component* is the name of the component being deactivated. This allows you to restrict the use of the Deactivate action according to component name. Valid component names are: SVSGD, SVSGP, SVHSM, SVALLOC, SVSGA, SVESA, and SVSGC.

Table 31. Resource Definitions for MAINVIEW SRM Common Resources (Continued)

Resource name in SERDEF view	Resource definition and considerations
ComponentStatus - Action - Stop Component	Can the user enter the Stop Component command for ComponentStatus records? **Default Entity Name:** BBM.&PRODUCT.&CONTEXT.WB100ST.@SB10SCOM.OA **Entity Name after Substitution:** BBM.MVSRM.*targetid*.WB100ST.*component*.OA where *component* is the name of the component being stopped. This allows you to restrict the use of the Stop action according to component name. Valid component names are: SVSGD, SVSGP, SVHSM, SVALLOC, SVSGA, SVESA, and SVSGC.
SmfReport - Table Data	Can the user access SmfReport Table Data? **Default Entity Name:** BBM.&PRODUCT.&CONTEXT.&INTTABLE.OD **Entity Name after Substitution:** BBM.MVSRM.*targetid*.WD010.OD
Any Action - SmfReport	Can the user enter any command from SmfReport views? **Default Entity Name:** BBM.&PRODUCT.&CONTEXT.&INTTABLE.AO **Entity Name after Substitution:** BBM.MVSRM.*targetid*.WD010.AO
SmfReport - Action - Display Member List	Can the user enter the Display Member List command for SmfReport records? **Default Entity Name:** BBM.&PRODUCT.&CONTEXT.&INTTABLE.&INTACTION.OA **Entity Name after Substitution:** BBM.MVSRM.*targetid*.WD010.Display.OA
SmfReport - Action - Browse Member	Can the user enter the Browse Member command for SmfReport records? **Default Entity Name:** BBM.&PRODUCT.&CONTEXT.&INTTABLE.&INTACTION.OA **Entity Name after Substitution:** BBM.MVSRM.*targetid*.WD010.Browse.OA
SmfReport - Action - Edit Member	Can the user enter the Edit Member command for SmfReport records? **Default Entity Name:** BBM.&PRODUCT.&CONTEXT.&INTTABLE.&INTACTION.OA **Entity Name after Substitution:** BBM.MVSRM.*targetid*.WD010.Edit.OA
MONPOOL - Table Data	Can the user access MONPOOL Table Data? **Default Entity Name:** BBM.&PRODUCT.&CONTEXT.&INTTABLE.OD **Entity Name after Substitution:** BBM.MVSRM.*targetid*.WM010.OD
Any Action - MONPOOL	Can the user enter any command from MONPOOL views? **Default Entity Name:** BBM.&PRODUCT.&CONTEXT.&INTTABLE.AO **Entity Name after Substitution:** BBM.MVSRM.*targetid*.WM010.AO
MONPOOL - Action - Display Pool Definition	Can the user enter the Display Pool Definition command for MONPOOL records? **Default Entity Name:** BBM.&PRODUCT.&CONTEXT.&INTTABLE.&INTACTION.OA **Entity Name after Substitution:** BBM.MVSRM.*targetid*.WM010.Display.OA
MONVOLPERF - Table Data	Can the user access MONVOLPERF Table Data? **Default Entity Name:** BBM.&PRODUCT.&CONTEXT.&INTTABLE.OD **Entity Name after Substitution:** BBM.MVSRM.*targetid*.WM060.OD

Table 31. Resource Definitions for MAINVIEW SRM Common Resources (Continued)

Resource name in SERDEF view	Resource definition and considerations
WBHILVLQUAL - Table Data	Can the user access WBHILVLQUAL Table Data? **Default Entity Name:** BBM.&PRODUCT.&CONTEXT.&INTTABLE.OD **Entity Name after Substitution:** BBM.MVSRM.*targetid*.WW010.OD
Any Action - WBHILVLQUAL	Can the user enter any command from WBHILVLQUAL views? **Default Entity Name:** BBM.&PRODUCT.&CONTEXT.&INTTABLE.AO **Entity Name after Substitution:** BBM.MVSRM.*targetid*.WW010.AO
WBHILVLQUAL - Action - Select Data Set	Can the user enter the Select Data Set command for WBHILVLQUAL records? **Default Entity Name:** BBM.&PRODUCT.&CONTEXT.&INTTABLE.&INTACTION.OA **Entity Name after Substitution:** BBM.MVSRM.*targetid*.WW010.WBSelect.OA
WBHILVLQUAL - Action - Catalog List	Can the user enter the Catalog List command for WBHILVLQUAL records? **Default Entity Name:** BBM.&PRODUCT.&CONTEXT.&INTTABLE.&INTACTION.OA **Entity Name after Substitution:** BBM.MVSRM.*targetid*.WW010.Catlist.OA
WBSUPERLOCATE - Table Data	Can the user access WBSUPERLOCATE Table Data? **Default Entity Name:** BBM.&PRODUCT.&CONTEXT.&INTTABLE.OD **Entity Name after Substitution:** BBM.MVSRM.*targetid*.WW020.OD
Any Action - WBSUPERLOCATE	Can the user enter any command from WBSUPERLOCATE views? **Default Entity Name:** BBM.&PRODUCT.&CONTEXT.&INTTABLE.AO **Entity Name after Substitution:** BBM.MVSRM.*targetid*.WW020.AO
WBSUPERLOCATE - Action - Copy Data Set	Can the user enter the Copy Data Set command for WBSUPERLOCATE records? **Default Entity Name:** BBM.&PRODUCT.&CONTEXT.&INTTABLE.&INTACTION.OA **Entity Name after Substitution:** BBM.MVSRM.*targetid*.WW020.Copy.OA
WBSUPERLOCATE - Action - Free Data Set	Can the user enter the Free Data Set command for WBSUPERLOCATE records? **Default Entity Name:** BBM.&PRODUCT.&CONTEXT.&INTTABLE.&INTACTION.OA **Entity Name after Substitution:** BBM.MVSRM.*targetid*.WW020.Free.OA
WBSUPERLOCATE - Action - Information on Data Set	Can the user enter the Information on Data Set command for WBSUPERLOCATE records? **Default Entity Name:** BBM.&PRODUCT.&CONTEXT.&INTTABLE.&INTACTION.OA **Entity Name after Substitution:** BBM.MVSRM.*targetid*.WW020.Info.OA
WBSUPERLOCATE - Action - Uncatalog Data Set	Can the user enter the Uncatalog Data Set command for WBSUPERLOCATE records? **Default Entity Name:** BBM.&PRODUCT.&CONTEXT.&INTTABLE.&INTACTION.OA **Entity Name after Substitution:** BBM.MVSRM.*targetid*.WW020.Uncatlg.OA

Table 31. Resource Definitions for MAINVIEW SRM Common Resources (Continued)

Resource name in SERDEF view	Resource definition and considerations
WBSUPERLOCATE - Action - VTOC Listing	Can the user enter the VTOC Listing command for WBSUPERLOCATE records? **Default Entity Name:** BBM.&PRODUCT.&CONTEXT.&INTTABLE.&INTACTION.OA **Entity Name after Substitution:** BBM.MVSRM.*targetid*.WW020.Vtoclist.OA
WBSUPERLOCATE - Action - Volume Information	Can the user enter the Volume Information command for WBSUPERLOCATE records? **Default Entity Name:** BBM.&PRODUCT.&CONTEXT.&INTTABLE.&INTACTION.OA **Entity Name after Substitution:** BBM.MVSRM.*targetid*.WW020.Volinfo.OA
WBSUPERLOCATE - Action - Compress Data Set	Can the user enter the Compress Data Set command for WBSUPERLOCATE records? **Default Entity Name:** BBM.&PRODUCT.&CONTEXT.&INTTABLE.&INTACTION.OA **Entity Name after Substitution:** BBM.MVSRM.*targetid*.WW020.Compress.OA
WBSUPERLOCATE - Action - Edit Local Data Set	Can the user enter the Edit Local Data Set command for WBSUPERLOCATE records? **Default Entity Name:** BBM.&PRODUCT.&CONTEXT.&INTTABLE.&INTACTION.OA **Entity Name after Substitution:** BBM.MVSRM.*targetid*.WW020.WEdit.OA
WBSUPERLOCATE - Action - Browse Local Data Set	Can the user enter the Browse Local Data Set command for WBSUPERLOCATE records? **Default Entity Name:** BBM.&PRODUCT.&CONTEXT.&INTTABLE.&INTACTION.OA **Entity Name after Substitution:** BBM.MVSRM.*targetid*.WW020.WBrowse.OA
WBSUPERLOCATE - Action - HSM Backup	Can the user enter the HSM Backup command for WBSUPERLOCATE records? **Default Entity Name:** BBM.&PRODUCT.&CONTEXT.&INTTABLE.&INTACTION.OA **Entity Name after Substitution:** BBM.MVSRM.*targetid*.WW020.HBackup.OA
WBSUPERLOCATE - Action - HSM Backup Delete	Can the user enter the HSM Backup Delete command for WBSUPERLOCATE records? **Default Entity Name:** BBM.&PRODUCT.&CONTEXT.&INTTABLE.&INTACTION.OA **Entity Name after Substitution:** BBM.MVSRM.*targetid*.WW020.HBDelete.OA
WBSUPERLOCATE - Action - HSM Migrate	Can the user enter the HSM Migrate command for WBSUPERLOCATE records? **Default Entity Name:** BBM.&PRODUCT.&CONTEXT.&INTTABLE.&INTACTION.OA **Entity Name after Substitution:** BBM.MVSRM.*targetid*.WW020.HMigrate.OA
WBSUPERLOCATE - Action - HSM Recover	Can the user enter the HSM Recover command for WBSUPERLOCATE records? **Default Entity Name:** BBM.&PRODUCT.&CONTEXT.&INTTABLE.&INTACTION.OA **Entity Name after Substitution:** BBM.MVSRM.*targetid*.WW020.Recover.OA
WBSUPERLOCATE - Action - HSM Recall	Can the user enter the HSM Recall command for WBSUPERLOCATE records? **Default Entity Name:** BBM.&PRODUCT.&CONTEXT.&INTTABLE.&INTACTION.OA **Entity Name after Substitution:** BBM.MVSRM.*targetid*.WW020.HRecall.OA

Table 31. Resource Definitions for MAINVIEW SRM Common Resources (Continued)

Resource name in SERDEF view	Resource definition and considerations
WBSUPERLOCATE - Action - Delete Data Set	Can the user enter the Delete Data Set command for WBSUPERLOCATE records? **Default Entity Name:** BBM.&PRODUCT.&CONTEXT.&INTTABLE.&INTACTION.OA **Entity Name after Substitution:** BBM.MVSRM.*targetid*.WW020.Deldsn.OA
WBSUPERLOCATE - Action - Catalog List	Can the user enter the Catalog List command for WBSUPERLOCATE records? **Default Entity Name:** BBM.&PRODUCT.&CONTEXT.&INTTABLE.&INTACTION.OA **Entity Name after Substitution:** BBM.MVSRM.*targetid*.WW020.Catlist.OA
WBVTOCSCOLDS - Table Data	Can the user access WBVTOCSCOLDS Table Data? **Default Entity Name:** BBM.&PRODUCT.&CONTEXT.&INTTABLE.OD **Entity Name after Substitution:** BBM.MVSRM.*targetid*.WW200.OD
Any Action - WBVTOCSCOLDS	Can the user enter any command from WBVTOCSCOLDS views? **Default Entity Name:** BBM.&PRODUCT.&CONTEXT.&INTTABLE.AO **Entity Name after Substitution:** BBM.MVSRM.*targetid*.WW200.AO
WBVTOCSCOLDS - Action - Delete Collection DSN and Entry	Can the user enter the Delete Collection DSN and Entry command for WBVTOCSCOLDS records? **Default Entity Name:** BBM.&PRODUCT.&CONTEXT.&INTTABLE.&INTACTION.OA **Entity Name after Substitution:** BBM.MVSRM.*targetid*.WW200.Delete.OA
WBVTOCSCOLDS - Action - Get Summary Record	Can the user enter the Get Summary Record command for WBVTOCSCOLDS records? **Default Entity Name:** BBM.&PRODUCT.&CONTEXT.&INTTABLE.&INTACTION.OA **Entity Name after Substitution:** BBM.MVSRM.*targetid*.WW200.GetSum.OA
WBVTOCSCOLDS - Action - Perform VTOC Scan	Can the user enter the Perform VTOC Scan command for WBVTOCSCOLDS records? **Default Entity Name:** BBM.&PRODUCT.&CONTEXT.&INTTABLE.&INTACTION.OA **Entity Name after Substitution:** BBM.MVSRM.*targetid*.WW200.Vscan.OA
WBVTOCSCOLDS - Action - Browse Filter PARMLIB Member	Can the user enter the Browse Filter PARMLIB Member command for WBVTOCSCOLDS records? **Default Entity Name:** BBM.&PRODUCT.&CONTEXT.&INTTABLE.&INTACTION.OA **Entity Name after Substitution:** BBM.MVSRM.*targetid*.WW200.Browse.OA
WBVTOCSCOLDS - Action - Edit Filter PARMLIB Member	Can the user enter the Edit Filter PARMLIB Member command for WBVTOCSCOLDS records? **Default Entity Name:** BBM.&PRODUCT.&CONTEXT.&INTTABLE.&INTACTION.OA **Entity Name after Substitution:** BBM.MVSRM.*targetid*.WW200.Edit.OA
WBVTOCSDSLST - Table Data	Can the user access WBVTOCSDSLST Table Data? **Default Entity Name:** BBM.&PRODUCT.&CONTEXT.&INTTABLE.OD **Entity Name after Substitution:** BBM.MVSRM.*targetid*.WW210.OD

Table 31. Resource Definitions for MAINVIEW SRM Common Resources (Continued)

Resource name in SERDEF view	Resource definition and considerations
Any Action - WBVTOCSDSLST	Can the user enter any command from WBVTOCSDSLST views? **Default Entity Name:** BBM.&PRODUCT.&CONTEXT.&INTTABLE.AO **Entity Name after Substitution:** BBM.MVSRM.*targetid*.WW210.AO
WBVTOCSDSLST - Action - Volume Information	Can the user enter the Volume Information command for WBVTOCSDSLST records? **Default Entity Name:** BBM.&PRODUCT.&CONTEXT.&INTTABLE.&INTACTION.OA **Entity Name after Substitution:** BBM.MVSRM.*targetid*.WW210.Volinfo.OA
WBVTOCSDSLST - Action - VTOC Listing	Can the user enter the VTOC Listing command for WBVTOCSDSLST records? **Default Entity Name:** BBM.&PRODUCT.&CONTEXT.&INTTABLE.&INTACTION.OA **Entity Name after Substitution:** BBM.MVSRM.*targetid*.WW210.Vtoclist.OA
WBVTOCSDSLST - Action - Catalog Listing	Can the user enter the Catalog Listing command for WBVTOCSDSLST records? **Default Entity Name:** BBM.&PRODUCT.&CONTEXT.&INTTABLE.&INTACTION.OA **Entity Name after Substitution:** BBM.MVSRM.*targetid*.WW210.Catlist.OA
WBVTOCSDSLST - Action - Display Data Set Information	Can the user enter the Display Data Set Information command for WBVTOCSDSLST records? **Default Entity Name:** BBM.&PRODUCT.&CONTEXT.&INTTABLE.&INTACTION.OA **Entity Name after Substitution:** BBM.MVSRM.*targetid*.WW210.Info.OA
WBVTOCSDSLST - Action - Uncatalog Data Set	Can the user enter the Uncatalog Data Set command for WBVTOCSDSLST records? **Default Entity Name:** BBM.&PRODUCT.&CONTEXT.&INTTABLE.&INTACTION.OA **Entity Name after Substitution:** BBM.MVSRM.*targetid*.WW210.Uncatlg.OA
WBVTOCSDSLST - Action - Compress Data Set	Can the user enter the Compress Data Set command for WBVTOCSDSLST records? **Default Entity Name:** BBM.&PRODUCT.&CONTEXT.&INTTABLE.&INTACTION.OA **Entity Name after Substitution:** BBM.MVSRM.*targetid*.WW210.Compress.OA
WBVTOCSDSLST - Action - HSM Backup Data Set	Can the user enter the HSM Backup Data Set command for WBVTOCSDSLST records? **Default Entity Name:** BBM.&PRODUCT.&CONTEXT.&INTTABLE.&INTACTION.OA **Entity Name after Substitution:** BBM.MVSRM.*targetid*.WW210.HBackup.OA
WBVTOCSDSLST - Action - HSM Delete Data Set	Can the user enter the HSM Delete Data Set command for WBVTOCSDSLST records? **Default Entity Name:** BBM.&PRODUCT.&CONTEXT.&INTTABLE.&INTACTION.OA **Entity Name after Substitution:** BBM.MVSRM.*targetid*.WW210.HDelete.OA
WBVTOCSDSLST - Action - HSM Migrate Data Set	Can the user enter the HSM Migrate Data Set command for WBVTOCSDSLST records? **Default Entity Name:** BBM.&PRODUCT.&CONTEXT.&INTTABLE.&INTACTION.OA **Entity Name after Substitution:** BBM.MVSRM.*targetid*.WW210.HMigrate.OA

Table 31. Resource Definitions for MAINVIEW SRM Common Resources (Continued)

Resource name in SERDEF view	Resource definition and considerations
WBVTOCSDSLST - Action - HSM Recover Data Set	Can the user enter the HSM Recover Data Set command for WBVTOCSDSLST records? **Default Entity Name:** BBM.&PRODUCT.&CONTEXT.&INTTABLE.&INTACTION.OA **Entity Name after Substitution:** BBM.MVSRM.*targetid*.WW210.Recover.OA
WBVTOCSDSLST - Action - Release Unused Space	Can the user enter the Release Unused Space command for WBVTOCSDSLST records? **Default Entity Name:** BBM.&PRODUCT.&CONTEXT.&INTTABLE.&INTACTION.OA **Entity Name after Substitution:** BBM.MVSRM.*targetid*.WW210.Free.OA
WBVTOCSDSLST - Action - Edit Local Data Set	Can the user enter the Edit Local Data Set command for WBVTOCSDSLST records? **Default Entity Name:** BBM.&PRODUCT.&CONTEXT.&INTTABLE.&INTACTION.OA **Entity Name after Substitution:** BBM.MVSRM.*targetid*.WW210.WEdit.OA
WBVTOCSDSLST - Action - Browse Local Data Set	Can the user enter the Browse Local Data Set command for WBVTOCSDSLST records? **Default Entity Name:** BBM.&PRODUCT.&CONTEXT.&INTTABLE.&INTACTION.OA **Entity Name after Substitution:** BBM.MVSRM.*targetid*.WW210.WBrowse.OA
WBVTOCSDSLST - Action - Delete Data Set	Can the user enter the Delete Data Set command for WBVTOCSDSLST records? **Default Entity Name:** BBM.&PRODUCT.&CONTEXT.&INTTABLE.&INTACTION.OA **Entity Name after Substitution:** BBM.MVSRM.*targetid*.WW210.Deldsn.OA
WBVTOCSVOLST - Table Data	Can the user access WBVTOCSVOLST Table Data? **Default Entity Name:** BBM.&PRODUCT.&CONTEXT.&INTTABLE.OD **Entity Name after Substitution:** BBM.MVSRM.*targetid*.WW220.OD
Any Action - WBVTOCSVOLST	Can the user enter any command from WBVTOCSVOLST views? **Default Entity Name:** BBM.&PRODUCT.&CONTEXT.&INTTABLE.AO **Entity Name after Substitution:** BBM.MVSRM.*targetid*.WW220.AO
WBVTOCSVOLST - Action - Volume Information	Can the user enter the Volume Information command for WBVTOCSVOLST records? **Default Entity Name:** BBM.&PRODUCT.&CONTEXT.&INTTABLE.&INTACTION.OA **Entity Name after Substitution:** BBM.MVSRM.*targetid*.WW220.Volinfo.OA

Table 32 lists the MAINVIEW SRM Reporting resources.

Table 32. Resource Definitions for MAINVIEW SRM Reporting

Resource name in SERDEF view	Resource definition and considerations
SKELJCLML - Table Data	Can the user access SKELJCLML Table Data? **Default Entity Name:** BBM.&PRODUCT.&CONTEXT.&INTTABLE.OD **Entity Name after Substitution:** BBM.MVSRM.*targetid*.WA100.OD
SKELJCLML – Any Actions	Can the user enter any command from the SKELJCLML view? **Default Entity Name:** BBM.&PRODUCT.&CONTEXT.&INTTABLE.AO **Entity Name after Substitution:** BBM.MVSRM.*targetid*.WA100.AO
SKELJCLML – Action - Edit Member	Can the user enter the Edit Member command for SKELJCLML records? **Default Entity Name:** BBM.&PRODUCT.&CONTEXT.&INTTABLE.&INTACTION.OA **Entity Name after Substitution:** BBM.MVSRM.*targetid*.WA100.Edit.OA
SKELJCLML – Action - Browse Member	Can the user enter the Browse Member command for SKELJCLML records? **Default Entity Name:** BBM.&PRODUCT.&CONTEXT.&INTTABLE.&INTACTION.OA **Entity Name after Substitution:** BBM.MVSRM.*targetid*.WA100.Browse.OA
SKELJCLML – Action - Build Skeleton and Submit	Can the user enter the Build Skeleton JCL and Submit command for SKELJCLML records? **Default Entity Name:** BBM.&PRODUCT.&CONTEXT.&INTTABLE.&INTACTION.OA **Entity Name after Substitution:** BBM.MVSRM.*targetid*.WA100.BSSubmit.OA
SKELJCLML – Action - Build Skeleton and Edit	Can the user enter the Build Skeleton JCL and Edit command for SKELJCLML records? **Default Entity Name:** BBM.&PRODUCT.&CONTEXT.&INTTABLE.&INTACTION.OA **Entity Name after Substitution:** BBM.MVSRM.*targetid*.WA100.BSEdit.OA
ACCT - Table Data	Can the user access ACCT Table Data? **Default Entity Name:** BBM.&PRODUCT.&CONTEXT.&INTTABLE.OD **Entity Name after Substitution:** BBM.MVSRMSGC.*targetid*.WC010.OD
Any Action - ACCT	Can the user enter any command from ACCT views? **Default Entity Name:** BBM.&PRODUCT.&CONTEXT.&INTTABLE.AO **Entity Name after Substitution:** BBM.MVSRMSGC.*targetid*.WC010.AO
ACCT Records - Action - Update Appl Fields	Can the user enter the Update Appl Fields command for ACCT records? **Default Entity Name:** BBM.&PRODUCT.&CONTEXT.&INTTABLE.&INTACTION.OA **Entity Name after Substitution:** BBM.MVSRMSGC.*targetid*.WC010.UpdateA.OA
ACCT Records - Action - Add Appl Fields	Can the user enter the Add Appl Fields command for ACCT records? **Default Entity Name:** BBM.&PRODUCT.&CONTEXT.&INTTABLE.&INTACTION.OA **Entity Name after Substitution:** BBM.MVSRMSGC.*targetid*.WC010.AddA.OA

Table 32. Resource Definitions for MAINVIEW SRM Reporting (Continued)

Resource name in SERDEF view	Resource definition and considerations
ACCTofDSN - Table Data	Can the user access ACCTofDSN Table Data? **Default Entity Name:** BBM.&PRODUCT.&CONTEXT.&INTTABLE.OD **Entity Name after Substitution:** BBM.MVSRMSGC.*targetid*.WC020.OD
ACCTDATA - Table Data	Can the user access ACCTDATA Table Data? **Default Entity Name:** BBM.&PRODUCT.&CONTEXT.&INTTABLE.OD **Entity Name after Substitution:** BBM.MVSRMSGC.*targetid*.WC030.OD
Any Action - ACCTDATA	Can the user enter any command from ACCTDATA views? **Default Entity Name:** BBM.&PRODUCT.&CONTEXT.&INTTABLE.AO **Entity Name after Substitution:** BBM.MVSRMSGC.*targetid*.WC030.AO
ACCTDATA Records - Action - Data Entry	Can the user enter the Data Entry command for ACCTDATA records? **Default Entity Name:** BBM.&PRODUCT.&CONTEXT.&INTTABLE.&INTACTION.OA **Entity Name after Substitution:** BBM.MVSRMSGC.*targetid*.WC030.DataEnt.OA
APPLDATA - Table Data	Can the user access APPLDATA Table Data? **Default Entity Name:** BBM.&PRODUCT.&CONTEXT.&INTTABLE.OD **Entity Name after Substitution:** BBM.MVSRMSGC.*targetid*.WC040.OD
Any Action - APPLDATA	Can the user enter any command from APPLDATA views? **Default Entity Name:** BBM.&PRODUCT.&CONTEXT.&INTTABLE.AO **Entity Name after Substitution:** BBM.MVSRMSGC.*targetid*.WC040.AO
APPLDATA Records - Action - Data Entry	Can the user enter the Data Entry command for APPLDATA records? **Default Entity Name:** BBM.&PRODUCT.&CONTEXT.&INTTABLE.&INTACTION.OA **Entity Name after Substitution:** BBM.MVSRMSGC.*targetid*.WC040.DataEnt.OA
ApplGroup - Table Data	Can the user access ApplGroup Table Data? **Default Entity Name:** BBM.&PRODUCT.&CONTEXT.&INTTABLE.OD **Entity Name after Substitution:** BBM.MVSRMSGC.*targetid*.WC050.OD
Any Action - ApplGroup	Can the user enter any command from ApplGroup views? **Default Entity Name:** BBM.&PRODUCT.&CONTEXT.&INTTABLE.AO **Entity Name after Substitution:** BBM.MVSRMSGC.*targetid*.WC050.AO
ApplGroup Records - Action - Update Appl Fields	Can the user enter the Update Appl Fields command for ApplGroup records? **Default Entity Name:** BBM.&PRODUCT.&CONTEXT.&INTTABLE.&INTACTION.OA **Entity Name after Substitution:** BBM.MVSRMSGC.*targetid*.WC050.UpdateA.OA

Table 32. Resource Definitions for MAINVIEW SRM Reporting (Continued)

Resource name in SERDEF view	Resource definition and considerations
ApplMList - Table Data	Can the user access ApplMList Table Data? **Default Entity Name:** BBM.&PRODUCT.&CONTEXT.&INTTABLE.OD **Entity Name after Substitution:** BBM.MVSRMSGC.*targetid*.WC060.OD
Any Action - ApplMList	Can the user enter any command from ApplMList views? **Default Entity Name:** BBM.&PRODUCT.&CONTEXT.&INTTABLE.AO **Entity Name after Substitution:** BBM.MVSRMSGC.*targetid*.WC060.AO
ApplMList Records - Action - Update Applications	Can the user enter the Update Applications command for ApplMList records? **Default Entity Name:** BBM.&PRODUCT.&CONTEXT.&INTTABLE.&INTACTION.OA **Entity Name after Substitution:** BBM.MVSRMSGC.*targetid*.WC060.Update.OA
HSMBkupRecovry - Table Data	Can the user access HSMBkupRecovry Table Data? **Default Entity Name:** BBM.&PRODUCT.&CONTEXT.&INTTABLE.OD **Entity Name after Substitution:** BBM.MVSRMHSM.*targetid*.WE010.OD
Any Action - HSMBkupRecovry	Can the user enter any command from HSMBkupRecovry views? **Default Entity Name:** BBM.&PRODUCT.&CONTEXT.&INTTABLE.AO **Entity Name after Substitution:** BBM.MVSRMHSM.*targetid*.WE010.AO
HSMBkupRecovry - Action - HSM Recall	Can the user enter the HSM Recall command for HSMBkupRecovry records? **Default Entity Name:** BBM.&PRODUCT.&CONTEXT.&INTTABLE.&INTACTION.OA **Entity Name after Substitution:** BBM.MVSRMHSM.*targetid*.WE010.HRecall.OA
HSMBkupRecovry - Action - HSM Migrate	Can the user enter the HSM Migrate command for HSMBkupRecovry records? **Default Entity Name:** BBM.&PRODUCT.&CONTEXT.&INTTABLE.&INTACTION.OA **Entity Name after Substitution:** BBM.MVSRMHSM.*targetid*.WE010.HMigrate.OA
HSMBkupRecovry - Action - HSM Delete Migrated	Can the user enter the HSM Delete Migrated command for HSMBkupRecovry records? **Default Entity Name:** BBM.&PRODUCT.&CONTEXT.&INTTABLE.&INTACTION.OA **Entity Name after Substitution:** BBM.MVSRMHSM.*targetid*.WE010.HDelete.OA
HSMBkupRecovry - Action - HSM Backup	Can the user enter the HSM Backup command for HSMBkupRecovry records? **Default Entity Name:** BBM.&PRODUCT.&CONTEXT.&INTTABLE.&INTACTION.OA **Entity Name after Substitution:** BBM.MVSRMHSM.*targetid*.WE010.HBackup.OA
HSMBkupRecovry - Action - HSM Backup Delete	Can the user enter the HSM Backup Delete command for HSMBkupRecovry records? **Default Entity Name:** BBM.&PRODUCT.&CONTEXT.&INTTABLE.&INTACTION.OA **Entity Name after Substitution:** BBM.MVSRMHSM.*targetid*.WE010.HBDelete.OA

Table 32. Resource Definitions for MAINVIEW SRM Reporting (Continued)

Resource name in SERDEF view	Resource definition and considerations
HSMBkupRecovry - Action - HSM Recover	Can the user enter the HSM Recover command for HSMBkupRecovry records? **Default Entity Name:** BBM.&PRODUCT.&CONTEXT.&INTTABLE.&INTACTION.OA **Entity Name after Substitution:** BBM.MVSRMHSM.*targetid*.WE010.Recover.OA
HSMBkupRecovry - Action - Detailed Information	Can the user enter the Detailed Information command for HSMBkupRecovry records? **Default Entity Name:** BBM.&PRODUCT.&CONTEXT.&INTTABLE.&INTACTION.OA **Entity Name after Substitution:** BBM.MVSRMHSM.*targetid*.WE010.Info.OA
HSMBkupRecovry - Action - Catalog List	Can the user enter the Catalog List command for HSMBkupRecovry records? **Default Entity Name:** BBM.&PRODUCT.&CONTEXT.&INTTABLE.&INTACTION.OA **Entity Name after Substitution:** BBM.MVSRMHSM.*targetid*.WE010.Catlist.OA
HSMErrorDet - Table Data	Can the user access HSMErrorDet Table Data? **Default Entity Name:** BBM.&PRODUCT.&CONTEXT.&INTTABLE.OD **Entity Name after Substitution:** BBM.MVSRMHSM.*targetid*.WE020.OD
Any Action - HSMErrorDet	Can the user enter any command from HSMErrorDet views? **Default Entity Name:** BBM.&PRODUCT.&CONTEXT.&INTTABLE.AO **Entity Name after Substitution:** BBM.MVSRMHSM.*targetid*.WE020.AO
HSMErrorDet - Action - HSM Recall	Can the user enter the HSM Recall command for HSMErrorDet records? **Default Entity Name:** BBM.&PRODUCT.&CONTEXT.&INTTABLE.&INTACTION.OA **Entity Name after Substitution:** BBM.MVSRMHSM.*targetid*.WE020.HRecall.OA
HSMErrorDet - Action - HSM Migrate	Can the user enter the HSM Migrate command for HSMErrorDet records? **Default Entity Name:** BBM.&PRODUCT.&CONTEXT.&INTTABLE.&INTACTION.OA **Entity Name after Substitution:** BBM.MVSRMHSM.*targetid*.WE020.HMigrate.OA
HSMErrorDet - Action - HSM Delete Migrated	Can the user enter the HSM Delete Migrated command for HSMErrorDet records? **Default Entity Name:** BBM.&PRODUCT.&CONTEXT.&INTTABLE.&INTACTION.OA **Entity Name after Substitution:** BBM.MVSRMHSM.*targetid*.WE020.HDelete.OA
HSMErrorDet - Action - HSM Backup	Can the user enter the HSM Backup command for HSMErrorDet records? **Default Entity Name:** BBM.&PRODUCT.&CONTEXT.&INTTABLE.&INTACTION.OA **Entity Name after Substitution:** BBM.MVSRMHSM.*targetid*.WE020.HBackup.OA
HSMErrorDet - Action - HSM Backup Delete	Can the user enter the HSM Backup Delete command for HSMErrorDet records? **Default Entity Name:** BBM.&PRODUCT.&CONTEXT.&INTTABLE.&INTACTION.OA **Entity Name after Substitution:** BBM.MVSRMHSM.*targetid*.WE020.HBDelete.OA

Table 32. Resource Definitions for MAINVIEW SRM Reporting (Continued)

Resource name in SERDEF view	Resource definition and considerations
HSMErrorDet - Action - HSM Recover	Can the user enter the HSM Recover command for HSMErrorDet records? **Default Entity Name:** BBM.&PRODUCT.&CONTEXT.&INTTABLE.&INTACTION.OA **Entity Name after Substitution:** BBM.MVSRMHSM.*targetid*.WE020.Recover.OA
HSMErrorDet - Action - Quick Reference	Can the user enter the Quick Reference command for HSMErrorDet records? **Default Entity Name:** BBM.&PRODUCT.&CONTEXT.&INTTABLE.&INTACTION.OA **Entity Name after Substitution:** BBM.MVSRMHSM.*targetid*.WE020.QuickRef.OA
HSMErrorDet - Action - Detailed Information	Can the user enter the Detailed Information command for HSMErrorDet records? **Default Entity Name:** BBM.&PRODUCT.&CONTEXT.&INTTABLE.&INTACTION.OA **Entity Name after Substitution:** BBM.MVSRMHSM.*targetid*.WE020.Info.OA
HSMErrorDet - Action - Catalog List	Can the user enter the Catalog List command for HSMErrorDet records? **Default Entity Name:** BBM.&PRODUCT.&CONTEXT.&INTTABLE.&INTACTION.OA **Entity Name after Substitution:** BBM.MVSRMHSM.*targetid*.WE020.Catlist.OA
HSMErrorDet - Action - Messages	Can the user enter the Messages command for HSMErrorDet records? **Default Entity Name:** BBM.&PRODUCT.&CONTEXT.&INTTABLE.&INTACTION.OA **Entity Name after Substitution:** BBM.MVSRMHSM.*targetid*.WE020.Message.OA
HSMErrors - Table Data	Can the user access HSMErrors Table Data? **Default Entity Name:** BBM.&PRODUCT.&CONTEXT.&INTTABLE.OD **Entity Name after Substitution:** BBM.MVSRMHSM.*targetid*.WE030.OD
Any Action - HSMErrors	Can the user enter any command from HSMErrors views? **Default Entity Name:** BBM.&PRODUCT.&CONTEXT.&INTTABLE.AO **Entity Name after Substitution:** BBM.MVSRMHSM.*targetid*.WE030.AO
HSMErrors - Action - Quick Reference	Can the user enter the Quick Reference command for HSMErrors records? **Default Entity Name:** BBM.&PRODUCT.&CONTEXT.&INTTABLE.&INTACTION.OA **Entity Name after Substitution:** BBM.MVSRMHSM.*targetid*.WE030.QuickRef.OA
HSMErrors - Action - Messages	Can the user enter the Messages command for HSMErrors records? **Default Entity Name:** BBM.&PRODUCT.&CONTEXT.&INTTABLE.&INTACTION.OA **Entity Name after Substitution:** BBM.MVSRMHSM.*targetid*.WE030.Message.OA
HSMLogEntries - Table Data	Can the user access HSMLogEntries Table Data? **Default Entity Name:** BBM.&PRODUCT.&CONTEXT.&INTTABLE.OD **Entity Name after Substitution:** BBM.MVSRMHSM.*targetid*.WE040.OD

Table 32. Resource Definitions for MAINVIEW SRM Reporting (Continued)

Resource name in SERDEF view	Resource definition and considerations
Any Action - HSMLogEntries	Can the user enter any command from HSMLogEntries views? **Default Entity Name:** BBM.&PRODUCT.&CONTEXT.&INTTABLE.AO **Entity Name after Substitution:** BBM.MVSRMHSM.*targetid*.WE040.AO
HSMLogEntries - Action - HSM Recall	Can the user enter the HSM Recall command for HSMLogEntries records? **Default Entity Name:** BBM.&PRODUCT.&CONTEXT.&INTTABLE.&INTACTION.OA **Entity Name after Substitution:** BBM.MVSRMHSM.*targetid*.WE040.HRecall.OA
HSMLogEntries - Action - HSM Migrate	Can the user enter the HSM Migrate command for HSMLogEntries records? **Default Entity Name:** BBM.&PRODUCT.&CONTEXT.&INTTABLE.&INTACTION.OA **Entity Name after Substitution:** BBM.MVSRMHSM.*targetid*.WE040.HMigrate.OA
HSMLogEntries - Action - HSM Delete Migrated	Can the user enter the HSM Delete Migrated command for HSMLogEntries records? **Default Entity Name:** BBM.&PRODUCT.&CONTEXT.&INTTABLE.&INTACTION.OA **Entity Name after Substitution:** BBM.MVSRMHSM.*targetid*.WE040.HDelete.OA
HSMLogEntries - Action - HSM Backup	Can the user enter the HSM Backup command for HSMLogEntriest records? **Default Entity Name:** BBM.&PRODUCT.&CONTEXT.&INTTABLE.&INTACTION.OA **Entity Name after Substitution:** BBM.MVSRMHSM.*targetid*.WE040.HBackup.OA
HSMLogEntries - Action - HSM Backup Delete	Can the user enter the HSM Backup Delete command for HSMLogEntries records? **Default Entity Name:** BBM.&PRODUCT.&CONTEXT.&INTTABLE.&INTACTION.OA **Entity Name after Substitution:** BBM.MVSRMHSM.*targetid*.WE040.HBDelete.OA
HSMLogEntries - Action - HSM Recover	Can the user enter the HSM Recover command for HSMLogEntries records? **Default Entity Name:** BBM.&PRODUCT.&CONTEXT.&INTTABLE.&INTACTION.OA **Entity Name after Substitution:** BBM.MVSRMHSM.*targetid*.WE040.Recover.OA
HSMLogEntries - Action - Quick Reference	Can the user enter the Quick Reference command for HSMLogEntries records? **Default Entity Name:** BBM.&PRODUCT.&CONTEXT.&INTTABLE.&INTACTION.OA **Entity Name after Substitution:** BBM.MVSRMHSM.*targetid*.WE040.QuickRef.OA
HSMLogEntries - Action - Detailed Information	Can the user enter the Detailed Information command for HSMLogEntries records? **Default Entity Name:** BBM.&PRODUCT.&CONTEXT.&INTTABLE.&INTACTION.OA **Entity Name after Substitution:** BBM.MVSRMHSM.*targetid*.WE040.Info.OA
HSMLogEntries - Action - Catalog List	Can the user enter the Catalog List command for HSMLogEntries records? **Default Entity Name:** BBM.&PRODUCT.&CONTEXT.&INTTABLE.&INTACTION.OA **Entity Name after Substitution:** BBM.MVSRMHSM.*targetid*.WE040.Catlist.OA

Table 32. Resource Definitions for MAINVIEW SRM Reporting (Continued)

Resource name in SERDEF view	Resource definition and considerations
HSMLogEntries - Action - Messages	Can the user enter the Messages command for HSMLogEntries records? **Default Entity Name:** BBM.&PRODUCT.&CONTEXT.&INTTABLE.&INTACTION.OA **Entity Name after Substitution:** BBM.MVSRMHSM.*targetid*.WE040.Message.OA
HSMMigratAct - Table Data	Can the user access HSMMigratAct Table Data? **Default Entity Name:** BBM.&PRODUCT.&CONTEXT.&INTTABLE.OD **Entity Name after Substitution:** BBM.MVSRMHSM.*targetid*.WE050.OD
Any Action - HSMMigratAct	Can the user enter any command from HSMMigratAct views? **Default Entity Name:** BBM.&PRODUCT.&CONTEXT.&INTTABLE.AO **Entity Name after Substitution:** BBM.MVSRMHSM.*targetid*.WE050.AO
HSMMigratAct - Action - HSM Recall	Can the user enter the HSM Recall command for HSMMigratAct records? **Default Entity Name:** BBM.&PRODUCT.&CONTEXT.&INTTABLE.&INTACTION.OA **Entity Name after Substitution:** BBM.MVSRMHSM.*targetid*.WE050.HRecall.OA
HSMMigratAct - Action - HSM Migrate	Can the user enter the HSM Migrate command for HSMMigratAct records? **Default Entity Name:** BBM.&PRODUCT.&CONTEXT.&INTTABLE.&INTACTION.OA **Entity Name after Substitution:** BBM.MVSRMHSM.*targetid*.WE050.HMigrate.OA
HSMMigratAct - Action - HSM Delete Migrated	Can the user enter the HSM Delete Migrated command for HSMMigratAct records? **Default Entity Name:** BBM.&PRODUCT.&CONTEXT.&INTTABLE.&INTACTION.OA **Entity Name after Substitution:** BBM.MVSRMHSM.*targetid*.WE050.HDelete.OA
HSMMigratAct - Action - HSM Backup	Can the user enter the HSM Backup command for HSMMigratAct records? **Default Entity Name:** BBM.&PRODUCT.&CONTEXT.&INTTABLE.&INTACTION.OA **Entity Name after Substitution:** BBM.MVSRMHSM.*targetid*.WE050.HBackup.OA
HSMMigratAct - Action - HSM Backup Delete	Can the user enter the HSM Backup Delete command for HSMMigratAct records? **Default Entity Name:** BBM.&PRODUCT.&CONTEXT.&INTTABLE.&INTACTION.OA **Entity Name after Substitution:** BBM.MVSRMHSM.*targetid*.WE050.HBDelete.OA
HSMMigratAct - Action - HSM Recover	Can the user enter the HSM Recover command for HSMMigratAct records? **Default Entity Name:** BBM.&PRODUCT.&CONTEXT.&INTTABLE.&INTACTION.OA **Entity Name after Substitution:** BBM.MVSRMHSM.*targetid*.WE050.Recover.OA
HSMMigratAct - Action - Detailed Information	Can the user enter the Detailed Information command for HSMMigratAct records? **Default Entity Name:** BBM.&PRODUCT.&CONTEXT.&INTTABLE.&INTACTION.OA **Entity Name after Substitution:** BBM.MVSRMHSM.*targetid*.WE050.Info.OA

Table 32. Resource Definitions for MAINVIEW SRM Reporting (Continued)

Resource name in SERDEF view	Resource definition and considerations
HSMMigratAct - Action - Catalog List	Can the user enter the Catalog List command for HSMMigratAct records? **Default Entity Name:** BBM.&PRODUCT.&CONTEXT.&INTTABLE.&INTACTION.OA **Entity Name after Substitution:** BBM.MVSRMHSM.*targetid*.WE050.Catlist.OA
HSMMigratThrash - Table Data	Can the user access HSMMigratThrash Table Data? **Default Entity Name:** BBM.&PRODUCT.&CONTEXT.&INTTABLE.OD **Entity Name after Substitution:** BBM.MVSRMHSM.*targetid*.WE060.OD
Any Action - HSMMigratThrash	Can the user enter any command from HSMMigratThrash views? **Default Entity Name:** BBM.&PRODUCT.&CONTEXT.&INTTABLE.AO **Entity Name after Substitution:** BBM.MVSRMHSM.*targetid*.WE060.AO
HSMMigratThrash - Action - HSM Recall	Can the user enter the HSM Recall command for HSMMigratThrash records? **Default Entity Name:** BBM.&PRODUCT.&CONTEXT.&INTTABLE.&INTACTION.OA **Entity Name after Substitution:** BBM.MVSRMHSM.*targetid*.WE060.HRecall.OA
HSMMigratThrash - Action - HSM Migrate	Can the user enter the HSM Migrate command for HSMMigratThrash records? **Default Entity Name:** BBM.&PRODUCT.&CONTEXT.&INTTABLE.&INTACTION.OA **Entity Name after Substitution:** BBM.MVSRMHSM.*targetid*.WE060.HMigrate.OA
HSMMigratThrash - Action - HSM Delete Migrated	Can the user enter the HSM Delete Migrated command for HSMMigratThrash records? **Default Entity Name:** BBM.&PRODUCT.&CONTEXT.&INTTABLE.&INTACTION.OA **Entity Name after Substitution:** BBM.MVSRMHSM.*targetid*.WE060.HDelete.OA
HSMMigratThrash - Action - HSM Backup	Can the user enter the HSM Backup command for HSMMigratThrash records? **Default Entity Name:** BBM.&PRODUCT.&CONTEXT.&INTTABLE.&INTACTION.OA **Entity Name after Substitution:** BBM.MVSRMHSM.*targetid*.WE060.HBackup.OA
HSMMigratThrash - Action - HSM Backup Delete	Can the user enter the HSM Backup Delete command for HSMMigratThrash records? **Default Entity Name:** BBM.&PRODUCT.&CONTEXT.&INTTABLE.&INTACTION.OA **Entity Name after Substitution:** BBM.MVSRMHSM.*targetid*.WE060.HBDelete.OA
HSMMigratThrash - Action - HSM Recover	Can the user enter the HSM Recover command for HSMMigratThrash records? **Default Entity Name:** BBM.&PRODUCT.&CONTEXT.&INTTABLE.&INTACTION.OA **Entity Name after Substitution:** BBM.MVSRMHSM.*targetid*.WE060.Recover.OA
HSMMigratThrash - Action - Detailed Information	Can the user enter the Detailed Information command for HSMMigratThrash records? **Default Entity Name:** BBM.&PRODUCT.&CONTEXT.&INTTABLE.&INTACTION.OA **Entity Name after Substitution:** BBM.MVSRMHSM.*targetid*.WE060.Info.OA

Table 32. Resource Definitions for MAINVIEW SRM Reporting (Continued)

Resource name in SERDEF view	Resource definition and considerations
HSMMigratThrash - Action - Catalog List	Can the user enter the Catalog List command for HSMMigratThrash records? **Default Entity Name:** BBM.&PRODUCT.&CONTEXT.&INTTABLE.&INTACTION.OA **Entity Name after Substitution:** BBM.MVSRMHSM.*targetid*.WE060.Catlist.OA
HSMRecallAct - Table Data	Can the user access HSMRecallAct Table Data? **Default Entity Name:** BBM.&PRODUCT.&CONTEXT.&INTTABLE.OD **Entity Name after Substitution:** BBM.MVSRMHSM.*targetid*.WE070.OD
Any Action - HSMRecallAct	Can the user enter any command from HSMRecallAct views? **Default Entity Name:** BBM.&PRODUCT.&CONTEXT.&INTTABLE.AO **Entity Name after Substitution:** BBM.MVSRMHSM.*targetid*.WE070.AO
HSMRecallAct - Action - HSM Recall	Can the user enter the HSM Recall command for HSMRecallAct records? **Default Entity Name:** BBM.&PRODUCT.&CONTEXT.&INTTABLE.&INTACTION.OA **Entity Name after Substitution:** BBM.MVSRMHSM.*targetid*.WE070.HRecall.OA
HSMRecallAct - Action - HSM Migrate	Can the user enter the HSM Migrate command for HSMRecallAct records? **Default Entity Name:** BBM.&PRODUCT.&CONTEXT.&INTTABLE.&INTACTION.OA **Entity Name after Substitution:** BBM.MVSRMHSM.*targetid*.WE070.HMigrate.OA
HSMRecallAct - Action - HSM Delete Migrated	Can the user enter the HSM Delete Migrated command for HSMRecallAct records? **Default Entity Name:** BBM.&PRODUCT.&CONTEXT.&INTTABLE.&INTACTION.OA **Entity Name after Substitution:** BBM.MVSRMHSM.*targetid*.WE070.HDelete.OA
HSMRecallAct - Action - HSM Backup	Can the user enter the HSM Backup command for HSMRecallAct records? **Default Entity Name:** BBM.&PRODUCT.&CONTEXT.&INTTABLE.&INTACTION.OA **Entity Name after Substitution:** BBM.MVSRMHSM.*targetid*.WE070.HBackup.OA
HSMRecallAct - Action - HSM Backup Delete	Can the user enter the HSM Backup Delete command for HSMRecallAct records? **Default Entity Name:** BBM.&PRODUCT.&CONTEXT.&INTTABLE.&INTACTION.OA **Entity Name after Substitution:** BBM.MVSRMHSM.*targetid*.WE070.HBDelete.OA
HSMRecallAct - Action - HSM Recover	Can the user enter the HSM Recover command for HSMRecallAct records? **Default Entity Name:** BBM.&PRODUCT.&CONTEXT.&INTTABLE.&INTACTION.OA **Entity Name after Substitution:** BBM.MVSRMHSM.*targetid*.WE070.Recover.OA
HSMRecallAct - Action - Detailed Information	Can the user enter the Detailed Information command for HSMRecallAct records? **Default Entity Name:** BBM.&PRODUCT.&CONTEXT.&INTTABLE.&INTACTION.OA **Entity Name after Substitution:** BBM.MVSRMHSM.*targetid*.WE070.Info.OA

Table 32. Resource Definitions for MAINVIEW SRM Reporting (Continued)

Resource name in SERDEF view	Resource definition and considerations
HSMRecallAct - Action - Catalog List	Can the user enter the Catalog List command for HSMRecallAct records? **Default Entity Name:** BBM.&PRODUCT.&CONTEXT.&INTTABLE.&INTACTION.OA **Entity Name after Substitution:** BBM.MVSRMHSM.*targetid*.WE070.Catlist.OA
HSMDSDeletions - Table Data	Can the user access HSMDSDeletions Table Data? **Default Entity Name:** BBM.&PRODUCT.&CONTEXT.&INTTABLE.OD **Entity Name after Substitution:** BBM.MVSRMHSM.*targetid*.WE080.OD
Any Action - HSMDSDeletions	Can the user enter any command from HSMDSDeletions views? **Default Entity Name:** BBM.&PRODUCT.&CONTEXT.&INTTABLE.AO **Entity Name after Substitution:** BBM.MVSRMHSM.*targetid*.WE080.AO
HSMDSDeletions - Action - HSM Backup Delete	Can the user enter the HSM Backup Delete command for HSMDSDeletions records? **Default Entity Name:** BBM.&PRODUCT.&CONTEXT.&INTTABLE.&INTACTION.OA **Entity Name after Substitution:** BBM.MVSRMHSM.*targetid*.WE080.HBDelete.OA
HSMDSDeletions - Action - HSM Recover	Can the user enter the HSM Recover command for HSMDSDeletions records? **Default Entity Name:** BBM.&PRODUCT.&CONTEXT.&INTTABLE.&INTACTION.OA **Entity Name after Substitution:** BBM.MVSRMHSM.*targetid*.WE080.Recover.OA
HSMDlyACT - Table Data	Can the user access HSMDlyACT Table Data? **Default Entity Name:** BBM.&PRODUCT.&CONTEXT.&INTTABLE.OD **Entity Name after Substitution:** BBM.MVSRM.*targetid*.WE090.OD
HSMDLYVOL - Table Data	Can the user access HSMDLYVOL Table Data? **Default Entity Name:** BBM.&PRODUCT.&CONTEXT.&INTTABLE.OD **Entity Name after Substitution:** BBM.MVSRMHSM.*targetid*.WE100.OD
HSMMigratL1L2 - Table Data	Can the user access HSMMigratL1L2 Table Data? **Default Entity Name:** BBM.&PRODUCT.&CONTEXT.&INTTABLE.OD **Entity Name after Substitution:** BBM.MVSRMHSM.*targetid*.WE110.OD
Any Action - HSMMigratL1L2	Can the user enter any command from HSMMigratL1L2 views? **Default Entity Name:** BBM.&PRODUCT.&CONTEXT.&INTTABLE.AO **Entity Name after Substitution:** BBM.MVSRMHSM.*targetid*.WE110.AO
HSMMigratL1L2 - Action - HSM Recall	Can the user enter the HSM Recall command for HSMMigratL1L2 records? **Default Entity Name:** BBM.&PRODUCT.&CONTEXT.&INTTABLE.&INTACTION.OA **Entity Name after Substitution:** BBM.MVSRMHSM.*targetid*.WE110.HRecall.OA

Table 32. Resource Definitions for MAINVIEW SRM Reporting (Continued)

Resource name in SERDEF view	Resource definition and considerations
HSMMigratL1L2 - Action - HSM Migrate	Can the user enter the HSM Migrate command for HSMMigratL1L2 records? **Default Entity Name:** BBM.&PRODUCT.&CONTEXT.&INTTABLE.&INTACTION.OA **Entity Name after Substitution:** BBM.MVSRMHSM.*targetid*.WE110.HMigrate.OA
HSMMigratL1L2 - Action - HSM Delete Migrated	Can the user enter the HSM Delete Migrated command for HSMMigratL1L2 records? **Default Entity Name:** BBM.&PRODUCT.&CONTEXT.&INTTABLE.&INTACTION.OA **Entity Name after Substitution:** BBM.MVSRMHSM.*targetid*.WE110.HDelete.OA
HSMMigratL1L2 - Action - HSM Backup	Can the user enter the HSM Backup command for HSMMigratL1L2 records? **Default Entity Name:** BBM.&PRODUCT.&CONTEXT.&INTTABLE.&INTACTION.OA **Entity Name after Substitution:** BBM.MVSRMHSM.*targetid*.WE110.HBackup.OA
HSMMigratL1L2 - Action - HSM Backup Delete	Can the user enter the HSM Backup Delete command for HSMMigratL1L2 records? **Default Entity Name:** BBM.&PRODUCT.&CONTEXT.&INTTABLE.&INTACTION.OA **Entity Name after Substitution:** BBM.MVSRMHSM.*targetid*.WE110.HBDelete.OA
HSMMigratL1L2 - Action - HSM Recover	Can the user enter the HSM Recover command for HSMMigratL1L2 records? **Default Entity Name:** BBM.&PRODUCT.&CONTEXT.&INTTABLE.&INTACTION.OA **Entity Name after Substitution:** BBM.MVSRMHSM.*targetid*.WE110.Recover.OA
HSMMigratL1L2 - Action - Detailed Information	Can the user enter the Detailed Information command for HSMMigratL1L2 records? **Default Entity Name:** BBM.&PRODUCT.&CONTEXT.&INTTABLE.&INTACTION.OA **Entity Name after Substitution:** BBM.MVSRMHSM.*targetid*.WE110.Info.OA
HSMMigratL1L2 - Action - Catalog List	Can the user enter the Catalog List command for HSMMigratL1L2 records? **Default Entity Name:** BBM.&PRODUCT.&CONTEXT.&INTTABLE.&INTACTION.OA **Entity Name after Substitution:** BBM.MVSRMHSM.*targetid*.WE110.Catlist.OA
HSMOPMgmtDS - Table Data	Can the user access HSMOPMgmtDS Table Data? **Default Entity Name:** BBM.&PRODUCT.&CONTEXT.&INTTABLE.OD **Entity Name after Substitution:** BBM.MVSRMHSM.*targetid*.WE120.OD
Any Action - HSMOPMgmtDS	Can the user enter any command from HSMOPMgmtDS views? **Default Entity Name:** BBM.&PRODUCT.&CONTEXT.&INTTABLE.AO **Entity Name after Substitution:** BBM.MVSRMHSM.*targetid*.WE120.AO
HSMOPMgmtDS - Action - Delete Data Set	Can the user enter the Delete Data Set command for HSMOPMgmtDS records? **Default Entity Name:** BBM.&PRODUCT.&CONTEXT.&INTTABLE.&INTACTION.OA **Entity Name after Substitution:** BBM.MVSRMHSM.*targetid*.WE120.Deldsn.OA

Table 32. Resource Definitions for MAINVIEW SRM Reporting (Continued)

Resource name in SERDEF view	Resource definition and considerations
HSMOPMgmtML - Table Data	Can the user access HSMOPMgmtML Table Data? **Default Entity Name:** BBM.&PRODUCT.&CONTEXT.&INTTABLE.OD **Entity Name after Substitution:** BBM.MVSRMHSM.*targetid*.WE130.OD
Any Action - HSMOPMgmtML	Can the user enter any command from HSMOPMgmtML views? **Default Entity Name:** BBM.&PRODUCT.&CONTEXT.&INTTABLE.AO **Entity Name after Substitution:** BBM.MVSRMHSM.*targetid*.WE130.AO
HSMOPMgmtML - Action - Browse Member	Can the user enter the Browse Member command for HSMOPMgmtML records? **Default Entity Name:** BBM.&PRODUCT.&CONTEXT.&INTTABLE.&INTACTION.OA **Entity Name after Substitution:** BBM.MVSRMHSM.*targetid*.WE130.Browse.OA
HSMOPMgmtML - Action - Edit Member	Can the user enter the Edit Member command for HSMOPMgmtML records? **Default Entity Name:** BBM.&PRODUCT.&CONTEXT.&INTTABLE.&INTACTION.OA **Entity Name after Substitution:** BBM.MVSRMHSM.*targetid*.WE130.Edit.OA
HSMCDSQBkupDS - Table Data	Can the user access HSMCDSQBkupDS Table Data? **Default Entity Name:** BBM.&PRODUCT.&CONTEXT.&INTTABLE.OD **Entity Name after Substitution:** BBM.MVSRMHSM.*targetid*.WE140.OD
Any Action - HSMCDSQBkupDS	Can the user enter any command from HSMCDSQBkupDS views? **Default Entity Name:** BBM.&PRODUCT.&CONTEXT.&INTTABLE.AO **Entity Name after Substitution:** BBM.MVSRMHSM.*targetid*.WE140.AO
HSMCDSQBkupDS - Action - HSM Backup Delete	Can the user enter the HSM Backup Delete command for HSMCDSQBkupDS records? **Default Entity Name:** BBM.&PRODUCT.&CONTEXT.&INTTABLE.&INTACTION.OA **Entity Name after Substitution:** BBM.MVSRMHSM.*targetid*.WE140.HBDelete.OA
HSMCDSQBkupDS - Action - HSM Recover	Can the user enter the HSM Recover command for HSMCDSQBkupDS records? **Default Entity Name:** BBM.&PRODUCT.&CONTEXT.&INTTABLE.&INTACTION.OA **Entity Name after Substitution:** BBM.MVSRMHSM.*targetid*.WE140.Recover.OA
HSMBKUPVER - Table Data	Can the user access HSMBKUPVER Table Data? **Default Entity Name:** BBM.&PRODUCT.&CONTEXT.&INTTABLE.OD **Entity Name after Substitution:** BBM.MVSRMHSM.*targetid*.WE150.OD
Any Action - HSMBKUPVER	Can the user enter any command from HSMBKUPVER views? **Default Entity Name:** BBM.&PRODUCT.&CONTEXT.&INTTABLE.AO **Entity Name after Substitution:** BBM.MVSRMHSM.*targetid*.WE150.AO

Table 32. Resource Definitions for MAINVIEW SRM Reporting (Continued)

Resource name in SERDEF view	Resource definition and considerations
HSMBKUPVER - Action - HSM Backup Delete	Can the user enter the HSM Backup Delete command for HSMBKUPVER records? **Default Entity Name:** BBM.&PRODUCT.&CONTEXT.&INTTABLE.&INTACTION.OA **Entity Name after Substitution:** BBM.MVSRMHSM.*targetid*.WE150.HBDelete.OA
HSMBKUPVER - Action - HSM Recover	Can the user enter the HSM Recover command for HSMBKUPVER records? **Default Entity Name:** BBM.&PRODUCT.&CONTEXT.&INTTABLE.&INTACTION.OA **Entity Name after Substitution:** BBM.MVSRMHSM.*targetid*.WE150.Recover.OA
HSMBKUPVER4 DS - Table Data	Can the user access HSMBKUPVER4DS Table Data? **Default Entity Name:** BBM.&PRODUCT.&CONTEXT.&INTTABLE.OD **Entity Name after Substitution:** BBM.MVSRMHSM.*targetid*.WE160.OD
Any Action - HSMBKUPVER4 DS	Can the user enter any command from HSMBKUPVER4DS views? **Default Entity Name:** BBM.&PRODUCT.&CONTEXT.&INTTABLE.AO **Entity Name after Substitution:** BBM.MVSRMHSM.*targetid*.WE160.AO
HSMBKUPVER4 DS - Action - HSM Backup Delete	Can the user enter the HSM Backup Delete command for HSMBKUPVER4DS records? **Default Entity Name:** BBM.&PRODUCT.&CONTEXT.&INTTABLE.&INTACTION.OA **Entity Name after Substitution:** BBM.MVSRMHSM.*targetid*.WE160.HBDelete.OA
HSMBKUPVER4 DS - Action - HSM Recover	Can the user enter the HSM Recover command for HSMBKUPVER4DS records? **Default Entity Name:** BBM.&PRODUCT.&CONTEXT.&INTTABLE.&INTACTION.OA **Entity Name after Substitution:** BBM.MVSRMHSM.*targetid*.WE160.Recover.OA
HSMMigratDS - Table Data	Can the user access HSMMigratDS Table Data? **Default Entity Name:** BBM.&PRODUCT.&CONTEXT.&INTTABLE.OD **Entity Name after Substitution:** BBM.MVSRMHSM.*targetid*.WE170.OD
Any Action - HSMMigratDS	Can the user enter any command from HSMMigratDS views? **Default Entity Name:** BBM.&PRODUCT.&CONTEXT.&INTTABLE.AO **Entity Name after Substitution:** BBM.MVSRMHSM.*targetid*.WE170.AO
HSMMigratDS - Action - HSM Recall	Can the user enter the HSM Recall command for HSMMigratDS records? **Default Entity Name:** BBM.&PRODUCT.&CONTEXT.&INTTABLE.&INTACTION.OA **Entity Name after Substitution:** BBM.MVSRMHSM.*targetid*.WE170.HRecall.OA
HSMMigratDS - Action - HSM Migrate	Can the user enter the HSM Migrate command for HSMMigratDS records? **Default Entity Name:** BBM.&PRODUCT.&CONTEXT.&INTTABLE.&INTACTION.OA **Entity Name after Substitution:** BBM.MVSRMHSM.*targetid*.WE170.HMigrate.OA

Table 32. Resource Definitions for MAINVIEW SRM Reporting (Continued)

Resource name in SERDEF view	Resource definition and considerations
HSMMigratDS - Action - HSM Delete Migrated	Can the user enter the HSM Delete Migrated command for HSMMigratDS records? **Default Entity Name:** BBM.&PRODUCT.&CONTEXT.&INTTABLE.&INTACTION.OA **Entity Name after Substitution:** BBM.MVSRMHSM.*targetid*.WE170.HDelete.OA
HSMMigratDS - Action - Detailed Information	Can the user enter the Detailed Information command for HSMMigratDS records? **Default Entity Name:** BBM.&PRODUCT.&CONTEXT.&INTTABLE.&INTACTION.OA **Entity Name after Substitution:** BBM.MVSRMHSM.*targetid*.WE170.Info.OA
HSMOCDSDS - Table Data	Can the user access HSMOCDSDS Table Data? **Default Entity Name:** BBM.&PRODUCT.&CONTEXT.&INTTABLE.OD **Entity Name after Substitution:** BBM.MVSRMHSM.*targetid*.WE180.OD
Any Action - HSMOCDSDS	Can the user enter any command from HSMOCDSDS views? **Default Entity Name:** BBM.&PRODUCT.&CONTEXT.&INTTABLE.AO **Entity Name after Substitution:** BBM.MVSRMHSM.*targetid*.WE180.AO
HSMOCDSDS - Action - HSM Recall	Can the user enter the HSM Recall command for HSMOCDSDS records? **Default Entity Name:** BBM.&PRODUCT.&CONTEXT.&INTTABLE.&INTACTION.OA **Entity Name after Substitution:** BBM.MVSRMHSM.*targetid*.WE180.HRecall.OA
HSMOCDSDS - Action - HSM Delete Migrated	Can the user enter the HSM Delete Migrated command for HSMOCDSDS records? **Default Entity Name:** BBM.&PRODUCT.&CONTEXT.&INTTABLE.&INTACTION.OA **Entity Name after Substitution:** BBM.MVSRMHSM.*targetid*.WE180.HDelete.OA
HSMOCDSDS - Action - HSM Backup Delete	Can the user enter the HSM Backup Delete command for HSMOCDSDS records? **Default Entity Name:** BBM.&PRODUCT.&CONTEXT.&INTTABLE.&INTACTION.OA **Entity Name after Substitution:** BBM.MVSRMHSM.*targetid*.WE180.HBDelete.OA
HSMOCDSDS - Action - HSM Recover	Can the user enter the HSM Recover command for HSMOCDSDS records? **Default Entity Name:** BBM.&PRODUCT.&CONTEXT.&INTTABLE.&INTACTION.OA **Entity Name after Substitution:** BBM.MVSRMHSM.*targetid*.WE180.Recover.OA
HSMOCDSDS - Action - Detailed Information	Can the user enter the Detailed Information command for HSMOCDSDS records? **Default Entity Name:** BBM.&PRODUCT.&CONTEXT.&INTTABLE.&INTACTION.OA **Entity Name after Substitution:** BBM.MVSRMHSM.*targetid*.WE180.Info.OA
HSMOCDSVOL - Table Data	Can the user access HSMOCDSVOL Table Data? **Default Entity Name:** BBM.&PRODUCT.&CONTEXT.&INTTABLE.OD **Entity Name after Substitution:** BBM.MVSRMHSM.*targetid*.WE190.OD

Table 32. Resource Definitions for MAINVIEW SRM Reporting (Continued)

Resource name in SERDEF view	Resource definition and considerations
Any Action - HSMOCDSVOL	Can the user enter any command from HSMOCDSVOL views? **Default Entity Name:** BBM.&PRODUCT.&CONTEXT.&INTTABLE.AO **Entity Name after Substitution:** BBM.MVSRMHSM.*targetid*.WE190.AO
HSMOCDSVOL - Action - Detailed Information	Can the user enter the Detailed Information command for HSMOCDSVOL records? **Default Entity Name:** BBM.&PRODUCT.&CONTEXT.&INTTABLE.&INTACTION.OA **Entity Name after Substitution:** BBM.MVSRMHSM.*targetid*.WE190.Info.OA
HSMOCDSVOL - Action - Unassign Tape	Can the user enter the Unassign Tape command for HSMOCDSVOL records? **Default Entity Name:** BBM.&PRODUCT.&CONTEXT.&INTTABLE.&INTACTION.OA **Entity Name after Substitution:** BBM.MVSRMHSM.*targetid*.WE190.Unassign.OA
HSMOCDSVOL - Action - Recycle Tape	Can the user enter the Recycle Tape command for HSMOCDSVOL records? **Default Entity Name:** BBM.&PRODUCT.&CONTEXT.&INTTABLE.&INTACTION.OA **Entity Name after Substitution:** BBM.MVSRMHSM.*targetid*.WE190.Recycle.OA
HSMOCDSVOL - Action - Delete Tape	Can the user enter the Delete Tape command for HSMOCDSVOL records? **Default Entity Name:** BBM.&PRODUCT.&CONTEXT.&INTTABLE.&INTACTION.OA **Entity Name after Substitution:** BBM.MVSRMHSM.*targetid*.WE190.Delete.OA
HSMClusterInfo - Table Data	Can the user access HSMClusterInfo Table Data? **Default Entity Name:** BBM.&PRODUCT.&CONTEXT.&INTTABLE.OD **Entity Name after Substitution:** BBM.MVSRM.*targetid*.WE200.OD
HSMClusterInfo - Any Actions	Can the user enter any command from the HSMClusterInfo view? **Default Entity Name:** BBM.&PRODUCT.&CONTEXT.&INTTABLE.AO **Entity Name after Substitution:** BBM.MVSRM.*targetid*.WE200.AO
HSMClusterInfo – Action - DS Info	Can the user enter the DS Info command for HSMClusterInfo records? **Default Entity Name:** BBM.&PRODUCT.&CONTEXT.&INTTABLE.&INTACTION.OA **Entity Name after Substitution:** BBM.MVSRM.*targetid*.WE200.Info.OA
HSMClusterInfo – Action - Catalog List	Can the user enter the Catalog List command for HSMClusterInfo records? **Default Entity Name:** BBM.&PRODUCT.&CONTEXT.&INTTABLE.&INTACTION.OA **Entity Name after Substitution:** BBM.MVSRM.*targetid*.WE200.Catlist.OA
HSMMigratThrashD - Table Data	Can the user access HSMMigratThrashD Table Data? **Default Entity Name:** BBM.&PRODUCT.&CONTEXT.&INTTABLE.OD **Entity Name after Substitution:** BBM.MVSRMHSM.*targetid*.WE210.OD

Table 32. Resource Definitions for MAINVIEW SRM Reporting (Continued)

Resource name in SERDEF view	Resource definition and considerations
HSMMigratDSI - Table Data	Can the user access HSMMigratDSI Table Data? **Default Entity Name:** BBM.&PRODUCT.&CONTEXT.&INTTABLE.OD **Entity Name after Substitution:** BBM.MVSRMHSM.*targetid*.WE220.OD
HSMVSAMIDX - Table Data	Can the user access HSMVSAMIDX Table Data? **Default Entity Name:** BBM.&PRODUCT.&CONTEXT.&INTTABLE.OD **Entity Name after Substitution:** BBM.MVSRM.*targetid*.WE230.OD
HSMVSAMDATAC - Table Data	Can the user access HSMVSAMDATAC Table Data? **Default Entity Name:** BBM.&PRODUCT.&CONTEXT.&INTTABLE.OD **Entity Name after Substitution:** BBM.MVSRM.*targetid*.WE240.OD
HSMNVSAMDSI - Table Data	Can the user access HSMNVSAMDSI Table Data? **Default Entity Name:** BBM.&PRODUCT.&CONTEXT.&INTTABLE.OD **Entity Name after Substitution:** BBM.MVSRM.*targetid*.WE250.OD
GPCNFG - Table Data	Can the user access GPCNFG Table Data? **Default Entity Name:** BBM.&PRODUCT.&CONTEXT.&INTTABLE.OD **Entity Name after Substitution:** BBM.MVSRM.*targetid*.WK010.OD
SSCNFG - Table Data	Can the user access SSCNFG Table Data? **Default Entity Name:** BBM.&PRODUCT.&CONTEXT.&INTTABLE.OD **Entity Name after Substitution:** BBM.MVSRM.*targetid*.WK020.OD
VOLCNFG - Table Data	Can the user access VOLCNFG Table Data? **Default Entity Name:** BBM.&PRODUCT.&CONTEXT.&INTTABLE.OD **Entity Name after Substitution:** BBM.MVSRM.*targetid*.WK030.OD
VOLCNFG - Any Actions	Can the user enter any command from the VOLCNFG view? **Default Entity Name:** BBM.&PRODUCT.&CONTEXT.&INTTABLE.AO **Entity Name after Substitution:** BBM.MVSRM.*targetid*.WK030.AO
VOLCNFG – Action - Volume Configuration	Can the user enter the Volume Configuration command for VOLCNFG records? **Default Entity Name:** BBM.&PRODUCT.&CONTEXT.&INTTABLE.&INTACTION.OA **Entity Name after Substitution:** BBM.MVSRM.*targetid*.WK030.Volinfo.OA
BOXCNFG - Table Data	Can the user access BOXCNFG Table Data? **Default Entity Name:** BBM.&PRODUCT.&CONTEXT.&INTTABLE.OD **Entity Name after Substitution:** BBM.MVSRM.*targetid*.WK040.OD

Table 32. Resource Definitions for MAINVIEW SRM Reporting (Continued)

Resource name in SERDEF view	Resource definition and considerations
PHYCNFG - Table Data	Can the user access PHYCNFG Table Data? **Default Entity Name:** BBM.&PRODUCT.&CONTEXT.&INTTABLE.OD **Entity Name after Substitution:** BBM.MVSRM.*targetid*.WK050.OD
LogRecord - Table Data	Can the user access LogRecord Table Data? **Default Entity Name:** BBM.&PRODUCT.&CONTEXT.&INTTABLE.OD **Entity Name after Substitution:** BBM.MVSRM.*targetid*.WL020.OD
LogDD - Table Data	Can the user access LogDD Table Data? **Default Entity Name:** BBM.&PRODUCT.&CONTEXT.&INTTABLE.OD **Entity Name after Substitution:** BBM.MVSRM.*targetid*.WL030.OD
MONVOLSPACE - Table Data	Can the user access MONVOLSPACE Table Data? **Default Entity Name:** BBM.&PRODUCT.&CONTEXT.&INTTABLE.OD **Entity Name after Substitution:** BBM.MVSRM.*targetid*.WM040.OD
MONVOLPAVP - Table Data	Can the user access MONVOLPAVP Table Data? **Default Entity Name:** BBM.&PRODUCT.&CONTEXT.&INTTABLE.OD **Entity Name after Substitution:** BBM.MVSRM.*targetid*.WM080.OD
MONVOLCACHE - Table Data	Can the user access MONVOLCACHE Table Data? **Default Entity Name:** BBM.&PRODUCT.&CONTEXT.&INTTABLE.OD **Entity Name after Substitution:** BBM.MVSRM.*targetid*.WM100.OD
MONDEV – Table Data	Can the user access MONDEV Table Data? **Default Entity Name:** BBM.&PRODUCT.&CONTEXT.&INTTABLE.OD **Entity Name after Substitution:** BBM.MVSRM.*targetid*.WM110.OD
MONDEVSP - Table Data	Can the user access MONDEVSP Table Data? **Default Entity Name:** BBM.&PRODUCT.&CONTEXT.&INTTABLE.OD **Entity Name after Substitution:** BBM.MVSRM.*targetid*.WM120.OD
MONCHAN - Table Data	Can the user access MONCHAN Table Data? **Default Entity Name:** BBM.&PRODUCT.&CONTEXT.&INTTABLE.OD **Entity Name after Substitution:** BBM.MVSRM.*targetid*.WM130.OD
MONIOQ - Table Data	Can the user access MONIOQ Table Data? **Default Entity Name:** BBM.&PRODUCT.&CONTEXT.&INTTABLE.OD **Entity Name after Substitution:** BBM.MVSRM.*targetid*.WM140.OD

Table 32. Resource Definitions for MAINVIEW SRM Reporting (Continued)

Resource name in SERDEF view	Resource definition and considerations
MONENQRES - Table Data	Can the user access MONENQRES Table Data? **Default Entity Name:** BBM.&PRODUCT.&CONTEXT.&INTTABLE.OD **Entity Name after Substitution:** BBM.MVSRM.*targetid*.WM150.OD
MONENQ - Table Data	Can the user access MONENQ Table Data? **Default Entity Name:** BBM.&PRODUCT.&CONTEXT.&INTTABLE.OD **Entity Name after Substitution:** BBM.MVSRM.*targetid*.WM160.OD
EVENTSTAT - Table Data	Can the user access EVENTSTAT Table Data? **Default Entity Name:** BBM.&PRODUCT.&CONTEXT.&INTTABLE.OD **Entity Name after Substitution:** BBM.MVSRM.*targetid*.WM200.OD
AUTOSTAT - Table Data	Can the user access AUTOSTAT Table Data? **Default Entity Name:** BBM.&PRODUCT.&CONTEXT.&INTTABLE.OD **Entity Name after Substitution:** BBM.MVSRM.*targetid*.WM210.OD
SGPInterval - Table Data	Can the user access SGPInterval Table Data? **Default Entity Name:** BBM.&PRODUCT.&CONTEXT.&INTTABLE.OD **Entity Name after Substitution:** BBM.MVSRMSGP.*targetid*.WP010.OD
SGPSystemSummary- Table Data	Can the user access SGPSystemSummary Table Data? **Default Entity Name:** BBM.&PRODUCT.&CONTEXT.&INTTABLE.OD **Entity Name after Substitution:** BBM.MVSRMSGP.*targetid*.WP020.OD
SGPChannelPath - Table Data	Can the user access SGPChannelPath Data? **Default Entity Name:** BBM.&PRODUCT.&CONTEXT.&INTTABLE.OD **Entity Name after Substitution:** BBM.MVSRMSGP.*targetid*.WP030.OD
SGPCacheCntUnt - Table Data	Can the user access SGPCacheCntUntTable Data? **Default Entity Name:** BBM.&PRODUCT.&CONTEXT.&INTTABLE.OD **Entity Name after Substitution:** BBM.MVSRMSGP.*targetid*.WP040.OD
SGPLogicalCntUnt - Table Data	Can the user access SGPLogicalCntUnt Table Data? **Default Entity Name:** BBM.&PRODUCT.&CONTEXT.&INTTABLE.OD **Entity Name after Substitution:** BBM.MVSRMSGP.*targetid*.WP050.OD
SGPVolume - Table Data	Can the user access SGPVolume Table Data? **Default Entity Name:** BBM.&PRODUCT.&CONTEXT.&INTTABLE.OD **Entity Name after Substitution:** BBM.MVSRMSGP.*targetid*.WP060.OD

Table 32. Resource Definitions for MAINVIEW SRM Reporting (Continued)

Resource name in SERDEF view	Resource definition and considerations
SGPPool - Table Data	Can the user access SGPPool Table Data? **Default Entity Name:** BBM.&PRODUCT.&CONTEXT.&INTTABLE.OD **Entity Name after Substitution:** BBM.MVSRMSGP.*targetid*.WP070.OD
SGPStorageClass - Table Data	Can the user access SGPStorageClass Table Data? **Default Entity Name:** BBM.&PRODUCT.&CONTEXT.&INTTABLE.OD **Entity Name after Substitution:** BBM.MVSRMSGP.*targetid*.WP080.OD
SGPDataSet - Table Data	Can the user access SGPDataSet Table Data? **Default Entity Name:** BBM.&PRODUCT.&CONTEXT.&INTTABLE.OD **Entity Name after Substitution:** BBM.MVSRMSGP.*targetid*.WP090.OD
SGPJob - Table Data	Can the user access SGPJob Table Data? **Default Entity Name:** BBM.&PRODUCT.&CONTEXT.&INTTABLE.OD **Entity Name after Substitution:** BBM.MVSRMSGP.*targetid*.WP100.OD
SGPRaidDirector - Table Data	Can the user access SGPRaidDirector Table Data? **Default Entity Name:** BBM.&PRODUCT.&CONTEXT.&INTTABLE.OD **Entity Name after Substitution:** BBM.MVSRMSGP.*targetid*.WP110.OD
SGPRaidPhyVolume - Table Data	Can the user access SGPRaidPhyVolume Table Data? **Default Entity Name:** BBM.&PRODUCT.&CONTEXT.&INTTABLE.OD **Entity Name after Substitution:** BBM.MVSRMSGP.*targetid*.WP120.OD
SGPRVASSFrame - Table Data	Can the user access SGPRVASSFrame Table Data? **Default Entity Name:** BBM.&PRODUCT.&CONTEXT.&INTTABLE.OD **Entity Name after Substitution:** BBM.MVSRMSGP.*targetid*.WP130.OD
SGPRaidRank - Table Data	Can the user access SGPRaidRank Table Data? **Default Entity Name:** BBM.&PRODUCT.&CONTEXT.&INTTABLE.OD **Entity Name after Substitution:** BBM.MVSRMSGP.*targetid*.WP140.OD
SETSRMDisp - Table Data	Can the user access SETSRMDisp Table Data? **Default Entity Name:** BBM.&PRODUCT.&CONTEXT.&INTTABLE.OD **Entity Name after Substitution:** BBM.MVSRM.*targetid*.WQ010.OD
RAIDEMCDEV - Table Data	Can the user access RAIDEMCDEV Table Data? **Default Entity Name:** BBM.&PRODUCT.&CONTEXT.&INTTABLE.OD **Entity Name after Substitution:** BBM.MVSRM.*targetid*.WR030.OD

Table 32. Resource Definitions for MAINVIEW SRM Reporting (Continued)

Resource name in SERDEF view	Resource definition and considerations
RAIDEMCDIR - Table Data	Can the user access RAIDEMCDIR Table Data? **Default Entity Name:** BBM.&PRODUCT.&CONTEXT.&INTTABLE.OD **Entity Name after Substitution:** BBM.MVSRM.*targetid*.WR050.OD
RAIDEMCSRDF DEV - Table Data	Can the user access RAIDEMCSRDFDEV Table Data? **Default Entity Name:** BBM.&PRODUCT.&CONTEXT.&INTTABLE.OD **Entity Name after Substitution:** BBM.MVSRM.*targetid*.WR070.OD
SpaceSnap - Table Data	Can the user access SpaceSnap Table Data? **Default Entity Name:** BBM.&PRODUCT.&CONTEXT.&INTTABLE.OD **Entity Name after Substitution:** BBM.MVSRMSGD.*targetid*.WS010.OD
SpacePoolSnap - Table Data	Can the user access SpacePoolSnap Table Data? **Default Entity Name:** BBM.&PRODUCT.&CONTEXT.&INTTABLE.OD **Entity Name after Substitution:** BBM.MVSRMSGD.*targetid*.WS030.OD
SpaceVolSnap - Table Data	Can the user access SpaceVolSnap Table Data? **Default Entity Name:** BBM.&PRODUCT.&CONTEXT.&INTTABLE.OD **Entity Name after Substitution:** BBM.MVSRMSGD.*targetid*.WS060.OD
SpaceAcctSnap - Table Data	Can the user access SpaceAcctSnap Table Data? **Default Entity Name:** BBM.&PRODUCT.&CONTEXT.&INTTABLE.OD **Entity Name after Substitution:** BBM.MVSRMSGD.*targetid*.WS090.OD
SpaceRaidSnap - Table Data	Can the user access SpaceRaidSnap Table Data? **Default Entity Name:** BBM.&PRODUCT.&CONTEXT.&INTTABLE.OD **Entity Name after Substitution:** BBM.MVSRMSGD.*targetid*.WS120.OD
SpaceRaidVol - Table Data	Can the user access SpaceRaidVol Table Data? **Default Entity Name:** BBM.&PRODUCT.&CONTEXT.&INTTABLE.OD **Entity Name after Substitution:** BBM.MVSRMSGD.*targetid*.WS130.OD
TapeLibSums - Table Data	Can the user access TapeLibSums Table Data? **Default Entity Name:** BBM.&PRODUCT.&CONTEXT.&INTTABLE.OD **Entity Name after Substitution:** BBM.MVSRM.*targetid*.WT010.OD
TAPESCANOLDS - Table Data	Can the user access TAPESCANOLDS Table Data? **Default Entity Name:** BBM.&PRODUCT.&CONTEXT.&INTTABLE.OD **Entity Name after Substitution:** BBM.MVSRM.*targetid*.WT020.OD

Table 32. Resource Definitions for MAINVIEW SRM Reporting (Continued)

Resource name in SERDEF view	Resource definition and considerations
TAPESCANOLDS - Any Action	Can the user enter any command from the TAPESCANOLDS view? **Default Entity Name:** BBM.&PRODUCT.&CONTEXT.&INTTABLE.AO **Entity Name after Substitution:** BBM.MVSRM.*targetid*.WT020.AO
TAPESCANOLDS - Action - Perform a Tape Scan	Can the user enter the Perform a Tape Scan command for TAPESCANOLDS records? **Default Entity Name:** BBM.&PRODUCT.&CONTEXT.&INTTABLE.&INTACTION.OA **Entity Name after Substitution:** BBM.MVSRM.*targetid*.WT020.Tscan.OA
TAPESCANOLDS - Action - End a Tape Scan	Can the user enter the End a Tape Scan command for TAPESCANOLDS records? **Default Entity Name:** BBM.&PRODUCT.&CONTEXT.&INTTABLE.&INTACTION.OA **Entity Name after Substitution:** BBM.MVSRM.*targetid*.WT020.Endtscan.OA
TapeVolDSN - Table Data	Can the user access TapeVolDSN Table Data? **Default Entity Name:** BBM.&PRODUCT.&CONTEXT.&INTTABLE.OD **Entity Name after Substitution:** BBM.MVSRM.*targetid*.WT030.OD
StackedVol - Table Data	Can the user access StackedVol Table Data? **Default Entity Name:** BBM.&PRODUCT.&CONTEXT.&INTTABLE.OD **Entity Name after Substitution:** BBM.MVSRM.*targetid*.WT040.OD
VolDetail - Table Data	Can the user access VolDetail Table Data? **Default Entity Name:** BBM.&PRODUCT.&CONTEXT.&INTTABLE.OD **Entity Name after Substitution:** BBM.MVSRM.*targetid*.WT050.OD
AgeVolume - Table Data	Can the user access AgeVolume Table Data? **Default Entity Name:** BBM.&PRODUCT.&CONTEXT.&INTTABLE.OD **Entity Name after Substitution:** BBM.MVSRM.*targetid*.WT060.OD
ChainedVol – Table Data	Can the user access ChainedVol Table Data? **Default Entity Name:** BBM.&PRODUCT.&CONTEXT.&INTTABLE.OD **Entity Name after Substitution:** BBM.MVSRM.*targetid*.WT070.OD
AgeSelect - Table Data	Can the user access AgeSelect Table Data? **Default Entity Name:** BBM.&PRODUCT.&CONTEXT.&INTTABLE.OD **Entity Name after Substitution:** BBM.MVSRM.*targetid*.WT080.OD
AgeSelect - Any Action	Can the user enter any command from the AgeSelect view? **Default Entity Name:** BBM.&PRODUCT.&CONTEXT.&INTTABLE.AO **Entity Name after Substitution:** BBM.MVSRM.*targetid*.WT080.AO

Table 32. Resource Definitions for MAINVIEW SRM Reporting (Continued)

Resource name in SERDEF view	Resource definition and considerations
AgeSelect - Action - Volume Data Entry	Can the user enter the Volume Data Entry command for AgeSelect records? **Default Entity Name:** BBM.&PRODUCT.&CONTEXT.&INTTABLE.&INTACTION.OA **Entity Name after Substitution:** BBM.MVSRM.*targetid*.WT080.DataEnt.OA
CartAging - Table Data	Can the user access CartAging Table Data? **Default Entity Name:** BBM.&PRODUCT.&CONTEXT.&INTTABLE.OD **Entity Name after Substitution:** BBM.MVSRM.*targetid*.WT090.OD
TAPESLR - Table Data	Can the user access TAPESLR Table Data? **Default Entity Name:** BBM.&PRODUCT.&CONTEXT.&INTTABLE.OD **Entity Name after Substitution:** BBM.MVSRM.*targetid*.WT100.OD
VolSelect - Table Data	Can the user access VolSelect Table Data? **Default Entity Name:** BBM.&PRODUCT.&CONTEXT.&INTTABLE.OD **Entity Name after Substitution:** BBM.MVSRM.*targetid*.WT110.OD
VolSelect - Any Action	Can the user enter any command from the VolSelect view? **Default Entity Name:** BBM.&PRODUCT.&CONTEXT.&INTTABLE.AO **Entity Name after Substitution:** BBM.MVSRM.*targetid*.WT110.AO
VolSelect - Action - Volume Data Entry	Can the user enter the Volume Data Entry command for VolSelect records? **Default Entity Name:** BBM.&PRODUCT.&CONTEXT.&INTTABLE.&INTACTION.OA **Entity Name after Substitution:** BBM.MVSRM.*targetid*.WT110.DataEnt.OA
TVOLUMESUM - Table Data	Can the user access TVOLUMESUM Table Data? **Default Entity Name:** BBM.&PRODUCT.&CONTEXT.&INTTABLE.OD **Entity Name after Substitution:** BBM.MVSRM.*targetid*.WT120.OD
LibraryAge - Table Data	Can the user access LibraryAge Table Data? **Default Entity Name:** BBM.&PRODUCT.&CONTEXT.&INTTABLE.OD **Entity Name after Substitution:** BBM.MVSRM.*targetid*.WT130.OD
TapeApplSums - Table Data	Can the user access TapeApplSums Table Data? **Default Entity Name:** BBM.&PRODUCT.&CONTEXT.&INTTABLE.OD **Entity Name after Substitution:** BBM.MVSRM.*targetid*.WT140.OD
VolSequence - Table Data	Can the user access VolSequence Table Data? **Default Entity Name:** BBM.&PRODUCT.&CONTEXT.&INTTABLE.OD **Entity Name after Substitution:** BBM.MVSRM.*targetid*.WT150.OD

Table 32. Resource Definitions for MAINVIEW SRM Reporting (Continued)

Resource name in SERDEF view	Resource definition and considerations
TAPESLRV - Table Data	Can the user access TAPESLRV Table Data? **Default Entity Name:** BBM.&PRODUCT.&CONTEXT.&INTTABLE.OD **Entity Name after Substitution:** BBM.MVSRM.*targetid*.WT160.OD
TapeSMF - Table Data	Can the user access TapeSMF Table Data? **Default Entity Name:** BBM.&PRODUCT.&CONTEXT.&INTTABLE.OD **Entity Name after Substitution:** BBM.MVSRM.*targetid*.WT170.OD
TAPEAUDIT - Table Data	Can the user access TAPEAUDIT Table Data? **Default Entity Name:** BBM.&PRODUCT.&CONTEXT.&INTTABLE.OD **Entity Name after Substitution:** BBM.MVSRM.*targetid*.WT180.OD
LibrarySum - Table Data	Can the user access LibrarySum Table Data? **Default Entity Name:** BBM.&PRODUCT.&CONTEXT.&INTTABLE.OD **Entity Name after Substitution:** BBM.MVSRM.*targetid*.WT190.OD
TUTILIZAT - Table Data	Can the user access TUTILIZAT Table Data? **Default Entity Name:** BBM.&PRODUCT.&CONTEXT.&INTTABLE.OD **Entity Name after Substitution:** BBM.MVSRM.*targetid*.WT200.OD
TAPETSAR1F - Table Data	Can the user access TAPETSAR1F Table Data? **Default Entity Name:** BBM.&PRODUCT.&CONTEXT.&INTTABLE.OD **Entity Name after Substitution:** BBM.MVSRM.*targetid*.WT210.OD
TAPETSAR1F - Any Action	Can the user enter any command from the TAPETSAR1F view? **Default Entity Name:** BBM.&PRODUCT.&CONTEXT.&INTTABLE.AO **Entity Name after Substitution:** BBM.MVSRM.*targetid*.WT210.AO
TAPETSAR1F - Action - Volume Data Entry	Can the user enter the Volume Data Entry command for TAPETSAR1F records? **Default Entity Name:** BBM.&PRODUCT.&CONTEXT.&INTTABLE.&INTACTION.OA **Entity Name after Substitution:** BBM.MVSRM.*targetid*.WT210.DataEnt.OA
TAPETSAR2F - Table Data	Can the user access TAPETSAR2F Table Data? **Default Entity Name:** BBM.&PRODUCT.&CONTEXT.&INTTABLE.OD **Entity Name after Substitution:** BBM.MVSRM.*targetid*.WT220.OD
TAPETSAR2F - Any Action	Can the user enter any command from the TAPETSAR2F view? **Default Entity Name:** BBM.&PRODUCT.&CONTEXT.&INTTABLE.AO **Entity Name after Substitution:** BBM.MVSRM.*targetid*.WT220.AO

Table 32. Resource Definitions for MAINVIEW SRM Reporting (Continued)

Resource name in SERDEF view	Resource definition and considerations
TAPETSAR2F - Action - Volume Data Entry	Can the user enter the Volume Data Entry command for TAPETSAR2F records? **Default Entity Name:** BBM.&PRODUCT.&CONTEXT.&INTTABLE.&INTACTION.OA **Entity Name after Substitution:** BBM.MVSRM.*targetid*.WT220.DataEnt.OA
TAPETSLRV1F - Table Data	Can the user access TAPETSLRV1F Table Data? **Default Entity Name:** BBM.&PRODUCT.&CONTEXT.&INTTABLE.OD **Entity Name after Substitution:** BBM.MVSRM.*targetid*.WT230.OD
TAPETSLRV1F - Any Action	Can the user enter any command from the TAPETSLRV1F view? **Default Entity Name:** BBM.&PRODUCT.&CONTEXT.&INTTABLE.AO **Entity Name after Substitution:** BBM.MVSRM.*targetid*.WT230.AO
TAPETSLRV1F - Action - Volume Data Entry	Can the user enter the Volume Data Entry command for TAPETSLRV1F records? **Default Entity Name:** BBM.&PRODUCT.&CONTEXT.&INTTABLE.&INTACTION.OA **Entity Name after Substitution:** BBM.MVSRM.*targetid*.WT230.DataEnt.OA
TAPEAUDIT2 - Table Data	Can the user access TAPEAUDIT2 Table Data? **Default Entity Name:** BBM.&PRODUCT.&CONTEXT.&INTTABLE.OD **Entity Name after Substitution:** BBM.MVSRM.*targetid*.WT240.OD
TapeMigr - Table Data	Can the user access TapeMigr Table Data? **Default Entity Name:** BBM.&PRODUCT.&CONTEXT.&INTTABLE.OD **Entity Name after Substitution:** BBM.MVSRM.*targetid*.WT250.OD
LibraryClean - Table Data	Can the user access LibraryClean Table Data? **Default Entity Name:** BBM.&PRODUCT.&CONTEXT.&INTTABLE.OD **Entity Name after Substitution:** BBM.MVSRM.*targetid*.WT260.OD
TapeVolFilt - Table Data	Can the user access TapeVolFilt Table Data? **Default Entity Name:** BBM.&PRODUCT.&CONTEXT.&INTTABLE.OD **Entity Name after Substitution:** BBM.MVSRM.*targetid*.WT270.OD
TapeVolFilt - Any Action	Can the user enter any command from the TapeVolFilt view? **Default Entity Name:** BBM.&PRODUCT.&CONTEXT.&INTTABLE.AO **Entity Name after Substitution:** BBM.MVSRM.*targetid*.WT270.AO
TapeVolFilt - Action - Volume Selection A	Can the user enter the Volume Selection A command for TapeVolFilt records? **Default Entity Name:** BBM.&PRODUCT.&CONTEXT.&INTTABLE.&INTACTION.OA **Entity Name after Substitution:** BBM.MVSRM.*targetid*.WT270.SelA.OA

Table 32. Resource Definitions for MAINVIEW SRM Reporting (Continued)

Resource name in SERDEF view	Resource definition and considerations
TapeVolFilt - Action - Volume Selection B	Can the user enter the Volume Selection B command for TapeVolFilt records? **Default Entity Name:** BBM.&PRODUCT.&CONTEXT.&INTTABLE.&INTACTION.OA **Entity Name after Substitution:** BBM.MVSRM.*targetid*.WT270.SelB.OA
LibSelect - Table Data	Can the user access LibSelect Table Data? **Default Entity Name:** BBM.&PRODUCT.&CONTEXT.&INTTABLE.OD **Entity Name after Substitution:** BBM.MVSRM.*targetid*.WT280.OD
LibSelect - Any Action	Can the user enter any command from the LibSelect view? **Default Entity Name:** BBM.&PRODUCT.&CONTEXT.&INTTABLE.AO **Entity Name after Substitution:** BBM.MVSRM.*targetid*.WT280.AO
LibSelect - Action - Volume Data Entry	Can the user enter the Volume Data Entry command for LibSelect records? **Default Entity Name:** BBM.&PRODUCT.&CONTEXT.&INTTABLE.&INTACTION.OA **Entity Name after Substitution:** BBM.MVSRM.*targetid*.WT280.DataEnt.OA
LibVolume - Table Data	Can the user access LibVolume Table Data? **Default Entity Name:** BBM.&PRODUCT.&CONTEXT.&INTTABLE.OD **Entity Name after Substitution:** BBM.MVSRM.*targetid*.WT290.OD
CATALOGLIST - Table Data	Can the user access CATALOGLIST Table Data? **Default Entity Name:** BBM.&PRODUCT.&CONTEXT.&INTTABLE.OD **Entity Name after Substitution:** BBM.MVSRM.*targetid*.WW040.OD
ABOUT - Table Data	Can the user access ABOUT Table Data? **Default Entity Name:** BBM.&PRODUCT.&CONTEXT.&INTTABLE.OD **Entity Name after Substitution:** BBM.MVSRM.*targetid*.WW050.OD
WBHLQDATA - Table Data	Can the user access WBHLQDATA Table Data? **Default Entity Name:** BBM.&PRODUCT.&CONTEXT.&INTTABLE.OD **Entity Name after Substitution:** BBM.MVSRM.*targetid*.WW110.OD
WBHLQDATA - Any Action	Can the user enter any command from the WBHLQDATA view? **Default Entity Name:** BBM.&PRODUCT.&CONTEXT.&INTTABLE.AO **Entity Name after Substitution:** BBM.MVSRM.*targetid*.WW110.AO
WBHLQDATA - Action - HLQ Data Entry	Can the user enter the HLQ Data Entry command for WBHLQDATA records? **Default Entity Name:** BBM.&PRODUCT.&CONTEXT.&INTTABLE.&INTACTION.OA **Entity Name after Substitution:** BBM.MVSRM.*targetid*.WW110.DataEnt.OA

Table 32. Resource Definitions for MAINVIEW SRM Reporting (Continued)

Resource name in SERDEF view	Resource definition and considerations
WBSLDATA - Table Data	Can the user access WBSLDATA Table Data? **Default Entity Name:** BBM.&PRODUCT.&CONTEXT.&INTTABLE.OD **Entity Name after Substitution:** BBM.MVSRM.*targetid*.WW120.OD
WBSLDATA - Any Action	Can the user enter any command from the WBSLDATA view? **Default Entity Name:** BBM.&PRODUCT.&CONTEXT.&INTTABLE.AO **Entity Name after Substitution:** BBM.MVSRM.*targetid*.WW120.AO
WBSLDATA - Action - Catalog Superlocate Selection	Can the user enter the Catalog Superlocate Selection command for WBSLDATA records? **Default Entity Name:** BBM.&PRODUCT.&CONTEXT.&INTTABLE.&INTACTION.OA **Entity Name after Substitution:** BBM.MVSRM.*targetid*.WW120.Select.OA
WBVTOCSUMM - Table Data	Can the user access WBVTOCSUMM Table Data? **Default Entity Name:** BBM.&PRODUCT.&CONTEXT.&INTTABLE.OD **Entity Name after Substitution:** BBM.MVSRM.*targetid*.WW240.OD
EZVOLMENU - Table Data	Can the user access EZVOLMENU Table Data? **Default Entity Name:** BBM.&PRODUCT.&CONTEXT.&INTTABLE.OD **Entity Name after Substitution:** BBM.MVSRM.*targetid*.WZ010.OD
EZVOLMENU - Any Action	Can the user enter any command from the EZVOLMENU view? **Default Entity Name:** BBM.&PRODUCT.&CONTEXT.&INTTABLE.AO **Entity Name after Substitution:** BBM.MVSRM.*targetid*.WZ010.AO
EZVOLMENU - Action - Volume Information	Can the user enter the Volume Information command for EZVOLMENU records? **Default Entity Name:** BBM.&PRODUCT.&CONTEXT.&INTTABLE.&INTACTION.OA **Entity Name after Substitution:** BBM.MVSRM.*targetid*.WZ010.Volinfo.OA
EZSSMENU - Table Data	Can the user access EZSSMENU Table Data? **Default Entity Name:** BBM.&PRODUCT.&CONTEXT.&INTTABLE.OD **Entity Name after Substitution:** BBM.MVSRM.*targetid*.WZ020.OD
EZPOOLMENU - Table Data	Can the user access EZPOOLMENU Table Data? **Default Entity Name:** BBM.&PRODUCT.&CONTEXT.&INTTABLE.OD **Entity Name after Substitution:** BBM.MVSRM.*targetid*.WZ030.OD
EZPOOLMENU - Any Action	Can the user enter any command from the EZPOOLMENU view? **Default Entity Name:** BBM.&PRODUCT.&CONTEXT.&INTTABLE.AO **Entity Name after Substitution:** BBM.MVSRM.*targetid*.WZ030.AO

Table 32. Resource Definitions for MAINVIEW SRM Reporting (Continued)

Resource name in SERDEF view	Resource definition and considerations
EZPOOLMENU - Action - Display Pool Definition	Can the user enter the Display Pool Definition command for EZPOOLMENU records? **Default Entity Name:** BBM.&PRODUCT.&CONTEXT.&INTTABLE.&INTACTION.OA **Entity Name after Substitution:** BBM.MVSRM.*targetid*.WZ030.Display.OA
EZDSMENU - Table Data	Can the user access EZDSMENU Table Data? **Default Entity Name:** BBM.&PRODUCT.&CONTEXT.&INTTABLE.OD **Entity Name after Substitution:** BBM.MVSRM.*targetid*.WZ040.OD
EZDSMENU - Any Action	Can the user enter any command from the EZDSMENU view? **Default Entity Name:** BBM.&PRODUCT.&CONTEXT.&INTTABLE.AO **Entity Name after Substitution:** BBM.MVSRM.*targetid*.WZ040.AO
EZDSMENU - Action - Display Catalog Entry List	Can the user enter the Display Catalog Entry List command for EZDSMENU records? **Default Entity Name:** BBM.&PRODUCT.&CONTEXT.&INTTABLE.&INTACTION.OA **Entity Name after Substitution:** BBM.MVSRM.*targetid*.WZ040.Catlist.OA
EZDSMENU - Action - Free Data Set	Can the user enter the Free Data Set command for EZDSMENU records? **Default Entity Name:** BBM.&PRODUCT.&CONTEXT.&INTTABLE.&INTACTION.OA **Entity Name after Substitution:** BBM.MVSRM.*targetid*.WZ040.Free.OA
EZDSMENU - Action - Data Set Information	Can the user enter the Data Set Information command for EZDSMENU records? **Default Entity Name:** BBM.&PRODUCT.&CONTEXT.&INTTABLE.&INTACTION.OA **Entity Name after Substitution:** BBM.MVSRM.*targetid*.WZ040.Info.OA
EZDSMENU - Action - Data Set Uncatalog	Can the user enter the Data Set Uncatalog command for EZDSMENU records? **Default Entity Name:** BBM.&PRODUCT.&CONTEXT.&INTTABLE.&INTACTION.OA **Entity Name after Substitution:** BBM.MVSRM.*targetid*.WZ040.Uncatlg.OA
EZDSMENU - Action - VTOC Listing	Can the user enter the VTOC Listing command for EZDSMENU records? **Default Entity Name:** BBM.&PRODUCT.&CONTEXT.&INTTABLE.&INTACTION.OA **Entity Name after Substitution:** BBM.MVSRM.*targetid*.WZ040.Vtoclist.OA
EZDSMENU - Action - Volume Information	Can the user enter the Volume Information command for EZDSMENU records? **Default Entity Name:** BBM.&PRODUCT.&CONTEXT.&INTTABLE.&INTACTION.OA **Entity Name after Substitution:** BBM.MVSRM.*targetid*.WZ040.Volinfo.OA
EZDSMENU - Action - Data Set Compress	Can the user enter the Data Set Compress command for EZDSMENU records? **Default Entity Name:** BBM.&PRODUCT.&CONTEXT.&INTTABLE.&INTACTION.OA **Entity Name after Substitution:** BBM.MVSRM.*targetid*.WZ040.Compress.OA

Table 32. Resource Definitions for MAINVIEW SRM Reporting (Continued)

Resource name in SERDEF view	Resource definition and considerations
EZDSMENU - Action - Data Set Edit	Can the user enter the Data Set Edit command for EZDSMENU records? **Default Entity Name:** BBM.&PRODUCT.&CONTEXT.&INTTABLE.&INTACTION.OA **Entity Name after Substitution:** BBM.MVSRM.*targetid*.WZ040.Edit.OA
EZDSMENU - Action - Data Set Browse	Can the user enter the Data Set Browse command for EZDSMENU records? **Default Entity Name:** BBM.&PRODUCT.&CONTEXT.&INTTABLE.&INTACTION.OA **Entity Name after Substitution:** BBM.MVSRM.*targetid*.WZ040.Browse.OA
EZDSMENU - Action - HSM Backup	Can the user enter the HSM Backup command for EZDSMENU records? **Default Entity Name:** BBM.&PRODUCT.&CONTEXT.&INTTABLE.&INTACTION.OA **Entity Name after Substitution:** BBM.MVSRM.*targetid*.WZ040.HBackup.OA
EZDSMENU - Action - HSM Backup Delete	Can the user enter the HSM Backup Delete command for EZDSMENU records? **Default Entity Name:** BBM.&PRODUCT.&CONTEXT.&INTTABLE.&INTACTION.OA **Entity Name after Substitution:** BBM.MVSRM.*targetid*.WZ040.HBDelete.OA
EZDSMENU - Action - HSM Migrate	Can the user enter the HSM Migrate command for EZDSMENU records? **Default Entity Name:** BBM.&PRODUCT.&CONTEXT.&INTTABLE.&INTACTION.OA **Entity Name after Substitution:** BBM.MVSRM.*targetid*.WZ040.HMigrate.OA
EZDSMENU - Action - HSM Recover	Can the user enter the HSM Recover command for EZDSMENU records? **Default Entity Name:** BBM.&PRODUCT.&CONTEXT.&INTTABLE.&INTACTION.OA **Entity Name after Substitution:** BBM.MVSRM.*targetid*.WZ040.Recover.OA
EZDSMENU - Action - HSM Recall	Can the user enter the HSM Recall command for EZDSMENU records? **Default Entity Name:** BBM.&PRODUCT.&CONTEXT.&INTTABLE.&INTACTION.OA **Entity Name after Substitution:** BBM.MVSRM.*targetid*.WZ040.HRecall.OA
EZDSMENU - Action - Data Set Delete	Can the user enter the Data Set Delete command for EZDSMENU records? **Default Entity Name:** BBM.&PRODUCT.&CONTEXT.&INTTABLE.&INTACTION.OA **Entity Name after Substitution:** BBM.MVSRM.*targetid*.WZ040.Deldsn.OA
EZVOLAMENU - Table Data	Can the user access EZVOLAMENU Table Data? **Default Entity Name:** BBM.&PRODUCT.&CONTEXT.&INTTABLE.OD **Entity Name after Substitution:** BBM.MVSRM.*targetid*.WZ050.OD

Table 32. Resource Definitions for MAINVIEW SRM Reporting (Continued)

Resource name in SERDEF view	Resource definition and considerations
EZPHYMENU - Table Data	Can the user access EZPHYMENU Table Data? **Default Entity Name:** BBM.&PRODUCT.&CONTEXT.&INTTABLE.OD **Entity Name after Substitution:** BBM.MVSRM.*targetid*.WZ060.OD
EZBOXMENU - Table Data	Can the user access EZBOXMENU Table Data? **Default Entity Name:** BBM.&PRODUCT.&CONTEXT.&INTTABLE.OD **Entity Name after Substitution:** BBM.MVSRM.*targetid*.WZ070.OD

MAINVIEW SYSPROG Services Resources

To disable, enable, or customize resource access authorization requests to the ESM for a MAINVIEW SYSPROG Services security resource:

- Display the SERDEFL view in MAINVIEW SYSPROG Services, as described in "Displaying a List of Members using the SERDEFL View" on page 186.
- Select the member you want to change that has a **Product** field of `MVSPS` or `MVCSMON`.

Note: MAINVIEW SYSPROG Services implements two separate service points: MVSPS and MVCSMON. The resource entity name that protects the CSMON primary action depends on which service point the window is connected to when the action is issued.

A total of five unique entity names control all MAINVIEW SYSPROG Services resources from the MVSPS service point. To enable or disable all security for the MVSPS service point, you need only disable or enable the following high-level resources.

- Default - Table Data
- Default - Any Table Actions
- Default - Primary Actions (All Views)
- Default - Specific Table Action
- Any Action (MVSPS Views)

One additional entity name controls resources from the MVCSMON service point. To enable or disable all security for the MVCSMON service point, you need only disable or enable the following high-level resource.

- Default - Primary Actions (All Views)

Table 33 on page 363 lists the resources that are protected by the MVSPS service point. Table 34 on page 366 lists the resources that are protected by the MVCSMON service point. The **Default Entity Name** is the entity name shared by a set of similar resources and is used for high-level control of the entire set. The **Entity Name after Substitution** is the entity name with any subsituted symbolic values for a particular resource. For a description of how the symbolics are used, see page 133.

The class name for all resources, unless otherwise indicated, is $BBM, which is automatically transformed to external resource class `FACILITY`.

Table 33. Resource Definitions for MAINVIEW SYSPROG Services - MVSPS Service Point

Resource name in SERDEF view	Resource definition and considerations
Default - Table Data	Can the user acess a view in MAINVIEW SYSPROG Services? **Default Entity Name:** BBM.&PRODUCT.&CONTEXT.&INTTABLE.OD **Entity Name after Substitution:** BBM.MVSPS.*targetid*.*tableid*.OD
Default - Any Table Actions	Can the user enter a view action for the current MAINVIEW SYSPROG Services view? **Default Entity Name:** BBM.&PRODUCT.&CONTEXT.&INTTABLE.AO **Entity Name after Substitution:** BBM.MVSPS.*targetid*.*tableid*.AO

Table 33. Resource Definitions for MAINVIEW SYSPROG Services - MVSPS Service Point (Continued)

Resource name in SERDEF view	Resource definition and considerations
Default - Primary Actions (All Views)	Can the user enter the CSMON or SYSPROG command in the current MAINVIEW SYSPROG Services? **Default Entity Name:** BBM.&PRODUCT.&CONTEXT.&INTTABLE.PA **Entity Name after Substitution:** BBM.MVSPS.*targetid*.*tableid*.PA
Default - Specific Table Action	Can the user enter specific view actions in specific MAINVIEW SYSPROG Services views? **Default Entity Name:** BBM.&PRODUCT.&CONTEXT.&INTTABLE.OA **Entity Name after Substitution:** BBM.MVSPS.*targetid*.*tableid*.OA
Any Action (MVSPS Views)	Can the user enter a view action? **Default Entity Name:** BBM.&PRODUCT.&CONTEXT.&INTTABLE.AA **Entity Name after Substitution:** BBM.MVSPS.*targetid*.*tableid*.AA
MVSPS Primary Action - CSMON	Can the user enter the CSMON command from a MAINVIEW SYSPROG Services view? **Default Entity Name:** BBM.&PRODUCT.&CONTEXT.&INTACTION.PA **Entity Name after Substitution:** BBM.MVSPS.*targetid*.CSMON.PA
MVSPS Primary Action - SYSPROG	Can the user enter the SYSPROG command from a MAINVIEW SYSPROG Services view? **Default Entity Name:** BBM.&PRODUCT.&CONTEXT.&INTACTION.PA **Entity Name after Substitution:** BBM.MVSPS.*targetid*.SYSPROG.PA
Consoles List - Table Data	Can the user access console list data for a MAINVIEW SYSPROG Services view? **Default Entity Name:** BBM.&PRODUCT.&CONTEXT.&INTTABLE.OD **Entity Name after Substitution:** BBM.MVSPS.*targetid*.DC127.OD
Console Service - Table Data	Can the user access console service data for a MAINVIEW SYSPROG Services view? **Default Entity Name:** BBM.&PRODUCT.&CONTEXT.&INTTABLE.OD **Entity Name after Substitution:** BBM.MVSPS.*targetid*.DC227.OD
Console Service - Any Action	Can the user enter any action for console service data? **Default Entity Name:** BBM.&PRODUCT.&CONTEXT.&INTTABLE.AO **Entity Name after Substitution:** BBM.MVSPS.*targetid*.DC227.AO
Console Service - Action - Command	Can the user enter a specific command for console service data? **Default Entity Name:** BBM.&PRODUCT.&CONTEXT.&INTTABLE.OA **Entity Name after Substitution:** BBM.MVSPS.*targetid*.DC227.CMD.OA
Exception Admin - Table Data	Can the user access system interval data for a MAINVIEW SYSPROG Services view? **Default Entity Name:** BBM.&PRODUCT.&CONTEXT.&INTTABLE.OD **Entity Name after Substitution:** BBM.MVSPS.*targetid*.DYEM0.OD

Table 33. Resource Definitions for MAINVIEW SYSPROG Services - MVSPS Service Point (Continued)

Resource name in SERDEF view	Resource definition and considerations
Exception Admin - Any Action	Can the user enter a view action for the current MAINVIEW SYSPROG Services view? **Default Entity Name:** BBM.&PRODUCT.&CONTEXT.&INTTABLE.AO **Entity Name after Substitution:** BBM.MVSPS.*targetid*.DYEM0.AO
Exception Admin - Action - Start AEW	Can the user enter the Start AEW command from a MAINVIEW SYSPROG Services view? **Default Entity Name:** BBM.&PRODUCT.&CONTEXT.&INTTABLE.&INTACTION.OA **Entity Name after Substitution:** BBM.MVSPS.*targetid*.DYEM0.STRTAEW.OA
Exception Admin - Action - Stop AEW	Can the user enter the Stop AEW command from a MAINVIEW SYSPROG Services view? **Default Entity Name:** BBM.&PRODUCT.&CONTEXT.&INTTABLE.&INTACTION.OA **Entity Name after Substitution:** BBM.MVSPS.*targetid*.DYEM0.STOPAEW.OA
Exception Admin - Action - Delete Member	Can the user enter the Delete Member command from a MAINVIEW SYSPROG Services view? **Default Entity Name:** BBM.&PRODUCT.&CONTEXT.&INTTABLE.&INTACTION.OA **Entity Name after Substitution:** BBM.MVSPS.*targetid*.DYEM0.DELMEM.OA
Exception Admin - Action - Display	Can the user enter the Display command from a MAINVIEW SYSPROG Services view? **Default Entity Name:** BBM.&PRODUCT.&CONTEXT.&INTTABLE.&INTACTION.OA **Entity Name after Substitution:** BBM.MVSPS.*targetid*.DYEM0.DISPLAY.OA
Exception Admin - Action - Read Directory	Can the user enter the Read Directory command from a MAINVIEW SYSPROG Services view? **Default Entity Name:** BBM.&PRODUCT.&CONTEXT.&INTTABLE.&INTACTION.OA **Entity Name after Substitution:** BBM.MVSPS.*targetid*.DYEM0.READDIR.OA
Exception Admin - Action - Read Member	Can the user enter the Read Member command from a MAINVIEW SYSPROG Services view? **Default Entity Name:** BBM.&PRODUCT.&CONTEXT.&INTTABLE.&INTACTION.OA **Entity Name after Substitution:** BBM.MVSPS.*targetid*.DYEM0.READMEM.OA
Exception Admin - Action - Write Member	Can the user enter the Write Member command from a MAINVIEW SYSPROG Services view? **Default Entity Name:** BBM.&PRODUCT.&CONTEXT.&INTTABLE.&INTACTION.OA **Entity Name after Substitution:** BBM.MVSPS.*targetid*.DYEM0.WRITEMEM.OA

Table 33. Resource Definitions for MAINVIEW SYSPROG Services - MVSPS Service Point (Continued)

Resource name in SERDEF view	Resource definition and considerations
Exception Admin - Action - Active Sampler	Can the user enter the Active AEW Sampler command from a MAINVIEW SYSPROG Services view? **Default Entity Name:** BBM.&PRODUCT.&CONTEXT.&INTTABLE.&INTACTION.OA **Entity Name after Substitution:** BBM.MVSPS.*targetid*.DYEM0.ACTSAMPL.OA
Warning - Table Data	Can the user access any MAINVIEW SYSPROG Services view? **Default Entity Name:** BBM.&PRODUCT.&CONTEXT.&INTTABLE.OD **Entity Name after Substitution:** BBM.MVSPS.*targetid*.DYEM0.OD

Table 34. Resource Definitions for MAINVIEW SYSPROG Services - MVCSMON Service Point

Resource name in SERDEF view	Resource definition and considerations
Default - Primary Actions (All Views)	Can the user enter the CSMON command in the current MAINVIEW SYSPROG Services? **Default Entity Name:** BBM.&PRODUCT.&CONTEXT.&INTTABLE.PA **Entity Name after Substitution:** BBM.MVCSMON.*targetid.tableid*.PA
MVCSMON Primary Action - CSMON	Can the user enter the CSMON command from a MAINVIEW SYSPROG Services view? **Default Entity Name:** BBM.&PRODUCT.&CONTEXT.&INTACTION.PA **Entity Name after Substitution:** BBM.MVCSMON.*targetid*.CSMON.PA

MAINVIEW VistaPoint Resources

To disable, enable, or customize resource access authorization requests to the ESM for a MAINVIEW VistaPoint security resource:

1. Display the SERDEFL view in VistaPoint.
2. Select the member you want to change that has a **Product** field value of `MVVP`.

A total of five unique entity names control all MAINVIEW VistaPoint resources. To enable or disable all security for VistaPoint, you need only disable or enable the following high-level resources:

- Default - Table Data
- Default - Any Table Actions
- Default - Alter Data Set
- Default - Specific Table Actions
- Any Action (VistaPoint Views)

The following table lists all resources that are protected by MAINVIEW VistaPoint. The **Default Entity Name** is the entity name shared by a set of similar resources and is used for high-level control of the entire set. The **Entity Name after Substitution** is the entity name with any substituted symbolic values for a particular resource. For a description of how the symbolics are used, see page 133.

The class name for all resources, unless otherwise indicated, is `$BBM`, which is usually, and by default, transformed to external resource class `FACILITY`.

Table 35. Resource Definitions for MAINVIEW VistaPoint

Resource name in SERDEF view	Resource definition and considerations
Default - Table Data	Can the user access a VistaPoint view? This default resource controls a subset of similar resources. Enabling, disabling, or changing this resource automatically enables, disables, or changes all resources with the following entity name. **Default Entity Name:** BBM.&PRODUCT.&CONTEXT.&INTTABLE.OD **Entity Name after Substitution:** BBM.MVVP.*targetid.tableid.*OD Specific resources belonging to this subset can be enabled, disabled, or changed on an individual basis.
Default - Any Table Actions	Can the user enter a view action for the current VistaPoint view? **Default Entity Name:** BBM.&PRODUCT.&CONTEXT.&INTTABLE.AO **Entity Name after Substitution:** BBM.MVVP.*targetid.tableid.*AO
Default - Alter Data Set	Can the user access a VistaPoint data set? **Class Name:** DATASET **Entity Name:** &DSN

Table 35. Resource Definitions for MAINVIEW VistaPoint (Continued)

Resource name in SERDEF view	Resource definition and considerations
Default - Specific Table Actions	Can the user enter specific view actions from VistaPoint views? **Default Entity Name:** BBM.&PRODUCT.&CONTEXT.&INTTABLE.&INTACTION.OA **Entity Name after Substitution:** BBM.MVVP.*targetid.tableid.actionid.*OA
Any Action (VistaPoint Views)	Can the user enter a view action in the current VistaPoint product? **Default Entity Name:** BBM.&PRODUCT.&CONTEXT.AA **Entity Name after Substitution:** BBM.MVVP.*targetid.*AA
Appl Definition - Table Data	Can the user access data for VistaPoint workload definition views? **Default Entity Name:** BBM.&PRODUCT.&CONTEXT.&INTTABLE.OD **Entity Name after Substitution:** BBM.MVVP.*targetid.*JAA20.OD
Appl Workload - Table Data	Can the user access data for VistaPoint application workload views? **Default Entity Name:** BBM.&PRODUCT.&CONTEXT.&INTTABLE.OD **Entity Name after Substitution:** BBM.MVVP.*targetid.*JAA1J.OD
Monitor - Table Data	Can the user access data for VistaPoint monitor views? **Default Entity Name:** BBM.&PRODUCT.&CONTEXT.&INTTABLE.OD **Entity Name after Substitution:** BBM.MVVP.*targetid.*JAA1Q.OD

Chapter 15. Resource Definitions Listed by View

The tables in this chapter list the views for each product and the name of the resource used by each view, as shown in the SERDEF view.

Common Views

Table 36 lists distributed views common to all products and their corresponding resource names.

Note: As described in Chapter 14, "Resource Definitions Listed by Product" on page 197, you can control access to all common views collectively by enabling, disabling, or changing the `Default - Table Data` in the SERDEF view of the `COMMON` security parameter member.

Table 36. Common Views

View	Resource name
DIAGMSG	XMsgDiagStatus - Table Data
DSLIST	Hist Data Set List - Table Data
SCREENS	ScrnTable - Table Data
SERDEF SERDEFD SERDEFE SERDEFEX SERDEFOV	ResDefDef - Table Data
SERDEFL	ResDefList - Table Data
USER VIEWS	ViewTable - Table Data

Plex Manager Views

Table 37 lists distributed Plex Manager views and their corresponding resource names.

Note: As described in Chapter 14, "Resource Definitions Listed by Product" on page 197, you can control access to all Plex Manager views collectively by enabling, disabling, or changing the `Default - Table Data` in the SERDEF view of the `PLEXMGR` security parameter member.

Table 37. Plex Manager Views

View	Resource name
ADMIN	ViewTable - Table Data
CASACT	CASAction - Table Data
CASDEF CASDEFD	CASDefn - Table Data
CONACT CONACTD CONACTZ CONASEL	SSIContextMem - Table Data
CONDEF CONDEFD	SSIContext - Table Data
CONDEFL	SSIContextLst - Table Data
DIAG	ViewTable - Table Data
DIAGCONN	DiagConn - Table Data
DIAGSESS	Sessions - Table Data
DIAGSYS	Systems- Table Data
EZPLEX	PlexTable - Table Data
EZSEC EZSECRES MAIN OPS	ViewTable - Table Data
PLEX PLEXAREA PLEXOVER PLEXPROD PRODSEL	PlexTable - Table Data
SECDEF SECDEFD	SecClass - Table Data
SECDEFL	SecClassList - Table Data
SECURITY	ViewTable - Table Data
SELTAB	SelectorTable - Table Data

Table 37. Plex Manager Views (Continued)

View	Resource name
SEPDEF SEPDEFD	SecParms - Table Data
SEPDEFL	SecParList - Table Data
SERDEFC SERDEFP TGTACT TGTACTZ TGTSEL	PlexTable - Table Data
TGTDEF TGTDEFD	TargetDef - Table Data
TGTDEFL	TargetDefLst - Table Data
UTILITY	ViewTable - Table Data

CMF MONITOR and MAINVIEW for OS/390 Views

Table 38 lists distributed CMF MONITOR and MAINVIEW for OS/390 views and their corresponding resource names. Views in **BOLD** face type require you to secure more than one resource table.

Note: As described in Chapter 14, "Resource Definitions Listed by Product" on page 197, you can control access to all CMF MONITOR and MAINVIEW for OS/390 views collectively by enabling, disabling, or changing the `Default - Table Data` in the SERDEF view of either CMF MONITOR or MAINVIEW for OS/390.

Table 38. CMF MONITOR and MAINVIEW for OS/390 Views

View	Resource name
ARD **DDJOB** **DUJOB** **JDDEV** **JDENQ** **JHSM*x*** **JJESD** **JMSGD** **JUDEV** **JUENQ** **JXCFD** **STORC**	Addr Space - Table Data
JSUM	Addr Space across interval - Table Data
DDJOB **DUJOB** **JDDEV** **JUDEV**	Addr Space Device Use/Delay- Table Data

Table 38. CMF MONITOR and MAINVIEW for OS/390 Views (Continued)

View	Resource name
JDENQ **JUENQ**	Address Space Enq Use/Delay - Table Data
JHSM*x*	Address Space HSM Use/Delay - Table Data
JJESD	Address Space JES Use/Delay - Table Data
JMSGD	Address Space MSG Use/Delay - Table Data
ASD ASRM EZMJOB JCPU JCPU*x* JDELAY JDELAY*x* JFLOW JFLOW*x* **JHSMD** JINFO JINFOR JIO JIO*x* JJESD JMSGD JOVER JOVER*x* JPAGDM JPAGDM*x* JPAGOV JPAGOV*x* JPAGSW JPAGSW*x* JSRM JSRM*x* JSTOR JSTOR*x* JSUM JSUBD JSUBD*x* JTREND JUSE **JXCFD**	Addr Space in Workload - Table Data
JXCFD	Address Space XCF Use/Delay - Table Data
CHANNEL	Channel Path - Table Data
CPSTAT **IOQ** **LCUINFO** **LCUSTAT**	Channel Path on LCU - Table Data
CSAREM CSASUM JCSA **STORC** STORC*x*	Common Storage - Table Data
SENQR	CMF Reserve - Table Data

Table 38. CMF MONITOR and MAINVIEW for OS/390 Views (Continued)

View	Resource name
EMSTAT **EXCEPT** **EZMSRM** **MPLSTAT** **SRCS** **SRMLSCT** **SRMOPT** **SYSCNFG** **SYSWKLD** **WLMMON** **WMMENU** **WMSPLX** **WMSPLXZ** **WMSYS**	CMF System Interval - Table Data
CPUINFO CPUSTAT	CPU - Table Data
DCSTAT	Data Collect Stat - Table Data
DSIO	DataSet I/O - Table Data
CDEV **DDJOB** DEV DEVINFO DEVSTAT DEVSTATZ DEVZ DSIO **DUJOB** EZMDEV **JDDEV** **JUDEV** LDEV PDEV SDEV TDEV	Device - Table Data
MSICCW **MSIOZ** **MSIRESP** **MSISEEK** **MSITRACE** **MSMDSN** **MSMVOL**	MVScope DD Entry - Table Data
ENQSTAT **JDENQ** **JUENQ** SENQ SENQ*x*	Enqueue - Table Data

Table 38. CMF MONITOR and MAINVIEW for OS/390 Views (Continued)

View	Resource name
MSPGM **MSTPGM** **MSTPGMZ** **MSMTASK** **MSTASK**	MVScope Execution Unit - Table Data
JHSMD **JHSMSTAT**	HSM Detail Data - Table Data
MSICCW	MVScope CCW and I/O Data - Table Data
MSICCW **MSIOZ** **MSIRESP** **MSISEEK** **MSITRACE**	MVScope I/O Interrupt - Table Data
CPSTAT **IOQ** **LCUINFO** **LCUSTAT**	Logical Control Unit - Table Data
LPARSTAT	LPAR/Domain - Table Data
MSDCPU MSDIAG MSDIO MSDPROF **MSICCW** **MSIOZ** **MSIRESP** **MSISEEK** **MSITRACE** MSLIST MSMAP **MSMDSN** MSMONSET **MSMTASK** **MSMVOL** **MSMVSTG** **MSPGM** **MSPROG** **MSRITEMZ** **MSRSLICE** **MSRSRCZ** **MSTASK** **MSTPGM** **MSTPGMZ**	MVScope Monitor Set - Table Data
DSPCUJ	MVMVS Access List - Table Data
CONSOLE	MVMVS Consoles - Table Data
CONSOLES	MVMVS Consoles List - Table Data
DSPCINFO DSPCSTAT DSPCZ	MVMVS DataSpace - Table Data
SRMESCT	MVMVS Expanded Storage Info- Table Data

Table 38. CMF MONITOR and MAINVIEW for OS/390 Views (Continued)

View	Resource name
EMSTAT **EXCEPT** **EZMSRM** **MPLSTAT** **SRCS** **SRMLSCT** **SRMOPT** **SYSCNFG** **SYSWKLD** **WLMMON** **WMMENU** **WMSPLX** **WMSPLXZ** **WMSYS**	MVMVS Sys Intvl - Table Data
WARN	MVMVS Warning - Table Data
WKLIST	MVMVS Wkld List - Table Data
MSXPLAIN	MVScope Messages - Table Data
MSPGM **MSTPGM**	MVScope Named Program Virt Stor - Table Data
PGDINFO PGDSTAT PGSPP	Page Dataset - Table Data
MSPROG **MSPGM** **MSTPGM** **MSTPGMZ**	MVScope Program Virt Stor - Table Data
MSTPGM **MSTPGMZ**	MVScope PSW Sample - Table Data
SYSOVER SYSSUM	Summary - Table Data
PGSPS SWDINFO SWDSTAT SWPINFO	Swap Dataset - Table Data
EXCEPT **SRCS** **SYSCNFG** SYSINFO SYSSTAT **SYSWKLD**	System CPU - Table Data

Table 38. CMF MONITOR and MAINVIEW for OS/390 Views (Continued)

View	Resource name
ESINFO **EXCEPT** EZMSTOR EZMSYS FRMINFO PGINFO **SPAG** **SRCS** STORAGE **SYSCNFG** **SYSWKLD**	System Paging - Table Data
SPAG	System Swap - Table Data
SMSINFO	SMS Storage Group - Table Data
DSPCDUMP	SPData Space - View - Contents
DDMN DMNSTAT DMNSTATR	SRM Domain - Table Data
MSRITEMZ **MSRSRCZ**	MVScope Time Buckets - Table Data
MSRSLICE	MVScope Time 8 Buckets - Table Data
MSMVSTG	MVScope Virtual Storage - Table Data
MSICCW **MSIOZ** **MSIRESP** **MSISEEK** **MSITRACE** **MSMVOL**	MVScope Volume Extent - Table Data

Table 38. CMF MONITOR and MAINVIEW for OS/390 Views (Continued)

View	Resource name
EZMWBAT EZMWORK EZMWTSO TRX WCPU WCPU*x* WDELAY WDELAY*x* WFLOW WFLOW*x* WIO WIO*x* WOBJ WOBJS WOVER WOVER*x* WPAGDM WPAGDM*x* WPAGOV WPAGOV*x* WPAGSW WPAGSW*x* WRT WRT*x* WSRM WSRM*x* WSTOR WSTOR*x* WTA WTAS WTREND WUSE	Workload - Table Data
WMCNVT WMCNVT*x* WMDLY WMDLY*x* **WMPRD** WMPRD*x* **WMRCLS** WMRCLS*x* **WMRTD** WMRTDR **WMSCLS** WMSCLSR **WMWKLD** WMWKLDR WMWKM WMWKMZ	Workload - WLM Ext Period - Table Data (MAINVIEW for MVS 2.4.02 and later) (CMF Monitor 5.2.03 and later)
WMPRD **WMRCLS** **WMRTD** **WMSCLS** **WMWKLD**	Workload - WLM Period - Table Data (MAINVIEW for MVS prior to 2.4.02) (CMF Monitor prior to 5.2.03)
WMASSC	Workload - WLM Server - Table Data
WMWKM WMWKMZ	Workload - WLM Subsystem - Table Data
XCFMBR XCFMBRR	XCF Member - Table Data

Table 38. CMF MONITOR and MAINVIEW for OS/390 Views (Continued)

View	Resource name
XCFCF XCFCTC XCFPTH XCFPTHR	XCF Path - Table Data
XCFSYS XCFSYSR	XCF System - Table Data

MAINVIEW Alarm Manager Views

The tables in this section list distributed MAINVIEW Alarm Manager views and their corresponding resource names:

- Table 39 lists the Alarm Administration views (MVALARM service point)
- Table 40 on page 379 lists the Alert Management views (MVALERT service point)

Note: As described in Chapter 14, "Resource Definitions Listed by Product" on page 197, you can control access to all MAINVIEW Alarm Manager views collectively by enabling, disabling, or changing the `Default - Table Data` in the SERDEF view of MAINVIEW Alarm Manager.

Table 39. MAINVIEW Alarm Manager - Alarm Administration Views

View	Resource name
ALGBRO01 ALGEDI01 ALGLST01 ALMADD01 ALMBRO01 ALMEDI01 ALMLST01 ALMLST02	Alarm Groups - Table Data
ALGBRO01 ALGEDI01 ALGLST01 ALMADD01 ALMBRO01 ALMEDI01 ALMKEY01 ALMKEY02 ALMLST01 ALMLST02	Alarm Definitions - Table Data

Table 39. MAINVIEW Alarm Manager - Alarm Administration Views (Continued)

View	Resource name
ALGBRO01 ALGEDI01 ALGLST01 ALMADD01 ALMBRO01 ALMEDI01 ALMLST01 ALMLST02	Alarm Thresholds - Table Data
ALARM ALARM*x*	Alarm Messages - Table Data

Table 40. MAINVIEW Alarm Manager - Alert Management Views

View	Resource name
ALERTQ ALERTQQZ ALERTQSZ	Alert Queues - Table Data
ALERTS ALERTSQ ALERTSP ALERTDTL	Alert Information - Table Data

MAINVIEW Explorer Views

Table 41 lists distributed MAINVIEW Explorer views and their corresponding resource names.

Note: As described in Chapter 14, "Resource Definitions Listed by Product" on page 197, you can control access to all MAINVIEW Explorer views collectively by enabling, disabling, or changing the `Default - Table Data` in the SERDEF view of MAINVIEW Explorer.

Table 41. MAINVIEW Explorer Views

View	Resource name
CLIENTS	SessionInfo - Table Data
EZEXP	ViewTable - Table Data
HSINFO	ServerInfo - Table Data
MVXVIEWS	ViewTable - Table Data

MAINVIEW for CICS Views

Table 42 lists distributed MAINVIEW for CICS views and their corresponding resource names.

Note: As described in Chapter 14, "Resource Definitions Listed by Product" on page 197, you can control access to all MAINVIEW for CICS views collectively by enabling, disabling, or changing the `Default - Table Data` in the SERDEF view of MAINVIEW for CICS.

Table 42. MAINVIEW for CICS Views

View	Resource name
MAIN	Main View - Table Data
ADMIN MONITOR REGION SECURITY USER WORKLOAD	Security - Table Data
CAIDS CAIDS*x*	CICS Auto Init Descs - Table Data
CCONN CCONN*x*	CICS Connection - Table Data
CDELAY CDELAY*xx*	Delay Analysis - Table Data
CDLYACT CDLYACT*x*	Active Delay Analysis - Table Data
CDLYDEF CDLYDEF*x*	Delay Analysis Definitions - Table Data
CDUMPCD CDUMPCD*x*	CICS Dump Codes - Table Data
CFILE CFILE*x*	CICS File - Table Data
CFLOW CFLOWS CWOVER CWOVER*x*	Response Time - Table Data
CHFILE CHFILE*x*	CICS T*xn* File History - Table Data
CHIST CHISTD*x*	CICS Transaction History - Table Data
CHISTP CHISTP*x*	CICS T*xn* History Parms - Table Data

Table 42. MAINVIEW for CICS Views (Continued)

View	Resource name
CICES CICES*x*	CICS Intv Cntl Elems - Table Data
CJVMPL CJVMPL*x*	CICS JVM Pool - Table Data
CMAREAZ	Monitors - Table Data by Area
CMON CMON*x*	Monitors - Table Data by Target
COBJ COBJ*x*	Workload Objectives - Table Data
CPROG CPROG*x*	CICS Program - Table Data
CRDELAY CRDLAY*xx*	Real-Time Delay Analysis - Table Data
CREGDB2 CREGDB2*x*	CICS Region DB2 - Table Data
CREGDBC CREGDBC*x*	CICS Region DBCTL - Table Data
CREGION CREGDET*x* CREGDSA CREGDSAS CREGIONZ CREGHR CREGNSEL CREGOVER	Regions - Table Data
CREGMQS CREGMQS*x*	CICS Region MQSeries - Table Data
CREGPRB CREGPRBZ	CICS Region Problems - Table Data
CREGSYS CREGSYS*x*	CICS Region System Parms - Table Data
CREGTSP CREGTSP*x*	CICS Region Temp Stg. - Table Data
CREVIEW CREVD CREVD*x*	CICS Initialization Parms - Table Data
CSERV CSERV*x*	Monitors - Table Data by Monitor

Table 42. MAINVIEW for CICS Views (Continued)

View	Resource name
CSESS CSESS*x*	CICS Session - Table Data
CSOVER CSOVER*x*	Monitors - Table Data by Type
CTASK*x* TASK TASK*x* TASKUOW TASKUOWZ	Task - Table Data
CTCPSRV CTCPSRV*x*	CICS TCPIP Service - Table Data
CTERM CTERM*x*	CICS Terminal - Table Data
CTIOT CVOLUME	CICS TIOT/Volume - Table Data
CTRAN CTRAN*x*	CICS Transaction - Table Data
CTRNCLA CTRNCLA*x*	CICS Transaction Class - Table Data
CWKLDDEF CWKLDDET	Monitors - Table Data Workload definitions
CAMXT CMXTC C@CMXT	Monitors - Table Data Max Task
CCSUT CECSUT	Monitors - Table Data CSA
CDSUT C#DSAV C#DSIZ C#DSTO	Monitors - Table Data DSA
C#ESAV C#ESIZ C#ESTO C#PROC	Monitors - Table Data ESA
C@SVCT	Monitors - Table Data Storage violations
CLSR*x*	Monitors - Table Data LSR
CSDCT CPGMS CTSTE	Monitors - Table Data Storage dumps

Table 42. MAINVIEW for CICS Views (Continued)

View	Resource name
C@INPQ C@RESP C@RSTM	Monitors - Table Data Input time
C@ELAP C@ELTM	Monitors - Table Data Elapsed time
C@PICT	Monitors - Table Data Program interrupts
C@GLB*x*	Monitors - Table Data CICS CPU
C@MONI	Monitors - Table Data CICS exceptions
C@PRB*x*	Monitors - Table Data CICS Problems
C@TDB*x* C@TDQ*x* C@TDS*x*	Monitors - Table Data TD
C@TSB*x* C@TSS*x*	Monitors - Table Data TS
C@TSK*x*	Monitors - Table Data TASK
DSLIST	Historical Datasets - Table Data
EZC*xxxxx*	Regions - Table Data
TASKDSA TASKDSA*x*	Task DSA - Table Data
TASKFIL TASKFIL*x*	Task File - Table Data
TASKLCK TASKLCK*x*	Task Lock - Table Data
TASKTRD	Task Trace - Table Data
TSQUEUE TSQUEUE*x*	CICS Temporary Storage Queue - Table Data
TSQUECF TSQUECF*x*	CICS Cplng. Fac. TS Queues - Table Data

MAINVIEW for DATA ACCELERATOR Compression Views

Table 43 lists distributed MAINVIEW for DATA ACCELERATOR Compression views and their corresponding resource names.

Note: As described in Chapter 14, "Resource Definitions Listed by Product" on page 197, you can control access to all MAINVIEW for DATA ACCELERATOR Compression views collectively by enabling, disabling, or changing the `Default - Table Data` in the SERDEF view of MAINVIEW for DATA ACCELERATOR Compression.

Table 43. MAINVIEW for DATA ACCELERATOR Compression Views

View	Resource name
CATLIST	MVS Catalog - Table Data
DACREGI	DAC REGISET Entry Statistics - Table Data
DACSTATS	DAC Compression Statistics - Table Data
IMSSTATS	DPK/IMS Statistics - Table Data
SMSSTATS	SMS Dataset Statistics - Table Data

MAINVIEW for DB2 Views

Table 44 lists distributed MAINVIEW for DB2 views and their corresponding resource names. An asterisk (*) indicates a group of views.

Note: As described in Chapter 14, "Resource Definitions Listed by Product" on page 197, you can control access to all MAINVIEW for DB2 views collectively by enabling, disabling, or changing the `Default - Table Data` in the SERDEF view of the MAINVIEW for DB2 security parameter member.

Table 44. MAINVIEW for DB2 Views

View	Resource name
AUTH*	Authorization Failures CDC0140 - Table Data
BFR* GBP*	BufferPool - Table Data
CMD*	DB2 Commands CDC0090 - Table Data
DATASET*	Data Set Opens CDC00107 - Table Data
DMAREAZ DMON* DMWARN DSERV* DSOVER*	Monitor - Table Data
Dxxxxx (all monitor plot views)	Monitor - Table Data
DOBJ*	Appl Workload - Table Data
HTLOGS	TLDS and MVDB2/DC Traces - Table Data
HT*	Thread Intervals - Table Data
LK*	LockOuts - Table Data
PS*	IoActivity - Table Data
RID*	RIDLIST CDC0125 - Table Data
SC*	Dynamic SQL Cache - Table Data
ST*	Status - Table Data
THD*	Users - Table Data
WZ*	Status - Table Data BufferPool - Table Data
ZP*	ZPARM - Table Data

MAINVIEW for IMS Online and MAINVIEW for DBCTL Views

Table 45 lists distributed MAINVIEW for IMS Online and MAINVIEW for DBCTL views and their corresponding resource names. An asterisk (`*`) indicates a group of views.

Note: As described in Chapter 14, "Resource Definitions Listed by Product" on page 197, you can control access to all MAINVIEW for IMS Online and MAINVIEW for DBCTL views collectively by enabling, disabling, or changing the `Default - Table Data` in the SERDEF view of the product security parameter member.

Table 45. MAINVIEW for IMS Online and MAINVIEW for DBCTL Views

View	Resource name
IOBJS	Appl Monitor - Table Data
IOBJ IOBJR	Appl Workload - Table Data
IBGSUM IBGSUMR	Balancing Group - Table Data
ICL*	Class Activity - Table Data
ISQINAR ISQINR ISQNAMER ISQOUTAR ISQOUTR ISQOWNER ISQQTAR ISQQTR ISQSTAR ISQSTR	CQS Qtype Record
IDBDTLR IDBSTAR IDBSUMR IDBTYPR	Database - Table Data
IDA*	Database Activity Record
IFP*	FP Area - Table Data
ITAQUERY	Governer Selector
DBC* IMS*	IMS Overview - Table Data
IPRDDTL IPRDSUM	Installed Products - Table Data
ILKRGLST ILKRGSUM ILKRGWT ILKRSLST ILKRSSUM ILKRSWT	IRLM Lock Record

Table 45. MAINVIEW for IMS Online and MAINVIEW for DBCTL Views (Continued)

View	Resource name
IU*	IUsers - Table Data
I#* I$* I@* IA* ICIOP ICSAUT ICWAP ID2* IDBHIT IDBIO IDSTL IDBWP IDEADQ IDLIO IDMBP IDPAGE IDSAP IECSAU IEPCB IH* II* ILAWT ILDLCK ILGMSG ILHELD ILKREQ ILSUSP ILTMOT ILWNUM IMAREAZ IMFS* IMO* IMSUM IMWARN IOBUFW IOCHKW IOQ* IOU* IPAGE IPIENQ IPIPL IPOOL* IPRC* IPSB* IPTBLK IQ* IRECA ISBUSE ISCHFL ISER* ISHMSG ISO* ISYSIO IV* IW*	Monitor - Table Data
IOT* ITPIP*	OTMA Record
IX*	Pgm DB Tran Cross Reference
IPG*	Program - Table Data
DRGN* IRGN*	Region - Table Data
DRGO* IRGO*	Region Occupancy - Table Data
ISAMP ISAMPD	Sampler Admin - Table Data
ISAMPOP ISAMPOPD	Sampler Operations - Table Data
ISQDTLR ISQSUMR	Shared Message Queue Record

Table 45. MAINVIEW for IMS Online and MAINVIEW for DBCTL Views (Continued)

View	Resource name
ITALIST	Trace Directory Display
ITALISTD	Trace Selection Expansion Record
IDLD* IDLV*	Tran I/O - Table Data
IDLLH* IDLTRLH	Tran Latch - Table Data
IDLLK* IDLTRLK	Tran Lock - Table Data
IDLTR IDLTRDB2 IDLTRIO IDLTROT IDLTRPL IFCTR*	Tran Sample Event - Table Data
ITR*	Transaction - Table Data
ITAS*	Transaction Trace Record

MAINVIEW for IP Views

Table 46 lists distributed MAINVIEW for IP views and their corresponding resource names. An asterisk (*) indicates a group of views.

Note: As described in Chapter 14, "Resource Definitions Listed by Product" on page 197, you can control access to all MAINVIEW for IP views collectively by enabling, disabling, or changing the `Default - Table Data` in the SERDEF view of MAINVIEW for IP.

Table 46. MAINVIEW for IP Views

View	Resource name
MAIN	Main View - Table Data
SECURITY	Security - Table Data
ALLCONS ALLDET CLSACONS CLSBCONS CLSCCONS CLSARESP CLSBRESP CLSCRESP CONNRESP	Connections - Table Data
CSAU VTMBUF*	Storage VTAM - Table Data
CSM CSMD	Storage CSM - Table Data
DIAGIR	IRAssist Status - Table Data
DSLIST	Historical Data Sets - Table Data
EZIP EZIP*	Menu - Table Data
IPCONF IPCONFD	Configuration - Table Data
IPPACCFG	IP Pacing Configuration - Table Data
IPPACSTA	IP Pacing Information - Table Data
JOBRESP JOBRESP*	Job Response - Table Data
PCONS PING	PING - Table Data
PKTTRAC* PKTTRCd*	Packet Trace - Table Data
PORTRSP*	Port Response - Table Data

Table 46. MAINVIEW for IP Views (Continued)

View	Resource name
SKTTRAC* SKTTRCD*	Socket Trace - Table Data
SMFCONF SMFCONFD	Configuration - Table Data
SNMPCSC*	SNMP Cisco - Table Data
SNMPDEF	SNMP Nodes - Table Data
SNMPIF*	SNMP IF - Table Data
SNMPIP*	SNMP IP - Table Data
SNMPOSP*	SNMP OSPF - Table Data
SNMPSYS*	SNMP SYS - Table Data
SNMPTCP*	SNMP TCP - Table Data
SNMPUDP*	SNMP UDP - Table Data
TACAPPL TACAPPLD	Connections - Table Data
TACCACH*	Web Cache - Table Data
TACDEV*	Network Devices - Table Data
TACFTP* TACFTP*D	FTP Server - Table Data
TACLNK*	Network Links - Table Data
TACOSA* TACOSA*D	OSA Devices - Table Data
TACPORT TACPORTD	Ports - Table Data
TACROUT TACROUTD	Routes - Table Data
TACSLAP TACSLAPD	SLA Policy - Table Data
TACSTAT TACSTCP TACSTI* TACSTI*Z TACSTTC TACSTTCZ TACSTUD TACSTUDZ TACTCSB	Stack Information - Table Data

Table 46. MAINVIEW for IP Views (Continued)

View	Resource name
TCONS TRACE TRACEDET	Traceroute - Table Data
TCPCONF TCPCONFD	Configuration - Table Data
TCPCONS TCPDETX	Connections - Table Data
UDPCONF UDPCONFD	Configuration - Table Data
UDPCONS UDPDET	Connections - Table Data
VIPACFG VIPACFG* VIPACNND VIPACONN VIPADYN VIPAPORT VIPAPRTD	VIPA - Table Data

MAINVIEW for Linux – Servers Views

Table 47 lists distributed MAINVIEW for Linux – Servers views and their corresponding resource names. Views in **BOLD** face type require you to secure more than one resource table.

Note: As described in Chapter 14, "Resource Definitions Listed by Product" on page 197, you can control access to all MAINVIEW for Linux – Servers views collectively by enabling, disabling, or changing the `Default - Table Data` in the SERDEF view of MAINVIEW for Linux – Servers.

Table 47. MAINVIEW for Linux – Servers Views

View	Resource name
CFLCOLL	Config: Collector Information - Table Data
CFLDCTL	Config: Disk Controller - Table Data
CFLDISK	Config: Disk Device - Table Data
CFLFSYS	Config Sys Parms: File System - Table Data
CFLVMEM	Config Sys Parms: Virtual Memory - Table Data
CFLKERNL **SYLHOST**	Config Sys Parms: General Kernel - Table Data
CFLNETC	Config Sys Parms: Network Core - Table Data
CFLNIFC	Config: Network Interfaces General - Table Data
CFLIFC4 CFLNN4	Config Sys Parms: Network IPV4 Intfcs - Table Data
CFLICMP4 CFLIP4 CFLIPF4 CFLTCP4 CFLRT	Config Sys Parms: Network IPV4 - Table Data
CFLPART	Config: Disk Partition - Table Data
CFLPAS	Config: PAS Information - Table Data
CFLSYS	Config: System Information - Table Data
DVLSTAT	Device Statistics - Table Data
MNTPT **FSLMNT** FSLMNTPT FSLINFO	Mount Point - Table Data
FSLSPACE	File Space Used - Table Data
FSLMNT	Mounted File Systems - Table Data

Table 47. MAINVIEW for Linux – Servers Views (Continued)

View	Resource name
SYLOVER **SYLOVERZ**	Image Status - Table Data
ADLRULE ADLRULED	Monitor Rule - Table Data
CFLKERNL **SYLOVER** **SYLOVERZ** **SYLHOST** EZLIMAGE	Full Host Name - Table Data
SYLCPU SYLCPUZ	CPU Statistics - Table Data
SYLTBLS SYSOVER SYLUSE SYLSWAP	System Resource Usage - Table Data
SYLMSQI	Message Queue Information - Table Data
SYLMSQX	Message Queue Statistics - Table Data
NTLSTAT	Network Statistics - Table Data
PSLCMND **PSLUSE** **PSLINFO** **PSLOVER** **GRLOVERZ** **USLOVERZ**	Process Statistics - Table Data
PSLTREE	Process Tree - Table Data
PSLCMND **PSLUSE** PSLXPATH **PSLOVER** **GRLOVERZ** **USLOVERZ**	Process/Full Path - Table Data
PSLCMND **PSLUSE** **PSLINFO** **PSLOVER** **GRLOVERZ** **USLOVERZ** PSLCPARM	Process/Full Command - Table Data
SYLSEMS	Semaphore Statistics - Table Data
SYLSEMI	Semaphore Information - Table Data
SYLSHMI	Shared Memory Information - Table Data

Table 47. MAINVIEW for Linux – Servers Views (Continued)

View	Resource name
SYLSHMS	Shared Memory Statistics - Table Data
USLINFO	User Id Information - Table Data
PSLCMND **PSLUSE** USLLOGIN **PSLOVER** **GRLOVERZ** **USLOVERZ**	Login Statistics - Table Data

MAINVIEW for UNIX System Services Views

Table 48 lists distributed MAINVIEW for UNIX System Services views and their corresponding resource names. Views in **BOLD** face type require you to secure more than one resource table.

Note: As described in Chapter 14, "Resource Definitions Listed by Product" on page 197, you can control access to all MAINVIEW for UNIX System Services views collectively by enabling, disabling, or changing the `Default - Table Data` in the SERDEF view of the MAINVIEW for UNIX System Services security parameter member.

Table 48. MAINVIEW for UNIX System Services Views

View	Resource name
PSTREE	Process Tree - CECA Table Data
PSFILENM PSFOPEN	Process Files Open - CECB Table Data
ASDELAYZ **ASINFOZ** **ASOVERZ** **GRPOVERZ** **PSCMND** PSCTTY **PSDELAY** **PSDELAYZ** **PSOVER** **PSOVERZ** **PSSTAT** **PSTREE** **PSUSE** **PSUSEZ** **USERJOBZ** **USROVERZ** **USRSESSZ**	Process/tty - CECC Table Data
PSCMND PSEXPATH	Process/path - CECD Table Data

Table 48. MAINVIEW for UNIX System Services Views (Continued)

View	Resource name
ASDELAYZ **ASINFOZ** **ASOVERZ** **GRPOVERZ** PSCMDPRM **PSCMND** **PSDELAY** **PSDELAYZ** **PSINFO** **PSOVER** **PSOVERZ** **PSSTAT** **PSTREE** **PSUSE** **PSUSEZ** **USERJOBZ** **USROVERZ** **USRSESSZ**	Process/command - CECE Table Data
PSCMND PSWRKDIR	Process/cwd - CECF Table Data
ASDELAYZ **ASOVERZ** **GRPOVERZ** **PSCMND** **PSDELAY** **PSDELAYZ** **PSINFO** **PSOVER** **PSOVERZ** **PSSTAT** **PSTREE** **PSUSE** **PSUSEZ** **USROVERZ** **USRSESSZ**	Processes - CEC0 Table Data
THREAD THREAD1	Thread Collector - CEC1 Table Data
FSINFO **FSMOUNT** **FSMOUNTZ** **HFSINFO** **HFSIO** **HFSIOZ** **HFSOVER** **HFSOVERZ**	Mounted File Systems - CEC2 Table Data
FSDIRNM FSFILENM FSPACE	File Space Usage - CEC3 Table Data
BPXPRM IPCBPXP **SYSOVER**	System Parameters - CEC4 Table Data
IPCMSGDR IPCMSGR IPCOVER IPCSEMDR IPCSEMR IPCSHMDR IPCSHMR	IPCS Real Time - CEC5 Table Data
REQSTAT	Request Status - CEC9 Table Data

Table 48. MAINVIEW for UNIX System Services Views (Continued)

View	Resource name
FSINFO FSMNTPT **FSMOUNT** **FSMOUNTZ** **HFSINFO** **HFSIO** **HFSIOZ** **HFSOVER** **HFSOVERZ**	Filesys/mountpoint - CED0 Table Data
FSINFO FSMNTPRM **FSMOUNT** **FSMOUNTZ** **HFSINFO** **HFSIO** **HFSIOZ** **HFSOVER** **HFSOVERZ**	Filesys/mountparm - CED1 Table Data
HFSGINFO **SYSOVER**	HFS Global - CED2 Table Data
HFSINFO **HFSIO** **HFSIOZ** **HFSOVER** **HFSOVERZ**	HFS File Systems - CED3 Table Data
HFSGBUF HFSGBUFZ	HFS Global Buffers - CED4 Table Data
PESTAT	Required Processes - CED5 Table Data
HFSSTAT HFSSTAT1	Required HFS Files - CED6 Table Data
ASDELAYZ **PSSTAT** **ASINFOZ** **PSTREE** **ASOVERZ** **PSUSE** **GRPOVERZ** **PSUSEZ** **PSCMND** **USERJOBZ** **PSDELAY** **USROVERZ** **PSDELAYZ** **USRSESSZ** **PSINFO** **PSOVER** **PSOVERZ**	WLM Address Space - CE48 Table Data
DCSTAT	Data Collect Stat - C427 Table Data

MAINVIEW for VTAM Views

Table 49 lists distributed MAINVIEW for VTAM views and their corresponding resource names. An asterisk (`*`) indicates a group of views

Note: As described in Chapter 14, "Resource Definitions Listed by Product" on page 197, you can control access to all MAINVIEW for VTAM views collectively by enabling, disabling, or changing the `Default - Table Data` in the SERDEF view of the MAINVIEW for VTAM security parameter member.

Table 49. MAINVIEW for VTAM Views

View	Resource name
APPL* ARES ARES*	Applications - Table Data
EZAPPL EZLU EZTN3270 EZTRAN EZVTAM	Menu - Table Data
LURES LURES*	LU Resources - Table Data
LUS LUDET LUSUM	LUs - Table Data
NCPINFO	SOPNCP - Table Data
NCPRINFO	SOPRSC - Table Data
TAPPCORR TDOMAIN TIPADDR TIPLUMAP TLUBYTED TLUS TRESP*	TN3270 Statistics - Table Data
VTMBUFF	SOPBfuse- Table Data
XACTNS XACTDET XACTSUM	Transactions - Table Data
XACTRES XACTRESD XACTRSUM	Transaction Resources - Table Data

MAINVIEW for WebSphere Application Server Views

Table 50 lists distributed MAINVIEW for WebSphere Application Server views and their corresponding resource names. An asterisk (`*`) indicates a group of views.

Note: As described in Chapter 14, "Resource Definitions Listed by Product" on page 197, you can control access to all MAINVIEW for WebSphere Application Server views collectively by enabling, disabling, or changing the `Default - Table Data` in the SERDEF view of the MAINVIEW for WebSphere Application Server security parameter member.

Table 50. MAINVIEW for WebSphere Application Server Views

View	Resource name
ACCESS ACCESS* AUTHZ	Access - Table Data
ACCSTAT	Hourly Access - Table Data
CACHE CACHED	Web Server Information - Table Data
CODEZ	Access - Table Data
ERRORS ERRORS*	Errors - Table Data
ERRSTAT	Hourly Errors - Table Data
EZAAUTH EZERRORZ EZFILE EZFILNF EZHACC EZHERR EZHUSR EZVUSR EZWEB	Menu - Table Data
FILESUM NOFILEZ	Access - Table Data
PERFORM PERFORMD PERFSUM REQUEST REQUESTD RESPONSE RESPONSD SERVER	Web Server Information - Table Data
STMDATA STMDATAD	Client Response Times - Table Data

Table 50. MAINVIEW for WebSphere Application Server Views (Continued)

View	Resource name
TRAFFIC TRAFFICD	Web Server Information - Table Data
UACCSUM UVOLSUM	Access - Table Data

MAINVIEW for WebSphere MQ Views

The tables in this section list distributed MAINVIEW for WebSphere MQ (formerly known as MAINVIEW for MQSeries) views and their corresponding resource names. An asterisk (`*`) indicates a group of views. Views in **BOLD** face type require you to secure more than one resource table.

- Table 51 lists the basic MAINVIEW for WebSphere MQ views
- Table 52 on page 401 lists the MAINVIEW for WebSphere MQ Integrator views

Note: As described in Chapter 14, "Resource Definitions Listed by Product" on page 197, you can control access to all MAINVIEW for WebSphere MQ views collectively by enabling, disabling, or changing the `Default - Table Data` in the SERDEF view of the MAINVIEW for WebSphere MQ security parameter member.

Table 51. MAINVIEW for WebSphere MQ Views

View	Resource name
AQ AQD	Alias Queue - Table Data
BP **BPD** TOPOLOGY TOPEXCP TOPLIST TOPOVER	Topology - Table Data
BP **BPD**	BufPool - Table Data
CHNL*	Channel - Table Data
CCHNL CCHNLD	CICSChnl - Table Data
DLQM DLQM* EVENTS EVT* LQM LQMD MB ML MLX XQM XQMD	Message - Table Data
LQ LQD XQ	Queue - Table Data
MQ MQD	ModelQueue - Table Data

Table 51. MAINVIEW for WebSphere MQ Views (Continued)

View	Resource name
PROC PROCD PS **STC** STCDTHRDA **THRD***	Processes - Table Data
PS	PageSet - Table Data
QMD* QMP*	QMgrDef - Table Data
QUEUES	Queue List - Table Data
RQ RQD	Remote Queue - Table Data
STC STCD	StorageClass - Table Data
THRD*	Thread - Table Data

Table 52. MAINVIEW for WebSphere MQ Integrator Views

View	Resource name
WMQICOMP	WMQI Components - Table Data
BROKER BROKERD	WMQI Broker - Table Data
BKRZOS BKRZOSD	WMQI z/OS Broker - Table Data
CFGMGR CFGMGRD	WMQI Configuration Manager - Table Data
EVTSQ	WMQI Event - Table Data
EVTS EVTZQ	WMQI Event Sources - Table Data
EVTSQD	WMQI Event Details - Table Data
EXECGRP EXECGRPD EGTRACE	WMQI Execution Group - Table Data
MSGFLOW MSGFLOWD MFTRACE	WMQI Message Flow - Table Data

Table 52. MAINVIEW for WebSphere MQ Integrator Views (Continued)

View	Resource name
NODE NODEZ EGQZ EGQS MFQZ MFQS MBQZ MBQS	WMQI Nodes - Table Data
NODED	WMQI Node Details - Table Data
UNSVR UNSVRD	WMQI User Name Server - Table Data
UNSZOS UNSZOSD	WMQI z/OS User Name Server - Table Data

MAINVIEW Storage Resource Manager (SRM) Views

The tables in this section list distributed MAINVIEW SRM views and their corresponding resource names:

- Table 53 lists the MAINVIEW SRM common views
- Table 54 on page 405 lists the MAINVIEW SRM EasyHSM views
- Table 55 on page 407 lists the MAINVIEW SRM SG-Control views
- Table 56 on page 407 lists the MAINVIEW SRM StorageGUARD views

Note: As described in Chapter 14, "Resource Definitions Listed by Product" on page 197, you can control access to all MAINVIEW SRM views collectively by enabling, disabling, or changing the `Default - Table Data` in the SERDEF view of MAINVIEW SRM.

Table 53. MAINVIEW SRM Common Views

View	Resource name
MAIN SECURITY	View Table - Table Data
WBHLQ	WBHILVLQALFIFIER - Table Data
WBSL	WBSUPERLOCATE - Table Data
WBDSIM	HSMMigratDSI- Table Data
WBDSIC	HSMClusterInfo - Table Data
WBDSII	Workbench VSAM Index Information - Table Data
WBDSID	HSMVSAMDATAC - Table Data
WBDSIA	HSMNVSAMDSI - Table Data
WBVTOC	WBVTOCSCOLDS - Table Data
WBVTOCD	WBVTOCSDSLST - Table Data
WBVTOCV	WBVTOCSVOLST - Table Data
HSMOMDS HSMOMDSD	HSMOPMgmtDS - Table Data
HSMOMML HSMOMMLD	HSMOPMgmtML - Table Data
HSMDVER HSMDVERD	HSMBKUPVER4DS - Table Data
ADMEM	PARMILBMEM - Table Data
ADFUNC	PARMLIBFUNC - Table Data
ADNEWD	ParmilbNew - Table Data
COMPSTAT COMPSTRT	ComponentStatus - Table Data

Table 53. MAINVIEW SRM Common Views (Continued)

View	Resource name
MPOOL MPOOLDET MPOOLS	MONPOOL - Table Data
MSMSG MSMSGDET MSMSGS	MONSMSSG - Table Data
MSMSP MSMSPDET	MONSMSP - Table Data
MVOLSSPC	MONVOLSMSPACE - Table Data
MVOLSPC MVOLSPCD MPOOLVOL MPOOLVOLD	MONVOLSPACE - Table Data
MSMSPDIS MSMSPDISD	MONSMSPD - Table Data
MVOLPER MVOLPERD MVOLPERS	MONVOLPERF - Table Data
MPOOLDIS MPOOLDISD	MONPOOLD- Table Data
MVOLPAV MVOLPAVD	MONVOLPAVP - Table Data
MVOLCACH MVOLCAHD	MONVOLCACHE - Table Data
MDEV MDEVD MDEVSUM	MONDEV - Table Data
MDEVSP MDEVSPD	MONDEVSP - Table Data
MCHAN MCHAND MCHANSUM	MONCHAN - Table Data
MIOQ MIOQD MIOQSUM	MONIOQ - Table Data
MRES MRESD	MONENQRES - Table Data
MENQ MENQD	MONENQ - Table Data

Table 53. MAINVIEW SRM Common Views (Continued)

View	Resource name
REBOX REBOXDET RECONFIG RECONFID REBOXS	RAIDEMCBOX - Table Data
REPHY REPHYDET REPHYS	RAIDEMCPHY - Table Data
REDEV REDEVDET	RAIDEMCDEV - Table Data
REVOL REVOLDET	RAIDEMCVOL- Table Data
REDIR REDIRDET	RAIDEMCDIR - Table Data
RESUB RESUBDET	RAIDEMCSUBSYS- Table Data
RESRDF RESRDFDET	RAIDEMCSRDFDEV - Table Data
RIVOL RIVOLDET	RAIDIBMVOL - Table Data
RIBOX RIBOXDET	RAIDIBMBOX - Table Data
RIPHY RIPHYDET	RAIDIBMPHY - Table Data
RISUB RISUBDET	RAIDIBMSUBSYS - Table Data

Table 54 lists the MAINVIEW SRM EasyHSM views.

Table 54. MAINVIEW SRM EasyHSM Views

View	Resource name
MAIN SECURITY	ViewTable - Table Data
HSMBKRC HSMBKRCD	HSMBkupRecovry - Table Data
HSMERDT HSMERDTD	HSMErrorDet - Table Data
HSMERRS HSMERRSD	HSMErrors - Table Data
HSMLOGE HSMLOGED	HSMLogEntries - Table Data

Table 54. MAINVIEW SRM EasyHSM Views (Continued)

View	Resource name
HSMMGAT HSMMGATD	HSMMigratAct - Table Data
HSMMGTH HSMMGTHD	HSMMigratThrash - Table Data
HSMRCAL HSMRCALD	HSMRecallAct - Table Data
HSMDSDL HSMDSDLD	HSMDSDeletions - Table Data
HSMDLYA HSMDLYAD	HSMDlyACT - Table Data
HSMDLYV HSMDLYVD	HSMDLYVOL - Table Data
HSML1L2 HSML1L2D	HSMMigratL1L2 - Table Data
HSMBKDS HSMBKDSD	HSMCDSQBkupDS - Table Data
HSMBKVR HSMBKVRD	HSMBKUPVER - Table Data
HSMDVER HSMDVERD	HSMBKUPVER4DS - Table Data
HSMMGDS HSMMGDSD	HSMMigratDS - Table Data
HSMOMDS HSMOMDSD	HSMOPMgmtDS - Table Data
HSMOMML HSMOMMLD	HSMOPMgmtML - Table Data
HSMOCDS HSMOCDSD	HSMOCDSDS - Table Data
HSMOCDV HSMOCDVD	HSMOCDSVOL - Table Data
HSMMGTD HSMMGTDD	HSMMigratThrashD - Table Data
WBDSIM	HSMMigratDSI - Table Data
WBDSIC	HSMClusterInfo - Table Data
WBDSII	HSMVSAMIDX - Table Data
WBDSID	HSMVSAMDATATAC - Table Data
WBDSIA	HSMNVSAMDSI - Table Data

Table 55 lists the MAINVIEW SRM SG-Control views.

Table 55. MAINVIEW SRM SG-Control Views

View	Resource name
MAIN SECURITY	ViewTable - Table Data
APPLDET	APPLDATA - Table Data
APPLTAB APPLDTL	ACCT - Table Data
APPLGRPD	ApplGroup - Table Data
APPLMASD	ApplMass - Table Data
APPLDSNT APPLDSND	ACCTofDSN - Table Data

Table 56 lists the MAINVIEW SRM StoragGUARD views. Historical Space and Historical Peformance views are both listed in this table.

Table 56. MAINVIEW SRM StorageGUARD Views

View	Resource name
MAIN SECURITY	ViewTable - Table Data
Historical Space Views	
SPRAIDVO SPRAIDVT SPRAIDVD SPRAIDVW SPRAIDVM	SpaceRaidVol - Table Data
SPRAID SPRAIDDT SPRAIDD SPRAIDW SPRAIDM	SpaceRaidSnap - Table Data
SPAPPL SPAPPLDT SPAPPLD SPAPPLW SPAPPLM	SpaceAcctSnap - Table Data
SPVOL SPVOLDT SPVOLD SPVOLW SPVOLM	SpaceVolSnap - Table Data

Table 56. MAINVIEW SRM StorageGUARD Views (Continued)

View	Resource name
SPPOOL SPPOOLDT SPPOOLD SPPOOLW SPPOOLM	SpacePoolSnap - Table Data
SPSNAP SPSNAPDT SPSNAPD SPSNAPW SPSNAPM	SpaceSnap - Table Data
Historical Performance Views	
PRINTV PRINTVDT	SGPInterval - Table Data
PRSSUM PRSSUMDT PRSSUMD PRSSUMW PRSSUMM	SGPSystemSummary - Table Data
PRCHP PRCHPDT PRCHPD PRCHPW PRCHPM PRCHPS	SGPChannel Path - Table Data
PRCCU PRCCUDT PRCCUD PRCCUW PRCCUM PRCCUS	SGPCacheCntUnt - Table Data
PRLCU PRLCUDT PRLCUD PRLCUW PRLCUM PRLCUS	SGPLogicalCntUnt - Table Data
PRVOL PRVOLDT PRVOLD PRVOLW PRVOLM PRVOLS	SGPVolume - Table Data

Table 56. MAINVIEW SRM StorageGUARD Views (Continued)

View	Resource name
PRPOOL PRPOOLDT PRPOOLD PRPOOLW PRPOOLM PRPOOLS	SGPPool - Table Data
PRSCL PRSCLDT PRSCLD PRSCLW PRSCLM	SGPStorageClass - Table Data
PRDS PRDSDT PRDSD PRDSW PRDSM PRDSS	SGPDataSet - Table Data
PRJOB PRJOBDT PRJOBD PRJOBW PRJOBM PRJOBS	SGPJob - Table Data
PRRDIR PRRDIRDT PRRDIRD PRRDIRW PRRDIRM	SGPRaidDirector - Table Data
PRPVOL PRPVOLDT PRPVOLD PRPVOLW PRPVOLM PRPVOLS	SGPRaidPhyVolume - Table Data
PRRSF PRRSFDT PRRSFD PRRSFW PRRSFM PRRSFS	SGPRVASSFrame - Table Data
PRRRK PRRRKDT PRRRKD PRRRKW PRRRKM PRRRKS	SGPRaidRank - Table Data

MAINVIEW SYSPROG Services Views

Table 57 lists distributed MAINVIEW SYSPROG Services views and their corresponding resource names.

Note: As described in Chapter 14, "Resource Definitions Listed by Product" on page 197, you can control access to all MAINVIEW SYSPROG Services views collectively by enabling, disabling, or changing the `Default - Table Data` in the SERDEF view of MAINVIEW SYSPROG Services.

Table 57. MAINVIEW SYSPROG Services Views

View	Resource name
CONSOLE	MVSPS Consoles - Table Data
CONSOLES	MVSPS Consoles List - Table Data
EMSTAT	MVSPS Sys Intvl - Table Data
WARN	MVSPS Warning - Table Data

MAINVIEW VistaPoint Views

Table 58 lists distributed MAINVIEW VistaPoint views and their corresponding resource names. An asterisk (`*`) indicates a group of views.

Note: As described in Chapter 14, "Resource Definitions Listed by Product" on page 197, you can control access to all MAINVIEW VistaPoint views collectively by enabling, disabling, or changing the `Default - Table Data` in the SERDEF view of the MAINVIEW VistaPoint security parameter member.

Table 58. MAINVIEW VistaPoint Views

View	Resource name
APGRP APGRP* APOVER APOVER* WKDETL WKDETL* WKOVER WKOVER*	Appl Workload - Table Data
APPLDEF APPLDEFZ	Appl Definition - Table Data
VMON VMON*	Monitor - Table Data

Part 4. MAINVIEW Alternate Access Security

This part describes MAINVIEW Alternate Access security.

Chapter 16. Defining Security for MAINVIEW Alternate Access 413
Understanding AutoLogon Session Security Issues. 413
Defining Additional Security for Terminals. 414
Defining Additional Security for Applications 415
Configuring CA-ACF2 for MAINVIEW Alternate Access 416
Customizing Class TERMINAL Access Authorization for CA-ACF2 419
Customizing Class APPL Access Authorization for CA-ACF2 419
Configuring RACF for MAINVIEW Alternate Access 421
Customizing Class TERMINAL Access Authorization for RACF. 422
Customizing Class APPL Access Authorization for RACF 422
Configuring CA-TOP SECRET for MAINVIEW Alternate Access 423
Customizing Class TERMINAL Access Authorization for CA-TOP SECRET. 424
Customizing Class APPL Access Authorization for CA-TOP SECRET 425

Chapter 16. Defining Security for MAINVIEW Alternate Access

MAINVIEW Alternate Access uses the standard MVS SAF interface to interface with your external security manager (ESM) and requires that each user ID for a session be defined to your ESM. A session does not initialize if the user ID is unknown to your ESM.

Other customization to support security may be required as well, depending on which ESM is installed at your site. For example:

- AutoLogon sessions may be established with user IDs that do not require manual entry of clear text passwords by customizing CA-ACF2 or RACF to define and protect a `FACILITY(BOOLEBBV)` resource or CA-TOP SECRET to define and protect an `IBMFAC(BOOLEBBV)` resource.
- By using a `FACILITY(BOOLEBBV)` or `IBMFAC(BOOLEBBV)` resource, sessions can be further restricted to be used only at specifically authorized terminals or only with MAINVIEW Alternate Access.

  This type of customization eliminates any potential security exposure resulting from removing the requirement for manual entry of a clear text password.

This chapter discusses the security issues concerning MAINVIEW Alternate Access sessions and how to configure CA-ACF2 or RACF to support the `FACILITY(BOOLEBBV)` resource or CA-TOP SECRET to support an `IBMFAC(BOOLEBBV)` resource in the following sections:

- "Understanding AutoLogon Session Security Issues"
- "Defining Additional Security for Terminals" on page 414
- "Defining Additional Security for Applications" on page 415
- "Configuring CA-ACF2 for MAINVIEW Alternate Access" on page 416
- "Configuring RACF for MAINVIEW Alternate Access" on page 421
- "Configuring CA-TOP SECRET for MAINVIEW Alternate Access" on page 423

Understanding AutoLogon Session Security Issues

AutoLogon sessions sign on a terminal directly to a product service at terminal address space (TAS) initialization, without requiring user intervention to enter a user ID or password.

AutoLogon sessions can be passed through to an application because the OPT( ) subparameter is passed at session initialization. For a session to initialize properly to support the OPT( ) subparameter, user ID and password (if required) values must be defined as startup parameters for the session. Because AutoLogon sessions require user ID and password values as startup parameters, security considerations dictate special procedures to prevent the unnecessary exposure of these values.

There are two ways to provide the user ID and a password at AutoLogon session initialization:

- in the START command
- in a BBVTAS*xx* member

When the `FACILITY(BOOLEBBV)` or `IBMFAC(BOOLEBBV)` resource has not been defined to your ESM, the user ID and password must be manually specified in clear text in either the

START command or the BBVTAS*xx* member. Specifying the user ID and a password in clear text presents three potential security problems:

- The user ID and password are visible on the console when specified in a START command.
- The entire START command may be logged to SYSLOG when issued, making the user ID and password values visible in SYSLOG.
- The user ID and password are visible in a BBVTAS*xx* member, which may be accessible by many other individuals.

To avoid the problem of clear-text password exposure for user IDs that are to be used with AutoLogon sessions, BMC Software recommends the following two solutions:

- Define all BBVTAS*xx* members containing user ID or password values in a read-secured data set. This solution additionally requires that
  - a separate TAS procedure be defined (see Step 6: Define a Startup Procedure for a TAS, in the *MAINVIEW Alternate Access Implementation and User Guide*) that concatenates the read-secured data set to the BBVPARM DD statement in the procedure
  - the user ID to be used by the TAS when it is started be given access to this read-secured data set
- Define the resource `FACILITY(BOOLEBBV)` to ACF2 or RACF or the `IBMFAC(BOOLEBBV)` resource to TOP SECRET to eliminate the requirement to code clear text passwords for IDs that are authorized to access this resource.

Defining Additional Security for Terminals

MAINVIEW Alternate Access passes environmental information, such as the `TERMID=` parameter, to the ESM through RACROUTE to enable the installation to further restrict access.

The `TERMID=` parameter is an optional parameter that is specified in the RACROUTE VERIFY (signon) parameter list. The `TERMID=` is the VTAM LU or EXCP terminal address from which a MAINVIEW Alternate Access logon is being attempted. If the terminal is protected and the user ID is not allowed access from the terminal, the logon terminates after an error message is issued.

For RACF and CA-TOP SECRET, all VTAM LUs or addresses are protected using class `TERMINAL`. For CA-ACF2, terminal access authorization is handled through standard CA-ACF2 terminal/source group restrictions.

Specific examples for defining resources in class `TERMINAL` are provided in the following sections:

- “Customizing Class TERMINAL Access Authorization for CA-ACF2” on page 419
- “Customizing Class TERMINAL Access Authorization for RACF” on page 422
- “Customizing Class TERMINAL Access Authorization for CA-TOP SECRET” on page 424

Defining Additional Security for Applications

MAINVIEW Alternate Access passes environmental information, such as the `APPL=` parameter, to the ESM through RACROUTE to enable the installation to further restrict access. To use application names to control access to MAINVIEW Alternate Access, each application name must be defined as a resource in class `APPL`.

There are two instances where MAINVIEW Alternate Access uses resources in SAF class `APPL` to control access to MAINVIEW Alternate Access:

- The first instance is when the user ID attempting MAINVIEW Alternate Access logon is validated. This instance is intended to offer protection at the application level. The `APPL=` parameter is an optional parameter that is specified in the RACROUTE VERIFY (signon) parameter list. In this case, an application name of BBVLOGON is passed as the `APPL=` parameter when MAINVIEW Alternate Access validates the user ID. The security system uses this parameter automatically to validate application access.

  If the installation wants to restrict MAINVIEW Alternate Access to only a certain subset of users, the resource entity name `BBVLOGON` in SAF resource class `APPL` may be defined. The ESM ensures, as part of user ID validation, that the user ID has at least read access to the `BBVLOGON` resource in class `APPL`. For CA-ACF2, SAF resource class `APPL` is usually mapped to a unique generalized resource rule type; the default for CA-ACF2 6.*x* is `TYPE(APL)`.

- The second instance is designed to offer protection at MAINVIEW for OS/390 node name level. Once the user ID has been validated (and access to the BBVLOGON application validated), BBV explicitly invokes the ESM to authorize access to a resource in SAF class `APPL` whose resource entity name is the VTAM major node name.

  By controlling access to the VTAM major node name, the installation can, for example, allow a user to log on to MAINVIEW Alternate Access on specific MVS images only, or to log on to a test version of MAINVIEW Alternate Access, but not to a production version. For these examples to function as illustrated, the VTAM major node names used for MAINVIEW Alternate Access must be unique across different MVS images or between production and test versions.

  Note: The VTAM major node name referred to here is the value specified for the `APPLID=` parameter in the BBVLAS*xx* member in *hilevel.sysid*UBBPARM.

When the MAINVIEW Alternate Access session is not using VTAM, but is instead an EXCP session, the constant, `BBVEXCP`, is used for the resource entity name instead of a VTAM major node name. Specific examples for defining resources in class `APPL` are provided in the following sections:

- "Customizing Class APPL Access Authorization for CA-ACF2" on page 419
- "Customizing Class APPL Access Authorization for RACF" on page 422
- "Customizing Class APPL Access Authorization for CA-TOP SECRET" on page 425

Configuring CA-ACF2 for MAINVIEW Alternate Access

The following customization is required to

- define LOGONIDs for appropriate MAINVIEW Alternate Access started tasks and a `FACILITY(BOOLEBBV)` resource
- allow access to the resource for LOGONIDs associated with user IDs to be used in AutoLogon sessions

Contact your CA-ACF2 system programmer or security administrator for help.

1. Define a LOGONID for the BBVTAS started task. This LOGONID is used during the initial phase of startup. The user's LOGONID is used for the session once the session initializes; therefore, users do not require additional or separate LOGONIDs to use MAINVIEW Alternate Access.

   Note: The started task LOGONID requires access to the BMC Software product data sets.

   Define the LOGONID with the following attributes:

   ```
   DUMPAUTH
   STC
   RESTRICT
   SOURCE(STCINRDR)
   ```

2. This optional step requires an IPL of your system. This step may not be applicable to your site.

   If you use the ACF2 started task validation exit to assign a LOGONID to a started task:

   a. Add the LOGONID for the BBVTAS started task to the exit.

   b. Assemble and relink the exit.

   c. IPL your system to activate the revised exit.

3. Repeat the previous two steps for the BBVLAS started task, if necessary.

4. For CA-ACF2 5.2, update your CA-ACF2 SAFPROT list to include a control point for BBVTLOAD.

   The following example shows a set of TSO commands to perform this update:

   ```
   ACF
   SET CONTROL(GSO)
   INSERT SAFPROT.BBV CLASSES(-)  CNTLPTS(-) SUBSYS(BBVTLOAD)
   END
   ```

   For CA-ACF2 6.*x*, define a SAFDEF record for BBVTLOAD.

   The following example shows a set of TSO commands to perform this update:

   ```
   ACF
   SET CONTROL(GSO)
   INSERT SAFDEF.BBVTLOAD ID(BBVTLOAD) +
          MODE(GLOBAL) REP +
          RACROUTE(SUBSYS=BBVTLOAD,REQSTOR=-)
   END
   ```

5. For CA-ACF2 5.2, perform a CA-ACF2 refresh of the SAFPROT list.

   Use the following operator command to refresh the SAFPROT list:

   ```
   F ACF2,REFRESH(SAFPROT)
   ```

   For CA-ACF2 6.*x*, perform a CA-ACF2 refresh of the SAFDEF records.

   Use the following operator command to refresh all the SAFDEF records:

   ```
   F ACF2,REFRESH(SAFDEF)
   ```

6. For CA-ACF2 5.2, optionally define a mapping between the SAF resource class `FACILITY` and a CA-ACF2 generalized resource rule of any type. If you define this mapping on CA-ACF2 5.2, you must update the SAFMAPS GSO record and refresh the in-storage SAFMAPS table.

   a. The following example shows a set of TSO commands to update the SAFMAPS GSO record for CA-ACF2 5.2, assuming you selected the generalized resource rule type `FAC`:

      ```
      ACF
      SET CONTROL(GSO)
      CHANGE SAFMAPS ADD MAPS(FAC/FACILITY)
      END
      ```

   b. Use the following operator command to refresh the in-storage SAFMAPS table for CA-ACF2 5.2:

      ```
      F ACF2,REFRESH(SAFMAPS)
      ```

      For CA-ACF2 6.*x*, the SAF resource class `FACILITY` is mapped automatically to the generalized resource rule type `FAC`, so no action is required.

7. Some MVS components may require that the rules for the rule type selected for use with SAF class `FACILITY` be resident. If you need to perform this customization:

   - And you have already migrated to the INFODIR record for either CA-ACF2 6.*x* or for CA-ACF2 5.2, update the INFODIR GSO record, refresh the INFODIR information in storage, and build the in-storage directory for the selected rule type.

     a. The following example shows a set of TSO commands to add rule type `FAC` to the INFODIR GSO record:

        ```
        ACF
        SET CONTROL(GSO)
        CHANGE INFODIR ADD TYPES(R-RFAC)
        END
        ```

     b. Use the following operator command to refresh the INFODIR data:

        ```
        F ACF2,REFRESH(INFODIR)
        ```

     c. Use the following operator command to build the in-storage directory for the rule type `FAC`:

        ```
        F ACF2,REBUILD(FAC)
        ```

- And your CA-ACF2 5.2 configuration uses the RESDIR GSO record instead of the INFODIR GSO record, update the RESDIR GSO record and refresh the RESDIR information in storage for the selected rule type. This will add rules of type `FAC` to the list from which in-storage directories are built at CA-ACF2 initialization.

  a. The following example shows a set of TSO commands to add rule type `FAC` to the RESDIR GSO record:

     ```
     CHANGE RESDIR ADD TYPES(R-FAC)
     ```

  b. Use the following operator command to refresh the RESDIR data:

     ```
     F ACF2,REFRESH(RESDIR)
     ```

8. Define a `BOOLEBBV` rule of type SAF or the type selected in Step 7 on page 417 and permit access to the rule for each LOGONID to be used with an AutoLogon session. This step allows LOGONIDs to skip the requirement to enter a clear text password manually.

   a. The following example shows a set of TSO commands to add a `BOOLEBBV` rule to the rule type `FAC`:

      ```
      ACF
      SET RESOURCE(FAC)
      COMPILE * LIST STORE
      $KEY(BOOLEBBV) TYPE(FAC)
        UID(UID string) ALLOW
        UID(-) PREVENT
      END
      END
      ```

      The following example shows how these commands might be defined for specific LOGONIDs:

      ```
      ACF
      SET RESOURCE(FAC)
      COMPILE * LIST STORE
      $KEY(BOOLEBBV) TYPE(FAC)
      $USERDATA( RESOURCE RULE TO ALLOW BBV AUTOLOGON )
        UID(152911131) ALLOW
        UID(155311115) ALLOW
        UID(155311117) ALLOW
        UID(155311119) ALLOW
        UID(333333333) ALLOW
        UID(-) PREVENT
      END
      END
      ```

   b. If the rule type is defined as resident, use the following operator command to rebuild the in-storage directory for the rule type `FAC`:

      ```
      F ACF2,REBUILD(FAC)
      ```

Customizing Class TERMINAL Access Authorization for CA-ACF2

ACF2 support of the `TERMID=` parameter in the RACROUTE VERIFY parameter list is handled by standard CA-ACF2 source and source group restriction.

To authorize the LOGONID for system entry using MAINVIEW Alternate Access at a specific terminal, that terminal's VTAM LU name or EXCP address must appear in a source group whose name is specified by the SOURCE attribute for the LOGONID.

Customizing Class APPL Access Authorization for CA-ACF2

For CA-ACF2 support of MAINVIEW Alternate Access application authorization using the `APPL=` parameter in the RACROUTE VERIFY parameter list and VTAM major node name access authorization, review the following steps and perform any actions necessary for your installation:

1. For CA-ACF2 6.0 and later, you must define an additional SAFDEF record. The following TSO commands may be used to define the new record:

   ```
   ACF
   SET CONTROL(GSO)
   INSERT SAFDEF.BBVTLOAD ID(BBVTAPPL) MODE(GLOBAL) REP +
          RB(BBVTLOAD) PROGRAM(BBVTLOAD) +
          RACROUTE(REQUEST=AUTH,CLASS=APPL)
   END
   ```

   Then, issue the following operator command to refresh the SAF definitions in storage:

   ```
   F ACF2,REFRESH(SAFDEF)
   ```

2. Determine the generalized resource rule type that SAF resource class `APPL` has been mapped to:

   – For CA-ACF2 5.2, this is defined by the SAFMAPS GSO records
   – For CA-ACF2 6.0 and later, this is defined by a CLASMAP GSO record

   By default, SAF resource class `APPL` is mapped to resource type SAF. You may map class `APPL` to any generalized resource rule type. If you use a rule type other than SAF, you must add an entry to the SAFMAPS GSO record for CA-ACF2 5.2 or define an additional CLASMAP GSO record for CA-ACF2 6.0 and later.

   Note: In the subsequent examples, the assumption is made that the SAF resource class `APPL` has already been mapped to the generalized resource rule type `APL`.

3. For CA-ACF2 5.2, if desired, update the SAFMAPS GSO record to map resource class `APPL` to rule type APL, for example.

   The following TSO commands may be used to update the existing SAFMAPS record:

   ```
   ACF
   SET CONTROL(GSO)
   CHANGE SAFMAPS ADD MAPS(APL/APPL)
   END
   ```

   Then, issue the following operator command to refresh the SAFMAPS table in storage:

   ```
   F ACF2,REFRESH(SAFMAPS)
   ```

4. For CA-ACF2 6.*x*, if desired, add a new CLASMAP GSO record that maps resource class `APPL` to rule type APL, for example. The following TSO commands may be used to define the new record:

   ```
   ACF
   SET CONTROL(GSO)
   INSERT CLASMAP.APPL RSRCTYPE(APL) RESOURCE(APPL) ENTITYLN(8)
   END
   ```

   Then, issue the following operator command to refresh the external CLASMAP table in storage:

   ```
   F ACF2,REFRESH(CLASMAP)
   ```

5. Define a rule for resource `BBVLOGON` in type APL (for example) and specify READ(ALLOW) for each LOGONID that needs to log on to MAINVIEW Alternate Access. For example, you may use the following sample TSO commands:

   ```
   ACF
   SET RESOURCE(APL)
   COMPILE * LIST STORE
   $KEY(BBVLOGON) TYPE(APL)
    UID(-)        PREVENT
    UID(bbv-user) ALLOW
   END
   ```

6. For EXCP sessions only, define a rule for resource `BBVEXCP` in type APL (for example) and specify READ(ALLOW) for each LOGONID that needs to log on to MAINVIEW Alternate Access. For example, you may use the following sample TSO commands:

   ```
   ACF
   SET RESOURCE(APL)
   COMPILE * LIST STORE
   $KEY(BBVEXCP)  TYPE(APL)
    UID(-)        PREVENT
    UID(bbv-user) ALLOW
   END
   ```

7. For each VTAM major node name to be used with MAINVIEW Alternate Access, define a rule in type APL (for example) whose resource name matches the VTAM major node name and specify READ(ALLOW) for each LOGONID that needs to log on to MAINVIEW Alternate Access using a VTAM terminal. For example, you may use the following sample TSO commands:

   ```
   ACF
   SET RESOURCE(APL)
   COMPILE * LIST STORE
   $KEY(lu-name)  TYPE(APL)
    UID(-)        PREVENT
    UID(bbv-user) ALLOW
   END
   ```

8. Rebuild the resident CA-ACF2 resource directory for resource type APL (for example), if necessary. Use the following sample operator command:

   ```
   F ACF2,REBUILD(APL)
   ```

Configuring RACF for MAINVIEW Alternate Access

For RACF support of the `FACILITY(BOOLEBBV)` resource, the following customization is required. Contact your RACF system programmer or security administrator for help.

1. Define a generalized resource profile in class `FACILITY` with an entity name of `BOOLEBBV`. The universal access authority of this entity should be `NONE`.

   The following is a sample RACF (TSO) command to add a `BOOLEBBV` entity to class `FACILITY`:

```
RDEFINE FACILITY  (BOOLEBBV)  UACC(NONE)
```

Important

If you have previously defined a generic profile that covers entity name `BOOLEBBV` but does not specify `NONE` as the universal access, you must perform this step. Unless a universal access of `NONE` is specified, any user ID can sign on through MAINVIEW Alternate Access without specifying a password.

2. Permit each USERID to be used with an AutoLogon session to have READ access to resource `FACILITY(BOOLEBBV)`.

   The following example shows a RACF (TSO) command to permit each USERID:

```
PERMIT BOOLEBBV CLASS(FACILITY) ID(userID) ACCESS(READ)
```

3. List the `BOOLEBBV` profile to ensure that the access list is correct and complete.

   Use the following sample RACF (TSO) command to list the access list:

```
RLIST FACILITY BOOLEBBV ALL
```

4. If necessary, activate the `FACILITY` resource class.

   Use the following sample RACF (TSO) command to activate `FACILITY`:

```
SETROPTS CLASSACT(FACILITY)
```

5. If necessary, refresh any in-storage generic or RACLISTed profiles associated with the `FACILITY` resource class.

   – Use the following sample RACF (TSO) command to refresh in-storage generic profiles:

```
SETROPTS REFRESH GENERIC(FACILITY)
```

   – Use the following sample RACF (TSO) command to refresh in-storage RACLISTed profiles:

```
SETROPTS REFRESH RACLIST(FACILITY)
```

Customizing Class TERMINAL Access Authorization for RACF

For RACF support of terminal access authorization through the `TERMID=` parameter in the RACROUTE VERIFY parameter list, review the following steps and perform any actions necessary for your installation:

1. Define the terminal ID (VTAM LU name or EXCP terminal address) as a protected resource to RACF in class `TERMINAL` by using the following sample command:

   ```
   RDEFINE TERMINAL (terminal-id) UACC(NONE)
   ```

2. Permit each USERID that can log on from this terminal (LUname or address) using the following sample command:

   ```
   PERMIT terminal-id CLASS(TERMINAL) ID(userid) ACCESS(READ)
   ```

3. List the profile to ensure that the access list is correct and complete using the following sample command:

   ```
   RLIST TERMINAL terminal-id ALL
   ```

4. If necessary, activate the `TERMINAL` resource class by using the following sample command:

   ```
   SETROPTS CLASSACT(TERMINAL)
   ```

5. If necessary, refresh the in-storage RACLISTed profiles for the `TERMINAL` class by using the following sample command:

   ```
   SETROPTS REFRESH RACLIST(TERMINAL)
   ```

Customizing Class APPL Access Authorization for RACF

For RACF support of MAINVIEW Alternate Access application access authorization through the `APPL=` parameter in the RACROUTE VERIFY parameter list or through the VTAM major node name, review the following steps and perform any actions necessary for your installation:

1. Define the profile BBVLOGON in class `APPL` to RACF using the following sample command:

   ```
   RDEFINE APPL (BBVLOGON) UACC(NONE)
   ```

2. If EXCP terminal sessions are to be used with MAINVIEW Alternate Access, also define the profile BBVEXCP in class `APPL` to RACF using the following sample command:

   ```
   RDEFINE APPL (BBVEXCP)  UACC(NONE)
   ```

3. Define a profile to RACF in class `APPL` for each VTAM major node name to be used with MAINVIEW Alternate Access using the following sample command:

   ```
   RDEFINE APPL (major-node-name) UACC(NONE)
   ```

4. Permit each USERID that needs to log on to MAINVIEW Alternate Access to have READ access to the `BBVLOGON` resource in class `APPL`.

   For example, you may use the following sample command:

   ```
   PERMIT BBVLOGON CLASS(APPL) ID(userid) ACCESS(READ)
   ```

5. Permit each USERID that needs to log on to MAINVIEW Alternate Access using an EXCP session to have READ access to the `BBVEXCP` resource in class `APPL`.

   For example, you may use the following sample command:

   ```
   PERMIT BBVEXCP CLASS(APPL) ID(userid) ACCESS(READ)
   ```

6. Permit each USERID that needs to log on to MAINVIEW Alternate Access using a VTAM terminal to have READ access to the profile in class `APPL` whose name matches the major node name to be used by MAINVIEW Alternate Access.

   For example, you may use the following sample command:

   ```
   PERMIT major-node-name CLASS(APPL) ID(userid) ACCESS(READ)
   ```

7. List the profiles to ensure that the access list is correct and complete using the following sample commands:

   ```
   RLIST APPL BBVLOGON ALL
   RLIST APPL BBVEXCP ALL
   RLIST APPL major-node-name ALL
   ```

8. If necessary, activate the `APPL` resource class by using the following sample command:

   ```
   SETROPTS CLASSACT(APPL)
   ```

9. If necessary, refresh the in-storage RACLISTed profiles for the `APPL` class by using the following sample command:

   ```
   SETROPTS REFRESH RACLIST(APPL)
   ```

Configuring CA-TOP SECRET for MAINVIEW Alternate Access

For CA-TOP SECRET (TSS) support of the `IBMFAC(BOOLEBBV)` resource, the following customization is required. Contact your CA-TOP SECRET system programmer or security administrator for help.

1. Create a separate TSS facility for MAINVIEW Alternate Access.

   Use the following sample TSS (TSO) commands and TSSPARM updates to create a separate CA-TOP SECRET facility:

   a. Create a separate Facility Matrix entry for the TAS by renaming an existing entry in the TSS Facility Matrix. You can model this entry after the TSO Facility Matrix entry, except that `NOTSOC` must be specified. The LAS can initialize properly with the standard STC Facility Matrix entry defaults, so a separate facility usually is not needed for the LAS.

      Use the following sample TSSPARM statements to rename an existing entry:

      ```
      FAC(USER8=NAME=BBV)
      FAC(BBVTAS=PGM=BBV,ACTIVE,NOTSOC)
      FAC(BBVTAS=SHRPRF,NOASUBM,ABEND,SUAS,NOXDEF)
      FAC(BBVTAS=LUMSG,STMSG,SIGN(s),INSTDATA)
      FAC(BBVTAS=NORNDPW,AUTHINIT,NOPROMPT,NOAUDIT)
      FAC(BBVTAS=RES,WARNPW,LCFCMD,NOTRACE)
      FAC(BBVTAS=DORMPW,NONPWR,NOIMSXTND,MSGLC)
      FAC(BBVTAS=MODE=FAIL)
      ```

b. After an IPL or TSS restart with the new MAINVIEW Alternate Access Facility Matrix entry in place, define interconnections between this Facility Matrix entry, the BBVTAS started task, and its default STC ACID.

   The following are sample TSS (TSO) commands to define these interconnections:

```
TSS  CREATE(BBVTASA)  NAME('bbvtas stc acid') +
  FAC(STC)  PAS(NOPW,0)  DEPT(department-acid) +
  MASTFAC(BBV)

TSS  ADD(STC)  PROC(BBVTAS)  ACID(BBVTASA)
```

c. If you do not have standard STC Facility Matrix entry defaults, as discussed in Step a on page 423, you must also define the LAS ACID with MASTFAC specifying the new MAINVIEW Alternate Access entry.

   The following are sample TSS (TSO) commands to define these interconnections:

```
TSS  CREATE(BBVLASA)  NAME('bbvlas stc acid') +
  FAC(STC)  PAS(NOPW,0)  DEPT(department-acid) +
  MASTFAC(BBV)

TSS  ADD(STC)  PROC(BBVLAS)  ACID(BBVLASA)
```

2. Add the `BOOLEBBV` resource to the class `IBMFAC`.

   The following is a sample TSS (TSO) command to add a `BOOLEBBV` resource to class `IBMFAC`:

```
TSS  ADDTO(owner-acid)  IBMFAC(BOOLEBBV)
```

3. Permit each ACID to be used with an AutoLogon session to have READ access to resource `IBMFAC(BOOLEBBV)`.

   Use the following sample TSS (TSO) command to permit ACID with READ access:

```
TSS  PERMIT(ACID)  IBMFAC(BOOLEBBV)  ACCESS(READ)
```

Customizing Class TERMINAL Access Authorization for CA-TOP SECRET

For CA-TOP SECRET support of terminal access authorization using the `TERMID=` parameter in the RACROUTE VERIFY parameter list, review the following steps and perform any actions necessary for your installation:

1. Define the terminal ID (VTAM LU name or EXCP terminal address) as a protected resource to CA-TOP SECRET in class `TERMINAL` by using the following sample command:

```
TSS ADDTO(owner-acid) TERMINAL(terminal-id)
```

2. Permit each ACID that can log on from this terminal (LU name or address) using the following sample command:

```
TSS PERMIT(acid) TERMINAL(terminal-id) ACCESS(READ)
```

Customizing Class APPL Access Authorization for CA-TOP SECRET

For CA-TOP SECRET support of MAINVIEW Alternate Access application authorization using the `APPL=` parameter in the RACROUTE VERIFY parameter list and VTAM major node name access authorization, review the following steps and perform any actions necessary for your installation:

1. Define the resource `BBVLOGON` in class `APPL` to CA-TOP SECRET using the following sample command:

   ```
   TSS ADDTO(owner-acid) APPL(BBVLOGON)
   ```

2. If EXCP terminal sessions are to be used with MAINVIEW Alternate Access, also define the resource `BBVEXCP` in class `APPL` to CA-TOP SECRET using the following sample command:

   ```
   TSS ADDTO(owner-acid) APPL(BBVEXCP)
   ```

3. Define a resource to CA-TOP SECRET in class `APPL` for each VTAM major node name to be used with MAINVIEW Alternate Access using the following sample command:

   ```
   TSS ADDTO(owner-acid) APPL(major-node-name)
   ```

4. Permit each ACID that needs to log on to MAINVIEW Alternate Access to have READ access to the `BBVLOGON` resource in class `APPL`.

   For example, you may use the following sample command:

   ```
   TSS PERMIT(acid) APPL(BBVLOGON) ACCESS(READ)
   ```

5. Permit each ACID that needs to log on to MAINVIEW Alternate Access using an EXCP session to have READ access to the `BBVEXCP` resource in class `APPL`.

   For example, you may use the following sample command:

   ```
   TSS PERMIT(acid) APPL(BBVEXCP) ACCESS(READ)
   ```

6. Permit each ACID that needs to log on to MAINVIEW Alternate Access using a VTAM terminal to have READ access to the resource in class APPL whose name matches the major node name to be used by MAINVIEW Alternate Access.

   For example, you may use the following sample command:

   ```
   TSS PERMIT(acid) APPL(major-node-name) ACCESS(READ)
   ```

Part 5. Appendixes

The appendixes provide additional information to help you use MAINVIEW security.

Appendix A. BMC Software Proprietary Security 429
Migrating from BMC Software Proprietary Security 429
Using BMC Software Proprietary Security 431
RACF Security Requirements 431
Authorizing Users 432
Verifying User Command Authorization 435
BBPARM Authorization Member Parameters 438
USERID Parameters for the BBI-SS PAS Environment 438
USERID Parameters for MAINVIEW AutoOPERATOR Only 439
USERID Parameters for MAINVIEW for CICS, MAINVIEW for DB2, and MAINVIEW for DBCTL 440
USERID Parameters for MAINVIEW AutoOPERATOR, MAINVIEW for CICS, MAINVIEW for DB2, and MAINVIEW for DBCTL 441
USERID Parameters for MAINVIEW for DB2 Only 442

Appendix B. Basic Security Problem Determination 443
Before You Contact Customer Support 443
MAINVIEW AutoOPERATOR Advanced Security 445
MAINVIEW AutoOPERATOR and MAINVIEW SYSPROG Services 446
MAINVIEW for CICS 447

Appendix C. Default Parameters for Enhanced Security 449
Default Parameter Definitions 449
Manually Creating a Parameter Definition Member 449
Understanding Parameter Definitions 450
Default Class Definitions 459
Changing and Adding Classes 459
Manually Creating a Class Definition Member 459
Understanding Class Definitions 459
Understanding the NEXT= Parameter 472
Transformation List Values for the INTENT= Parameter 473

Index 475

Appendix A. BMC Software Proprietary Security

This section describes how to:

- Migrate from BMC Software proprietary security to security using an external security manager (ESM)
- Use BMC Software proprietary security

Migrating from BMC Software Proprietary Security

Previously, you could implement BMC Software product security by storing default and customized access profiles in the BBPARM members $GENERIC, $USERID, and $RMTID for the following products:

- MAINVIEW AutoOPERATOR
- MAINVIEW FOCAL POINT
- MAINVIEW for CICS
- MAINVIEW for DB2
- MAINVIEW for DBCTL
- MAINVIEW for IMS Online
- MAINVIEW for OS/390

This is called BMC Software proprietary security.

To secure these product resources using your ESM, use the following table. It lists the $USERID parameter and its corresponding product resource name you can use for ESM authorization. To use the table, find the $USERID parameter in the first column (listed alphabetically) and the option, if applicable, in the second column. The resource name for your ESM is in the third column.

Notice that, for some resources, such as PARMAUTH=[R|U|N], if you originally specified PARMAUTH=U, there are two resource names that must be secured:

- *prefix*.*ssid*.AAO.*target*.PARMREAD
- *prefix*.*ssid*.AAO.*target*.PARMUPD

$USERID parameters	Option	Resource name
AUTHJOB=(name|*)		*prefix.ssid*.BBI.*target*.ACCESS
BBICMD=[Y|N]		*prefix.ssid*.BBI.*target*.BBICMD
CICSTRAN=[Y|N]		*prefix.ssid*.AAO.*target*.CICSTRAN
DB2CMD=[Y|N]		*prefix.ssid*..DMR.*target*.DB2CMD
DB2SQL=[ALL|NONE|AUTHID]	DB2SQL=ALL	*prefix.ssid*.DMR.*target*.DB2SQLAL
	DB2SQL=AUTHID	*prefix.ssid*.DMR.*target*.DB2SQLAU
EXEC=[Y|N]		*prefix.ssid*.AAO.*target*.EXEC
IMSCMD=[Y|N]		*prefix.ssid*.AAO.*target*.IMSCMD
IMSMSG=[Y|N]		*prefix.ssid*.AAO.*target*.IMSMSG
IMSTRAN=[Y|N]		*prefix.ssid*.AAO.*target*.IMSTRAN
JRNLMSG=[Y|N]		*prefix.ssid*.BBI.*target*.JRNLMSG
MVSCMD=[Y|N]		*prefix.ssid*.AAO.*target*.MVSCMD
PARMAUTH=[R|U|N]	PARMAUTH=R	*prefix.ssid*.AAO.*target*.PARMREAD
	PARMAUTH=U	*prefix.ssid*.AAO.*target*.PARMREAD and *prefix.ssid*.AAO.*target*.PARM
PMACC=[(A...Z)|*|#]	PMACC=A	*prefix.ssid*.BBI.*target*.PMACCA
	PMACC=B	*prefix.ssid*.BBI.*target*.PMACCB
	PMACC=C	*prefix.ssid*.BBI.*target*.PMACCC
	PMACC=#	*prefix.ssid*.BBI.*target*.PMACC#
RESAUTH=[Y|N]		*prefix.ssid*.AAO.*target*.RESAUTH
RULEAUTH=[R|U|N]	RULEAUTH=R	*prefix.ssid*.AAO.*target*.RULEREAD
	RULEAUTH=U	*prefix.ssid*.AAO.*target*.RULEREAD and *prefix.ssid*.AAO.*target*.RULEUPD
TERMINAL=(xxx)		*prefix.ssid*..BBI.TERMxxx
TRACE=[S|D|N|ALL] **Note:** An alias of DB2TRACE is also accepted.	TRACE=S	*prefix.ssid*.BBI.*target*.TRACE.S
	TRACE=D	*prefix.ssid*.BBI.*target*.TRACE.D
	TRACE=ALL	*prefix.ssid*.BBI.*target*.TRACE.ALL
	TRACE=D+	*prefix.ssid*.DMR.*target*.DB2TRACE. GENERIC
TRALLOC=[Y|N]		*prefix.ssid*.BBI.*target*.TRALLOC

Using BMC Software Proprietary Security

Instead of using these sections to install BMC Software proprietary security, you may decide to secure your BMC Software products with the external security manager (ESM) installed at your site. This is documented in Part 2, "Basic Security" on page 7, and Part 3, "Enhanced Security" on page 127.

You can use BMC Software proprietary security to:

- Define BBI-SS PAS target system command and product application authorization for users
- Verify user command authorization with the AMSECU utility

RACF Security Requirements

The following RACF permissions are required for the:

- BBI-SS PAS

  The BBI-SS PAS started task must have RACF permission for:

  – READ or EXECUTE access for the BBLINK data sets

    Similar access requirements for other load libraries may be required depending on the product(s) to be initialized; for example, DSNLOAD if MAINVIEW for DB2 is present.

  – UPDATE access for BBIVARS, BBIJRNL1, BBIJRNL2, BBIIMAG1, BBIIMAG2, BBPARM, and BBPROC data sets

  – (MAINVIEW for CICS, and MAINVIEW for DB2 only) Dynamic allocation of trace log data sets by the BBI-SS PAS may require authorization

- TS

  The TSO user must have RACF permission for:

  – READ or EXECUTE access for the LINKLIB data set

  – READ access for the BBMLIB and BBPLIB data sets

  – UPDATE access for the BBISPRNT, BBPROF, BBIJRNLL, and BBIIMAGL data sets

  – Some MAINVIEW options executing MAINVIEW programs

Authorizing Users

Users must be authorized for each target system and its associated BBI-SS PAS to use:

- Specific product applications
- BBI control commands
- Functions that issue specific types of commands to the operating system or subsystem functions that send messages to the BBI-SS PAS Journal
- MAINVIEW AutoOPERATOR EXECs

You can specify which target systems can be accessed and which actions can be performed on each system. For example, most users can be allowed to look at target system information, but only a few can issue commands.

Default user authorization is defined in BBPARM members $GENERIC, $USERID, and $RMTID. You may want to review the default options in these members to help you set up specific members for individual user authorization. $GENERIC may be used to provide the same security access to multiple users without specifying multiple user ID members. Use the sample BBPARM member USERID as a model for your specific user members. The sections that follow describe how the BBPARM user authorization members are used and how commands are verified.

Specifying Target System Access Authority

User access to a target system is through a BBI-SS PAS and its associated TS. If a TS request is for a target connected to its BBI-SS PAS, the request is for a local target system. If the request is for a target connected to a BBI-SS PAS that is not associated with the requesting TS, the request is for a remote target system. For example, in Figure 27, a request from USER1 for DB2A is issued to its local BBI-SS PAS. A request from USER1 for DB2B is issued to its local BBI-SS PAS first. The local BBI-SS PAS then sends it to the remote BBI-SS PAS that manages DB2B.

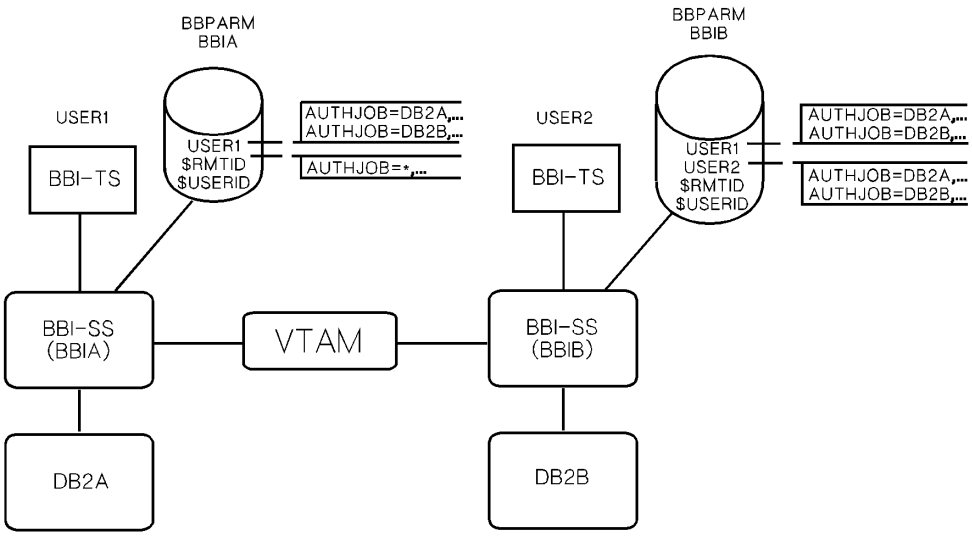

Figure 27. User Authorization

In Figure 27, for USER1 to access DB2A (target managed by the BBI-SS PAS local to the USER1 TS) and DB2B (target managed by the BBI-SS PAS remote to the USER1 TS), local and remote target access authority must be specified in a member of the BBI-SS PAS BBPARM data set. Authorization can be defined:

- In a member that has the same name as the user ID
- In a generic authorization member, $GENERIC, that references a specific user ID for a group of users
- In a default authorization member:
  - $RMTID for all remote users
  - $USERID for all local users

For example, if USER1 is to have local authorization to the BBIA subsystem, a USER1 or $USERID member of BBPARM BBIA can be created. If USER1 is to have remote authorization to the BBIB subsystem in addition to local authorization, a USER1 or $RMTID member of BBPARM BBIB must be created.

If there is no authorization member for a specific user ID in the BBI-SS PAS BBPARM remote to that user, the default $RMTID authorization is used.

For example, in Figure 27:

- DB2A is a target system that is managed by a BBI-SS PAS (BBIA) remote to USER2.
- USER2 is authorized in its local BBI-SS PAS (BBIB) BBPARM member USER2 to access DB2A.
- There is no specific member in the BBI-SS PAS (BBIA) BBPARM remote to USER2 that allows USER2 to access DB2A.
- However, USER2 can access DB2A because the default authorization member ($RMTID) for all users remote to BBI-SS PAS BBIA authorizes access to all DB2 targets (`AUTHJOB=*`).

Target system authorization can be specified in BBPARM members USERID, $USERID, and $RMTID as follows:

```
AUTHJOB=JRNLMSG=N|Y
```

The keywords are listed in Table 59.

Table 59. Target Authorization Keywords for BBPARM User ID Members

Keyword	Description
AUTHJOB=*|name	Specifies a generic target system group (`AUTHJOB=CICS*`), all targets (`AUTHJOB=*`), or a specific target (`AUTHJOB=CICS1`). The specified target must be defined in the BBPARM member BBIJNT00.
`BBICMD=N|Y`	Authorizes the user to issue BBI control commands.
`JRNLMSG=N|Y`	Authorizes the user to send messages to the BBI-SS PAS Journal log.

BBPARM member USERID is a sample user authorization member that can be used to create authorization for a specific user ID. Because $USERID and $RMTID members define default authorization for all local and remote users, these members should have limited authorization for security requirements.

Modifying Default Authorization for Local Users ($USERID)

$USERID specifies the default authorization for local users. When a TS request is issued for a local target, the local BBI-SS PAS searches BBPARM for a user ID authorization member that matches the TS user ID. If there is no match and a $GENERIC member has been specified, it searches for a generic name match. If there is still no match or a $GENERIC member was not specified, the default authorization specified in $USERID is used. You can modify $USERID to your requirements.

Modifying Default Authorization for Remote Users ($RMTID)

$RMTID specifies the default authorization for remote users. When a TS is issued for a remote target, the local BBI-SS PAS and the remote BBI-SS PAS search BBPARM for a user authorization member that matches the TS user ID. If there is no match and a $GENERIC member was specified, it searches for a generic name match. If there is still no match or no $GENERIC member was specified, the $RMTID member is used. You can modify $RMTID to your requirements.

Authorizing Individual Users (USERID)

USERID is a sample that is distributed with the MAINVIEW product libraries. This member can be used to create a unique BBPARM member for a user's logon ID. User IDs can be one to seven alphanumeric characters.

For every user requiring special authorization beyond the defaults specified in a $GENERIC member or in $USERID or $RMTID:

1. Using BBPARM member USERID as a model, create a member of BBPARM with the user's logon ID and copy USERID to the new user ID member.
2. Edit the authorization parameters as required for this user (see page 433 for a description of these parameters).

Authorizing Specific User Groups ($GENERIC)

$GENERIC defines actual or generic user names that allow the specification of the same authorization (USERID) member for multiple users; for example:

```
MASK=TS+A*,AUTH=AUTH1
```

specifies that the authorization member, AUTH1, is used for any member that meets these criteria:

- TS in the first and second positions of the user name
- Any character in the third position
- A in the fourth position
- Any characters following the fourth position

Generic qualifiers, + and *, may be used to specify a pattern. A + signifies a single character; an * signifies multiple characters. Both can be assigned to any position of the mask; however, once the asterisk is assigned, no specified characters can follow it; for example, TS* or T*, but not T*S.

A specific user ID could also be specified; for example:

```
MASK=TSU1,AUTH=AUTH2
```

It is also possible to specify a remote user ID by using RMTAUTH in place of AUTH.

Multiple masks can be specified, one per statement.

Verifying User Command Authorization

A security user exit called AMSECU is called to provide additional security checking for critical product functions. If previous BBI security checks pass successfully, AMSECU gains control on the target system (either local or remote) just before a command is executed, where it provides a mechanism to accept or reject the command.

An administrator can use an installed security system to determine if the user is authorized to use the command. AMSECU can be used to limit use of MVS, specific target, and BBI commands by command or set of commands. The origin (issuer) of messages and transactions from the target can be controlled. Also, a command or set of commands can be limited to a specific user, group of users, or set of resources. For example, an MVS command can be issued by a user only when the AUTHJOB statement for a specific MVS specifies `MVSCMD=Y` in the user's BBPARM data set.

AMSECU is invoked when the following occurs and command authorization is specified in the user's member of the BBPARM data set shown below.

- An MVS command is issued and `MVSCMD=Y`[1]
- A DB2 command is issued and `DB2CMD=Y`
- A BBI control command is issued and `BBICMD=Y`
- An EXEC is submitted and `EXEC=Y` [1]
- A Resources command is issued and `RESAUTH=Y` [1]
- An IMS transaction is submitted and `IMSTRAN=Y` [1]
- An IMS command is submitted and `IMSCMD=Y` [1]
- A message is sent to an IMS logical terminal (LTERM) and `IMSMSG=Y` [1]

Note: AMSECU is invoked only when any of the parameters in the user authorization member of the BBPARM data set are set to Y except for RULEAUTH.

This exit should be link-edited as reusable in BBLINK.

AMSECU is passed a parameter list as follows:

```
R1 -->  PARAMETER LIST
```

Note: It is possible for WORD1, WORD2, and WORD3 to contain the same value.

---

[1] MAINVIEW AutoOPERATOR must be installed.

WORD1 A pointer to an eight-character field, ORIGIN (padded with blanks), that contains one of the following:

- TSO or RACF user ID of a TS user ID
- Node name of an IMS terminal
- BBI ID of a time-initiated MAINVIEW AutoOPERATOR EXEC as defined by the SUBSYS value specified in BBPARM member BBIJNT00
- IMS ID of an IMS message
- BBI ID for BBI-SS PAS messages as defined by the SUBSYS value specified in BBPARM member BBIJNT00
- Jobname or RACF user ID for an externally invoked MAINVIEW AutoOPERATOR EXEC

Note: The ORIGIN of messages and commands issued from within an EXEC is the same as that of the EXEC.

WORD2 A pointer to an eight-character field, TARGET (padded with blanks):

- BBPARM member BBIJNT00 contains a TARGET parameter that specifies the MVS target name. This target name is in WORD2 when an MVS, DB2, IMSTRAN, or IMS command is issued. TARGET
- BBPARM member BBIJNT00 contains a SUBSYS parameter that specifies the ID of the target BBI-SS PAS. This target name is in WORD2 when a BBI control command is issued.

WORD3 A pointer to an eight-character field, ID (padded with blanks), of the originating BBI-SS PAS that is specified by the SUBSYS parameter in BBPARM member BBIJNT00. For example, if a MAINVIEW AutoOPERATOR EXEC is invoked from subsystem BBIA and this EXEC invokes another EXEC as follows:

```
IMFEXEC SELECT E(XYZ) TARGET(BBIB)
```

the originating BBI-SS PAS is BBIA (WORD3) for EXEC XYZ and the target BBI-SS PAS is BBIB (WORD2).

Note: WORD3 and WORD1 are the same for a time-initiated EXEC or BBI-SS PAS message.

WORD4 A pointer to the actual CICS, DB2, IMS, MVS, or BBI control command string prefixed with the string length (length includes the descriptor word). For example:

```
llbb----COMMAND------
```

where:

`ll`	Is halfword length.
`bb`	Is halfword of zeros.
`COMMAND`	Is command text.

Following are sample MVS command strings:

```
   #V NET,ACTIVE
01007E4DCE6CCECEC
0100A50553B133955
```

Following are sample BBI command strings:

```
    .START BBI3
00004EECDE4CDCF
0F00B2319309463
```

WORD5 A pointer to a word that can be used by the exit routine. This word is maintained across calls to AMSECU so that you can maintain a control block structure for the exit. This word is initialized to zero before the first invocation of this exit routine.

The exit can authorize the command by returning zero in R15 or deny the command by returning nonzero. This exit gains control in KEY 8, supervisor state, and is afforded ESTAE protection by BBI. You can call another security routine such as RACF security or CA-ACF2 to receive the authorization. This exit should be coded as reentrant because it may be called from several tasks. If serialization is required, it must be provided by the user exit using ENQ facilities of MVS.

BBI expects you to return control in supervisor state, KEY 8.

Registers at entry are:

R1	Pointer to the parameter list
R2 - R12	Unpredictable
R13	An 18-word save area
R14	The return address to BBI
R15	The entry point address of the user exit

BBPARM Authorization Member Parameters

Parameters to authorize a TS user to access a BBI-SS PAS and product applications are provided in the USERID sample of BBPARM. These parameters are described in this section. Parameters used by all products are listed first in alphabetical order. They are followed by product-specific parameters that are grouped alphabetically by product and then by parameter.

$GENERIC in BBPARM can be used to define classes of users by using the AUTH parameter to point to members containing the authorization parameters listed in the USERID sample.

USERID Parameters for the BBI-SS PAS Environment

The following table describes the USERID parameters used by all BBI-PAS products:

Table 60. BBPARM Member USERID Parameters for BBI-SS PAS

Parameter	Description
AUTHJOB=[xxxxxxxx|*]	Where xxxxxxxx is the one- to eight-character jobname, stepname, or, where applicable, the subsystem ID of a specific target. This authorizes the user to: • Use application commands to display target information for the named system. • Route application commands to the BBI subsystem that supports that target. **Note:** Commands sent to remote systems are issued on the target only if the BBPARM library for the BBI-SS PAS target system contains an authorization member for the user or if the command is authorized by the generic authorization member $RMTID. See "Modifying Default Authorization for Remote Users ($RMTID)" on page 434. • Use various BBI-SS PAS or product-specific facilities. Each facility is authorized separately through the optional parameters listed in the remainder of this table. The generic qualifier asterisk (*) can be used to qualify the jobname or stepname entered. AUTHJOB can be used as many times as needed to authorize a user for specific subsystems.
BBICMD=[Y|N]	**Optional.** Valid values of Y (yes) or N (no) specify whether or not the user can enter control commands for the authorized BBI-SS PAS. Default is N.

Table 60. BBPARM Member USERID Parameters for BBI-SS PAS (Continued)

Parameter	Description
JRNLMSG=[Y|N]	**Optional.** Valid values of Y (yes) or N (no) specify whether or not the user can write messages to the BBI-SS PAS Journal log. These messages can be used to attempt to schedule EXECs. Default is Y.
PARMAUTH=[R|U|N]	**Optional.** Valid values for Dynamic Parameter Manager access. Specify whether or not the user can change the MAINVIEW AutoOPERATOR parameters for the target BBI-SS PAS using the Dynamic Parameter Manager. The values are: R(ead) Specifies that user can only read the current settings. U(pdate) Specifies that user has update authority. N(one) Specifies that user has no authority. Default is R(ead).

USERID Parameters for MAINVIEW AutoOPERATOR Only

The following table describes the USERID parameters used for MAINVIEW AutoOPERATOR only:

Table 61. BBPARM Member USERID Parameters for MAINVIEW AutoOPERATOR

Parameter	Description
EXEC=[Y|N]	**Optional.** Valid values of Y (yes) and N (no) specify whether or not the user can use EXECs for the authorized BBI-SS PAS. Default is N.
MVSCMD=[Y|N]	**Optional.** Valid values of Y (yes) and N (no) specify whether or not the user can enter MVS commands for the authorized BBI-SS PAS. Default is N.
RULEAUTH=[R|U|N]	**Optional.** Valid level for the Rules Processor Application access. Values are R (read), U (update), or N (none). Default is R.
MAINVIEW AutoOPERATOR for IMS Option Only	
IMSCMD=[Y|N]	**Optional.** Valid values of Y (yes) and N (no) specify whether or not the user can issue IMS commands for the authorized IMS. Default is N.
IMSMSG=[Y|N]	**Optional.** Valid values of Y (yes) or N (no) specify whether or not the user can submit messages to IMS LTERMs from AO for IMS. Default is N.
IMSTRAN=[Y|N]	**Optional.** Valid values of Y (yes) or N (no) specify whether or not the user can submit IMS transactions from AO for IMS. Default is N.
MAINVIEW AutoOPERATOR for OS/390 Option Only	
RESAUTH=[Y|N]	**Optional.** Valid values of Y (yes) or N (no) specify whether or not the user can issue special authorized commands. Default is N.

USERID Parameters for MAINVIEW for CICS, MAINVIEW for DB2, and MAINVIEW for DBCTL

The following table describes the USERID parameters used by MAINVIEW for CICS:

Table 62. BBPARM Member USERID Parameters for MAINVIEW for CICS, MAINVIEW for DB2, and MAINVIEW for DBCTL

Parameter	Description
TRACE=[S|D|N|ALL] **Note:** An alias of DB2TRACE is also accepted.	**Optional (MAINVIEW for CICS, MAINVIEW for DBCTL)**. Grants authority to start MAINVIEW for CICS application traces with differing levels of detail. S Authorizes a summary trace to be started; the default D Authorizes a detail plus a summary trace to be started N No trace authorization ALL Authorizes all trace types **Optional (MAINVIEW for DB2).** Grants the authority to start DB2 traces and to specify a level of detail per user per DB2 system. S Authorizes a summary trace (accounting) to be started; the default D Authorizes a detail plus summary trace (SQL) to be started N No trace authorization ALL Detail trace plus scans, I/Os, locks, and DDF detail event tracing A suffix of + after a value of D or ALL allows an authorization ID of + to be specified with a selection criterion of DB2AUTH (`DB2AUTH=+`) for a detail trace request. This requests a trace of the total workload; for example: `DB2TRACE=D+` For more information about the trace DB2AUTH (DB2 authorization ID) selection criteria keyword, see the *MAINVIEW for DB2 User Guide*.

USERID Parameters for MAINVIEW AutoOPERATOR, MAINVIEW for CICS, MAINVIEW for DB2, and MAINVIEW for DBCTL

The following table describes the USERID parameters used only for MAINVIEW AutoOPERATOR, MAINVIEW for CICS, MAINVIEW for DB2, and MAINVIEW for DBCTL.

Table 63. BBPARM Member USERID Parameters for MAINVIEW AutoOPERATOR, MAINVIEW for CICS, MAINVIEW for DB2, and MAINVIEW for DBCTL

Parameter	Description

PMACC=[A...Z*#]	**Optional.** Values identify which service classes the user can access. If `SERVLIST=RESTRICT` is specified in BBPARM member BBIISP00, this parameter also restricts services displayed with service list applications.
	
	The following values can be specified:
	
	• Class codes A to Z. A is the default.
	
	`PMACC=ABC`
	
	Provides access to class A, B, and C services. Services default to class A. The default can be modified in BBPARM member IMFSTD00.
	
	• An asterisk (*).
	
	`PMACC=*`
	
	Provides access to all services.
	
	• A number or pound sign (#).
	
	`PMACC=*#`
	
	Provides user access and change authority (free, modify, purge, quiesce, reset, stop, or switch) for all services, including those started by other users.
	
	Note: This is recommended for the system administrator.
	
	A string of any combination of valid values can be entered, separated by blanks or commas. The service access codes are shown in the service list applications.

PMACC=[#]	**MAINVIEW AutoOPERATOR only** The pound sign (#) indicates you have authority to modify and purge CALLX requests initiated by user IDs other than your own. Refer to Chapter 8, “Using the IMFEXEC Statements” in the *MAINVIEW AutoOPERATOR Advanced Automation Guide for CLIST EXECs*, or Chapter 9. “Using the IMFEXEC Statements” in the *MAINVIEW AutoOPERATOR Advanced Automation Guide for REXX EXECs* for more information about purging CALLX requests and user IDs.

Table 63. BBPARM Member USERID Parameters for MAINVIEW AutoOPERATOR, MAINVIEW for CICS, MAINVIEW for DB2, and MAINVIEW for DBCTL (Continued)

Parameter	Description
TRALLOC=[Y|N]	**Optional.** Provides control of dynamic data set allocation of trace log data sets. YES Is the default. It allows the BBI-SS PAS to allocate trace log data sets for this user dynamically. NO Indicates that the BBI-SS PAS is not to allocate the trace log data sets. Trace logging can be requested only if trace log data sets are preallocated. If `TRALLOC=NO` is specified and a trace log data set does not exist, a request for trace logging will fail. **Note:** Only a DISPOSITION of OLD is accepted for trace log data set allocation if the value for TRALLOC is NO.

USERID Parameters for MAINVIEW for DB2 Only

The following table describes the USERID parameters used only for MAINVIEW for DB2:

Table 64. BBPARM Member USERID Parameters MAINVIEW for DB2 Only

Parameter	Description
DB2CMD=[Y|N]	**Optional.** Specifies whether or not the user is authorized to issue DB2 commands. Default is N (NO).
DB2SQL=[ALL|NONE|AUTHID]	**Optional.** Specifies which SQL text can be viewed by the user with the DUSER service and the pop-up display for the BIND-TXT entry in the DTRAC service. A message is produced in place of the SQL text to inform the user that the text display was suppressed by user authorization. The following values can be specified: ALL Displays all SQL text (default) NONE No SQL text displayed AUTHID Only displays SQL text if the authorization ID of the event being traced matches the user ID connected to MAINVIEW for DB2

Appendix B. Basic Security Problem Determination

Basic security for MAINVIEW products through your ESM is controlled by the presence of control statements in the logical parmlib member BBSEC. If you make changes to the BBSEC member, you must restart the BBI-SS PAS for these changes to take effect.

To disable security through your ESM, remove the `TYPE=BBI` statement for the BBI-SS PAS and warm start the BBI-SS PAS.

Refer to Chapter 6, “Activating Basic Security” on page 111, for complete information about the correct syntax required in the BBSEC member.

Before You Contact Customer Support

Check the following items before contacting BMC Software Customer Support for your security-related questions:

1. Check the SYSLOG and the BBI Journal for any messages created during initialization.

   The following message is issued during BBI-SS PAS initialization when security through the SAF interface is in use:

   ```
   SM3209I  SECURITY DEFINITIONS RETRIEVED FROM xxxxxxxx ssid
   ```

   where

   xxxxxxxx Identifies whether security has been turned on from BBPARM, the logical parmlib concatenation, or SYS1.PARMLIB

   ssid Is the name of the BBI-SS PAS that is secured

   Use this message to determine which BBI-SS PAS has had security turned on and where it was turned on from.

2. Check the syntax of the TYPE=BBI statement.

   If the message in Step 1 did not show up in the SYSLOG or the BBI Journal during BBI-SS PAS initialization, the syntax of the TYPE=BBI statement in the BBSEC member may be incorrect.

   Security for MAINVIEW products can be implemented from the following levels:

   a. BBSEC member in the logical parmlib concatenation

   b. BBPARM DD name concatenation (normal searching order is used: the first BBSEC member found is the one used for security)

   If multiple TYPE=BBI statements exist through these three levels (regardless if they occur multiple times within a single level), BBI-SS PAS initialization uses only the first statement where the `SS=ssid` keyword matches the ID of the BBI-SS PAS. The match may be due to use of wildcards (asterisks) in the `SS=ssid` keyword.

3. Check to see if the wrong class (`CLASS=classname`) or prefix (`PREFIX=prefix`) is used.

The SM3209I message issued during BBI-SS PAS initialization indicates which library the TYPE=BBI definitions were taken from.

If you think the incorrect BBSEC member is being used, check for unwanted security calls in the logical parmlib and BBPARM security levels.

Once you find the member, check it for correct syntax usage. If the `CLASS` or `PREFIX` keywords are not specified correctly, the defaults are used. The defaults are `CLASS=$BOOLE` and `PREFIX=BBM`.

Documentation for these keywords is in Chapter 6, “Activating Basic Security” on page 111.

4. Ensure that the secured resource was refreshed correctly within the ESM after changes were made.

   All changes made to a TS user's security access are dynamic. Therefore, once a TS user's authority to access a resource is changed within the ESM, those changes are in effect for the next attempt to access that resource.

   Security checks are done for each command or service. The RACROUTEs are issued by the address space with the use of a third-party RACROUTE. This allows the security administrator to change a TS-user's authority without needing to restart the BBI-SS PAS. You cannot use the .RESET AUTH command once SAF security is active.

   A TS user attempting to gain access to CSM may have to re-log on after changes are implemented. The security check for CSM is done within the TS address space. Once a TSO user attempts to gain access to CSM and that access is denied, the TSO user must log on again after the security administrator grants access. This can be a re-logon; it does not require you to log off and log on.

5. Check the ESM's audit trail for the resource name and user ID verified.

   Because it is possible for a resource to be protected by multiple profiles when generics are in use, you can enable any tracing or auditing facilities the ESM may provide and check this output to determine the exact resource name and user ID the ESM is verifying.

   Note: The ESM uses the most discrete profile.

6. Check to see if the BBI-SS PAS was restarted after changes were made to the BBSEC member.

   All information pertaining to security is obtained from the BBSEC member during BBI-SS PAS initialization. Issuing the command .RESET AUTH has no effect on security through your ESM. All changes to the BBSEC member become effective after a warm start.

MAINVIEW AutoOPERATOR Advanced Security

Check the following items if you encounter security problems with MAINVIEW AutoOPERATOR advanced security:

1. Check the SYSLOG or the BBI Journal for any of the following messages created during initialization when any MAINVIEW AutoOPERATOR advanced security features are in use:

   ```
   AA3210I  SECURITY DEFINITIONS FOR TYPE=AAO FEATURE=APPL IN USE
   AA3211I  SECURITY DEFINITIONS FOR TYPE=AAO FEATURE=CMD IN USE
   AA3212I  SECURITY DEFINITIONS FOR TYPE=AAO FEATURE=EXEC IN USE
   AA3215I  SECURITY DEFINITIONS FOR TYPE=AAO FEATURE=ALRT IN USE
   AA3216I  SECURITY DEFINITIONS FOR TYPE=AAO FEATURE=PARM IN USE
   ```

   Each MAINVIEW AutoOPERATOR security feature that is implemented generates a separate message.

2. Check the SYSLOG or the BBI Journal for any of the following messages created during initialization when the MAINVIEW AutoOPERATOR advanced security feature CMD is in use:

   ```
   AA3214W  TYPE=AAO FEATURE=CMD SPECIFIED WITH SAF CLASS=DATASET
   AA3211I  SECURITY DEFINITIONS FOR TYPE=AAO FEATURE=CMD IN USE
   ```

   AA3214W is a warning message that is issued any time you start the BBI-SS PAS with a security class of DATASET. This results in resource names for command transactions to be restricted to only the command. Parameters and keywords are not checked.

   The following table shows an example of commands that can be used and the corresponding resource name that is checked for either CLASS=DATASET or CLASS=$BOOLE:

Command issued	**CLASS=$BOOLE**	**CLASS=DATASET**
#D SLIP=ID01	*prefix.ssid*.AAO.*target*MVSCMD.D.SLIP	*prefix.ssid*AAO.*target*MVSCMD.D
/DIS A	*prefix.ssid*.AAO.*target*IMSCMD.DIS.A	*prefix.ssid*.AAO.*target*IMSCMD.DIS
Note: Commands, parameters, and keywords are truncated at eight characters.		

3. When MAINVIEW AutoOPERATOR advanced security features are in use, check to see if the correct resource name is defined to the ESM.

   When either MAINVIEW AutoOPERATOR advanced Security Feature CMD or EXEC is in use, the more discrete level of checking overrides basic security checks when the command is issued from the TS command line.

The following example shows commands that can be issued and the corresponding resource name that is checked when either CLASS=DATASET or CLASS=$BOOLE is specified:

Command issued	Without advanced security	With advanced security
#D SLIP=ID01	*pre.ssid*.AAO.*target*.MVSCMD	*pre.ssid*.AAO.*target*.MVSCMD.D.SLIP
/DIS A	*pre.ssid*.AAO.*target*.IMSCMD	*pre.ssid*.AAO.*target*.IMSCMD.DIS.A
%TESTEXEC	*pre.ssid*.AAO.*target*.EXEC	*pre.ssid*.AAO.*target*.EXEC.TESTEXEC
Note: Commands, parameters, and keywords are truncated at eight characters.		

The MAINVIEW AutoOPERATOR advanced security feature of CMD does not affect BBI commands or SYSPROG commands issued from the COMMAND line. MAINVIEW AutoOPERATOR advanced security for CMD affects only:

- CICS Transactions
- IMS Transactions
- IMS Commands
- MVS Commands

MAINVIEW AutoOPERATOR and MAINVIEW SYSPROG Services

Check the following items if you encounter security problems with MAINVIEW AutoOPERATOR and MAINVIEW SYSPROG Services:

1. If you are experiencing trouble with MAINVIEW SYSPROG Services commands under MAINVIEW AutoOPERATOR, check security definitions for both products; for example:

   a. Check RESAUTH authority.

      The RESAUTH parameter controls all MAINVIEW SYSPROG Services commands issued by the TS.

   b. Check the TS user's authority in MAINVIEW SYSPROG Services.

      If the TS user has RESAUTH authority and the command still fails, check the MAINVIEW SYSPROG Services security definitions.

      Once MAINVIEW AutoOPERATOR determines that the TS user has authority to issue a MAINVIEW SYSPROG Services command, that command is passed along for further processing. Authority to issue that particular command is determined by MAINVIEW SYSPROG Services.

MAINVIEW for CICS

Check the following items if you encounter security problems with MAINVIEW for CICS:

1. Check the SYSLOG and the BBI Journal for the following message created during initialization when security through the ESM is in use:

   ```
   BCO006I  SECURITY DEFINITIONS FOR TYPE=CICS IN USE
   ```

   Note: This message might not be contiguous with other security messages issued; there may be intervening messages.

2. Check the syntax of the TYPE=CICS statement.

   If the message in Step 1 did not show up in the SYSLOG or the BBI Journal during BBI-SS PAS initialization, the syntax of the TYPE=CICS statement in the BBSEC member may be incorrect.

   Refer to Chapter 6, “Activating Basic Security” on page 111, for complete information about the correct syntax required in the BBSEC member.

Appendix C. Default Parameters for Enhanced Security

The following sections discuss default security parameters and default class property table parameters for enhanced security.

Default Parameter Definitions

The security parameter definitions for the subsystem are distributed in member BBMTSS as shown in Figure 28 on page 450. These default parameters are in effect in the subsystem until you specify changes to them.

There are two ways to change the default parameters:

- Use the parameter definition views to create a new parameter definition member in the BBSECURE library with a suffix of 00. See Chapter 11, “Parameter Definitions” on page 177, for information about accessing and using these views; see Table 65 on page 451 for information about each parameter.
- Create and edit a member manually. Sometimes you cannot access the parameter definition views because of your ESM configuration, but you need to change the default parameter definitions to disable security resource access authorizations completely, for example. See “Manually Creating a Parameter Definition Member” for instructions on defining a parameter definition member manually.

Manually Creating a Parameter Definition Member

To create and edit a parameter definition member manually:

1. Copy member BBMTSS in the BBACTDEF library for the CAS to a member named BBMTSS00 in the BBSECURE library.

   Warning

   Do not access BBACTDEF member BBMTSS in ISPF edit mode. This action will destroy your security subsystem and render the CAS unavailable. Your product will need to be reinstalled.

2. Edit member BBMTSS00 in the BBSECURE library. Initially, it will contain the statements shown in Figure 28 on page 450. You need to modify only the parameters required by your ESM. Valid parameter values are listed in Table 65 on page 451.

Understanding Parameter Definitions

Figure 28 shows the security parameter definitions that ship with your product.

See Table 65 on page 451 for information about each parameter and the different values that can be defined either manually or automatically through the CHANGE SECURITY PARAMETERS dialog.

```
ESM ESMTYPE(AUTO)      /* AUTOMATICALLY DETERMINE ESM TYPE         */
    PRODUCTS(BBI3)     /* BASE PRODUCT                             */
    SUBSYS(SSID)       /* RACROUTE SUBSYS= IS CAS SSID             */
    REQSTOR(ASIS)      /* RACROUTE REQSTOR= REMAINS UNCHANGED      */
    APPL(SSID)         /* RACROUTE APPL= DEFAULT IS CAS SSID       */
    SESSTYPE(NONE)     /* RACROUTE SESSTYPE= IS NOT SPECIFIED      */
    ESMUID(ACCEPT)     /* ESM-DEFINED USERIDS ARE NOT REQUIRED     */
    DFLTUID(NONE)      /* DEFAULT ESM USERID IF ESMUID(ACCEPT)     */
    PGMRNAME(ALLOW)    /* USER CAN SPECIFY PROGRAMMER NAME         */
    ESMGRINH(ALLOW)    /* ALWAYS ALLOW GROUP IDENT INHERITANCE     */
    ACCTINFO(ALLOW)    /* USER CAN SPECIFY ACCOUNTING INFO.        */
    DFLTACCT(EXTERNAL) /* DEFAULT ACCOUNT INFO. DEFINED BY ESM     */
    TSSPRIVPGM(STD)    /* TOP SECRET PRIVILEGED PROGRAM NAME       */
    TSSMSGS(ALL)       /* RETRIEVE TSS MESSAGES FROM FDBK & SAF    */
    ACF2MSGS(ALL)      /* RETRIEVE ACAF2 MESSAGES FROM FDBK & SAF  */
    ENTITYX(YES)       /* ESM SUPPORTS RACROUTE AUTH ENTITYX=      */
    DSTYPE(M)          /* ESM SUPPORTS RACROUTE AUTH DSTYPE=M      */
    TRACE(NONE)        /* SECURITY TRACES NOT INITIALLY ENABLED    */
    RSLIMIT(3)         /* SECURITY SERVER SUBTASK WILL RESTART     */
    RSINTERVAL(60)     /* AUTOMATICALLY UP TO 3 TIMES IN TO MIN    */
    WINMSG(NONSAFE)    /* BYPASS DISPLAY OF "SAFE" SECURITY MSGS   */
    ;
```

Figure 28. Default BBMTSS Parameter Definition Member

Table 65. Default Security Parameter Definitions

Description	Parameter
`ESMTYPE=(`*`esmtype`*`)` (ESM Type field)	Specifies the type of ESM in use on this MVS. The following values may be specified for *esmtype*: AUTO — Attempts to determine automatically which ESM is installed and has been activated. RACF — RACF (IBM Program Product). TSS — CA-TOP SECRET. ACF2 — CA-ACF2. SAF — Generic SAF interface. NONE — No SAF-compatible external security manager. **Important** Specifying `ESMTYPE(NONE)` effectively bypasses security for the entire subsystem. This may be inappropriate for your site. When defined, an uncustomizable, nonbypassable call to the security system is made during CAS initialization using the following parameters: Class name — FACILITY Entity name — BBMSS.ESMTYPE.NONE A RACF profile, a CA-TOP SECRET permit, or a CA-ACF2 rule need not exist to authorize `ESMTYPE(NONE)`, but, if it does, the CAS must be permitted UPDATE or WRITE access thereto.
`PRODUCTS(`*`product`*`)`	Reserved for future use. Currently, the value specified for the PRODUCT parameter must be BBI3.
`RELEASE(`*`release`*`)`	Specifies the release level of the ESM in use on this MVS system. Normally, it is not necessary to specify this parameter. The following values may be specified for *release*: 1.9 With RACF or SAF Version 1.9 2.1 With RACF or SAF Version 2.1 2.2 With RACF or SAF Version 2.2 4.2 With CA-TOP SECRET Release 4.2 4.3 With CA-TOP SECRET Release 4.3 4.4 With CA-TOP SECRET Release 4.4 5.0 With CA-TOP SECRET Release 5.0 5.2 With CA-ACF2 Release 5.2 6.0 With CA-ACF2 Release 6.0 6.1 With CA-ACF2 Release 6.1 6.2 With CA-ACF2 Release 6.2 **Note:** If `ESMTYPE(AUTO)` is specified, the `RELEASE` parameter should not be specified.

Table 65. Default Security Parameter Definitions (Continued)

Description	Parameter
`SUBSYS(`*`subsys`*`)` (Subsys ID field)	Specifies the one- to eight-character subsystem name to be passed to the ESM by the `SUBSYS=` parameter of the RACROUTE macro instruction. The following values may be specified for *subsys*: APPL — Current value of the `APPL` parameter. APPLID — Current CAS VTAM application name. JOBNAME — Current CAS JOB name. STEPNAME — Current CAS STEP name. PROCSTEP — Current CAS PROCedure stepname. SSID — MVS subsystem ID defined for use by the CAS. SMFID — Current MVS image SMF identifier. NONE — Nothing. Do not pass a `SUBSYS=` value to RACROUTE. " — Null. No `SUBSYS=` value is passed to the ESM by RACROUTE (same as NONE). '*string*' — Specified one- to eight-character string is passed to the ESM by RACROUTE.

Table 65. Default Security Parameter Definitions (Continued)

Description	Parameter
`REQSTOR(`*`ctrlpt`*`)` (Reqstor field)	Specifies the one- to eight-character requestor or control point name to be passed to the ESM by the `REQSTOR=` parameter of the RACROUTE macro instruction. The following values may be specified for *ctrlpt*: ASIS — Requestor value is not altered from that specified by MAINVIEW itself in the resource definition table entry. APPL — Current value of the `APPL` parameter. APPLID — Current CAS VTAM application name. JOBNAME — Current CAS JOB name. STEPNAME — Current CAS STEP name. PROCSTEP — Current CAS PROCedure stepname. SSID — MVS subsystem ID defined for use by the CAS. SMFID — Current MVS image SMF identifier. NONE — Nothing. Do not pass a `REQSTOR=` value to RACROUTE. " — Null. No `REQSTOR=` value is passed to the ESM by RACROUTE (same as NONE). '*string*' — Specified one- to eight- character string is passed to the ESM by RACROUTE.

Table 65. Default Security Parameter Definitions (Continued)

Description	Parameter
`APPL(`*`applid`*`)` (Applid field)	Specifies the one- to eight-character application name to be passed to the ESM by the `APPL=` parameter of the RACROUTE macro instruction. The following values may be specified for *applid*: APPLID — Current CAS VTAM application name. JOBNAME — Current CAS JOB name. STEPNAME — Current CAS STEP name. PROCSTEP — Current CAS PROCedure stepname. SSID — Current CAS address space MVS subsystem ID. SMFID — Current MVS image SMF identifier. NONE — Nothing. Do not validate application access. " — Null. No `APPL=` value is passed to the ESM by RACROUTE (same as NONE). '*string*' — Specified one- to eight-character string is passed to the ESM by RACROUTE.
`SESSTYPE(`*`type`*`)` (Session type field)	Is the session type to be specified to the ESM by RACROUTE `REQUEST=VERIFY,ENVIR=CREATE`. The following values may be specified for *type*: TSO — Specify `SESSION=TSO`. NJEBATCH — Specify `SESSION=NJEBATCH`. NONE — Do not specify `SESSION=`.
`ESMUID(`*`process`*`)` (ESM Userid field)	Identifies the ESM user ID processing to be performed. The following values may be specified for *process*: ACCEPT — An external security manager-defined user ID may be specified, used, defaulted, or inherited (but one is not required). REQUIRED — A valid external security manager-defined user ID must be specified, used, defaulted, or inherited. REJECT — A valid external security manager-defined user ID may not be specified or inherited.

Table 65. Default Security Parameter Definitions (Continued)

Description	Parameter
`DFLTUID(`*`dfltuid`*`)` (Default Userid field)	Is the default user ID to be used if `ESMUID(ACCEPT)` is specified and the user ID provided is not defined to the ESM and no service point-level default user ID has been specified. The following values may be specified for *dfltuid*: NONE — No default user ID has been provided. 'UserID' — Default user ID to be used.
`PGMRNAME(`*`value`*`)` (Programmer Name)	Indicates whether or not a programmer name field must be passed to the external security manager when a user attempts to sign on. The following values may be specified for *value*: ALLOW — The programmer name specified by the end user, or the default assigned to a user ID, if defined, is passed to the external security manager, but one is not required. IGNORE — A programmer name field is not required and is not passed to the external security manager. REQUIRE — A programmer name field must be provided by the end user.
`ESMGRINH(`*`value`*`)` (GROUP Inherit field)	Indicates whether or not the inheritance of the GROUP IDENT associated with a user ID's extracted security environment from any originating system to a target system is allowed and, if so, under what circumstances. The following values may be specified for *value*: ALLOW — The GROUP IDENT of a user ID is always inherited, regardless of the inheritance mechanism used to establish a security environment. IGNORE — The GROUP IDENT of a user ID is not inherited. UTKNONLY — The GROUP IDENT of a user ID is inherited only for security environments established by means of a B1 UTOKEN. EXTRONLY — The GROUP IDENT of a user ID is inherited only for security environments established by means of a non-B1 security environment password or ACF2 LOGONID mask extraction. **Important** IBM MVS B1 security guidelines require ALLOW or UTKNONLY to be specified. Any other value for this field is specified at the installation's own risk.

Table 65. Default Security Parameter Definitions (Continued)

Description	Parameter
`ACCTINFO(value)` (Accounting information)	Indicates whether or not any session or user ID-related accounting information must be passed to the external security manager. The following values may be specified for *value*: ALLOW — Accounting information is not required and may be blank; if blank, the default value, if specified, will be used. IGNORE — Accounting information is not accepted from the end user, and no accounting information will be passed to the external security manager. REQUIRE — Accounting infomation must be provided by the end user and will be passed to the external security manager.
`DFLTACCT(value)` (Default Account Information)	Indicates the type of default accounting information that is available, if defined. The following values may be specified for *value*: '*value*' — The default accounting information field that will be passed to the external security manager is a quoted variable string value as specified in the Default Account Information field. EXTERNAL — The default accounting information field value specified by the external security manager is to be used. NONE — There is no default accounting information assigned either by the external security manager or externally.
`TSSPRIVPGM(opt)` (TSS Priv Program field)	Is the source of the privileged program name passed to CA-TOP SECRET by the security interface by RACROUTE `REQUEST=FASTAUTH`. The following values may be specified for *opt*: JST — Jobstep task program name is used. STD — Standard privileged program name, BBM9SZ45, is used.
`TSSMSGS(src)` (Display TSS Msgs field)	Is the source of error messages retrieved from CA-TOP SECRET. The following values may be specified for *src*: FBK — TSS feedback area. SAF — Standard SAF interface message return area. ALL — Messages from both areas are merged and processed.
`ACF2MSGS(src)` (Display ACF2 Msgs field)	Is the source of error messages retrieved from CA-ACF2. The following values may be specified for *src*: FBK — CA-ACF2 feedback area (CA-TOP SECRET look-alike). SAF — Standard SAF interface message return area. ALL — Messages from both areas are merged and processed.

Table 65. Default Security Parameter Definitions (Continued)

Description	Parameter
`ENTITYX(opt)` (Support EntityX field)	Specifies whether or not the ESM in use supports the RACF 1.9-format `ENTITYX=` parameter format on the RACROUTE `REQUEST=AUTH` macro instruction. The following values may be specified for *opt*: YES `ENTITYX=` is supported. NO `ENTITYX=` is not supported (CA-ACF2 5.2 and earlier, CA-TOP SECRET 4.2 and earlier).
`DSTYPE(x)` (Support DSType=M field)	Specifies whether the ESM in use supports the RACF `DSTYPE=M` parameter on the RACROUTE `REQUEST=AUTH` macro instruction. The following values may be specified for *x*: M Yes, `DSTYPE=M` is supported (VOLSER not needed for `CLASS=DATASET`). N No, `DSTYPE=M` is not supported (must specify `DSTYPE=N`).
`TRACE(trace)` (Security traces field)	The type of security trace messages to be issued to the console. The following values may be specified for *trace*: NONE No security interface activity trace messages are to be issued. SIMPLE Only simple security trace messages are to be issued. EXTENDED Extended security trace messages are to be issued. Simple and Extended Security tracing may be activated and terminated after the CAS has initialized, using the DIAGMSG view.
`RSLIMIT(count)` (Security restart times field)	The restart limit. After this number of automatic security interface server subtask restarts within a period of `RSINTERVAL` minutes, no further automatic restarts are performed. This parameter is used to catch runaway automatic recovery in an ESM abend scenario. A decimal number must be specified for *count*.

Table 65. Default Security Parameter Definitions (Continued)

Description	Parameter
`RSINTERVAL(`*`mins`*`)` (Security restart minutes field)	Is the restart interval. After this number of automatic security interface server subtask restarts specified for `RSLIMIT` have occurred within the number of minutes specified for `RSINTERVAL`, no further automatic restarts are performed. This parameter is used to catch runaway automatic recovery in an ESM abend scenario. A decimal number not greater than 1440 must be specified for *mins*
`WINMSG(`*`option`*`)` (Window messages field)	Specifies which security interface-generated and ESM-generated messages are to be displayed in any MAINVIEW window. The following values may be specified for *option*: ALL — All security messages are to be exhibited to the user. NONSAFE — Only *nonsafe* security messages are to be displayed. In other words, *safe* security messages may be bypassed safely and not exhibited to the end user. This reduces the frequency and volume of nuisance security manager and security interface-generated messages.

Default Class Definitions

The default class definitions for the SAF class `FACILITY` are shown in Figure 29 on page 460. These parameters are in effect in the subsystem until you specify changes to these defaults.

Changing and Adding Classes

There are two ways to change and add classes:

- Use the class definition views to add or change default security class parameters in the member with suffix 00 of the security parameter library, as described in Chapter 10, "Class Definitions". See Table 66 on page 461 for information about each class parameter.
- Create a new member or edit a member manually to change the parameters. Sometimes you cannot access the class definition views because of your ESM configuration, but you need to change the default parameters or add new classes. See "Manually Creating a Class Definition Member" on page 459 for instructions on how to define class definitions manually and edit the class definitions.

Manually Creating a Class Definition Member

To create and edit a class definition member manually:

1. Copy member BBMTSP in the BBACTDEF library for the CAS to a member named BBMTSP00 in the security parameter library.

Warning

Do not access BBACTDEF member BBMTSP in ISPF edit mode. This will destroy your security subsystem and render the CAS unavailable. Your product will need to be reinstalled.

2. Edit member BBMTSP00 in the security parameter library. Initially, it will contain definitions for over 70 classes in the statements, as shown in Figure 29 on page 460. You need only modify the parameters required by your ESM. Valid parameter values are listed in Table 66 on page 461.

Understanding Class Definitions

Figure 29 on page 460 shows the class definitions defined for class `FACILITY` and `$BBM` that ship with your product. These two examples are a small sampling of the default class definitions. To see a list of all the default class definitions, display the SECDEF view.

See Table 66 on page 461 for information about each parameter and the different values that can be defined either manually or automatically through the CHANGE SECURITY CLASS DEFINITION or ADD SECURITY CLASS DEFINTION dialogs.

```
FILEDATE                      /*  Most recent update to this member    */
    UPDUSERID = userID        /*  UserID this table updated by         */
    UPDSYSTEM = version       /*  System this table updated on         */
    UPDDATE = date            /*  Date when this table updated         */
    UPDTIME = time            /*  Time when this table updated         */
;
CLASS('$BBM')
    DESCRIPTION = 'BBI-3 Default Resource Class            '
    ACTIVE = YES
    NEXT = 'FACILITY'
    UPDUSERID = JXM1
    UPDSYSTEM = R320
    UPDDATE = 10JAN1995
    UPDTIME = 15:52
;
CLASS('FACILITY')             /*  External Resource CLASS Name         */
    DESCRIPTION = 'IBM or Vendor Defined Miscellaneous Uses'/*         */
    ACTIVE = YES              /*  Resource Class active or not         */
    MAXLEN = 39               /*  Maximum length of entity name        */
    LOGFAIL = ALLOW           /*  Log Resource Access Failure          */
    LOGAUTH = ALLOW           /*  Log Resource Access Success          */
    INTENT = ( )              /*  Access intent transformations        */
    RESLIST = NO              /*  Build LIST and use FASTAUTH          */
    PREFIX = ''               /*  Resource Entity Name Prefix          */
    SUFFIX = ''               /*  Resource Entity Name Suffix          */
    TSSCLASS = UNCHANGED      /*  Top Secret Internal CLASS Name       */
    TSSAUTH = YES             /*  Substitute AUTH for FASTAUTH         */
    TSSFAUTH = NO             /*  Substitute FASTAUTH for AUTH         */
    TSSLIST = OK              /*  Response to LIST build request       */
    TSSDEFPROT = NO           /*  Bypass ownership checking            */
    TSSRESMASK = NO           /*  Extended resource access mask        */
    TSSCLSMASK = NO           /*  Extended class access mask           */
    TSSPRIVPGM = NO           /*  Privileged program name req'd        */
    ACF2RULE = FAC            /*  Generalized Resource Rule Type       */
    ACF2RESDIR = NO           /*  Resource Directory Build req'd       */
    ACF2AUTH = NO             /*  Substitute AUTH for FASTAUTH         */
    ACF2LIST = PERFORM        /*  Response to LIST build request       */
    UPDUSERID = JXM1          /*  UserID this entry updated by         */
    UPDSYSTEM = R320          /*  System this entry updated on         */
    UPDDATE = 27JAN1995       /*  Date when this entry updated         */
    UPDTIME = 14:26           /*  Time when this entry updated         */
```

Figure 29. Partial Default BBMTSP00 Class Definition Member

Table 66. Default Class Definitions

Parameter	Description
`CLASS('intclass')` (Class Name field)	Specifies the internal class name whose attributes are to be defined. The *'intclass'* value is a one- to eight-character class name referenced by a resource manager. **Note:** Internal class names are fixed and cannot be altered. All possible internal class names to be referenced by the component are already defined in CLASS statements in the distributed member BBMTSP.
`DESCRIPTION = 'description'` (Description field)	Specifies a user-readable description of the class. The parameter value is a string of up to 40 characters that must be delimited with enclosing apostrophes.
`NEXT='nxticlas'` (NextClass field)	Specifies the one- to eight-character class name of the next `CLASS` statement that contains class name and access attribute transformation specifications. These specifications also are to be applied to resource access authorization requests by resource managers using this class name. The `NEXT=` parameter provides benefits in defining and maintaining your class definitions. For more information about the `NEXT=` parameter, see "Understanding the NEXT= Parameter" on page 472.
`ACTIVE = YES|NO` (Active field)	Specifies whether the class is active. The following values may be specified: YES — The class is active, and resource access attribute and entity name transformation (including the `NEXT=` parameter) processing continues normally. NO — The class is considered inactive. Any resource access authorization request that uses this class name (or any request that reaches here through a previous specification of the `NEXT=` parameter) is not passed to the ESM, but instead causes the security interface to respond to the resource manager with return code 04, which indicates that the resource is undefined (or unprotected). **Note:** Interprets return code 04 the same as return code 00.

Table 66. Default Class Definitions (Continued)

Parameter	Description
`MAXLEN = length` (Max field)	Specifies the maximum length of the resource entity name that is supported by the ESM. The following *length* values may be specified: CDT — Maximum length is determined by the RACF class descriptor table entry for this class name. STD — Maximum length is that implied by CA-TOP SECRET RDT entry attribute STD (nominally, 8). LONG — Maximum length is that implied by CA-TOP SECRET RDT entry attribute LONG (nominally, 44). integer — Maximum length is the integer value specified.
`LOGFAIL = option` (LogFail field)	Specifies whether, in the case of resource access authorization failure, logging by the ESM is to be allowed. The following *option* values may be specified: ALLOW — If specified in the resource profile, logging of access authorization failures is to be permitted. NEVER — If resource access authorization fails, it is not to be logged by the ESM.
`LOGAUTH = option` (LogAuth field)	Specifies whether, in the case of resource access authorization success, logging by the ESM is to be allowed. The following *option* values may be specified: ALLOW — If specified in the resource profile, logging of a successful access authorization is to be permitted. NEVER — If resource access authorization is permitted, it is not to be logged by the ESM.
`INTENT = (list)` (Execute, Read, Update, Control, Alter, Create, Write, and Delete fields)	Specifies a list of access intent transformations (which may be null), separated by commas, to be performed on the resource access authorization. See "Transformation List Values for the INTENT= Parameter" on page 473 for information about acceptable *list* values.

Table 66. Default Class Definitions (Continued)

Parameter	Description
`RESLIST = option` (Reslist field)	Specifies whether or not resource access authorizations for all requests for this class are to be handled through FASTAUTH. The following *option* values may be specified: YES — If a resource manager requests authorization for a resource in this class without a prior request to build a resource list, a resource list is built and FASTAUTH is used to search the list to authorize all user access thereafter. You should not specify `RESLIST=YES` for any class that you intend to or might expect to change while the CAS is still running, because there is no way to refresh the resource list once it has been built by this method. MAINVIEW normally causes a list to be built and searched through FASTAUTH for none of the standard classes, but the use of this parameter will not normally be required. NO — If a resource manager requests authorization for a resource in this class without a prior request to build a resource list, the request will be passed to the ESM in the normal manner (REQUEST=AUTH) without first building a resource list. Specifying `RESLIST=NO` does not prevent the resource manager from explicitly requesting that a resource list be constructed and subsequently searched through FASTAUTH. However, for classes that normally are not so treated, doing so prevents one from being built automatically by the security interface. **Note:** Normally, it is not necessary for you to specify `RESLIST=YES`, since the resource managers already properly process the standard classes in the manner required for expected full function. The `RESLIST=YES` parameter should be used only under special circumstances and then only at the direction of support personnel. The `RESLIST=YES` parameter is intended for use with CA-TOP SECRET, with classes that require special authorization attributes (such as privileged program name and extended resource or class attribute masks) that are available only when the FASTAUTH interface is used. This parameter also is intended for use with CA-ACF2 under certain circumstances when a global resource directory has **not** been constructed to process generalized resource rules with masking characters in the rule keys.

Table 66. Default Class Definitions (Continued)

Parameter	Description

PREFIX = '*prefix*'
 	
(Prefix field)
	Specifies that the entity name is to be prefixed with the string value specified, which must be enclosed in apostrophes. If no prefix is to be applied, specify a null string as the value for the prefix (two consecutive apostrophes).
	
	The prefix is applied even if the NEXT= parameter is specified, and the new resource entity name with the specified prefix added is passed to the next resource name/attribute transformation phase as it may specify them. Therefore, all of the PREFIX= values are cumulative.
	
	The maximum length of the prefix is subject only to the maximum length of the entity name as supported by the ESM. Normally, however, you should not use a prefix string with a length greater than nine characters (one data set name index level, plus a period delimiter).
	
	For example, to cause all entity names used by ordinary CA-ACF2 data set access rules with initial rule key of $BBM, specify the following commands in member BBMTSP00:
	
	`CLASS('$BBM')  /* Default Resource Class */`
	`  PREFIX='$'  /* Put "$" at the beginning  */`
	`  NEXT='DATASET'  /* of entity name and jump to entry*/`
	`  ;  /* for class 'DATASET' to finish.  */`

SUFFIX = '*suffix*'
 	
(Suffix field)
	Specifies that the entity name is to be suffixed with the string value specified, which must be enclosed in apostrophes. If no suffix is to be applied, specify a null string as the value for the suffix (two consecutive apostrophes).
	
	The suffix is applied even if the NEXT= parameter is specified, and the new resource entity name with the specified suffix added is passed to the next resource name/attribute transformation phase as it may specify them. Therefore, all of SUFFIX= values are cumulative.
	
	The maximum length of the suffix is subject only to the maximum length of the entity name as supported by the ESM. Normally, however, you should not use a suffix string with a length greater than nine characters (one data set name index level, plus a period delimiter).
	
	For example, to cause all entity names to use generic RACF data set profiles that follow a convention that has been established for use with other products and that requires some additional suffix on the profile to trigger the generic profile, specify the following commands in member BBMTSP00:
	
	`CLASS('$BBM')  /* Default Resource Class */`
	`  SUFFIX='.BBM'  /* Add ".BBM" to the end of the  */`
	`  NEXT='DATASET'  /*  entity name and jump to entry */`
	`  ;  /*  for class 'DATASET' to finish`

Table 66. Default Class Definitions (Continued)

Parameter	Description
`TSSCLASS = tss-class` (Class field in TopSecret section)	Specifies the internal class name used when CA-TOP SECRET is the ESM. The following values may be specified: '*tssclass*' One- to eight-character (internal) class name, which must be enclosed in apostrophes, to be passed to TSS for resource authorizations for this (external) class name. UNCHANGED Specifies that no class name transformation is to be performed, and the internal class name as currently specified is to be passed to TSS as the external class name. **Note:** In the SECDEFD view's ADD SECURITY CLASS DEFINITION or CHANGE SECURITY CLASS DEFINITION dialog, *unchanged* is denoted by blanks, or a blank `Class Name` field in the TopSecret section of the dialog. DISALLOW Specifies that this (internal or external) class name is disallowed in a TSS environment, and such requests, if inadvertently made, will be rejected. CA-TOP SECRET requires that the security interface pass the internal TSS class name (rather than the external class name that is used with the TSS command interface) for certain resource access authorizations. All such classes that are normally referenced by any resource manager are already properly defined according to TSS requirements in member BBMTSP. Certain internal class names are supported by TSS for the REQUEST=AUTH or FASTAUTH interfaces for special, very privileged functions that manipulate resources, return information about them, or alter TSS system operation. These classes should never appear in a normal RACROUTE resource access authorization SAF parameter list. To ensure that you do not inadvertently select one of these special, restricted names for a class, member BBMTSP already includes CLASS statements that specify the restricted class names with the specified TSSCLASS=DISALLOW attribute. Normally, you will not have to specify this parameter on any CLASS statement that you add to BBMTSP00, unless you want to disallow specifically any access to what would otherwise be a valid internal or external class name.

Table 66. Default Class Definitions (Continued)

Parameter	Description
`TSSAUTH = option` (Auth field in TopSecret section)	Specifies whether a standard AUTH request is to be substituted for a FASTAUTH request when CA-TOP SECRET is the ESM. The following values may be specified: YES — If TSS is your ESM, a RACROUTE REQUEST=AUTH is to be performed instead for this class under all circumstances, even when the resource manager requests that a resource list be built and requests resource access authorization through RACROUTE REQUEST=FASTAUTH. NO — AUTH is not substituted for FASTAUTH in a TSS environment. This parameter is intended mainly for use in diagnostic scenarios.
`TSSFAUTH = option` (FastAuth field in TopSecret section)	Specifies whether a special FASTAUTH request is to be substituted for a standard AUTH request when CA-TOP SECRET is the ESM. The following values may be specified: YES — If TSS is the ESM, a RACROUTE REQUEST=FASTAUTH is to be performed instead for this class under all circumstances, even when the resource manager has not requested that a resource list be built and does not request resource access authorization through RACROUTE REQUEST=FASTAUTH. NO — FASTAUTH is not substituted for AUTH in a TSS environment. TSSFAUTH=YES is normally used, together with TSSCLASS='tssclass', to force certain classes to be authorized through FASTAUTH. This is because of special TSS requirements forced onto the security interface to support all TSS PERMIT command language parameters (such as PRIVPGM) that are not supported through AUTH.

Table 66. Default Class Definitions (Continued)

Parameter	Description
`TSSLIST = response` (List field in TopSecret section)	Specifies the response by the security interface to a request by a resource manager (when running in a CA-TOP SECRET environment) to build a resource list. A resource list is built in anticipation of subsequent FASTAUTH resource access authorization requests. The following values may be specified: OK — Resource list build request is ignored, and a successful return code that indicates that profiles actually exist in the specified class is returned to the resource manager. TSS does not support RACROUTE REQUEST=LIST. If one is executed, no action is taken and a successful return code is always returned to the caller. PERFORM — Resource list build request is to be acted upon normally, as if TSS actually supported the RACROUTE REQUEST=LIST call, and the return code actually returned by TSS is processed as it would be for RACF. NOPROFILES — Resource list build request is ignored, and a successful return code that indicates that no profiles exist in the class is returned to the resource manager. ALREADY — Resource list build request is ignored, and a warning return code that indicates that a resource list for the class has already been built is returned to the resource manager. BADCLASS — Resource list build request is ignored, and an error return code that indicates that the class is invalid is returned to the resource manager.
`TSSDEFPROT = option` (DefProt field in TopSecret section)	Specifies whether resource ownership checking is to be assumed (by way of bypassing checking) in a CA-TOP SECRET environment. The following values may be specified: YES — Resource ownership checking is to be bypassed. NO — Resource ownership checking is to be performed. TSSDEFPROT=YES should be specified only for those internal TSS classes that support it and for which you want resource ownership checking to be bypassed. For more information about bypassing ownership checking, refer to the appropriate CA-TOP SECRET documentation.

Table 66. Default Class Definitions (Continued)

Parameter	Description
`TSSRESMASK = option` (ResMask field in TopSecret section)	Specifies whether the resource entity name requires an extended resource access mask in the first character that follows the entity name (at offset +8 for MAXLEN=STD; at offset +44 for MAXLEN=LONG) in a CA-TOP SECRET environment. The following values may be specified: YES Extended resource access mask is required. NO Extended resource access mask is not required. For more information about bypassing ownership checking, refer to the appropriate CA-TOP SECRET documentation.
`TSSCLSMASK = option` (ClassMask field in TopSecret section)	Specifies whether the class name requires an extended class access mask in the first character that follows the class name (at offset +8 for all classes) in a CA-TOP SECRET environment. The following values may be specified: YES Extended class access mask is required. NO Extended class access mask is not required. DATASETX is an example of an internal/external TSS class name that requires the extended class access mask value. For more information on bypassing ownership checking, refer to the appropriate CA-TOP SECRET documentation.
`TSSPRIVPGM = option` (PrivPgm field in TopSecret section)	Specifies whether the resource entity name requires a privileged program name in the second through ninth characters that follow the entity name (at offset +9 for MAXLEN=STD; at offset +45 for MAXLEN=LONG) in a CA-TOP SECRET environment. The following values may be specified: YES Privileged program name is required. NO Privileged program name is not required. For more information on bypassing ownership checking, refer to the appropriate CA-TOP SECRET documentation.

Table 66. Default Class Definitions (Continued)

Parameter	Description
`ACF2RULE = typ` (Rule field in ACF2 section)	Specifies, for CA-ACF2 environments, the underlying three-character generalized resource rule type that corresponds to the SAF class in question, as mapped by the SAFMAPS GSO record. The following values may be specified: NONE — Specifies that this class name does not map to a CA-ACF2 generalized resource rule type. Generally, all class names map to a generalized resource rule type, except DATASET. Classes not used (or not relevant) in the CA-ACF2 environment may be specified to have the ACF2RULE=NONE attribute. typ — Is the three-character CA-ACF2 generalized resource rule type. Generally, most CA-ACF2 rule types may be specified without the enclosing apostrophes. 'typ' — Is the three-character CA-ACF2 generalized resource rule type, enclosed in apostrophes. You must use this form of specification if the three-character rule type, without apostrophes, happens to match a reserved keyword used in the specification of parameters in these members. The security interface can usually determine, from internal CA-ACF2 control blocks, which CA-ACF2 generalized resource rule type, if any, a SAF class has been mapped to (through the SAFMAPS or CLASMAP GSO records). If the security interface cannot determine which rule type is being used, this specification will be used instead. If there is a mismatch, a warning message is issued to alert you, so that it can be corrected. **Note:** You should ensure that the values used for all class names in member BBMTSP are correct, and, if not, respecify them in member BBMTSP00. In many cases, the resource rule types will be different because of customization decisions made by your enterprise.

Table 66. Default Class Definitions (Continued)

Parameter	Description

`ACF2RESDIR = option`
 	
(Resdir field in ACF2 section)
	Specifies, for CA-ACF2 environments, whether a CA-ACF2 resource rule directory is required to be built for the underlying generalized resource rule type to process resource access authorization requests properly. The following values may be specified:
	
	YES A CA-ACF2 resource directory is required.
	
	NO A CA-ACF2 resource directory is not required.
	
	A CA-ACF2 resource rule directory will be required when all the following are true:
	
	• CA-ACF2 masking characters are used in the resource rule keys.
	
	• The class is one that is not normally accessed through resource managers and the security interface using the SAF RACROUTE REQUEST=FASTAUTH interface. (For classes that are accessed in that manner, the resource list build request that *is* made will result in the construction of a resource directory in the appropriate address space. No further installation action will be required to process those classes properly.)
	
	• A resource directory for the underlying generalized resource rule type has not been made globally resident through the INFODIR or RESDIR GSO record.
	
	If you have specified that a resource directory for the underlying generalized resource rule type be made globally resident through INFODIR, it is not necessary to request that one be built in each using address space.
	
	Here is an example of how to specify to CA-ACF2 that rules of type FAC are to be made globally resident. From the TSO READY prompt, type the following commands:
	
	`ACF`
	`SET CONTROL(GSO) SYSID(sysid)`
	`CHANGE INFODIR ADD TYPES(R-RFAC)`
	`END`
	
	Normally, you will not have to specify ACF2RESDIR=YES for any classes accessed through the standard definitions included in the distributed BBMTSP member. This may not still be the case, however, if you have customized these specifications using overrides in member BBMTSP00.

Table 66. Default Class Definitions (Continued)

Parameter	Description
`ACF2AUTH = option` (Auth field in ACF2 section)	Specifies whether a standard AUTH request is to be substituted for a FASTAUTH request when CA-ACF2 is the ESM. The following values may be specified: YES — If CA-ACF2 is the ESM, a RACROUTE REQUEST=AUTH is to be performed instead for this class under all circumstances, even when the resource manager requests that a resource list be built and requests resource access authorization through RACROUTE REQUEST=FASTAUTH. NO — AUTH is not substituted for FASTAUTH in a CA-ACF2 environment. This parameter is intended mainly for use in diagnostic scenarios.
`ACF2LIST = response` (List field in ACF2 section)	Specifies the response by the security interface to a request by a resource manager (when running in a CA-ACF2 environment) to build a resource list. A resource list is built in anticipation of subsequent FASTAUTH resource access authorization requests. The following values may be specified: OK — Resource list build request is ignored, and a successful return code that indicates that profiles actually exist in the specified class is returned to the resource manager. This value should *not* be specified unless it will *always* be the case that a globally resident directory will be created. **Note:** ACF2 *does* support RACROUTE REQUEST=LIST in a certain manner, for classes normally accessed through RACROUTE REQUEST=FASTAUTH. PERFORM — Resource list build request is to be acted upon normally, and the return code actually returned by CA-ACF2 is to be processed as it would be for RACF. NOPROFILES — Resource list build request is ignored, and a successful return code that indicates that no profiles exist in the class is returned to the resource manager. ALREADY — Resource list build request is ignored, and a warning return code that indicates that a resource list for the class has already been built is returned to the resource manager. BADCLASS — Resource list build request is ignored, and an error return code that indicates that the class is invalid is returned to the resource manager.

Table 66. Default Class Definitions (Continued)

Parameter	Description
`UPDUSERID = userid`	Specifies, for audit purposes, the UserID (USERID, ACID, LOGONID) of the user who last updated this CLASS statement. You should update this parameter to provide change tracking information.
`UPDSYSTEM = sysid`	Specifies, for audit purposes, the SMF system ID of the MVS image whereon this CLASS statement was last updated. You should update this parameter to provide change tracking information.
`UPDDATE = ddmmmyyyy`	Specifies, for audit purposes, the date (in Gregorian ddmmmyyyy notation) when this CLASS statement was last updated. You should update this parameter to provide change tracking information.
`UPDTIME = hh:mm`	Specifies, for audit purposes, the time (in 24-hour clock hh:mm notation) when this CLASS statement was last updated. You should update this parameter to provide change tracking information.

Understanding the NEXT= Parameter

The purpose of the `NEXT=` parameter is to facilitate cascaded, hierarchical transformations of resource access attributes. This parameter enables multiple internal classes to share one external class (one that is defined to the ESM). This means the initial internal class attribute definitions do not have to be updated simultaneously with duplicate, and otherwise redundant, specifications. Instead, the external class attributes are taken from the final internal class definition, to which all previous internal class definitions map (as specified by the `NEXT=` parameter).

If there is no next `CLASS('nxticlas')` statement defined, *'nxticlas'* becomes the external class name, or the value defined to the current `CLASS` statement, that is passed to the ESM through RACROUTE to process the resource access authorization request.

The final, external class attributes are intended to be taken from the last internal class definition (the one without a `NEXT=` parameter), so, for each `CLASS` statement that specifies the `NEXT=` parameter, only the following (other) parameters on that CLASS statement are effective and actually used to transform the resource access authorization request.

Transformation List Values for the INTENT= Parameter

Each transformation list defined to the `INTENT=` parameter may include the following option:

level1 TO level2

Specifies that the access intent `level1` is to be transformed to access intent `level2`, as if the resource manager had requested that level of access intent originally. Access intent levels may have the same meaning as corresponding values defined by the administrative command language for each respective ESM, as shown in Table 67.

Table 67. Access Intent Interpretations by the ESM, for a Transformation

Access intent field	**How interpreted by each ESM**			
	IBM RACF	**CA-TOP SECRET**	**CA-ACF2 data set rules access levels**	**CA-ACF2 generalized resource rule service level**
EXECUTE	EXECUTE	FETCH	EXEC	READ
READ	READ	READ	READ	READ
UPDATE	UPDATE	READ plus WRITE	WRITE	UPDATE
WRITE	UPDATE	WRITE	WRITE	UPDATE
CONTROL	CONTROL	WRITE	ALLOC	UPDATE
ALTER	ALTER	ALL	ALLOC	UPDATE
CREATE	ALTER	CREATE	ALLOC	ADD
DELETE	ALTER	SCRTCH	ALLOC	DELETE

level1 RETURNS answer

Specifies that a resource access request that specifies an access intent of `level1` is not to be passed to the ESM for processing, but will instead cause the security interface to respond to the resource manager with a return code as specified by the ANSWER parameter value. ANSWER parameter values can be specified as follows:

Table 68. Access Intent Interpretations for Level1

Access intent level	**Return code value**
YES	0
MAYBE	4
NO	8

Index

Symbols

$BOOLE security class, defining 81
$GENERIC BBPARM member 433, 434
$RMTID BBPARM member 434
$USERID BBPARM member 433, 434
* (asterisk) qualifying character 86, 435
+ (plus) qualifying character 86, 435

A

activating basic security 111
active security, viewing 143
adding
  BBSEC to SYS1.PARMLIB 118
  resource class to CA-TOP SECRET 163
  resource class to RACF 155
  security class definition 168
AMSECU (security user exit) 435, 437
AOALRTDF CLIST 107
AOALRTPE CLIST 107
AOAnywhere commands
  securing 22
AOAPPLDF CLIST 107
AOAPPLPE CLIST 107
AOCMDDF CLIST 107
AOCMDPE CLIST 107
AOEXECDF CLIST 107
AOEXECPE CLIST 107
AOPARMDF CLIST 107
AOPARMPE CLIST 107
AUTH= 434
AUTHJOB parameter 434, 438
authorization
  $GENERIC 434
  generic 86
  parameters, list of 438
  proprietary security 432
  requests
    common resources 197–204
    types 197
  trace 440, 442
AutoLogon 413
AutoOPERATOR
  alert-level security 59, 107
  application-level security 50–56, 107
  BBSEC TYPE statement 113
  command-level security 56–58, 107
  EXEC-level security 59, 107
  MAINVIEW SYSPROG Services 23–33
  parameter-level security 60, 107
  securing resources 48–60

B

basic security
  activating 111
  AOAnywhere commands 22
  BBI commands 17
  CICS transactions 20
  DB2 commands 19
  DB2 trace 19
  detail application trace 18–19
  displaying parameter data 20
  EXECs 20
  IMS from AutoOPERATOR 21
  Journal log 17
  Rules Processor 19
  securing MVS commands 19
  SQL text 19
  summary application trace 18
  SYSPROG services commands 22
  targets 17
  trace logs 17
  updating parameter data 20
BBACTDEF 137, 449
BBI
  commands, basic security 17
  ID 436
BBICMD parameter 438
BBKTRNnn 137
BBMTRNnn 137
BBMTSPnn 137, 459
BBMTSS00 message 182
BBMTSSnn 449
BBMZRNnn 137
BBSEC
  logical parmlib concatenation 118
BBSEC BBPARM member
  activating security for multiple products 113
  adding to SYS1.PARMLIB 118
  creating 112
  disabling security 119
BBSECURE
  BBMTSS member 449
  sharing security parameter definitions 137

C

CA-ACF2
  adding an SAF resource class for 149
  APPL access 419
  configuring 145
  defining PAS and CAS LOGONIDs 146
  defining rules 151
  generalized resource rules 152
  GSO Record Options 146
  MAINVIEW Alternate Access 416
  ordinary CA-ACF2 data set rules 152

overview 145
TERMINAL access authority 419
updating the CA-ACF2 SAFDEF list 148
CA-TOP SECRET
adding a new SAF resource class 163
APPL access authority 425
configuring 160
controlling access to product resources 165
defining a new Facility Matrix entry 161
defining ownership of resources 164
defining security attributes for started tasks 162
MAINVIEW Alternate Access 423
overview 160
TERMINAL access authority 424
changing
security class parameters 170
CICS
action services 34–47
AutoOPERATOR for CICS 55
CICSRACF CLIST 108
diagnostic services 68
display services 61–67
transactions, invoking from AutoOPERATOR 20
CICS resources 240–262
CICSRACF CLIST 108
class definitions 167
CLIST library 105
CLISTs
AOALRTDF 107
AOALRTPE 107
AOAPPLDF 107
AOAPPLPE 107
AOCMDDF 107
AOCMDPE 107
AOEXECDF 107
AOEXECPE 107
AOPARMDF 107
AOPARMPE 107
CICSRACF 108
DB2CMDDF 106, 109
DB2CMDPE 106
MIGUSER 105, 106
RACFDEF 105, 106
CMF MONITOR
resource definitions 214–233
views 371–378
command authorization 435
command syntax notations xvi
common resource definitions 197–204
common resources
basic security 16
common views 369
context in default entity name 134
creating
BBSEC member 112
global security definitions 10
resource names
for AutoOPERATOR 107
for CICS 108
for MAINVIEW for DB2 109

D

data sets
security 137
DB2
securing commands 19, 69
SQL text 19
trace 19
DB2 resources 265–268
DB2CMD parameter 442
DB2CMDDF CLIST 106, 109
DB2CMDPE CLIST 106, 109
DB2SQL parameter 442
DBCTL resources 269–278
DCSTAT view, access to 218
default
access authorization 197
authorization, proprietary security 434
entity names 133
security parameters 137
deleting
security class definitions 169
detail application trace, basic security 18–19
DIAGSESS view, securing 210
DIAGSTOR view 201
DIAGSYS view, securing 212
disabling
basic security 119
enhanced security 142
Dynamic Parameter Manager, AutoOPERATOR 20

E

enhanced security
disabling 142
entity names 133–135
ESTAE protection 437
EXCP terminal, securing access through 79
EXECs (AutoOPERATOR)
EXEC Manager access 51
EXEC parameter in USERID member 439
EXEC Testing Facility 51
securing 20, 59
securing who can schedule 49
Time-Initiated EXEC requests 53
exits
AMSECU 435
SYSPROG and CSMON service 122

G

generic authorization 86, 434
global security parameter definitions
default parameters 182
GSO Record Options 146

I

IMS resources 269–278
IMS, securing transactions, command, and messaging within AutoOPERATOR 21
IMS-related parameters in USERID member 439

J

Journal log
  basic security 17
JRNLMSG parameter 439

L

libraries
  CLIST 105
  security parameters 137
Linux resources 283–287
logical parmlib concatentation and BBSEC 118
LTERM messages 439

M

MAINVIEW
  common resource definitions 197–204
  common views 369
MAINVIEW Alarm Manager
  resource definitions 234–238
  views 378–379
MAINVIEW Alternate Access
  applications security 415
  AutoLogon sessions 413
  CA-ACF2 416
  CA-TOP SECRET 423
  RACF 421
  securing 413–425
  terminal security 414
MAINVIEW Explorer
  resource definitions 239
  views 379
MAINVIEW for CICS
  CICSRACF CLIST 108
  resource definitions 240–262
  securing resources 240
  views 380–383
MAINVIEW for DATA ACCELERATOR Compression
  resource definitions 263–264
  views 384
MAINVIEW for DB2
  BBSEC TYPE statement 113
  CMD 69
  DB2 commands 69
  DB2CMDDF CLIST 106
  DB2CMDPE CLIST 106
  resource definitions 265–268
  views 385
MAINVIEW for DBCTL
  resource definitions 269–278
  views 386–388
MAINVIEW for IMS Online
  resource definitions 269–278
  views 386–388
MAINVIEW for IP
  resource definitions 279–282
  views 389–391
MAINVIEW for Linux - Servers
  resource definitions 283–287
  views 392–394
MAINVIEW for MQSeries
  see MAINVIEW for WebSphere MQ
MAINVIEW for OS/390
  resource definitions 214–233
  views 371–378
MAINVIEW for UNIX System Services
  resource definitions 288–295
  views 394–395
MAINVIEW for VTAM
  resource definitions 296–297
  views 397
MAINVIEW for WebSphere Application Server
  resource definitions 298–299
  views 398–399
MAINVIEW for WebSphere MQ
  resource definitions 300–322
  views 400–402
MAINVIEW SRM
  resource definitions 323–362
  views 403–409
MAINVIEW SYSPROG Services 23–33
  BBSEC TYPE statement 113
  resource definitions 363, 366
  views 410
MAINVIEW Total Object Manager
  BBSEC TYPE statement 113
  resource naming convention 14
  securing resources 70–78
MAINVIEW VistaPoint
  resource definitions 367–368
  views 410
MASK= 434
masks (#, *, +) 86, 435
migrating resource names 106
MIGUSER CLIST 105, 106
MVS commands, basic security 19
MVSCMD parameter (AutoOPERATOR) 439

N

naming convention
  overview 12
naming convention for resources
  for basic security 13
  for enhanced security 133

O

OS/390 resources 214–233

P

parameter library 137
PARMAUTH parameter 439
password utility 123
PERMIT syntax
  denying access 86
  granting access 85
Plex Manager
  resource definitions 205–213
  views 370–371
PMACC parameter 441
proprietarty security 429–442

Q

qualifying characters for masks (+ and *) 435

R

RACF 154
  adding resource classes to 155
  APPL access authority 422
  basic security 9
  controlling access to product resources 158
  creating profiles for security 157
  MAINVIEW Alternate Access 421
  proprietary security 431, 437
    CA-ACF2 437
  TERMINAL access authority 422
  user ID 436
RACFDEF 106
RACFDEF CLIST 105
recovering a deleted security class 174
REDEFINE syntax
  enhanced security 158
  for MAINVIEW products 82
  for RESOLVE PLUS services 84
remote users, modifying authorization 434
RESAUTH parameter (AutoOPERATOR) 439
resource names, creating
  for AutoOPERATOR 107
  for CICS 108
  for MAINVIEW for DB2 109
resource naming convention
  for basic security 13
  for enhanced security 133
resources
  CICS 240–262
  CMF MONITOR 214–233
  common MAINVIEW 197–204
  DB2 265–268
  DBCTL 269–278
  IMS 269–278
  Linux 283–287
  MAINVIEW Alarm Manager 234–238
  MAINVIEW Explorer 239
  MAINVIEW for CICS 240–262
  MAINVIEW for DATA ACCELERATOR Compression 263–264
  MAINVIEW for DB2 265–268
  MAINVIEW for DBCTL 269–278
  MAINVIEW for IMS Online 269–278
  MAINVIEW for IP 279–282
  MAINVIEW for Linux - Servers 283–287
  MAINVIEW for OS/390 214–233
  MAINVIEW for UNIX System Services 288–295
  MAINVIEW for VTAM 296–297
  MAINVIEW for WebSphere Application Server 298–299
  MAINVIEW for WebSphere MQ 300–322
  MAINVIEW SRM 323–362
  MAINVIEW VistaPoint 367–368
  OS/390 214–233
  Plex Manager 205–213
  storage 323–362
  TCP/IP 279–282
  UNIX 288–295
  VTAM 296–297
  WebSphere 298–322
resources
  MAINVIEW SYSPROG Services 366
resources
  MAINVIEW SYSPROG Services 363
RULEAUTH parameter (AutoOPERATOR) 439
Rules Processor, access to 19

S

security 431
  $GENERIC 434
  $RMTID 434
  $USERID 434
  administrative members 137
    BBMTSPnn 459
    BBMTSSnn 449
  administrative views
    SEPDEFL 178
  AMSECU 435
  basic 16
  CA-ACF2, *see* CA-ACF2
  CICS action services 34–47
  class definition
    default parameters 170
  defining
    to CA-ACF2 145
    to CA-TOP SECRET 160
    to RACF 154
  disabling basic 119
  disabling enhanced 142
  interface 195
  introduction 10
  MAINVIEW Alternate Access 413–425
  MAINVIEW FOCAL POINT 61
  MAINVIEW for CICS 61–67
  MAINVIEW for DB2 69
  MAINVIEW for DBCTL 61
  MAINVIEW for IMS 61
  MAINVIEW SYSPROG Services 23–33
  migrating from BMC Software proprietary security 429

planning 11–12
proprietary security 429–442
resource classes
deleting 174
resource names 197
trace parameter 440
viewing active 143
security class
defining $BOOLE 81
generics 86
security class definition
recovering deleted 174
security parameter library
sharing global security parameter definitions 137
SEPDEFL 178
storage resources 323–362
subsystem ID pointer 436
summary application trace, basic security 18
syntax for REDEFINE
enhanced security 158
MAINVIEW products 82
RESOLVE PLUS services 84
syntax notation xvi
SYSPROG command, access to 215, 222
SYSPROG services, access via AutoOPERATOR 22

T

TapeSHARE for AutoOPERATOR 21, 56
target
accessing BBI 17
TCP/IP resources 279–282
terminal security, MAINVIEW Alternate Access 414
TOM *see* MAINVIEW Total Object Manager
trace
authorization 440, 442
security 440
trace log, basic security 17
TRACE parameter in USERID member 440
TRALLOC parameter 442
TYPE statement in BBSEC member 113

U

UACC keyword 82
UNDeleting a security class 174
universal access (UACC keyword) 82
UNIX resources 288–295
user authorization
$GENERIC 434
$RMTID 434
$USERID 434
proprietary security 432
user exit routines
AMSECU 435
SYSPROG and CSMON service 122
USERID parameters 438–442

V

views
CMF MONITOR 371–378
common MAINVIEW 369
DCSTAT 218
DIAGSESS 210
DIAGSYS 212
MAINVIEW Alarm Manager 378–379
MAINVIEW Explorer 379
MAINVIEW for CICS 380–383
MAINVIEW for DATA ACCELERATOR Compression 384
MAINVIEW for DB2 385
MAINVIEW for DBCTL 386–388
MAINVIEW for IMS Online 386–388
MAINVIEW for IP 389–391
MAINVIEW for Linux - Servers 392–394
MAINVIEW for OS/390 371–378
MAINVIEW for UNIX System Services 394–395
MAINVIEW for VTAM 397
MAINVIEW for WebSphere Application Server 398–399
MAINVIEW for WebSphere MQ 400–402
MAINVIEW SRM 403–409
MAINVIEW SYSPROG Services 410
MAINVIEW VistaPoint 410
Plex Manager 370–371
VTAM resources 296–297

W

WebSphere resources 298–322

END USER LICENSE AGREEMENT
NOTICE

BY OPENING THE PACKAGE, INSTALLING, PRESSING "AGREE" OR "YES" OR USING THE PRODUCT, THE ENTITY OR INDIVIDUAL ENTERING INTO THIS AGREEMENT AGREES TO BE BOUND BY THE FOLLOWING TERMS. IF YOU DO NOT AGREE WITH ANY OF THESE TERMS, DO NOT INSTALL OR USE THE PRODUCT, PROMPTLY RETURN THE PRODUCT TO BMC OR YOUR BMC RESELLER, AND IF YOU ACQUIRED THE LICENSE WITHIN 30 DAYS OF THE DATE OF YOUR ORDER CONTACT BMC OR YOUR BMC RESELLER FOR A REFUND OF LICENSE FEES PAID. IF YOU REJECT THIS AGREEMENT, YOU WILL NOT ACQUIRE ANY LICENSE TO USE THE PRODUCT.

This Agreement ("**Agreement**") is between the entity or individual entering into this Agreement ("You") and BMC Software Distribution, Inc., a Delaware corporation located at 2101 CityWest Blvd., Houston, Texas, 77042, USA or its affiliated local licensing entity ("BMC"). "You" includes you and your Affiliates. "Affiliate" is defined as an entity which controls, is controlled by or shares common control with a party. IF MORE THAN ONE LICENSE AGREEMENT COULD APPLY TO THE PRODUCT, THE FOLLOWING ORDER OF LICENSE AGREEMENT PRECEDENCE APPLIES: (1) WEB BASED LICENSE AGREEMENT WITH BMC, (2) WRITTEN LICENSE AGREEMENT WITH BMC, (3) SHRINK-WRAP LICENSE AGREEMENT WITH BMC PROVIDED WITH THE PRODUCT, AND (4)THIS ELECTRONIC LICENSE AGREEMENT WITH BMC. In addition to the restrictions imposed under this Agreement, any other usage restrictions contained in the Product installation instructions or release notes shall apply to Your use of the Product.

PRODUCT AND CAPACITY. "Software" means the object code version of the computer programs provided, via delivery or electronic transmission, to You. Software includes computer files, enhancements, maintenance modifications, upgrades, updates, bug fixes, and error corrections.

"Documentation" means all written or graphical material provided by BMC in any medium, including any technical specifications, relating to the functionality or operation of the Software.

"Product" means the Software and Documentation.

"License Capacity" means the licensed capacity for the Software with the pricing and other license defining terms, including capacity restrictions, such as tier limit, total allowed users, gigabyte limit, quantity of Software, and/or other capacity limitations regarding the Software. For licenses based on the power of a computer, You agree to use BMC's current computer classification scheme, which is available at http://www.bmc.com or can be provided to You upon request.

ACCEPTANCE. The Product is deemed accepted by You, on the date that You received the Product from BMC.

LICENSE. Subject to the terms of this Agreement, as well as Your payment of applicable fees, BMC grants You a non-exclusive, non-transferable, perpetual (unless a term license is provided on an order) license for each copy of the Software, up to the License Capacity, to do the following:

(a) install the Software on Your owned or leased hardware located at a facility owned or controlled by You in the country where You acquired the license;

(b) operate the Software solely for processing Your own data in Your business operations; and

(c) make one copy of the Software for backup and archival purposes only (collectively a **"License"**).

If the Software is designed by BMC to permit you to modify such Software, then you agree to only use such modifications or new software programs for Your internal purposes or otherwise consistent with the License. BMC grants You a license to use the Documentation solely for Your internal use in Your operations.

LICENSE UPGRADES. You may expand the scope of the License Capacity only pursuant to a separate agreement with BMC for such expanded usage and Your payment of applicable fees. There is no additional warranty period or free support period for license upgrades.

RESTRICTIONS: You agree to **NOT**:

(a) disassemble, reverse engineer, decompile or otherwise attempt to derive any Software from executable code;

(b) distribute or provide the Software to any third party (including without limitation, use in a service bureau, outsourcing environment, or processing the data of third parties, or for rental, lease, or sublicense); or

(c) provide a third party with the results of any functional evaluation or benchmarking or performance tests, without BMC's prior written approval, unless prohibited by local law.

TRIAL LICENSE. If, as part of the ordering process, the Product is provided on a trial basis, then these terms apply: (i) this license consists solely of a non-exclusive, non-transferable evaluation license to operate the Software for the period of time specified from BMC or, if not specified, a 30 day time period (**"Trial Period"**) only for evaluating whether You desire to acquire a capacity-based license to the Product for a fee; and (ii) Your use of the Product is on an AS IS basis without any warranty, and **BMC, ITS AFFILIATES AND RESELLERS, AND LICENSORS DISCLAIM ANY AND ALL WARRANTIES (INCLUDING, WITHOUT LIMITATION, THE IMPLIED WARRANTIES OF MERCHANTABILITY, FITNESS FOR A PARTICULAR PURPOSE AND NON-INFRINGEMENT) AND HAVE NO LIABILITY WHATSOEVER RESULTING FROM THE USE OF THIS PRODUCT UNDER THIS TRIAL LICENSE ("Trial License")**. BMC may terminate for its convenience a Trial License upon notice to You. When the Trial Period ends, Your right to use this Product automatically expires. If You want to continue Your use of the Product beyond the Trial Period, contact BMC to acquire a capacity-based license to the Product for a fee.

TERMINATION. This Agreement shall immediately terminate if You breach any of its terms. Upon termination, for any reason, You must uninstall the Software, and either certify the destruction of the Product or return it to BMC.

OWNERSHIP OF THE PRODUCT. BMC or its Affiliates or licensors retain all right, title and interest to and in the BMC Product and all intellectual property, informational, industrial property and proprietary rights therein. BMC neither grants nor otherwise transfers any rights of ownership in the BMC Product to You. Products are protected by applicable copyright, trade secret, and industrial and intellectual property laws. BMC reserves any rights not expressly granted to You herein.

CONFIDENTIAL AND PROPRIETARY INFORMATION. The Products are and contain valuable confidential information of BMC (**"Confidential Information"**). Confidential Information means non-public technical and non-technical information relating to the Products and Support, including, without limitation, trade secret and proprietary information, and the structure and organization of the Software. You may not disclose the Confidential Information to third parties. You agree to use all reasonable efforts to prevent the unauthorized use, copying, publication or dissemination of the Product.

WARRANTY. Except for a Trial License, BMC warrants that the Software will perform in substantial accordance with the Documentation for a period of one year from the date of the order. This warranty shall not apply to any problems caused by software or hardware not supplied by BMC or to any misuse of the Software.

EXCLUSIVE REMEDY. BMC's entire liability, and Your exclusive remedy, for any defect in the Software during the warranty period or breach of the warranty above shall be limited to the following: BMC shall use reasonable efforts to remedy defects covered by the warranty or replace the defective Software within a reasonable period of time, or if BMC cannot remedy or replace such defective copy of the Software, then BMC shall refund the amount paid by You for the License for that Software. BMC's obligations in this section are conditioned upon Your providing BMC prompt access to the affected Software and full cooperation in resolving the claim.

DISCLAIMER. EXCEPT FOR THE EXPRESS WARRANTIES ABOVE, THE PRODUCT IS PROVIDED "AS IS." BMC, ITS AFFILIATES AND LICENSORS SPECIFICALLY DISCLAIM ALL OTHER WARRANTIES, INCLUDING, WITHOUT LIMITATION, THE IMPLIED WARRANTIES OF MERCHANTABILITY, FITNESS FOR A PARTICULAR PURPOSE, AND NON-INFRINGEMENT. BMC DOES NOT WARRANT THAT THE OPERATION OF THE SOFTWARE WILL BE UNINTERRUPTED OR ERROR FREE, OR THAT ALL DEFECTS CAN BE CORRECTED.

DISCLAIMER OF DAMAGES. IN NO EVENT IS BMC, ITS AFFILIATES OR LICENSORS LIABLE FOR ANY SPECIAL, INDIRECT, INCIDENTAL, PUNITIVE OR CONSEQUENTIAL DAMAGES RELATING TO OR ARISING OUT OF THIS AGREEMENT, SUPPORT, AND/OR THE PRODUCT (INCLUDING, WITHOUT LIMITATION, LOST PROFITS, LOST COMPUTER USAGE TIME, AND DAMAGE OR LOSS OF USE OF DATA), EVEN IF ADVISED OF THE POSSIBILITY OF SUCH DAMAGES, AND IRRESPECTIVE OF ANY NEGLIGENCE OF BMC OR WHETHER SUCH DAMAGES RESULT FROM A CLAIM ARISING UNDER TORT OR CONTRACT LAW.

LIMITS ON LIABILITY. BMC'S AGGREGATE LIABILITY FOR DAMAGES IS LIMITED TO THE AMOUNT PAID BY YOU FOR THE LICENSE TO THE PRODUCT.

SUPPORT. If Your order includes support for the Software, then BMC agrees to provide support (24 hours a day/7 days a week) (**"Support"**). You will be automatically re-enrolled in Support on an annual basis unless BMC receives notice of termination from You as provided below. There is a free support period during the one year warranty period.

(a) **Support Terms.** BMC agrees to make commercially reasonable efforts to provide the following Support: (i) For malfunctions of supported versions of the Software, BMC provides bug fixes, patches or workarounds in order to cause that copy of the Software to operate in substantial conformity with its then-current operating specifications; and (ii) BMC provides new releases or versions, so long as such new releases or versions are furnished by BMC to all other enrolled Support customers without additional charge. BMC may refuse to provide Support for any versions or releases of the Software other than the most recent version or release of such Software made available by BMC. Either party may terminate Your enrollment in Support upon providing notice to the other at least 30 days prior to the next applicable Support anniversary date. If You re-enroll in Support, BMC may charge You a reinstatement fee of 1.5 times what You would have paid if You were enrolled in Support during that time period.

(b) **Fees.** The annual fee for Support is 20% of the Software's list price less the applicable discount or a flat capacity based annual fee. BMC may change its prices for the Software and/or Support upon at least 30 days notice prior to Your support anniversary date.

VERIFICATION. If requested by BMC, You agree to deliver to BMC periodic written reports, whether generated manually or electronically, detailing Your use of the Software in accordance with this Agreement, including, without limitation, the License Capacity. BMC may, at its expense, perform an audit, at your facilities, of Your use of the Software to confirm Your compliance with the Agreement. If an audit reveals that You have underpaid fees, You agree to pay such underpaid fees. If the underpaid fees exceed 5% of the fees paid, then You agree to also pay BMC's reasonable costs of conducting the audit.

EXPORT CONTROLS. You agree not to import, export, re-export, or transfer, directly or indirectly, any part of the Product or any underlying information or technology except in full compliance with all United States, foreign and other applicable laws and regulations.

GOVERNING LAW. This Agreement is governed by the substantive laws in force, without regard to conflict of laws principles: (a) in the State of New York, if you acquired the License in the United States, Puerto Rico, or any country in Central or South America; (b) in the Province of Ontario, if you acquired the License in Canada (subsections (a) and (b) collectively referred to as the **"Americas Region"**); (c) in Singapore, if you acquired the License in Japan, South Korea, Peoples Republic of China, Special Administrative Region of Hong Kong, Republic of China, Philippines, Indonesia, Malaysia, Singapore, India, Australia, New Zealand, or Thailand (collectively, **"Asia Pacific Region"**); or (d) in the Netherlands, if you acquired the License in any other country not described above. The United Nations Convention on Contracts for the International Sale of Goods is specifically disclaimed in its entirety.

ARBITRATION. ANY DISPUTE BETWEEN YOU AND BMC ARISING OUT OF THIS AGREEMENT OR THE BREACH OR ALLEGED BREACH, SHALL BE DETERMINED BY BINDING ARBITRATION CONDUCTED IN ENGLISH. IF THE DISPUTE IS INITIATED IN THE AMERICAS REGION, THE ARBITRATION SHALL BE HELD IN NEW YORK, U.S.A., UNDER THE CURRENT COMMERCIAL OR INTERNATIONAL, AS APPLICABLE, RULES OF THE AMERICAN ARBITRATION ASSOCIATION. IF THE DISPUTE IS INITIATED IN A COUNTRY IN THE ASIA PACIFIC REGION, THE ARBITRATION SHALL BE HELD IN SINGAPORE, SINGAPORE UNDER THE CURRENT UNCITRAL ARBITRATION RULES. IF THE DISPUTE IS INITIATED IN A COUNTRY OUTSIDE OF THE AMERICAS REGION OR ASIA PACIFIC REGION, THE ARBITRATION SHALL BE HELD IN AMSTERDAM, NETHERLANDS UNDER THE CURRENT UNCITRAL ARBITRATION RULES. THE COSTS OF THE ARBITRATION SHALL BE BORNE EQUALLY PENDING THE ARBITRATOR'S AWARD. THE AWARD RENDERED SHALL BE FINAL AND BINDING UPON THE PARTIES AND SHALL NOT BE SUBJECT TO APPEAL TO ANY COURT, AND MAY BE ENFORCED IN ANY COURT OF COMPETENT JURISDICTION. NOTHING IN THIS AGREEMENT SHALL BE DEEMED AS PREVENTING EITHER PARTY FROM SEEKING INJUNCTIVE RELIEF FROM ANY COURT HAVING JURISDICTION OVER THE PARTIES AND THE SUBJECT MATTER OF

THE DISPUTE AS NECESSARY TO PROTECT EITHER PARTY'S CONFIDENTIAL INFORMATION, OWNERSHIP, OR ANY OTHER PROPRIETARY RIGHTS. ALL ARBITRATION PROCEEDINGS SHALL BE CONDUCTED IN CONFIDENCE, AND THE PARTY PREVAILING IN ARBITRATION SHALL BE ENTITLED TO RECOVER ITS REASONABLE ATTORNEYS' FEES AND NECESSARY COSTS INCURRED RELATED THERETO FROM THE OTHER PARTY.

U.S. GOVERNMENT RESTRICTED RIGHTS. The Software under this Agreement is "commercial computer software" as that term is described in 48 C.F.R. 252.227-7014(a)(1). If acquired by or on behalf of a civilian agency, the U.S. Government acquires this commercial computer software and/or commercial computer software documentation subject to the terms of this Agreement as specified in 48 C.F.R. 12.212 (Computer Software) and 12.211 (Technical Data) of the Federal Acquisition Regulations (**"FAR"**) and its successors. If acquired by or on behalf of any agency within the Department of Defense (**"DOD"**), the U.S. Government acquires this commercial computer software and/or commercial computer software documentation subject to the terms of this Agreement as specified in 48 C.F.R. 227.7202 of the DOD FAR Supplement and its successors.

MISCELLANEOUS TERMS. You agree to pay BMC all amounts owed no later than 30 days from the date of the applicable invoice, unless otherwise provided on the order for the License to the Products. You will pay, or reimburse BMC, for taxes of any kind, including sales, use, duty, tariffs, customs, withholding, property, value-added (VAT), and other similar federal, state or local taxes (other than taxes based on BMC's net income) imposed in connection with the Product and/or the Support. This Agreement constitutes the entire agreement between You and BMC and supersedes any prior or contemporaneous negotiations or agreements, whether oral, written or displayed electronically, concerning the Product and related subject matter. No modification or waiver of any provision hereof will be effective unless made in a writing signed by both BMC and You. You may not assign or transfer this Agreement or a License to a third party without BMC's prior written consent. Should any provision of this Agreement be invalid or unenforceable, the remainder of the provisions will remain in effect. The parties have agreed that this Agreement and the documents related thereto be drawn up in the English language. Les parties exigent que la présente convention ainsi que les documents qui s'y rattachent soient rédigés en anglais.

Notes

41300