Unicenter

NetSpy Network Performance User Guide

Computer Associates
The Software That Manages eBusiness

Booklist

This documentation and related computer software program (hereinafter referred to as the "Documentation") is for the end user's informational purposes only and is subject to change or withdrawal by Computer Associates International, Inc. ("CA") at any time.

This documentation may not be copied, transferred, reproduced, disclosed or duplicated, in whole or in part, without the prior written consent of CA. This documentation is proprietary information of CA and protected by the copyright laws of the United States and international treaties.

Notwithstanding the foregoing, licensed users may print a reasonable number of copies of this documentation for their own internal use, provided that all CA copyright notices and legends are affixed to each reproduced copy. Only authorized employees, consultants, or agents of the user who are bound by the confidentiality provisions of the license for the software are permitted to have access to such copies.

This right to print copies is limited to the period during which the license for the product remains in full force and effect. Should the license terminate for any reason, it shall be the user's responsibility to return to CA the reproduced copies or to certify to CA that same have been destroyed.

To the extent permitted by applicable law, CA provides this documentation "as is" without warranty of any kind, including without limitation, any implied warranties of merchantability, fitness for a particular purpose or noninfringement. In no event will CA be liable to the end user or any third party for any loss or damage, direct or indirect, from the use of this documentation, including without limitation, lost profits, business interruption, goodwill, or lost data, even if CA is expressly advised of such loss or damage.

The use of any product referenced in this documentation and this documentation is governed by the end user's applicable license agreement.

The manufacturer of this documentation is Computer Associates International, Inc.

Provided with "Restricted Rights" as set forth in 48 C.F.R. Section 12.212, 48 C.F.R. Sections 52.227-19(c)(1) and (2) or DFARS Section 252.227-7013(c)(1)(ii) or applicable successor provisions.

© 2001 Computer Associates International, Inc.

All trademarks, trade names, service marks, and logos referenced herein belong to their respective companies.

Contents

Chapter 1: Technical Overview

NetSpy Components 1–1
Network Data Collection 1–2
VTAM Interface 1–2
NCP Interface 1–3
TCP/IP Interface 1–5
Interactive Component 1–6
Reporting Component 1–7
Modeling and Recommendations 1–7
Modeling 1–8
Tuning Recommendations 1–8
NetSpy-to-NetSpy Communication 1–9
Benefits 1–9
Displaying Cross-NetSpy Data 1–9
How NetSpy Measures Network Response Times 1–10
Host and Network Response Time 1–10
Definite Response 1–11
Calculating Response Time in Special Cases 1–12
Backbone Network Response Time Measurement 1–13
Subareas 1–13
Virtual Route Data 1–14
LU 6.2 Sessions 1–15
Network Accounting 1–16
Dynamic Reconfiguration 1–16
Transaction and Buffer Traces 1–17
Transaction Traces 1–17
Buffer Traces 1–17
Performance Alerts 1–17
General Alerts 1–18
Graphic Alerts 1–18
Trace Alerts 1–19

Session Manager Interface 1–19
Monitoring an Application 1–20
Measuring Response Time in a Cross-Domain Environment 1–22
Measuring Response Time When Using a Session Manager 1–22
Integration with Unicenter 1–24
Powerful Reporting Capabilities 1–25
Additional Features 1–25
Access Security 1–25
VTAM Tuning Statistics 1–25
VTAM and I/O Buffer Statistics 1–26
Supported Operating Systems 1–26

Chapter 2: Coordinating Data from Multiple NetSpys

Monitor Total Network Performance 2–1
Calculate Response Times 2–2
Gather Data in Central Logs 2–2
Receive Alert Information about Your Entire Network 2–2
Produce Online Reports from Log Files in Other Hosts 2–2
Controlling NetSpy-to-NetSpy Communication 2–3
For More Information 2–4
Commands that Use Data from Other NetSpys 2–5
Required Parameters 2–5
Establishing NetSpy-to-NetSpy Communication 2–6

Chapter 3: Logging Data

Comparison of Log Destinations 3–1
Parameters Required for Logging 3–2
NCP Interface 3–3
Accounting Statistics 3–3
Purging the Database 3–3
Saving Logged Data for Processing 3–4
Gathering Data in Central Logs 3–4
Reporting from an Alternate Log File 3–4

Chapter 4: Using the Displays

Logging on to NetSpy 4–1
Selecting the Appropriate Option 4–2

Available Options 4–3
Main Menu 4–4
Using Function Keys With the Displays 4–5
Specifying Generic Names 4–6
Specifying Resource Lists 4–6
Resource List Initialization Menu 4–7
Resource List Display 4–8
Using the Online Help Facility 4–9
Field-level and Screen-level Help 4–9
Help for Commands 4–9
Help for Using Help 4–10
For More Information 4–10

Chapter 5: Using Explicit Commands

Issuing the Commands 5–1
Privileged Users 5–1
Generic Names 5–1
Notation Conventions 5–2
Summary of Commands 5–2
ACQUIRE Command (Privileged) 5–7
ALERT Command 5–7
ANALYZE Command 5–7
APPNMENU Command 5–8
BUFFMENU Command 5–8
COLLECT Command 5–8
CONNECT Command 5–12
DA Command 5–13
DALRT Command 5–14
DAR Command 5–14
DBUFRUSE Command 5–15
DCRPLUSE Command 5–15
DDIRS Command 5–16
DEFINE Command 5–16
DEFMON Command 5–17
DELETE Command 5–17
DELMON Command 5–17
DGALERT Command 5–18
DIF Command 5–18
DIFD Command 5–18
DIOBFUSE Command 5–19

DISCONN Command 5–19
DISMON Command 5–20
DMNPS Command 5–20
DN Command 5–20
DNCB Command 5–22
DNETH Command 5–22
DNFR Command 5–24
DNLIST Command 5–25
DNS Command 5–26
DNSA Command 5–28
DNTIC3 Command 5–28
DNTR Command 5–29
DNX25 Command 5–30
DRTP Command 5–32
DT Command 5–32
DTA Command 5–34
DTCPC Command 5–36
DTCPCD Command 5–36
DTCPS Command 5–37
DTCPV Command 5–37
DTNSTATS Command 5–37
DTOPO Command 5–38
DTR Command 5–38
DTSMENU Command 5–40
DUALERT Command 5–40
DUDPC Command 5–41
DUDPCD Command 5–41
DV Command 5–41
DVO Command 5–43
FORCEDR Command 5–44
GALRT Command 5–44
GALWARN Command 5–45
GRAPH Command 5–45
HELP Command 5–48
HOSTIPA Command 5–49
HOSTIPC Command 5–49
HOSTIPD Command 5–50
LOGOFF Command 5–50
MENU Command 5–50
MVS Modify Command 5–50
NCPRETRY Command 5–51

NDSP Command 5–51
NETSPY Command 5–52
NTNOPER Command 5–53
OPER Command 5–53
PNSA Command 5–53
PRINT Command 5–54
PSMF Command 5–58
PTASK Command (*Privileged*) 5–59
REPORT Command 5–59
RESOURCE Command 5–60
RLIST Command 5–60
SETMODE Command 5–61
SHUTDOWN Command 5–62
SNSA Command 5–63
SSMF Command 5–63
STASK Command (*Privileged*) 5–64
STAT Command 5–65
SUMMARY Command 5–65
SWITCH Command 5–69
TCPIP Command 5–69
TCPIPC Command 5–70
TCPIPH Command 5–70
TRACE Command 5–70
TRACED Command 5–71
TRACEO Command 5–71
TRACES Command 5–71
TRCD Command 5–71
VDSP Command 5–72
$PNETSPY Command 5–72

Chapter 6: Displaying Real-time Data

Requesting Cross-NetSpy Data 6–1
Navigating the Displays 6–2
Function Keys 6–2
Generic Names 6–2
Notes About Displayed Data 6–3
Viewing VTAM Application and Terminal Statistics 6–4
Menu and Displays 6–4
VTAM Application and Terminal Statistics Menu 6–5
Application Traffic and Response Time Screen 6–8

Application Response Time Distribution Screen 6–9
Terminal Traffic and Response Time Screen 6–10
Terminal Response Time Distribution Screen 6–12
Terminal Response Time Analysis Screen 6–13
Viewing NCP Statistics 6–15
Menus and Displays 6–15
NCP Statistics Selection Menu 6–16
Specifying Optional Parameters on Selection Criteria Menus 6–17
NCP/NWays Statistics Menu 6–18
NCP Statistics Screen 6–20
NCP Network Statistics Screen 6–21
Transmission Priority Statistics Screen 6–22
NTRI Resource Statistics Selection Criteria Menu 6–23
NTRI Network Statistics Screen 6–25
TIC3 Resource Statistics Selection Criteria Menu 6–26
TIC3 Network Statistics Screen 6–27
NCP X.25 Resource Statistics Menu 6–28
NCP X.25 Network Statistics Screen 6–30
Ethernet Resource Statistics Selection Criteria Menu 6–30
Ethernet Network Statistics Screen 6–32
Frame Relay Statistics Selection Criteria Menu 6–33
Frame Relay Network Statistics Screen 6–35
NCP List Screen 6–35
NCP Control Block Pool Statistics Selection Criteria Menu 6–36
NCP Control Block Statistics Screen 6–37
Using the Operator Command Menu 6–38
NCP Node Monitoring Status Screen 6–43
NetSpy-to-NetSpy Operator Screen 6–43
Viewing Virtual Route, Buffer, and Tuning Statistics 6–45
Menus and Displays 6–45
VR, Buffer, and Tuning Statistics Selection Menu 6–46
Virtual Route Statistics Selection Menu 6–46
Virtual Route Statistics Screen 6–48
Buffer Statistics Selection Menu 6–49
VTAM BufferPool Statistics Screen 6–50
CRPL Allocation by APPL Screen 6–50
I/O Buffer Allocation by APPL Screen 6–51
VTAM Tuning Statistics Selection Menu 6–51
Online Tuning Statistics Display 6–52
Tuning Statistics Display for NCPs 6–53
Tuning Statistics Display for Channel-to-Channel Adapters 6–54

Tuning Statistics Display for Local SNA Clusters 6–54
Tuning Statistics Display for Multi-Path Channels 6–55
Viewing and Monitoring TCP/IP Statistics 6–56
Menus and Displays 6–56
TCP/IP Statistics Selection Menu 6–57
TCP/IP Host Management Selection Menu 6–57
TCP/IP Host Management Change Menu 6–58
TCP/IP Host Management Add Menu 6–60
TCP/IP Display Menu 6–61
NetSpy TCP Connection Summary Display 6–64
NetSpy TCP/VTAM Connection Summary Display 6–65
NetSpy UDP Connection Summary Display 6–66
NetSpy Interface Summary Display 6–68
NetSpy Stack Summary Display 6–68
NetSpy TCP Connection Detail Display 6–70
NetSpy UDP Connection Detail Display 6–71
NetSpy Interface Detail Display 6–72
Viewing APPN and MNPS Statistics 6–73
Menu and Displays 6–73
APPN/MNPS Selection Menu 6–74
Global APPN Directory Services Data Screen 6–74
Global APPN Topology Data Screen 6–75
VTAM RTP Data Screen 6–76
MNPS Data Screen 6–77

Chapter 7: The NetSpy Batch History Building Program

NSYNHIST Program and Its Purpose 7–1
Input File Considerations 7–1
JCL for NSYNHIST 7–2
Control Statements 7–2
Return Codes 7–4
Reports 7–4

Chapter 8: Displaying Historical Data

Log Files 8–1
Requesting Cross-NetSpy Data 8–1
Notes About the Historical Displays 8–2
Report Differences 8–3

Using the Online Reports Facility 8–4
MAX#NRPT Parameter 8–4
Function Keys 8–4
Menu Selection 8–5
For More Information 8–5
Online Report Menu 8–6
How to Access 8–6
How to Use 8–6
Options for Online Reports 8–7
Resources for Online Reports 8–7
Additional Parameters 8–8
Online Report Display Menus 8–9
Common Parameters 8–9
Line/CU/TERM Summary Record Display Menu 8–11
LU (Terminal) Summary Record Display Menu 8–13
X.25 MCH Line Summary Record Display Menu 8–14
Application Summary Record 8–15
NCP Summary Record 8–16
X.25 MCH PU Summary Record 8–17
Virtual Route Summary Record 8–18
Channel Adapter Summary Record 8–19
X.25 Statistics Summary Record 8–20
X.25 Virtual Circuit Summary Record 8–21
NCP TIC3 Summary Record 8–22
NCP NTRI Summary Record 8–23
NCP Ethernet Summary Record 8–24
NCP Frame Relay Summary Record 8–25
Buffers Summary Record 8–26
Line/Cluster/ Terminal Summary/Graphic 8–26
LU (Terminal) Summary/Graphic 8–28
X.25 MCH Line Summary/Graphic 8–29
Application Summary/Graphic 8–30
NCP Summary/Graphic 8–31
X.25 MCH PU Summary/Graphic 8–33
Virtual Route Summary/Graphic 8–34
Channel Adapter Summary/Graphic 8–36
X.25 Virtual Circuit Summary/Graphic 8–37
TIC3 Summary/Graphic 8–38
NTRI Summary/Graphic 8–39
Ethernet Summary/Graphic 8–40
Frame Relay Summary/Graphic 8–41

TCP/IP Summary/ Graph Display Menu 8–42
Sample Online Reports 8–43
PRINT Report: Summary Record Display 8–43
GRAPH Report: Network Statistics 8–44
SUMMARY Report: Network Statistics 8–44
SUMMARY ALL Report (Application): Network Statistics 8–45
SUMMARY ALL Report (Terminal or SLU): Network Statistics 8–45
SUMMARY ALL Report(Channel Adapter): Network Statistics 8–46
SUMMARY ALL Report(TIC3): Network Statistics 8–46
TCP/IP SUMMARY ALL report 8–46

Chapter 9: Using the Trace Facilities

Configuring the Trace Feature 9–1
Types of Traces and How They Work 9–2
Transaction Traces 9–2
Trace Modes 9–2
Buffer Traces 9–3
Comparison of Trace Types 9–3
Using the Trace Facilities 9–4
Trace Facilities Menu 9–5
How to Access 9–5
How to Use 9–5
Trace Facilities Menu Options 9–5
Trace Display Parameters 9–6
How to Access 9–6
How to Use 9–6
Trace Display Fields 9–7
Online Trace Records Display 9–7
Trace Facilities Operator Commands 9–9
How to Access 9–9
How to Use 9–9
Trace Status Menu 9–12
How to Access 9–12
How to Use 9–13
Trace Status Menu APPL/LUNAME Options 9–13
Trace Status Display for APPLs 9–14
Trace Status Display for LUs 9–14
Printing Trace Records 9–15
Printing Trace Records in OS/390 9–15
Trace Print Utility Parameters 9–16

Filtering Trace Records for Use with TPNS 9–17
Filtering Trace Records in OS/390 9–17

Chapter 10: Using Alerts

Menus 10–1
Function Keys 10–2
Alert Systems Selection Menu 10–2
Using General Alerts 10–3
Generating Cross-Domain General Alerts 10–3
General Alerts System Selection Menu 10–4
Options on the General Alerts System Selection Menu 10–5
Defining Monitors for General Alerts 10–6
Using Qualifier Lists in Alert Monitors 10–9
Application Monitor Variable Definition Menu 10–9
Line Monitor Variable Definition Menu 10–10
NCP Resource VTAM Monitor Variable Definition Menu 10–10
Terminal (LU) Monitor Variable Definition Menu 10–11
NCP Monitor Variable Definition Menu 10–11
Virtual Route Monitor Variable Definition Menu 10–11
X.25 Monitor Variable Definition Menu 10–12
X.25 PUs or VCs Monitor Variable Definition Menu 10–12
NTRI Physical Link Monitor Variable Definition Menu 10–12
NTRI Logical Link Monitor Variable Definition Menu 10–13
TIC3 Link Monitor Variable Definition Menu 10–13
TIC3 PU Monitor Variable Definition Menu 10–13
Ethernet Physical Link Monitor Variable Definition Menu 10–14
Frame Relay Physical Link Monitor Variable Definition Menu 10–14
Frame Relay Logical Link Monitor Variable Definition Menu 10–15
Frame Relay PU Monitor Variable Definition Menu 10–15
Monitor Menu Variable Descriptions 10–15
Monitor Deletion Main Menu 10–17
Monitor Status Display 10–18
Global Alerts Display 10–19
User Alerts Display 10–20
Activating Alert Warnings 10–21
Inactivating Alert Warnings 10–21
Using Graphic Alerts 10–21
Graphic Alerts Main Menu 10–22
Graphic Alerts Customization Menu 10–23
Graphic Alerts Customization Menu Fields 10–24

Graphic Alerts Selection Menu 10–25
Viewing Graphic Alert Displays 10–27
Function Keys 10–27
Display Notes 10–28
GMAXENT Parameter 10–28
Using Trace Alerts 10–29
Trace Alert System Display 10–29

Chapter 11: Using Network Accounting

Log Destinations 11–1
Network Statistics 11–2
Statements to Include in the NCP Generation 11–3
For Session Accounting 11–3
For Gateway Accounting 11–3
Starting and Stopping Network Accounting 11–4
Starting Accounting Via the NCP Startup Parameters 11–5
For Session Accounting 11–5
For Gateway Accounting 11–5
Parameters 11–5
Starting Accounting from the Operator Command Menu 11–6
Start Network Accounting Screen 11–7
Network Session Accounting Status Display Screen 11–8
Displaying Network Accounting Status 11–8

Chapter 12: Using Modeling and Recommendations

About the Modeling and Recommendations Facility 12–1
Important Points to Remember 12–2
Choosing the Time Interval 12–3
Using Function Keys 12–3
Accessing the Modeling and Recommendations Screens 12–4
Parameters for Modeling and Recommendations 12–5
Selecting the Boundary Line 12–7
Choosing Options from the Network Analysis Menu 12–8
Network Analysis Menu Options 12–9
Modeling Line Hardware Characteristics 12–10
Modeling Line Traffic Characteristics 12–11
Modeling Line NCP Parameters 12–12
Displaying Complete Line Statistics 12–13

Viewing Tuning Recommendations 12–14

Chapter 13: Creating Batch Reports

Using Batch Reports 13–1
Input Files 13–2
Types of Reports You Can Request 13–2
Report Differences 13–3
Information That Determines Report Content 13–3
Using Batch Report Control Statements 13–4
Grouping Terminals 13–4
Resource Lists Specifications 13–5
Control Statement Syntax and Order 13–6
The SMF# (or SMFNO) Control Statement 13–7
The DEFINE Control Statement 13–7
The ECHO Control Statement 13–7
The NCPARSE Control Statement 13–8
The PAGESIZE Control Statement 13–8
PRINT, SUMMARY, and GRAPH Control Statements 13–9
The PRINT Control Statement 13–9
Statement Parameters 13–9
Requesting VTAM Statistics 13–10
Requesting VTAM Buffer Statistics 13–11
Requesting NCP Statistics 13–11
Requesting NTRI Statistics 13–12
Requesting X.25 Statistics 13–13
Requesting Ethernet Statistics 13–13
Requesting Frame Relay Statistics 13–14
Requesting TIC3 Statistics 13–14
Requesting APPN Directory Services Data 13–14
Requesting APPN Topology Data 13–15
Requesting APPN VTAM RTP Data 13–15
Requesting MNPS Application Data 13–15
Requesting MNPS Application Recovery Data 13–15
Requesting MNPS Coupling Facility Structure Data 13–15
Requesting TCP/IP Statistics 13–16
PRINT Statement Parameter Descriptions 13–16
The SUMMARY Control Statement 13–24
Statement Parameters 13–24
Requesting VTAM Statistics 13–24
Requesting FRAME RELAY Statistics 13–25

Requesting NCP Statistics 13–26
Requesting NTRI Statistics 13–26
Requesting X.25 Statistics 13–27
Requesting APPN Directory Services Data 13–27
Requesting APPN Topology Data 13–27
Requesting APPN VTAM RTP Data 13–28
Requesting TCP/IP Statistics 13–28
Requesting TIC3 Statistics 13–28
SUMMARY Statement Parameter Descriptions 13–29
The GRAPH Control Statement 13–35
Statement Parameters 13–35
Requesting VTAM Statistics 13–35
Requesting NCP Statistics 13–36
Requesting NTRI Statistics 13–37
Requesting X.25 Statistics 13–37
Requesting TCP/IP Statistics 13–38
GRAPH Statement Parameter Descriptions 13–38
Sample Reports 13–43
Sample Batch Control Statements 13–45
Sample JCL for the Batch Reports 13–45

Appendix A: Report and Display Headings

Table Key for Report and Display Headings A–1
Notation for Network Response Times A–1

Glossary

Index

Chapter 1

Technical Overview

NetSpy is a VTAM application designed for SNA (Systems Network Architecture) networks. It dynamically monitors your network and host response times, network traffic, and NCP/NPA statistics.

NetSpy Components

NetSpy is composed of four integrated components that help to improve your network performance:

- Network Data Collection
- Interactive Component
- Reporting
- Modeling and Recommendations

The following illustration shows the relationship between NetSpy's components, which are described in the following sections.

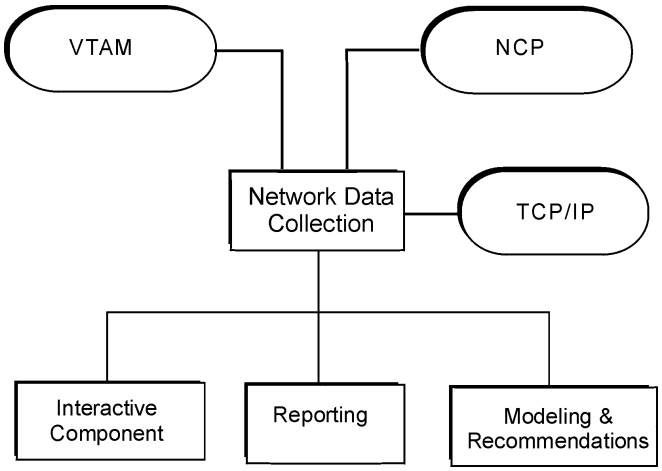

Network Data Collection

Network Data Collection continuously monitors the network and collects performance data. This data reflects real-time (current) and historical activity of the network. Network Data Collection sorts the data and stores it in either an SMF file or a log file.

Network Data Collection has three interfaces: VTAM, NCP, and TCP/IP. The next diagrams show Network Data Collection's interfaces in an OS/390 environment.

NetSpy's VTAM, NCP, and TCP/IP Interfaces in an OS/390 System

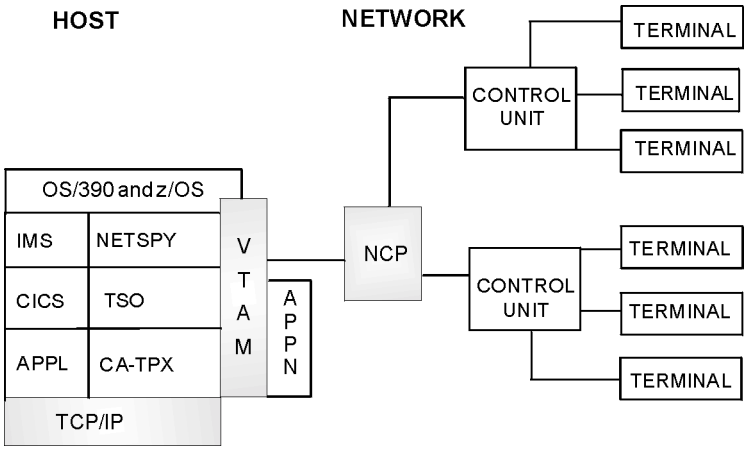

VTAM Interface

The Network Data Collection VTAM interface monitors specific VTAM sessions within the host. NetSpy interfaces with VTAM routines to collect traffic and response time statistics for all ongoing sessions for applications you specify, for example: TSO, IDMS, IMS, CICS, and VSCS.

The VTAM interface collects data that helps you set and evaluate service level objectives. The collected VTAM data includes:

- Application response time and traffic statistics
- Application response time distribution statistics
- Terminal response time and traffic statistics
- Terminal response time distribution statistics
- Terminal response time analysis
- Virtual route statistics

- Buffer statistics
- Tuning statistics

The VTAM interface monitors virtual routes, including LU 6.2 traffic, for statistics that help you determine where network delays are occurring. It also helps identify problems with application design.

See the section **Terminal Traffic and Response Time** Screen in the chapter "Displaying Real-time Data" for a sample VTAM data screen.

The VTAM interface requires no modifications to OS/390, or VTAM code. NetSpy can be started and stopped without affecting your network operations because all of NetSpy's interfaces with VTAM are put in place dynamically when NetSpy starts and are restored when it is stopped.

APPN Statistics

NetSpy also interfaces to VTAM's performance monitor interface (PMI) to collect Advanced Peer-to-Peer Networking (APPN) performance information. The following data is collected:

- Global APPN Directory Services data
- Global APPN topology data
- VTAM data for Rapid Transit Protocol (RTP) dynamic physical units
- Multi-node Persistent Session (MNPS) data

See the section **Viewing APPN and MNPS Statistics** in the chapter "Displaying Real-time Data" for a sample screen displaying global APPN Directory Services data.

NCP Interface

The NCP interface, which supports the Network Performance Analyzer (NPA) interface included in NCP version 2 or higher, monitors all the NCPs you specify. The collected NCP data includes:

- NCP processor and buffer use statistics
- Line, cluster, NTRI, X.25, Ethernet, Frame Relay, and TIC3 statistics
- NCP control block information
- NCP monitoring status
- Network accounting status

The NCP interface accesses network performance data through standard SNA interfaces to monitor the hardware-related aspects of your network's performance.

See the section **NCP Network Statistics Screen** in the chapter "Displaying Real-time Data" for a sample NCP data screen that summarizes network traffic and error statistics for various NCPs.

The NCP interface uses established VTAM and NCP user facilities and is independent of OS/390, and VTAM releases.

Network Accounting Statistics

NetSpy can collect and record network session accounting statistics using the NCP's SESSACC feature (ACF/NCP versions 4.3 or above). Statistics are recorded for boundary nodes in session with the NCP and VTAM host with which NetSpy is running. Session statistics include session start and stop configuration information as well as PIU and byte statistics for the session. Interval records are written based on user-supplied PIU and byte thresholds in either the NCP generation or the NetSpy parameters.

NetSpy can collect and record network gateway accounting statistics if in session with a gateway NCP at version 4.3.1, 5.2.1, or above that uses the NCP gateway accounting feature. Session start, stop, and interval records are written for SNI sessions in the same manner as network session statistics are for boundary nodes.

Dynamic Reconfiguration

NetSpy supports the ACF/NCP versions 4.3 or above option of providing dynamic reconfiguration information across the NCP's NPALU. NetSpy receives an update of any dynamic reconfiguration of the network from the NCP and then updates the network and session statistics accordingly.

Some Statistics in More Detail

Here are more detailed descriptions of some of the NCP data collected by NetSpy:

- X.25 data for multi-channel (MCH) lines, MCH physical units, logical units, and virtual circuits starting from NCP version 5.4 and NPSI version 3.4, and XI version 2.3
- NTRI data for logical and physical link token ring data from the TIC for NCP version 5.3.1 and above
- TIC3 physical line and logical PU data
- Physical link Ethernet adapter data for NCP version 6.2
- Frame relay DCE data from NCP version 6.1 and frame relay DTE data from NCP version 6.2
- Transmission priority data for NCP version 6.2
- Performance data for ESCON and CLA resources
- NCP control block statistics starting at NCP version 7.1

TCP/IP Interface

NetSpy collects TCP/IP data via SNMP agent. The interface requires the SNMP agent and subagent to be initialized.

The following data is available for collection:

- TCP connections
- TCP/IP stack overview
- UDP connections
- Interface data

The data is presented in real-time displays. Logging is optional for batch reporting of historical data. New items include:

- Support for multiple TCP/IP stacks
  - NetSpy processes control statements during initialization for each stack to be monitored, establishes a connection, and collects requested data for those stacks.
  - All the TCP/IP monitoring commands specify which TCP/IP stack to report on. In addition, you can issue new NetSpy commands to stop monitoring a given stack, as well as start monitoring a new stack, eliminating the need to recycle NetSpy if a TCP/IP stack is not available at startup.

  See the section NetSpy TCP Connection Summary Display in the chapter "Displaying Real-time Data" for a sample screen.

- New or revised commands and menus for NetSpy 6.0:

  The following table lists and new or enhanced commands and their corresponding menus or screens.

Command	Menu
DIF	Interface Summary Screen
DIFD	Interface Detail Screen
DTCPC	TCP/IP Summary Statistics Screen
DTCPCD	TCP/IP Detail Statistics Screen
DTCPV	TCP/VTAM Summary Statistics Screen
DTCPS	TCP/IP Stack Screen
DUDPC	UDP Connection Summary Screen
DUDPCD	UDP Connection Detail Screen
HOSTIPA	TCP/IP Host Management Screen where you can add a stack

Command	Menu
HOSTIPC	TCP/IP Host Management Screen where you can change a stack
HOSTIPD	TCP/IP Host Management Screen where you can delete a stack
TCPIP	TCP/IP Primary Menu
TCPIPC	TCP/IP Display Menu
TCPIPH	TCP/IP HOST Management Menu

Note: NetSpy's VTAM interface is not a requirement. However, the interface must be active for NetSpy to match TCP Telnet connections with VTAM information. NetSpy attempts to match the Target APPL specified in the TCP Telnet connection with an APPL being monitored by NetSpy.

Interactive Component

NetSpy's Interactive Component gives you instant access to all NetSpy information and allows authorized operators to control NetSpy execution. Functions of the Interactive Component include:

- Displaying real-time network activity
- Displaying historical network activity
- Tracing individual transactions
- Response time and traffic alerting
- Network accounting
- Modeling and recommendations
- APPN and MNPS activity
- TCP/IP traffic

Using various NetSpy screens, commands, and parameters, you can view specific information about network performance. The Interactive Component produces the displays and reports from the network statistics that Network Data Collection gathers.

A comprehensive online help system consisting of field-level and extended help for each menu and display makes the interactive component easy to use and understand.

NetSpy offers a wide variety of displays at your request. Below is an illustration of the facilities you can access from the NetSpy Main Menu.

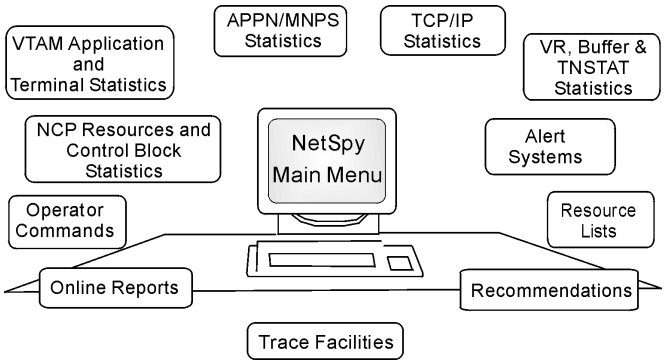

Reporting Component

NetSpy provides three kinds of batch reports to describe network activities:

- ***Exception Reports*** print the statistics for any network resource that exceeds your predefined threshold.
- ***Summary Reports*** provide a performance overview of a specified network resource in list format.
- ***Graphic Reports*** provide a performance overview of a specified network resource in graphic format.

NetSpy creates its batch reports from the data stored in SMF, the NetSpy Log, or the NetSpy Datacom Database—whichever you specify.

NetSpy reports on most aspects of network performance and equipment usage with the above batch formats. But you can also create customized reports with NetSpy's parameter-driven reporting system.

Modeling and Recommendations

The Modeling and Recommendations component is made up of two functions:

- A modeling facility that lets you create "what if" scenarios to determine the impact of changes to SNA boundary lines on total response time.
- A recommendations function that provides suggestions on how to improve your network response time in the *boundary line* areas of your network. (Boundary lines are lines connecting NCPs and their peripheral devices—see Backbone Network Response Time Measurement for more information.)

After you propose specific network changes, NetSpy can project changes in response times. For example, you may want to know how adding ten terminals to your current hardware configuration will affect network response time. In this case, NetSpy can calculate the impact of these additional terminals on network response time before you make the final decision to add them.

Modeling and Recommendations can also propose changes in the following areas:

- Hardware characteristics such as line speed
- Traffic characteristics such as message size
- NCP parameters

Modeling

You can model characteristics in each of the above areas on separate NetSpy screens. Each modeling screen shows both the actual and the proposed configurations for variables associated with the characteristic you want to model.

See the section Modeling Line Hardware Characteristics in the chapter "**Using Modeling and Recommendations**" for a sample screen that models the characteristics of line hardware. It allows you to enter proposed changes to your hardware configuration, and see how the changes affect the network.

Tuning Recommendations

After you have modeled your proposed network changes, the recommendations function advises you on how to optimize network response time. The recommendations function uses actual network data that has been written in log files to make suggestions for hardware and traffic characteristics, as well as NCP parameters.

See the section Viewing Tuning Recommendation in the chapter "**Using Modeling and Recommendations**" for a sample screen displaying final tuning recommendations. Each recommendation tells you what to change and explains the effect this change will have on your network.

NetSpy-to-NetSpy Communication

NetSpy provides a NetSpy-to-NetSpy communication interface that allows a NetSpy running on one host to communicate with one or more NetSpys running on other hosts in the same network. This feature lets you coordinate the data collected by multiple NetSpys from one location. This means that you can monitor response time and debug usage problems for your entire network from one NetSpy.

Whether you are a network manager, operator, systems programmer, or help desk person, you can monitor response time and debug usage problems for your entire network from a single NetSpy.

For one NetSpy to communicate with another NetSpy, a session must exist between them. NetSpy has several commands and parameters that allow you to establish NetSpy-to-NetSpy sessions and tailor the communication interface to meet your needs.

Benefits

This interface offers you the capability to:

- Monitor total network performance from one terminal
- Access one central log that contains data from all the NetSpys in your network
- Calculate response times without all NetSpys having sessions with the NCP
- Receive alert information about your entire network on one terminal
- Run online reports from NetSpy logs and in other hosts

Displaying Cross-NetSpy Data

To view current network statistics collected by other NetSpys, you issue a display command from your terminal for one or more NetSpys in session with your local NetSpy. The communications interface sends the requested data from the other NetSpys to your copy of NetSpy and merges the data into the display you requested. For example, if you request average user response times for all applications known to all NetSpys on your network, this data is merged into one display at your terminal.

How NetSpy Measures Network Response Times

Hardware monitors that reside either in the terminal controller or on a network communications line cannot accurately differentiate between *host* and *network* response time. NetSpy, however, is a software monitor. It resides in the host where it accurately differentiates between *host* response time and *network* response time.

Host and Network Response Time

NetSpy measures response time in the following way.

1. When a user at a terminal begins a transaction,[1] the transaction travels through the network and arrives at the host, taking *A* amount of time in the following diagram.

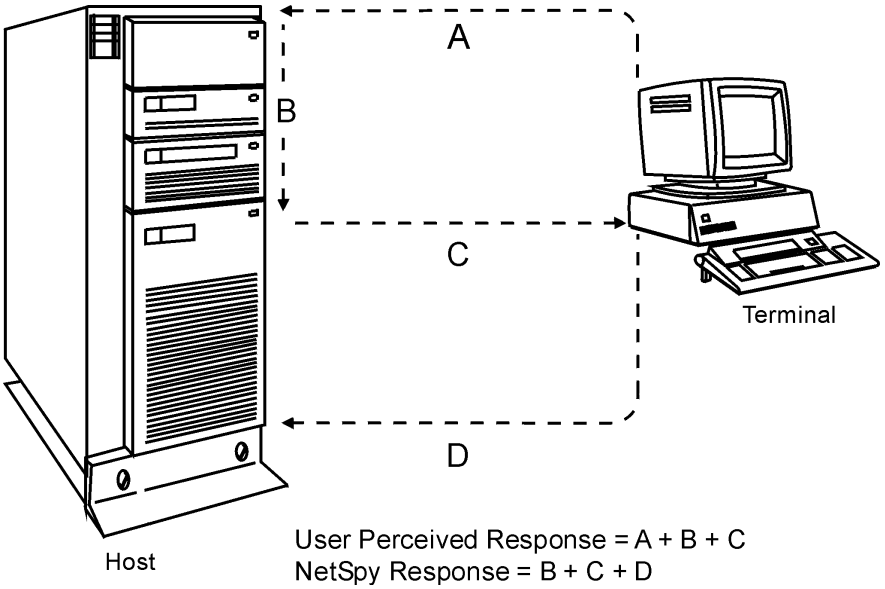

2. This transaction is processed by VTAM and the host application, taking *B* amount of time.

[1] NetSpy defines the start of a transaction for a 3270-type terminal as the time at which a user presses an AID (attention identification) key. The definition of the termination of a transaction can be tailored to specific applications by using NetSpy's EOT parameter on the APPL statement in the initialization parameters file.

3. The output of the transaction then travels through the network back to the terminal, taking *C* amount of time.
4. When *definite response* is requested in the output message, the terminal must send a response back to the host, taking *D* amount of time. Refer to the section below on definite response.

The response time the user perceives is the sum of *A* + *B* + *C*. But because NetSpy resides entirely within the host, it only measures the times *B*, *C*, and *D* but not the time *A*. Instead of the time *A*, NetSpy uses the time *D* as an approximation to *A*, and reports the sum *B* + *C* + *D* as the equivalent response time.

NetSpy makes various adjustments to *D* so that the approximation to *A* will be as close as possible. For example, *D* is adjusted based on the size of the input transaction and the speed of the line. With this technique, NetSpy is able to accurately approximate user-perceived response time.

Note: If the line speed at the NCP is set incorrectly or omitted, response time calculations will not be accurate. Line speed for each line is specified in the NCP source code through the SPEED parameter on a LINE statement (defining the speed to the NCP), or through the NPM.SPEED parameter on the line's LINE or GROUP statement (defining the speed to NetSpy). The value of NPM.SPEED overrides the value of the SPEED parameter.

Definite Response

Definite response is a VTAM function. It requests that the terminal send back a response to the application at the host indicating that the transaction has been fully processed (see the preceding diagram). Definite response is requested of the terminal during time *C*. If the terminal controller receives the completed transaction, it returns a positive response to the application (*D*).

For applications that do not use definite response, a unique NetSpy feature allows you to force a definite response, except for 4700 and 8100 type terminals, without the application's involvement. Because NetSpy can turn on definite response *outside* the application, it can measure network response times for these applications without contributing to application overhead. This is particularly important for CICS, since turning on definite response within CICS degrades CICS performance and user response time.

For terminals that do not allow NetSpy to force a definite response, NetSpy calculates the total network response time based on its VTAM and NCP statistics.

Calculating Response Time in Special Cases

Although NetSpy attempts to measure the network time for every transaction being monitored, certain types of terminals cause this measurement to be unavailable or inaccurate. In these cases, NetSpy has the unique capability to *calculate* the network response time. Examples include the following terminal types:

- ***Bisynchronous terminals:*** These terminals do not support the SNA definite response method. The network time, as measured by the round trip delay for the output to travel from the host to the terminal and an acknowledgment to return, does not include the polling delay. Therefore, NetSpy must calculate this delay to adjust its measured value for the network response time and obtain the true figure.
- ***SNA terminals that support delayed request mode:*** These terminals, mainly financial terminals like the 4700 and the 3600, do not return definite response immediately; therefore, this method cannot be used to measure the network response time. Instead, NetSpy must calculate the response time.

In these cases, NetSpy uses its VTAM and NCP statistics for the reporting interval to calculate the different components of the network response time.

The NetSpy-to-NetSpy communication interface enables a NetSpy not in session with an NCP to calculate response times when sessions exist among multiple NetSpys. One NetSpy must be in session with the NCP for this function to work.

The COLLECT POLLSTAT Statement

You use the COLLECT POLLSTAT statement (in the STARTPRM file) to request the statistics necessary to calculate response times. These statistics are collected by the NetSpy in session with the NCP and sent to other NetSpys. The NetSpys receiving this data then calculates response times.

Note: The NCP must be defined to all NetSpys requesting the statistics and to the NetSpy in session with the NCP.

Response Time Targets

Because these calculations are based on mathematical formulas, they represent an average of the network time for the terminal during the reporting interval. There might not be an exact match for an individual transaction. Therefore, these calculated network times cannot be used to populate the user-defined response time targets. Specifically, network/user targets are not available if NetSpy cannot measure the network response time. For bisynchronous terminals, the network/user targets are populated with the unadjusted network times measured by NetSpy. As such, they do not reflect NetSpy's adjustment for bid-to-poll delay.

Backbone Network Response Time Measurement

NetSpy can measure network delays at the backbone level, which is a feature that helps you determine exactly where a problem is occurring. The backbone level of a network is the connection between network nodes. An example of a node is the NCP and the host.

The backbone network *does not* include the boundary lines, which connect each NCP with its cluster controllers and terminals.

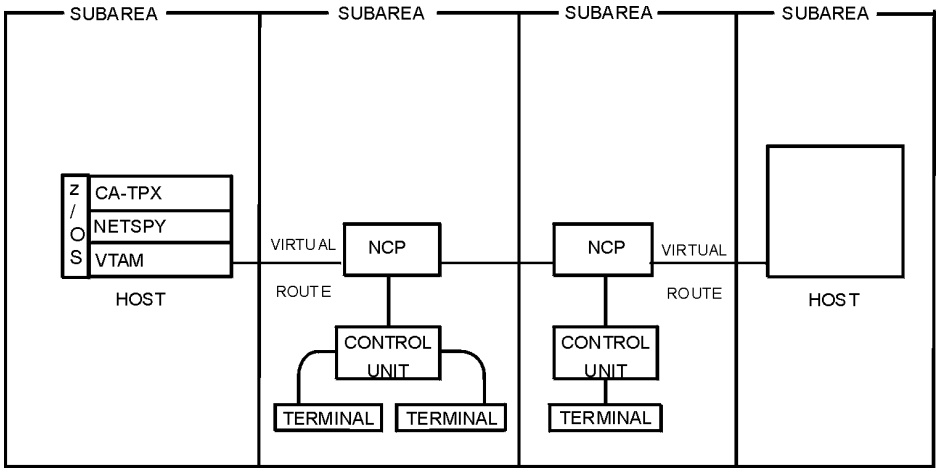

To measure data at the backbone level, NetSpy monitors traffic on each virtual route (VR) that has its origin or destination subarea in a host where NetSpy is running.

Subareas

The following diagram shows host and NCP subareas. The virtual route is the logical connection between subareas.

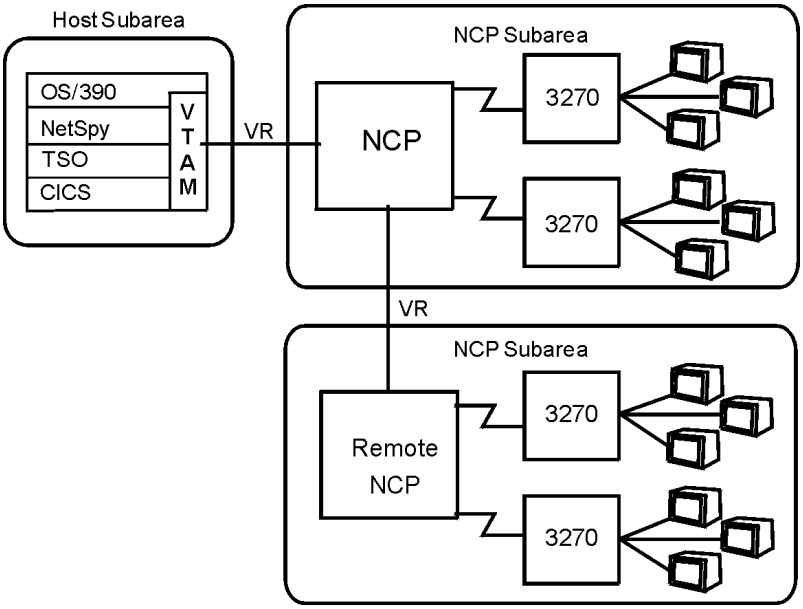

Virtual Route Data

When you request that NetSpy monitor the network at the backbone level, you can receive the collected statistics as real-time displays, online historical displays, or batch reports. In a large network with many subareas, NetSpy's ability to measure network delays proves invaluable in pinpointing the cause of poor network response time.

Virtual route statistics include the following data:

- Origin and destination subarea numbers
- Virtual route numbers
- Transmission priority assigned to the virtual route
- Average network response time
- Total number of path information units (PIUs)
- Average PIU size
- Number of LU-to-LU sessions on the route
- Current VR window size
- Minimum VR window size observed during the interval
- Maximum VR window size observed during the interval
- Average pacing window size
- Current status of the route (open, held, blocked)
- Current time the route is blocked or held
- Number of PIUs blocked or held during the interval
- Total time (in this interval)

The information in these reports help you identify delays at specific locations in your network. In a large multi-domain network, NetSpy's capability to measure network delays can prove invaluable in helping to pinpoint the cause for poor network response time.

LU 6.2 Sessions

For LU 6.2 sessions, NetSpy maintains response time measurements and PIU counts.

Response Time Measurements

In addition to measuring response times for LU 6.2 sessions that follow the normal "allocate (attach) and de-allocate" protocol, response times are reported for:

- LU 6.2 sessions that do not follow the "normal" protocol
- LU 6.2 sessions that open a conversation (transaction) for the whole session, in which case response time is measured with each "change of direction"

NetSpy automatically determines which method it uses to measure response time and reports this with a "LU62" or "RT62" flag in the displays and reports.

NetSpy measures and reports response times for LU 6.2 sessions that have PIUs following both inbound and outbound. The ***host*** response time is the time spent in the application before allowing the session partner to respond. The ***network*** response time is the time spent outside the application waiting for the session partner to respond.

If a session has data flowing only in one direction, then no response times can be reported. Average and worst response times are kept at both the session and application level.

PIU Count Statistics

NetSpy counts the number of inbound and outbound PIU chains, and for those LU 6.2 sessions that send all the input or output as middle-in-chain, it counts the number of inbound and outbound PIUs. (Any input containing a request header or any output containing a request or response header is considered a PIU.)

Both statistics are reported as the number of inputs and outputs, respectively.

Network Accounting

NetSpy supports two types of network accounting that you can use to collect complete session statistics for your network:

- Session accounting, supported in NCP versions 4.3 and above.
- Gateway accounting, supported in NCP versions 4.3.1 and 5.2.1

Network session accounting includes the collection of network statistics from the start of a session to its end for low-end (boundary) network sessions. Gateway accounting includes session statistics for SNI sessions. Both types of network statistics are NCP statistics.

The network statistics include the following items:

- Number of bytes sent during the session
- Number of bytes received during the session
- Number of PIUs (Path Information Units) sent during the session
- Number of PIUs received during the session
- Other session information

A portion of the network accounting status display is shown below. This screen indicates whether or not network session accounting is turned on, and the NCPs for which NetSpy is collecting data.

```
HOST=S008                        *** 16JAN2001.018 TUE 12:46:09 ***

                  *** NETWORK ACCOUNTING STATUS ***

(position cursor in front of NCP name to display more information)

NCP NAME  STATUS  LOGGING   START DATE/TIME  #SESS  BYTE THRES  PIU THRES
N13D5C0   NSA-ON    LOG    16JAN01 12:39:26      2        1000        100
          GWA-N/A
```

Network accounting records are written to the NetSpy Log, the NetSpy Datacom Database, or SMF. You can print the information in these accounting records in batch reports.

Dynamic Reconfiguration

For NCP versions 4.3 and above, NetSpy updates network session statistics to reflect dynamic reconfiguration in the network.

Transaction and Buffer Traces

NetSpy can trace transactions and individual PIUs that are sent to and received from terminals in your network. There are two types of traces: transaction and buffer.

Transaction Traces

Transaction traces are traces of entire transactions, from the beginning of the transaction to the end of transmission (EOT) character. There are two types of transaction traces: exception and transaction-all.

Exception traces trace only those transactions that exceed one or more thresholds that you specify. NetSpy alerts you of exception traces when they occur. Refer to Trace Alerts for more information.

Transaction-all traces trace all transactions.

See the Online Trace Records Display section in the chapter "**Using the Trace Facilities**" for an example of an online display of trace records you receive in response to a trace display request.

Buffer Traces

Buffer traces track all individual PIUs, whether or not they are part of transactions (including unsolicited writes). Buffer trace records are written if the trace buffer becomes full, or buffer tracing is stopped for all terminals and applications.

Performance Alerts

NetSpy can notify you when the actual performance time of a resource exceeds the acceptable threshold that you define for it. These notifications are called *alerts.* NetSpy offers three kinds of alerts:

- General
- Graphic
- Trace

General Alerts

General alerts track alerts throughout the entire network. General alerts are generated only for the network resources for which you have created *monitors*. You specify a monitor by telling NetSpy which resource to monitor for general alerts, the threshold time above which NetSpy should generate a general alert for that resource, and where to send the alert messages (to a terminal, to NetView, to the system console, or to Unicenter via SNMP). See the chapter "**Using Alerts**" for a sample general alert display.

Graphic Alerts

NetSpy's graphic alerts feature indicates when resources in your network exceed specified thresholds, and displays current data in bar chart format. Each bar represents a network response variable and is highlighted when the reading for the variable exceeds the specified threshold. You can also configure the feature to make the terminal beep when a threshold is exceeded.

A sample graphic alert screen is shown below. This screen depicts the average host and network response times for various applications compared to the worst host and network response times. It also displays the average user response time and the number of sessions for each application.

```
HOST=S008         MEASURED INTERVAL=  3.4M 19JAN1999.018 TUE 15:03:23  *R*
             ***  NETSPY GRAPHIC ALERTS DISPLAY ***
APPL        AVG. HOST RESP      AVG. NET RESP       AVG. USER RESP
VM20        29.5 ] >>>>>>>>>>    0.1 ]              29.6 ] >>>>>>>>>>
VM10         5.7 ] >>>>>>>>>>    0.9 ] ---           6.5 ] >>>>>>>>>>
TPXPROD      1.4 ] -----         0.3 ] -             1.7 ] ---
TSO08        1.3 ] ----          0.5 ] -             1.7 ] ---
TPX20PRD     1.1 ] ----          1.0 ] ---           2.1 ] ----
NETSPYXA     0.1 ]               0.3 ]               0.4 ]
TSO06        0.0 ]               0.0 ]               0.0 ]
              SCALE =    2.5      SCALE =    2.5      SCALE =    5.0
---->
APPL        WORST HOST RESP     WORST NET RESP      NO. OF SESSIONS
VM20        2.1M ] >>>>>>>>>>    0.2 ]                41 ] --
TPXPROD     26.9 ] >>>>>>>>>>   12.2 ] >>>>>>>>>>   1386 ] >>>>>>>>>>
TSO08       26.2 ] >>>>>>>>>>   12.2 ] >>>>>>>>>>    688 ] >>>>>>>>>>
TPX20PRD     9.5 ] >>>>>>>>>>    2.2 ] ----          114 ] -----
NETSPYXA     0.8 ] -            1.3 ] --             21 ] -
TSO06        0.0 ]              0.0 ]                 0 ]
                SCALE =    5.0      SCALE =    5.0      SCALE =   200
F1=HELP  F3=MENU  F4=DELETE  F7=SCROLL UP  F8=SCROLL DOWN
OPTIONALLY, ENTER A COMMAND BELOW
---->
```

The graphic alerts function receives its data from NetSpy's regular network monitoring functions (VTAM and NCP statistics) and operates independently from the tracing facilities. You can set up the feature to report on six resource types per screen and receive up to 48 graphs. Resource types include applications, lines, LUs (terminals), NCPs, PUs (clusters), and VRs (virtual routes).

You can use graphic alerts to compare data from several different resources simultaneously on one screen. For example, you can select four resources to be graphed, with one variable each. NetSpy will automatically divide the screen into four sections and display a graph in each section.

Trace Alerts

Trace alerts notify you when the network, host, or user response time has exceeded the threshold that you have specified. When a trace alert is generated, NetSpy creates an exception trace entry. You can display trace alert statistics online.

See the chapter "**Using Alerts**" for a sample trace alert display that lists trace alerts for various terminals, providing host and network response times.

Session Manager Interface

The session manager interface enables NetSpy to report complete statistics for all sessions established through a session manager.

When your installation uses a session manager such as CA-TPX or CA-Teleview, the terminals are logged on to the session manager, which establishes separate *virtual* sessions to various applications on behalf of the user. In this situation, a network monitor normally cannot determine which virtual sessions are associated with which physical terminal. If a terminal accesses an application through the session manager, most network monitors can tabulate the host and network response times only between the terminal and the session manager (provided the session manager uses definite response or you request dynamic definite response for the session manager). This means that no data is collected for the virtual session that the terminal has with the actual application *through* the session manager.

NetSpy, however, *does* report complete statistics for all those sessions established through the session manager. It allows you to monitor your network performance while running the session manager and still obtain all of the vital performance statistics for your network.

NetSpy gathers complete statistics via its session manager interface, illustrated below.

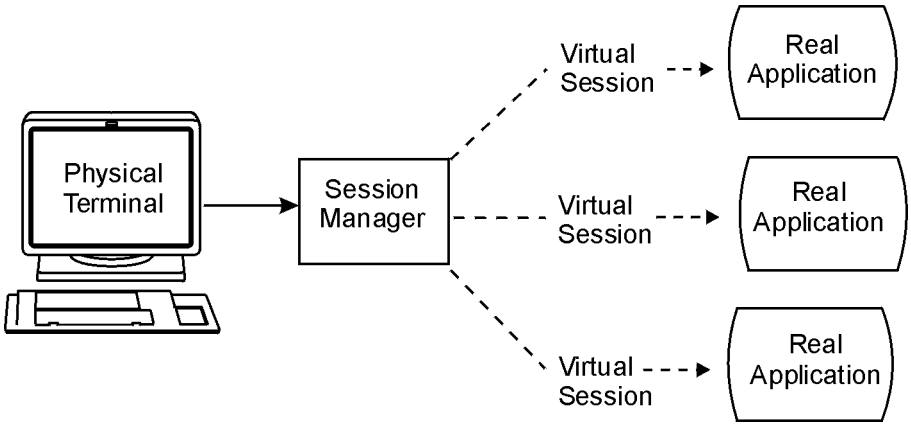

The session manager interface notifies NetSpy of new session activation or a session switch. NetSpy then uses this information to correlate the terminal statistics with the real application being accessed. You receive complete reporting between the physical terminal and the session manager, and between the physical terminal and the real application. NetSpy can monitor cross-domain applications when terminals are accessing them through a session manager that is running in the same host as NetSpy. Your statistics will show real terminal names and end-to-end response times for all sessions.

Monitoring an Application

The illustration below shows the flow of traffic for a logical unit (LU1) accessing an application via NetSpy's Session Manager Interface. As already mentioned, this interface allows you to receive performance statistics between LU1 and the session manager, and between LU1 and the real application.

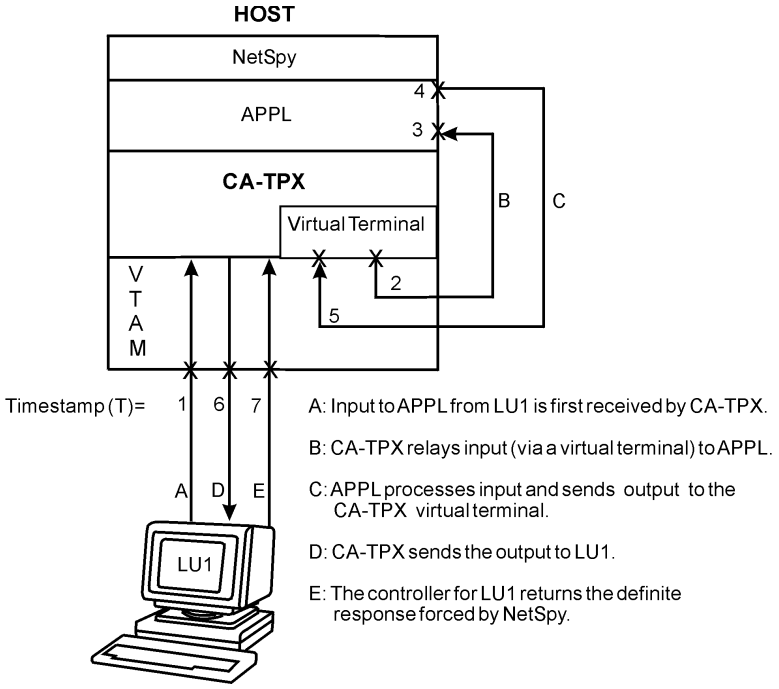

Using this scenario, NetSpy calculates response times for the physical and virtual sessions as follows:

Response Times for the Physical Session between LU1 and the Session Manager
Host Time = T6 - T1 (This number includes both session manager and application processing time.)
Network Time = T7 - T6 + adjustments for Definite Response (DR)

Response Times for the Virtual Session
Host time = T5 - T3 (If the application is in another domain, the host time will be T5 - T2.)
Network time = T7 - T6 + adjustments for DR

Note: A portion of the VTAM processing time between the session manager and the application is not included in either host or network time; however, this amount of time is normally so small as to be insignificant. Note also that the network time is the same for both the physical and the virtual session.

Measuring Response Time in a Cross-Domain Environment

Cross-domain communication involves the transmission of data across two or more domains, as shown in the illustration below.

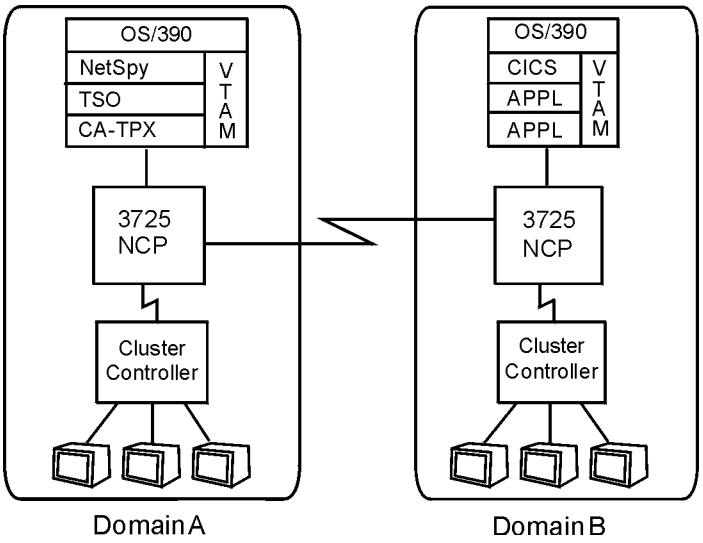

For NetSpy to monitor one of these cross-domain sessions, it must reside in the same host with the VTAM application being monitored. For example, if NetSpy is running in domain A (as shown above), and a VTAM application in domain A has a session with a terminal in domain B, NetSpy can monitor this session.

If you access a cross-domain application with a session manager running in the same domain as NetSpy, NetSpy can monitor this session and report complete statistics. For example, you access an application in domain B with a session manager in domain A. NetSpy resides in domain A also; therefore, it can monitor the session.

Measuring Response Time When Using a Session Manager

The following illustration shows the flow of traffic for a logical unit (LU1) accessing a cross-domain application via the CA-TPX session manager. Both NetSpys can report on this session, but they do so in different ways as described below.

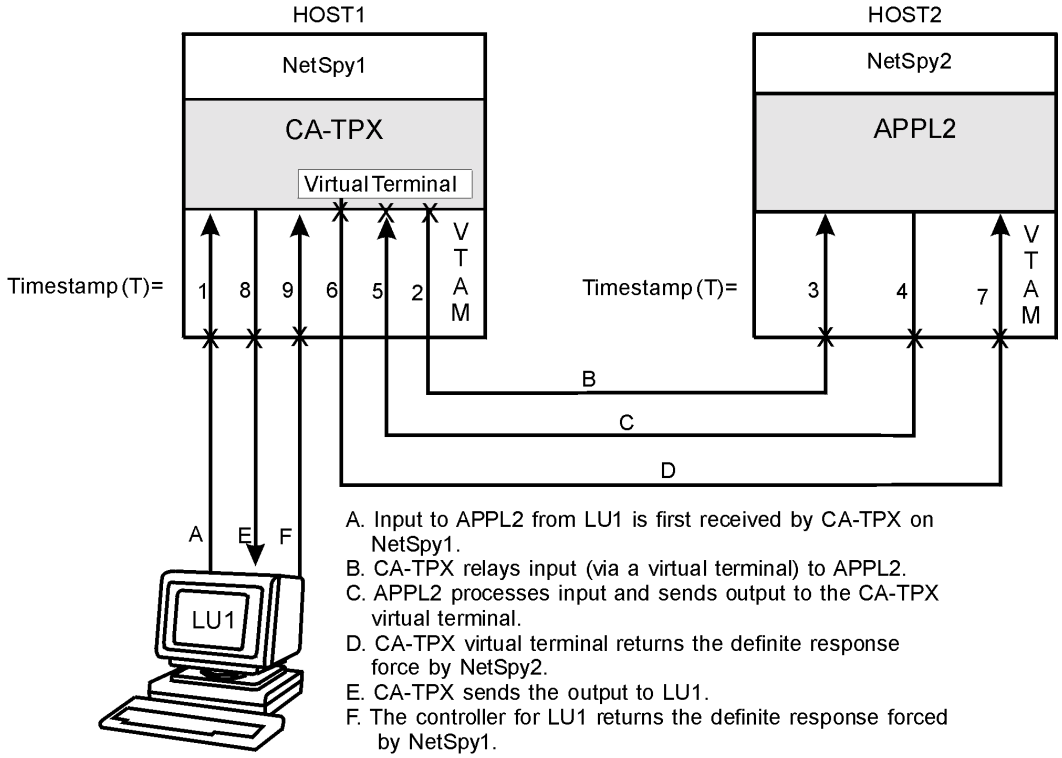

NetSpy 1

NetSpy1 will write a Type T record for the session between LU1 (a physical terminal) and CA-TPX (an application). This record will contain data for an entire interval for all transactions entered by LU1 regardless of what other applications the transactions may have been passed on to. In the case when a transaction is sent by LU1 destined for APPL2, NetSpy calculates the response times as follows:

Response Times for the Physical Session between LU1 and the Session Manager
Host time = T8 - T1
Network time = T9 - T8 + adjustments for Definite Response (DR)

Adjustments relate to the comparison of definite response data size to the actual data input size for calculating network time.

NetSpy1 can also monitor the virtual terminal session to APPL2. If the session manager interface is active, this session will be mapped back to LU1. In this case, NetSpy1 will write a Type T record for the virtual terminal session with APPL2, but the record will show LU1 as the terminal name. In addition, the network time from the CA-TPX-LU1 session will be recorded. NetSpy will calculate the response times as follows:

Response Times for the Virtual Session
Host time = T5 - T2
Network time = T9 - T8 + adjustments for DR (taken from PT session to CA-TPX)

NetSpy 2

NetSpy2 will write a Type T record for the session between the CA-TPX virtual terminal and APPL2. This record will contain information on all transactions passed from the particular virtual terminal to APPL2. When a transaction is sent by LU1 and forwarded to APPL2 by the virtual terminal, NetSpy will calculate the response times as follows:

Response Times for the Virtual Session
Host time = T4 - T3
Network time = T7 - T4 + adjustments for DR

NetSpy2 can only see traffic that goes in and out of the VTAM in Host2. Since LU1 did not directly enter inputs to Host2, NetSpy2 does not know that LU1 exists, and therefore cannot report that transactions actually started at LU1.

Note: This scenario explains how CA-TPX works; however, other session managers do not return the definite response immediately on the cross-domain session. In that case, traffic line D and timestamps T6 and T7 will occur last. Ask your vendor about how your particular session manager works.

Integration with Unicenter

NetSpy's integration with Unicenter allows you to manage your SNA resources from a Windows NT workstation.

NetSpy can act as an SNMP agent to send SNA configuration information and alerts to Unicenter (an SNMP manager). You can view historical reports as well as your SNA configuration and NetSpy alerts on the Unicenter map using Unicenter or Unicenter SNA Manager Option.

To use this feature, you must install the following software:

- The Unicenter Services for z/OS and OS/390
- CA-Datacom/AD (if you do not already have CA-Datacom/DB installed)
- CA-Datacom Server

NetSpy's configuration manager updates the map of SNA resources at regular intervals. An alert appears on the Unicenter map when an abnormal condition is detected and is removed when the condition is returned to normal.

Powerful Reporting Capabilities

In addition to making NetSpy data accessible to Unicenter users, CA-Datacom provides you with powerful ad hoc reporting capabilities.

You can write reports against NetSpy historical data using software packages such as CA-Dataquery on the mainframe. On the PC, if you have the CA-Datacom Server installed, you have SQL access using an ODBC tool, such as CA-Visual Express.

Additional Features

Other features of NetSpy include:

Access Security

You can use NetSpy's internal security mechanism to control network access. During the installation process, two classes of NetSpy users can be defined:

- Those privileged to execute all commands
- Those privileged to execute display commands only

VTAM Tuning Statistics

NetSpy lets you review VTAM tuning statistics for NCPs, channel-to-channel adapters, and local SNA clusters. These statistics are identical to those generated through the VTAM TNSTAT command. These statistics tell you how efficiently data is being transferred between a host and an SNA or communications controller, or between VTAM and a host attached through a channel-to-channel adapter.

VTAM and I/O Buffer Statistics

NetSpy displays other VTAM statistics to help you determine whether or not VTAM is running efficiently. You can review the following statistics and then make the necessary changes to VTAM:

- VTAM buffer statistics
- CRPL usage by application
- I/O buffer usage by application

Supported Operating Systems

NetSpy 6.0 runs under these versions of the OS/390 and z/OS operating systems:

- z/OS – 1.1 and above
- OS/390 – 1.1 and above

NetSpy runs as a job or a started task in its own address space under OS/390. Refer to the section Network Data Collection for graphical representation of how NetSpy fits into your system.

Chapter 2

Coordinating Data from Multiple NetSpys

The following describes the tasks you can accomplish through NetSpy-to-NetSpy communication.

Monitor Total Network Performance

Because all the NetSpys running on the network can communicate with each other, you can monitor total network performance from one terminal. By logging on to one NetSpy at one host, you can gather current VTAM and NCP statistics from the other NetSpys in session with your copy of NetSpy. You can then view all these statistics at your terminal.

To view current network statistics collected by other NetSpys, you issue a display command from your terminal for one or more NetSpys in session with your copy of NetSpy. The NetSpy-to-NetSpy interface collects the requested data from the other NetSpys to your copy of NetSpy and merges the data in the display you requested. For example, if you request average user response times for all applications known to all NetSpys in your network, this data will be merged in a display at your terminal.

Calculate Response Times

The NetSpy-to-NetSpy communication interface enables a NetSpy not in session with an NCP to give *calculated* response times for sessions existing in one of the NetSpys. One NetSpy, however, must be in session with the NCP for this function to work.

You use the COLLECT POLLSTAT statement in STARTPRM to request the statistics necessary to calculate response times. These statistics come from the NetSpy in session with the NCP and are sent to the other NetSpys. The NetSpys receiving this data then calculates response times.

Note: The NCP must be defined to all NetSpys requesting the statistics and to the NetSpy in session with the NCP.

Gather Data in Central Logs

The NetSpy-to-NetSpy communication interface uses the COLLECT command or COLLECT parameter (in STARTPRM) to direct a NetSpy in one host to gather data from other NetSpys. The remote NetSpys send this data to the requesting NetSpy in the NetSpy-to-NetSpy interface at an interval you specify and then merges the data in the central logs, creating a central location for all your network information. The COLLECT command and parameter allow you to specify which log data you want sent to the central logs.

Receive Alert Information about Your Entire Network

You can monitor alerts for your entire network from one terminal. By logging on to a NetSpy in one host, you can receive alert information from other NetSpys in session with your copy of NetSpy.

To receive this data, you issue an alert command to all NetSpys from which you want alerts. When alerts occur at the other NetSpys, the NetSpy-to-NetSpy communication interface sends this data to your copy of NetSpy and then merges and displays it at your terminal.

Produce Online Reports from Log Files in Other Hosts

You can review historical activity for your entire network because the NetSpy-to-NetSpy communication interface lets you request reports from the NetSpy logs of the other NetSpys with which your NetSpy is in session. If the interface is already merging data in a central log on your copy of NetSpy, the statistics for the report will be taken from this log rather than the logs in the other hosts.

Controlling NetSpy-to-NetSpy Communication

For one NetSpy to communicate with another NetSpy, a session must exist between them. The NSYXNAME parameter and the CONNECT parameter and command allow you to direct two or more NetSpys to establish a session. The following table explains the parameters and commands available to you for tailoring the NetSpy-to-NetSpy communication interface to meet your needs.

Name	Description
COLLECT command	Allows one central NetSpy to collect VTAM and NCP data from other NetSpys in one or more central logs.
COLLECT statement	Enables one central NetSpy to collect VTAM and NCP data from other NetSpys in its own SMF logs. You specify this parameter in the STARTPRM member.
COLLECT POLLSTAT statement	Enables the transfer of NCP data from one NetSpy to another for the purpose of calculating response time. You specify this parameter in STARTPRM.
CONNECT command	Tells NetSpy to establish a NetSpy-to-NetSpy session with another NetSpy. You issue this command online from the NetSpy-to-NetSpy Status screen. In this case, you do not have to specify the CONNECT parameter in STARTPRM, but you must specify the NSYXNAME parameter in INITPRM for all NetSpys that are to communicate with each other.
CONNECT statement	Tells NetSpy to establish a NetSpy-to-NetSpy session with another NetSpy at startup time. You specify this parameter in the STARTPRM member.
DISCONN command	Terminates a NetSpy-to-NetSpy session.
NETSPY command	Indicates which NetSpy's data you want included in the displays. You set this display mode on a global user basis from the command line of any screen.
NETSPY operand	Indicates which NetSpy's data you want included in the displays. You add this operand to specific display commands (DA, DAR, DN, DNS, DT, DTA, DTR, DV), making it effective for that display only. The NetSpy-to-NetSpy communication interface communicates with all NetSpys specified on the NETSPY operand.
NSYXNAME statement	Tells NetSpy to enable NetSpy-to-NetSpy or NetSpy-to-NetMaster communication. You specify this parameter in the INITPRM member at NetSpy startup. You cannot activate any NetSpy-to-NetSpy sessions or NetSpy-to-NetMaster sessions without specifying this parameter.
NTNOPER command	Displays the NetSpy-to-NetSpy Operator screen, where you can check the status of NetSpy-to-NetSpy communication and start or stop NetSpy-to-NetSpy sessions.

For More Information

For more information about the parameters, operands, and commands in the preceding table, refer to the following chapters in the *NetSpy Administrator Guide*:

"Defining Initialization Parameters"

"Defining Startup Parameters"

You can also refer to the descriptions of the following commands in this manual:

- COLLECT Command
- CONNECT Command
- DA Command
- DAR Command
- DISCONN Command
- DN Command
- DNS Command
- DT Command
- DTA Command
- DTR Command
- DV Command
- NETSPY Command
- NTNOPER Command (Privileged)

Commands that Use Data from Other NetSpys

When the following commands are issued online from one NetSpy in session with other NetSpys, data can be collected and displayed or logged from other NetSpys, providing that NetSpy-to-NetSpy communication is active:

COLLECT	COLLECT POLLSTAT	DA
DAR	DGALERT	DISMON
DN	DNETH	DNFR
DNS	DNTIC3	DNTR
DNX25	DT	DTA
DTR	DUALERT	DV
GRAPH	PRINT	SUMMARY

Required Parameters

For these commands to be able to use data from other NetSpys, you must have previously specified the following commands and parameters:

- The NSYXNAME parameter in the respective INITPRM members for all NetSpys that are to communicate with each other.
- The CONNECT command online or CONNECT statement in STARTPRM, stating which NetSpys are to communicate with each other. These NetSpys are identified by their *nsyxnames* in the respective INITPRM members.
- The NETSPY command or operand that identifies which NetSpy's data you want to see.

Establishing NetSpy-to-NetSpy Communication

To establish communication between two or more NetSpys, follow the procedure outlined below.

1. Define the NetSpy applications to VTAM on each CPU.

```
CPU1 - SYS1.VTAMLST(APNETSPY)
 APNETSPY  VBUILD TYPE=APPL
 NETSPY1   APPL   AUTH=(ACQ)
 NETSPX1   APPL   AUTH=(ACQ)

CPU2 - SYS1.VTAMLST(APNETSPY)
 APNETSPY  VBUILD TYPE=APPL
 NETSPY2   APPL   AUTH=(ACQ)
 NETSPX2   APPL   AUTH=(ACQ)
```

2. *If you have already defined CPU1 in CPU2's adjacent SSCP table, and CPU2 in CPU1's adjacent SSCP table, skip to step 3.* If not, define NETSPX1 as a cross-domain resource to VTAM in CPU2, and define NETSPX2 as a cross-domain resource to VTAM in CPU1.

3. Set up the NetSpy-to-NetSpy initialization parameters.

```
CPU1 - NETSPY.CNTL(INITPRM1)
 NSYNAME = NETSPY1
 NSYXNAME = NETSPX1

CPU2 - NETSPY.CNTL(INITPRM2)
 NSYNAME = NETSPY2
 NSYXNAME = NETSPX2
```

4. Set up the NetSpy-to-NetSpy startup parameters. In one of the CPUs, issue the CONNECT command:

```
CPU1 - NETSPY.CNTL(STARTPRM1)
 CONNECT NETSPY=NETSPX2

CPU2 - NETSPY.CNTL(STARTPRM2)
 CONNECT NETSPY=NETSPX1
```

At this point, you should be able to issue the various COLLECT commands based on the requirements of your site.

Chapter 3

Logging Data

NetSpy uses logged data for the online historical displays, batch reports, and modeling and recommendations. NetSpy can log data to any of the following log destinations:[1]

- The NetSpy Log, made up of log files LOG1 and LOG2
- The NetSpy Datacom Database
- SMF

Comparison of Log Destinations

The following table describes which NetSpy features can be used with each destination.

Log Destination	Used by These NetSpy Features
SMF	■ Batch reports
Log	■ Batch reports ■ Online data displays (historical)
Database	■ Batch reports (only after conversion using NSYDBCV) ■ Online data displays (historical) ■ Enables NetSpy data to Unicenter

[1] The NetSpy product documentation uses the word “log” to refer generically to any or all possible log destinations. When referring to a specific destination, the destination is capitalized, for example, “Log” or “Database.”

When you request historical displays or reports, NetSpy searches the Log or Database for the specified information. Data for the historical online displays comes from the Log if it is active. If the Log is not active, but the Database is, data comes from the Database. Data does not come from SMF. When you request a historical display, NetSpy only reports on the data matching the *current* LOGTYPE.[2] It does not report data with a different LOGTYPE.

To get a batch report containing data from the Database, you must first convert the database to standard SMF format. (See the NSYDBCV member of the NETSPY.CNTL data set.)

When you request a batch report, NetSpy reports on the data matching the record number on the SMF or LOGTYPE statement of the INITPRM member.

In an OS/390 system, data can be collected in any combination of the Log, Database, and SMF. The amount of space that you allocate to the log and database files determines the length of the period for which statistics are available. (The amount of data that can be collected and stored depends on the size of the files.) You should allocate as much space as you need. For example, if you want to display statistics for the previous three days, you must have enough space in the files to store this amount of data. You must use the JCLALLOC job provided to allocate these files.

Parameters Required for Logging

In the initialization parameters (INITPRM member), specify the following parameters to use the logs:

- LOGSTART= to begin logging to the Log.
- SMF=*a non-zero number* to begin logging to SMF.
- DBSTART= to begin logging to the Database.
- LOGTYPE=*record number* to tell NetSpy the number to use in identifying its log records. If you do not specify this parameter, the LOGTYPE will default to the number specified on the SMF statement.

NetSpy begins to log data after you specify the required parameters and start NetSpy. You can limit the hours during which data is logged by using the LOGSTART, LOGSTOP, DBSTART, DBSTOP, SMFSTART, and SMFSTOP statements.

---

[2] The LOGTYPE is the record number specified in the LOGTYPE parameter of the INITPRM member See the NetSpy *Administrator Guide*. The *current* LOGTYPE is the setting in use since NetSpy was last initialized.

NetSpy automatically switches from using one log file to the other (for example LOG1 to LOG2) when the file it is currently writing to becomes full. When NetSpy switches files, it first empties the new file; thus, all data in the "new" file is *erased* (data is not overwritten incrementally as new data is accumulated). If LOGDUMP=YES is specified in the INITPRM member, the data in the file to which NetSpy is switching will be archived in the LOGDUMP file before the file is erased. See the section Saving Logged Data for Processing in this chapter for more information.

If NetSpy must be restarted, it will resume writing to the same file and same point where it was terminated.

For more information about the parameters required for the logging function, see the *NetSpy Administrator Guide*.

NCP Interface

Remember that you must activate the NCP interface for NetSpy to write NCP statistics to the log. You can find more information about the NCP parameters in the *NetSpy Administrator Guide*.

Accounting Statistics

Network accounting statistics are logged separately from the other NetSpy data, but to *one* of the log destinations (no multiple destinations). However, network session accounting (NSA) statistics are logged separately from the network gateway accounting (GWA) statistics.

Purging the Database

Important: *If you are logging data to the NetSpy Datacom Database you must run the NSYDCP utility regularly to delete data from the Database before it becomes full. To run the utility, edit and submit the JCL in the NSYDCP member of the NETSPY.CNTL data set.*

It is recommended that you schedule the job to run daily. For example, run the job daily to purge all data that is older than seven days.

Saving Logged Data for Processing

NetSpy's dump file (LOGDUMP) allows you to archive records from the log files for offline processing. NetSpy can dump the records in a dump file before the log file is overwritten. If you want to use a dump file to archive data and you are accumulating data on a daily, weekly, or monthly basis, be aware that NetSpy dumps data *only* when both files (that is, LOG1 and LOG2) are filled and NetSpy switches files. This means that the most current information will not be contained in the dump file because NetSpy dumped the information from the "oldest" file.

You must specify LOGDUMP=YES in the initialization parameters to activate the log dumping feature. The default is LOGDUMP=NO.

Note: Make sure that you allocate sufficient space for your dump file. For more information on allocating the log file and on specifying the logging parameters, see the chapter "Defining Initialization Parameters" *NetSpy Administrator Guide*

Gathering Data in Central Logs

You can gather data from several NetSpys to a central location. With the NetSpy-to-NetSpy communication interface, the central NetSpy uses the COLLECT command and/or parameter to gather logged data from other NetSpys in session with it. This data is stored in central logs: the Log, the Database, or SMF of the central NetSpy. The COLLECT command and parameter allows you to specify which data you want gathered, and to which logs.

The remote NetSpy's NetSpy-to-NetSpy interface sends this data to the central NetSpy at an interval you specify and then merges the data in the central logs.

Reporting from an Alternate Log File

NetSpy offers you the ability to request online reports from files other than your regular log and database files. For example, you may have transferred data from the regular log and database files to another file for which you want to request some reports. NetSpy lets you specify this alternate log file at the Online Reports Menu and on the Network Analysis Parameters Menu. NetSpy issues error messages if it cannot find the alternate log file.

Note: You can *read* from this alternate log member, but you cannot write to it.

Chapter

4 Using the Displays

Once NetSpy is installed and active at your installation, you can log on to it and use the displays. See the *NetSpy Getting Started* guide and the *NetMaster Installation and Setup Instructions Guide* for an explanation of the installation.

Logging on to NetSpy

If you have installed the optional security interface, the logon screen will appear on your terminal (shown below) before the NetSpy Main Menu. You will not see the logon screen if you have not installed the security interface. For an explanation of how to install the security interface, see the *NetSpy Administrator Guide*.

```
                        NN    NN               XXXXXXXXXXXXXXXXX
     UNICENTER         NNN   NN       TT    XXXXXXXXXXXXXXXXXXXXXXXX
      NETWORK         NNNN  NN EEEE TTTTT XXX         XXXXXXXXXXXXXXX
    PERFORMANCE      NN NN NN EE  E TT   XXX    XXXXXXXXXXXXXXXXXXXXXX
       AGENT        NN  NNNN EEEEE TT   XXXXX       XXXX      X  XXX  X
                   NN   NNN EE    TT    XXXXXXXXX    XX  XXX  XX  X  XX
                 NN    NN   EEEE  TTT  XXXXXXXX    XX       XXXX   XXX
                                       XX         XX  XXXXXXXXXX  XXXX
                                        XXXXXXXXXXX  XXXXXXXXXX  XXXX
    COPYRIGHT (C) 1987-2001,             XXXXXXXXXXXXXXXXXXXXX  XXXX
    COMPUTER ASSOCIATES INTERNATIONAL, INC. XXX  6.0.SP00       XXX
                                            XXXXXXXXXXXXXXXXX   TM

                USERID (OR ENTER "LOGOFF") ====>
                PASSWORD ................. ====>
                NEW PASSWORD (OPTIONAL)... ====>


 TO LOGON PLEASE ENTER YOUR USERID AND PASSWORD
```

The logon screen contains these fields:

Field	Description
USERID	Identification code of the user who wants to log on to NetSpy. This user ID must be a valid security system user ID or a user ID defined within NetSpy's internal security table.
PASSWORD	The password associated with the above user ID.
NEW PSWD	A password may be changed when an authorized user performs a valid sign-on. This field is valid only when using an external security system (for example, CA-Top Secret, RACF, or CA-ACF2).

Selecting the Appropriate Option

NetSpy's interactive functions allow you to produce numerous displays and reports using the statistics that NetSpy collects. These statistics describe the current real-time and historical activity of your network.

Various screens, commands, and parameters allow you to obtain specific information from NetSpy. For example, you can specify which applications you want to monitor, and then choose the appropriate screen to display the statistics. You also can use NetSpy to trace transactions on an exception basis and then display the trace data.

You can move through the displays using the menus or you can simply enter commands on the bottom line of any display screen. See the chapter entitled "Using Explicit Commands" for a description.

Available Options

You can produce displays of VTAM, NCP, TCP/IP, plus APPN and MNPS data with NetSpy.

VTAM data includes the following information:

- Application response time and traffic statistics
- Application response time distribution statistics
- Terminal response time and traffic statistics
- Terminal response time distribution statistics
- Terminal response time analysis
- Virtual route statistics
- Tuning statistics
- Buffer statistics

NCP data includes the following information:

- NCP processor and buffer utilization statistics
- Line, cluster, NTRI, X.25, Ethernet, Frame Relay, and TIC3 statistics
- NCP monitoring status
- NCP control block information
- Network accounting status

TCP/IP data includes the following information:

- Terminal response time statistics for Telnet connections to VTAM
- TCP/IP session statistics
- TCP/IP stack data
- UDP session statistics
- Interface performance

APPN and MNPS data includes the following information:

- Global APPN directory services data
- Global APPN topology data
- VTAM data for rapid transit protocol (RTP) dynamic physical units
- Multi-node persistent session (MNPS) data

Main Menu

You select the NetSpy option you want to use from the Main Menu.

```
                          NN    NN                XXXXXXXXXXXXXXXXX
      UNICENTER          NNN   NN       TT    XXXXXXXXXXXXXXXXXXXXXXXX
       NETWORK          NNNN  NN EEEE TTTTT XXX         XXXXXXXXXXXXXXX
     PERFORMANCE       NN NN NN EE  E TT   XXX    XXXXXXXXXXXXXXXXXXXXXXX
        AGENT         NN  NNNN EEEEE TT   XXXXX       XXXX      X  XXX  X
                     NN   NNN EE    TT    XXXXXXXXX    XX  XXX  XX  X  XX
                   NN    NN   EEEE  TTT  XXXXXXXX    XX       XXXX   XXX
                                         XX         XX  XXXXXXXXXX  XXXX
                                          XXXXXXXXXXX  XXXXXXXXXX  XXXX
     COPYRIGHT (C) 1987-2001,              XXXXXXXXXXXXXXXXXXXXX  XXXX
     COMPUTER ASSOCIATES INTERNATIONAL, INC. XXX  6.0.SP00       XXX
                                                XXXXXXXXXXXXXXXXX   TM

   SELECT ====>
   1 - VTAM APPLS/TERMINALS  5 - TRACE FACILITIES    9 - RECOMMENDATIONS
   2 - NCP/NWAYS RESOURCES   6 - VR/BUFFER/TNSTATS  10 - TCP/IP
   3 - OPERATOR COMMANDS     7 - ALERT SYSTEMS      11 - APPN/MNPS
   4 - ONLINE REPORTS        8 - RESOURCE LISTS
F1=HELP    F3=END    F5=APPLS    F6=TERMS    F9=NCPS    F10=LINES
F12=LOGOFF
 OPTIONALLY, ENTER A COMMAND BELOW
---->
```

To display a desired screen, do any of the following:

- Choose an option from those listed on the screen.
- Enter an explicit command along the bottom line of the screen.
- Press a function key.

The Main Menu options are listed below:

1 Displays the VTAM Application and Terminal Statistics Menu
2 Displays the NCP/Nways Statistics Selection Menu
3 Displays the NetSpy Menu of Available Operator Commands
4 Displays the NetSpy Online Report Menu
5 Displays the NetSpy Trace Facilities Menu
6 Displays the NetSpy VR, Buffer and Tuning Statistics Selection Menu
7 Displays the Alert Systems Selection Menu
8 Displays the Resource List Initialization Menu
9 Displays the Network Analysis Parameters Menu
10 Displays the TCP/IP Statistics Selection Menu
11 Displays the APPN/MNPS Selection Menu

Note: You can redisplay the NetSpy Main Menu by entering the MENU command from the command line of any screen.

Using Function Keys With the Displays

All NetSpy Main Menu options except 7 and 9 use the function keys as listed below. For function key descriptions for Alert Systems (option 7) and Recommendations (option 9), see their respective chapters in this manual.

Key	Function
CLEAR	Clears values that you have entered on menu fields.
F1	Displays help information. Refer to Using the Online Help Facility for details.
F2	If a display screen is currently active, F2 activates REFRESH mode to refresh the screen at every base interval (defined by the BASEITVL statement in the INITPRM member). You can see an '*R*' in the upper right corner of the screen when REFRESH mode is on. To deactivate REFRESH mode, press F2 again. The base refresh interval defaults to 30 seconds.
F3	Returns you to the previous menu screen.
F4	Displays all lines whose error count in this interval is higher than zero.
F5	Displays all application statistics. (Issues the DA command.)
F6	Displays all terminal statistics. (Issues the DT command.)
F7	Page back. Valid for multiple-page displays.
F8	Page forward. Valid for multiple-page displays.
F9	Displays statistics for all NCPs/Nways being monitored.
F10	Displays statistics for all lines being monitored.
F11	Displays application response time distribution statistics. (Issues the DAR command.)
F12	Logs you off from your NetSpy operator session.
Enter	Has two functions, depending on the type of display: *For real-time displays,* updates data statistics. *For online reports or trace displays,* pages forward.
PA1	Displays the last command entered on the command line at the bottom of the screen.
PA2	Displays user IDs for terminals in session with TSO and CMS applications on the terminal display (DT) screen. PA2 does not function for virtual sessions or cross-domain applications. On menus, the PA2 key restores the most recently saved user-entered values. **Note:** For PA2 to work, the USRIDUPD parameter must be specified in the INITPRM member.

Specifying Generic Names

Before you begin to use NetSpy, you should understand how NetSpy interprets a *generic name*. You can specify one or more asterisks (*) or a question mark (?) as part of a generic name, as follows:

- One asterisk by itself represents any character combination to fill the field; for example,

  ```
  APPL=*
  ```

  selects all known applications.

- One asterisk at the end of the name represents all remaining characters within the field; for example,

  ```
  APPL=APPL*
  ```

  is the same as APPL?, APPL??, APPL???, and APPL????.

- One asterisk in the middle of the name represents only one character; for example,

  ```
  APPL=APPL*2
  ```

  matches APPL02, APPL12, APPL32, APPL42, and so on.

- One question mark in any position in the name represents only one character; for example,

  ```
  APPL=APPL?
  ```

  matches only APPL, APPL1, APPL2, APPL3, and so on.

Specifying Resource Lists

When requesting a display or entering an explicit command, you can sometimes specify the word RLIST in place of a specific or generic name. RLIST represents the resource list created for a particular type of resource. Resource lists tell NetSpy which resources to include in or exclude from NetSpy displays. These lists can contain either generic resource names or files that in turn contain generic resource names. To create an RLIST file, edit a member of the file pointed to by the //RSCPARM DD statement in the NetSpy PROC. Note that you cannot update these files online through NetSpy; you can only edit them with an editor such as ISPF.

If you specify RLIST and there is no resource list for that particular resource type, NetSpy issues an error message.

When you create a resource list, it is valid only for your user ID and only until you log off of the system. This allows users to have their own set of resource lists.

You can create resource lists in two ways, using either:

- The Resource List Initialization Menu shown in the next section
- The RLIST command

Resource List Initialization Menu

The purpose of the Resource List Initialization menu is to let you create, append to, delete, or display lists.

```
HOST=IPOX
                *** RESOURCE LIST INITIALIZATION MENU ***

  SELECT AN OPTION
  ====> 1

    1 - CREATE A NEW RESOURCE LIST
    2 - APPEND TO CURRENT RESOURCE LIST
    3 - DELETE A RESOURCE LIST
    4 - DISPLAY A RESOURCE LIST

 RESOURCE TYPE (APPL/NCP/LINE/PU/LU/FORAPPL/FORLINE/FORPU/SA/VR/CA):

 ENTER THE FILE OR RESOURCE NAMES BELOW:
          ,          ,          ,          ,          ,          ,

 ARE THE ABOVE NAMES FILE NAMES (Y/N) ? N

 ENTER THE LIST TYPE (INCLUDE/EXCLUDE): INCLUDE


F1=HELP   F3=END   F5=APPLS   F6=TERMS   F9=NCPS   F10=LINES   F12=LOGOFF
 OPTIONALLY, ENTER A COMMAND BELOW
 ---->
```

How to Access

Do one of the following:

- On the NetSpy Main Menu, select option 8, Resource Lists
- At the command line of any NetSpy screen, enter RESOURCE

How to Use

Follow these steps:

1. Enter 1, 2, 3, or 4 to select Create, Append To, Delete, or Display a resource list, respectively.
2. Specify the type of resources to be included, excluded, or displayed:

APPL	Application
NCP	NCP
LINE	Line
PU	Cluster
LU	Secondary Logical Unit (Terminal or Application)
FORAPPL	All LUs in session with the applications you specify
FORLINE	All LUs located on the lines that you specify

FORPU	All LUs located on the PUs that you specify
SA	Subarea
VR	Virtual route
CA	Channel adapter

3. Do one of the following:
   - If you are displaying a resource list, go to step 6
   - If you are creating or appending to a resource list, specify up to seven specific or generic resource names or file names (that contain resource names) that you want to be included or excluded
4. Indicate whether you have specified file names allocated to the NetSpy PROC (with a Y) or resource names (with an N). Valid file names include any member of the OS/390 data set identified through the //RSCPARM DD statement in the batch report JCL. This member must be fixed and blocked, with a logical record length of 80 bytes.

   Note: You are not actually creating any files in this step. You are only identifying file names.
5. Specify whether you want the resources to be included or excluded. Then, press Enter, and you will see the message NSY5000 - RESOURCE LIST PROCESSING COMPLETED.
6. Press Enter and you will see the Resource List Display, described in the next section.

Resource List Display

```
HOST=IPOX                                        28JUN1999.179 MON 16:52:45 ***
           *** NETSPY RESOURCE LIST DISPLAY ***

RESOURCE TYPE: LU          LIST TYPE: INCLUDE

TPXP000   TPXP001   TPXP002   TPXP003   TPXP004   TPXP005   TPXP006
TPXP007   TPXP008   TPXP009   TPXP010   TPXP011   TPXP012   TPXP013
TPXP014   TPXP015   TPXP016   TPXP017   TPXP018   TPXP019   TPXP020
TPXP021   TPXP022   TPXP023   TPXP024   TPXP025   TPXP026   TPXP027
TPXP028   TPXP029   TPXP030   TPXP031   TPXP032   TPXP033   TPXP034
TPXP035   TPXP036   TPXP037   TPXP038   TPXP039


 F1=HELP  F3=END  F5=APPLS  F6=TERMS  F9=NCPS  F10=LINES  F12=LOGOFF
 OPTIONALLY, ENTER A COMMAND BELOW
---->
```

You see a screen such as this sample one after selecting option 4, Display a Resource List, and specifying a resource type on the Resource List Initialization Menu. The fields on this screen are explained below.

Field	Description
RESOURCE TYPE	The type of resources listed on the display.
LIST TYPE	Whether the resource list includes or excludes the displayed resources.

Using the Online Help Facility

The online help facility for NetSpy provides the following types of information:

- How to use each screen
- How to enter the required values on menus
- Descriptions of fields on displays
- Help for commands
- Help on using the help facility

Field-level and Screen-level Help

To receive field-level help, place the cursor on an input field (on menus) or on a column or field heading (on displays) and press **F1**.

To receive screen-level ("extended") help, place the cursor on the command line or any area of the screen other than an input field, or column or field heading, and press F1.

Once you are in screen-level help, you can press the F8 key to scroll forward through field-level descriptions (if there are any) for that screen.

Help for Commands

You can receive help on NetSpy's explicit commands in the following two ways. From the command line of any screen:

- Type HELP *commandname*
- Type HELP COMMAND or HELP COMMANDS. This takes you to an index of NetSpy commands from which you can enter HELP *commandname* from the command line.

Help for Using Help

To receive help on using the help facility, type HELP HELP from the command line of any NetSpy screen. If you are in the help facility, press F1 or type HELP.

For More Information

The following chapters in this manual describe NetSpy's online displays in detail:

- "Using Explicit Commands"
- "Displaying Real-time Data"
- "Displaying Historical Data"
- "Using the Trace Facilities"
- "Using Alerts"
- "Using Network Accounting"
- "Using Modeling and Recommendations"

For a complete list of display headings and explanations, see the appendix entitled "Report and Display Headings."

Chapter 5

Using Explicit Commands

Issuing the Commands

You can enter explicit commands at the bottom of NetSpy screens instead of using the menus to move through the displays. To recall the last explicit command you issued from any NetSpy screen, press the PA1 key.

Privileged Users

A *privileged* NetSpy user can execute any NetSpy command. Other users can execute only the commands to display data and produce reports. Privileged users are defined by your installation in the security interface. If your installation does not use the security interface, then all NetSpy users are privileged.

Generic Names

Before you begin using NetSpy, you should understand how NetSpy interprets a *generic name*. You can specify one or more asterisks (*) or a question mark (?) as part of a generic name. For details, see **Specifying Generic Names** in the chapter "Using the Displays."

Notation Conventions

This chapter uses the following notation when describing the syntax of commands.

UPPER-CASE	All capital letters indicated that you must enter the keyword exactly as shown.
italics	Italics indicate a variable. You must supply a value for each variable.
[ ]	Brackets indicate the keyword is optional.
{ }	Braces indicate mutually exclusive required operands. You must choose one. **Note:** For threshold definitions in MONITOR statements, you may choose more than one.
|	A vertical bar means you must choose between mutually exclusive values.

Summary of Commands

Command	Command Function	Can Command Use Data from Other NetSpys in Displays/Reports?
ACQUIRE (privileged)	Establishes the session between NetSpy and an NCP	No
ALERT	Displays the Alerts System Selection Menu	No
ANALYZE	Displays network analysis parameters	No
APPNMENU	Displays NetSpy APPN/MNPS Selection Menu	No
BUFFMENU	Displays NetSpy Buffer Statistics Selection Menu	No
COLLECT (privileged)	Allows one central NetSpy to collect VTAM and NCP data from other NetSpys into its own log	No
CONNECT (privileged)	Establishes a NetSpy-to-NetSpy session with another NetSpy	No
DA	Displays application traffic and response time statistics	Yes
DALRT	Displays trace alert statistics	No
DAR	Displays application response time distribution statistics	Yes
DBUFRUSE	Displays NetSpy VTAM Fixed Buffer Statistics screen	No

Command	Command Function	Can Command Use Data from Other NetSpys in Displays/Reports?
DCRPLUSE	Displays NetSpy CRPL Allocation by APPL screen	No
DDIRS	Displays the Global APPN Directory Services Data screen	No
DEFINE (privileged)	Reads the NCP source and builds an internal representation of the NCP	No
DEFMON	Displays the Monitor Definition Main Menu	No
DELETE (privileged)	Breaks the session between NetSpy and an NCP and/or deletes a major node definition	No
DELMON	Displays the Monitor Deletion Main Menu	No
DGALERT (privileged)	Displays the Global Alerts Display	Yes
DIF	Displays the Interface Table Summary Display	
DIFD	Displays the Interface Table Detail Display	
DIOBFUSE	Displays NetSpy I/O Buffer Allocation by APPL screen	No
DISCONN (privileged)	Terminates a NetSpy-to-NetSpy session with another NetSpy	No
DISMON	Displays the Monitor Status Display	Yes
DMNPS	Displays MNPS data	No
DN	Displays NCP traffic and error statistics	Yes
DNCB	Displays NCP control block statistics	No
DNCBM	Displays NCP Control Block Statistics Selection Criteria menu	No
DNETH	Displays the Ethernet Network Statistics screen	Yes
DNETHM	Displays the Ethernet Statistics Selection Criteria menu	No
DNFR	Displays the Frame Relay Network Statistics screen	Yes
DNFRM	Displays the Frame Relay Statistics Selection Criteria menu	No
DNLIST	Displays all NCPs defined to NetSpy	Yes
DNS	Displays Node monitoring status	Yes
DNSA	Displays network accounting status	No
DNTIC3	Displays statistics for NCP TIC3 resources	Yes
DNTIC3M	Displays the TIC3 Resource Statistics Selection Criteria	No

Command	Command Function	Can Command Use Data from Other NetSpys in Displays/Reports?
	menu	
DNTR	Displays statistics on NTRI logical and physical links (LLINKs and PLINKs)	Yes
DNX25	Displays X.25 statistics for MCH lines, MCH PUs, LUs, and virtual circuits (VCs).	Yes
DNX25M	Displays X.25 Statistics Selection Criteria menu.	No
DRTP	Displays VTAM RTP data	No
DT	Displays terminal traffic and response time statistics	Yes
DTA	Displays terminal response time analysis statistics	Yes
DTCPC	Displays TCP/IP summary statistics	No
DTCPCD	Displays TCP/IP detailed statistics	No
DTCPS	Displays TCP/IP stack data	No
DTCPV	Displays VTAM TCP/IP summary statistics	No
DTNSTATS	Displays VTAM I/O tuning statistics on the NetSpy TNSTATS Display	No
DTOPO	Displays global APPN topology data	No
DTR	Displays terminal response time distribution statistics	Yes
DTSMENU	Displays the NetSpy TNSTATS Selection Menu	No
DUALERT	Displays the User Alerts Display	Yes
DUDPC	Displays the User Datagram Protocol (UDP) Connection Summary Display	Yes
DUDPD	Displays the UDP Connection Detail Display	Yes
DV	Displays network delays for virtual routes and subareas	Yes
FORCEDR (privileged)	Forces a definite response from specified applications	No
GALRT	Displays the General Alert System Selection Menu	No
GALWARN (privileged)	Activates or inactivates the general alert warning feature	No
GRAPH	Displays online graphic statistics	Yes
HELP	Displays help information	No

Command	Command Function	Can Command Use Data from Other NetSpys in Displays/Reports?
HOSTIPA	Displays the TCP/IP Host Management Menu where you can add a stack.	Yes
HOSTIPC	Displays the TCP/IP Host Management Menu where you can change a stack.	Yes
HOSTIPD	Displays the TCP/IP Host Management Menu where you can delete a stack.	No
LOGOFF	Terminates a user session with NetSpy	No
MENU	Displays the NetSpy Main Menu	No
MVS Modify	The MVS Modify command interface allows NetSpy commands to be issued from the OS/390 system console.	No
NCPRETRY	Tells NetSpy how many times it should try to acquire an NCP's NPALU session either after the session has been lost or an attempt to acquire it has failed.	No
NDSP	Displays the NCP Statistics Selection Criteria Menu	No
NETSPY	Determines which NetSpy's data will be included on displays generated through commands that support multiple NetSpys	No
NTNOPER (privileged)	Displays the NetSpy-to-NetSpy Operator screen, where you can start or stop NetSpy-to-NetSpy sessions and check the status of NetSpy-to-NetSpy communication	No
OPER (privileged)	Displays the Operator Command Menu	No
PNSA (privileged)	Stops network accounting for the specified NCP	No
PRINT	Displays online summary records	Yes
PSMF (privileged)	Stops collecting traffic and error statistics for the resources you specify	No
PTASK (privileged)	Stops and disables the specified subtask	Yes
REPORT	Displays the Online Report Menu	No
RESOURCE	Displays the Resource List Initialization Menu	No
RLIST	Creates a default resource list for a particular type of resource. When NetSpy generates graphic and trace alert displays, it includes data only on the resources in this list.	No
SETMODE	Sets the mode (summary, delta, or interval) for displaying VTAM, NCP, and VR statistics	No

Command	Command Function	Can Command Use Data from Other NetSpys in Displays/Reports?
SHUTDOWN (privileged)	Terminates NetSpy	No
SNSA (privileged)	Displays the Start Network Accounting screen	No
SSMF (privileged)	Starts collecting traffic and error statistics for the resources you specify	No
STASK (privileged)	Starts and enables the specified subtask	Yes
STAT	Displays the Online Tuning Statistics screen	Yes
SUMMARY	Displays online summary statistics for the NetSpy network	Yes
SWITCH	Changes the active audit log to inactive status and changes the inactive log active.	Yes
TCPIP	Displays the TCP/IP Primary Menu	No
TCPIPC	Displays the TCP/IP Display Menu	Yes
TCPIPH	Displays the TCP/IP Host Management Menu	Yes
TRACE (privileged)	Displays the Trace Facilities Menu	No
TRACED (privileged)	Displays the Trace Display Parameters Screen	No
TRACEO (privileged)	Displays the Trace Facilities Operator Commands Menu	No
TRACES (privileged)	Displays the Trace Status Menu	No
TRCD (privileged)	Displays trace record displays	No
VDSP	Displays the VTAM Application and Terminal Statistics Menu	No
$PNETSPY (privileged)	Terminates NetSpy	No

ACQUIRE Command (Privileged)

The ACQUIRE command establishes the session between NetSpy and an NCP NPALU. All outstanding requests for collection will be honored as soon as the session is established.

Format

```
ACQUIRE nodename
```

Operands

The ACQUIRE command has the following operand:

Operand	Explanation
nodename	Specifies the name of the NCP major node you want to acquire. This *nodename* must have been defined previously.

Usage

If the ACQUIRE fails, NetSpy will continue to attempt to acquire the NCP based on the values coded for the following:

- The RETRY keyword on the DEFINE statement for the NCP
- Global defaults from the NCPRETRY command
- Global defaults from the NCPRETRY statement (in INITPRM)

Example

To acquire NCP002, enter:

```
ACQUIRE NCP002
```

ALERT Command

The ALERT command displays the Alert Systems Selection Menu.

Format

```
ALERT
```

ANALYZE Command

The ANALYZE command displays the Network Analysis Parameters Menu.

Format

```
ANALYZE
```

APPNMENU Command

The APPNMENU command displays the APPN/MNPS Selection Menu.

Format

```
APPNMENU
```

BUFFMENU Command

The BUFFMENU command displays the NetSpy Buffer Statistics Selection Menu.

Format

```
BUFFMENU
```

COLLECT Command

The COLLECT command is a NetSpy-to-NetSpy command that allows one or more NetSpys to collect VTAM and NCP data from other NetSpys in a central log. This command allows you to specify:

- Type of data to collect (application, terminal, NCP nodes, virtual routes)
- Collection interval
- Where data is to be logged (Log, Database, and/or SMF)
- Collection start and stop times
- Remote NetSpy names

Note: NetSpy cannot collect data from NetMaster; however NetMaster can collect data from NetSpy. See the NetMaster *documentation* for the required parameters.

Format

```
COLLECT {resource_type=name} [SCOPE=resource] [ITVL=mm]
        NETSPY=netspyacbx [LOG=destination] [STARTT=hh:mm:ss]
        [STOPT=hh:mm:ss]
```

Operands

The COLLECT command has the following operands:

Operand	Explanation
resource_type=name	*Collects the names resource. Resource_type* can be any of the following. NetSpy produces a specific record type for each resource: APPL=name — Type A application records

Operand	Explanation
	LU=name — Type T and U records NODE=name — Type N records VR — Type V records *Name* refers to the generic or specific name of the resource. You can specify an asterisk (*) to select all known resources of the type you specified that meet the selection criteria.
ITVL=*mm*	Specifies a collection interval in minutes. The value must be a multiple of the base interval in the remote NetSpy. The default is the interval time specified in the remote NetSpy. See the *NetSpy Administrator Guide*.
SCOPE=*resource*	SCOPE, which is ***valid only if the NODE resource type is specified***, limits data collection to the specified resource. Choose one of the following values: LINES — Lines. *This is the default.* PUS — Control units LUS — Terminals NCPS — NCPs ONLY — The resource matching the node name ALLLINES — All lines ALLPUS — All control units ALLLUS — All terminals X25LINES — X.25 multichannel (MCH) lines X25PUS — X.25 MCH PUs X25LUS — X.25 LUs X25VCS — X.25 virtual circuits X25STATS — All X.25 MCH lines, MCH PUs, and VCs X25ALL — All X.25 resources NTRIS — All token ring (TIC) resources (both physical and logical links) LLINKS — Logical links on a token ring PLINKS — Physical links on a token ring ETHPLINK — Ethernet physical links

Operand	Explanation	
	ETHALL	All Ethernet resources
	FRPLINK	Frame Relay physical links
	FRLLINK	Frame Relay logical links
	FRPU	Frame Relay physical units. These resources include LMI stations and FRSE under the physical link.
	FRALL	All Frame Relay resources
	TIC3LINK	TIC3 physical link resources
	TIC3PU	TIC3 logical PU resources
	TIC3ALL	All TIC3 resources
NETSPY=*netspyacbx*	Indicates the specific *netspyacbx* specified in INITPRM for the remote NetSpys.	
LOG=*destination*	Indicates where NetSpy should log the data:	
	LOG	Log only. This is the default.
	DB	Database only
	SMF	SMF and the Log
	(SMF)	SMF only
	You can specify more than one destination using parentheses and commas. For example, LOG=(LOG,SMF,DB) logs data to all three destinations. If you want to specify SMF as the *only* destination, use parentheses, like this: LOG=(SMF).	
STARTT=*hh:mm:ss*	Indicates time when you want data collection to start, relative to the local NetSpy. Specify this time as *hh:mm* or *hh:mm:ss*. NetSpy converts this time to the remote NetSpy time. If you do not specify a start time or a stop time, this parameter defaults to the current time. If you have already specified a stop time but not a start time, NetSpy resets or updates the stop time.	
STOPT=*hh:mm:ss*	Indicates time when you want data collection to stop, relative to the local NetSpy. Specify this time as *hh:mm* or *hh:mm:ss*. NetSpy converts this time to the remote NetSpy time. This parameter has no default. A STOPT specified without a STARTT will only update a stop time; it will not start a collection.	

Usage

To enable this command, you must:

- Specify the NSYXNAME parameter in INITPRM for the NetSpys indicated on this command.
- Specify the CONNECT command online or the CONNECT statement in STARTPRM to establish a session between the NetSpys.

Once you have issued a COLLECT command for a resource and collection criteria, you can reissue the command with only a stop time and not a start time for the purpose of changing the current stop time. The collection criteria (APPL, LU, VR, NODE) and resource name must match those on the initial COLLECT command. For example, if the command starting collection is COLLECT APPL=*, the command to stop collection must read COLLECT APPL=*.

To get the most flexibility, specify a COLLECT command for each resource type or major resource and for each NetSpy, and include a start time and stop time for each command.

The worst network and worst host response times reported in NetSpy-to-NetSpy collection statistics are from the remote NetSpy interval. If you want the response times to be synchronized between the collection interval on the command and the interval in the remote NetSpy, specify the collection interval to be the same as the interval in the remote NetSpy.

The NetSpy receiving the log data must conform to the rules for logging data. See the *NetSpy Administrator Guide* and the chapter "**Logging Data**" in this manual. The remote NetSpy does not need to be logging the data. If you want, however, you can have both the remote and the local NetSpy log data.

If a NetSpy-to-NetSpy session goes down when the local NetSpy is receiving data from the remote NetSpy, the remote NetSpy continues to collect data until the collection interval specified on the COLLECT command expires. When the session is reestablished, the local NetSpy automatically reissues the COLLECT command if the stop time has not expired. If the NetSpys reestablished the session before the collection interval expired, the remote NetSpy ignores the reissued COLLECT command, and collection proceeds as normal. If collection stopped, NetSpy restarts it, providing the stop time has not expired.

Example

The following command starts collection of data associated with the application XYZPROD. The local NetSpy collects data every 15 minutes from the remote NetSpy known as NETSPYZZ. Collection begins at 12:00 noon and ends at 12:00 midnight, with the data being written to the NetSpy Log and SMF.

```
COLLECT APPL=XYZ ITVL=15 LOG=(LOG,SMF) NETSPY=NETSPYZZ STARTT=12:00:00
STOPT=24:00:00
```

CONNECT Command

The CONNECT command establishes a NetSpy-to-NetSpy session with another NetSpy.

Format

```
CONNECT netspyacbx
```

Operands

The CONNECT command has the following operand:

Operand	Explanation
netspyacbx	The name specified on the NSYXNAME parameter in the INITPRM of the NetSpy you want to be in session with your copy of NetSpy.

Usage

You issue this command from the NetSpy-to-NetSpy Status Screen or from the command line of any NetSpy screen.

This command executes only when you have specified the NSYXNAME parameter in INITPRM, as explained in the *NetSpy Administrator Guide*.

For NetSpy to Netspy communication, only one side of the NetSpy to NetSpy communication needs to code this statement. You should code this statement in the initialization parameters of the NetSpy into which you want to collect or receive remote NetSpy data. The NetSpy with this statement coded becomes a SLU. The NetSpy associated with the ACB name, “netspyacbx” coded in this statement becomes the PLU.

Note: For NetMaster to NetSpy communication, NetSpy can only be a PLU. In other words, do not code this statement using an acbname associated with a NetMaster address space. NetSpy cannot initiate a connection with a NetMaster ACB. However, NetMaster can request a session with a NetSpy using the ACB name, netspyacbx coded on the NSYXNAME parameter. See the required NetMaster parameters.

Example

The following command, entered from NETSPYXX, establishes a session between NETSPYXX and NETSPYZZ.

```
CONNECT NETSPYZZ
```

DA Command

The DA command displays the Application Traffic and Response Time screen.

Format

```
DA mode lu62_option [NETSPY=nsyxname]
```

Operands

The DA command has the following operands:

Operand	Explanation	
mode	Specifies the display mode, which displays data collected:	
	INTERVAL	From the beginning of an interval. This mode is the *default*. If you do not specify the mode, NetSpy displays the statistics in interval mode.
	SUMMARY	From the start of your request.
	DELTA	Since the last time you pressed Enter. In a NetSpy-to-NetSpy command for a remote application, the worst network and host response times reported are from the remote NetSpy's interval.
lu62_option	Specifies whether or not to display LU 6.2 information in the display. These values are mutually exclusive:	
	EXCLU62	Excludes LU 6.2 information
	ONLYLU62	Includes LU 6.2 information
NETSPY=*nsyxname*	Displays statistics from the NetSpy identified by *nsyxname* in its INITPRM that matches the specific or generic *nsyxname* specified on this command.	
	Specify an asterisk (*) (instead of *nsyxname*) to display statistics from all NetSpys having *nsyxname* specified.	

Usage

A NetSpy-to-NetSpy connection must exist for one NetSpy to gather and display statistics from multiple NetSpys. You must specify the NSYXNAME parameter in INITPRM for each NetSpy involved in this communication. Also, you must specify the CONNECT statement in STARTPRM or issue the CONNECT command from a NetSpy screen to establish the session.

The NETSPY operand on the DA command overrides the global NETSPY command for the requested display.

The INTERVAL, SUMMARY, or DELTA operand on the DA command overrides the global SETMODE command.

Example

The following command tells NetSpy to display application traffic and response time statistics in summary mode from the remote NetSpy "NETSPYZZ" (NetSpy-to-NetSpy session).

```
DA SUMMARY NETSPY=NETSPYZZ
```

DALRT Command

The DALRT command displays the Trace Alert System display.

Format

```
DALRT
```

DAR Command

The DAR command displays the Application Response Time Distribution screen. Optional operands allow for selection of display mode and NetSpy-to-NetSpy session data.

Format

```
DAR mode [lu62_option] [NETSPY=nsyxname]
```

Operands

The DAR command has the following operands

Operand	Explanation
mode	Specifies the display mode, which displays data collected. You can specify INTERVAL, SUMMARY, or DELTA (which are explained under the DA Command).
lu62_option	Specifies whether or not to display LU 6.2 information in the display. Choose one: EXCLU62 Excludes LU 6.2 information ONLYLU62 Includes LU 6.2 information
NETSPY=*nsyxname*	Displays statistics from the NetSpy identified by *nsyxname* in its INITPRM that matches the specific or generic *nsyxname* specified on this command. Specify an asterisk (*) (instead of *nsyxname*) to display statistics from all NetSpys having *nsyxname* specified.

Usage

A NetSpy-to-NetSpy connection must exist for one NetSpy to gather and display statistics from multiple NetSpys. You must specify the NSYXNAME parameter in INITPRM for each NetSpy involved in this communication. Also, you must specify the CONNECT parameter in STARTPRM or issue the CONNECT command from a NetSpy screen to establish the session.

The NETSPY operand on the DAR command overrides the global NETSPY command for the requested display. The INTERVAL, SUMMARY, or DELTA operand on the DAR command overrides the global SETMODE command.

Example

The following command tells NetSpy to display application response time distribution statistics in interval mode from the remote NetSpy "NETSPYZZ" (NetSpy-to-NetSpy session).

```
DAR NETSPY=NETSPYZZ
```

DBUFRUSE Command

The DBUFRUSE command displays the NetSpy VTAM Fixed Buffer Statistics screen.

Format

```
DBUFRUSE
```

DCRPLUSE Command

The DCRPLUSE command displays the NetSpy CRPL Allocation by APPL screen.

Format

```
DCRPLUSE name
```

Operands

The DCRPLUSE command has the following operand:

Operand	Explanation
name	Specifies an application name, mask, or RLIST. Use an asterisk (*) to specify all CRPLs.

DDIRS Command

The DDIRS command displays the Global APPN Directory Services Data screen.

Format

```
DDIRS
```

DEFINE Command

The DEFINE command reads the NCP source and builds an internal representation of the NCP. If MON=YES, NetSpy will establish a session with the NPALU. You also can define local clusters, local SNA, and switched nodes with this command.

Format

```
DEFINE nodename [MON=option] [NPALU=npaluname]
```

Operands

The DEFINE command has the following operands:

Operand	Explanation
nodename	Specifies the name of the NCP, local clusters, local SNA nodes, or switched nodes.
MON=*option*	Specifies whether to acquire the NPALU session. Specify one of the following: YES — Acquires the NPALU session with the first NPALU in the NCP. This is the *default* for the DEFINE command for *NCP major nodes*. MON=YES has no effect on *non-NCP major node types.* NO — Does not acquire the NPALU session. Other non-NCP major node types are not monitored. The configuration data base is built, but no session is established with the NPALU.
NPALU=*npaluname*	Specifies the NCP NPALU with which you want to be in session. You can start multiple NetSpy sessions, in different hosts, with one NCP provided each session involves a different NPALU and that you start the NetSpy that will be in session with the first NPALU defined in the NCP as the last NetSpy started.

Usage

The option MON=YES merely establishes a session between NetSpy and the NPALU. To start collecting NPA data, you must specify the SSMF statement in the NCP startup parameters (STARTPRM).

Example

To define NCP002 to NetSpy, enter:

```
DEFINE NCP002
```

DEFMON Command

The DEFMON command displays the Monitor Definition Main Menu.

Format

```
DEFMON
```

DELETE Command

The DELETE command ends the session between NetSpy and an NCP and/or deletes a major node definition. For all major nodes, all control blocks associated with the node will be released, and Netspy will not recognize any commands addressed to this major node.

Format

DELETE *nodename*

Operands

The DELETE command has the following operand:

Operand	Explanation
nodename	Specifies the name of the NCP major node you want to delete. This *nodename* must have been defined previously.

Usage

After entering the DELETE command, you can enter a new DEFINE command to read the latest major node source.

Example

To delete NCP002, enter:

```
DELETE NCP002
```

DELMON Command

The DELMON command displays the Monitor Deletion Main Menu.

Format

```
DELMON
```

DGALERT Command

The DGALERT command displays the Global Alerts Display.

Format

```
DGALERT
```

DIF Command

The DIF command displays the NetSpy Interface Summary screen.

Format

```
DIF [ADDRESS=number | NAME=name]
```

Operand	Explanation
ADDRESS=*number*	TCP/IP host address.
NAME=*name*	TCP/IP host name.

Note: Names are not resolved during command processing. NetSpy matches the name provided in the command with one provided in the stack definition. If the stack was not defined by name, no match will occur.

DIFD Command

The DIFD command displays the NetSpy Interface Detail screen.

Format

```
DIFD [ADDRESS=number | NAME=name]
```

Operand	Explanation
ADDRESS=*number*	TCP/IP host address.
NAME=*name*	TCP/IP host name.

Note: Names are not resolved during command processing. NetSpy matches the name provided in the command with one provided in the stack definition. If the stack was not defined by name, no match will occur.

DIOBFUSE Command

The DIOBFUSE command displays the NetSpy I/O Buffer Allocation by APPL screen.

Format

```
DIOBFUSE name
```

Operands

The DIOBFUSE command has the following operand:

Operand	Explanation
name	Specifies an application name, mask, or RLIST. Use an asterisk (*) to specify all CRPLs.

DISCONN Command

The DISCONN command terminates a NetSpy-to-NetSpy session.

Format

```
DISCONN nsyxname
```

Operands

The DISCONN command has the following operand:

Operand	Explanation
nsyxname	Specifies the name on the NSYXNAME parameter in the INITPRM of the NetSpy with which you want to terminate a session.

Usage

You enter this command from the NetSpy-to-NetSpy Status Screen or from the command line of any screen.

This command executes only when you have specified the NSYXNAME parameter in INITPRM. See the *NetSpy Administrator Guide* for more information on this parameter.

Example

The following command, entered from NETSPYXX, terminates a session between NETSPYXX and NETSPYZZ:

```
DISCONN NETSPYZZ
```

DISMON Command

The DISMON command displays the Monitor Status Display.

Format

```
DISMON
```

DMNPS Command

The DMNPS command displays the MNPS data screen.

Format

```
DMNPS
```

DN Command

The DN command displays the NCP Statistics screens. Optional operands allow for a specific NCP resource name, specific scope, interval mode selection, conditional NPA data constraints, selection of NetSpy-to-NetSpy session data, and displaying transmission priority statistics. The DN command allows you to display NCP resources without writing information to SMF or log files.

Format

```
DN [nodename] [SCOPE=resource] [threshold] [mode] [NETSPY=nsyxname] [TP]
```

Operands

The DN command has the following operands:

Operand	Explanation
nodename	Specifies the NCP resource (NCP, line, cluster, or terminal) for which you want statistics displayed. If omitted, all resources in all NCPs will be considered for display.
SCOPE=*resource*	SCOPE limits the display to the specified resource. Choose one of the following values: LINES — Lines PUS — Control units LUS — Terminals NCPS — NCPs This is the default. ALL — All resources subordinate to the node name ONLY — The resource matching the node name.

Operand	Explanation
threshold	Displays statistics that meet the following threshold criteria. Choose one: UTL>*n* — Lines with utilization greater than *n* ERRS>*n* — Clusters or lines with an error count greater than *n* MSGSM>*n* — Resources with a traffic rate (messages per minute) greater than *n* OQLEN>*n* — Resources with an outbound queue length > *n*
mode	Specifies the display mode: INTERVAL, SUMMARY, or DELTA (which are explained under the DA Command). The *default* is INTERVAL. If you do not specify the mode, NetSpy displays the statistics in interval mode.
NETSPY=*nsyxname*	Displays statistics from the NetSpy identified by *nsyxname* in its INITPRM that matches the specific or generic *nsyxname* specified on this command. Specify an asterisk (*) (instead of *nsyxname*) to display statistics from all NetSpys having *nsyxname* specified.
TP	Displays statistics by transmission priority. **Note:** TP is not valid with the NETSPY= operand.

Usage

You can use the SCOPE operand to display all resources under the node name. For example, DN LINE01 SCOPE=PUS displays NCP traffic and error statistics for LINE01 and all controllers on line LINE01.

A NetSpy-to-NetSpy connection must exist for one NetSpy to display statistics from multiple NetSpys. You must specify the NSYXNAME parameter in the INITPRM of each NetSpy involved in this communication. Also, you must specify the CONNECT statement in STARTPRM or issue the CONNECT command from a NetSpy screen to establish the communication.

The NETSPY operand on the DN command overrides the global NETSPY command for the requested display.

The INTERVAL, SUMMARY, or DELTA operand on the DN command overrides the global SETMODE command.

Example

To display current NCP traffic and error statistics in delta mode for all PUs that NetSpy is currently collecting on, and to include data from all NetSpys matching the generic *nsyxname*, enter:

```
DN DELTA NETSPY=* SCOPE=PUS
```

DNCB Command

The DNCB command displays control block statistics for NCPs that support control block monitoring.

Format

```
DNCB [nodename] [threshold]
```

Operands

The DNCB command has the following operands:

Operand	Explanation	
nodename	Specifies the name of an NCP major node for which you want statistics displayed. If omitted, all NCPs will be considered for display.	
threshold	Displays only control block pools that meet the following threshold criteria. Choose one:	
	FREEBUF>*n*	Have more than *n* percent of its buffers free.
	INUSEBUF>*n*	Have more than *n* percent of its buffers currently in use.
	MAXBUF>*n*	Whose maximum percentage of buffers in use is greater than *n*.
	SUMMAX>*n*	Have ever had more than *n* percent of its buffers in use since the NCP was loaded.
	DYNBUF>*n*	That are using more than *n* dynamic buffers. Dynamic buffers are taken from the NCP buffer pool and can affect NCP performance.

Example

To display control block statistics for NCP5, enter:

```
DNCB NCP5
```

DNETH Command

The DNETH command displays the NCP Ethernet Network Statistics screen. Optional operands allow for specific NCP resource and scope selection, and selection of NetSpy-to-NetSpy session data.

Note: You can display a selection menu by entering the DNETHM command.

Format

```
DNETH [nodename] [SCOPE=resource] [threshold] [mode]
      [NETSPY=nsyxname]
```

Operands

The DNETH command has the following operands:

Operand	Explanation
nodename	Specifies the node resource (NCP, local cluster, local SNA node, SWNET node, line, cluster, or terminal) for which you want the NCP Ethernet resource statistics displayed. You may specify * for all nodes, or specify a generic node name. If omitted, all node resources will be considered for display.
SCOPE=*resource*	Displays the following Ethernet data. Choose one:
	ETHPLINK — All physical link resources. This is the *default*.
	ETHALL — All resources
	ALL — All resources
	ONLY — The resource matching the node name
threshold	Displays only data on Ethernet resources that meets the following threshold criteria. Choose one:
	DFRMS>*n* — Discard more than *n* I-frames during the interval
	IFRMM>*n* — Transfer more than *n* I-frames per minute
	BYTES>*n* — Send/receive more than *n* bytes per second
	CNGCNT>*n* — Have a congestion count greater than *n*
	TDEF>*n* — Have more than *n* transmissions deferred
	OQLEN>*n* — Have an outbound queue length greater than *n*
	ONECOLL>*n* — Have more than *n* single collisions
	MULTCOLL>*n* — Have more than *n* multiple collisions
mode	Specifies the display mode, which displays data collected. You can specify INTERVAL, SUMMARY, or DELTA (which are explained under the DA Command).
NETSPY=*nsyxname*	Displays statistics from the NetSpy identified by *nsyxname* in its INITPRM that matches the specific or generic *nsyxname* specified on this command. Specify an asterisk (*) (instead of *nsyxname*) to display statistics from all NetSpys having *nsyxname* specified.

Example

To display Ethernet statistics for all Ethernet physical link resources on all nodes, enter the following command:

```
DNETH * SCOPE=ETHPLINK
```

DNFR Command

The DNFR command displays the Frame Relay Network Statistics screen. Optional operands allow for specific NCP resource and scope selection, and selection of NetSpy-to-NetSpy session data.

Note: You can display a selection menu by entering the DNFRM command.

Format

```
DNFR [nodename] [SCOPE=resource] [threshold] [mode] [NETSPY=nsyxname]
```

Operands

The DNFR command has the following operands:

Operand	Explanation	
nodename	Specifies the node resource (NCP, local cluster, local SNA node, SWNET node, line, cluster, or terminal) for which you want the NCP Frame Relay resource statistics displayed. You may specify * for all nodes, or specify a generic node name. If omitted, all node resources will be considered for display.	
SCOPE=*resource*	Displays the following Frame Relay data. Choose one:	
	FRPLINK	Physical link resources. This is the *default*.
	FRLLINK	Logical link resources
	FRPU	Physical unit resources. These include LMI stations and FRSE under the physical link.
	FRALL	All resources
	ALL	All resources
	ONLY	The resource matching the node name
threshold	Displays only data on Frame Relay resources that meets the following threshold criteria. Choose one:	
	DFRMS>n	Discard more than *n* frames
	IFRMM>*n*	Transfer more than *n* I-frames per minute
	RIFRMS>*n*	Retransmit more than *n* I-frames
	BYTES>*n*	Send/receive more than *n* bytes per second

Operand	Explanation	
	RBYTES>*n*	Retransmit more than *n* bytes
	OQLEN>*n*	Have an outbound queue length greater than *n*
	CONFWD>*n*	Have forward congestion greater than *n*
	CONBCK>*n*	Have backward congestion greater than *n*
	UTL>*n*	Have a utilization percentage greater than *n*
mode	Specifies the display mode, which displays data collected. You can specify INTERVAL, SUMMARY, or DELTA (which are explained under the DA Command).	
NETSPY=*nsyxname*	Displays statistics from the NetSpy identified by *nsyxname* in its INITPRM that matches the specific or generic *nsyxname* specified on this command. Specify an asterisk (*) (instead of *nsyxname*) to display statistics from all NetSpys having *nsyxname* specified.	

Example

To display Frame Relay statistics for Frame Relay physical link resources for all nodes, enter the following command:

```
DNFR * SCOPE=FRPLINK
```

DNLIST Command

The DNLIST command displays a list of all NCPs defined to NetSpy, including information such as version and generation date and time.

Format

```
DNLIST [NETSPY=nsyxname]
```

Operands

The DNLIST command has the following operands:

Operand	Explanation
NETSPY=*nsyxname*	Displays statistics from the NetSpy identified by *nsyxname* in its INITPRM that matches the specific or generic *nsyxname* specified on this command. Specify an asterisk (*) (instead of *nsyxname*) to display statistics from all NetSpys having *nsyxname* specified.

DNS Command

The DNS command displays the NCP Node Monitoring Status screen. Optional operands allow for specific NCP resource selection, scope selection, and selection of NetSpy-to-NetSpy session data.

Format

```
DNS [nodename] [SCOPE=resource] [NETSPY=nsyxname]
```

Operands

The DNS command has the following operands:

Operand	Explanation
nodename	Specifies the node resource (NCP, local cluster, local SNA node, SWNET node, line, cluster, or terminal) for which you want the monitoring status displayed. If omitted, all resources will be considered for display.
SCOPE=resource	Limits the display to showing the node monitoring status of the following resource. Choose one:

ONLY	The resource matching the node name.
LINES	Lines other than X.25, NTRI, Ethernet, Frame Relay, and TIC3
NCPS	NCPs This is the *default*.
PUS	Control units other than X.25, NTRI, Ethernet, Frame Relay, and TIC3
LUS	Terminals other than X.25
ALL	All resources
ALLLINES	All lines
ALLPUS	All control units
ALLLUS	All terminals
X25LINES	X.25 multichannel (MCH) lines
X25PUS	X.25 MCH PUs
X25LUS	X.25 LUs
X25VCS	X.25 VCs
X25STATS	X.25 MCH lines, MCH PUs, and virtual circuits (VCs)
X25ALL	All X.25 resources

Operand	Explanation	
	NTRIS	Token ring (TIC) resources (both physical and logical links)
	LLINKS	Logical links on a token ring (TIC)
	PLINKS	Physical links on a token ring (TIC).
	ETHPLINK	Ethernet physical link resources
	ETHALL	All Ethernet resources
	FRPLINK	Frame Relay physical link resources
	FRLLINK	Frame Relay logical link resources
	FRPU	Frame Relay physical unit resources. These include LMI stations and FRSE under the physical link.
	FRALL	All Frame Relay resources
	TIC3LINK	TIC3 physical link resources
	TIC3PU	TIC3 logical PU resources
	TIC3ALL	All TIC3 resources
NETSPY=*nsyxname*	Displays the monitoring status of the NetSpy identified by *nsyxname* in its INITPRM that matches the specific or generic *nsyxname* specified on this command. Specify an asterisk (*) (instead of *nsyxname*) to display the monitoring status of all NetSpys having *nsyxname* specified.	

Usage

You can use the SCOPE operand to display all resources under the node name. For example, the following command will display the monitoring status of all controllers on LINE01:

```
DNS LINE01 SCOPE=PUS
```

A NetSpy-to-NetSpy connection must exist for one NetSpy to gather and display statistics from multiple NetSpys. You must specify the NSYXNAME parameter in the INITPRM of each NetSpy involved in this communication. Also, you must specify the CONNECT statement in STARTPRM or issue the CONNECT command from a NetSpy screen to establish the communication.

The NETSPY operand on the DNS command overrides the global NETSPY command for the requested display.

Example

To display the monitoring status of NCP001 for all NetSpys having *nsyxname* specified, enter the following command:

```
DNS NCP001 NETSPY=*
```

DNSA Command

The DNSA command displays the network accounting status of all NCPs defined to NetSpy on the Network Accounting Status screen.

Format

```
DNSA
```

DNTIC3 Command

The DNTIC3 command displays statistics for NCP TIC3 resources.

Format

```
DNTIC3 [nodename] [SCOPE=resource] [threshold] [mode]
       [NETSPY=nsyxname]
```

Operands

The DNTIC3 command has the following operands:

Operand	Explanation	
nodename	Specifies the line or PU for which you want to display TIC3 resource data.	
SCOPE=*resource*	Displays the following TIC3 data. Choose one:	
	ONLY	The resource matching the node name
	ALL	All TIC3 resources
	TIC3LINK	TIC3 physical link resources This is the *default*.
	TIC3PU	TIC3 logical PU resources
threshold	Displays only data on TIC3 resources that meets the following threshold criteria. Choose one:	
	UTL>*n*	Have a utilization percentage greater than *n*
	IFRMM>*n*	Have more than *n* I-frames sent and received
	BYTES>*n*	Have more than *n* bytes per second sent and received
	RIFRMS>*n*	Have more than *n* frames retransmitted
	RBYTES>*n*	Have more than *n* bytes retransmitted

Operand	Explanation	
	EFRMS>*n*	Have more than *n* error frames. For physical links, this is the sum of misaddressed, discarded, and unrecognized frames. For logical PUs, this is the total of rejected frames sent and received.
	TIMEOUTS>*n*	Have more than *n* LAN T2 timeouts. Valid with TIC3PUs only.
mode	Specifies the display mode, which displays data collected. You can specify INTERVAL, SUMMARY, or DELTA (which are explained under the DA Command).	
NETSPY=*nsyxname*	Displays statistics from the NetSpy identified by *nsyxname* in its INITPRM that matches the specific or generic *nsyxname* specified on this command. Specify an asterisk (*) (instead of *nsyxname*) to display statistics from all NetSpys having *nsyxname* specified.	

DNTR Command

The DNTR command displays statistics for the NTRI resources on the NCP or line that you specify.

Format

```
DNTR [nodename] [SCOPE=resource] [threshold] [mode]
     [NETSPY=nsyxname]
```

Operands

The DNTR command has the following operands:

Operand	Explanation	
nodename	Specifies the NCP or line for which you want to display NTRI resource data.	
SCOPE=*resource*	Displays the following NTRI data. Choose one:	
	ONLY	The resource matching the node name.
	ALL	All resources
	NTRIS	Token ring (TIC) resources (both physical and logical links) This is the *default*.
	LLINKS	Logical links on a token ring (TIC)

Operand	Explanation	
	PLINKS	Physical links on a token ring (TIC)
threshold	Displays only data on NTRI resources that meets the following threshold criteria. Choose one:	
	ACONS>*n*	Have more than *n* active connections. Valid with PLINKs only.
	BYTES>*n*	Send/receive more than *n* bytes per second.
	CNGCNT>*n*	Have a congestion count greater than *n*. Valid with PLINKs only.
	IFRMM>*n*	Transfer more than *n* I-frames per minute.
	OQLEN>*n*	Have an output queue length greater than *n*.
	RBYTES>*n*	Have retransmitted more than *n* bytes.
	RIFRMS>*n*	Have retransmitted more than *n* frames.
	TIMEOUTS>*n*	LLINKs for which more than *n* timeouts have occurred. Valid with LLINKs only.
	UTL>*n*	PLINKs that utilized more than *n* percent of the TIC (token interface coupler). Valid with PLINKS only.
mode	Specifies the display mode, which displays data collected. You can specify INTERVAL, SUMMARY, or DELTA (which are explained under the DA Command).	
NETSPY=*nsyxname*	Displays statistics from the NetSpy identified by *nsyxname* in its INITPRM that matches the specific or generic *nsyxname* specified on this command. Specify an asterisk (*) (instead of *nsyxname*) to display statistics from all NetSpys having *nsyxname* specified.	

DNX25 Command

The DNX25 command displays the NCP X.25 (NPSI) Network Statistics screen.

Note: You can display a selection menu by entering the DNX25M command.

Format

```
DNX25 [nodename] [SCOPE=resource] [threshold] [mode]
      [NETSPY=nsyxname]
```

Operands

The DNX25 command has the following operands:

Operand	Explanation
nodename	Specifies the node for which you want to display X.25 statistics. The default is '*' for all nodes. You can specify a generic node name.
SCOPE=*resource*	Displays the following X.25 data. Choose one: X25STATS — X.25 MCH lines, MCH PUs, and virtual circuits (VCs). This is the *default*. X25LINES — X.25 MCH lines X25PUS — X.25 MCH PUs X25VCS — X.25 VCs X25LUS — X.25 LUs X25ALL — All X.25 resources ONLY — The resource matching the node name ALL — All X.25 resources
threshold	Displays only X.25 MCH resources that meet the following threshold criteria. Choose one: IFRMM>*n* — Have an 'information frames per minute' rate greater than *n*. Valid with X25LINES and X25ALL only. OQLEN>*n* — Have an outbound queue length greater than *n*. Valid with X25LINES and X25ALL only. UTL>*n* — Have utilization greater than *n*. Valid with X25LINES and X25ALL only. PACKM>*n* — Have a 'packets per minute' rate greater than *n*. Valid with X25PUS, X25VCS, and X25ALL only.
mode	Specifies the display mode, which displays data collected. You can specify INTERVAL, SUMMARY, or DELTA, which are explained under the DA Command.
NETSPY=*nsyxname*	Displays statistics from the NetSpy identified by *nsyxname* in its INITPRM that matches the specific or generic *nsyxname* specified on this command. Specify an asterisk (*) (instead of *nsyxname*) to display statistics from all NetSpys having *nsyxname* specified.

Usage

You can use the SCOPE operand to display all resources under the node name. For example, the following command will display data for the XP001033 virtual circuit and all X.25 logical units on that virtual circuit:

```
DNX25 XP001033 SCOPE=X25PUS
```

DRTP Command

The DRTP command displays the VTAM RTP Data screen.

Format

```
DRTP
```

DT Command

The DT command displays the Terminal Traffic and Response Time Statistics screen. Optional operands allow for terminal selection, application selection, display mode selection, conditional response time constraints, and selection of NetSpy-to-NetSpy session data.

Format

```
DT [luname] [APPL=name] [threshold] [mode] [lu62_option] [NETSPY=nsyxname]
```

Operands

The DT command has the following operands:

Operand	Explanation
luname	Specifies the terminals whose data you want to display. Leaving the *luname* operand blank displays statistics only for terminals that have had activity during the current interval. You can specify: *luname* — The terminal generic name. ALL — All terminals that have active sessions and includes information that the default (blank) *luname* does not.
APPL=*name*	Specifies the specific or generic name (as explained in Generic Names) of the application for which you want statistics displayed. Use the application ID if you have specified APPLNAME=NETNAME in your initialization parameters.

Operand	Explanation
threshold	Displays only the terminals that meet the specified threshold criteria: AHRSP>*n* Average host response time greater than *n*, where *n* is in tenths of seconds ANRSP>*n* Average network response time greater than *n*, where *n* is in tenths of seconds WHRSP>*n* A worst host response time greater than *n*, where *n* is in tenths of seconds WNRSP>*n* A worst network response time greater than *n*, where *n* is in tenths of seconds
mode	Specifies the display mode, which displays data collected. You can specify INTERVAL, SUMMARY, or DELTA (which are explained under the DA Command).
lu62_option	Specifies whether or not to display LU 6.2 information in the display. Choose one: EXCLU62 Excludes LU 6.2 information ONLYLU62 Includes LU 6.2 information
NETSPY=*nsyxname*	Displays statistics from the NetSpy identified by nsyxname in its INITPRM that matches the specific or generic nsyxname specified on this command. Specify an asterisk (*) (instead of nsyxname) to display statistics from all NetSpys having nsyxname specified.

Usage

When you enter the DT command with no operands specified, or if you specify APPL without *luname* or ALL, NetSpy will display all terminals meeting the following default criteria:

- When EOT=LASTOUT (end-of-transaction mode in the initialization parameters) for a particular application, the default is terminals that have had *inputs* or *outputs* during the current interval.
- Otherwise, the default is terminals that have had *inputs* during the current interval.

A NetSpy-to-NetSpy connection must exist for one NetSpy to display statistics from multiple NetSpys. You must specify the NSYXNAME parameter in the INITPRM of each NetSpy involved in this communication. Also, you must specify the CONNECT statement in STARTPRM or issue the CONNECT command from a NetSpy screen to establish the communication.

The NETSPY operand on the DT command overrides the global NETSPY command for the requested display.

The INTERVAL, SUMMARY, or DELTA operand on the DT command overrides the global SETMODE command for the requested display.

Examples

To display terminals in INTERVAL mode with host response times greater than or equal to three seconds, enter:

```
DT AHRSP30
```

Or, to display terminals for all applications matching the generic name XYZ*, enter:

```
DT APPL=XYZ*
```

DTA Command

The DTA command displays the Terminal Response Time Analysis screen. Optional operands allow for terminal selection, application selection, display mode selection, conditional response time constraints, and selection of NetSpy-to-NetSpy session data.

Format

```
DTA [luname|ALL] [APPL=name] [threshold] [mode] [lu62_option] [NETSPY=nsyxname]
```

Operands

The DTA command has the following operands:

Operand	Explanation	
luname	Specifies the terminals whose data you want to display. You can specify:	
	luname	The terminal generic name.
	ALL	All terminals that have active sessions. The default is only terminals that have had inputs in the current interval.
APPL=*name*	Specifies the specific or generic name (as explained in Generic Names) of the application for which you want statistics displayed. Use the application ID if you have specified APPLNAME=NETNAME in your initialization parameters.	
threshold	Displays only the terminals that meet the specified threshold criteria:	
	AHRSP>*n*	Average host response time greater than *n*, where *n* is in tenths of seconds
	ANRSP>*n*	Average network response time greater than *n*, where *n* is in tenths of seconds

Operand	Explanation	
	WHRSP>*n*	A worst host response time greater than *n*, where *n* is in tenths of seconds
	WNRSP>*n*	A worst network response time greater than *n*, where *n* is in tenths of seconds
mode	Specifies the display mode, which displays data collected. You can specify INTERVAL, SUMMARY, or DELTA (which are explained under the DA Command).	
lu62_option	Specifies whether or not to display LU 6.2 information in the display. Choose one:	
	EXCLU62	Excludes LU 6.2 information
	ONLYLU62	Includes LU 6.2 information
NETSPY=*nsyxname*	Displays statistics from the NetSpy identified by *nsyxname* in its INITPRM that matches the specific or generic *nsyxname* specified on this command. Specify an asterisk (*) (instead of *nsyxname*) to display statistics from all NetSpys having *nsyxname* specified.	

Usage

The Response Time Analysis screen, produced by the DTA command, can display line and cluster statistics related to a specific LU if item one or two is correct:

1. Your copy of NetSpy is in session with the NPALU.
2. These three conditions are met:
   - You defined the NCP or line or cluster to NetSpy.
   - You specified the NetSpy-to-NetSpy COLLECT POLLSTAT statement in the STARTPRM to tell NetSpy where to obtain the information.
   - You specified the NETSPY parameter either on the VTAM Application and Terminal Statistics Menu or on the command line of a screen.

A NetSpy-to-NetSpy connection must exist for one NetSpy to gather and display statistics from multiple NetSpys. You must specify the NSYXNAME parameter in INITPRM for each NetSpy involved in this communication. Also, you must specify the CONNECT statement in STARTPRM or issue the CONNECT command from a NetSpy screen to establish the communication.

The NETSPY operand on the DTA command overrides the global NETSPY command for the requested display.

The INTERVAL, SUMMARY, or DELTA operand on the DTA command overrides the global SETMODE command for the requested display.

Note: The session information and the NCP information might be transferred to or requested from two different NetSpys.

Example

To display terminal response time analysis statistics for the LU named T13L19 and include data from the NetSpy matching *nsyxname* NETSPYXX, enter the following command:

```
DTA T13L19 NETSPY=NETSPYXX
```

DTCPC Command

The DTCPC command displays the TCP/IP Summary Statistics screen.

Format

```
DTCPC [ADDRESS=number | NAME=name]
```

Operand	Explanation
ADDRESS=*number*	TCP/IP host address.
NAME=*name*	TCP/IP host name.

Note: Names are not resolved during command processing. NetSpy matches the name provided in the command with one provided in the stack definition. If the stack was not defined by name, no match will occur.

DTCPCD Command

The DTCPCD command displays the TCP/IP Detailed Statistics screen.

Format

```
DTCPCD [ADDRESS=number | NAME=name]
```

Operand	Explanation
ADDRESS=*number*	TCP/IP host address.
NAME=*name*	TCP/IP host name.

Note: Names are not resolved during command processing. NetSpy matches the name provided in the command with one provided in the stack definition. If the stack was not defined by name, no match will occur.

DTCPS Command

The DTCPS command displays the TCP/IP Stack screen.

Format

```
DTCPS [ADDRESS=number | NAME=name]
```

Operand	Explanation
ADDRESS=*number*	TCP/IP host address.
NAME=*name*	TCP/IP host name.

Note: Names are not resolved during command processing. NetSpy matches the name provided in the command with one provided in the stack definition. If the stack was not defined by name, no match will occur.

DTCPV Command

The DTCPV command displays the VTAM TCP/IP Summary Statistics screen.

Format

```
DTCPV [ADDRESS=number | NAME=name]
```

Operand	Explanation
ADDRESS=*number*	TCP/IP host address.
NAME=*name*	TCP/IP host name.

Note: Names are not resolved during command processing. NetSpy matches the name provided in the command with one provided in the stack definition. If the stack was not defined by name, no match will occur.

DTNSTATS Command

The DTNSTATS command displays VTAM I/O tuning statistics on the NetSpy TNSTATS Display. Required operands let you specify resource names and types.

Format

```
DTNSTATS [resourcename] [TYPE=type]
```

Operands

The DTNSTATS command has the following operands:

Operand	Explanation
resourcename	Specifies the resource name (see Generic Names) for which you want statistics displayed. For example, the resource name of an NCP, channel-to-channel adapter, or local SNA cluster. If you specify the name of an NCP channel link, put it within single quotes, for example: 'AE0-L' You can specify a generic name or '*' for all.
TYPE=*type*	Indicates the type of the *resourcename*. CTCA — A channel to channel adapter. This is the *default* type. NCP — An NCP LSNA — A local SNA cluster MPC — A Multi-Path Channel (MPC)

Example

To display NCP tuning statistics for all NCPs beginning with the name "NCP", you would enter the following command:

```
DTNSTATS NCP* TYPE=NCP
```

DTOPO Command

The DTOPO command displays the Global APPN Topology Data screen.

Format

```
DTOPO
```

DTR Command

The DTR command displays the Terminal Response Time Distribution screen. Optional operands allow for specific terminal selection, specific application selection, display mode selection, conditional response time constraints, and selection of NetSpy-to-NetSpy session data.

Format

```
DTR [luname|ALL] [APPL=name] [threshold] [mode] [lu62_option]
    [NETSPY=nsyxname]
```

Operands

The DTR command has the following operands:

Operand	Explanation
luname	Specifies the terminals whose data you want to display. You can specify: *luname* — The terminal generic name. ALL — All terminals that have active sessions. The default is only terminals that have had inputs in the current interval.
APPL=*name*	Specifies the specific or generic name (as explained in Generic Names) of the application for which you want statistics displayed. Use the application ID if you have specified APPLNAME=NETNAME in your initialization parameters.
threshold	Displays only the terminals that meet the specified threshold criteria: AHRSP>*n* — Average host response time greater than *n*, where *n* is in tenths of seconds ANRSP>*n* — Average network response time greater than *n*, where *n* is in tenths of seconds WHRSP>*n* — A worst host response time greater than *n*, where *n* is in tenths of seconds WNRSP>*n* — A worst network response time greater than *n*, where *n* is in tenths of seconds
mode	Specifies the display mode, which displays data collected. You can specify INTERVAL, SUMMARY, or DELTA (which are explained under the DA Command).
lu62_option	Specifies whether or not to display LU 6.2 information in the display. Choose one: EXCLU62 — Excludes LU 6.2 information ONLYLU62 — Includes LU 6.2 information
NETSPY=*nsyxname*	Displays statistics from the NetSpy identified by *nsyxname* in its INITPRM that matches the specific or generic *nsyxname* specified on this command. Specify an asterisk (*) (instead of *nsyxname*) to display statistics from all NetSpys having *nsyxname* specified.

Usage

When you enter the DTR command with no operands specified, or if you specify APPL without *luname* or ALL, NetSpy will display all terminals meeting the following default criteria:

- When EOT=LASTOUT (end-of-transaction mode in the initialization parameters) for a particular application, the default is terminals that have had *inputs* or *outputs* during the current interval.
- Otherwise, the default is terminals that have had *inputs* during the current interval.

A NetSpy-to-NetSpy connection must exist for one NetSpy to gather and display statistics from multiple NetSpys. You must specify the NSYXNAME parameter in the INITPRM of each NetSpy involved in this communication. Also, you must specify the CONNECT statement in STARTPRM or issue the CONNECT command from a NetSpy screen to establish the session.

The NETSPY operand on the DTR command overrides the global NETSPY command for the requested display.

The INTERVAL, SUMMARY, or DELTA operand on the DTR command overrides the global SETMODE command.

Examples

To display statistics for terminals under the TSO2 application, enter the following command:

```
DTR APPL=TSO2 WNRSP50
```

Or, if you want to display statistics for terminals under applications that begin with the letters TSO, enter the following command:

```
DTR APPL=TSO*****
```

DTSMENU Command

The DTSMENU displays the NetSpy TNSTATS Selection Menu.

Format

```
DTSMENU
```

DUALERT Command

The DUALERT command displays the User Alerts Display.

Format

```
DUALERT
```

DUDPC Command

The DUDPC command displays the UDP Connection Summary Display.

Format

```
DUDPC [ADDRESS=number | NAME=name]
```

Operand	Explanation
ADDRESS=*number*	TCP/IP host address.
NAME=*name*	TCP/IP host name.

Note: Names are not resolved during command processing. NetSpy matches the name provided in the command with one provided in the stack definition. If the stack was not defined by name, no match will occur.

DUDPCD Command

The DUDPCD command displays the UDP Connection Detail Display.

Format

```
DUDPCD [ADDRESS=number | NAME=name]
```

Operand	Explanation
ADDRESS=*number*	TCP/IP host address.
NAME=*name*	TCP/IP host name.

Note: Names are not resolved during command processing. NetSpy matches the name provided in the command with one provided in the stack definition. If the stack was not defined by name, no match will occur.

DV Command

The DV command displays network delays for specific virtual routes and subareas on the VR Statistics display. Optional operands allow for virtual route selection, destination subarea selection, display mode selection, conditional response times, and selection of NetSpy-to-NetSpy session data.

Format

```
DV [VR=n] [SA=name] [threshold>n] [mode] [NETSPY=nsyxname]
```

Operands

The DV command has the following operands:

Operand	Explanation
VR=*n*	Specifies the number of the virtual route for which you want data displayed.
SA=*n*	Specifies the number of the destination subarea for which you want data displayed.
threshold	Displays data on virtual routes that meets the specified threshold criteria: ANRSP>*n* — Average network response time greater than *n*, where *n* is in tenths of seconds. #PIUS>*n* — Number of outbound PIUs greater than the input limit *n*. This operand can also be written as: NOPIUS>*n*. #MSGS>*n* — Number of messages greater than the input limit *n*. This operand can also be written as: NOMSGS>*n*.
mode	Specifies the display mode, which displays data collected. You can specify INTERVAL, SUMMARY, or DELTA, which are explained under the DA Command.
NETSPY=*nsyxname*	Displays statistics from a NetSpy identified by *nsyxname* in the INITPRM that matches the specific or generic *nsyxname* specified on this command. Specify an asterisk (*) (instead of *nsyxname*) to display statistics from all NetSpys having *nsyxname* specified.

Usage

A NetSpy-to-NetSpy connection must exist for one NetSpy to gather and display statistics from multiple NetSpys. You must specify the NSYXNAME parameter in the INITPRM of each NetSpy involved in this communication. Also, you must specify the CONNECT statement in STARTPRM or issue the CONNECT command from a NetSpy screen to establish the communication.

The NETSPY operand on the DV command overrides the global NETSPY command for the requested display.

The INTERVAL, SUMMARY, or DELTA operand on the DV command overrides the global SETMODE command for the requested display

Example

To display virtual route statistics having an average network response time greater than 0.2 seconds (since you last pressed Enter), enter:

```
DV DELTA ANRSP>2
```

DVO Command

The DVO command displays network delays for specific virtual routes and subareas on the VR Statistics display. Optional operands allow for virtual route selection, destination subarea selection, display mode selection, conditional response times, and selection of NetSpy-to-NetSpy session data.

Format

```
DVO [VR=n] [SA=name] [threshold>n] [mode] [NETSPY=nsyxname]
```

Operands

The DVO command has the following operands:

Operand	Explanation
VR=*n*	Specifies the number of the virtual route for which you want data displayed.
SA=*n*	Specifies the number of the destination subarea for which you want data displayed.
threshold	Displays data on virtual routes that meets the specified threshold criteria: ANRSP>*n* — Average network response time greater than *n*, where *n* is in tenths of seconds. #PIUS>*n* — Number of outbound PIUs greater than the input limit *n*. This operand can also be written as: NOPIUS>*n*. #MSGS>*n* — Number of messages greater than the input limit *n*. This operand can also be written as: NOMSGS>*n*.
mode	Specifies the display mode, which displays data collected. You can specify INTERVAL, SUMMARY, or DELTA, which are explained under the DA Command.
NETSPY=*nsyxname*	Displays statistics from a NetSpy identified by *nsyxname* in the INITPRM that matches the specific or generic *nsyxname* specified on this command. Specify an asterisk (*) (instead of *nsyxname*) to display statistics from all NetSpys having *nsyxname* specified.

Usage

A NetSpy-to-NetSpy connection must exist for one NetSpy to gather and display statistics from multiple NetSpys. You must specify the NSYXNAME parameter in the INITPRM of each NetSpy involved in this communication. Also, you must specify the CONNECT statement in STARTPRM or issue the CONNECT command from a NetSpy screen to establish the communication.

The NETSPY operand on the DVO command overrides the global NETSPY command for the requested display.

The INTERVAL, SUMMARY, or DELTA operand on the DVO command overrides the global SETMODE command for the requested display

Example

To display virtual route statistics having an average network response time greater than 0.2 seconds (since you last pressed Enter), enter:

```
DVO DELTA ANRSP>2
```

FORCEDR Command

The FORCEDR command forces a definite response on selected outputs sent by applications you specify. The percentage of application transactions for which this command applies is specified in the FORCEDR parameter of the APPL statement. See the *NetSpy Administrator Guide* for more information.

Format

```
FORCEDR ACT|INACT
```

Operands

The FORCEDR command has the following operands:

Operand	Explanation
ACT	Activates the FORCEDR feature.
INACT	Inactivates the FORCEDR feature.

Usage

The operand (ACT or INACT) is governed *initially* by the FORCEDR option in the INITPRM member.

Example

To activate the FORCEDR feature, enter the following command:

```
FORCEDR ACT
```

GALRT Command

The GALRT command displays the General Alert System Selection Menu.

Format

```
GALRT
```

GALWARN Command

The GALWARN command either activates or inactivates the general alert warning feature. See Activating Alert Warnings and Inactivating Alert Warnings in the chapter entitled "Using Alerts."

Format

```
GALWARN ACT|INACT
```

Operands

The GALWARN command has the following operands:

Operand	Explanation
ACT	Activates the general alert warning feature.
INACT	Inactivates the general alert warning feature.

GRAPH Command

The GRAPH command displays online graphical statistics based on the operands you specify in a GRAPH Report. If you previously entered the NETSPY command or parameter, the GRAPH command takes data from the NetSpys you specified.

Format

```
GRAPH resource_type=name [statistic] [NETSPY=nsyxname]
      [COMBINED] [INTERVAL=option] [STARTD=ddmmmyyyy]
      [STOPD=ddmmmyyyy] [STARTT=hh:mm:ss] [STOPT=hh:mm:ss]
```

Operands

The GRAPH command has the following operands:

Operand	Explanation
resource_type=name	Specifies the type and name of the resource. ***Name*** can be one of the following: **RLIST** — The resources defined in the resource list for the particular resource type. If you specify RLIST when no resource list has been defined, you will receive a warning message. For information on creating resource lists, see **Specifying Resource Lists** in the chapter entitled "Using the Displays" and RLIST Command. *** (asterisk)** — All known resources of the particular type. ***Resource_type*** can be one of the following:

Operand	Explanation	
	APPL	Applications. Use the application ID if you have specified APPLNAME=NETNAME in your initialization parameters.
	CA	Channel adapters. The CA must be defined to the NCP as a line.
	CLUSTER	Clusters
	ETH	Ethernet resources
	FR	Frame Relay resources
	LINE	Lines
	LU	Terminals
	NCP	NCPs
	NTRI	NTRI resources
	TERMINAL	Terminals
	TIC3	TIC3 resources
	VR	Virtual routes
	X25LINE	X.25 multichannel (MCH) lines
	X25PU	X.25 MCH physical units
	X25VC	X.25 virtual circuits
statistic	Graphs only the specified statistic. Note that each statistic is valid only with certain *resource_types*.	
	ANRSP	Average network response time. Valid with APPL, CLUSTER, LINE, LU, and VR only.
	AURSP	Average user response time for each time interval. Valid with APPL, CLUSTER, LINE, and LU only.
	BYTESS	Total number of bytes sent and received per second. Valid with TIC3 only.
	CCU	NCP cycle utilization for each time interval. Valid with NCP only.
	COLL	Average total number of single and multiple collisions. Valid with ETH only.
	CONGSCNT	Average congestion count. Valid with ETH, FR, and NTRI only.

Operand	Explanation	
	DFRMS	Number of discarded IP frames for the interval. Valid with ETH only.
	ERRS	Error count for each time interval. Valid with line and cluster only.
	FDISCARD	Average number of frames discarded during the interval. Valid with FR only.
	FRAMES	Average total number of frames sent and received per minute. Valid with TIC3 only.
	IFRMM	Information frames per minute rate for each time interval. Valid with ETH, FR, NTRI, TIC3, and X25LINE only.
	MSGSM	Messages per minute for each time interval (a message in this case is a single PIU segment). Valid with CA, CLUSTER, LINE, and TERMINAL only.
	OQLEN	Outbound queue length for each time interval. Valid with ETH, FR, NTRI, and X25LINE only.
	PACKM	Packets per minute rate for each time interval. Valid with X25PU and X25VC only.
	RETRANS	Percentage of retransmitted bytes. Valid with TIC3 only.
	SA=*number*	Specifies the statistics for a particular destination subarea in the backbone network. Valid with VR only.
	UBUF	NCP buffer utilization for each time interval. Valid with NCP only.
	UTL	Resource utilization (percentage) for each interval. Valid with LINE, NTRI, TIC3, and X25LINE only.
	#MSGS (or NOMSGS)	Number of messages for each time interval. Valid with APPL, CLUSTER, LINE, LU, and VR only.

Operand	Explanation
NETSPY=*nsyxname*	Displays statistics from the NetSpy identified by *nsyxname* in its INITPRM that matches the specific or generic *nsyxname* specified on this command. Specify an asterisk (*) (instead of *nsyxname*) to display statistics from all NetSpys having *nsyxname* specified.
COMBINED	Combines all resources that match the generic name qualifier into one single report.
INTERVAL= MINS(*n*)]DAYS(*d*)	Selects a time-reporting interval different from the collecting interval in the NetSpy records.
STARTD=*ddmmmyyyy*	Selects the start date for the report. Instead of specifying the start date with *ddmmmyyyy*, you may use the TODAY parameter for the current day.
STOPD=*ddmmmyyyy*	Selects the stop date for the report. Instead of specifying the stop date with *ddmmmyyyy*, you may use the TODAY parameter for the current day.
STARTT=*hh:mm:ss*	Selects the start time for the report.
STOPT=*hh:mm:ss*	Selects the stop time for the report.

Example

To request an online graphic report of line utilization for all known lines combined into a single arithmetic average, enter this command:

```
GRAPH LINE=* UTL COMBINED
```

HELP Command

The HELP command displays help information. When used with no operands, it works the same as pressing the F1 key.

Format

```
HELP [COMMANDS] [commandname]
```

Operands

The HELP command has the following operands:

Operand	Explanation
COMMANDS	Displays an index of NetSpy commands for which you can request help information.
commandname	Displays help on the command name that you specify.

HOSTIPA Command

The HOSTIPA command displays the TCP/IP Host Management Menu where you can add a stack.

Format

```
HOSTIPA ADDRESS=number | NAME=name
```

Operand	Explanation
ADDRESS=*number*	TCP/IP host address.
NAME=*name*	TCP/IP host name.

Note: Names are not resolved during command processing. NetSpy matches the name provided in the command with one provided in the stack definition. If the stack was not defined by name, no match will occur.

HOSTIPC Command

The HOSTIPC command displays the TCP/IP Host Management Menu where you can change a stack.

Format

```
HOSTIPC [ADDRESS=number | NAME=name]
```

Operand	Explanation
ADDRESS=*number*	TCP/IP host address.
NAME=*name*	TCP/IP host name.

Note: Names are not resolved during command processing. NetSpy matches the name provided in the command with one provided in the stack definition. If the stack was not defined by name, no match will occur.

HOSTIPD Command

The HOSTIPD command displays the TCP/IP Host Management Menu where you can delete a stack.

Format

```
HOSTIPD [ADDRESS=number | NAME=name]
```

Operand	Explanation
ADDRESS=*number*	TCP/IP host address.
NAME=*name*	TCP/IP host name.

Note: Names are not resolved during command processing. NetSpy matches the name provided in the command with one provided in the stack definition. If the stack was not defined by name, no match will occur.

LOGOFF Command

The LOGOFF command terminates a user session with NetSpy.

Format

```
LOGOFF
```

MENU Command

The MENU or LOGO command displays the NetSpy Main Menu.

Format

```
MENU or LOGO
```

MVS Modify Command

The MVS Modify command allows NetSpy commands to be issued from the OS/390 system console using the modify command interface.

Format

```
F netspy,command
```

Operands

The MVS Modify command has the following operands:

Operand	Explanation
netspy	Specifies the name of the NetSpy started task.
command	Refers to a NetSpy command, which is identical in format to the explicit command that you enter at the bottom of a NetSpy screen. The COLLECT, CONNECT, DEFINE, DELETE, DISCONN, FORCEDR, NCPRETRY, PNSA, PSMF, PTASK, SSMF, STASK, and STOP commands are supported by the console interface. See Summary of Commands for a description of these commands. **Note:** These commands, along with the MVS STOP command, will be available regardless of the STOP= parameter setting in INITPRM.

NCPRETRY Command

The NCPRETRY command tells NetSpy how many times it should try to acquire an NCP's NPALU session either after the session has been lost or an attempt to acquire it has failed. This command overrides the NCPRETRY setting in INITPRM. It does not override the RETRY keyword on the DEFINE statement in STARTPRM.

Format

```
NCPRETRY=number|(number,time)
```

Operands

The NCPRETRY command has the following operands:

Operand	Explanation
number	Indicates the number of times NetSpy will try to acquire an NCP's NPALU session. Valid values are 0 to 9999.
time	Indicates the time between retries in minutes. Valid values are 1 to 9999.

NDSP Command

The NDSP command displays the NCP Statistics Selection Menu.

Format

```
NDSP
```

NETSPY Command

The NETSPY command allows you to specify on a global or local basis the network data you want to include in the displays. You can display data from different NetSpys, with which you have established a NetSpy-to-NetSpy communications session, on one terminal.

Format

```
NETSPY=nsyxname|*|LOCAL
```

Operands

The NETSPY command has the following operands:

Operand	Explanation
nsyxname	Identifies the specific or generic network name of the NetSpy you want to communicate with. The *nsyxname* on this command must match the *nsyxname* specified in the INITPRM of the other NetSpy.
*	Specifies all NetSpys that have an *nsyxname* specified. The asterisk (*) indicates that you want data from all NetSpys to be included in the displays.
LOCAL	Specifies the local NetSpy to which you are logged on.

Usage

You can enter the NETSPY command from the command line of any screen. To override the global NETSPY command, you can specify the NETSPY operand on the DA, DAR, DN, DNS, DT, DTA, DTR, and DV commands. NetSpy resumes the original setting after you have finished viewing these displays.

A NetSpy-to-NetSpy session must exist to gather and display data from multiple NetSpys. You must specify the NSYXNAME parameter in INITPRM for each NetSpy involved in this communication. Also, you must specify the CONNECT statement in STARTPRM or issue the CONNECT command from a NetSpy screen to establish the communication.

The Summary of Commands section shows what commands use data from other NetSpys.

To enable these commands to use data from other NetSpys, you must have specified these commands and parameters:

- The NSYXNAME parameter for all NetSpys that are to communicate.
- The CONNECT command online or CONNECT statement in STARTPRM, stating which NetSpys are to communicate with each other. These NetSpys are identified by their *nsyxname*.
- The NETSPY command, operand, or option identifies which NetSpy's data you want to see.

Example

The following example tells your copy of NetSpy to include data from the remote NetSpy known as NETSPYZZ (*nsyxname* in INITPRM) on all displays that support NetSpy-to-NetSpy communications:

```
NETSPY=NETSPYZZ
```

NTNOPER Command

The NTNOPER command displays the NetSpy-to-NetSpy Operator screen, where you can check the status of NetSpy-to-NetSpy communication and start or stop NetSpy-to-NetSpy sessions.

Format

```
NTNOPER
```

OPER Command

The OPER command displays the NetSpy Menu of Available Operator Commands.

Format

```
OPER
```

PNSA Command

The PNSA command stops network accounting for the specified NCP.

Format

```
PNSA NCP=ncpname [TYPE=NSA|GWA]
```

Operands

The PNSA command has the following operands:

Operand	Explanation
NCP=*ncpname*|ALL	Specifies the NCP for which network accounting should be stopped. There is no default. Choose one: *ncpname* — The name of the NCP. ALL — All NCPs. You can specify an asterisk (*) instead of ALL.

Operand	Explanation
TYPE=NSA|GWA	Specifies the type of accounting to be stopped. Choose one: NSA — Session accounting. This is the *default*. GWA — Gateway accounting.

Example

To stop gateway accounting for all NCPs, enter the following command:

```
PNSA NCP=ALL TYPE=GWA
```

PRINT Command

The PRINT command displays online summary records based on the operands you specify. If you previously entered the NETSPY command or parameter, the PRINT command takes data from the NetSpys you specified. Data is displayed in a PRINT Report.

Format

```
PRINT resource_type=name [threshold] [NETSPY=nsyxname]
      [STARTD=ddmmmyyyy] [STOPD=ddmmmyyyy] [STARTT=hh:mm:ss]
      [STOPT=hh:mm:ss]
```

Operands

The PRINT command has the following operands:

Operand	Explanation
resource_type=name	Specifies the type and name of the resource. ***Name*** can be one of the following: **RLIST** — The resources defined in the resource list for the particular resource type. If you specify RLIST when no resource list has been defined, you will receive a warning message. See the chapter entitled "Using the Displays" and the section RLIST Command in this chapter " for more information on creating resource lists. *** (asterisk)** — All known resources of the particular type. ***Resource_type*** can be one of the following:

Operand	Explanation	
	APPL	Applications. Use the application ID if you have specified APPLNAME=NETNAME in your initialization parameters.
	BUFFERS	Buffer pools. The buffer pool name can be specified as *xx*BUF, *xx*00, *xx*, *, or as a generic name where *xx* is the two- or four-character buffer pool identifier.
	CA	Channel adapters. The CA must be defined to the NCP as a line.
	CLUSTER	Clusters
	ETH	Ethernet resources
	FR	Frame Relay resources
	LINE	Lines
	LU	Terminals
	NCP	NCPs
	NTRI	NTRI resources
	TERMINAL	Terminals
	TIC3	TIC3 resources
	VR	Virtual routes
	X25LINE	X.25 multichannel (MCH) lines
	X25PU	X.25 MCH physical units
	X25VC	X.25 virtual circuits
	X25STAT	All X.25 statistics (X.25 lines, X.25 PUs, and X.25 VCs)
threshold	Displays statistics that meet the following threshold criteria. Note that each statistic is valid only with certain *resource_types*. Choose one:	
	ANRSP>*n*	Average network response time that exceeds *n*. Valid with APPL, CLUSTER, LINE, LU, and VR only.
	AURSP>*n*	Average user response time that exceeds *n*. Valid with APPL, CLUSTER, LINE, and LU only.

Operand	Explanation	
	BYTES>*n*	Total number of bytes sent and received per second that exceeds *n*. Valid with TIC3 only.
	CCU>*n*	NCP cycle utilization that exceeds *n*. Valid with NCP only.
	COLL>*n*	Average total number of single and multiple collisions that exceeds *n*. Valid with ETH only.
	CONGSCNT>*n*	Average congestion count that exceeds *n*. Valid with ETH, FR, and NTRI only.
	DFRMS>*n*	Number of discarded IP frames that exceed *n*. Valid with ETH only.
	ERRS>*n*	Error count that exceeds *n*. Valid with CLUSTER and LINE only.
	FDISCARD>*n*	Average number of frames discarded that exceed *n*. Valid with FR only.
	FRAMES>*n*	Average total number of frames sent and received per minute that exceeds *n*. Valid with TIC3 only.
	IFRMM>*n*	Information frames per minute rate that exceeds *n*. Valid with ETH, FR, NTRI, TIC3, and X25LINE only.
	MSGSM>*n*	Messages per minute that exceed *n* (a message in this case is a single PIU segment). Valid with CA, CLUSTER, LINE, and TERMINAL only.
	OQLEN>*n*	Outbound queue length that exceeds *n*. Valid with ETH, FR, NTRI, and X25LINE only.
	PACKM>*n*	Rate of packets per minute that exceeds *n*. Valid with X25PU and X25VC only.
	RETRANS>*n*	Percentage of retransmitted bytes that exceed *n*. Valid with TIC3 only.

Operand	Explanation	
	SA=*number*	Specifies the statistics for a particular destination subarea in the backbone network. An asterisk (*) selects all destination subarea numbers in the default SA resource list. Valid with VR only.
	UBUF>*n*	NCP buffer utilization that exceeds *n*. Valid with NCP only.
	UTL>*n*	Resource utilization (percentage) that exceeds *n*. Valid with LINE, NTRI, TIC3, and X25LINE only.
	#MSGS>*n* (or NOMSGS>*n*)	Number of messages that exceed *n*. Valid with APPL, CLUSTER, LINE, LU, and VR.
NETSPY=*nsyxname*	Displays statistics from the NetSpy identified by *nsyxname* in its INITPRM that matches the specific or generic *nsyxname* specified on this command. Specify an asterisk (*) (instead of *nsyxname*) to display statistics from all NetSpys having *nsyxname* specified.	
STARTD=*ddmmmyyyy*	Selects the start date for the report. Instead of specifying the start date with *ddmmmyyyy*, you may use the TODAY parameter for the current day.	
STOPD=*ddmmmyyyy*	Selects the stop date for the report. Instead of specifying the stop date with *ddmmmyyyy*, you may use the TODAY parameter for the current day.	
STARTT=*hh:mm:ss*	Selects the start time for the report.	
STOPT=*hh:mm:ss*	Selects the stop time for the report.	

Example

To request an online report of all terminals with average user response time greater than six seconds, enter this command:

```
PRINT LU=* AURSP>60
```

PSMF Command

The PSMF command stops collecting traffic and error statistics through the NCP interface for those NCP resources matching the *nodename* and SCOPE specifications. Data logging to all destinations is also stopped.

Format

```
PSMF nodename SCOPE=resource
```

Operands

The PSMF command has the following operands:

Operand	Explanation
nodename	Specifies the NCP resource (NCP, line, cluster, or terminal) for which you want to stop collecting traffic and error statistics. NetSpy must be collecting data for the resource you specify.
SCOPE=*resource*	Stops collecting data on the following resources for the specified node:

LINES	Non-NTRI and non-X.25 lines
PUS	Non-NTRI and non-X.25 controllers
LUS	Non-NTRI and non-X.25 terminals
ONLY	The resource matching *nodename*
ALL	All resources
X25LINES	X.25 multi-channel (MCH) lines
X25PUS	X.25 MCH physical units
X25VCS	X.25 virtual circuits
X25STATS	X.25 virtual circuits, X.25 MCH lines, and X.25 MCH physical units
X25LUS	X.25 logical units
X25ALL	All X.25 resources
NTRIS	Token ring (TIC) resources (both physical and logical links)
LLINKS	Logical links on a token ring (TIC)
PLINKS	Physical links on a token ring (TIC)
ALLLINES	All lines
ALLPUS	All control units
ALLLUS	The node and all terminals within the node

Operand	Explanation	
	FRPLINK	Frame Relay physical link resources
	FRLLINK	Frame Relay logical link resources
	FRPU	Frame Relay physical unit resources
	FRALL	All Frame Relay resources
	ETHPLINK	Ethernet physical link resources
	ETHALL	All Ethernet resources
	TIC3LINK	TIC3 physical line resources
	TIC3PU	TIC3 logical PU resources
	TIC3ALL	Both TIC3 physical lines and logical PUs

Usage

The PSMF is accepted only if NetSpy is collecting data for the nodes you specify.

Example

To stop monitoring traffic and error statistics for NCP002 and all of its lines, enter:

```
PSMF NCP002 SCOPE=ALLLINES
```

PTASK Command (*Privileged*)

The PTASK command stops and disables the specified subtask. Only a privileged user can execute this command.

Format

PTASK *subtask*

Operands

See the STASK command for a list of subtasks that are supported.

REPORT Command

The REPORT command displays the Online Report Menu.

Format

```
REPORT
```

RESOURCE Command

The RESOURCE command displays the Resource List Initialization Menu.

Format

```
RESOURCE
```

RLIST Command

You use the RLIST command to create, delete, or append to a resource list for a particular resource type. Resource lists tell NetSpy which resources to include in or exclude from graphic and trace alert displays, modeling and recommendations and online reports when you specify RLIST as a resource name.

Format

```
RLIST resource_type {LIST(names)|FILE(files)}
      {CREATE|APPEND|DISPLAY|DELETE} [INCLUDE|EXCLUDE]
```

Operands

The RLIST command has the following operands:

Operand	Explanation	
resource_type	Specifies the resource type. Choose one:	
	APPL	Application
	CA	Channel adapter
	FORAPPL	LUs in session with the applications you identify
	FORLINE	LUs located on the lines you identify
	FORPU	LUs located on the PUs you identify
	LINE	Line
	LU	Terminal
	NCP	NCP
	PU	PU (cluster)
	SA	Subarea for the virtual routes are indicated in either a VR resource name field or a VR resource list
	VR	Virtual route
LIST(names)	Specifies up to 1000 resource names. You can specify one or more asterisks or a question mark as part of a generic name.	

Operand	Explanation
FILE(files)	Specifies one or more files that, in turn, specify up to 1000 resource names. Valid file names include any member of the data set identified through the //RSCPARM DD statement in the NetSpy PROC, the JCL that starts NetSpy. This member must be fixed and blocked, with a logical record length of 80 bytes.
CREATE	Creates this resource list. This is the *default*.
APPEND	Appends to this resource list.
DISPLAY	Displays the resource list for the resource you specified. See the chapter entitled "Using the Displays."
DELETE	Deletes this resource list.
INCLUDE	Includes the resources in the graphic and trace alert displays, and batch and online reports. If no previous list has been specified, this is the default. When a list is specified with EXCLUDE, EXCLUDE becomes the default.
EXCLUDE	Excludes the resources from the graphic and trace alert displays, modeling and recommendations, and online reports.

Usage

Resource lists can specify either resource names or files that in turn contain resource names. If there is no resource list for a particular resource type, the graphic or alert display contains data on all known resources of that type.

When you create a resource list through the RLIST command, it is valid only for your user ID and only until you log off the system. You can also create resource lists through the Resource List Initialization Menu.

Example

To create a resource list that excludes the applications APPL1, APPL2, and APPL7, you would enter the following command:

```
RLIST APPL=LIST(APPL1,APPL2,APPL7) CREATE EXCLUDE
```

SETMODE Command

The SETMODE command allows you to display current VTAM, NCP, and virtual route statistics in one of three modes: interval, summary, or delta. This command is user specific, affecting the way you alone see the statistics. By specifying the SETMODE command, you receive all current VTAM, NCP, and VR statistics in the same mode without having to select this mode on the respective menu.

Format

```
SETMODE=mode
```

Operands

The SETMODE command has the following operands:

Operand	Explanation	
mode	Displays data collected in the following modes. If a mode is not specified, NetSpy displays the statistics in interval mode.	
	INTERVAL	From the beginning of an interval. This mode is the *default*.
	SUMMARY	From the start of your request.
	DELTA	Since the last time you pressed Enter.

Usage

To change the mode NetSpy is using to display statistics, take one of the following actions:

- Issue another SETMODE command from the command line of any screen.
- Override the current setting by specifying DELTA or SUMMARY on another command. After this command is terminated, the mode will return to the setting indicated on the last SETMODE command, or to INTERVAL if no SETMODE command was issued.

You can change modes without losing any collection data for the individual display. NetSpy maintains the data display according to the mode you specify. To change between modes, issue the SETMODE command for the mode you want next.

Examples

To display NCP statistics in delta mode for the resource NCP1, issue this command:

```
DN NCP1 DELTA
```

To display application and response time statistics in summary mode for the resource APPL2, issue this command:

```
DA APPL2 SUMMARY
```

To set the display mode to delta for all your VTAM, NCP, and VR statistics displays, issue this command:

```
SETMODE=DELTA
```

SHUTDOWN Command

The SHUTDOWN command terminates NetSpy just as if it had been stopped at the operator console. It is a synonym of the $PNETSPY command.

Format

```
SHUTDOWN
```

SNSA Command

The SNSA command takes you directly to the Start Network Accounting Display screen.

Format

```
SNSA
```

SSMF Command

The SSMF command starts collecting traffic and error statistics through the NCP interface for those NCP resources matching the *nodename* and SCOPE specifications. SMF records will be written **only** if the SMF statement in INITPRM is equal to a positive value. Log records will be written to the Log **only** if the LOGSTART statement was specified (in INITPRM), and to the Database **only** if the DBSTART statement was specified (in INITPRM).

Format

```
SSMF nodename SCOPE=resource
```

Operands

The SSMF command has the following operands:

Operand	Explanation	
nodename	Specifies the NCP resource (NCP, line, cluster, or terminal) for which you want to start collecting traffic and error statistics. This node must have been previously defined.	
SCOPE=*resource*	Starts collecting data on the following resources for the specified node:	
	LINES	Non-NTRI and non-X.25 lines
	PUS	Non-NTRI and non-X.25 controllers
	LUS	Non-NTRI and non-X.25 terminals
	ONLY	The resource matching *nodename* This is the *default*.
	ALL	All resources
	X25LINES	X.25 multi-channel (MCH) lines
	X25PUS	X.25 MCH physical units
	X25VCS	X.25 virtual circuits
	X25STATS	X.25 virtual circuits, X.25 MCH lines, and X.25 MCH physical units

Operand	Explanation	
	X25LUS	X.25 logical units
	X25ALL	All X.25 resources
	NTRIS	Token ring (TIC) resources (both physical and logical links).
	LLINKS	Logical links on a token ring (TIC)
	PLINKS	Physical links on a token ring (TIC)
	ALLLINES	All lines
	ALLPUS	All control units
	ALLLUS	The node and all terminals within the node.
	FRPLINK	Frame Relay physical link resources
	FRLLINK	Frame Relay logical link resources
	FRPU	Frame Relay physical unit resources
	FRALL	All Frame Relay resources
	ETHPLINK	Ethernet physical link resources
	ETHALL	All Ethernet resources
	TIC3LINK	TIC3 physical line resources
	TIC3PU	TIC3 logical PU resources
	TIC3ALL	Both TIC3 physical lines and logical PUs

Usage

To stop data collection for the resources later, you must use the PSMF command.

Example

To start monitoring traffic and error statistics for NCP002 and all of its lines, enter:

```
SSMF NCP002 SCOPE=ALLLINES
```

STASK Command (*Privileged*)

The STASK command starts and enables the specified subtask. Subtasks not started at initialization, because no initialization parameters called for that subtask, are not eligible for starting with this command.

Format

STASK *subtask*

Operands

The STASK command supports the following subtasks:

Subtask	Explanation
NSYALTSK	Alert subtask
NSYLOGR	Log read subtask
NSYLOGW	Log write subtask
NSYPMTSK	Performance monitor interface subtask
NSYSNMT1	TCP/IP master subtask
NSYTRCR	Trace read subtask
NSYTRCW	Track write subtask
NSYXTASK	NetSpy-to-NetSpy subtask
Default Subtask = None	

STAT Command

The STAT command allows you to display important tuning statistics by invoking the Online Tuning Statistics Display without having to stop NetSpy.

Format

STAT

This command has no operands.

Usage

Use this command to cause a display of the important tuning statistics to determine if any of the maximum values set by your INIT parms have been exceeded and how often.

SUMMARY Command

The SUMMARY command displays online summary statistics based on the operands you specify in a SUMMARY Report. If you previously entered the NETSPY command or parameter, the SUMMARY command takes data from the NetSpys you specified.

Format

```
SUMMARY resource_type=name [threshold] [NETSPY=nsyxname]
        [COMBINED] [INTERVAL=MINS(n)|DAYS(d)] [STARTD=ddmmmyyyy]
        [STOPD=ddmmmyyyy] [STARTT=hh:mm:ss] [STOPT=hh:mm:ss]
```

Operands

The SUMMARY command has the following operands:

Operand	Explanation
resource_type=name	Specifies the type and name of the resource. ***Name*** can be one of the following: **RLIST** — The resources defined in the resource list for the particular resource type. If you specify RLIST when no resource list has been defined, you will receive a warning message. For information on creating resource lists, see RLIST Command in this chapter and Specifying Resource Lists in the chapter entitled "Using the Displays." *** (asterisk)** — All known resources of the particular type. ***Resource_type*** can be one of the following: APPL — Applications. Use the application ID if you have specified APPLNAME=NETNAME in your initialization parameters. CA — Channel adapters. The CA must be defined to the NCP as a line. CLUSTER — Clusters ETH — Ethernet resources FR — Frame Relay resources LINE — Lines LU — Terminals NCP — NCPs NTRI — NTRI resources TERMINAL — Terminals TIC3 — TIC3 resources VR — Virtual routes X25LINE — X.25 multichannel (MCH) lines X25PU — X.25 MCH physical units X25VC — X.25 virtual circuits
threshold	Displays statistics that meet the following threshold criteria. Note that each statistic is valid only with certain *resource_types*. Choose one:

Operand	Explanation
ANRSP	Average network response time. Valid with APPL, CLUSTER, LINE, LU, and VR only.
AURSP	Average user response time. Valid with APPL, CLUSTER, LINE, and LU only.
BYTESS	Total number of bytes sent and received per second. Valid with TIC3 only.
CCU	NCP cycle utilization for each time interval. Valid with NCP only.
COLL	Average total number of single and multiple collisions. Valid with ETH only.
CONGSCNT	Average congestion count. Valid with ETH, FR, and NTRI only.
DFRMS	Number of discarded IP frames. Valid with ETH only.
ERRS	Error count. Valid with CLUSTER and LINE only.
FDISCARD	Average number of frames discarded. Valid with FR only.
FRAMES	Average total number of frames sent and received per minute. Valid with TIC3 only.
IFRMM	Information frames per minute rate. Valid with ETH, FR, NTRI, TIC3, and X25LINE only.
MSGSM	Messages per minute that exceed *n* (a message in this case is a single PIU segment). Valid with CA, CLUSTER, LINE, and TERMINAL only.
OQLEN	Outbound queue length. Valid with ETH, FR, NTRI, and X25LINE only.
PACKM	Rate of packets per minute. Valid with X25PU and X25VC only.
RETRANS	Percentage of retransmitted bytes. Valid with TIC3 only.
SA=*number*	Specifies the statistics for a particular destination subarea in the backbone network. An asterisk (*) selects all destination subarea numbers in the

Operand	Explanation	
		default SA resource list. Valid with VR only.
	UBUF	NCP buffer utilization. Valid with NCP only.
	UTL	Resource utilization. Valid with LINE, NTRI, TIC3, X25LINE only.
	#MSGS (or NOMSGS)	Number of messages. Valid with APPL, CLUSTER, LINE, LU, and VR only.
NETSPY=*nsyxname*	Displays statistics from the NetSpy identified by *nsyxname* in its INITPRM that matches the specific or generic *nsyxname* specified on this command. Specify an asterisk (*) (instead of *nsyxname*) to display statistics from all NetSpys having *nsyxname* specified.	
COMBINED	Combines all resources that match the generic name qualifier into one single report.	
INTERVAL= MINS(*n*)|DAYS(*d*)	Selects a time-reporting interval different from the collecting interval in the NetSpy records.	
STARTD=*ddmmmyyyy*	Selects the start date for the report. Instead of specifying the start date with *ddmmmyyyy*, you may use the TODAY parameter for the current day.	
STOPD=*ddmmmyyyy*	Selects the stop date for the report. Instead of specifying the stop date with *ddmmmyyyy*, you may use the TODAY parameter for the current day.	
STARTT=*hh:mm:ss*	Selects the start time for the report.	
STOPT=*hh:mm:ss*	Selects the stop time for the report.	

Example

To request an online report showing the number of input and output messages for the CICS application on an hourly basis, enter the following command:

```
SUMMARY APPL=CICS #MSGS INTERVAL=MINS(60)
```

SWITCH Command

The SWITCH command changes the currently active audit log to inactive status and makes the inactive log active, or, if the audit log is directed to SYSOUT, will spin off the current log, and start a new SYSOUT data set.

Format: SWITCH

Operands: This command has no operands.

Usage: **If the audit log is being written to SYSOUT:** the current log will be spun off and a new SYSOUT audit log allocated, provided an AUDITCLS parameter was found in the INIT parms.

If the audit log is being written to disk: this will cause a switch between the primary and secondary audit log before the current data set is full. Use this command to make the current audit log file inactive so it can be copied or backed up.

Warning: *Using this command when the audit log is being written to disk may result in the log data being written out of chronological order on the next restart of NetSpy. NetSpy will examine the AUDIT1 data set when it is restarted and will start writing to the data set if it is not full. Thus if you switch from AUDIT1 to AUDIT2 before the AUDIT1 file is full, and the AUDIT2 file does not fill up before NetSpy is shut down, on the next restart, you will have some data from the previous and current execution in AUDIT1 and the rest of the data from the previous execution in AUDIT2.*

TCPIP Command

The TCPIP command displays the TCP/IP Primary Menu.

Format

```
TCPIP
```

TCPIPC Command

The TCPIPC command displays the TCP/IP Display Menu.

Format

```
TCPIPC [ADDRESS=number | NAME=name]
```

Operand	Explanation
ADDRESS=*number*	TCP/IP host address.
NAME=*name*	TCP/IP host name.

Note: Names are not resolved during command processing. NetSpy matches the name provided in the command with one provided in the stack definition. If the stack was not defined by name, no match will occur.

TCPIPH Command

The TCPIPH command displays the TCP/IP Host Management Menu.

Format

```
TCPIPH [ADDRESS=number | NAME=name]
```

Operand	Explanation
ADDRESS=*number*	TCP/IP host address.
NAME=*name*	TCP/IP host name.

Note: Names are not resolved during command processing. NetSpy matches the name provided in the command with one provided in the stack definition. If the stack was not defined by name, no match will occur.

TRACE Command

The TRACE command displays the Trace Facilities Menu.

Format

```
TRACE
```

TRACED Command

The TRACED Command displays the Trace Display Parameters menu.

Format

```
TRACED
```

TRACEO Command

The TRACEO command displays the Trace Facilities Operator Commands menu.

Format

```
TRACEO
```

TRACES Command

The TRACES command displays the Trace Status Menu.

Format

```
TRACES
```

TRCD Command

The TRCD command allows you to request displays of trace records based on the operands you specify.

Format

```
TRCD LUNAME=name|luname [APPL=name] [STARTT=hh:mm:ss]
     [STOPT=hh:mm:ss] [STARTD=ddmmmyyyy] [STOPD=ddmmmyyyy]
```

Operands

The TRCD command has the following operands:

Operand	Explanation
LUNAME=*name*	Specifies the specific or generic (as explained in Generic Names) terminal name for the terminal or group of terminals you want to include in the display. The *default* is to display all records.
luname	Specifies the generic terminal name of all terminals for which you want records displayed.

Operand	Explanation
APPL=*name*	Specifies the specific or generic name of the application having trace records you want to display.
STARTT=*time*	Selects the start time for the display and is specified as *hh:mm:ss* or *hh:mm*.
STOPT=*time*	Selects the stop time for the display and is specified as *hh:mm:ss* or *hh:mm*.
STARTD=*date*	Selects the start date for the display and is specified as *ddmmmyyyy* or *yyyyddd*.
STOPD=*date*	Selects the stop date for the display and is specified as *ddmmmyyyy* or *yyyyddd*.

Example

To request a display of all trace records for the terminal DXAL568, enter:

```
TRCD DXAL568
```

VDSP Command

The VDSP command displays the VTAM Application and Terminal Statistics Menu.

Format

```
VDSP
```

$PNETSPY Command

The $PNETSPY command terminates NetSpy just as if it had been stopped at the operator console. The SHUTDOWN command is a synonym for $PNETSPY.

Format

```
$PNETSPY or SHUTDOWN
```

Chapter

6 Displaying Real-time Data

You can display collected statistics of your network's real-time (current) activity by using the menus and screen display panels described in this chapter.

Requesting Cross-NetSpy Data

The NetSpy-to-NetSpy communication interface allows you to gather statistics from multiple NetSpys in your network and have this data appear on your terminal. You can request NetSpy-to-NetSpy data for the real-time displays in any of the following ways:

- Add the NETSPY operand to the DA, DAR, DN, DNCB, DNETH, DNFR, DNS, DNX25, DT, DTA, DTR, and DV commands
- Specify the NETSPY parameter on any of these menus:
  - VTAM Application and Terminal Statistics Menu
  - NCP Statistics Menu
  - Virtual Route Statistics Display Menu
- Enter the NETSPY command from the command line of any screen.

By specifying the NSYXNAME and CONNECT parameters, you activate this interface to collect data from one or more NetSpys. See the *NetSpy Administrator Guide* for more information on these parameters.

Navigating the Displays

To move through the displays, use the menus or enter explicit commands on the bottom of the screen.

Function Keys

You can use the following keys while viewing the displays:

Key	Function
F1	Accesses online help
F2	Activates refresh mode for current interval statistics so that the screen is refreshed at every base interval. To deactivate refresh mode, press F2 again. The BASEITVL statement in the INITPRM file sets the base interval.
Enter	Updates the statistics on the current screen
PA1	Recalls the last explicit command entered
PA2	Recalls the data previously cleared on a menu
F7	Pages backward
F8	Pages forward
CLEAR	Clears data input fields on a menu

Generic Names

Information about using generic names can be found in the chapter entitled "Using the Displays."

Notes About Displayed Data

Note the following about NetSpy displays.

- NetSpy displays statistics for activity that has taken place during the specified interval.
- If requested, NetSpy writes all statistics to disk at the end of each interval period and clears all counters.
- When Measured Interval= appears on the display, the line shows the interval that you specified.
  - If you are displaying data in summary mode, the interval represents the time elapsed since you issued the SUMMARY command.
  - If you are displaying data in delta mode, the interval represents the time elapsed since you pressed Enter last.
  - If you are displaying data in interval mode, the notation represents the time that has passed since the beginning of the last interval.
- The interval mode (summary, delta, or interval) appears in the right portion of the screen header, showing the mode you are currently using for the displays.
- The HOST ID of the monitored host or the SMF system ID is displayed at the top of each display.
- On all displays, the response time is in seconds unless followed by an M meaning minutes, an H meaning hours, or a D meaning days.
- Displays of terminal data grouped by LINE or CLUSTER are limited to 300 lines.
- A blank in any field indicates that there is no information available.
- An N/A (Not Applicable) in any field indicates that the data is not being collected, or cannot be calculated.
- A value of 0.0 indicates data that rounds to zero (values less than 0.05).

Viewing VTAM Application and Terminal Statistics

The VTAM Application and Terminal Statistics Menu allows you to display various response time statistics related to applications and terminals, and to specify optional parameters that customize the display. After you press the Enter key, you receive a display of the requested statistics.

This chapter contains an example of each display and explanations of the parameters that you can specify. See the appendix entitled "Report and Display Headings" for an alphabetical listing of column headings and explanations.

Menu and Displays

The following illustration shows the VTAM Application and Terminal Statistics Menu, and the screens for displaying various types of VTAM response time statistics.

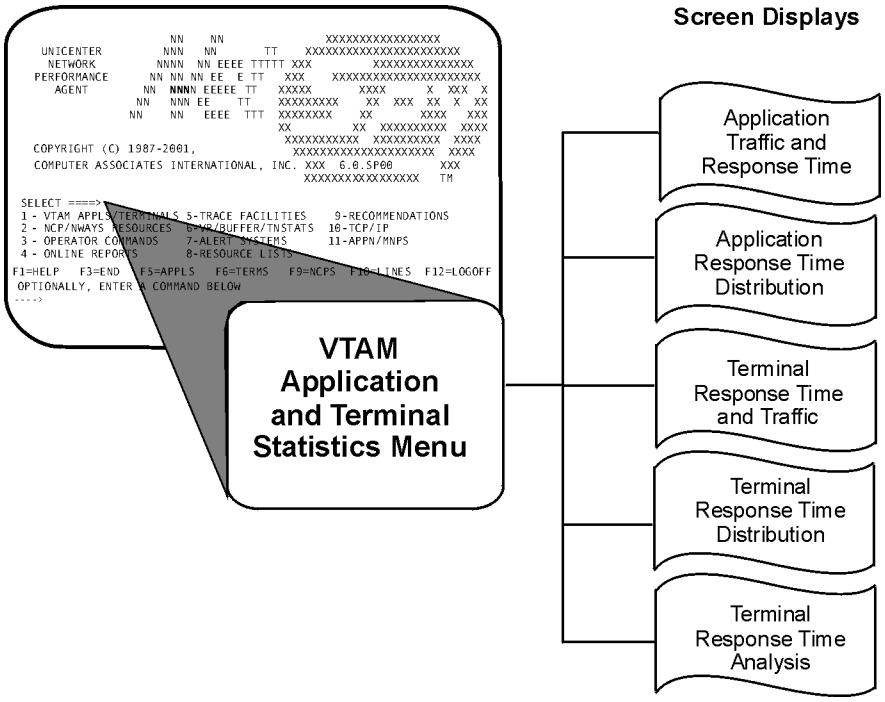

VTAM Application and Terminal Statistics Menu

Select option 1 from the NetSpy main menu to display the following menu, which lets you request specific VTAM statistics.

```
HOST=XAE1
             *** VTAM APPLICATION AND TERMINAL STATISTICS MENU ***

 SELECT AN OPTION
 ====>

 APPLICATION DISPLAYS:              SECONDARY LU, CLUSTER AND LINE DISPLAYS:
   1 - TRAFFIC AND RESPONSE TIME     3 - TRAFFIC AND RESPONSE TIME
   2 - RESPONSE TIME DISTRIBUTION    4 - RESPONSE TIME DISTRIBUTION
                                     5 - RESPONSE TIME ANALYSIS
 FOR ALL OPTIONS:
   DESTINATION NETSPY-TO-NETSPY NAME   ===>
   INTERVAL MODE (I/S/D)               ===>
   LU 6.2 SESSIONS (I/E/O)             ===> I

 FOR 3, 4, AND 5, SPECIFY RESOURCE NAME AND ONE RESPONSE TIME THRESHOLD:
   RESOURCE NAME   =        RESOURCE TYPE  = S (S=SLU/C=CLUSTER/L=LINE)
   FOR APPLICATION =        COMBINED       = N (Y/N, FOR LINE/CLUSTER ONLY)
   AVG HOST RESP   >        AVG NET RESP   >         AVG USER RESP >
   WORST HOST RESP >        WORST NET RESP >


 F1=HELP   F3=END   F5=APPLS   F6=TERMS   F9=NCPS   F10=LINES   F12=LOGOFF
  OPTIONALLY, ENTER A COMMAND BELOW
 ---->
```

How to Access

Access in two ways:

- Select option 1 from the NetSpy Main Menu.
- Enter VDSP from the command line of any screen.

How to Use

Select the number corresponding to the kind of display you want and press Enter, or specify optional parameters for a customized report.

- Options **1** and **2** display application response time statistics for every application that has at least one current session being monitored.
- Options **3, 4,** and **5** display terminal response time statistics for every terminal that has a session with an application monitored by NetSpy.

Optional Parameters for VTAM Applications and Terminals

The table below describes the optional parameters you can specify.

Parameter	Description
LU	Limits any display to one or more secondary logical units (SLUs) by using a specific or generic terminal name, or a specific or generic application name. If you do not specify LU, line, or cluster, then all SLUs having a greater-than-zero transaction count for the current interval will be displayed. You can enter ALL to display all SLUs in session with applications being monitored.
CLUSTER (OR LINE)	Limits the display to terminals associated with the *full cluster or line name* specified, or to each cluster or line matching the *generic name* specified. Note that if you choose option 5 (Response Time Analysis), you cannot specify a generic name for cluster or line. Data from multiple NetSpys is combined.
DESTINATION NETSPY NAME	The name of the NetSpy that you want this NetSpy to communicate with. Name here refers to the *nsyxname* assigned to each NetSpy in its INITPRM. If you do not specify *nsyxname* in the INITPRM, you cannot activate NetSpy-to-NetSpy communication. You can enter: ■ An asterisk (*) for all *nsyxnames* in your network. ■ The *nsyxname* for one NetSpy. ■ A generic name, such as ns*. This notation refers to all *nsyxnames* matching ns*. You can find valid *nsyxname* values on the NetSpy-to-NetSpy Status screen.
INTERVAL MODE	Allows you to request statistics in one of three modes: **I (Interval)** Displays data collected from the beginning of an interval. This mode is the *default*. If you do not specify the mode, NetSpy displays the statistics in interval mode. **S (Summary)** Displays data collected from the start of your

Parameter	Description
	request. The summary mode remains set until you issue another command or press F3. **D (Delta**) Displays data collected since the last time you pressed Enter. The delta mode remains set until you issue another command or press F3. (Certain fields are not displayed in delta mode.)
LU 6.2 SESSIONS	Can have one of the following values: **I** - Displays both LU 6.2 and non-LU 6.2 information. (Default) **E** - Excludes LU 6.2 information from the display. **O** - Displays only information from LU 6.2 sessions.
RESOURCE NAME	Name of the terminal being monitored by NetSpy.
FOR APPLICATION	Limits any terminal display to terminals currently in session with the entered application. You must enter a valid generic application name. When requesting data for lines or clusters, you can enter an asterisk (*) to get a breakdown of the data by application or leave the field blank to get a total value.
COMBINED	Gives you these statistics (for line/cluster only): ■ You specify a full cluster or full line name: – With N (the default), the display shows all terminals associated with the particular cluster or line. – With Y, the display shows the particular cluster or line. ■ You specify a generic cluster or generic line name: – With N (the default), the display shows each cluster or line matching the generic name. – With Y, the display shows a single line with the average for all terminals associated with all clusters or lines matching the generic name.
Response times: Average host, average network, average user, worst host, worst network	Limit any terminal display to show only terminals with a response time exceeding the entered value. (The value is an integer representing tenths of seconds.)

Application Traffic and Response Time Screen

This screen displays traffic and response time statistics for all applications and transaction groups that currently have at least one session being monitored. (Transaction groups are shown only when the display also includes non-LU 6.2 information. This is because the transaction groups are strictly related to real terminal sessions with CA-TPX.)

```
HOST=X001            MEASURED INTERVAL=  3.8M  18JUN1999.169 FRI 11:18:49  ***
                  *** NETSPY RESPONSE TIME STATISTICS (INTERVAL) ***
APPL        AVG-RESP    WORST   NO.   NO.     NO.    NO. INPUT  OUTPUT  OUTPUT
NAME       HOST   NET    HOST  SESS INPUT  OUTPUT NETRESP SIZE   SIZET   SIZEW
----------------------------  NETSPY= X001      ----------------------------
NETSPY32    0.1   0.0     0.6     1     8       8      8     6    1629    1629
TSO32       0.6   0.0     1.7     8     8       9      8     7    1366    1214
----------------------------  NETSPY= X002      ----------------------------
NETSPY28    0.0   0.0     0.4     4    16      16     16     8    1246    1246
TSO28       1.1   0.1     8.8    51    42      68     38    12     470     290
CICSPRD     0.6   0.3     2.2    63   103     133     22    12    1350    1035
 PAYROLL    1.1   0.1     2.0    23    61      62      9    37     796     412
 ACCTING    0.3   0.5     1.7    24    23      48     10    14    1001     426
CICST       0.3   0.2     0.6     2    22      24     20   130    1525    1075


 F1=HELP  F3=END  F5=APPLS  F6=TERMS  F9=NCPS  F10=LINES  F12=LOGOFF
 OPTIONALLY, ENTER A COMMAND BELOW
---->
```

How to Access

Access in any of the following ways:

- Select option 1 from the VTAM Application and Terminal Statistics Menu.
- Enter DA from the command line of any screen. To show applications for all NetSpys, as shown in the above screen, use the following command: DA NETSPY=*.
- Press F5 from any screen.

How to Use

NETSPY= *name* (for example, NETSPY= S028) appears in the line separating each group of applications. The applications under each NETSPY name are monitored by that particular NetSpy. The NETSPY name represents the name specified on the NSYXNAME parameter in each NetSpy's INITPRM. Transaction groups are indented one space, which distinguishes them from VTAM applications.

Application Response Time Distribution Screen

This screen displays response time distributions for all applications and transaction groups being monitored by NetSpy that have completed at least one transaction for the current interval. (Transaction groups are shown only when the display also includes non-LU 6.2 information. This is because the transaction groups are strictly related to real terminal sessions with CA-TPX.)

```
HOST=X001            MEASURED INTERVAL=  5.5M  18JUN1999.169 FRI 11:20:29  ***
                  *** NETSPY RESPONSE TIME STATISTICS (INTERVAL) ***
APPL        AVG-RESP    -------------PERCENT-RESP-ON-TARGET ------------------
NAME       HOST   NET   %MET  VALU  %MET  VALU  %MET  VALU  %MET  VALU   %OVER
----------------------------  NETSPY= X001      ----------------------(USER)
NETSPY32    0.0   0.0   100.   1.0   0.0   1.2   0.0   1.8   0.0   2.0     0.0
TSO32       0.5   0.0   90.0   1.0   8.3   3.0   0.0   5.0   0.0  10.0     1.0
SCON32      0.0   0.0   100.   1.0   0.0   3.0   0.0   5.0   0.0  10.0     0.0
----------------------------  NETSPY= X002      ----------------------(USER)
NETSPY28    0.0   0.0   100.   1.0   0.0   1.2   0.0   1.8   0.0   2.0     0.0
TSO28       1.1   0.1   87.5   1.0   5.3   3.0   4.5   5.0   0.9  10.0     1.0
CICSPRD     1.4   0.3   31.6   2.0  57.9   5.0   5.3  10.0   5.3  30.0     0.0
 PAYROLL    0.4   0.5   31.6   1.0  52.6   3.0  10.5   5.0   5.3  10.0     0.0
 ACCTING    2.4   0.2   76.5   1.0  11.8   3.0   5.9   5.0   0.0  10.0     5.9


 F1=HELP  F3=END  F5=APPLS  F6=TERMS  F9=NCPS  F10=LINES  F12=LOGOFF
 OPTIONALLY, ENTER A COMMAND BELOW
---->
```

How to Access

Access in two ways:

- Choose option 2 from the VTAM Application and Terminal Statistics Menu.
- Enter DAR from the command line of any screen. To show applications for all NetSpys, as shown in the above screen, use the following command: DAR NETSPY=*.

How to Use

NETSPY= *name* (for example, NETSPY= S028) appears in the line separating each group of applications from the next. The applications under each NETSPY name are monitored by that particular NetSpy. The NETSPY name represents the name specified on the NSYXNAME parameter in each NetSpy's INITPRM.

Transaction groups are indented one space, which distinguishes them from VTAM applications.

Terminal Traffic and Response Time Screen

This screen displays all terminals satisfying these conditions:

- The terminal (secondary logical unit) must be in session with an application (primary logical unit) that NetSpy is monitoring.
- This terminal must have a transaction count higher than zero, or you must have entered ALL on the VTAM Application and Terminal Statistics Menu.
- For LU 6.2 sessions, the session must have at least one complete input or output flowing on the session regardless of the EOT parameter for the application, or you must have entered ALL on the VTAM Application and Terminal Statistics Menu.

```
HOST=S032             MEASURED INTERVAL=  9.9M  18JUN1999.169 FRI 11:18:31
***
                   *** NETSPY RESPONSE TIME STATISTICS (INTERVAL) ***
SECONDARY   AVG-RESP    WORST-RESP     NO.      NO.     NO.  OUTPUT  THINK
SESS
LU NAME    HOST   NET   HOST   NET   TRANS.   INPUT  OUTPUT    WAIT   WAIT
TYPE
--- NETSPY=S028      ---  APPL. NAME=NETSPY28  ------------------------------
-
D08L075     0.0   0.0                     5       7       6     0.1        V-
LU
------------------------  APPL. NAME=XCOM28    ------------------------------
-
DSIWR11     1.1   0.1    1.7   0.3        3       3       3           5.2M V-
LU
LU214A0     0.3   0.3    0.7   0.4        5       6       9           4.2M
RT62
D08L008     0.0   0.0    0.1   0.0        6       6       9
D08L007     N/A   N/A    N/A   N/A        2       3      10     N/A    N/A
LU62
D08L006     0.0   0.1    0.1   0.1       10      10      18           6.5M
--- NETSPY=S028      --- APPL. NAME=CICSA      ------------------------------
-
CICST       0.3   0.1    0.5   0.2       51      60      66     0.0
CICST       0.2   0.1    0.4   0.1       55     100     110     0.0
CICSD       0.4   0.1    0.5   0.2       48      50      50     0.0
--- NETSPY=S028      --- APPL. NAME=CICST      ------------------------------
-
CICSA       0.3   0.2    0.3   0.2       20      22      24     0.0    5.3
--- NETSPY=S028      --- APPL. NAME=A13IOTSO      ---------------------------
-
A13TC001    0.0          0.1              2       2       4            1.4M
TCP


 F1=HELP  F3=END  F5=APPLS  F6=TERMS  F9=NCPS  F10=LINES  F12=LOGOFF
 OPTIONALLY, ENTER A COMMAND BELOW
---->
```

Display Notes:

1. If a terminal appears on the display without statistics, NetSpy established the session but no transactions were entered from the terminal. Most likely, you entered ALL on the VTAM Application and Terminal Statistics Menu, or the command DT ALL from the command line of any screen. Both actions cause NetSpy to include all terminals regardless of whether a transaction was initiated for the current interval.

2. On displays showing terminal response time statistics, a "B" appended to the network response time (average, last and worst) indicates that this is a binary synchronous terminal, and NetSpy has used its current VTAM and NCP statistics to calculate the bid-to-poll delay. NetSpy has then added this bid-to-poll delay value to the measured network times.

   Similarly, a "C" appended to the average network time indicates that there were not enough measurements of network time to provide a reliable value, so NetSpy has calculated an average for the current interval based on its VTAM and NCP statistics.

***Parallel Sessions*—**The secondary logical unit (SLU) partner of a session is typically a terminal; however, it can also be an application. When an application has more than one concurrent session with the same session partner, the sessions are referred to as "parallel sessions."

The Terminal Traffic and Response Time screen provides separate lines for each SLU that has a parallel session. In the screen above, the CICSA and CICST applications have three parallel sessions. In two of the sessions, CICSA is the primary logical unit (PLU) and CICST is the secondary logical unit (SLU). In one session, CICST is the PLU and CICSA is the SLU.

***LU 6.2 Sessions*—**In addition to all LU type 2 sessions, NetSpy monitors LU type 6.2 sessions. The SESS TYPE field will show one of two flags:

- "LU62" for sessions whose response time is based on the normal "allocate (attach) and deallocate" protocol.
- "RT62" for sessions that do not follow the "normal" protocol and whose response time is based on "change of direction".

  Note: NetSpy does not collect response time data for LU 6.2 sessions if LU62RESP=NO is specified in the INITPRM member. Consequently, the average, last, and worst host and network response times, as well as the output wait and think wait times will appear on this display as N/A (Not Applicable). See the *NetSpy Administration Guide* for additional information on the LU62RESP parameter.

Note: Network response times are not based on definite response. NetSpy will not force a definite response (see FORCEDR statement in the chapter "Defining Initialization Parameters" of the *NetSpy Administrator Guide*) for LU 6.2 sessions.

How to Access

Access in any of the following ways:

- Choose option 3 from the VTAM Application and Terminal Statistics Menu.
- Enter DT from the command line of any screen.
- Press F6 from any screen.

How to Use

NETSPY= *name* (for example, NETSPY= S028) appears in the line separating each group of terminals from the next. The terminals under each NETSPY name are monitored by that particular NetSpy. The NETSPY name represents the name specified on the NSYXNAME parameter in each NetSpy's INITPRM.

The APPL. NAME in session with the terminals (for example, APPL. NAME=TSO32) appears on the same line as NETSPY= *name*.

Note: If you want to see the TSO user ID for a native TSO session or virtual TSO session (for ESA releases only), or the CA-TPX user ID for a session accessed through the session manager, press the PA2 key. This will display the ID in the SLU NAME field.

Terminal Response Time Distribution Screen

This screen displays the response time distribution for all terminals satisfying these conditions:

- The terminal (secondary logical unit) must currently be in session with an application (primary logical unit) that NetSpy is monitoring.
- The terminal must have a transaction count higher than zero, or you must have entered ALL on the VTAM Application and Terminal Statistics Menu.

Note: If a terminal appears on the display without statistics, NetSpy established the session but no transactions were entered from the terminal. Most likely, you entered ALL on the VTAM Application and Terminal Statistics Menu, or DTR ALL or DTR with a generic terminal name, from the command line of any screen. These actions cause NetSpy to include all terminals regardless of whether a transaction was initiated for the current interval.

```
HOST=S032             MEASURED INTERVAL=  2.7M  18JUN1999.169 FRI 11:20:44
***
                   *** NETSPY RESPONSE TIME STATISTICS (INTERVAL) ***
SECONDARY   AVG-RESP     LAST-RESP  WORST-RESP   PERCENT-RESP-ON-TARGET
LU NAME    HOST   NET   HOST   NET  HOST   NET     1     2     3     4   %OVER
--- NETSPY=S032---------  APPL. NAME=NETSPY32  --  1.0-  1.2-  1.8-  2.0-
(USER)
TPXPUN06    0.1   0.0                0.6   0.3    100.   0.0   0.0   0.0   0.0
-----------------------  APPL. NAME=TSO32     --  1.0-  3.0-  5.0- 10.0-
(HOST)
TPXP005     0.3   0.0    1.0   0.0   1.4   0.3    93.0   7.0   0.0   0.0   0.0
TPXP003     1.1   0.1    1.7   0.3   1.7   0.3    66.7  33.3   0.0   0.0   0.0
TPXP002     0.3   0.0    0.0   0.1   1.3   0.1    88.9  11.1   0.0   0.0   0.0
TPXP006     1.3   0.0    0.1   0.0  11.5   0.1    88.9   0.0   0.0   0.0  11.1
-----------------------  APPL. NAME=SCON32    --  1.0-  3.0-  5.0- 10.0-
(USER)
TPXP001     0.0   0.0    0.0   0.0   0.0   0.0    100.   0.0   0.0   0.0   0.0
TPXP008     0.0   0.0    0.0   0.0   0.1   0.0
TPXP007     0.0   0.0    0.0   0.0   0.0   0.0
TPXP006     0.1   0.0    0.0   0.0   0.8   0.1    100.   0.0   0.0   0.0   0.0
--- NETSPY=S028      ---  APPL. NAME=TSO28     --  1.0-  3.0-  5.0- 10.0-
(HOST)
D28LB1E     0.0   0.1    0.1   0.1   0.1   0.3    100.   0.0   0.0   0.0   0.0
TPXP011     0.1   0.0    0.0   0.1   0.7   0.7    100.   0.0   0.0   0.0   0.0
TPXI013     0.1   0.0    0.0   0.0   0.7   0.4    100.   0.0   0.0   0.0   0.0

F1=HELP  F3=END  F5=APPLS  F6=TERMS  F9=NCPS  F10=LINES  F12=LOGOFF
OPTIONALLY, ENTER A COMMAND BELOW
---->
```

How to Access

Access in two ways:

- Choose option 4 from the VTAM Application and Terminal Statistics Menu.
- Enter DTR from the command line of any screen.

How to Use

NETSPY= *name* (for example, NETSPY= S032) appears in the line separating each group of terminals from the next. The terminals under each NETSPY name are monitored by that particular NetSpy. The NETSPY name represents the name specified on the NSYXNAME parameter in each NetSpy's INITPRM.

The APPL. NAME in session with the terminals (for example, APPL. NAME=TSO32) appears in the same line as the NETSPY name.

Note: If you want to see the TSO user ID for a native TSO session or the CA-TPX user ID for a session accessed through the session manager, press the PA2 key. This will display the ID in the SLU NAME field.

Terminal Response Time Analysis Screen

This screen displays terminal response times, response time distributions, and traffic rates for a terminal that has a session with an application being monitored by NetSpy. Also, it displays application design issues and, if they are available, NCP statistics for the terminal.

Note: If you are collecting calculated response times, the following line will be displayed at the bottom of the screen:

```
NET DELAYS: BTP= IXT= FEP= WOT= OXT= TOT=
```

See the appendix entitled "**Report and Display Headings**" for an explanation of the field headers in this line.

```
HOST=S032              MEASURED INTERVAL=  1.9M  28JUN1999.179 MON 15:19:54
***
NETID=CA
                 *** NETSPY TERMINAL RESPONSE TIME ANALYSIS (INTERVAL) ***

SLU NAME= D28LB1E   APPLICATION= TSO28      VIRTUAL SESSION   NETSPY= S028

 AVG-RESP     LAST-RESP  WORST-RESP   PERCENT-RESP-ON-TARGET (USER)    NO.
HOST   NET   HOST   NET  HOST   NET    1.0   1.2   1.8   2.0 %OVER   TRANS
 0.0   0.1    0.1   0.2   0.1   0.3   100.   0.0   0.0   0.0   0.0      35

  NO.    NO.     NO. INPUT  OUTPUT   OUTPUT  SUB-  VR  OUTPUT  THINK  ENCR
INPUT OUTPUT NETRESP  SIZE   SIZET    SIZEW  AREA        WAIT   WAIT
   16     27      10     8      46       27     8         0.1           NO

APPL. ISSUES:   NULL WRITES ISSUED/ DR NOT LAST WRITE/

NAME     UTL MSGI/M MSGO/M BYTEI/S BYTEO/S POLL/M PPOLL% OQLN ERRS RMSG% RBYT%
LNE16054  30    325    344    1751    2178      8     12    3   13    10    12
PU16054A  17    122    125     855     799      5     15

 F1=HELP  F3=END  F5=APPLS  F6=TERMS  F9=NCPS  F10=LINES  F12=LOGOFF
 OPTIONALLY, ENTER A COMMAND BELOW
---->
```

See the appendix "**Report and Display Headings**" for a description of the fields on this display.

How to Access

Access in two ways:

- Choose option 5 from the VTAM Application and Terminal Statistics Menu.
- Enter DTA from the command line of any screen.

How to Use

The name of the NetSpy that is monitoring this particular terminal appears in the same line with SLU NAME. For example, this terminal (SLU NAME= D28LBIE) is monitored by NETSPY= S028. The NETSPY name represents the name specified on the NSYXNAME parameter in each NetSpy's INITPRM. The Response Time Analysis screen can display line and cluster statistics related to a specific LU if either item 1 or 2 below is true:

1. Your copy of NetSpy is in session with the NPALU.
2. These three conditions are met:
   - You defined the NCP or line or cluster to NetSpy.
   - You specified the NetSpy-to-NetSpy COLLECT POLLSTAT statement in the STARTPRM to tell NetSpy where to obtain the information.
   - You specified the NETSPY parameter either on the VTAM Application and Terminal Statistics Menu or on the command line of a screen.

If you want to see the TSO user ID for a native TSO session or the CA-TPX user ID for a session accessed through the session manager, press the PA2 key. This will display the ID in the SLU NAME field.

Viewing NCP Statistics

To view NCP statistics, you begin with the NCP Statistics Selection Menu. From this menu, you choose NCP/Nways, NTRI, X.25, Ethernet, Frame Relay, or TIC3 resources. After you press the Enter key, you receive a menu relating to your choice on which you can specify parameters for displaying the desired statistics. All these Selection Criteria menus have common parameters for specifying node, scope, and so on, which are explained in Specifying Optional Parameters on Selection Criteria Menus.

This chapter contains an example of each screen and explanations of the parameters that you can specify. See the appendix entitled "Report and Display Headings" for an alphabetical listing of column headings and explanations.

Menus and Displays

The following illustration shows the NCP Statistics Selection Menu, and the submenus for displaying various types of NCP resource data.

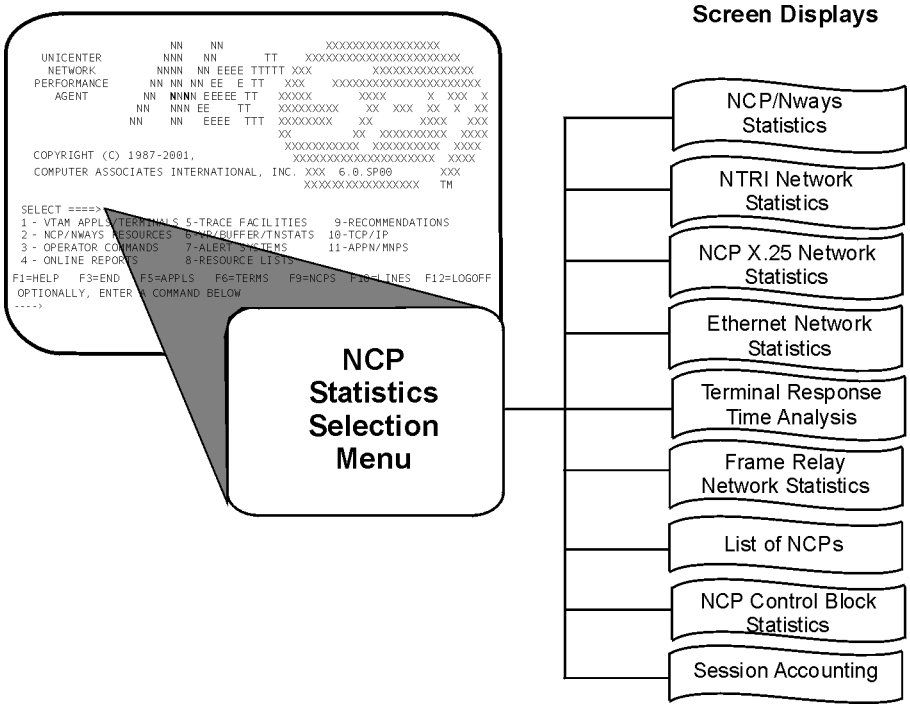

NCP Statistics Selection Menu

Select option 2 from the NetSpy main menu to display the following menu, which lets you access the following menus or displays:

Option 1 NCP/Nways Statistics Selection Criteria menu

Option 2 NTRI Resource Statistics Selection Criteria menu

Option 3 NCP X.25 Statistics Selection Criteria menu

Option 4 Ethernet Statistics Selection Criteria menu

Option 5 Frame Relay Statistics Selection Criteria menu

Option 6 TIC3 Resource Statistics Selection Criteria menu

Option 7 NetSpy Defined NCP List display

Option 8 NCP Control Block Statistics Selection Criteria menu

Option 9 NCP Network Accounting display

```
HOST=NTN1
                  *** NCP STATISTICS SELECTION MENU ***

 SELECT AN OPTION
 ====>

   1 - NCP/NWAYS    LINES, PHYSICAL UNITS, LOGICAL UNITS
   2 - NTRI         TOKEN RING
   3 - X.25         NPSI, XI
   4 - ETHERNET     ETHERNET ADAPTER SUBSYSTEM
   5 - FRAME RELAY  PHYSICAL AND LOGICAL LINKS, LMI, AND FRSE STATIONS
   6 - TIC3         CSS TOKEN RING

   7 - NCP LIST
   8 - CONTROL BLOCKS
   9 - NETWORK ACCOUNTING


F1=HELP   F3=END   F5=APPLS   F6=TERMS   F9=NCPS   F10=LINES   F12=LOGOFF
OPTIONALLY, ENTER A COMMAND BELOW
  ---->
```

How to Access — Choose option 2 from the NetSpy Main Menu.

How to Use — Choose an option and press Enter.

Specifying Optional Parameters on Selection Criteria Menus

Many of the options on the NCP Statistics Selection Menu will display a Selection Criteria Menu (one is partially depicted below) for the chosen resources. Several input fields, common to all the Selection Criteria Menus, are explained below.

```
HOST=NTN1
          *** NTRI RESOURCE STATISTICS SELECTION CRITERIA ***

     SPECIFY OPTIONAL PARAMETERS:

         NODE NAME OR *                        ===> *
         SCOPE  (NTRIS/LLINKS/PLINKS/ONLY/ALL) ===> NTRIS
         DESTINATION NETSPY-TO-NETSPY NAME     ===>
         INTERVAL MODE  (I/S/D)                ===>
```

Parameter	Description
NODE NAME	Indicates the NCP resource for which you want statistics. You must enter it as either an asterisk (*) indicating all nodes, a valid NCP resource name (NCP, line, cluster, or terminal), or a generic name. RLISTs are not valid here. If you enter a name, NetSpy sends a data collection request for that specific NCP resource and the corresponding scope. If you enter an asterisk, NetSpy displays all resources already being monitored that satisfy the scope and any other selection criteria. If you do not specify a name or asterisk after node name, NetSpy defaults to all NCPs that have been defined and uses the SCOPE=ONLY parameter.
SCOPE	Can have the following values and others depending on the chosen resource: **ONLY** - (Default) Displays only the resource matching the node name. **ALL** - Displays all resources.
DESTINATION NETSPY-TO-NETSPY NAME	The name of the NetSpy that you want this NetSpy to communicate with. Name here refers to the *nsyxname* assigned to each NetSpy in INITPRM. If you do not specify *nsyxname*, you cannot activate NetSpy-to-NetSpy communication. You can enter: ■ An asterisk (*) for all *nsyxnames* in your network. ■ The *nsyxname* for one NetSpy. ■ A generic name, such as ns*. This notation refers to all *nsyxname* matching ns*. You can find valid *nsyxname* values on the NetSpy-to-NetSpy Status screen.

Parameter	Description
INTERVAL MODE	Allows you to request statistics in one of three modes: **I (Interval)** Displays data collected from the beginning of an interval. This mode is the *default*. If you do not specify the mode, NetSpy displays the statistics in interval mode. **S (Summary)** Displays data collected from the start of your request. The summary mode remains set until you issue another command or press F3. **D (Delta)** Displays data collected since the last time you pressed Enter. The delta mode remains set until you issue another command or press F3.

NCP/NWays Statistics Menu

This menu lets you request specific NCP statistics.

```
HOST=NTN1
                 *** NCP/NWAYS STATISTICS SELECTION CRITERIA ***

      SPECIFY OPTIONAL PARAMETERS:

          NODE NAME OR *                        ===> *
          SCOPE  (ONLY/NCPS/LINES/PUS/LUS/ALL) ===> ONLY
          DESTINATION NETSPY-TO-NETSPY NAME    ===>
          INTERVAL MODE  (D/S/I)               ===>
          DISPLAY MODE  (NORMAL/TP)            ===> NORMAL

          TO FILTER DISPLAYED RESOURCES, SPECIFY A THRESHOLD VALUE BELOW:

          LINE UTILIZATION          >
          MESSAGES/MINUTE           >
          ERRORS ON LINE OR CLUSTER >
          OUTBOUND QUEUE LENGTH     >

F1=HELP  F3=END  F5=APPLS  F6=TERMS  F9=NCPS  F10=LINES  F12=LOGOFF
OPTIONALLY, ENTER A COMMAND BELOW
 ---->
```

How to Access

Do one of the following:

- Choose option 2 from the NetSpy Main Menu. Then, on the NCP Statistics Selection Menu, choose option 1.
- Enter NDSP from the command line of any screen.

How to Use

Press Enter to request all NCP statistics or specify optional parameters to limit the display.

You can reach the following displays from this menu:

Name of Display	How to Access
NCP Network Statistics	Specify any of the options *not* mentioned below.
NCP Statistics (Major Nodes)	Specify SCOPE=NCPS or specify SCOPE=ONLY with NODENAME=*name matching NCP major nodes*.
Transmission Priority Statistics	Specify DISPLAY MODE=TP.

Optional Parameters for NCP Statistics

Parameter	Description
NODE NAME	See explanation under Specifying Optional Parameters on Selection Criteria Menus.
SCOPE	Can have the following values: **ONLY** - (Default) Displays only the resource matching the node name **LINES** - Displays lines only **PUS** - Displays physical units only **LUS** - Displays secondary logical units only **ALL** - Displays all resources **NCPS** - Displays NCP major nodes only
DESTINATION N-T-N NAME	See explanation under Specifying Optional Parameters on Selection Criteria Menus.
INTERVAL MODE	See explanation under Specifying Optional Parameters on Selection Criteria Menus.
DISPLAY MODE	Can have the following values: **NORMAL** - Displays the statistics screens in "normal" mode. **TP** - Displays the transmission priority statistics screen. **Note:** TP data is available only for resources specified in the NCP generation.

Parameter	Description
LINE UTILIZATION	Displays only lines with primary or secondary utilization greater than the value you enter.
MESSAGES PER MINUTE	Displays only resources having a traffic rate greater than the value you enter.
ERRORS ON LINE OR CLUSTER	Displays only clusters or lines having an error count greater than the value you enter.
OUTBOUND QUEUE LENGTH	Displays only resources having an outbound queue length greater than the value you enter.

NCP Statistics Screen

This screen displays statistics for NCP major nodes.

```
HOST=S008                                    10JUN1999.160 THU  9:26:12 ***

                    *** NETSPY NCP STATISTICS (INTERVAL) ***

NAME     INTERVAL  CCU      %FREE BUFFERS     LOW FREE  CIQ     CHQ     TIME IN
                   UTIL  CURRENT  HIGH  LOW    BUFFERS  LENGTH  LENGTH  SLOWDOWN
-------------------------------NCP = N13D5C0 -----------------------------------
N139403  11.0M        8       96    99    93      1495       1       4       0.0
-------------------------------NCP = N059005 -----------------------------------
N059409  11.0M       27       99    99    97     13270       1       2       0.0
-------------------------------NWAY= D27N007 -----------------------------------
D279512   4.0M        2       98    98    98     10806               1       0.0

 F1=HELP  F3=END  F5=APPLS  F6=TERMS  F9=NCPS  F10=LINES  F12=LOGOFF
 OPTIONALLY, ENTER A COMMAND BELOW
```

How to Access

Do one of the following:

- Choose to display NCP major node data from the NCP Statistics Selection Menu.
- Enter DN from the command line of any screen.
- Press F9 from any screen.

NCP Network Statistics Screen

This screen displays statistics for all NCP resources, BSC, CA, SDLC, ESCON, and CLA.

```
HOST=NTN1                                    31AUG1999.242 TUE 10:40:09 ***

           *** NETSPY NCP NETWORK STATISTICS (INTERVAL) ***

NAME                 PRI  SEC   MSGS BYTES  POLLS   %POS   OUT  ERROR -
RETRANS-
         TYPE  INTVL LINE LINE  /MIN  /SEC   /MIN  POLLS  QLEN  COUNT  %MSG
%BYT
-------- NETSPY = NSKBNTN1  ---------- NCP = N26Z3F0 ------------------------
ESCLINE  ESCON  9.5M    0    0     0     0      0      0
ESCPU    ESCON  9.5M    0    0     0     0      0      0
CLALINE  CLA    9.5M    0    0     0     1      0      0    27     3    2   3
CLAPU    CLA    9.5M    0    0     0     1      0      0    17
SDLCLINE SDLC   9.5M    8    1    16   109     44     15     4
SDLCPU   SDLC   9.5M    8    1    16   109     44     15     1
CALINE   CA     9.5M  N/A  N/A     0     1      0      0     3
CAPU     CA     9.5M  N/A  N/A     0     1      0      0     5
BSCLINE  BSC    9.5M

 F1=HELP  F3=END  F5=APPLS  F6=TERMS  F9=NCPS  F10=LINES  F12=LOGOFF
 OPTIONALLY, ENTER A COMMAND BELOW
---->
```

How to Access

Do one of the following:

- Choose the resources you want NetSpy to report on from the NCP Statistics Selection Menu.
- Enter any of the following commands on the command line of any screen:
  - DN SCOPE=LINES
  - DN SCOPE=PUS
  - DN SCOPE=LUS
  - DN SCOPE=ALL
- Press F10 from any screen.

How to Use

If data from NetSpy-to-NetSpy sessions is being reported, the NETSPY name appears on the screen, with the data below it, and the NCP name follows the NETSPY name. For example:

```
-------NETSPY=NSKBNTN1-----------NCP = N13D5CO
```

The NETSPY name represents the name specified on the NSYXNAME parameter in each NetSpy's INITPRM.

Note: Messages, as referred to in this section, are defined as follows:

- For SDLC lines and clusters, a message is a Path Information Unit (PIU) or PIU segment.
- For SDLC LUs, a message is a PIU (before segmentation).
- For BSC, a message is a PIU.

Transmission Priority Statistics Screen

This screen displays transmission priority statistics for NCP resources.

```
HOST=S032                                    31AUG1999.242 TUE 10:40:20 ***
           *** NETSPY TRANSMISSION PRIORITY STATISTICS (INTERVAL) ***
                            HIGH                MEDIUM                LOW
NAME     TYPE  INTVL MSGS/MIN BYTES/SEC  MSGS/MIN BYTES/SEC  MSGS/MIN
BYTES/SEC
--------------------------------- NCP = N119408 -----------------------------
-
L1300    ESCON  9.5M       20        78         4        23       114
143
P13SW0   CLA    9.5M        0         0        33        64        68
95
L1301    SDLC   9.5M      143       178         0         0         0
0
P13SW1   SDLC   9.5M        0         0         0         0         2
27
L1304    SDLC   9.5M        8        16       109       144        15
44
P13SW4   CLA    9.5M       68       116        29        44         5
14
L1308    CA     9.5M        0         0         0         0         0
0
P13SW8   ESCON  9.5M        0         0        51        80         0
0
 F1=HELP  F3=END  F5=APPLS  F6=TERMS  F9=NCPS  F10=LINES  F12=LOGOFF
 OPTIONALLY, ENTER A COMMAND BELOW
---->
```

How to Access

Do one of the following:

- Choose the resources you want NetSpy to report on from the NCP Statistics Selection Menu, with a DISPLAY MODE of TP.
- Enter any of the following commands on the command line of any screen:
  - DN SCOPE=LINES TP
  - DN SCOPE=PUS TP
  - DN SCOPE=LUS TP
  - DN SCOPE=ALL TP

NTRI Resource Statistics Selection Criteria Menu

This menu lets you request specific NTRI statistics.

```
HOST=NTN1

          *** NTRI RESOURCE STATISTICS SELECTION CRITERIA ***

     SPECIFY OPTIONAL PARAMETERS:

         NODE NAME OR *                        ===> *
         SCOPE  (NTRIS/LLINKS/PLINKS/ONLY/ALL) ===> NTRIS
         DESTINATION NETSPY-TO-NETSPY NAME     ===>
         INTERVAL MODE  (I/S/D)                ===>

         TO FILTER DISPLAYED RESOURCES, SPECIFY A THRESHOLD VALUE BELOW:

         OUTPUT QUEUE LENGTH  >         TIC UTILIZATION     >
         I-FRAMES/MIN         >         BYTES/SECOND        >
         TIME OUTS            >         RETRANSMITTED BYTES >
         RETRANSMITTED FRAMES >         CONGESTION COUNT    >
         ACTIVE CONNECTIONS   >

F1=HELP  F3=END  F5=APPLS  F6=TERMS  F9=NCPS  F10=LINES  F12=LOGOFF
OPTIONALLY, ENTER A COMMAND BELOW
---->
```

How to Access

Choose option 2 from the NetSpy Main Menu. Then, on the NCP Statistics Selection Menu, choose option 2.

How to Use

Press Enter to request all NTRI statistics or specify optional parameters to limit the display and then press Enter.

Optional Parameters for NTRI Statistics

Parameter	Description
NODE NAME	See explanation under Specifying Optional Parameters on Selection Criteria Menus.
SCOPE	Can have the following values: **NTRIS** - Displays data for all token ring (TIC) resources (Default) **LLINKS** - Displays data for logical links on token ring (TIC) resources **PLINKS** - Displays data for physical links on token ring (TIC) resources **ONLY** - Displays data for one token ring (TIC) resource **ALL** - Displays data for all token ring (TIC) resources
DESTINATION N-T-N NAME	See explanation under Specifying Optional Parameters on Selection Criteria Menus.

Parameter	Description
INTERVAL MODE	See explanation under Specifying Optional Parameters on Selection Criteria Menus.
OUTPUT QUEUE LENGTH	Displays data on NTRI resources that have an output queue length greater than the number you specify.
I-FRAMES/MIN	Displays data on NTRI resources that transfer more I-frames per minute than the number you specify.
TIME OUTS	Displays data on LLINKs for which more timeouts have occurred during the interval than the number you specify. Valid with LLINKs only.
RETRANSMITTED FRAMES	Displays data on NTRI resources that have retransmitted more I-frames than the number you specify.
ACTIVE CONNECTIONS	Displays data on NTRI resources that have more active connections than the number you specify. Valid with PLINKs only.
TIC UTILIZATION	Displays data on NTRI resources that utilized a greater percentage of the TIC (token interface coupler) during the interval than the number you specify. Valid with PLINKs only.
BYTES/SECOND	Displays data on NTRI resources that send/receive more bytes per second than the number you specify.
RETRANSMITTED BYTES	Displays data on NTRI resources that have retransmitted more bytes than the number you specify.
CONGESTION COUNT	Displays data on NTRI resources that have a congestion count greater than the number you specify. Valid with PLINKs only.

NTRI Network Statistics Screen

This screen displays NTRI network statistics.

```
HOST=S028                                    28JUN1999.179 MON 14:10:30 ***

                     *** NETSPY NTRI NETWORK STATISTICS ***
                       TIC   IFRMS   BYTES TIME     RETRANSMIT         CONG
ACT
NAME     TYPE  INTVL UTIL%   /MIN    /SEC OUTS   IFRAMS   BYTES OQLEN  CNT
CONN
------------------------------------------- NCP = N119104  -------------------
-
L111092  PLINK  10.0    0      66     171            0       0     0    0
2
L111093  PLINK  10.0    0       0       0            0       0     0    0
0
J000B001 LLINK  10.0            0       0    0       0       0     0
J000B003 LLINK  10.0            0       0    0       0       0     0
J000B005 LLINK  10.0            0       0    0       0       0     0
J000B007 LLINK  10.0            0       0    0       0       0     0
J000B009 LLINK  10.0            0       0    0       0       0     0
J000B00B LLINK  10.0            0       0    0       0       0     0
J000B00D LLINK  10.0           66     150    0       0       0     0
J000B00F LLINK  10.0            0       0    0       0       0     0
J000B011 LLINK  10.0            0       0    0       0       0     0
J000B013 LLINK  10.0            0       0    0       0       0     0
J000B015 LLINK  10.0            0       0    0       0       0     0
J000B017 LLINK  10.0            0       0    0       0       0     0
J000B019 LLINK  10.0            0       0    0       0       0     0
J000B01B LLINK  10.0            0       0    0       0       0     0

F1=HELP  F3=END  F5=APPLS  F6=TERMS  F9=NCPS  F10=LINES  F12=LOGOFF
OPTIONALLY, ENTER A COMMAND BELOW
---->
```

How to Access

Do either of the following:

- Choose to display NTRI resource data from the NTRI Resource Statistics Criteria Menu.
- Enter DNTR from the command line of any screen.

TIC3 Resource Statistics Selection Criteria Menu

This menu lets you request specific TIC3 statistics.

```
HOST=NS42
             *** TIC3 RESOURCE STATISTICS SELECTION CRITERIA ***

     SPECIFY OPTIONAL PARAMETERS:

         NODE NAME OR *                              ===> *
         SCOPE  (TIC3LINK/TIC3PU/TIC3ALL/ONLY/ALL)   ===> ALL
         DESTINATION NETSPY-TO-NETSPY NAME           ===>
         INTERVAL MODE  (I/S/D)                      ===>

         TO FILTER DISPLAYED RESOURCES, SPECIFY A THRESHOLD VALUE:

         UTILIZATION %        >          BYTES/SECOND        >
         I-FRAMES/MINUTE      >          ERROR FRAMES        >
         RETRANSMITTED FRAMES >          RETRANSMITTED BYTES >
         TIMEOUTS             >

F1=HELP  F3=END  F5=APPLS  F6=TERMS  F9=NCPS  F10=LINES  F12=LOGOFF
OPTIONALLY, ENTER A COMMAND BELOW
---->
```

How to Access

Do one of the following:

- Choose option 2 from the NetSpy Main Menu. Then, on the NCP Statistics Selection Menu, choose option 6.
- Enter DNTIC3M from the command line of any screen.

How to Use

Press Enter to request all TIC3 statistics or specify optional parameters to limit the display and then press Enter.

Optional Parameters for TIC3 Statistics

Parameter	Description
NODE NAME	See explanation under Specifying Optional Parameters on Selection Criteria Menus.
SCOPE	Can have the following values: **TIC3LINK** - Displays data for physical links on TIC3 resources (Default) **TIC3PU** - Displays data for logical PUs on TIC3 resources **TIC3ALL** - Displays data for all TIC3 resources **ONLY** - Displays data for one TIC3 resource **ALL** - Displays data for all TIC3 resources
DESTINATION N-T-N NAME	See explanation under Specifying Optional Parameters on Selection Criteria Menus.

Parameter	Description
INTERVAL MODE	See explanation under Specifying Optional Parameters on Selection Criteria Menus.
UTILIZATION %	Displays data on TIC3 resources that utilized a greater percentage of the TIC than the number you specify.
I-FRAMES/MIN	Displays data on TIC3 resources that transfer more I-frames per minute than the number you specify.
RETRANSMITTED FRAMES	Displays data on TIC3 resources that have retransmitted more I-frames than the number you specify.
TIMEOUTS	Displays data on TIC3PUs for which more LAN T2 timeouts have occurred during the interval than the number you specify. Valid with TIC3PU only.
BYTES/SECOND	Displays data on TIC3 resources that send/receive more bytes per second than the number you specify.
ERROR FRAMES	Displays data on TIC3 resources that have more error frames than the number you specify. For TIC3LINK, error frames is the sum of misaddressed, discarded, and unrecognized frames. For TIC3PU, error frames is the number of rejected frames sent and received.
RETRANSMITTED BYTES	Displays data on TIC3 resources that have retransmitted more bytes than the number you specify.

TIC3 Network Statistics Screen

This screen displays TIC3 network statistics.

```
HOST=XAE1                                    25SEP2000.269 MON 22:41:49 ***
               *** NETSPY TIC3 NETWORK STATISTICS (SUMMARY) ***
                                 IFRMS   BYTES  --RETRANSMIT--  TIME  ERROR
 NAME     TYPE   INTVL  UTIL%    /MIN    /SEC  FRAMES   BYTES  OUTS  FRAME
------------------------------------------ NCP = N059412  ----------------
LT1C3LN  TIC3LINK  3.5M   4.52     50    123      1      23              5
PTIC3PU  TIC3PU    4.6M   9.35     25     89      2     103      3       2


  F1=HELP   F3=END   F5=APPLS   F6=TERMS   F9=NCPS   F10=LINES   F12=LOGOFF
  OPTIONALLY, ENTER A COMMAND BELOW
  ---->
```

How to Access

Do one of the following:

- Choose option 2 from the NetSpy Main Menu. Then, on the NCP Statistics Selection Menu, choose option 6.
- Enter DNTIC3 from the command line of any screen.

How to Use

TIC3 statistics will not necessarily be refreshed when you press F2 or Enter, since the NCP sends TIC3 statistics to NetSpy on an unsolicited basis. For all other NCP resources, the NCP forwards statistics to NetSpy on an "as requested" basis.

NCP X.25 Resource Statistics Menu

This menu lets you request specific NCP X.25 statistics.

```
HOST=NS42
               *** NCP X.25 STATISTICS SELECTION CRITERIA ***

     SPECIFY OPTIONAL PARAMETERS:

          NODE NAME OR *                          ===> *
          SCOPE  (X25STATS/X25LINES/X25PUS/
                  X25VCS/X25LUS/X25ALL/ONLY/ALL) ===> X25STATS
          DESTINATION NETSPY-TO-NETSPY NAME       ===>
          INTERVAL MODE  (I/S/D)                  ===>

          TO FILTER DISPLAYED RESOURCES, SPECIFY A THRESHOLD VALUE BELOW:

          LINE UTILIZATION      >
          I-FRAMES PER MINUTE   >
          PACKETS PER MINUTE    >
          OUTBOUND QUEUE LENGTH >

F1=HELP  F3=END  F5=APPLS  F6=TERMS  F9=NCPS  F10=LINES  F12=LOGOFF
OPTIONALLY, ENTER A COMMAND BELOW
---->
```

How to Access

Do either of the following:

- Choose option 2 from the NetSpy Main Menu. Then, on the NCP Statistics Selection Menu, choose option 3.
- Enter DNX25M from the command line of any screen.

How to Use

Press Enter to request all X.25 MCH line, MCH PU, and VC statistics or specify optional parameters to limit the display and then press Enter.

Optional Parameters for NCP X.25 Statistics

Parameter	Description
NODE NAME	See explanation under Specifying Optional Parameters on Selection Criteria Menus.
SCOPE	Can have the following values: **X25STATS** - (Default) Displays X.25 MCH lines, X.25 MCH physical units, and X.25 virtual circuits. **ONLY** - Displays only the resource matching the node name. **X25LINES** - Displays X.25 multi-channel (MCH) lines only. **X25PUS** - Displays X.25 MCH physical units only. **X25VCS** - Displays X.25 virtual circuits (VCs) only. **X25LUS** - Displays X.25 terminals only. **X25ALL** - Displays all X.25 resources. **ALL** - Displays all X.25 resources.
DESTINATION N-T-N NAME	See explanation under Specifying Optional Parameters on Selection Criteria Menus.
INTERVAL MODE	See explanation under Specifying Optional Parameters on Selection Criteria Menus.
LINE UTILIZATION	Displays only X.25 MCH lines with utilizations greater than the value you enter. Valid only with scopes of X25LINES, X25ALL, ALL, and ONLY.
I-FRAMES PER MINUTE	Displays only X.25 MCH lines that have an "information frames per minute" rate greater than the value you enter. Valid only with scopes of X25LINES, X25ALL, ALL, and ONLY.
PACKETS PER MINUTE	Displays only X.25 MCH PUs or VCs that have a "packets per minute" rate greater than the value you enter. Valid only with scopes of X25PUS, X25ALL, ALL, and ONLY.
OUTBOUND QUEUE LENGTH	Displays only X.25 MCH lines that have an outbound queue length greater than the value you enter. Valid only with scopes of X25LINES, X25ALL, ALL, and ONLY.

NCP X.25 Network Statistics Screen

This screen displays X.25 network statistics.

```
HOST=NS42                                    28JUN1999.179 MON 15:11:31 ***

  *** NETSPY NCP X.25 (NPSI/XI/ODLC) NETWORK STATISTICS  (INTERVAL) ***

                   LINE UTIL IFR-MSG BYTES PACKETS  OUT    RNR    %RETRANS
#VC
NAME    TYPE INTVL PRI   SEC    /MIN  /SEC    /MIN QLEN SENT RECV IFR  BYT
CONN
---------------------------------------- NCP = N059122  -----------------------
-
NPSILINE  NPSI  5.0M                     0       0
NPSIPU    NPSI  5.0M                     0       0
XILINE    XI    5.0M                     0       0
XIPU      XI    5.0M                    31      22
NPSIVC    NPSI  5.0M                     0       0
ODLCLINE  ODLC  5.0M                     0       0
ODLCPU    ODLC  5.0M                     0       0
ODLCVC    ODLC  5.0M                     0       0


  F1=HELP  F3=END  F5=APPLS  F6=TERMS  F9=NCPS  F10=LINES  F12=LOGOFF
  OPTIONALLY, ENTER A COMMAND BELOW
  ---->
```

How to Access

Do one of the following:

- Choose to display X.25 resource data from the X.25 NCP Statistics Menu.
- Enter DNX25 from the command line of any screen.

Ethernet Resource Statistics Selection Criteria Menu

This menu lets you request specific Ethernet statistics.

```
HOST=S028
             *** ETHERNET STATISTICS SELECTION CRITERIA ***

     SPECIFY OPTIONAL PARAMETERS:

          NODE NAME OR *                    ===> *
          SCOPE  (ETHPLINK/ETHALL/ONLY/ALL) ===> ETHPLINK
          DESTINATION NETSPY-TO-NETSPY NAME ===>
          INTERVAL MODE  (I/S/D)            ===>

          TO FILTER DISPLAYED RESOURCES, SPECIFY A THRESHOLD VALUE BELOW:

          I-FRAMES/MINUTE     >         BYTES/SECOND           >
          CONGESTION COUNT    >         TRANSMISSIONS DEFERRED >
          OUTPUT QUEUE LENGTH >         ONE COLLISION          >
          MULTIPLE COLLISIONS >         DISCARDED IP FRAMES    >

F1=HELP  F3=END  F5=APPLS  F6=TERMS  F9=NCPS  F10=LINES  F12=LOGOFF
OPTIONALLY, ENTER A COMMAND BELOW
---->
```

How to Access

Do one of the following:

- Choose option 2 from the NetSpy Main Menu. Then, on the NCP Statistics Selection Menu, choose option 4.
- Enter DNETHM from the command line of any screen.

How to Use

Press Enter to request all Ethernet statistics, or specify optional parameters to limit the display and then press Enter.

Optional Parameters for Ethernet Statistics

Parameter	Description
NODE NAME	See explanation under Specifying Optional Parameters on Selection Criteria Menus.
SCOPE	Can have the following values: **ETHPLINK** - Displays data for Ethernet physical link resources (default) **ETHALL** - Displays data for all Ethernet resources **ONLY** - Displays data only for the resource matching the node name **ALL** - Displays data for all Ethernet resources
DESTINATION N-T-N NAME	See explanation under Specifying Optional Parameters on Selection Criteria Menus.
INTERVAL MODE	See explanation under Specifying Optional Parameters on Selection Criteria Menus.
I-FRAMES/MIN	Displays data on Ethernet resources that send/receive more I-frames per minute than the number you specify.
CONGESTION COUNT	Displays data on Ethernet resources that have occurrences greater than the number you specify, of frames not copied due to a lack of buffer space available in the Ethernet Transmission Subsystem (ESS).
OUTPUT QUEUE LENGTH	Displays data on Ethernet resources that have output queue length greater than the number you specify.
MULTIPLE COLLISIONS	Displays data on Ethernet resources that have occurrences of more than one collision during the transmission of a frame greater than the number you specify.

Parameter	Description
BYTES/SECOND	Displays data on Ethernet resources that send/receive more bytes per second than the number you specify.
TRANSMISSIONS DEFERRED	Displays data on Ethernet resources that have transmissions deferred greater than the number you specify.
ONE COLLISION	Displays data on Ethernet resources that have occurrences of one collision during the transmission of a frame greater than the number you specify.
DISCARDED IP FRAMES	Displays data on Ethernet resources that have discarded more IP frames than the value you specify.

Ethernet Network Statistics Screen

This screen displays Ethernet network statistics.

```
HOST=S028                                    *** 28JUN1999.179 MON 14:10:30
***

                  *** NETSPY NCP ETHERNET NETWORK STATISTICS ***
                         IFRMS  BYTES  CONGST TRANSMIT       DISCARD -
COLLISIONS-
NAME     TYPE     INTVL  /MIN   /SEC   COUNT DEFERRED OQLEN  FRAMES   ONE
>ONE
------------------------- NCP = N119304  -----------------------------------
--
L111092  ETHPLINK  58.0   200    250       9       14     8       2    21
3
L111093  ETHPLINK  58.0   100    350       7       15     3       1    21
3
-------------------------- NCP = N119307  -----------------------------------
--
L111097  ETHPLINK  58.0  1244   1874      11       25    12       1     8
5


F1=HELP  F3=END  F5=APPLS  F6=TERMS  F9=NCPS  F10=LINES  F12=LOGOFF
OPTIONALLY, ENTER A COMMAND BELOW
  ---->
```

How to Access

Do either of the following:

- Choose to display Ethernet resource data from the Ethernet Statistics Selection Criteria Menu.
- Enter DNETH from the command line of any screen.

Frame Relay Statistics Selection Criteria Menu

This menu lets you request specific Frame Relay statistics.

```
HOST=S028
               *** FRAME RELAY STATISTICS SELECTION CRITERIA ***

     SPECIFY OPTIONAL PARAMETERS:

         NODE NAME OR *                    ===> *
         SCOPE  (FRPLINK/FRLLINK/
                 FRPU/FRALL/ONLY/ALL)      ===> FRPLINK
         DESTINATION NETSPY-TO-NETSPY NAME ===>
         INTERVAL MODE  (I/S/D)            ===>

         TO FILTER DISPLAYED RESOURCES, SPECIFY A THRESHOLD VALUE BELOW:

         I-FRAMES/MINUTE     >       BYTES/SECOND     >
         RETRANSMIT I-FRAMES >       RETRANSMIT BYTES >
         OUTPUT QUEUE LENGTH >       FRAMES DISCARDED >
         CONGESTION FORWARD  >       CONGESTION BACK  >
         LINE UTILIZATION      >


F1=HELP  F3=END  F5=APPLS  F6=TERMS  F9=NCPS  F10=LINES  F12=LOGOFF
OPTIONALLY, ENTER A COMMAND BELOW
---->
```

How to Access

Do one of the following:

- Choose option 2 from the NetSpy Main Menu. Then, on the NCP Statistics Selection Menu, choose option 5.
- Enter DNFRM from the command line of any screen.

How to Use

Press Enter to request all Frame Relay statistics or specify optional parameters to limit the display and then press Enter.

Optional Parameters for Frame Relay Statistics

Parameter	Description
NODE NAME	See explanation under Specifying Optional Parameters on Selection Criteria Menus.
SCOPE	Can have the following values: **FRPLINK** - Displays data for Frame Relay physical link resources (Default) **FRLLINK** - Displays data for Frame Relay logical link resources **FRPU** - Displays data for Frame Relay physical unit resources, which includes LMI stations and Frame Relay switch equipment **FRALL** - Displays data for all Frame Relay resources

Parameter	Description
	ONLY - Displays data only for the resource matching the node name **ALL** - Displays data for all Frame Relay resources
DESTINATION N-T-N NAME	See explanation under Specifying Optional Parameters on Selection Criteria Menus.
INTERVAL MODE	See explanation under Specifying Optional Parameters on Selection Criteria Menus.
I-FRAMES/MIN	Displays data on Frame Relay resources that send/receive more I-frames per minute than the number you specify.
RETRANSMIT I-FRAMES	Displays data on Frame Relay resources that have retransmitted more I-frames per second than the number you specify.
OUTPUT QUEUE LENGTH	Displays data on Frame Relay resources that have an output queue length greater than the number you specify.
CONGESTION FORWARD	Displays data on Frame Relay resources that have I-frame with forward congestion bit set on a count greater than the number you specify.
LINE UTILIZATION	Displays lines with primary and secondary utilization percentages greater than the value you specify. Valid for FRPLINKs only.
BYTES/SECOND	Displays data on Frame Relay resources that send/receive more bytes per second than the number you specify.
RETRANSMIT BYTES	Displays data on Frame Relay resources that have retransmitted more bytes per second than the number you specify.
FRAMES DISCARDED	Displays data on Frame Relay resources that have I-frame discard counts greater than the number you specify.
CONGESTION BACK	Displays data on Frame Relay resources that have I-frame with backward congestion bit set on a count greater than the number you specify.

Frame Relay Network Statistics Screen

This screen displays Frame Relay network statistics.

```
HOST=S028                                        28JUN1999.179 MON 14:10:30 ***

                 *** NETSPY FRAME RELAY NETWORK STATISTICS ***

                        UTIL%  IFRMS  BYTES  RETRANSMITS       CONGESTION  FRMS
NAME     TYPE    INTVL  PR SEC  /MIN   /SEC  IFRMS BYTES OQLEN FORWD  BACK DSCD
-------------------------------------NCP = N119304  ----------------------------
L11200   FRPLINK  58.0  15  11   250   1250     9   236      5     1    1     1
L11200A  FRLLINK  58.0           292   1506     8   222      5     1    1
L11200B  FRLLINK  58.0            88    997     0     0      0     0    0
-------------------------------------NCP = N119305  ----------------------------
L11300   FRPLINK  58.0  20 14   1944   4874    46   1141     6     5    1     4
L11300PF FRLMI    58.0            50    875                  0                 0
L11300A  FRLLINK  58.0          2223   4909    18    449     4     5    1
L11300Z  FRLLINK  58.0           950   3875    28    692     2     0    0

F1=HELP  F3=END  F5=APPLS  F6=TERMS  F9=NCPS  F10=LINES  F12=LOGOFF
OPTIONALLY, ENTER A COMMAND BELOW
---->
```

How to Access

Do either of the following:

- Choose to display Frame Relay resource data from the Frame Relay Statistics Selection Criteria menu.
- Enter DNFR from the command line of any screen.

NCP List Screen

This screen displays version, generation date and time, and other information about all NCPs known to NetSpy.

```
HOST=IPOX                                   25MAY1999.144 TUE  9:06:20 ***

                       *** NETSPY DEFINED NCP LIST ***

NAME          VERSION      GEN DATE AND TIME        STATUS       NPA LU
N059408       V6R2         03/11/99 08:41:40        DEFINED      N/A
N059407       V6R3F        02/23/99 15:23:01        ACQUIRED     NAP05LU
N139403       V5R4         USER_CORRELATOR          ACQUIRED     NPA13LU2
NW10001       NWAYS        N/A                      DEFINED      NPWYS001

F1=HELP  F3=END  F5=APPLS  F6=TERMS  F9=NCPS  F10=LINES  F12=LOGOFF
OPTIONALLY, ENTER A COMMAND BELOW
---->
```

How to Access

Do one of the following:

- Choose option 2 from the NetSpy Main Menu. Then, on the NCP Statistics Selection Menu, choose option 7.
- Enter DNLIST from the command line of any screen.

NCP Control Block Pool Statistics Selection Criteria Menu

This menu lets you request specific NCP control block statistics.

```
HOST=NTN1

          *** NCP CONTROL BLOCK POOL STATISTICS SELECTION CRITERIA ***

     SPECIFY OPTIONAL PARAMETERS:

         NCP MAJOR NODE NAME OR *   ===> *
         TO FILTER DISPLAYED POOLS, SPECIFY A THRESHOLD VALUE BELOW:
         CURRENT UTILIZATION         >          %
         MAXIMUM FREE                >          %
         MAXIMUM UTILIZATION         >          %
         OVERALL MAXIMUM UTILIZATION >          %
         DYNAMIC BUFFERS IN USE      >


F1=HELP  F3=END  F5=APPLS  F6=TERMS  F9=NCPS  F10=LINES  F12=LOGOFF
OPTIONALLY, ENTER A COMMAND BELOW
---->
```

How to Access

Do one of the following:

- Choose option 2 from the NetSpy Main Menu. Then, on the NCP Statistics Selection Menu, choose option 8.
- Enter DNCBM from the command line of any screen.

How to Use

Press Enter to request all NCP control block statistics or specify optional parameters to limit the display and then press Enter.

Optional Parameters for NCP Control Block Statistics

Parameter	Description
NODE NAME	See explanation under Specifying Optional Parameters on Selection Criteria Menus.
CURRENT UTILIZATION	Displays only control block pools with more than *n* percent of all control blocks in use for the pool.
MAXIMUM FREE	Displays only control block pools with more than *n* percentage of all control blocks free for the pool during the interval.
MAXIMUM UTILIZATION	Displays only control block pools whose maximum percentage of all control blocks in use for the pool exceeds *n*.
OVERALL MAXIMUM UTILIZATION	Displays only control block pools whose maximum percentage of all control blocks for the pool in use since NCP initialization exceeds *n*.

Parameter	Description
DYNAMIC BUFFERS IN USE	Displays only control block pools whose number of buffers from the NCP buffer pool currently being used for dynamic control blocks for the pool exceeds *n*.

NCP Control Block Statistics Screen

This screen displays specific NCP control block statistics.

```
HOST=S028                           *** 22APR1999.111 THU 13:10:39 ***

             *** NCP CONTROL BLOCK STATISTICS (INTERVAL) ***
             POOL   OVERALL  - UTILIZATION -   MAXIMUM  MAXIMUM  DYNAMIC
POOL NAME    SIZE   MAXIMUM   CURRENT MAXIMUM     FREE  DYNAMIC  BUFFERS  NETID
BUFFER        500      80.8     57.3     65.8     53.4      6.2      4
BSB         11234      10.0      7.4      8.1      2.7        0      0
CUB           200     115.0     85.6    102.5     78.3      4.7      3
FCT           768       0.0        0        0        0        0      0
TR LLB          0
LNB         25000      53.8     26.2     29.3     26.2        0      0
LND/LNB     11550      85.0     75.8     77.2     68.9        0      0
LTX          1000     104.3    102.8    102.8    100.6      2.8      1
LUB         12750      92.7     81.1     82.3     80.9        0      0
LUX           250     143.4     32.5     49.7     28.2        0      0
SNI NLB/NIB   125       5.1      3.7      5.1        0        0      0  NETWORKA
SNI NLD/NIB  2500      11.5     11.5     11.5        0        0      0  NETWORKB

  F1=HELP  F3=END  F5=APPLS  F6=TERMS  F9=NCPS  F10=LINES  F12=LOGOFF
  OPTIONALLY, ENTER A COMMAND BELOW
  ---->
```

How to Access

Do one of the following:

- Choose option 2 from the NetSpy Main Menu. Then, on the NCP Statistics Selection Menu, choose option 8.
- Enter DNCB from the command line of any screen.

Using the Operator Command Menu

This menu gives you the ability to alter log collection, network session accounting, and the monitoring status of resources in the VTAM and NCP interfaces.

```
              *** NETSPY MENU OF AVAILABLE OPERATOR COMMANDS ***

 SELECT AN OPTION
 ====>
 1 - SMNR LU =
 2 - PMNR LU =
 3 - SFDR LU =
 4 - PFDR LU =
 5 - DEFINE NWAY =        NPALU =        MON =      RETRY = (      ,      )
 6 - SSMF NODE =          SCOPE =
 7 - PSMF NODE =          SCOPE =
 8 - DNS  NODE =          SCOPE =        NETSPY =
 9 - DEFINE NODE =        NPALU =        MON =      RETRY = (      ,      )
10 - ACQUIRE NCP =
11 - DELETE NODE =
12 - DNSA
13 - SNSA
14 - PNSA NODE =             TYPE =
15 - NTNOPER

F1=HELP    F3=END    F5=APPLS    F6=TERMS    F9=NCPS    F10=LINES    F12=LOGOFF
 OPTIONALLY, ENTER A COMMAND BELOW
---->
```

How to Access

Access in one of two ways:

- Select option 3 from the NetSpy Main Menu.
- Enter OPER from the command line of any screen.

Note: Only privileged users can access the Operator Command Menu.

How to Use

Enter the number of your command selection and, if required, the associated parameter.

Options on the Operator Command Menu

Option	Description
1-SMNR	Starts monitoring traffic and response time through the VTAM interface for those terminals satisfying the LUNAME restrictions. **LUNAME** must be entered as a terminal name prefix so that all terminals starting with that prefix will be selected. (Generic names are not supported here.)
2-PMNR	Stops monitoring of traffic and response time through the VTAM interface for those terminals satisfying the given LUNAME restrictions.

Option	Description
3-SFDR	Activates the FORCEDR feature for terminals satisfying the given LUNAME restrictions. FORCEDR will be used only for a percentage of transactions, as specified for the application with which the terminal is in session.
4-PFDR	Deactivates the FORCEDR feature for terminals satisfying the given LUNAME restrictions.
5-DEFINE NWAY	Indicates you are using an IBM 3746 Model 950 Nways controller, which does not require an NCP. The NPALU name must be specified.
6-SSMF	Starts monitoring of traffic and error statistics through the NCP interface for those NCP resources satisfying the node name and scope restrictions, and starts log collection. **Note:** You must use the PSMF command to collect data for nodes for which you are writing log data. **NODENAME** must be entered as a valid NCP name, line, cluster, or terminal. **SCOPE** indicates the scope of the node affected by the command. It defaults to ONLY, which starts monitoring for only the resource matching the node name. Other possible values are: **LINES** - All non-X.25 lines **PUS** - All non-X.25 physical units **LUS** - All non-X.25 logical units **ALL** - All resources **X25LINES** - X.25 MCH lines **X25PUS** - X.25 MCH physical units **X25LUS** - X.25 logical units **X25VCS** - X.25 virtual circuits **X25STATS** - X.25 MCH lines, MCH physical units, and virtual circuits **X25ALL** - All X.25 resources

Option	Description
	NTRIS - All token ring (TIC) resources **PLINKS** - All token ring (TIC) physical links **LLINKS** - All token ring (TIC) logical links **ETHPLINK** - All Ethernet physical links **ETHALL** - All Ethernet resources **FRPLINK** - All Frame Relay physical links **FRLLINK** - All Frame Relay logical links **FRPU** - All Frame Relay physical units **FRALL** - All Frame Relay resources **ALLLINES** - All lines **ALLPUS** - All physical units **ALLLUS** - All logical units **TIC3LINK** - All TIC3 physical lines **TIC3PU** - All TIC3 logical PUs **TIC3ALL** - All TIC3 resources
7-PSMF	Stops monitoring of traffic and error statistics only through the NCP interface for those NCP resources satisfying the node name and scope restrictions. **NODENAME** and **SCOPE** are specified for PSMF in exactly the same way as for the SSMF command previously described.
8-DNS	Displays the monitoring status for NCP resources defined through the DEFINE command and satisfying node name and scope restrictions. You can specify **SCOPE** as described for the SSMF command. **NETSPY** indicates the NetSpy session for which you want to display data.
9-DEFINE NODE	Defines major nodes to NetSpy. This option scans the major node stage one input to produce a definition of the particular NCP (NCPNAME must be entered) or other major node type as required by NetSpy. Other types include local cluster, local SNA nodes, and switched nodes. The NCP RRT load module will be loaded for an NCP definition and the current network addresses will be used by NetSpy to make sure you can communicate with the NCP even if the NCP source provided does not match your current production version.

Option	Description
	The MON=YES option only establishes a session between NetSpy and the NPALU. To start collecting NPA data, use the SSMF command. The MON=YES option is available for NCP resources only. It has no effect on other major node types if the node defined is not an NCP major node. *You must ensure that the RRT load module is the one VTAM used the last time the NCP was activated.* If you specify MON=YES or the program defaults to it, a session will be established with your generated NPA logical unit in the NCP. The source for NCP and other major node types is read from the partitioned data set identified by the //NCPSRC DD statement in the NetSpy procedure. The NCP RRT load module is loaded from the STEPLIB indicated in the NetSpy procedure. **Note:** NetSpy uses line speed information from an NCP definition to refine its network response time calculations. Consequently, it is important that all NCPs be defined to all copies of NetSpy in your complex. However, since only one NetSpy can establish a session with an NCP to collect its data, you must specify MON=NO in the DEFINE statements for an NCP for all but the one copy of NetSpy that is to collect the NCP data. Typically, you would choose one NetSpy to collect data for all your NCPs in your network (MON=YES), and specify MON=NO for all NCPs for all other copies of NetSpy. The online reports also require that you define all your NCPs in all hosts. If MON=YES, enter the required NPA logical unit name on the NPALU= option. NetSpy will establish a session with this NPALU. If MON=NO, the NPALU parameter is not used. On the RETRY keyword, enter the number of times NetSpy will try to acquire an NCP's NPALU session after it has been lost or an attempt to acquire it has failed. Valid values are 0 to 9999. Optionally, you can also enter the time between attempted retries in minutes. Valid values are 1 to 9999. The default is (0,*NetSpy-interval*).
10-ACQUIRE	Reestablishes the session between NetSpy and an NCP. All outstanding requests for collection will be honored as soon as the session is established. **NCPNAME** must be a previously defined NCP.

Option	Description
11-DELETE	Breaks the session between NetSpy and an NCP and/or deletes a major node definition. All control blocks defining the NCP or major node will be released, and NetSpy will not recognize any commands addressed to this major node. You now can enter a new DEFINE command to read the latest NCP or other major node source. **NODENAME** must be a previously defined NCP or major node.
12-DNSA	Displays network session accounting status. The status display includes the following information: ■ An indication of whether accounting is turned on ■ The file to which NetSpy is recording statistics ■ The NCPs on which NetSpy is collecting statistics ■ The number of sessions on which NetSpy is currently collecting statistics
13-SNSA	Starts the collection of network accounting statistics. This screen allows you to turn on network accounting online. First, select the log destination where you want NetSpy to record the statistics. Then, specify the NCP node name for which you want statistics and the type of statistics desired, either session or gateway. **Note:** If the NCP has not been defined in the STARTPRM file, select option 9 from the Operator Command Menu, supply the NCP node name, and specify MON=YES before attempting to issue SNSA. Network accounting statistics can be collected regardless of whether the NCP is collecting performance statistics (SSMF).
14-PNSA	Stops the collection of network accounting statistics. This screen allows you to turn off network accounting online. Select option 14 and supply the NCP name to stop network accounting on one NCP, or specify ALL to stop it on all NCPs. Also, in the TYPE field, specify the type of accounting to be stopped: either NSA for session accounting or GWA for gateway accounting.
15-NTNOPER	Shows the status of NetSpy-to-NetSpy communication in your network. This command displays a screen showing you what other NetSpys are in session with this NetSpy. You can also enter a connect or disconnect from this screen.

NCP Node Monitoring Status Screen

This screen displays the monitoring status of NCP nodes defined to NetSpy.

```
HOST=IPOX                                   28JUN1999.179 MON 14:52:14 ***

                    *** NETSPY NCP NODE MONITORING STATUS ***
NAME           TYPE          SESSION    MONITOR     SMF    COLL#   MAXCOLL#
---------------------------------------------NCP = N059408 ---------------
N059408        NCP             OK         YES       YES      291       6914
 L0504         XI LINK         OK         YES       YES
  C050401      XI PU           OK         YES       YES
   T0504010    LU              OK          NO        NO
 L0505         CLA LINK        OK         YES       YES
  C050501      CLA PU          OK         YES       YES
   T0505010    CLA LU          OK          NO        NO
 L0506         ESCON PLINK     OK         YES       YES
  C050601      ESCON PSTAT     OK         YES       YES
 L0507         ESCON LLINK     OK         YES       YES
  C050701      ESCON PU        OK         YES       YES
   T0507010    ESCON LU        OK          NO        NO
 L0508         TIC3 PLINK      OK         YES       YES
  C050801      TIC3 PSTAT      OK         N/A       N/A
---------------------------------------------NWAY = N059402 ---------------
N05J0016       SDLC LINK       OK         YES       YES

F1=HELP   F3=END   F5=APPLS   F6=TERMS   F9=NCPS   F10=LINES   F12=LOGOFF
OPTIONALLY, ENTER A COMMAND BELOW
---->
```

How to Access

Access in either of the following ways:

- Select option 8, DNS, with NODENAME=* and SCOPE=ALL from the Operator Command Menu. NETSPY= defaults to your current active NetSpy session.
- Enter DNS from the command line of any screen. Specifying SCOPE and NETSPY is optional. The command DNS SCOPE=ALL produced the display on this page.

NetSpy-to-NetSpy Operator Screen

This screen displays the status of NetSpy-to-NetSpy communication and allows you to start or stop NetSpy-to-NetSpy sessions.

```
HOST=S032

                    *** NETSPY TO NETSPY OPERATOR SCREEN ***

 THIS NETSPY NSYXNAME: S032
 DEFAULT NSYXNAME USED IN COMMANDS: * NONE *

         C - CONNECT  NSYXNAME   PLU   SESSION STATUS        CMDS
         D - DISCONN             SLU
         -----------  ---------  ---   ---------------       ----

         _            S028       SLU   ACTIVE SESSION           3
         _            S008             APPL UNAVAILABLE
         _           ------

F1=HELP  F3=END  F5=APPLS  F6=TERMS  F9=NCPS  F10=LINES  F12=LOGOFF
OPTIONALLY, ENTER A COMMAND BELOW
---->
```

How to Access

Do one of the following:

- On the Operator Command Menu, select option 15, NTNOPER.
- At the command line of any NetSpy screen, enter NTNOPER.

How to Use

View the status of NetSpy-to-NetSpy sessions and issue commands to start or stop those sessions, if you desire.

Information on the NetSpy-to-NetSpy Operator Screen

Name	Description
HOST	Host ID of this NetSpy.
THIS NETSPY NSYXNAME	The NSYXNAME, specified in INITPRM, for this NetSpy. If you did not specify an NSYXNAME in INITPRM, the value NONE appears in this field.
DEFAULT NSYXNAME USED IN COMMANDS	The global NSYXNAME you specified on the NETSPY command. NetSpy uses this name with all the display commands issued that support NetSpy-to-NetSpy displays. If you did not set a global NSYXNAME in INITPRM, the value NONE appears in this field.
C-CONNECT	Enter a C under this column to establish a session with the NetSpy noted in the NSYXNAME column.
D-DISCONN	Enter a D under this column to terminate a session with the NetSpy noted in the NSYXNAME column.
NSYXNAME	Displays sessions with other NetSpys that this NetSpy knows about. The name displayed is the NSYXNAME of the remote NetSpy. You can enter another NSYXNAME here and a C or D in the C-CONNECT or D-DISCONN column to establish or terminate a NetSpy-to-NetSpy session.
PLU/SLU	Describes whether or not this NetSpy is acting as a primary or secondary logical unit.
SESSION STATUS	Indicates whether the NetSpy specified under NSYXNAME (the remote NetSpy) is in session with the NetSpy specified as THIS NETSPY NSYXNAME. Session status can be one of the following: **ACTIVE SESSION** - The session between the two NetSpys is active. **SESSION STARTING** - NetSpy is attempting to start a session with the remote NetSpy. **APPL UNAVAILABLE** - The session with the remote NetSpy once existed but is now lost, or NetSpy attempted to establish a session at initialization time and failed.
CMDS	The number of commands that are currently being executed on the NetSpy-to-NetSpy session.

Viewing Virtual Route, Buffer, and Tuning Statistics

From the VR, Buffer and TNSTATS Selection Menu, you may choose to display virtual route, buffer, or tuning statistics.

In this chapter you will find an example of each screen and explanations of the optional parameters you may specify to request specific statistics. See the appendix entitled "Report and Display Headings" for an alphabetical listing of column headings and explanations.

Menus and Displays

The following illustration shows the menu and display options for virtual route, buffer, and tuning statistics.

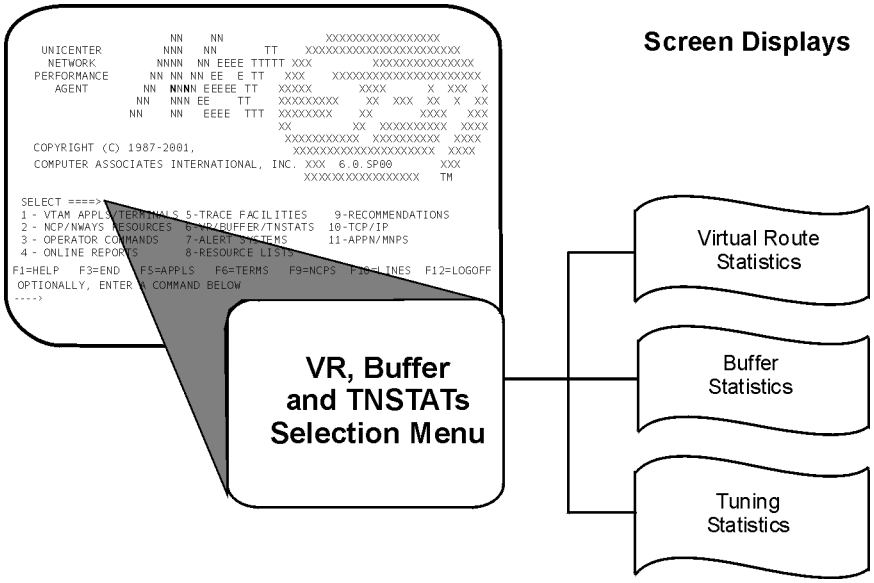

VR, Buffer, and Tuning Statistics Selection Menu

This menu lets you request specific VTAM statistics.

```
HOST=S028

      *** NETSPY VR, BUFFER, AND TUNING STATISTICS SELECTION MENU ***

SELECT AN OPTION
====>

       1 - VTAM VR STATISTICS
       2 - VTAM BUFFER STATISTICS
       3 - VTAM TUNING STATISTICS

F1=HELP  F3=END  F5=APPLS  F6=TERMS  F9=NCPS  F10=LINES  F12=LOGOFF
OPTIONALLY, ENTER A COMMAND BELOW
---->
```

How to Access

Access in two ways:

- Select option 6 from the NetSpy Main Menu.
- Enter DV from the command line of any screen.

How to Use

Select the number corresponding to the kind of display you want and press Enter.

- Option 1 displays the VR Statistics Display Menu.
- Option 2 displays the NetSpy Buffer Statistics Selection Menu.
- Option 3 displays the NetSpy Tuning Statistics Selection Menu.

Refer to the following sections for information on each of these options.

Virtual Route Statistics Selection Menu

This menu lets you request virtual route statistics and select optional parameters.

```
HOST=SO32
                    *** VR STATISTICS DISPLAY MENU ***

 SELECT AN OPTION
 ====>

 VR DISPLAY COMMANDS:

   1 - VTAM VR STATISTICS

  SPECIFY VR ID, DEST. SUBAREA NUMBER AND/OR A THRESHOLD VALUE:

     VR ID/NUMBER      ===>         DEST. SUBAREA   ===>
     AVG NET RESP TIME ===>         TOTAL # OF PIUS ===>
     # INBOUND PIUS    ===>         # OUTBOUND PIUS ===>
     DISPLAY MODE      ===>         NETSPY          ===>

F1=HELP  F3=END  F5=APPLS  F6=TERMS  F9=NCPS  F10=LINES  F12=LOGOFF
OPTIONALLY, ENTER A COMMAND BELOW
---->
```

How to Access

Choose option 1 from the NetSpy VR, Buffer and Tuning Statistics Selection Menu.

How to Use

Press Enter to request statistics on all virtual routes known to NetSpy, or select optional parameters to limit the display and then press Enter.

Optional Parameters for Virtual Route Statistics

Parameter	Description
VR ID/NUMBER	ID or number of the virtual route for which you want statistics.
DEST. SUBAREA	NCP subarea or a host subarea other than the origin subarea.
AVG NET RESP TIME	Displays only virtual routes with an average network response time greater than the value entered.
TOTAL # OF PIUS	Displays only virtual routes with a total PIU (path information units) count greater than the value entered.
# INBOUND PIUS	Displays virtual routes with an inbound PIU count greater than the value entered.
# OUTBOUND PIUS	Displays virtual routes with an outbound PIU count greater than the value you entered.
DISPLAY MODE	See INTERVAL MODE under Specifying Optional Parameters on Selection Criteria Menus.
NETSPY	See DESTINATION NETSPY-TO-NETSPY NAME under Specifying Optional Parameters on Selection Criteria Menus.

Virtual Route Statistics Screen

This screen displays requested virtual route statistics.

```
HOST=S032           MEASURED INTERVAL=  2.1M  25MAY1999.144 TUE 12:40:31 ***

    *** NETSPY VIRTUAL ROUTE STATISTICS FOR ORIGIN SUBAREA   32 (INTERVAL) *
 DEST VR T  AVG OUTBOUND-PIUS INBOUND-PIUS   NO. CUR MIN MAX CUR  T-TIME  #PIU
 SUBA NO P RESP  COUNT   SIZE  COUNT  SIZE  SESS WDW WDW WDW STAT B/HELD   B/H
------ NETSPY= S032   ------ ORIGIN SUBAREA =   32---------------------------
    4  1 0                                      1             OPEN    0.0     0
    4  1 2  0.3     14     36     14   20      0   5   5   5 OPEN    0.0     0
    8  0 0  0.0    230    573    125   12     17   8   8   8 OPEN    0.0     0
   10  0 0                                      1             OPEN    0.0     0
   10  0 2  1.6      1     54      4   45      0   4   4   4 OPEN    0.0     0
   20  2 0                                      1             OPEN    0.0     0
   20  2 2  0.0      1     54      4   45      4   6   6   6 OPEN    0.0     6
   28  2 2  0.0     50     17     23    9      0   3   3   3 OPEN    0.0     0
------ NETSPY= S028   ------ ORIGIN SUBAREA =   28---------------------------
    4  1 2  0.3     61     49     33   49      0   5   5   5 OPEN    0.0     0
    6  2 2  0.0     32     12     34   18      0   3   3   3 OPEN    0.0     0
    8  0 0  0.0    593    544    227  212     89  42  42  42 OPEN    0.0     0
    8  0 2  0.0    123     48     26   39      0   4   4   4 OPEN    0.0     0
   10  0 0                                      1             OPEN    0.0     0
   10  0 2  1.3     61     57     59   31      0   7   7   7 OPEN    0.0     0

F1=HELP  F3=END  F5=APPLS  F6=TERMS  F9=NCPS  F10=LINES  F12=LOGOFF
OPTIONALLY, ENTER A COMMAND BELOW
---->
```

How to Access

Access in two ways:

- Request your display from the VR Statistics Display Menu.
- Enter DV from the command line of any screen.

How to Use

If the DV command is issued NetSpy to NetSpy, the NETSPY= *name* (for example, NETSPY= S032) appears in the line separating each group of subareas from the next. The subareas under each NETSPY name are monitored by that particular NetSpy. The NETSPY name represents the name specified on the NSYXNAME parameter in each NetSpy's INITPRM.

The origin subarea number (for example, ORIGIN SUBAREA = 32) appears in the same line as the NETSPY name. This field displays the VTAM subarea number for the NetSpy name displayed. All subareas under this line have the same origin subarea.

Buffer Statistics Selection Menu

This menu lets you request specific buffer statistics for display.

```
HOST=S008
               *** NETSPY BUFFER STATISTICS SELECTION MENU ***

 SELECT AN OPTION
 ====>

      1 -  VTAM BUFFER POOL STATISTICS
      2 -  CRPL USAGE BY APPLICATION         APPL =
      3 -  IO BUF USAGE BY APPLICATION       APPL =

 FOR OPTIONS #2, #3, SPECIFY APPLICATION NAME, RLIST FOR RESOURCE LIST,
 OR "*" FOR ALL.


F1=HELP  F3=END  F5=APPLS  F6=TERMS  F9=NCPS  F10=LINES  F12=LOGOFF
OPTIONALLY, ENTER A COMMAND BELOW
---->
```

How to Access

Access in one of two ways:

- Choose option 2 from the NetSpy VR, Buffer and Tuning Statistics Selection Menu.
- Enter BUFFMENU from the command line of any screen.

How to Use

Select the number corresponding to the statistics you want to display and press Enter.

- Option 1 displays NetSpy VTAM Fixed Buffer statistics.
- Option 2 displays CRPL Usage by Application statistics for the application or resource list you specify.
- Option 3 displays I/O Buffer Usage by Application statistics for the application resource list you specify.

Refer to the following sections for information about each of these options.

VTAM BufferPool Statistics Screen

This screen displays VTAM buffer statistics.

```
HOST=XE44                                        17FEB1999.049 WED 17:33:16  ***

                    *** NETSPY VTAM BUFFER STATISTICS ***
BUFF  TOTAL  IN   AVAIL  OV SLO  OV EXP  BASE    MAX    MAX  TIMES   ACT  BUFF
NAME         USE          POINT   POINT  ALLO   ALLO   USED    EXP  EXTS  SIZE
IO00    242   28    214     194     114   242    242    107      0     0   338
BS00     24    0     24      24      12    24     24      0      0     0   298
LP00     56    3     53      53      33    56     56     11      0     0  2032
XD00      5    0      5       5       1     5      5      0      0     0   697
LF00    180  133     47      47      46    30    180    138      0     5   120
CRPL    325  159    166     146      66   175    325    176      0     3   144
SF00     64   26     38      38      37    64     64     27      0     0   112
SP00     21    0     21      21      20    21     21      2      0     0   176
AP00     56    0     56      54      53    56     56      0      0     0    56
TI00    180    0    180     180     120   180    180      2      0     0   632
CRA4     12    0     12      12      10    12     12      6      0     0  4080
CRA8     12    0     12      12      10    12     12      0      0     0  8176

F1=HELP    F3=END    F5=APPLS    F6=TERMS    F9=NCPS    F10=LINES    F12=LOGOFF
OPTIONALLY, ENTER A COMMAND BELOW
---->
```

How to Access

Access in two ways:

- Choose option 1 from the NetSpy Buffer Statistics Selection Menu.
- Enter the DBUFRUSE from the command line of any screen.

CRPL Allocation by APPL Screen

This screen displays the percentage of copy request parameter lists (CRPLs) in use, by application.

```
HOST=S008                                        28JUN1999.179 MON 10.20.47  ***

                    *** NETSPY CRPL ALLOCATION BY APPL ***
APPL      JOB       ALLOC       1    2    3    4    5    6    7    8    9   1
NAME      NAME        PCT  0....0....0....0....0....0....0....0....0....0...00
TPXPROD   TPX20PRD*  79.4  ]=====================================>
NETSPYXA  NETSPY40*   9.6  ]====>
TSO08001  DSINB11     6.5  ]==>
TSO08002  DSILM11     3.0  ]=>
TSO08003  DSILP11     0.5  ]>


F1=HELP  F3=END  F5=APPLS  F6=TERMS  F9=NCPS  F10=LINES  F12=LOGOFF
OPTIONALLY, ENTER A COMMAND BELOW
---->
```

How to Access

Access in two ways:

- Choose option 2 from the NetSpy Buffer Statistics Selection Menu. Specify an application, resource list, or * for all resources.
- Enter DCRPLUSE from the command line of any screen.

I/O Buffer Allocation by APPL Screen

This screen displays a screen showing percentage of I/O buffer pool allocated.

```
HOST=S008                                        28JUN1999.179 MON 10.20.47  ***

                 *** NETSPY I/O BUFFER ALLOCATION BY APPL ***
APPL      JOB       ALLOC       1    2    3    4    5    6    7    8    9   1
NAME      NAME        PCT  0....0....0....0....0....0....0....0....0....0...00
VTAM1     NET        25.0  ]===========>
TSO08001  DSINB11     6.5  ]==>
TSO08002  DSILM11     3.0  ]=>
TSO08003  DSILP11     0.5  ]>


F1=HELP  F3=END  F5=APPLS  F6=TERMS  F9=NCPS  F10=LINES  F12=LOGOFF
OPTIONALLY, ENTER A COMMAND BELOW
---->
```

How to Access

Access in two ways:

- Choose option 3 from the NetSpy Buffer Statistics Selection Menu. Specify an application, resource list, or * for all resources.
- Enter DIOBFUSE from the command line of any screen.

VTAM Tuning Statistics Selection Menu

This menu lets you request specific VTAM tuning statistics. For help interpreting VTAM tuning statistics, refer to these IBM publications: *VTAM Customization* (SC23-0112-3) and *VTAM Performance and Tuning* (GG66-3106-00).

```
HOST=S028

             *** NETSPY TUNING STATISTICS SELECTION MENU ***

 SELECT AN OPTION
 ====>

   1 - NCP TUNING STATISTICS
   2 - CTCA TUNING STATISTICS FOR
   3 - LOCAL SNA CLUSTER TUNING STATISTICS
   4 - MULTI-PATH CHANNELS (MPC) TUNING STATISTICS


    ENTER RESOURCE NAME, "*" OR "RLIST" FOR RESOURCE LIST:


F1=HELP  F3=END  F5=APPLS  F6=TERMS  F9=NCPS  F10=LINES  F12=LOGOFF
OPTIONALLY, ENTER A COMMAND BELOW
---->
```

How to Access

Access in two ways:

- Select option 3 from the VR, Buffer, and Tuning Statistics Selection Menu.
- Enter DTSMENU from the command line of any screen.

How to Use

Select the number corresponding to the kind of statistics you want to display, specify a resource name, RLIST, or * for all resources, and press Enter.

- Option 1 displays tuning statistics for NCPs.
- Option 2 displays tuning statistics for CTCAs.
- Option 3 displays tuning statistics for local SNA clusters.
- Option 4 displays tuning statistics for Multi-Path Channels.

Online Tuning Statistics Display

This screen displays tuning statistics while NetSpy continues to run.

```
HOST=XAE1                                    27SEP2000.271 WED 10:30:26 ***
               *** NETSPY TUNING STATISTICS SUMMARY ***    INTERVAL=  26.2

 TUNING       MAX VALUE     HIGH WATER      OVERFLOW       FIRST OVERFLOW
 STATISTIC    SPECIFIED        MARK          COUNT         DATE AND TIME
 ---------   -----------    ----------    ----------    ------------------
 MAXLU           ZZZZZZ9       ZZZZZZ9       ZZZZZZ9    DDMMMYYYY HH:MM:SS
 MAXAPPL         ZZZZZZ9       ZZZZZZ9       ZZZZZZ9    DDMMMYYYY HH:MM:SS
 MAXNOSA         ZZZZZZ9       ZZZZZZ9       ZZZZZZ9    DDMMMYYYY HH:MM:SS
 MAXNOVR         ZZZZZZ9       ZZZZZZ9       ZZZZZZ9    DDMMMYYYY HH:MM:SS
 MAXCA           ZZZZZZ9       ZZZZZZ9       ZZZZZZ9    DDMMMYYYY HH:MM:SS
 MAXJOBBF        ZZZZZZ9       ZZZZZZ9       ZZZZZZ9    DDMMMYYYY HH:MM:SS
 STATBUFQ        ZZZZZZ9       ZZZZZZ9       ZZZZZZ9    DDMMMYYYY HH:MM:SS
 ------------------------- APPL MAXLU STATISTICS --------------------------
 A04ISP20        ZZZZZZ9       ZZZZZZ9       ZZZZZZ9    DDMMMYYYY HH:MM:SS
 A04ITSO         ZZZZZZ9       ZZZZZZ9       ZZZZZZ9    DDMMMYYYY HH:MM:SS


F1=HELP   F3=END   F5=APPLS   F6=TERMS   F9=NCPS   F10=LINES   F12=LOGOFF
  OPTIONALLY, ENTER A COMMAND BELOW
 ---->
```

How to Access

Enter STAT from the command line of any NetSpy screen.

Field Description

The following table provides information about the column headings on the Online Tuning Statistics Display.

Field	Description
Tuning Statistics	The name of the control block being reported on. The control block names are the same as the initialization parameters, except for STATBUFQ. STATBUFQ is determined by MAXNONCP.
MaxValue	The value specified or defaulted for the parameter in the initialization parameters. STATBUFQ is calculated from MAXNONCP. Each increment of MAXNONCP increases STATBUFQ by 500.
High Water Mark	The highest usage of the control block.
Overflow Count	The sum of the number of times NetSpy has tried to acquire the control block elements but could not. See message NSY0228 for more details.
First Overflow Date and Time	The date and time when the first control block overflow happened or NOT APPLICABLE if no overflows have occurred.

Tuning Statistics Display for NCPs

This screen displays VTAM tuning statistics for NCPs.

```
HOST=S028  *** NETSPY TNSTATS DISPLAY ***  28JUN1999.179 MON 11:05:45 ***

 RESOURCE: ACO-L    MAJNODE: ISTPUS       TYPE: NCP      ADDRESS: 0E80
                       CHWR:   1093       CHRD: 432         ATTN:  839
                      RDATN:    432       IPIU: 495         OPIU: 1093
                      RDBUF:    549      SLODN:   0

F1=HELP  F3=END  F5=APPLS  F6=TERMS  F9=NCPS  F10=LINES  F12=LOGOFF
OPTIONALLY, ENTER A COMMAND BELOW
---->
```

How to Access

Access in two ways:

- Choose option 1 from the NetSpy Tuning Statistics Selection Menu and specify a resource name, RLIST for a resource list, or * for all resources.
- Enter DTNSTATS *resourcename* TYPE=NCP from the command line of any screen.

Tuning Statistics Display for Channel-to-Channel Adapters

This screen displays VTAM tuning statistics for channel-to-channel adapters.

```
HOST=S028  *** NETSPY TNSTATS DISPLAY ***  28JUN1999.179 MON 11:07:31 ***

 RESOURCE: L2808    MAJNODE: CTC2808      TYPE: 3088        ADDRESS: 0703
                      CHNRM:  10268      CHMAX:      0         ATTN:   9548
                       IPIU:  13009       OPIU:  13365        RDBUF: 669033
                      SLODN:      0     TIMERS:      9        QDPTH:     64
                     BUFCAP:      0        PRI:   2179


F1=HELP  F3=END  F5=APPLS  F6=TERMS  F9=NCPS  F10=LINES  F12=LOGOFF
OPTIONALLY, ENTER A COMMAND BELOW
---->
```

How to Access

Access in two ways:

- Choose option 2 from the NetSpy Tuning Statistics Selection Menu and specify a resource name, RLIST for a resource list, or * for all resources.
- Enter DTNSTATS *resourcename* TYPE=CTCA from the command line of any screen.

How to Use

If NetSpy detects a channel that is 3088-attached, then “3088” appears in the TYPE field of the display. When this is the case, the CHMAX value will be zero and the RDBUF value will be the number of bytes transferred and not a buffer count.

Tuning Statistics Display for Local SNA Clusters

This screen displays VTAM tuning statistics for local SNA clusters.

```
HOST=S028  *** NETSPY TNSTATS DISPLAY ***  28JUN1999.179 MON 11:07:31 ***

 RESOURCE: H08PE80  MAJNODE: LOCALDEC     TYPE: LSNA      ADDRESS: 0E80
                       CHWR:   1093       CHRD:  432         ATTN:  839
                      RDATN:    432       IPIU:  495         OPIU: 1093
                      RDBUF:    549      SLODN:    0


F1=HELP  F3=END  F5=APPLS  F6=TERMS  F9=NCPS  F10=LINES  F12=LOGOFF
OPTIONALLY, ENTER A COMMAND BELOW
---->
```

How to Access

Access in two ways:

- Choose option 3 from the NetSpy Tuning Statistics Selection Menu and specify a resource name, RLIST for a resource list, or * for all resources.
- Enter DTNSTATS *resourcename* TYPE=LSNA from the command line of any screen.

Tuning Statistics Display for Multi-Path Channels

This screen displays VTAM tuning statistics for Multi-Path Channels (MPCs).

```
HOST=S002  *** NETSPY TNSTATS DISPLAY ***  01MAR1999.060 MON  9:26:30 *R*

  RESOURCE: MPCLINE1  MAJNODE : MPCNODE1
                      IPIU    :    36003    OPIU     :  44908    WRITES : 130592
                      TSWEEP  :        2    QSWEEP   :      1    READS  : 231864

    SUBCHANNEL: 0783  STATUS  :   ACTIVE    DIRECTION:  WRITE    WRITE %:     50
                      BSIZE   :     4096    MAXBYTES :   3900    SIO    : 115932
                      SLOWDOWN:      N/A    BYTECNTO :      3    BYTECNT: 999999

    SUBCHANNEL: 0785  STATUS  :   ACTIVE    DIRECTION:  WRITE    WRITE %:     50
                      BSIZE   :     4096    MAXBYTES :   3200    SIO    : 115932
                      SLOWDOWN:      N/A    BYTECNTO :      2    BYTECNT:   5431

    SUBCHANNEL: 0787  STATUS  :   ACTIVE    DIRECTION:   READ    READ % :    100
                      BSIZE   :    67245    MAXBYTES :     10    SIO    : 130592
                      SLOWDOWN:        8    BYTECNTO :   7012    BYTECNT:   5431

    SUBCHANNEL: 0789  STATUS  :     INOP    DIRECTION:   READ    READ % :    N/A
                      BSIZE   :      N/A    MAXBYTES :    N/A    SIO    :    N/A
                      SLOWDOWN:      N/A    BYTECNTO :    N/A    BYTECNT:    N/A

 F1=HELP    F3=END    F5=APPLS    F6=TERMS    F9=NCPS    F10=LINES    F12=LOGOFF
  OPTIONALLY, ENTER A COMMAND BELOW
 ---->
```

How to Access

Access in two ways:

- Choose option 4 from the NetSpy Tuning Statistics Selection Menu and specify a resource name, RLIST for a resource list, or * for all resources.
- Enter DTNSTATS *resourcename* TYPE=MPC from the command line of any screen.

How to Use

If NetSpy detects a subchannel of an MPC group that is not active, the subchannel will be listed but all fields for it will contain “N/A” since its statistics are not available.

Viewing and Monitoring TCP/IP Statistics

The TCP/IP Statistics Selection Menu and submenus allow you to:

- Choose displays of various performance statistics related to TCP/IP
- Add a stack for NetSpy to monitor
- Change a stack that NetSpy is monitor
- Delete a stack from NetSpy monitoring

This chapter contains an example of each screen and explanations of the parameters that you can specify. See the appendix entitled "Report and Display Headings" for an alphabetical listing of column headings and explanations.

Note: To access diagnostic displays see the *Unicenter NetMaster Network Management for TCP/IP* documentation.

Menus and Displays

The following illustration shows the TCP/IP Statistics Selection Menu and the types of displays for TCP/IP performance data.

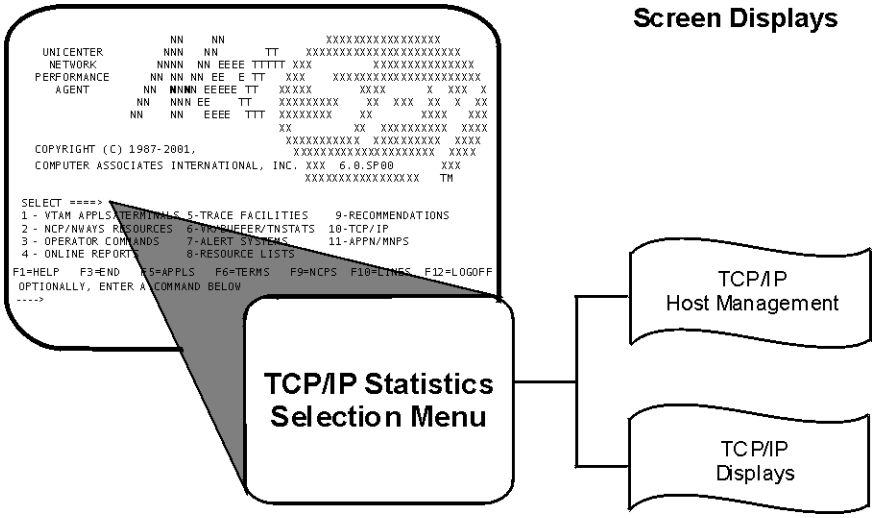

TCP/IP Statistics Selection Menu

Select option 10 from the NetSpy main menu to display the following menu.

```
HOST=SYS1
                 *** TCP/IP PRIMARY MENU ***

SELECT AN OPTION:

1 - TCP/IP HOST MANAGEMENT
2 - TCP/IP DISPLAYS


F1=HELP   F3=END   5=APPLS   F6=TERMS   F9=NCPS   F10=LINES   F12=LOGOFF
 OPTIONALLY, ENTER A COMMAND BELOW
---->
```

Select an Option

Choose:

- Option 1 to change, delete, or add a TCP/HOST stack
- Option 2 to display information for a TCP/IP HOST stack currently being monitored by NetSpy

How to Access

Do one of the following:

- Select option 10 from the NetSpy Main Menu.
- Enter TCPIP from the command line of any screen.

How to Use

Select the number corresponding to the kind of display you want and press Enter.

TCP/IP Host Management Selection Menu

This menu lets you add a stack to NetSpy monitoring, change a stack currently being monitored, or delete a stack from NetSpy monitoring.

```
HOST=XE44
                     ***  TCP/IP HOST MANAGEMENT  ***

SELECT AN OPTION

=====>           (1.CHANGE  2.DELETE  3.ADD)

TCP/IP HOST ADDRESS/NAME(ADD ONLY):


SELECT ONE HOSTIP WITH "S" FROM THE LIST BELOW:

_ 172.16.155.44          _ 192.168.155.22


F1=HELP    F3=END    F5=APPLS    F6=TERMS    F9=NCPS    F10=LINES
F12=LOGOFF
 OPTIONALLY, ENTER A COMMAND BELOW
 ---->
```

Note: The HOSTIP resource list is by IP address. Names can be used to define a stack. However, once a name has been resolved, the NetSpy screen refers to the stack's IP address.

How to Access

Do one of the following:

- Select option 1 from the TCP/IP Host Management menu
- Enter 10.1.1 from the NetSpy Main Menu
- Enter TCPIPH from the command line of any screen

How to Use

To change or delete a stack, select option 1 or 2 and then select a HOST IP address from the list by entering an "S" to the left of the address you want and press Enter.

Note: The screen defaults to the first HOST IP address in the list.

To add a stack, select option 3 and then enter the TCP/IP HOST address or name in the ADDRESS/NAME= (add only) field.

TCP/IP Host Management Change Menu

This menu lets you change a stack that is currently being monitored.

```
HOST=XE44                                        20JUN2001.171 WED 10:13:31
                        TCP/IP HOST MANAGEMENT - CHANGE

ADDRESS/NAME= 172.16.155.44
TYPE=         I
PORT=         161
COMMNAME=     public
TIMEOUT=      120
CDELAY=       30
RECONN=       6
STACK=        ( Y , Y )
TCP=          ( Y , Y )
UDP=          ( Y , Y )
IF=           ( Y , Y


PFKEYS HAVE BEEN DISABLED EXCEPT FOR PF1,PF3, AND PF12

F1=HELP    F3=END    F5=APPLS    F6=TERMS    F9=NCPS    F10=LINES
F12=LOGOFF
 OPTIONALLY, ENTER A COMMAND BELOW
---->
```

How to Access

Do one of the following:

- Select option 10.1 from the NetSpy Main Menu.
- Enter HOSTIPC from the command line of any screen.

How to Use

Change the values for the fields that are displayed in this menu, except the ADDRESS/NAME= field, and press Enter.

Field	Description
Address=ipaddress Name=hostname	The name or IP address in dot notation form of the host TCP/IP stack to be monitored. NetSpy can monitor up to 15 Host TCP/IP stacks at one time.
TYPE=I|O	Enter the type of the stack: ■ Type I stacks will include IBM enterprise as well as some MIBII data. ■ Type O stacks will include only MIBII data **Default** = TYPE=I
PORT=portnumber	The UDP port number assigned to the SNMP agent. **Default** = 161
COMMNAME= communityname	The community name used on SNMP collection requests. This field is case sensitive. **Default** = public
TIMEOUT=number	The amount of time in seconds that NetSpy will wait for a response from the SNMP agent. **Default** = 5 seconds
CDELAY=number	The amount of time in seconds that NetSpy will wait between SNMP collection requests. **Default** = 30 seconds
RECONN=number	The number of times that NetSpy will attempt to reconnect to the SNMP agent before it terminates monitoring the stack. **Default** = 6 attempts

The following parameters indicate what type of MIB data is to be collected and whether or not the collected data is to be logged. The default is to collect and log all data. The first parameter within the parenthesis is the collection indicator. Valid values are Y for YES to collect or N for NO not to collect. . The second parameter within the parenthesis is the logging indicator. Valid values are Y for YES to log or N for NO not to log. The logging indicator is only valid when the collection indictor is Y.

Parameter	Explanation
STACK=(Y|N, Y|N)	STACK data is an overview of the stack, which includes summary information on all 3 groups. **Default**: STACK=(Y,Y), to collect and log stack data
TCP=(Y|N, Y|N)	TCP connection table data. **Default:** TCP=(Y,Y), to collect and log TCP connection table data
UDP=(Y|N, Y|N)	UDP connection table data **Default**: UDP=(Y,Y), to collect and log UDP connection table data
IF=(Y|N, Y|N)	Interface table data. **Default**: IF=(Y,Y), to collect and log interface table data.

TCP/IP Host Management Add Menu

This menu lets you add a stack that is currently being monitored.

```
HOST=XE44                                          20JUN2001.171 WED 10:13:31
                        TCP/IP HOST MANAGEMENT - Add

ADDRESS/NAME= 192.168.155.22
TYPE=         O
PORT=         161
COMMNAME=     public
TIMEOUT=      120
CDELAY=       30
RECONN=       6
STACK=        ( Y , Y )
TCP=          ( Y , Y )
UDP=          ( Y , Y )
IF=           ( Y , Y


PFKEYS HAVE BEEN DISABLED EXCEPT FOR PF1,PF3, AND PF12

F1=HELP    F3=END    F5=APPLS    F6=TERMS    F9=NCPS    F10=LINES
F12=LOGOFF
 OPTIONALLY, ENTER A COMMAND BELOW
---->
```

How to Access

Do one of the following:

- Select option 3 from the TCP/IP Host Management menu and enter the new ADDRESS/NAME= value in the field ADDRESS/NAME= (add only).
- Enter HOSTIPA ADDRESS= /NAME= from the command line of any screen.

How to Use

Enter new TCP/IP host Management values or use the default values on this menu and press Enter.

TCP/IP Display Menu

This menu lets you specify the type of display and the selection criteria for the related display.

```
HOST=XE44
                      *** TCP/IP DISPLAY MENU ***


SELECT AN OPTION

=====>
SUMMARY DISPLAYS: 1. TCP  2. TCP/VTAM  3. UDP  4. IF  5. TCP/IP STACK
DETAIL DISPLAYS : 6. TCP               7. UDP  8. IF

FOR 1, 2 AND 6 OPTIONALLY SPECIFY SELECTION CRITERIA:(TYPE=I ONLY)
        BYTES SENT/RCVD >          TARGET APPL(TELNET)     =
        REXMTED SEG     >          LU NAME(TELNET)         =
        ROUND TRIP TIME >          AVG HOST RESP(TCP/VTAM) >
        IP ADDRESS      =                     LOCAL PORTID =
        SUBNET          =

SELECT ONE HOSTIP WITH "S" FROM THE LIST BELOW:
 _ 172.16.155.44          _ 192.168.155.22


F1=HELP    F3=END    F5=APPLS    F6=TERMS    F9=NCPS    F10=LINES
F12=LOGOFF
 OPTIONALLY, ENTER A COMMAND BELOW
---->
```

How to Access

Do one of the following:

- Select these menu options:
  1. Select option 10 from the NetSpy Main Menu.
  2. Select option 2 from the TCP/IP Primary Menu.
- Enter TCPIPC from the command line of any screen.

How to Use

Select an Option and a HOST IP address from the list and press Enter. The screen defaults to the first HOST IP address in the list.

- Option 1: For summary TCP connection data
- Option 2: For summary TCP/VTAM integrated connections data
- Option 3: For summary UDP connection data
- Option 4: For summary INTERFACE data
- Option 5: For summary TCP/IP STACK data
- Option 6: For detail TCP connection data
- Option 7: For detail UDP connection data
- Option 8: For detail INTERFACE data

For TCP/IP HOST stacks defined as type I, you may optionally specify selection criteria to limit the data for TCP connection related displays.

Optional VTAM TCP/IP Statistics Parameters

The table below describes the optional parameters you can specify.

Parameter	Description
AVG HOST RESP (VTAM/TCP ONLY)	Displays TCP/IP information for TELNET connections with an AVG HOST RESP time greater than the specified value when VTAM data is available.
BYTES SENT/RECEIVED	Displays TCP/IP information for connections with the number of bytes sent or received greater than the specified value. Specify the value as an integer.
IP ADDRESS|SUBNET	Displays TCP/IP information for connections with a specific IP address or SUBNET. You can specify a generic name. Specifying a SUBNET will limit the display to connections with the same Extended Network Prefix. Specify the extended network prefix in the form: IPADDR/LL. ■ IPADDR is the IP address comprised of the Network Prefix and SUBNET number. **Note:** An asterisk (*) can be used to replace an entire dotted decimal value within the IP address. For example, *.17.*.237/25. ■ LL is the length of the SUBNET mask in bits Valid SUBNET masks are >= 10 and <=30 bits in length. This value cannot be masked and is mandatory. For example, assuming a Class B network with 16 bit network prefix and 6 bit subnet number, the IP addressing would be in the form: `nnnnnnnn.nnnnnnnn.ssssssh.hhhhhhhh` where: **n** represents network bits **s** represents subnet bits **h** represents host bits, The LL or subnet mask length would be 22 (16 network bits plus 6 subnet bits). The subnet mask would be:

Parameter	Description
	Binary: 11111111.11111111.11111100.00000000 Hexidecimal: FF.FF.FC.0 Decimal: 255.255.252.0 In a Class B network with network prefix 128.191 and a subnet mask length of 22: ■ Addresses 128.191.4.1 to 128.191.7.254 would be on the same subnet (subnet 000001) ■ Addresses 128.191.8.1 to 128.191.11.254 would be on another subnet (subnet 000010) Example IP address: 179*, 17?.2* or ??????107.9* Example subnet: 170.*.17.*/25 For information on subnets see IBM's networking manuals, such as IBM's Redbook, The Basics of IP Network Design.
LOCAL PORTID	Displays TCP/IP information for connections with a specific port ID. You can specify a mask using both the asterisk (*) and question mark (?) characters.
LU NAME (TELNET)	Displays TCP/IP information for a TELNET connection with a LU NAME equal to the specified value. Generic Names are allowed.
REXMTED SEG	Displays TCP/IP information for connections with the number of retransmitted segments greater than the specified value. Specify the value as an integer.
ROUND TRIP TIME	Displays TCP/IP information for connections with a round trip time greater than the specified value. Specify the value as an integer representing tenths of a second.
TARGET APPL (TELNET)	Displays TCP/IP information for TELNET connections with a TARGET APPL equal to the specified value. Generic Names are allowed.

NetSpy TCP Connection Summary Display

This screen displays summary performance statistics for individual TCP connections.

The following is a connection summary screen for TCP/IP stacks defined to NetSpy with a host IP of TYPE=I.

```
HOST=XAE1                                    13AUG2001.225 MON 10:04:12  ***
DATA=14:00:41.56    * NETSPY TCP CONNECTION SUMMARY   *     INTERVAL=  4.2M
HOSTIP=172.16.155.44

Resource  Local         Remote            Roundtrip     ReXmt       Bytes
Name       Port     IP-Address   Port    Time     Var             Out     In
FTPD041      21        0.0.0.0      0       0    1500       0       0      0
TCPIP04      23        0.0.0.0      0       0    1500       0       0      0
TCPIP04      24        0.0.0.0      0       0    1500       0       0      0
SMTP         25        0.0.0.0      0       0    1500       0       0      0
PORTMAP     111        0.0.0.0      0       0    1500       0       0      0
INETD9      123        0.0.0.0      0       0    1500       0       0      0
NET         397        0.0.0.0      0       0    1500       0       0      0
D510DIST    446        0.0.0.0      0       0    1500       0       0      0
D610DIST    447        0.0.0.0      0       0    1500       0       0      0
INETD9      513        0.0.0.0      0       0    1500       0       0      0
LPSERVE     515        0.0.0.0      0       0    1500       0       0      0
AME         912        0.0.0.0      0       0    1500       0       0      0
BSB         917        0.0.0.0      0       0    1500       0       0      0
VANDEV99    999        0.0.0.0      0       0    1500       0       0      0
TCPIP04    1023        0.0.0.0      0       0    1500       0       0      0
F1=HELP    F3=END   F5=APPLS   F6=TERMS    F9=NCPS    F10=LINES   F12=LOGOFF
 OPTIONALLY, ENTER A COMMAND BELOW
---->
```

The following is a TCP connection summary screen for TCP/IP stacks defined to NetSpy with a host IP of TYPE=O.

```
HOST=XAE1                                    10AUG2001.222 FRI  9:45:58  ***
 DATA=13:40:24.49    * NETSPY TCP CONNECTION SUMMARY   *  INTERVAL=6.0M
 HOSTIP=192.168.155.22

            Local                       Remote
   IP-Address        Port       IP-Address        Port   State
          0.0.0.0    3638             0.0.0.0       0   listen
          0.0.0.0    4105             0.0.0.0       0   listen
          0.0.0.0    4711             0.0.0.0       0   listen
          0.0.0.0    7000             0.0.0.0       0   listen
          0.0.0.0    8002             0.0.0.0       0   listen
          0.0.0.0    8222             0.0.0.0       0   listen
          0.0.0.0    8223             0.0.0.0       0   listen
          0.0.0.0    8224             0.0.0.0       0   listen
          0.0.0.0   10005             0.0.0.0       0   listen
          0.0.0.0   33004             0.0.0.0       0   listen
          0.0.0.0   33005             0.0.0.0       0   listen
         10.0.0.1    1025             0.0.0.0       0   listen
         10.0.0.1    1025            10.0.0.1    1026   established
         10.0.0.1    1026            10.0.0.1    1025   established
         10.0.0.1    1071            10.0.0.1    4105   established

F1=HELP   F3=END   F5=APPLS   F6=TERMS   F9=NCPS   F10=LINES   F12=LOGOFF
  OPTIONALLY, ENTER A COMMAND BELOW
 ---->
```

How to Access

Do one of the following:

- Select these menu options:
  1. Choose option 10 from the NetSpy Main Menu.
  2. From the TCP/IP Primary Menu, select option 2.
  3. From the TCP/IP Display Menu, select option 1.
- Enter DTCPC from the command line of any screen.

How to Use

To automatically refresh the screen at every base interval, press PF2. To deactivate the refresh mode, press PF2 again. If you require more current data, press enter. If the CDELAY has expired, NetSpy will refresh the data in between intervals.

NetSpy TCP/VTAM Connection Summary Display

This screen displays TCP connection summary data for individual Telnet connections. If NetSpy can match the TCP Telnet connection, the VTAM information will also be displayed. Otherwise the field will be marked as N/A.

This screen is only available for TCP/IP stacks defined to NetSpy with a host IP of TYPE=I.

```
HOST=XAE1                                        13AUG2001.225 MON 10:04:41  ***
DATA=14:00:41.56    *NETSPY TCP/VTAM CONNECTION SUMMARY*     INTERVAL=  4.7M
HOSTIP=172.16.155.44

LU                Remote     Roundtrip     ReXmt    Avg Number       Bytes
Name          IP-Address    Time     Var           Host   Outp     Out     In
--------- APPL NAME = A04ITPXX ---------
A04C0001   10.119.125.55      408      91      21      0      0   80704  1081
A04C0002  10.119.125.231      395      70      20      0      0  448805  5443
A04C0003   10.202.192.96       72      19       0      0   1.2M  766545 48662
--------- APPL NAME = TPXTEST  ---------
A04TZ001    10.119.75.114     287      62       6    N/A    N/A  119834  1579
A04TZ002   10.202.164.104      70      72       0    N/A    N/A    9672  1045
--------- APPL NAME =          ---------
A04TZ003   10.202.164.104     142      49       0    N/A    N/A    2908   172


F1=HELP    F3=END    F5=APPLS    F6=TERMS    F9=NCPS    F10=LINES
F12=LOGOFF
 OPTIONALLY, ENTER A COMMAND BELOW
---->
```

How to Access

Do one of the following:

- Select these menu options:
  1. Choose option 10 from the NetSpy Main Menu.
  2. From the TCP/IP Primary Menu, select option 2.
  3. From the TCP/IP Display Menu, select option 2.
- Enter DTCPV from the command line of any screen.

How to Use

To automatically refresh the screen at every base interval, press PF2. To deactivate the refresh mode, press PF2 again. If you require more current data, press Enter. If the CDELAY has expired, NetSpy will refresh the data in between intervals.

NetSpy UDP Connection Summary Display

This screen displays connection summary for User Datagram Protocol (UDP) information.

UPD connection summary screen for stacks defined to NetSpy with a host IP of TYPE=I.

```
HOST=XAE1                                   13AUG2001.225 MON 10:05:25  ***
DATA=14:05:33.66   * NETSPY UDP CONNECTION SUMMARY   *     INTERVAL=  25.1
HOSTIP=  172.16.155.44

Resource   Local              Local            Dgram            Bytes
Name        Port         IP-Address           In     Out       In     Out
PORTMAP      111            0.0.0.0            0       0        0       0
OSNMPD       161           10.0.0.0         4575    4744     1.5M    1.6M
SNMPQE       162            0.0.0.0            0       0        0       0
NET          397            0.0.0.0            0       0        0       0
ETCRC7       514            0.0.0.0            0       0        0       0
MVSNFSC     1023            0.0.0.0            0       0        0       0
SNMPQE      1026            0.0.0.0            0       0        0       0
SMTP        1030            0.0.0.0            0       0        0       0
FISJA014    1156      172.16.155.44           67      68    56198   53688




F1=HELP   F3=END   F5=APPLS   F6=TERMS   F9=NCPS   F10=LINES   F12=LOGOFF
 OPTIONALLY, ENTER A COMMAND BELOW
---->
```

UDP connection summary screen for TCP/IP stacks defined to NetSpy with a host IP of TYPE=O.

```
HOST=XAE1                                    13AUG2001.225 MON 10:07:02  ***
DATA=14:05:20.76     * NETSPY UDP CONNECTION SUMMARY  *     INTERVAL=  2.0M
HOSTIP=192.168.155.22

           Local
      IP-Address    Port
         0.0.0.0     161
         0.0.0.0     162
         0.0.0.0     514
         0.0.0.0    1026
         0.0.0.0    1031
         0.0.0.0    4104
         0.0.0.0   63000
  192.168.155.22    1085
  192.168.155.22    1090
  192.168.155.22    1091
  192.168.155.22    1100
  192.168.155.22    6162
  192.168.155.22    6665


F1=HELP   F3=END    F5=APPLS    F6=TERMS    F9=NCPS   F10=LINES   F12=LOGOFF
 OPTIONALLY, ENTER A COMMAND BELOW
---->
```

How to Access

Do one of the following:

- Select these menu options:
  1. Choose option 10 from the NetSpy Main Menu.
  2. From the TCP/IP Primary Menu, select option 2.
  3. From the TCP/IP Display Menu, select option 3.
- Enter DUDPC from the command line of any screen.

How to Use

To automatically refresh the screen at every base interval, press PF2. To deactivate the refresh mode, press PF2 again. If more current data is required, press Enter. NetSpy will refresh the data in between intervals if the CDELAY has expired.

NetSpy Interface Summary Display

This screen displays summary interface information. This screen is available for TCP/IP stacks defined to NetSpy as TYPE=I or TYPE=O.

```
HOST=XE44                                    20JUN2001.171 WED 10:18:01  ***
DATA=14:15:21.56     *   NETSPY INTERFACE SUMMARY     *      INTERVAL=  3.0M
HOSTIP=172.16.155.44

  Index Physical Address Interface type and description   Status
      1 NO ADDRESS        53 propVirtual                  1 Up
      2 NO ADDRESS        24 softwareLoopback             1 Up
      3 NO ADDRESS        53 propVirtual                  1 Up
      4 NO ADDRESS       112 Unknown                      1 Up
      5 NO ADDRESS        53 propVirtual                  1 Up
      6 10005AD132F2       6 ethernetCsmacd               1 Up


F1=HELP    F3=END    F5=APPLS    F6=TERMS    F9=NCPS   F10=LINES   F12=LOGOFF
 OPTIONALLY, ENTER A COMMAND BELOW
---->
```

How to Access

Do one of the following:

- Select these menu options:
  1. Choose option 10 from the NetSpy Main Menu.
  2. From the TCP/IP Primary Menu, select option 2.
  3. From the TCP/IP Display Menu, select option 4.
- Enter DIF from the command line of any screen.

How to Use

To automatically refresh the screen at every base interval, press PF2. To deactivate the refresh mode, press PF2 again. If more current data is required, press Enter. NetSpy will refresh the data in between intervals if the CDELAY has expired.

NetSpy Stack Summary Display

This screen displays general HOST TCP/IP information found across the various Management Information Block groups (TCP, UDP, IP). An N/A in a field indicates that IBM enterprise data is not available, which depends upon how the stack is defined to NetSpy and what type of stack is running.

For instance, a host IP address defined to NetSpy as type O (Other) will not display IBM enterprise data even if the stack is IBM's version of TCP/IP.

```
HOST=XE44                                        20JUN2001.171 WED 10:18:47  ***
DATA=14:15:20.19     ***   NETSPY STACK SUMMARY  ***         INTERVAL=  3.8M
HOSTIP=172.16.155.44

 tcpipProcname         TCPIP44     IplDateandTime     20JUN2001 09:25:37:00
 tcpipAsid                 0055
 tcpSendBufferSize        16384    tcpReceiveBufferSize     16384
 tcpMaxConn            DYNAMIC     tcpActiveOpens              60
 tcpCurrEstab                41    tcpPassiveOpens             94
 tcpEstabResets              26
 AttemptFails                69
 tcpInSegs                15776    tcpOutSegs                8111
 tcpInErrs                    0    tcpOutrsts                2030
 tcpRetransSeg              152


(Continued)



F1=HELP    F3=END    F5=APPLS    F6=TERMS    F9=NCPS   F10=LINES   F12=LOGOFF
 OPTIONALLY, ENTER A COMMAND BELOW
---->
```

NetSpy Stack Summary screen continued:

```
HOST=XE44                                        20JUN2001.171 WED 10:19:14  ***
DATA=14:15:20.19     ***    NETSPY STACK SUMMARY   ***       INTERVAL=  4.2M
HOSTIP=172.16.155.44

 udpReceiveBufferSize     65535    udpSendBufferSize        65535
 udpInDatagrams            5225    udpOutDatagrams           5458
 udpInErrors                  0
 udpNoPorts                 724
 ifNumber                     6
 ipForwarding                 2    ipForwDatagrams              0
 ipInReceives             24312    ipInHdrErrors                0
 ipInAddrErrors               0    ipInUnknownProtos            0
 ipInDiscards                 0    ipInDelivers             25422
 ipOutRequests            10248    ipOutDiscards                0
 ipOutNoRoutes                0    ipReasmTimeout              60
 ipReasmReqds                 0    ipReasmOKs                   0
 ipReasmFails                 0    ipFragOKs                    2
 ipFragFails                  0    ipFragCreates                8
 ipRoutingDiscards            0


F1=HELP    F3=END    F5=APPLS    F6=TERMS    F9=NCPS   F10=LINES   F12=LOGOFF
 OPTIONALLY, ENTER A COMMAND BELOW
---->
```

How to Access

Do one of the following:

- Select these menu options:
  1. Choose option 10 from the NetSpy Main Menu.
  2. From the TCP/IP Primary Menu, select option 2.
  3. From the TCP/IP Display Menu, select option 5.
- Enter DTCPS from the command line of any screen.

How to Use

To automatically refresh the screen at every base interval, press PF2. To deactivate the refresh mode, press PF2 again.

NetSpy TCP Connection Detail Display

This screen displays detailed performance statistics for individual TCP connections. For TCP Telnet connection, additional information is displayed. If NetSpy can match the TCP Telnet connection information currently being monitored, the VTAM information will also be displayed. Otherwise the field will be marked as N/A.

This screen is only available for TCP/IP stacks defined to NetSpy with ah host IP of TYPE=I.

```
HOST=XE44                                    20JUN2001.171 WED 10:19:48  ***
DATA=14:15:21.48     * NETSPY TCP CONNECTION DETAIL   *      INTERVAL=  4.8M
HOSTIP=172.16.155.44

Local IP-Address:          0.0.0.0      Remote IP-Address:          0.0.0.0
Local Port:                     21      Remote Port:                      0
ResourceName:             FTPD441       LastActivity:               49.6M



Dupacks:                          0      CongestionWnd:                    0
RoundTripTime:                    0      MaxSndWnd:                        0
RoundTripVariance:             1500      OptMaxSegmentSize :               0
SSThresh:                         0      ReXmt:                            0
RcvdBufSize:                  16384      SendMSS:                        536
BytesIn:                          0      BytesOut:                         0
InBuffered:                       0      OutBuffered:                      0
RUSE


F1=HELP    F3=END    F5=APPLS    F6=TERMS    F9=NCPS   F10=LINES   F12=LOGOFF
 OPTIONALLY, ENTER A COMMAND BELOW
---->
```

```
HOST=XE44                                    20JUN2001.171 WED 10:21:20  ***
DATA=14:20:24.89    * NETSPY TCP CONNECTION DETAIL   *      INTERVAL=  1.3M
HOSTIP=172.16.155.44

Local IP-Address:    172.16.155.44      Remote IP-Address:  172.16.255.255
Local Port:                     24      Remote Port:                 1259
ResourceName:             TCPIP44       LastActivity:                5.5M
TargetAppl (TELNET):     TPXINT         Proto (TELNET):         TN3270
LuName (TELNET):         A44TZ004       ClientUserid (TELNET):
Logmode (TELNET):        SNX32704       Number of Trans (VTAM):          0
Avg resp host (VTAM):            0       Number of Output (VTAM):         0
Dupacks:                          0      CongestionWnd:              13054
RoundTripTime:                  141      MaxSndWnd:                   8760
RoundTripVariance:               87      OptMaxSegmentSize :          1460
SSThresh:                      4096      ReXmt:                           0
RcvdBufSize:                  16384      SendMSS:                     1460
BytesIn:                        577      BytesOut:                   20987
InBuffered:                       0      OutBuffered:                     0
RUSE OOBL


F1=HELP    F3=END    F5=APPLS    F6=TERMS    F9=NCPS   F10=LINES   F12=LOGOFF
 OPTIONALLY, ENTER A COMMAND BELOW
---->
```

How to Access

Do one of the following:

- Select these options:
  1. Choose option 10 from the NetSpy Main Menu.
  2. From the TCP/IP Primary Menu, select option 2.
  3. From the TCP/IP Display Menu, select option 6.
- Enter DTCPCD from the command line of any screen.

How to Use

- Press PF2 to automatically refresh the screen at every base interval.
- Press PF2 again to deactivate the refresh mode.
- Press Enter to display more current data.

  NetSpy will automatically refresh the data in between intervals if the CDELAY has expired.
- Specify the local port IP address and press Enter to display the following Telenet connection display:

NetSpy UDP Connection Detail Display

This screen displays detailed performance statistics for individual UDP connections.

This screen is only available for TCP/IP stacks defined to NetSpy as TYPE=I.

```
HOST=XE44                                      20JUN2001.171 WED 10:20:19  ***
DATA=14:20:24.96     *   NETSPY UDP CONNECTION DETAIL *      INTERVAL=  19.2
HOSTIP=172.16.155.44

Local IP-Address:           0.0.0.0
Local Port:             161

ResourceName:      OSNMPD               LastActivity:          0.00
ResourceID:              26             Subtask:           008FF070

SendLim:              65535             RecvLim:              65535
DgramOut:              1929             DgramIn:               1769
BytesOut:            849997             BytesIn:             798233




F1=HELP    F3=END    F5=APPLS    F6=TERMS   F9=NCPS   F10=LINES   F12=LOGOFF
  OPTIONALLY, ENTER A COMMAND BELOW
 ---->
```

How to Access

Do one of the following:

- Select these menu options:
  1. Choose option 10 from the NetSpy Main Menu.
  2. From the TCP/IP Primary Menu, select option 2.
  3. From the TCP/IP Display Menu, select option 7.
- Enter DUDPD from the command line of any screen.

How to Use

To automatically refresh the screen at every base interval, press PF2. To deactivate the refresh mode, press PF2 again. If more current data is required, press Enter. NetSpy will refresh the data in between intervals if the CDELAY has expired.

NetSpy Interface Detail Display

This screen displays detailed information for individual interfaces to the current stack.

This screen is only available for TCP/IP stacks defined to NetSpy as TYPE=I or TYPE=O.

```
HOST=XE44                                      20JUN2001.171 WED 10:20:38  ***
DATA=14:20:24.99     *    NETSPY INTERFACE DETAIL     *      INTERVAL=  38.6
HOSTIP=172.16.155.44

Index                    1              OperStatus 1 Up
PhysAddress        NO ADDRESS           Type      53 propVirtual
Speed                    0              Mtu                     0
InOctets             38147              OutOctets           38187
InDiscards               0              OutDiscards             0
InErrors                 0              OutErrors               0
InUnknownProtos          0              OutQLen                 0
InUcastPkts            320              OutUcastPkts          323
InNUcastPkts             0              OutNUcastPkts           0
Descr:
Loopback Device




F1=HELP    F3=END    F5=APPLS    F6=TERMS    F9=NCPS   F10=LINES   F12=LOGOFF
 OPTIONALLY, ENTER A COMMAND BELOW
---->
```

How to Access

Do one of the following:

- Select these menu options:
  1. Choose option 10 from the NetSpy Main Menu.
  2. From the TCP/IP Primary Menu, select option 2.
  3. From the TCP/IP Display Menu, select option 8.
- Enter DIFD from the command line of any screen.

How to Use

To automatically refresh the screen at every base interval, press PF2. To deactivate the refresh mode, press PF2 again. If more current data is required, press Enter. NetSpy will refresh the data in between intervals if the CDELAY has expired.

Viewing APPN and MNPS Statistics

The APPN/MNPS Selection Menu allows you to display various performance data related to Advanced Peer-to-Peer Networking (APPN) and multinode persistent sessions (MNPS). After you press the Enter key, you receive a display of the requested statistics.

This chapter contains an example of each screen. See the appendix entitled "**Report and Display Headings**" for an alphabetical listing of column headings and explanations.

Menu and Displays

The following illustration shows the APPN/MNPS Selection Menu and the screens for displaying various types of APPN and MNPS performance data.

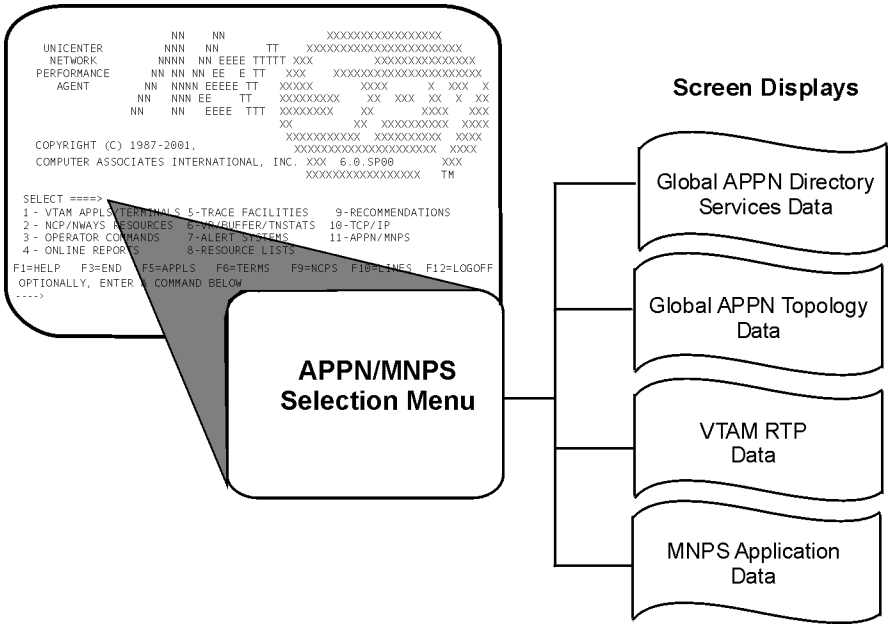

APPN/MNPS Selection Menu

Select option 11 from the NetSpy main menu to display the following menu, which lets you request specific APPN and MNPS statistics.

```
HOST=XE44
                    *** NETSPY APPN/MNPS SELECTION MENU ***

SELECT AN OPTION
====>

          1 - GLOBAL APPN DIRECTORY SERVICES DATA
          2 - GLOBAL APPN TOPOLOGY DATA
          3 - VTAM RTP DATA
          4 - MNPS APPLICATION DATA


F1=HELP   F3=END   F5=APPLS   F6=TERMS   F9=NCPS   F10=LINES   F12=LOGOFF
  OPTIONALLY, ENTER A COMMAND BELOW
---->
```

How to Access

Access in two ways:

- Select option 11 from the NetSpy Main Menu.
- Enter APPNMENU from the command line of any screen.

How to Use

Select the number corresponding to the kind of display you want and press Enter.

Global APPN Directory Services Data Screen

This screen displays statistics on global APPN directory services.

```
HOST=XE44                                        23AUG1999.235 MON 10:37:17 ***
        *** NETSPY GLOBAL APPN DIRECTORY SERVICES DATA ***     INTERVAL=  1.2M

 RESOURCES FOUND                        SEARCH REQUESTS
   LOCAL DATABASE CACHE          60       RESOURCE FOUND     135979
   CENTRAL DIRECTORY SERVER     500       RESOURCE NOT FOUND     80
   DOMAIN BROADCAST              40       NEGATIVE REPLIES        1
   NETWORK BROADCAST              3

 RESOURCES REGISTERED    200            REPLIES FROM ALTERNATE DIRECTORY SERVER
 RESOURCES REMOVED        10              POSITIVE     40      NEGATIVE      4
 ADJACENT NODES            9
 REFERRALS RECEIVED        8            NETWORK BROADCAST NOT PERFORMED     10
 ENTRIES IN CACHE         70            CACHE ENTRIES DISCARDED      2



F1=HELP    F3=END    F5=APPLS    F6=TERMS    F9=NCPS    F10=LINES   F12=LOGOFF
OPTIONALLY, ENTER A COMMAND BELOW
---->
```

How to Access

Do one of the following:

- Choose option 11 from the NetSpy Main Menu. Then, on the APPN/MNPS Selection Menu, choose option 1.
- Enter DDIRS from the command line of any screen.

Global APPN Topology Data Screen

This screen displays statistics on global APPN topology.

```
HOST=XE44                                          23AUG1999.235 MON 10:37:32 ***
           *** NETSPY GLOBAL APPN TOPOLOGY DATA ***             INTERVAL=  1.4M

 DATABASE STATISTICS:                     ROUTES CALCULATED USING:
   CENTRAL DIR SERVER NODES     20          EXISTING TREE     50
   UNIDIRECTIONAL TGs           10          MODIFIED TREE     40
   NETWORK NODES                 3          NEW TREE          10
   END NODES                     3
   VIRTUAL NODES                 8        ROUTE TREE DISCARDED CACHE FULL      4
   INTERCHANGE NODES             2        TREES IN CACHE       8

 TOPOLOGY DATABASE UPDATES (TDUs):        CONNECTIONS:
   ORIGINATED BY THIS NODE      14          NETWORK NODES      3
   PROPOGATED BY THIS NODE       2          END NODES          3
                                            VIRTUAL NODES     12
 TDUS RECEIVED BY THIS NODE:
   RESULT IN DATABASE UPDATE        1     DYNAMIC PU ALLOCATIONS     14
   DISCARDED RSN NOT VALID          2     TG FAILURES      4
   DISCARDED DATA INCONSISTENT      3
   DISCARDED DATA ALREADY SEEN      1


F1=HELP    F3=END    F5=APPLS    F6=TERMS    F9=NCPS    F10=LINES    F12=LOGOFF
 OPTIONALLY, ENTER A COMMAND BELOW
---->
```

How to Access

Do one of the following:

- Choose option 11 from the NetSpy Main Menu. Then, on the APPN/MNPS Selection Menu, choose option 2.
- Enter DTOPO from the command line of any screen.

VTAM RTP Data Screen

This screen displays VTAM data for rapid transit protocol (RTP) dynamic physical units.

```
HOST=XE44      *** NETSPY VTAM RTP DATA ***      08MAY2000.129 MON 14:46:33 ***
                                                              INTERVAL=  1.5M
 PUNAME CNR00001  STATE NORM   LU-LU SESS     0  REMOTE CP  USILDA01.A04X99
 COS    RSETUP    BYTES SENT      0 RCVD      0  PIUS SEG SENT    0% RCVD    0%
 TP     NETWORK   PATH SWITCH ATTEMPTS           BACK PRESSURE APPLIED
                    OPERATOR COMMAND       0       HPR PATH SWITCH       0
                     (%SUCCESSFUL)        N/A      STORAGE SHORTAGE      0
                    LINK/NODE FAILURE      0       Q DEPTH EXCEEDED      0
                     (%SUCCESSFUL)        N/A    ROUND TRIP DELAY   1000
                    OTHER RTP ENDPOINT     0     RETRANSMIT NLPS       0

 PUNAME CNR00002  STATE NORM   LU-LU SESS    28  REMOTE CP  USILDA01.A04X99
 COS    #INTER    BYTES SENT    172 RCVD   3526  PIUS SEG SENT    0% RCVD    0%
 TP     HIGH      PATH SWITCH ATTEMPTS           BACK PRESSURE APPLIED
                    OPERATOR COMMAND       0       HPR PATH SWITCH       0
                     (%SUCCESSFUL)        N/A      STORAGE SHORTAGE      0
                    LINK/NODE FAILURE      0       Q DEPTH EXCEEDED      0
                     (%SUCCESSFUL)        N/A    ROUND TRIP DELAY     23
                    OTHER RTP ENDPOINT     0     RETRANSMIT NLPS       0


F1=HELP    F3=END    F5=APPLS    F6=TERMS    F9=NCPS    F10=LINES    F12=LOGOFF
 OPTIONALLY, ENTER A COMMAND BELOW
---->
```

- Choose option 11 from the NetSpy Main Menu. Then, on the APPN/MNPS Selection Menu, choose option 3.
- Enter DRTP from the command line of any screen.

MNPS Data Screen

This screen displays data on multinode persistent sessions (MNPS).

```
HOST=XE44        *** NETSPY MNPS DATA ***        23AUG1999.235 MON 10:38:06 ***
                                                          INTERVAL=  2.0M
APPLICATION         COUPLING FACILITY            RECOVERY %SUCCESS     RECOVERY
   NAME               WRITES BYTES               SESSIONS  HPR PIPES      TIME
----------COUPLING FACILITY= CF00000000000001  SIZE=  80K %USE=  16 -----------
  CICS0001                 5    160              50.0       100.           1.8
  CICS0002                 5    160              50.0       100.           1.8
----------COUPLING FACILITY= CF00000000000002  SIZE= N/A  %USE= N/A -----------
  CICS0003                 5    160              50.0       100.           1.8
  CICS0004                 5    160              50.0       100.           1.8
  CICS0005                 5    160              50.0       100.           1.8
----------COUPLING FACILITY= CF00000000000003  SIZE=  80K %USE=  16 -----------
----------COUPLING FACILITY= CF00000000000004  SIZE=  80K %USE=  16 -----------
  CICS0006                 5    160              50.0       100.           1.8
  CICS3333                 5    160              50.0       100.           1.8
  CICS7770                 5    160              50.0       100.           1.8
  CICS7771                 5    160              50.0       100.           1.8
  CICS7772                 5    160              50.0       100.           1.8
  CICS7773                 5    160              50.0       100.           1.8
  CICS7774                 5    160              50.0       100.           1.8
  CICS7775                 5    160              50.0       100.           1.8
  CICS7776                 5    160              50.0       100.           1.8
  CICS7777                 5    160              50.0       100.           1.8
  CICS7778                 5    160              50.0       100.           1.8
  CICS7779                 5    160              50.0       100.           1.8
  CICS8880                 5    160              50.0       100.           1.8
  CICS8881                 5    160              50.0       50.0           1.8
  CICS8882                 5    160              75.0       100.           1.8
  CICS8883                 5    160              50.0       100.           1.8
F1=HELP    F3=END    F5=APPLS    F6=TERMS    F9=NCPS    F10=LINES    F12=LOGOFF
 OPTIONALLY, ENTER A COMMAND BELOW
---->
```

How to Access

Do one of the following:

- Choose option 11 from the NetSpy Main Menu. Then, on the APPN/MNPS Selection Menu, choose option 4.
- Enter DMNPS from the command line of any screen.

Chapter 7

The NetSpy Batch History Building Program

NetSpy performance data is now available to Neugents through the NeuPerformance Advisor interface for NetSpy 5.3 and above.

NSYNHIST Program and Its Purpose

The NSYNHIST program is a batch history building program that passes information contained in historical NetSpy log files to the NeuPerformance Advisor product. You can use the NSYNHIST program to process a NetSpy log tape thereby building up historical data quickly, and significantly reducing Neugent training time.

Input File Considerations

The data the NSYNHIST program passes to the NeuPerformance Advisor is taken from the NetSpy logs. For more information about these files, please refer to the chapter "Logging Data" in this manual.

If you are using more than one file as input, sort the combined files prior to running the NSYNHIST utility. Sample JCL for sorting can be found as the first step of the REPORTS member in the NETSPY.CNTL library.

You can include SMF data as input to the NSYNHIST utility, but it must have been dumped from the live SMF data sets to a sequential file on disk or tape. To perform this dump, see member SMFDUMP in the NETSPY.CNTL library.

JCL for NSYNHIST

NSYNHIST is the sample batch JCL that was added to the NETSPY.CNTL data set to execute module NSYNHIST in the NETSPY.LOADLIB.

Use the following batch JCL to run the NSYNHIST program.

```
//STEPX     EXEC   PGM=NSYNHIST,
//                 PARM='SIMULATE',
//                 REGION=0M
//STEPLIB   DD     DSN=netspy.loadlib,
//                 DISP=SHR
//SYSPRINT  DD     SYSOUT=*
//NSYLOG    DD     DSN=netspy.logdump,
//                 DISP=SHR
//SYSIN     DD     *
      control statements
```

Omit the PARM field when the data is to be passed to the NeuPerformance Advisor interface. When PARM='SIMULATE' is specified, no data is passed to the interface.

Control Statements

This section explains each new control statement.

ENTITY=*entity*

entity specifies a one to eight character entity name to be passed to the NeuPerformance Advisor External Data Interface. This value shows up as the *session name* in NeuPerformance Advisor.
The default is NSYMAIN.

ERRLIM=9999999

9999999 specifies a one to seven digit maximum number of error messages written to the console reporting non-zero return codes from the NeuPerformance Advisor External Data Interface. After the specified maximum number of messages are written, future errors are not reported.
The default is 10.

EXCLUDE=(*smf1,smf2,smf3,…smfn*)

smf1,smf2,smf3…smfn specify the one to four character SMF IDs associated with log records that are not to be passed to the NeuPerformance Advisor External Data Interface. If there is only one SMF ID in the list, the parentheses are not needed.
The default is to pass data for every SMF ID.

FILTWARN=YES | NO

YES or NO specifies whether to produce the NSY2103 error message on the console when filtering rejects the data presented to the NeuPerformance Advisor External Data Interface.
The default is NO.

RECORDS=*recordtypes*

recordtypes indicates which record types are passed to the NeuPerformance Advisor External Data Interface. Specify either ALL, for every record type, or a string of characters separated by commas and enclosed in parenthesis. List the record types as defined in the chapter "Log Record Layouts" of the *NetSpy Administrator Guide*.
The default is ALL.

Example: RECORDS=(A,B,V)

SMF#=*nnn*

nnn specifies the SMF record number between 0 and 255 used to collect NetSpy records at your installation. This is set on the SMF, the LOGTYPE, or both parameters in your NetSpy INITPRM member.

SSN=*ssn*

ssn specifies the one to four character subsystem name for the NeuPerformance Advisor External Data Interface.
The default is NEUP.

See the NeuPerformance Advisor documentation for instructions on setting up the subsystem.

Return Codes

This table contains a listing of the NSYNHIST return codes.

Code	Description
0	The NSYNHIST job completed normally.
4	This is a simulate run. Records will not be passed to the NeuPerformance Advisor interface.
8	There is an error in the NSYNHIST control statement syntax.
12	There is a processing error in NSYNHIST – see message NSY21*xx* for details.

Reports

This new report is produced at the completion of the NSYNHIST job. It logs totals for the records and segments, and also shows the processing that was done for each SMF ID or ID in the input file.

```
MM/DD/YYYY HH:MM:SS              NSYNHIST(01/22/01-13.42)- NETSPY HISTORY BUILDER FOR NEUGENTS
 SMF ID   PROCESS FLG RECORDS READ   START DATE AND TIME      END DATE AND TIME     SEGMENT COUNT
  ****                999,999,999 MM/DD/YYYY HH:MM:SS.TH    MM/DD/YYYY HH:MM:SS.TH
-------------------------------------------------------------------------------------------------
  XE44   EXCLUDED     999,999,999 MM/DD/YYYY HH:MM:SS.TH    MM/DD/YYYY HH:MM:SS.TH
-------------------------------------------------------------------------------------------------
  XAE1   SIMULATED    999,999,999 MM/DD/YYYY HH:MM:SS.TH    MM/DD/YYYY HH:MM:SS.TH
       A              999,999,999 MM/DD/YYYY HH:MM:SS.TH    MM/DD/YYYY HH:MM:SS.TH    999,999,999
       B              999,999,999 MM/DD/YYYY HH:MM:SS.TH    MM/DD/YYYY HH:MM:SS.TH    999,999,999
       C              999,999,999 MM/DD/YYYY HH:MM:SS.TH    MM/DD/YYYY HH:MM:SS.TH    999,999,999
       D              999,999,999 MM/DD/YYYY HH:MM:SS.TH    MM/DD/YYYY HH:MM:SS.TH    999,999,999
       E              999,999,999 MM/DD/YYYY HH:MM:SS.TH    MM/DD/YYYY HH:MM:SS.TH    999,999,999
       F              999,999,999 MM/DD/YYYY HH:MM:SS.TH    MM/DD/YYYY HH:MM:SS.TH    999,999,999
       I              999,999,999 MM/DD/YYYY HH:MM:SS.TH    MM/DD/YYYY HH:MM:SS.TH    999,999,999
       J              999,999,999 MM/DD/YYYY HH:MM:SS.TH    MM/DD/YYYY HH:MM:SS.TH    999,999,999
       M              999,999,999 MM/DD/YYYY HH:MM:SS.TH    MM/DD/YYYY HH:MM:SS.TH    999,999,999
       N              999,999,999 MM/DD/YYYY HH:MM:SS.TH    MM/DD/YYYY HH:MM:SS.TH    999,999,999
       P              999,999,999 MM/DD/YYYY HH:MM:SS.TH    MM/DD/YYYY HH:MM:SS.TH    999,999,999
       R              999,999,999 MM/DD/YYYY HH:MM:SS.TH    MM/DD/YYYY HH:MM:SS.TH    999,999,999
       S              999,999,999 MM/DD/YYYY HH:MM:SS.TH    MM/DD/YYYY HH:MM:SS.TH    999,999,999
       T              999,999,999 MM/DD/YYYY HH:MM:SS.TH    MM/DD/YYYY HH:MM:SS.TH    999,999,999
       U              999,999,999 MM/DD/YYYY HH:MM:SS.TH    MM/DD/YYYY HH:MM:SS.TH    999,999,999
```

This table explains the headings found on the NetSpy History Builder For Neugents report.

Heading	Description	
SMF ID	This is the SMF ID (or the ID used in place of the SMF ID) for each different SMF ID found in the input file, and for every record type within that SMF ID. The first line, with SMF ID of ****, represents the totals for all SMF IDs.	
PROCESS FLG	Contains one of three values for each SMF ID found:	
	PROCESSED	Records for this SMF ID have been passed to the NeuPerformance Advisor interface.
	EXCLUDED	Records for this SMF ID have been bypassed due to an EXCLUDE statement.
	SIMULATED	Records have **not** been passed to the NeuPerformance Advisor interface. This is a simulate run, either due to the execution parameter setting of SIMULATE, or errors found in the control statements.
RECORDS READ	Total number of records read for this SMF ID or record type within a given SMF ID.	
START DATE AND TIME	The earliest time stamp read for this SMF ID or record type within a given SMF ID.	
END DATE AND TIME	The latest time stamp read for this SMF ID or record type within a given SMF ID.	
SEGMENT COUNT	The total number of segments processed for a given record type.	

Chapter 8

Displaying Historical Data

You can use NetSpy's historical data displays to view statistics of your network's past activity. You can request this data for one or more NetSpys in your network and view the subsequent reports on one terminal.

Log Files

The logs store the data used to produce these online reports. When you request a report, NetSpy searches the Log or Database for the correct information and then displays it. Data for the historical online displays comes from the Log if it is active. If the Log is not active, but the Database is, data comes from the Database. Data does not come from SMF. If you are using an alternate log file, NetSpy searches this file for the report. For example, you might have stored data from the Log into another file, and you want to request some reports on this stored data. NetSpy issues error messages if it cannot find the alternate log file.

Note: You can read from this alternate log file, but you cannot write to it.

Requesting Cross-NetSpy Data

If you are coordinating data from multiple NetSpys, you can request data from all those in session with your NetSpy by:

- Using the COLLECT command to log data from multiple NetSpys into central logs.
- Using the NETSPY command or operand to access data collected by multiple NetSpys, and then displaying this data online.

For more details about the logging function, see About NetSpy Logs in the chapter "Logging Data."

Notes About the Historical Displays

Note the following about the online reports:

- The HOST ID of the monitored host or the SMF system ID is displayed at the top of each screen.
- Response times you enter are in tenths of seconds.
- On all screens, specifying the time span for the report is optional. You can indicate time with *hh:mm* or *hh:mm:ss*. You can indicate the date in Julian format (*yyyyddd*) or Gregorian format (*ddmmmyyyy*), or by specifying TODAY. To specify the year 2001, enter 01 or 2001.

  The default times and dates used are:

  STARTT=00:00

  STOPT=24:00

  STARTD=date of the oldest record in the current logs at logon

  STOPD=date of the newest record in the current logs at logon.
- Information from different NetSpys is combined on the same display.
- The COMBINE, INTERVAL, and MAX parameters function in the same manner as the COMBINED, INTERVAL, and MAX parameters for batch reports as described in the chapter "Creating Batch Reports."
- Graph and Summary displays are limited to 100 points. If you are running NetSpy in MVS/XA, however, the limit is 200. Consequently, no further data is displayed after this limit is reached. If the limit is inadequate to display your range of data, you can specify a larger INTERVAL parameter to display data that spans a wider time period. Alternatively, you can specify the STARTT and STARTD parameters to produce a display of additional points. The times shown on these displays are beginning-of-interval times.
- Print reports show a maximum of 300 records. No INTERVAL parameter is associated with the print report, but you can specify the STARTT and STARTD parameters to produce a display for the next 300 records. The times shown on these displays are end-of-interval times.

Report Differences

Time Stamps: Time intervals are displayed differently for PRINT reports than for SUMMARY and GRAPH reports. PRINT reports display data based on the time the records were written, or the end of an interval. The data shown is for activity in the *previous* interval (based on the interval parameter in the NetSpy INITPRM member).

SUMMARY and GRAPH reports display time stamps for the *beginning* of the interval that a record was written. The data shown reflects traffic for the interval time following the time stamp.

For example:

> A PRINT report shows user response time for a terminal (LU) at 8:30 (the end of the interval).
>
> A SUMMARY or GRAPH report will show the same user response time for the same LU at 8:15 (the beginning of the interval).

Utilization Statistics: Utilization statistics are calculated differently for PRINT reports than they are for SUMMARY or GRAPH reports. PRINT reports gather utilization data based on the duplex of the line. If the line is half-duplex, calculations are performed on both the *receive* and the *send* byte counts to display one utilization statistic. If the line is full-duplex, separate calculations are performed on the *receive* and *send* byte counts to arrive at *primary* and *secondary* utilizations, respectively.

With SUMMARY and GRAPH reports, separate calculations are always performed on the *receive* and *send* byte counts regardless of the duplex of the line. This will cause a *secondary* utilization to be displayed for half-duplex lines.

Using the Online Reports Facility

To view historical statistics, you specify the kind of report you want on the Online Report Menu, shown in the next section. When you press Enter, you see another menu where you can specify additional parameters. After you complete this menu and press Enter, you see a display of historical statistics on your screen.

If you have multiple NetSpys in your network, you can receive statistics about all of them on your terminal. You have the option of requesting reports on each NetSpy or combining the information from all the NetSpys into one summary report or graph. The NetSpys must be in session with each other for the data to be gathered and sent to your terminal.

The HOSTID parameter allows you to specify the host from which you want to display data.

MAX#NRPT Parameter

The MAX#NRPT initialization parameter limits the storage NetSpy uses when you display reports from other NetSpys. This parameter controls the number of resources you can page through in the historical online reports. Once this maximum number is reached, you no longer can page backwards in the reports. NetSpy issues a warning message before it restricts the paging process. You can find more information about this parameter in the *NetSpy Administrator Guide*.

Function Keys

You can use the following function keys in the online reports facility:

Key	Function
F1	Accesses online help
PA1	Recalls the last explicit command entered
PA2	Recalls the data previously cleared on a menu
F7	Pages backward
F8	Pages forward
CLEAR	Clears data input fields on a menu

Menu Selection

The following illustration shows the various menus for historical displays.

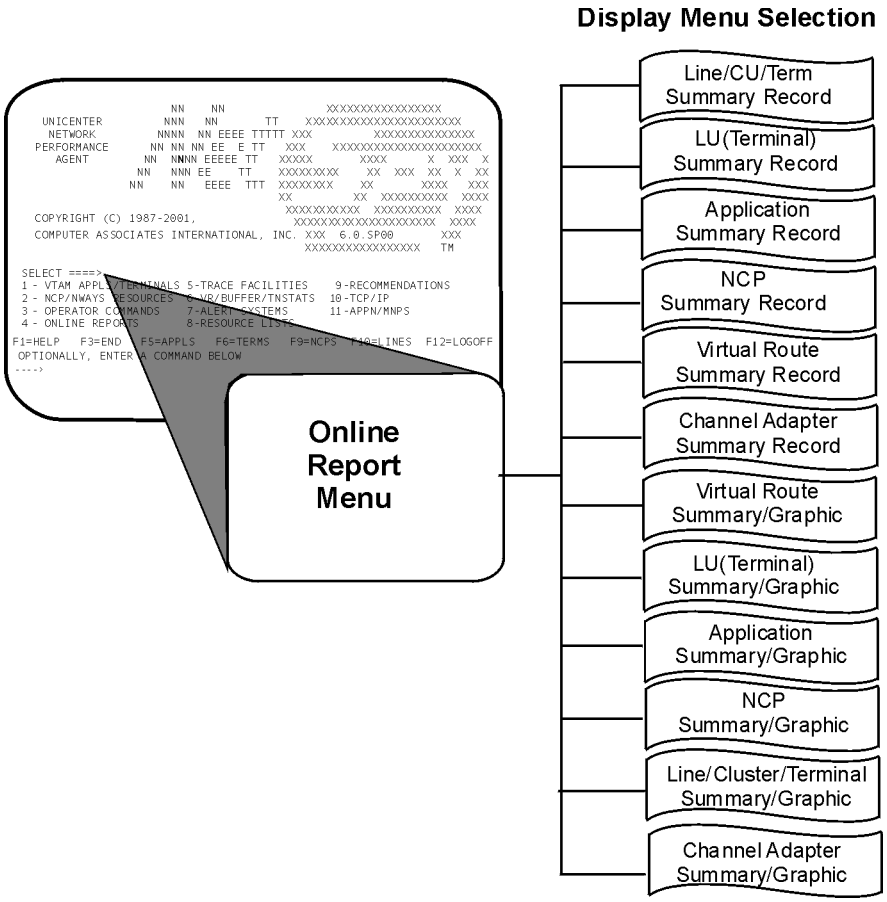

For More Information

This chapter gives an example and explanation of each historical menu. See the appendix entitled "Report and Display Headings" for an alphabetical listing of all headings and explanations.

Online Report Menu

The Online Report Menu lets you select one of three kinds of historical reports:

- Print
- Graph
- Summary

You can specify optional parameters to request reports from an alternate log file or other NetSpys.

```
HOST=IPOX
                    ****** NETSPY ONLINE REPORT MENU ******
 SELECT AN OPTION AND A RESOURCE NAME
 ====>

   1 - PRINT   2 - GRAPH   3 - SUMMARY

 SPECIFY ONE RESOURCE: (GENERIC NAME, RLIST FOR RESOURCE LIST, OR '*' FOR ALL)
 LINE    =          CLUSTER =         SLU     =          X25LINE =
 APPL    =          NCP     =         NCP LU  =          X25PU   =
 VR      =          CA      =         X25STAT =          X25VC   =
 TIC3    =          NTRI    =         ETH     =          FR      =
 BUFFERS =          TCPIP   =

 SELECT ADDITIONAL LOCAL REPORT PARAMETERS:
     ALTERNATE LOG NAME =
     HOSTID =         (GENERIC NAME OR ALL)

 OR SPECIFY NETSPY NAME FOR REPORT: NETSPY=

F1=HELP   F3=END   F5=APPLS   F6=TERMS   F9=NCPS   F10=LINES   F12=LOGOFF
OPTIONALLY, ENTER A COMMAND BELOW
---->
```

How to Access

Access in two ways:

- Select option 4 from the NetSpy Main Menu.
- Enter REPORT from the command line of any screen.

How to Use

Choose the kind of report you want and then enter the name for a specific resource. You then receive a menu of parameters for that particular type of resource.

Options for Online Reports

Option	Description
1 - PRINT	Displays summary records for selected resources. The resources are listed in the order in which they were written to the log.
2 - GRAPH	Displays summary statistics for one parameter for selected resources *in a horizontal bar graph*. For this report, NetSpy sorts the resources and groups their interval data together.
3 - SUMMARY	Displays summary statistics for either one or all parameters for selected resources. For this report, NetSpy sorts the resources and groups their interval data together.

The three types of reports you can choose are described below.

Resources for Online Reports

Name	Description
LINE CLUSTER SLU X25LINE APPL NCP NCP LU X25PU VR CA X25STAT X25VC TIC3 NTRI ETH FR BUFFERS TCPIP	Generic name of the resource for the report. You can specify any of the following values for the *name* or *number* variable: **name|number** Requests a report on the resources matching this generic name. **asterisk (*)** Requests a report on all resources of the particular type. **Note:** NetSpy's X.25, TIC3, NTRI, ETH, FR, and BUFFERS resources do not support resource lists (RLISTs).

You must specify a name for one of the following resources on the menu:

Additional Parameters

The other optional parameters you can specify on the menu are explained below.

Name	Description
ALTERNATE LOG NAME	Name of the file that you want NetSpy to search for report statistics. This file serves as an alternative option to the log. NetSpy does not write data to it; you store data in it that you have transferred from the active log. The alternative log file acts as a *read only* file. If NetSpy cannot find the alternate log file, it issues error messages when it tries to execute the report. **Note:** You can specify either an alternate log file name or a HOSTID or both. On OS/390, you do not have to enclose the name in quotes unless it contains special characters. You can use GDG data sets as the alternate log file in several ways: ■ Enter the GDG data set name with the G*nnnn*V*vvvv* generation and version number extension. ■ Enter the GDG data set name with a relative generation number such as '*datasetname*'(0) or '*datasetname*'(1). The data set name must be enclosed in quotes because it contains parentheses. ■ Enter the GDG data set name without any generation. In this case, all the generations will be concatenated and used as input to the requested report.
HOSTID	The generic name of the host from which you want to display data. When the HOSTID field is left blank, it defaults to this system's host ID. You can specify either an alternate log file name or a HOSTID or both. HOSTID=ALL displays data from all hosts.
NETSPY	Specific or generic name specified on the NSYXNAME parameter in INITPRM of the NetSpys you want included in the report. **Note:** You cannot specify NETSPY name when you specify an alternate log file or HOSTID. If you attempt to specify both, you receive an error message.

Online Report Display Menus

A menu is displayed for the type of resource you selected from the Online Report Menu. Each of these menus is described in detail in the following sections.

Common Parameters

The table below describes parameters that are common to many of the display menus. The remaining parameters are described in their own sections, which follow.

Parameter	Description
STARTT and STOPT	Start and stop times for the report, specified as *hh:mm* or *hh:mm:ss*.
STARTD and STOPD	Start and stop dates for the report, specified as *yyyyddd*, *ddmmmyyyy*, or TODAY (which works as if you specified the current date). To specify the year 2001, type 01 or 2001.
USE OTHER NETSPY(S) LOCAL TIME	The time the data was collected on the other NetSpys specified for inclusion in this report. For example, suppose you are issuing commands from a NetSpy located in Ohio. Your NetSpy is in session with a remote NetSpy in California. You request a report using the information being collected and logged by the NetSpy in California. The time you requested is from 10 a.m. until 2 p.m. If the "Use other NetSpys local time" field is set to "N" or is defaulted, the time of the report will be from 10 a.m. until 2 p.m. Ohio time (E.S.T.). This report would use data collected between 7 a.m. until 11 a.m. California time. If the "Use other NetSpys local time" field is set to "Y", then the report will be from 10 a.m. until 2 p.m. California time.
LU 6.2 SESSIONS	Can have one of the following values: **I** - Displays both LU 6.2 and non-LU 6.2 information. (Default) **E** - Excludes LU 6.2 information from the display. **O** - Displays only information from LU 6.2 sessions.

Parameter	Description
FORAPPL	Displays LU records associated with the specified application. Specify one of the following values for FORAPPL: **name** - Generic name (as explained in Specifying Generic Names in the chapter entitled "Using the Displays") for the application. **RLIST** - Resources defined in the FORAPPL resource list. If you specify RLIST when no resource list has been defined, you receive a warning message. *** (asterisk)** - All known applications. For information on creating default resource lists, see Specifying Resource Lists in the chapter entitled "Using the Displays."
COMBINE	All resources matching the generic name qualifier are combined into one report or graph. If you are reporting on a resource list and you set this variable to Y, the word LIST appears in the report's LINE NAME column for each resource, rather than the resource name. **Note:** Set this parameter to Y when working with a specific line name and a variable from the first group of parameters (on the Line/Cluster/Terminal Summary Graphic Display Menu). This allows you to obtain a graph for the line, instead of a graph for every LU on the line.
INTERVAL	Lets you select a time-reporting interval different from the collecting interval in the NetSpy records. Choose a value larger than the interval in the NetSpy records and specify it in minutes or days. You must specify minutes with a positive integer multiple of the collection interval.
DISPLAY REPORTS ONLY IF MAX	The reports will be displayed only if the highest peak in each report is greater than the value entered. MAX functions as the # TRANSACTIONS parameter when specified with the SUMMARY ALL option for VTAM statistics. MAX functions as the TOTAL BYTES/SECOND parameter when specified with SUMMARY ALL for NCP statistics.

Line/CU/TERM Summary Record Display Menu

This screen lets you specify optional parameters for line, cluster, and NCP LU summary records.

```
HOST=XE44
              *** LINE/CU/TERM SUMMARY RECORD DISPLAY MENU ***

ENTER ONE PARAMETER TO SELECT LU RECORDS TO BE DISPLAYED (FOR LINE/CU/TERM):

    AVERAGE HOST RESP>            NET RESP  >          USER RESP>
    WORST   HOST RESP>            NET RESP  >
    # TRANSACTIONS   >            # MESSAGES>          # BYTES  >
    LU 6.2 SESSIONS  = I (I/E/O)  FORAPPL   =          (NAME, RLIST, OR *)

ENTER ONE PARAMETER TO SELECT LINE/CU/TERM RECORDS TO BE DISPLAYED:

    % UTILIZATION    >           # ERRORS  >          OUT-Q-LEN>
    MESSAGES/MINUTE  >

INDICATE TIME SPAN FOR REPORT:

    STARTT= 00:00:00    STOPT= 24:00:00    STARTD= 10APR2001  STOPD= 17APR2001
    USE OTHER NETSPY(S) LOCAL TIME=    (Y/N)


  F1=HELP  F3=END  F5=APPLS  F6=TERMS  F9=NCPS  F10=LINES  F12=LOGOFF
  OPTIONALLY, ENTER A COMMAND BELOW
  ---->
```

How to Access

From the Online Report Menu, choose the PRINT option and then specify LINE, CLUSTER, or NCP LU.

How to Use

To select a report of an individual variable, choose one variable from either of the following two types:

- An LU-type variable such as response time (first parameter group)
- A line-type variable such as line utilization (second parameter group)

For each record choice, you can enter a threshold value for one parameter, with the exception of the FORAPPL and LU 6.2 SESSIONS parameters. If you specify a value in the FORAPPL and/or LU 6.2 SESSIONS fields, you can choose an additional parameter from the first group. When you specify a parameter threshold, only records *exceeding* that threshold will be displayed.

If you do not indicate a threshold, you receive a report that includes all NCP records matching the generic name entered on the Online Report Menu.

Parameters

Optional parameters on the menu are described below.

Name	Description
AVERAGE HOST, NET, USER RESP	Threshold for the average response time of the host, network, or user for the specified time interval, in tenths of seconds.
WORST HOST, NET RESP	Threshold for the worst response time of the host or network for the specified time interval, in tenths of seconds.
# TRANSACTIONS	Threshold for the number of transactions for the specified time interval.
# MESSAGES	Threshold for the number of messages for the specified time interval.
# BYTES	Threshold for the number of bytes for the specified time interval.
% UTILIZATION	Threshold for line utilization for the specified time interval, in percent.
# ERRORS	Threshold for the number of errors for the specified time interval.
OUT-Q-LEN	Threshold for the outbound queue length (number of messages queued to be output) for the resource within the NCP.
MESSAGES/MINUTE	Threshold for the message traffic rate for the resource.
Other Parameters	See Common Parameters.

LU (Terminal) Summary Record Display Menu

This screen lets you select optional parameters for LU summary records.

```
HOST=XE44
             *** LU (TERMINAL) SUMMARY RECORD DISPLAY MENU ***

 ENTER ONE PARAMETER TO SELECT LU RECORDS TO BE DISPLAYED

   AVERAGE HOST RESP>           NET RESP  >         USER RESP>
   WORST   HOST RESP>           NET RESP  >
   # TRANSACTIONS   >           # MESSAGES>         # BYTES  >
   LU 6.2 SESSIONS  = I (I/E/O) FORAPPL   =         (NAME, RLIST, OR *)

 INDICATE TIME SPAN FOR REPORT:

   STARTT= 00:00:00    STOPT=  24:00:00   STARTD= 10APR2001   STOPD=10APR2001
   USE OTHER NETSPY(S) LOCAL TIME= N   (Y/N)


F1=HELP   F3=END   F5=APPLS   F6=TERMS   F9=NCPS   F10=LINES   F12=LOGOFF
OPTIONALLY, ENTER A COMMAND BELOW
---->
```

How to Access

Select the PRINT and SLU options from the Online Report Menu.

How to Use

Enter a threshold value for one optional parameter, with the exception of the FORAPPL and LU 6.2 SESSIONS parameters. If you specify a value in the FORAPPL and/or LU 6.2 SESSIONS fields, you can enter a value for another parameter as well.

When you specify a parameter threshold, only records *exceeding* that threshold will be displayed.

If you do not indicate a threshold, you receive a report that includes all LU records matching the generic name entered on the Online Report Menu.

Parameters

Optional parameters on the menu are described below.

Name	Description
AVERAGE HOST, NET, USER RESP	Threshold for the average response time of the host, network, or user for the specified time interval, in tenths of seconds.
WORST HOST, NET RESP	Threshold for the worst response time of the host or network for the specified time interval, in tenths of seconds.
# TRANSACTIONS	Threshold for the number of transactions for the specified time interval.
# MESSAGES	Threshold for the number of messages for the specified time interval.
# BYTES	Threshold for the number of bytes for the specified time interval.
Other Parameters	See Common Parameters.

X.25 MCH Line Summary Record Display Menu

This screen lets you select optional parameters for X.25 MCH line summary records.

```
HOST=XE44
            *** X.25 MCH LINE SUMMARY RECORD DISPLAY MENU ***

 ENTER OPTIONS BELOW TO SELECT X.25 MCH LINE RECORDS TO BE DISPLAYED:

   % UTILIZATION   >       OUT-Q-LENGTH  >
   I-FRAMES/MINUTE >

 INDICATE TIME SPAN FOR REPORT:

   STARTT= 00:00:00    STOPT= 24:00:00    STARTD= 10APR2001   STOPD=10APR2001
   USE OTHER NETSPY(S) LOCAL TIME=     (Y/N)


F1=HELP   F3=END   F5=APPLS   F6=TERMS   F9=NCPS   F10=LINES   F12=LOGOFF
OPTIONALLY, ENTER A COMMAND BELOW
---->
```

How to Access

Select the PRINT and X25LINE options from the Online Report Menu.

How to Use

Optionally, enter a threshold and then press Enter. Only records *exceeding* a specified threshold will be displayed.

If you do not indicate a threshold, your report includes all X.25 MCH line summary records matching the generic name entered on the Online Report Menu.

Parameters

Optional parameters on the menu are described below.

Name	Description
% UTILIZATION	Percent of line utilization for the interval.
OUT-Q-LENGTH	Length of the outbound I-frame queue.
I-FRAMES/MINUTE	Rate of information frames transmitted per minute.
Other Parameters	See Common Parameters.

Application Summary Record

This screen lets you select optional parameters for application summary records.

```
HOST=XE44
             *** APPLICATION SUMMARY RECORD DISPLAY MENU ***

 ENTER ONE PARAMETER TO SELECT APPLICATION RECORDS TO BE DISPLAYED

   AVERAGE HOST RESP>           NET RESP   >          USER RESP >
   WORST   HOST RESP>           NET RESP   >
   # TRANSACTIONS   >           # MESSAGES >          # BYTES   >
   LU 6.2 SESSIONS  = I (I/E/O)

 INDICATE TIME SPAN FOR REPORT:

   STARTT= 00:00:00    STOPT=  24:00:00   STARTD= 10APR2001   STOPD=10APR2001
   USE OTHER NETSPY(S) LOCAL TIME=    (Y/N)


F1=HELP   F3=END   F5=APPLS   F6=TERMS   F9=NCPS   F10=LINES   F12=LOGOFF
OPTIONALLY, ENTER A COMMAND BELOW
---->
```

How to Access

From the Online Report Menu, choose the PRINT option and then specify the APPL parameter.

How to Use

Enter a threshold value for *one* optional parameter with the exception of the LU 6.2 SESSIONS parameter. If you specify a value in the LU 6.2 SESSIONS field, you can enter a value for another parameter as well.

When you specify a parameter threshold, only records *exceeding* that threshold will be displayed.

If you do not indicate a threshold, you receive a report that includes all application records matching the generic name entered on the Online Report Menu.

Parameters

Optional parameters on the menu are described below.

Name	Description
AVERAGE HOST, NET, USER RESP	Threshold for the average response time of the host, network, or user for the specified time interval, in tenths of seconds.
WORST HOST, NET RESP	Threshold for the worst response time of the host or network for the specified time interval, in tenths of seconds.
# TRANSACTIONS	Threshold for the number of transactions for the specified time interval.
# MESSAGES	Threshold for the number of messages for the specified time interval.
# BYTES	Threshold for the number of bytes for the specified time interval.
Other Parameters	See Common Parameters.

NCP Summary Record

This screen lets you select optional parameters for the online NCP records.

```
HOST=XE44
                *** NCP SUMMARY RECORD DISPLAY MENU ***

 ENTER ONE PARAMETER TO SELECT NCP RECORDS TO BE DISPLAYED

   % CYCLE UTL.>           %BUFFER UTL.>          CHANNEL-HOLD-Q>


 INDICATE TIME SPAN FOR REPORT:

   STARTT= 00:00:00    STOPT= 24:00:00   STARTD= 10APR2001  STOPD= 10APR2001
   USE OTHER NETSPY(S) LOCAL TIME=    (Y/N)


F1=HELP   F3=END   F5=APPLS   F6=TERMS   F9=NCPS   F10=LINES   F12=LOGOFF
OPTIONALLY, ENTER A COMMAND BELOW
---->
```

How to Access

From the Online Report Menu, choose the PRINT option and then select the NCP parameter.

How to Use

When you specify a parameter threshold, only records *exceeding* that threshold will be displayed.

If you do not indicate a threshold, you receive a report that includes all NCP records matching the generic name entered on the Online Report Menu.

Parameters

Optional parameters on the menu are described below.

Name	Description
% CYCLE UTL.	Threshold for NCP cycle utilization for the specified time interval, in percent.
% BUFFER UTL.	Threshold for NCP buffer utilization for the specified time interval, in percent.
CHANNEL-HOLD-Q	Threshold for the channel hold queue length (the number of messages sent to the host but not yet acknowledged).
Other Parameters	See Common Parameters.

X.25 MCH PU Summary Record

This screen lets you select optional parameters for the online X.25 MCH PU records.

```
HOST=XE44
              *** X.25 MCH PU SUMMARY RECORD DISPLAY MENU ***

 ENTER OPTIONS BELOW TO SELECT X.25 MCH PU RECORDS TO BE DISPLAYED:

   PACKETS/MINUTE  >


 INDICATE TIME SPAN FOR REPORT:

   STARTT= 00:00:00    STOPT= 24:00:00   STARTD= 10APR2001  STOPD= 10APR2001
   USE OTHER NETSPY(S) LOCAL TIME=     (Y/N)


F1=HELP   F3=END   F5=APPLS   F6=TERMS   F9=NCPS   F10=LINES   F12=LOGOFF
OPTIONALLY, ENTER A COMMAND BELOW
---->
```

How to Access

From the Online Report Menu, choose the PRINT option and then select the X25PU parameter.

How to Use

Optionally, enter a threshold for the number of packets per minute, then press Enter. (Only records *exceeding* that threshold will be displayed.) If you do not indicate a threshold, you receive a report that includes all X.25 MCH PU records matching the generic name entered on the Online Report Menu.

Parameters

Optional parameters on the menu are described below.

Name	Description
PACKETS/MINUTE	Threshold for the total number of data packets sent and received per minute.
Other Parameters	See Common Parameters.

Virtual Route Summary Record

This screen lets you select optional parameters for the virtual route summary record display.

```
HOST=XE44
             *** VR (VIRTUAL ROUTE) SUMMARY RECORD DISPLAY MENU ***

 ENTER ONE PARAMETER TO SELECT VR RECORDS TO BE DISPLAYED

   AVERAGE NET RESP >           # OUTBOUND PIUS >
   TOTAL # OF PIUS  >           # INBOUND PIUS  >

   FOR SA =          (SELECT SUBAREA NUMBER BY GENERIC NAME, RLIST, OR *)

 INDICATE TIME SPAN FOR REPORT:

   STARTT= 00:00:00    STOPT= 24:00:00   STARTD= 10APR2001  STOPD= 10APR2001
   USE OTHER NETSPY(S) LOCAL TIME=    (Y/N)


F1=HELP   F3=END   F5=APPLS   F6=TERMS   F9=NCPS   F10=LINES   F12=LOGOFF
OPTIONALLY, ENTER A COMMAND BELOW
---->
```

How to Access

From the Online Report Menu, choose the PRINT option and then select the VR parameter.

How to Use

If you do not want to specify thresholds, a subarea, or times and dates, simply press the Enter key to request your display.

Note: When you specify a parameter threshold, only records exceeding it will be displayed.

Parameters

Optional parameters on the menu are described below.

Name	Description
AVERAGE NET RESP	The average network response time for the specified time interval, in tenths of seconds.
TOTAL # OF PIUS	The total number of inbound and outbound PIUs seen by NetSpy.
# OUTBOUND PIUS	Number of outbound PIUs.
# INBOUND PIUS	Number of inbound PIUs.

Name	Description
FOR SA	The subarea for which you want the report. You can specify one of the following values for the subarea (FOR SA): ***number*** Number or generic name for the destination subarea. **RLIST** Resources defined in the SA resource list. If you specify RLIST when no resource list has been defined, you receive a warning message. *** (asterisk)** All known destination subareas. See the chapter "Technical Overview" in this manual for information on creating default resource lists,
Other Parameters	See Common Parameters.

Channel Adapter Summary Record

This screen lets you select optional parameters for the channel adapter (CA) summary record display.

```
HOST=XE44
              *** CHANNEL ADAPTER SUMMARY RECORD DISPLAY MENU ***

 ENTER ONE PARAMETER TO SELECT CHANNEL ADAPTER RECORDS TO BE DISPLAYED:

   MESSAGES/MINUTE  >
   OUT-Q-LEN        >


 INDICATE TIME SPAN FOR REPORT:

   STARTT= 00:00:00    STOPT= 24:00:00   STARTD= 10APR2001  STOPD= 17APR2001
   USE OTHER NETSPY(S) LOCAL TIME=    (Y/N)



F1=HELP   F3=END   F5=APPLS   F6=TERMS   F9=NCPS   F10=LINES   F12=LOGOFF
OPTIONALLY, ENTER A COMMAND BELOW
---->
```

How to Access

From the Online Report Menu, choose the PRINT option and then select the CA parameter.

How to Use

To generate a CA summary report, enter or change the thresholds as necessary and press the Enter key. Only records *exceeding* any specified threshold will be displayed.

Parameters

Optional parameters on the menu are described below.

Name	Description
MESSAGES/MINUTE	Threshold for the message traffic rate for the resource.
OUT-Q-LEN	Threshold for the outbound queue length (number of messages queued to be output) for the resource within the NCP.
Other Parameters	See Common Parameters.

X.25 Statistics Summary Record

This screen lets you select optional time span parameters for the X.25 statistics summary record display. X.25 statistics include data for:

- X.25 MCH lines
- X.25 MCH physical units
- X.25 virtual circuits

```
HOST=XE44
           *** X.25 STATISTICS SUMMARY RECORD DISPLAY MENU ***

 ENTER OPTIONS BELOW TO SELECT X.25 STATISTICS RECORDS TO BE DISPLAYED:


 INDICATE TIME SPAN FOR REPORT:

   STARTT= 00:00:00    STOPT= 24:00:00   STARTD= 10APR2001  STOPD= 10APR2001
   USE OTHER NETSPY(S) LOCAL TIME=     (Y/N)


F1=HELP   F3=END   F5=APPLS   F6=TERMS   F9=NCPS   F10=LINES   F12=LOGOFF
OPTIONALLY, ENTER A COMMAND BELOW
---->
```

How to Access

From the Online Report Menu, choose the PRINT option and then select the X25STAT parameter. (The X25STAT parameter is valid *only* for the PRINT option.)

How to Use

To generate an X.25 statistics summary report, enter or change the time span parameters as necessary and press the Enter key.

Parameters

Optional parameters on the menu are described in Common Parameters.

X.25 Virtual Circuit Summary Record

This screen lets you select optional parameters for the online X.25 VC (virtual circuit) records.

```
HOST=XE44
                *** X.25 VC SUMMARY RECORD DISPLAY MENU ***

 ENTER OPTIONS BELOW TO SELECT X.25 VC RECORDS TO BE DISPLAYED:

   PACKETS/MINUTE  >


 INDICATE TIME SPAN FOR REPORT:

   STARTT= 00:00:00    STOPT= 24:00:00   STARTD= 10APR2001  STOPD= 10APR2001
   USE OTHER NETSPY(S) LOCAL TIME=     (Y/N)



F1=HELP   F3=END   F5=APPLS   F6=TERMS   F9=NCPS   F10=LINES   F12=LOGOFF
OPTIONALLY, ENTER A COMMAND BELOW
---->
```

How to Access

From the Online Report Menu, choose the PRINT option and then select the X25VC parameter.

How to Use

Optionally, enter a parameter threshold for packets per minute, then press Enter. (Only records *exceeding* that threshold will be displayed.) If you do not indicate a threshold, your report will include all X.25 MCH VC records matching the generic name entered on the Online Report Menu.

Parameters

Optional parameters on the menu are described below.

Name	Description
PACKETS/MINUTE	Threshold for the total number of data packets sent and received per minute
Other Parameters	See Common Parameters.

NCP TIC3 Summary Record

This screen lets you select optional parameters for the online NCP TIC3 records.

```
HOST=XE44
             *** NCP TIC3 SUMMARY RECORD DISPLAY MENU ***

 ENTER ONE PARAMETER TO SELECT TIC3 RECORDS TO BE DISPLAYED:

    BYTES/SECOND     >           I-FRAMES/MINUTE >          TOT FRAMES>
    % RETRANSMITTED  >           UTILIZATION %   >

 INDICATE TIME SPAN FOR REPORT:

   STARTT= 00:00:00    STOPT= 24:00:00   STARTD= 10APR2001  STOPD= 10APR2001
    USE OTHER NETSPY(S) LOCAL TIME= N   (Y/N)



F1=HELP   F3=END    F5=APPLS   F6=TERMS  F9=NCPS   F10=LINES    F12=LOGOFF
OPTIONALLY, ENTER A COMMAND BELOW
 ---->
```

How to Access

From the Online Report Menu, choose the PRINT option and then select the TIC3 parameter.

How to Use

If desired, enter a threshold value for *one* optional parameter and change the default time span for the report. Then, press ENTER. (Only records *exceeding* that threshold will be included in the report.) If you do not indicate a threshold, your report will include all TIC3 records matching the generic name you specified on the Online Report Menu.

Parameters

Optional parameters on the menu are described below

Name	Description
BYTES/SECOND	The total number of bytes sent and received per second
% RETRANSMITTED	The percentage of retransmitted bytes and/or frames
I-FRAMES/MINUTE	Rate of information frames transmitted per minute
UTILIZATION %	Percentage of TIC3 resource utilization
TOT FRAMES	The total number of frames sent and received during the interval
Other Parameters	See Common Parameters.

NCP NTRI Summary Record

This screen lets you select optional parameters for the online NCP NTRI records.

```
HOST=XE44
                  *** NCP NTRI SUMMARY RECORD DISPLAY MENU ***

 ENTER ONE PARAMETER TO SELECT NTRI RECORDS TO BE DISPLAYED:

    %TIC UTILIZATION >           I-FRAMES/MINUTE >          OUT-Q-LEN >
    CONGESTION COUNT >

 INDICATE TIME SPAN FOR REPORT:

   STARTT= 00:00:00    STOPT= 24:00:00   STARTD= 10APR2001  STOPD= 10APR2001
    USE OTHER NETSPY(S) LOCAL TIME= N   (Y/N)


F1=HELP    F3=END    F5=APPLS    F6=TERMS    F9=NCPS    F10=LINES
F12=LOGOFF
OPTIONALLY, ENTER A COMMAND BELOW
 ---->
```

How to Access

From the Online Report Menu, choose the PRINT option and then select the NTRI parameter.

How to Use

If desired, enter a threshold value for *one* optional parameter and change the default time span for the report. Then, press ENTER. (Only records *exceeding* that threshold will be included in the report.) If you do not indicate a threshold, your report will include all NTRI records matching the generic name you specified on the Online Report Menu.

Parameters

Optional parameters on the menu are described below.

Name	Description
%TIC UTILIZATION	The percentage of TIC utilization
CONGESTION COUNT	The number of frames that matched the network address but could not obtain buffer space
I-FRAMES/MINUTE	Rate of information frames transmitted per minute
OUT-Q-LEN	Length of the outbound I-frame queue
Other Parameters	See Common Parameters.

NCP Ethernet Summary Record

This screen lets you select optional parameters for the online NCP Ethernet records.

```
HOST=XE44
                *** NCP ETHERNET SUMMARY RECORD DISPLAY MENU ***

 ENTER ONE PARAMETER TO SELECT ETHERNET RECORDS TO BE DISPLAYED:

    COLLISIONS       >          I-FRAMES/MINUTE  >          OUT-Q-LEN >
    CONGESTION COUNT >          DISCARDED FRAMES >

 INDICATE TIME SPAN FOR REPORT:

   STARTT= 00:00:00    STOPT= 24:00:00   STARTD= 10APR2001  STOPD= 10APR2001
   USE OTHER NETSPY(S) LOCAL TIME= N   (Y/N)


 F1=HELP    F3=END    F5=APPLS    F6=TERMS    F9=NCPS    F10=LINES
F12=LOGOFF
  OPTIONALLY, ENTER A COMMAND BELOW
 ---->
```

How to Access

From the Online Report Menu, choose the PRINT option and then select the ETH parameter.

How to Use

If desired, enter a threshold value for *one* optional parameter and change the default time span for the report. Then, press ENTER. (Only records *exceeding* that threshold will be included in the report.) If you do not indicate a threshold, your report will include all Ethernet records matching the generic name you specified on the Online Report Menu.

Parameters

Optional parameters on the menu are described below.

Name	Description
COLLISIONS	The total number of single and multiple collisions
CONGESTION COUNT	The number of frames that matched the network address but could not obtain buffer space
I-FRAMES/MINUTE	Rate of information frames transmitted per minute
DISCARDED FRAMES	Number of IP frames discarded during the interval
OUT-Q-LEN	Length of the outbound I-frame queue
Other Parameters	See Common Parameters.

NCP Frame Relay Summary Record

This screen lets you select optional parameters for the online NCP Frame Relay records.

```
HOST=XE44
             *** NCP FRAME RELAY SUMMARY RECORD DISPLAY MENU ***

 ENTER ONE PARAMETER TO SELECT FRAME RELAY RECORDS TO BE DISPLAYED:

    FRAMES DISCARDED >           I-FRAMES/MINUTE >          OUT-Q-LEN >
    CONGESTION COUNT >

 INDICATE TIME SPAN FOR REPORT:

   STARTT= 00:00:00    STOPT= 24:00:00   STARTD= 10APR2001  STOPD= 10APR2001
    USE OTHER NETSPY(S) LOCAL TIME= N   (Y/N)


F1=HELP   F3=END   F5=APPLS   F6=TERMS   F9=NCPS   F10=LINES   F12=LOGOFF
OPTIONALLY, ENTER A COMMAND BELOW
 ---->
```

How to Access

From the Online Report Menu, choose the PRINT option and then select the FR parameter.

How to Use

If desired, enter a threshold value for *one* optional parameter and change the default time span for the report. Then, press ENTER. (Only records *exceeding* that threshold will be included in the report.) If you do not indicate a threshold, your report will include all Frame Relay records matching the generic name you specified on the Online Report Menu.

Parameters

Optional parameters on the menu are described below.

Name	Description
FRAMES DISCARDED	Number of frames discarded during the interval. Valid for PLINK, LMI, and FRSE resources only
CONGESTION COUNT	The number of frames that matched the network address but could not obtain buffer space
I-FRAMES/MINUTE	Rate of information frames transmitted per minute
OUT-Q-LEN	Length of the outbound I-frame queue
Other Parameters	See Common Parameters.

Buffers Summary Record

This screen lets you select optional parameters for the online Buffer records.

```
HOST=XE44
                  *** BUFFERS SUMMARY RECORD DISPLAY MENU ***


 INDICATE TIME SPAN FOR REPORT:

   STARTT= 00:00:00    STOPT= 24:00:00   STARTD= 10APR2001  STOPD= 10APR2001
    USE OTHER NETSPY(S) LOCAL TIME= N   (Y/N)


F1=HELP    F3=END    F5=APPLS    F6=TERMS    F9=NCPS    F10=LINES
F12=LOGOFF
  OPTIONALLY, ENTER A COMMAND BELOW
 ---->
```

How to Access

From the Online Report Menu, choose the PRINT option and then select the BUFFERS parameter.

How to Use

If desired, change the default time span for the report. Then, press ENTER.

Parameters

Optional parameters on the menu are described in Common Parameters.

Line/Cluster/ Terminal Summary/Graphic

This screen lets you select parameters for line, cluster, and NCP LU summary or graphic displays.

```
HOST=XE44
          *** LINE/CLUSTER/TERMINAL SUMMARY/GRAPHIC DISPLAY MENU ***

 SELECT A VARIABLE BELOW OR ENTER "ALL" TO SUMMARIZE ALL VTAM STATS:     (ALL)
   AVERAGE HOST RESP=     (Y/N)   NET RESP  =     (Y/N)   USER RESP=     (Y/N)
   WORST   HOST RESP=     (Y/N)   NET RESP  =     (Y/N)
   # TRANSACTIONS   =     (Y/N)   # MESSAGES=     (Y/N)   # BYTES  =     (Y/N)
   LU 6.2 SESSIONS  = I   (I/E/O) FORAPPL   =             (NAME, RLIST, OR *)

 SELECT A VARIABLE BELOW OR ENTER "ALL" TO SUMMARIZE ALL NCP STATS:      (ALL)
   % UTILIZATION    =     (Y/N)   # ERRORS  =     (Y/N)   OUT-Q-LEN=     (Y/N)
   MESSAGES/MINUTE  =     (Y/N)

 SELECT FURTHER GRAPH/SUMMARY PARAMETERS:
   COMBINE=     (Y/N)                   (AVG/SUM FOR DIFFERENT RESOURCES)
   INTERVAL=MINS(       )/DAYS(      )  DISPLAY REPORT(S) ONLY IF MAX >


 INDICATE TIME SPAN FOR REPORT:
   STARTT= 00:00:00    STOPT= 24:00:00   STARTD= 10APR2001  STOPD= 10APR2001
   USE OTHER NETSPY(S) LOCAL TIME= N  (Y/N)

F1=HELP   F3=END   F5=APPLS   F6=TERMS   F9=NCPS   F10=LINES   F12=LOGOFF
OPTIONALLY, ENTER A COMMAND BELOW
---->
```

How to Access

From the Online Report Menu, choose either the GRAPH or SUMMARY option and the LINE, CLUSTER, or NCP LU parameter.

How to Use

You can select a report of one of two types of variables, or you can choose to summarize all VTAM statistics or all NCP statistics. The ALL option works *only* for the summary report.

To select a report of an individual variable, choose one variable from either of the following two types:

- An LU-type variable such as response time (first parameter group)
- A line-type variable such as line utilization (second parameter group).

For each report, you must enter Y or N for only *one* parameter from the first two groups, with the exception of the FORAPPL and LU 6.2 SESSIONS parameters. If you specify a value in the FORAPPL and/or LU 6.2 SESSIONS fields, you can choose an additional parameter from the first group as well. You can select further optional parameters for the graph and summary displays from the third and fourth groups of parameters.

Parameters

Parameters on the menu are described below.

Name	Description
AVERAGE HOST, NET, USER RESP	Average response time of the host, network, or user for the time interval, in tenths of seconds.
WORST HOST, NET RESP	Worst response time of the host or network for the time interval, in tenths of seconds.
# TRANSACTIONS	Number of transactions for the time interval.
# MESSAGES	Number of messages for the time interval.
# BYTES	Number of bytes for the time interval.
% UTILIZATION	Line utilization for the time interval, in percent.
MESSAGES/MINUTE	The message traffic rate for the resource.
# ERRORS	Number of errors for the time interval.
OUT-Q-LEN	Outbound queue length (# of messages queued for output) for the NCP resource.
DISPLAY REPORT(S) ONLY IF MAX	The reports will be displayed only if the highest peak in each report is greater than the value entered. MAX functions as the # TRANSACTIONS parameter when specified with the SUMMARY ALL option for VTAM statistics. MAX functions as the TOTAL BYTES/SECOND parameter when specified with SUMMARY ALL for NCP statistics.
Other Parameters	See Common Parameters.

LU (Terminal) Summary/Graphic

This screen lets you select parameters for LU summary or graphic displays or to select the SUMMARY ALL option for a summary display of all parameters associated with the resource. The ALL option is valid *only* for the summary report.

```
HOST=XE44
             *** LU (TERMINAL) SUMMARY/GRAPHIC DISPLAY MENU ***

 SELECT ONE VARIABLE BELOW OR ENTER "ALL" FOR SUMMARY:       (ALL)
   AVERAGE HOST RESP=     (Y/N)   NET RESP  =     (Y/N)   USER RESP=     (Y/N)
   WORST   HOST RESP=     (Y/N)   NET RESP  =     (Y/N)
   # TRANSACTIONS   =     (Y/N)   # MESSAGES=     (Y/N)   # BYTES  =     (Y/N)
   LU 6.2 SESSIONS  = I   (I/E/O) FORAPPL   =     (NAME, RLIST, OR *)

 SELECT FURTHER GRAPH/SUMMARY PARAMETERS:

   COMBINE=     (Y/N)                    (AVG/SUM DATA FOR DIFFERENT LUS)
   INTERVAL=MINS(       )/DAYS(      )  DISPLAY REPORT(S) ONLY IF MAX >

 INDICATE TIME SPAN FOR REPORT:

   STARTT= 00:00:00    STOPT= 24:00:00   STARTD= 10APR2001  STOPD= 10APR2001
   USE OTHER NETSPY(S) LOCAL TIME=    (Y/N)


F1=HELP   F3=END   F5=APPLS   F6=TERMS   F9=NCPS   F10=LINES   F12=LOGOFF
OPTIONALLY, ENTER A COMMAND BELOW
---->
```

How to Access

From the Online Report Menu, choose the GRAPH or SUMMARY option, then specify the SLU parameter.

How to Use

To use the SUMMARY ALL option, enter ALL beside the first prompt.

To request a report of an individual variable, you must enter a value (either Y or N) for one parameter *only* from the first group, with the exception of the FORAPPL and LU 6.2 SESSIONS parameters. If you specify a value in the FORAPPL and/or LU 6.2 SESSIONS fields, you can choose an additional parameter from the first group.

You can select additional parameters for the graph and summary displays from the second and third groups of parameters.

Parameters

Parameters on the menu are described below.

Name	Description
AVERAGE HOST, NET, USER RESP	Average response time of the host, network, or user for the specified time interval, in tenths of seconds.
WORST HOST, NET RESP	Worst response time of the host or network for the specified time interval, in tenths of seconds.
# TRANSACTIONS	Number of transactions for the specified time interval.

Name	Description
# MESSAGES	Number of messages for the specified time interval.
# BYTES	Number of bytes for the specified time interval.
DISPLAY REPORT(S) ONLY IF MAX	The reports will be displayed only if the highest peak in each report is greater than the value entered. MAX functions the as # TRANSACTIONS parameter when you specify it with the SUMMARY ALL option.
Other Parameters	See Common Parameters.

X.25 MCH Line Summary/Graphic

This screen lets you select optional parameters for X.25 MCH line summary or graphic displays or to select the SUMMARY ALL option for a summary display of all parameters associated with the resource. The ALL option is valid *only* for the summary report.

```
HOST=XE44
              *** X.25 MCH LINE SUMMARY/GRAPHIC DISPLAY MENU ***

 SELECT A VARIABLE BELOW OR ENTER "ALL" TO SUMMARIZE ALL NCP STATS:     (ALL)
   % UTILIZATION    =     (Y/N)  OUT-Q-LEN =      (Y/N)
   I-FRAMES/MINUTE  =     (Y/N)


 SELECT FURTHER GRAPH/SUMMARY PARAMETERS:
   COMBINE=     (Y/N)                    (AVG/SUM FOR DIFFERENT RESOURCES)
   INTERVAL=MINS(      )/DAYS(      )  DISPLAY REPORT(S) ONLY IF MAX >

 INDICATE TIME SPAN FOR REPORT:

   STARTT= 00:00:00    STOPT= 24:00:00   STARTD= 10APR2001  STOPD= 10APR2001
   USE OTHER NETSPY(S) LOCAL TIME=     (Y/N)


F1=HELP   F3=END   F5=APPLS   F6=TERMS   F9=NCPS   F10=LINES   F12=LOGOFF
OPTIONALLY, ENTER A COMMAND BELOW
---->
```

How to Access

On the Online Report Menu, select the GRAPH or SUMMARY option and specify the X25LINE parameter, then press Enter.

How to Use

To use the SUMMARY ALL option, enter ALL beside the first prompt.

To request a report of an individual variable, you must enter a value (either Y or N) for one parameter *only* from the first group. You can select additional parameters for the graph and summary displays from the second and third groups of parameters.

Parameters

Optional parameters on the menu are described below.

Name	Description
% UTILIZATION	Percent of line utilization for the interval.
OUT-Q-LENGTH	Length of the outbound I-frame queue.
I-FRAMES/MINUTE	Rate of information frames transmitted per minute.
DISPLAY REPORT(S) ONLY IF MAX	The reports will be displayed only if the highest peak in each report is greater than the value entered. If you request a SUMMARY ALL report, the MAX parameter refers to bytes per second.
Other Parameters	See Common Parameters.

Application Summary/Graphic

This screen lets you select parameters for the application summary or graphic display or to select the SUMMARY ALL option for a summary display of all parameters associated with the application. The ALL option is valid *only* for the summary report.

```
HOST=XE44
             *** APPLICATION SUMMARY/GRAPHIC DISPLAY MENU ***

 SELECT ONE VARIABLE BELOW OR ENTER "ALL" FOR SUMMARY:       (ALL)
   AVERAGE HOST RESP=     (Y/N)   NET RESP  =     (Y/N)   USER RESP=     (Y/N)
   WORST   HOST RESP=     (Y/N)   NET RESP  =     (Y/N)
   # TRANSACTIONS   =     (Y/N)   # MESSAGES=     (Y/N)   # BYTES  =     (Y/N)
   LU 6.2 SESSIONS  = I   (I/E/O) TRANS GRP = N   (Y/N)

 SELECT FURTHER GRAPH/SUMMARY PARAMETERS:
   COMBINE=     (Y/N)                    (AVG/SUM DATA FOR DIFFERENT APPLS)
   INTERVAL=MINS(       )/DAYS(      )  DISPLAY REPORT(S) ONLY IF MAX >

 INDICATE TIME SPAN FOR REPORT:
   STARTT= 00:00:00    STOPT= 24:00:00   STARTD= 10APR2001  STOPD= 10APR2001
   USE OTHER NETSPY(S) LOCAL TIME= N  (Y/N)


F1=HELP   F3=END   F5=APPLS   F6=TERMS   F9=NCPS   F10=LINES   F12=LOGOFF
OPTIONALLY, ENTER A COMMAND BELOW
---->
```

How to Access

From the Online Report Menu, choose either the GRAPH or SUMMARY option and specify the APPL parameter, then press Enter.

How to Use

To use the SUMMARY ALL option, enter ALL beside the first prompt.

To request a report of an individual variable, you must specify *only one* parameter from the first group of parameters on the menu, with the exceptions of the LU 6.2 SESSIONS and TRANS GRP parameters. If you specify a value in one or both of these fields, you can enter a value for another parameter as well.

You can select additional parameters for the graph and summary displays from the second and third groups of parameters.

Parameters

Parameters on the menu are described below.

Name	Description
AVERAGE HOST, NET, USER RESP	Average response time of the host, network, or user for the specified time interval, in tenths of seconds.
WORST HOST, NET RESP	Worst response time of the host or network for the specified time interval, in tenths of seconds.
# TRANSACTIONS	Number of transactions for the specified time interval.
# MESSAGES	Number of messages for the specified time interval.
# BYTES	Number of bytes for the specified time interval.
TRANS GRP	Indicates whether to display only applications (with a N value) or only transaction groups (with a Y value). The default is N.
DISPLAY REPORT(S) ONLY IF MAX	The reports will be displayed only if the highest peak in each report is greater than the value entered. MAX functions as the # TRANSACTIONS parameter when you specify it with the SUMMARY ALL option.
Other Parameters	See Common Parameters.

NCP Summary/Graphic

This screen lets you select parameters for the NCP summary or graphic display or to select the SUMMARY ALL option for a summary display of all parameters associated with the NCP resource. The ALL option is valid *only* for the summary report.

```
HOST=XE44
                *** NCP SUMMARY/GRAPHIC DISPLAY MENU ***

 SELECT ONE VARIABLE BELOW OR ENTER "ALL" FOR SUMMARY:       (ALL)

   % CYCLE UTL.=     (Y/N)  % BUFFER UTL=     (Y/N)  CHANNEL-HOLD-Q=     (Y/N)


 SELECT FURTHER GRAPH/SUMMARY PARAMETERS:

   COMBINE=     (Y/N)                    (AVG/SUM DATA FOR DIFFERENT NCPS)
   INTERVAL=MINS(       )/DAYS(      )  DISPLAY REPORT(S) ONLY IF MAX >

 INDICATE TIME SPAN FOR REPORT:
   STARTT= 00:00:00    STOPT= 24:00:00   STARTD= 10APR2001  STOPD= 10APR2001
   USE OTHER NETSPY(S) LOCAL TIME=    (Y/N)


F1=HELP   F3=END   F5=APPLS   F6=TERMS   F9=NCPS   F10=LINES   F12=LOGOFF
OPTIONALLY, ENTER A COMMAND BELOW
---->
```

How to Access

From the Online Report Menu, choose the SUMMARY or GRAPH option, specify NCP parameter, then press Enter.

How to Use

To use the SUMMARY ALL option, you enter ALL beside the first prompt.

To request a report of an individual variable, you must specify *only* one variable from the first group of variables on the menu.

You can select additional variables for the graph and summary displays from the second and third groups of variables.

Parameters

Parameters on the menu are described below.

Name	Description
% CYCLE UTL.	NCP cycle utilization for the specified time interval, in percent.
% BUFFER UTL.	NCP buffer utilization for the specified time interval, in percent.
CHANNEL-HOLD-Q	Channel hold queue length (the number of messages sent to the host but not yet acknowledged).
DISPLAY REPORT(S) ONLY IF MAX	The reports will be displayed only if the highest peak in each report is greater than the value entered. MAX functions as the % CYCLE UTILIZATION parameter when you specify it with the SUMMARY ALL option.
Other Parameters	See Common Parameters.

X.25 MCH PU Summary/Graphic

This screen lets you select parameters for the X.25 MCH PU summary or graphic display or to select the SUMMARY ALL option for a summary display of all parameters associated with the X.25 MCH PU resource. The ALL option is valid *only* for the summary report.

```
HOST=XE44
              *** X.25 MCH PUS SUMMARY/GRAPHIC DISPLAY MENU ***

 SELECT A VARIABLE BELOW OR ENTER "ALL" TO SUMMARIZE ALL NCP STATS:      (ALL)
   PACKETS/MINUTE   =     (Y/N)

 SELECT FURTHER GRAPH/SUMMARY PARAMETERS:
   COMBINE=     (Y/N)                   (AVG/SUM FOR DIFFERENT RESOURCES)
   INTERVAL=MINS(      )/DAYS(      )  DISPLAY REPORT(S) ONLY IF MAX >

 INDICATE TIME SPAN FOR REPORT:
   STARTT= 00:00:00    STOPT= 24:00:00   STARTD= 10APR2001  STOPD= 10APR2001
   USE OTHER NETSPY(S) LOCAL TIME=     (Y/N)


F1=HELP   F3=END   F5=APPLS   F6=TERMS   F9=NCPS   F10=LINES   F12=LOGOFF
OPTIONALLY, ENTER A COMMAND BELOW
---->
```

How to Access

From the Online Report Menu, choose the SUMMARY or GRAPH option, specify the X25PU parameter, and then press Enter.

How to Use

- To use the SUMMARY ALL option, enter ALL beside the first prompt.
- Select Y or N for packets per minute.
- You can select additional variables for the graph and summary displays from the second and third groups of variables.

Parameters

Parameters on the menu are described below.

Name	Description
PACKETS/MINUTE	Total number of data packets sent and received per minute.
DISPLAY REPORT(S) ONLY IF MAX	The reports will be displayed only if the highest peak in each report is greater than the value entered. When requesting a SUMMARY ALL report, the MAX value refers to packets per minute.
Other Parameters	See Common Parameters.

Virtual Route Summary/Graphic

This screen lets you select parameters for a virtual route summary or graphic display, or to select the SUMMARY ALL option for a summary display of all parameters associated with the resource. The ALL option is valid *only* for the summary report.

```
HOST=XE44
             *** VR (VIRTUAL ROUTE) SUMMARY/GRAPHIC DISPLAY MENU ***

 SELECT ONE VARIABLE BELOW OR ENTER "ALL" FOR SUMMARY:   (ALL)
   AVERAGE NET RESP =     (Y/N)        # OUTBOUND PIUS =    (Y/N)
   TOTAL # OF PIUS  =     (Y/N)        # INBOUND PIUS  =    (Y/N)
   FOR SA =        (SELECT SUBAREA NUMER BY GENERIC NAME, RLIST, OR *)

 SELECT FURTHER GRAPH/SUMMARY PARAMETERS:
   COMBINE=     (Y/N)                  (AVG/SUM DATA FOR DIFFERENT VRS)
   INTERVAL=MINS(      )/DAYS(      )  DISPLAY REPORT(S) ONLY IF MAX >

 INDICATE TIME SPAN FOR REPORT:
   STARTT= 00:00:00    STOPT= 24:00:00   STARTD= 10APR2001  STOPD= 10APR2001
   USE OTHER NETSPY(S) LOCAL TIME=    (Y/N)


F1=HELP   F3=END   F5=APPLS   F6=TERMS   F9=NCPS   F10=LINES   F12=LOGOFF
OPTIONALLY, ENTER A COMMAND BELOW
---->
```

How to Access

From the Online Report Menu, choose the SUMMARY or GRAPH option, specify the VR parameter, then press Enter.

How to Use

To use the SUMMARY ALL option, enter ALL on the top line of the menu. To request a report on an individual variable, specify AVERAGE NET RESP or NUMBER OF PIUS.

You have the option of selecting a specific subarea by entering the subarea number in the FOR SA field.

You can specify additional parameters from the second and third groups of parameters on the screen.

Parameters

Parameters on the menu are described below.

Name	Description
AVERAGE NET RESP	The average network response time for the specified time interval, in tenths of seconds
TOTAL # OF PIUS	The total number of inbound and outbound path information units (PIUs) recorded by NetSpy
# OUTBOUND PIUS	Number of outbound PIUs
# INBOUND PIUS	Number of inbound PIUs

Name	Description
FOR SA	The subarea for which you want the report. You can specify one of the following values for the subarea (FOR SA): ***number*** Number or generic name for the destination subarea. **RLIST** Resources defined in the SA resource list. If you specify RLIST when no resource list has been defined, you receive a warning message. *** (asterisk)** All known destination subareas. For information on creating default resource lists, see Specifying Resource Lists in the chapter entitled "Using the Displays."
Other Parameters	See Common Parameters.

Channel Adapter Summary/Graphic

This screen lets you select parameters for a channel adapter summary or graphic display, or to select the SUMMARY ALL option for a summary display of all parameters associated with the resource. The ALL option is valid with the summary report *only*.

```
HOST=XE44
          *** CHANNEL ADAPTER SUMMARY/GRAPHIC DISPLAY MENU ***

 SELECT A VARIABLE BELOW OR ENTER "ALL" TO SUMMARIZE ALL NCP STATS:   (ALL)
   MESSAGES/MINUTE  =     (Y/N)
   OUT-Q-LEN        =     (Y/N)

 SELECT FURTHER GRAPH/SUMMARY PARAMETERS:
   COMBINE=     (Y/N)                    (AVG/SUM FOR DIFFERENT RESOURCES)
   INTERVAL=MINS(      )/DAYS(      )  DISPLAY REPORT(S) ONLY IF MAX>

 INDICATE TIME SPAN FOR REPORT:
   STARTT= 00:00:00    STOPT= 24:00:00   STARTD= 10APR2001  STOPD= 10APR2001
   USE OTHER NETSPY(S) LOCAL TIME=    (Y/N)


F1=HELP   F3=END   F5=APPLS   F6=TERMS   F9=NCPS   F10=LINES   F12=LOGOFF
OPTIONALLY, ENTER A COMMAND BELOW
---->
```

How to Access

From the Online Report Menu, choose the SUMMARY or GRAPH option, specify the CA parameter, then press Enter.

How to Use

To use the SUMMARY ALL option, enter ALL on the top line of the menu. To request a report on an individual variable, specify MESSAGES/MINUTE or OUT-Q-LEN on the next line.

You can specify additional parameters from the second and third groups of parameters on the screen.

Parameters

Parameters on the menu are described below.

Name	Description
MESSAGES/MINUTE	The message traffic rate for the resource.
OUT-Q-LEN	The outbound queue length (# of messages queued for output) for the NCP resource.
Other Parameters	See Common Parameters.

X.25 Virtual Circuit Summary/Graphic

This screen lets you select parameters for the X.25 virtual circuit summary or graphic display or to select the SUMMARY ALL option for a summary display of all parameters associated with the X.25 VC resource. The ALL option is valid *only* for the summary report.

```
HOST=XE44
                *** X.25 VCS SUMMARY/GRAPHIC DISPLAY MENU ***

 SELECT A VARIABLE BELOW OR ENTER "ALL" TO SUMMARIZE ALL NCP STATS:     (ALL)
   PACKETS/MINUTE   =     (Y/N)

 SELECT FURTHER GRAPH/SUMMARY PARAMETERS:
   COMBINE=     (Y/N)                   (AVGE/SUM FOR DIFFERENT RESOURCES)
   INTERVAL=MINS(      )/DAYS(      )  DISPLAY REPORT(S) ONLY IF MAX >

 INDICATE TIME SPAN FOR REPORT:
   STARTT= 00:00:00    STOPT= 24:00:00   STARTD= 10APR2001  STOPD= 10APR2001
   USE OTHER NETSPY(S) LOCAL TIME=     (Y/N)


F1=HELP   F3=END   F5=APPLS   F6=TERMS   F9=NCPS   F10=LINES   F12=LOGOFF
OPTIONALLY, ENTER A COMMAND BELOW
---->
```

How to Access

From the Online Report Menu, choose the SUMMARY or GRAPH option, specify the X25VC parameter, then press Enter.

How to Use

To use the SUMMARY ALL option, you enter ALL beside the first prompt.

Select Y or N for packets per minute.

You can select additional variables for the graph and summary displays from the second and third groups of variables.

Parameters

Parameters on the menu are described below.

Name	Description
PACKETS/MINUTE	Total number of data packets sent and received per minute.
DISPLAY REPORT(S) ONLY IF MAX	The reports will be displayed only if the highest peak in each report is greater than the value entered. If you request a SUMMARY ALL report, the MAX parameter refers to bytes per second.
Other Parameters	See Common Parameters.

TIC3 Summary/Graphic

This screen lets you select parameters for the NCP TIC3 summary or graphic display or to select the SUMMARY ALL option for a summary display of all parameters associated with the NCP TIC3 resource. The ALL option is valid *only* for the summary report.

```
HOST=XE44
                    *** TIC3 SUMMARY/GRAPHIC DISPLAY MENU ***

 SELECT A VARIABLE BELOW OR ENTER "ALL" TO SUMMARIZE ALL TIC3 STATS:
(ALL)
   BYTES/SECOND    >   (Y/N)   I-FRAMES/MINUTE >   (Y/N)   TOT FRAMES >
(Y/N)
   % BYTES RETRANS >   (Y/N)   UTILIZATION %         <String `(Y/N)'>  >

 SELECT FURTHER GRAPH/SUMMARY PARAMETERS:
   COMBINE= N   (Y/N)                    (AVG/SUM FOR DIFFERENT RESOURCES)
   INTERVAL=MINS(      )/DAYS(      )  DISPLAY REPORT(S) ONLY IF MAX >

 INDICATE TIME SPAN FOR REPORT:
   STARTT= 00:00:00    STOPT= 24:00:00   STARTD= 10APR2001  STOPD= 10APR2001
   USE OTHER NETSPY(S) LOCAL TIME= N (Y/N)


F1=HELP    F3=END    F5=APPLS    F6=TERMS    F9=NCPS    F10=LINES
F12=LOGOFF
OPTIONALLY, ENTER A COMMAND BELOW
 ---->
```

How to Access

From the Online Report Menu, choose the SUMMARY or GRAPH option, specify the TIC3 parameter, and press Enter.

How to Use

To use the SUMMARY ALL option, enter ALL beside the first prompt. To request a report on an individual variable, enter either Y or N for one parameter from the first group of parameters.

If desired, you can select additional parameters for the report from the second and third groups of parameters.

Parameters

Parameters on the menu are described below.

Name	Description
BYTES/SECOND	Number of bytes send and received per second.
% BYTES RETRANS	Percentage of bytes that are retransmitted during the interval.
I-FRAMES/MINUTE	Rate of information frames transmitted per minute.
UTILIZATION %	Percentage of TIC3 resource utilization
TOT FRAMES	Total number of frames sent and received.
DISPLAY REPORT(S) ONLY IF MAX	The reports will be displayed only if the highest peak in each report is greater than the value entered. If you request a SUMMARY ALL report, the MAX parameter refers to bytes per second.
Other Parameters	See Common Parameters.

NTRI Summary/Graphic

This screen lets you select parameters for the NTRI summary or graphic display or to select the SUMMARY ALL option for a summary display of all parameters associated with the NTRI resource. The ALL option is valid *only* for the summary report.

```
HOST=S028
                    *** NTRI SUMMARY/GRAPHIC DISPLAY MENU ***

SELECT A VARIABLE BELOW OR ENTER "ALL" TO SUMMARIZE ALL NTRI STATS:     (ALL)
  %TIC UTILIZATION >   (Y/N)   I-FRAMES/MINUTE >   (Y/N)   OUT-Q-LEN >  (Y/N)
  CONGESTION COUNT >   (Y/N)

SELECT FURTHER GRAPH/SUMMARY PARAMETERS:
  COMBINE= N   (Y/N)                    (AVG/SUM FOR DIFFERENT RESOURCES)
  INTERVAL=MINS(      )/DAYS(      )  DISPLAY REPORT(S) ONLY IF MAX >

INDICATE TIME SPAN FOR REPORT:
  STARTT= 00:00:00    STOPT= 24:00:00   STARTD= 10APR2001  STOPD= 10APR2001
  USE OTHER NETSPY(S) LOCAL TIME= N (Y/N)


F1=HELP   F3=END    F5=APPLS    F6=TERMS    F9=NCPS    F10=LINES   F12=LOGOFF
OPTIONALLY, ENTER A COMMAND BELOW
 ---->
```

How to Access

From the Online Report Menu, choose the SUMMARY or GRAPH option, specify the NTRI parameter, and press Enter.

How to Use

To use the SUMMARY ALL option, enter ALL beside the first prompt. To request a report on an individual variable, enter either Y or N for one parameter from the first group of parameters.

If desired, you can select additional parameters for the report from the second and third groups of parameters.

Parameters

Parameters on the menu are described below.

Name	Description
%TIC UTILIZATION	Percentage of the time interval that the TIC (Token Interface Coupler) was busy sending or receiving bytes.
CONGESTION COUNT	Number of frames that matched the network address but could not obtain buffer space.
I-FRAMES/MINUTE	Rate of information frames transmitted per minute.
OUT-Q-LENGTH	Length of the outbound I-frame queue.
DISPLAY REPORT(S) ONLY IF MAX	The reports will be displayed only if the highest peak in each report is greater than the value entered. If you request a SUMMARY ALL report, the MAX parameter refers to bytes per second.
Other Parameters	See Common Parameters.

Ethernet Summary/Graphic

This screen lets you select parameters for the Ethernet summary or graphic display or to select the SUMMARY ALL option for a summary display of all parameters associated with the Ethernet resource. The ALL option is valid *only* for the summary report.

```
HOST=XE44
                *** ETHERNET SUMMARY/GRAPHIC DISPLAY MENU ***

SELECT A VARIABLE BELOW OR ENTER "ALL" TO SUMMARIZE ALL ETH STATS:      (ALL)
  COLLISIONS       >   (Y/N)   I-FRAMES/MINUTE >   (Y/N)   OUT-Q-LEN >  (Y/N)
  CONGESTION COUNT >   (Y/N)  DISCARDED FRAMES >   (Y/N)

SELECT FURTHER GRAPH/SUMMARY PARAMETERS:
  COMBINE= N   (Y/N)                    (AVG/SUM FOR DIFFERENT RESOURCES)
  INTERVAL=MINS(      )/DAYS(      )  DISPLAY REPORT(S) ONLY IF MAX >

INDICATE TIME SPAN FOR REPORT:
  STARTT= 00:00:00    STOPT= 24:00:00   STARTD= 10APR2001  STOPD= 17APR2001
  USE OTHER NETSPY(S) LOCAL TIME= N (Y/N)


F1=HELP    F3=END    F5=APPLS    F6=TERMS    F9=NCPS   F10=LINES   F12=LOGOFF
OPTIONALLY, ENTER A COMMAND BELOW
---->
```

How to Access

From the Online Report Menu, choose the SUMMARY or GRAPH option, specify the ETH parameter, and press Enter.

How to Use

To use the SUMMARY ALL option, enter ALL beside the first prompt. To request a report on an individual variable, enter either Y or N for one parameter from the first group of parameters.

If desired, you can select additional parameters for the report from the second and third groups of parameters.

Parameters

Parameters on the menu are described below.

Name	Description
COLLISIONS	Total number of single and multiple collisions.
CONGESTION COUNT	Number of frames that matched the network address but could not obtain buffer space.
I-FRAMES/MINUTE	Rate of information frames transmitted per minute.
DISCARDED FRAMES	Number of discarded IP frames.
OUT-Q-LENGTH	Length of the outbound I-frame queue.
DISPLAY REPORT(S) ONLY IF MAX	The reports will be displayed only if the highest peak in each report is greater than the value entered. If you request a SUMMARY ALL report, the MAX parameter refers to bytes per second.
Other Parameters	See Common Parameters.

Frame Relay Summary/Graphic

This screen lets you select parameters for the Frame Relay summary or graphic display or to select the SUMMARY ALL option for a summary display of all parameters associated with the Frame Relay resource. The ALL option is valid *only* for the summary report.

```
HOST=XE44
              *** FRAME RELAY SUMMARY/GRAPHIC DISPLAY MENU ***

SELECT A VARIABLE BELOW OR ENTER "ALL" TO SUMMARIZE ALL NTRI STATS:     (ALL)
  FRAMES DISCARDED >   (Y/N)   I-FRAMES/MINUTE >   (Y/N)   OUT-Q-LEN >  (Y/N)
  CONGESTION COUNT >   (Y/N)

SELECT FURTHER GRAPH/SUMMARY PARAMETERS:
  COMBINE= N   (Y/N)                  (AVG/SUM FOR DIFFERENT RESOURCES)
  INTERVAL=MINS(      )/DAYS(      )  DISPLAY REPORT(S) ONLY IF MAX >

INDICATE TIME SPAN FOR REPORT:
  STARTT= 00:00:00    STOPT= 24:00:00   STARTD= 10APR2001  STOPD= 10APR2001
  USE OTHER NETSPY(S) LOCAL TIME= N (Y/N)


F1=HELP    F3=END    F5=APPLS    F6=TERMS    F9=NCPS   F10=LINES   F12=LOGOFF
OPTIONALLY, ENTER A COMMAND BELOW
---->
```

How to Access

From the Online Report Menu, choose the SUMMARY or GRAPH option, specify the FR parameter, and press Enter.

How to Use

To use the SUMMARY ALL option, enter ALL beside the first prompt. To request a report on an individual variable, enter either Y or N for one parameter from the first group of parameters. If desired, you can select additional parameters for the report from the second and third groups of parameters.

Parameters

Parameters on the menu are described below.

Name	Description
FRAMES DISCARDED	Total number of frames discarded. Valid for PLINK, LMI, and FRSE resources only.
CONGESTION COUNT	Number of frames that matched the network address but could not obtain buffer space. Valid for PLINK, LLINK and FRSE resources only.
I-FRAMES/ MINUTE	Average number of I-frames (for PLINK and LLINK) or frames (for LMI and FRSE) transferred per minute. Valid for PLINK, LLINK, LMI, and FRSE resources only.
OUT-Q-LENGTH	Number of I-frames on the link outbound queue. Valid for PLINK, LLINK, and FRSE resources only.
DISPLAY REPORT(S) ONLY IF MAX	The reports will be displayed only if the highest peak in each report is greater than the value entered. If you request a SUMMARY ALL report, the MAX parameter refers to bytes per second.
Other Parameters	See Common Parameters.

TCP/IP Summary/ Graph Display Menu

This screen lets you select parameters for the TCP/IP summary or graphic display or to select the SUMMARY ALL option for a summary display of all parameters associated with the TCP/IP resource. The ALL option is valid *only* for the summary report.

```
HOST=XE44
              *** TCP/IP SUMMARY/GRAPHIC DISPLAY MENU ***

  SELECT ONE VARIABLE BELOW OR ENTER "ALL" FOR SUMMARY:      (ALL)

ROUNDTRIP TIME=   (Y/N)    REXMITTED SEG=   (Y/N)  #BYTES=   (Y/N)

FOR IP ADDRESS=               FOR PORTID=      FOR SUBNET=

  SELECT FURTHER GRAPH/SUMMARY PARAMETERS:

    COMBINE=     (Y/N)                  (AVG/SUM DATA FOR DIFFERENT VRS)
    INTERVAL=MINS(      )/DAYS(      )  DISPLAY REPORT(S) ONLY IF MAX >

  INDICATE TIME SPAN FOR REPORT:

    STARTT= 00:00:00    STOPT= 24:00:00    STARTD= 15SEP00  STOPD= 15SEP00
    USE OTHER NETSPY(S) LOCAL TIME=     (Y/N)


 F1=HELP    F3=END    F5=APPLS    F6=TERMS    F9=NCPS    F10=LINES    F12=LOGOFF
  OPTIONALLY, ENTER A COMMAND BELOW
 ---->
```

How to Access

From the Online Report Menu, choose the SUMMARY or GRAPH option, specify the TCPIP parameter, and press Enter.

How to Use

To use the SUMMARY ALL option, enter ALL beside the first prompt. To request a report on an individual variable, enter either Y or N for one parameter from the first group of parameters. If desired, you can select additional parameters for the report from the second and third groups of parameters.

Parameters

Parameters on the menu are described below.

Name	Description
ROUNDTRIP TIME	TCP/IP information for connection with a round trip time greater than the specified value. Specify the value as an integer representing tenths of seconds.
REXMITTED SEG	TCP/IP information for connections with the number of retransmitted segments greater than the specified value. Specify the value as an integer.
#BYTES	TCP/IP information for connections with the number of bytes sent or received greater than the specified value. Specify the value as an integer.
FOR IP ADDRESS	TCP/IP information for connections with a specific IP address.

Name	Description
FOR PORTID	Displays TCP/IP information for connections with a specific port ID. You can specify a mask using both the asterisk (*) and question mark (?) characters
FOR SUBNET	Displays TCP/IP information for connections with a specific SUBNET address.
Other Parameters	See Common Parameters.

Sample Online Reports

Following are examples of various online reports you can request.

PRINT Report: Summary Record Display

This display was produced by specifying PRINT, APPL=*, and NETSPY=* on the Online Report Menu. Then the Enter key was pressed from the Application Summary Record Display Menu without an optional parameter being specified. Note that data from multiple NetSpys is combined on one display.

```
HOST=IPOX  *** NETSPY SUMMARY RECORD DISPLAY ***  25JAN1999.025 MON 11:27:30
 AVG-RESP  WORST   PERCENT-RESP-ON-TARGET  NO.     NO.     NO.  INPUT OUTPUT

HOST   NET  HOST   1    2    3    4 %OVER INPUT  OUTPUT NETRESP  SIZE  SIZET
SO2     25JAN1999  07:00:00
 0.6   0.1   7.6 82.5 12.6  1.5  3.1  0.0    63      82      53    18    769
SO2     25JAN1999  07:15:00
 0.4   0.1   8.3 90.6  4.9  1.6  2.7  0.0   183     206     179    16    837
SO2     25JAN1999  07:30:00
 0.5   0.1   6.6 89.7  5.3  1.6  3.2  0.0   187     227     169    14    712
SO2     25JAN1999  07:45:00
 0.3   0.2  11.4 93.0  4.5  1.2  0.9  0.3   334     405     307    13    881
SO2     25JAN1999  08:00:00
 0.5   0.2  11.4 87.1  8.2  1.5  2.7  0.3   257     397     225    15    692
```

GRAPH Report: Network Statistics

This display was produced by choosing GRAPH and APPL from the Online Report Menu and then selecting # MESSAGES from the Application Summary/Graphic Display Menu.

```
HOST=IPOX    **** NETSPY NETWORK STATISTICS ****  25JAN1999.025 MON 11:29:00
        APPL=TSO2       FIRSTDATE: 25JAN1999 MON   LASTDATE: 25JAN1999 MON
NUMBER OF MESSAGES (SUM), *=INPUT, -=OUTPUT
  07:00    ]*-                                      (      183      206 )
  07:15    ]*-                                      (      187      227 )
  07:30    ]**---                                   (      334      405 )
  07:45    ]**---                                   (      257      397 )
  08:00    ]**---                                   (      364      475 )
  08:15    ]******--------                          (      849     1044 )
  08:30    ]******--------                          (      872     1105 )
  08:45    ]*********------------                   (     1230     1593 )
  09:00    ]**********---------------------         (     1255     2672 )
           +---------+---------+---------+---------+
           0      1250      2500      3750      5000
```

SUMMARY Report: Network Statistics

This display was produced by choosing SUMMARY and APPL from the NetSpy Online Report Menu and then selecting # MESSAGES from the Application Summary/Graphic Display Menu.

```
HOST=IPOX  **** NETSPY NETWORK STATISTICS ****  25JAN1999.025 MON 11:29:50
        APPL=TSO2       FIRSTDATE: 25JAN1999 MON   LASTDATE: 25JAN1999 MON
NUMBER OF MESSAGES (SUM)
 07:00     INPUT=     183  OUTPT=     206  TOTAL=     389
 07:15     INPUT=     187  OUTPT=     227  TOTAL=     414
 07:30     INPUT=     334  OUTPT=     405  TOTAL=     739
 07:45     INPUT=     257  OUTPT=     397  TOTAL=     654
 08:00     INPUT=     364  OUTPT=     475  TOTAL=     839
 08:15     INPUT=     849  OUTPT=    1044  TOTAL=    1893
 08:30     INPUT=     872  OUTPT=    1105  TOTAL=    1977
 08:45     INPUT=    1230  OUTPT=    1593  TOTAL=    2823
```

SUMMARY ALL Report (Application): Network Statistics

This report was produced by choosing SUMMARY and APPL from the NetSpy Online Report Menu and then selecting SUMMARY ALL from the Application Summary/Graphic Display Menu.

```
HOST=IPOX *** NETSPY NETWORK STATISTICS SUMMARY *** 25JAN1999.025 MON 11:32:19
 AVG-RESP  WORST   PERCENT-RESP-ON-TARGET   NO.     NO.     NO.  INPUT OUTPUT
HOST   NET  HOST   1    2    3    4 %OVER  INPUT  OUTPUT NETRESP  SIZE  SIZET

TSO2     25JAN1999  07:00
 0.5   0.1   8.3 90.6  4.9  1.6  2.7  0.0   183     206     179    16     837
TSO2     25JAN1999  07:15
 0.5   0.1   6.6 89.7  5.3  1.6  3.2  0.0   187     227     169    15     712
TSO2     25JAN1999  07:30
 0.3   0.2  11.4 93.0  4.5  1.2  0.9  0.3   334     405     307    14     881
TSO2     25JAN1999  07:45
 0.6   0.2  11.4 87.1  8.2  1.5  2.7  0.3   257     397     225    16     692
TSO2     25JAN1999  08:00
 0.8   0.3  31.0 81.8 12.9  1.0  3.0  1.0   364     475     338    16     732
```

SUMMARY ALL Report (Terminal or SLU): Network Statistics

This display was produced by choosing SUMMARY and LU from the NetSpy Online Report Menu and then selecting SUMMARY ALL from the LU (Terminal) Summary/Graphic Display Menu.

```
HOST=IPOX *** NETSPY NETWORK STATISTICS SUMMARY *** 25JAN1999.025 MON 11:33:06
AVG-RESP   WORST   NO.    NO.     NO.  PERCENT-RESP-ON-TARGET INPUT  OUTPUT  V
HOST   NET   NET   INPUT OUTPUT NETRESP   1    2    3    4 %OVER  SIZE   SIZET

DXAL59A  25JAN1999  07:15     APPL=TSO2
  0.3   0.2   0.5      51    64     47  90.1  5.8  3.9  0.0  0.0   25     985
DXAL59A  25JAN1999  07:30     APPL=TSO2
  0.1   0.3   0.3     112    112   112  98.2  1.7  0.0  0.0  0.0   19    1038
DXAL59A  25JAN1999  07:45     APPL=TSO2
  0.5   0.3   0.5      39    39     39  87.1 10.2  2.5  0.0  0.0   31    1087
DXAL59A  25JAN1999  08:00     APPL=TSO2
  0.3   0.2   0.5      79    82     79  89.8  8.8  0.0  1.2  0.0   23     752
DXAL59A  25JAN1999  08:15     APPL=TSO2
                        0     0      0   0.0  0.0  0.0  0.0  0.0
```

SUMMARY ALL Report(Channel Adapter): Network Statistics

This display was produced choosing SUMMARY and CA from the Online Report Menu and then selecting SUMMARY ALL from the Channel Adapter Summary/Graphic Display Menu.

```
HOST=S008 *** NETSPY NETWORK STATISTICS SUMMARY *** 25JAN1999.025 MON 20:04:47
NCP                 SNDMSG RCVMSG   SNDBYTE   RCVBYTE  ATTNS  POS.  OUT-Q
INTVL                 /MIN   /MIN      /SEC      /SEC   /MIN  ATN%  LNGTH

L2CA    25JAN1999       15:45
15.1M                  184    207       667       399    145   100     12
L2CA    25JAN1999       16:00
14.9M                  160    129       563       232    129   100      7
L2CA    25JAN1999       16:15
15.0M                   95    100       475       255     85   100     11
```

SUMMARY ALL Report(TIC3): Network Statistics

This display was produced by choosing option 3 (SUMMARY) and TIC3=* from the NetSpy Online Report Menu. Then, ALL was entered on the TIC3 Summary/Graphic Display Menu.

```
HOST=S028                 *** NETSPY NETWORK STATISTICS SUMMARY ***              10JUL2000.191 MON 10:07:17
                  RESOURCE                     IFRMS  BYTES  RETRANSMIT%   TIME  LOCAL ERROR   TOTAL-FRAMES
                  NAME     TYPE  INTVL  UTIL%   /MIN   /SEC  FRAME BYTES   OUTS   BUSY FRAMES   SENT   RECV
-----------------------------------------------------------------------------------------------------------------
10:07:17 10JUL2000 A30Y2179 PLINK  3.7M  10.7   97107 179107   19.7  10.7     10     17     10  10710  37109
```

TCP/IP SUMMARY ALL report

This display was produced by choosing option 3 (SUMMARY) and TCP/IP= from the NetSpy Online Report Menu. Then, ALL was entered on the TCP/IP Summary/Graphic Display Menu.

```
HOST=XE44  *** NETSPY NETWORK STATISTICS SUMMARY *** 17SEP2000.261 WED 17:10:52
  CLIENT   LOCAL              REMOTE        ROUNDTRIP    REXMIT       BYTES
           PORT       IP-ADDRESS   PORT   TIME      VAR            SENT    RCVD
            17SEP2000  15:10:00
DEKDO017   5002          0.0.0.0      0      0     1500       0       0       0
            17SEP2000  15:10:00
CCITCPGW   7000   141.202.117.78   2503    209       30       3  107288   20573
            17SEP2000  15:10:00
CCITCPGW   7000  141.202.117.150   1037    217       37       0   39821    6379


F1=HELP    F3=END    F5=APPLS    F6=TERMS    F9=NCPS    F10=LINES    F12=LOGOFF
  OPTIONALLY, ENTER A COMMAND BELOW
---->
```

Chapter 9

Using the Trace Facilities

NetSpy traces or tracks transactions and individual PIUs that are sent to and received from terminals in your network. Trace data is written to the trace datasets identified by the TRACE1 and TRACE2 DD statements defined in the NetSpy startup procedure.

NetSpy automatically switches from one trace file to another when one becomes full. Before NetSpy switches to the alternate file, it clears the alternate file so that it contains only the latest data. When NetSpy is restarted, it appends trace data to the current trace file, rather than overwriting existing data.

Configuring the Trace Feature

You configure how the tracing feature works initially through trace parameters in the INITPRM member or file. For more information, see the *NetSpy Administrator Guide*. Then, you can override that configuration online using the trace facilities. You can also use these facilities to view trace records online, print them, or filter them for use with the TPNS script generator.

Types of Traces and How They Work

There are two types of traces:

- Transaction
- Buffer

Transaction Traces

Transaction traces are traces of entire transactions. Unsolicited writes (PIUs that are not part of a transaction) are not included in the trace. What constitutes a transaction is determined by the EOT parameters of APPL statements in the INITPRM member or file. Thus, a transaction may be defined differently for each application. A PIU that meets the EOT criteria concludes a transaction. In the event that a new transaction is started before the previous transaction ends, the previous transaction will not appear in the trace. See the *NetSpy Administrator Guide* for more information on the EOT parameter.

Transaction trace records contain up to 255 bytes per PIU and are written at the end of each base interval once the transaction is completed. You set the base interval through the BASEITVL parameter in the INITPRM member or file. See the *NetSpy Administrator Guide* for more information

You can activate and inactivate transaction traces online using the Trace Facilities Operator Commands Menu.

There are two types of transaction traces, both of which contain host and network response times:

- ***Transaction-all***, traces all transactions as if you had specified thresholds of zero. Transaction-all traces trace all transactions, regardless of whether the mode is set to Normal or Intensive. Transaction-all tracing will be started *only* for currently established sessions.
- ***Exception***, traces only those transactions that exceed one or more thresholds that you specify.

Trace Modes

Transaction traces operate in either normal or intensive mode, as follows:

Normal The current transaction that exceeds the specified threshold is traced *only* if the transaction that preceded it exceeded the tracing thresholds.

Intensive All transactions exceeding the thresholds are traced, regardless of whether the transactions preceding them did.

This mode requires higher trace buffer allocation than the normal mode does. Buffers are allocated for each transaction in progress. Keep in mind that applications that have the EOT operand set to LASTOUT for end-of-transaction mode (in their APPL statements in the INITPRM member or file), have a higher transaction percentage, and therefore require a higher trace buffer allocation than applications using other EOT modes.

Buffer Traces

Buffer traces track all individual PIUs regardless of whether they are part of transactions. (This includes unsolicited writes.) Buffer trace records are written in the same format as TPNS trace records.

Buffer trace records are written at the end of the base interval after one of the following occurs:

- The trace buffer becomes full
- Buffer tracing is stopped for all terminals and applications.

Comparison of Trace Types

The following table lists some basic differences between transaction and buffer traces.

Question	Transaction Traces	Buffer Traces
Is host response time (H-RSP) provided?	Yes	No
Is network response time (N-RSP) provided?	Yes, if the network response time was measured using the definite response method	No
Can response time thresholds be used as selection criteria for displaying or printing traces?	Yes	No
Are mapped virtual terminal sessions (those indicated with a “V-LU” in the “SESS TYPE” column of the Terminal Traffic and Response Time Screen) traced?	Yes. They are traced by their physical terminal name.	If the trace specifies APPL=N, no. If the trace specifies APPL=Y, yes.
What is the maximum amount of data that can be traced?	Up to the first 256 bytes of each PIU	The entire PIU

Question	Transaction Traces	Buffer Traces
Which PIUs will be captured in traces?	Those PIUs which are part of a transaction. (Unsolicited outputs are not traced.) **Note:** Normal printer output is not part of a transaction and is not traced by a transaction trace.	All PIUs are captured
When are entries written to trace files?	At the next base interval after the transaction has completed	At the next base interval after the trace-all buffer has become full or at the next base interval after all buffer tracing for APPLs and LUs has been stopped
What is the format of a trace record?	Internal NetSpy format	IBM's "TPNS" format, which may be used as input to the TPNS script generator

Using the Trace Facilities

The following illustration shows you the menu and display setup for the trace facilities.

Note: To access the trace facilities, you must be a privileged user.

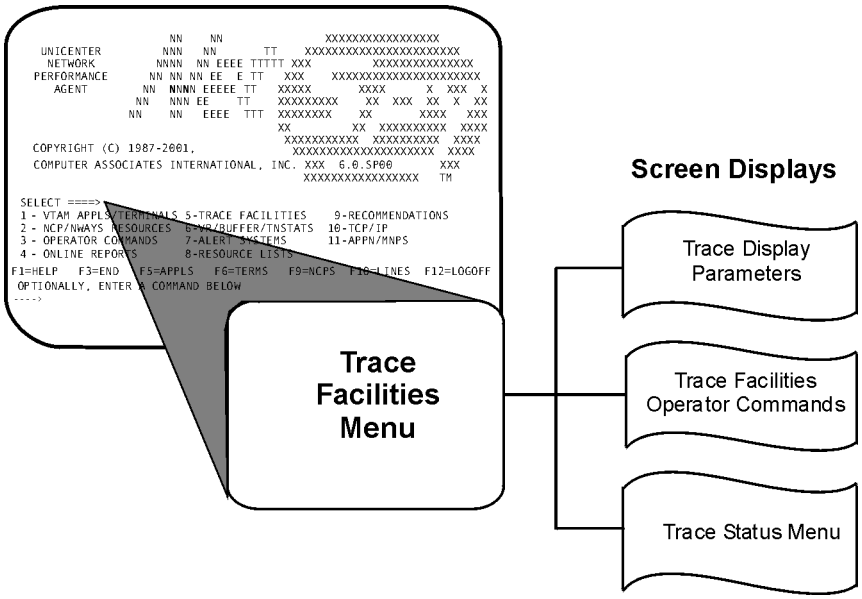

Trace Facilities Menu

The Trace Facilities Menu lets you select trace facilities options.

```
HOST=IPOX
                    ****** NETSPY TRACE FACILITIES MENU ******

 SELECT AN OPTION
 ====>

         1 -  TRACE DISPLAY FACILITIES
         2 -  TRACE OPERATOR FACILITIES
         3 -  TRACE STATUS DISPLAYS



F1=HELP  F3=END  F5=APPLS  F6=TERMS  F9=NCPS  F10=LINES  F12=LOGOFF
OPTIONALLY, ENTER A COMMAND BELOW
 ---->
```

How to Access

Access in two ways:

- On the NetSpy Main Menu, select option 5, Trace Facilities
- Enter TRACE from the command line of any screen

How to Use

Type the number of the option you want and press Enter. Each option is described below.

Trace Facilities Menu Options

The menu options are as follows:

Option	Description
1 - Trace Display Facilities	Displays trace records
2 - Trace Operator Facilities	Specifies how the trace facilities operate
3 - Trace Status Displays	Displays the trace status of certain APPLs or LUs

Trace Display Parameters

The Trace Display Parameters menu lets you display transaction and/or buffer trace records.

```
HOST=IPOX
                      *** TRACE DISPLAY PARAMETERS ***

 OPTIONALLY, ENTER PARAMETERS TO SELECT TRACE RECORDS TO BE DISPLAYED

   APPL. =                                      USER RESP TIME>
   LUNAME=                                      HOST RESP TIME>
                                                NET  RESP TIME>


 INDICATE TIME SPAN FOR REPORT:

   STARTT= 00:00:00    STOPT= 24:00:00   STARTD= 10APR2001  STOPD= 17APR2001


F1=HELP   F3=END   F5=APPLS   F6=TERMS   F9=NCPS   F10=LINES   F12=LOGOFF
OPTIONALLY, ENTER A COMMAND BELOW
---->
```

How to Access

Access in two ways:

- On the Trace Facilities Menu, select option 1, Trace Display Facilities
- Enter TRACED from the command line of any screen

How to Use

Follow this procedure to use the Trace Display Parameters screen:

1. Specify one of the following or both:
   - An application in the APPL field, to see the trace records for an application.
   - An LU in the LUNAME field, to see trace records for all applications in session with the LU.
2. Do one of the following:
   - If you want to see both types of transaction trace records that exceed a particular threshold, specify that threshold in only *one* of the following fields: USER RSP TIME, HOST RSP TIME, or NET RSP TIME. If you specify more than one threshold, only the second one you specified will be used.
   - If you want to see transaction and buffer trace records, do not specify a threshold.
3. If desired, specify a time range (in the STARTT and STOPT fields) and date range (in the STARTD and STOPD fields) for the traces to be included in the display.
4. Press Enter, and you will see a display such as the one shown next.

Trace Display Fields

The following table provides information about the fields on the screen.

Field	Description
APPL	An ACB name, VTAM name, generic name.
LUNAME	A specific or generic secondary LU name (terminal or application name), or the word RLIST (to select all LUs in the LU resource list).
USER RESP TIME HOST RESP TIME NET RESP TIME	Threshold in tenths of seconds for the user, host, or network response time. Only trace records for transactions that exceed this threshold are included in the display.
STARTT STOPT	The time range for traces to be included in the display, specified as *hh:mm* or *hh:mm:ss*. The defaults are 00:00:00 to 24:00:00.
STARTD STOPD	Date range for traces to be included in the display, specified as *yyddd*, *ddmmmyy*, or TODAY (for the current date). To specify the year 2000, type 00. The defaults for STARTD and STOPD are the oldest and newest dates found in the current log file at logon.

Online Trace Records Display

This display can contain up to 100 trace records. To page forward and backward through the records, use the F8 and F7 keys, respectively.

Press F1 for an explanation of column headings on this display.

```
HOST=IPOX ** NETSPY ONLINE TRACE RECORDS DISPLAY **
0APPL     LUNAME    DATE      TIME       DIR COUNT RH     V H-RESP N-RESP
 A44ISP21 A04ISP21  12DEC2000 14:05:49.2 IN    339 038100
                      C1D30101  C1F4F4C9  E2D7F2F1  C1F0F4C9 |AL..A44ISP21A04I|
                      E2D7F2F1  C1D3E3E2  C3C24040  C4C9C5E9 |SP21ALTSCB  APPL|
                      F1404040  00000000  13000000  00010120 |1   ...........|
                      00000000  00000000  C1D9C3C2  C4C9C5E9 |........ARCBAPPL|
                      F1404040  C1F4F4C9  E2D7F2F1  5C5C5C5C |1   A44ISP21****|
                      5C5C5C5C  00000000  00000100  00236CE0 |****........%.|
                      0C070B80  00000BB8  00030002  0040801F |............ ..|
                      C7C5D5C5  D9C1D340  C1D3C5D9  E340C1D7 |GENERAL ALERT AP|
                      D7D3407E  5C40C4C5  E2E340E4  E2C5D940 |PL =* DEST USER |
                      40404040  40404040  40404040  40404040 |                |
                      00000020  00000098  00000000  00000420 |.......q........|
                      00000098  00000000  00000000  00000000 |...q...........|
                      00000000  00000000  00000000  00000000 |................|
                      00000000  00000000  00000000  00000000 |................|
                      08000000  00000000  0C304510  00000000 |................|
                      00000000  00000000  B5151DA7  00000000 |...........x....|

  F1=HELP  F3=END  F5=APPLS  F6=TERMS  F9=NCPS  F10=LINES  F12=LOGOFF
  OPTIONALLY, ENTER A COMMAND BELOW
  ---->
```

Note: NetSpy writes outbound trace records *before* any changes due to forced definite response are made; therefore, these changes will not appear in the trace data. Inbound definite responses made to an output that requests an exception response indicate that NetSpy forced the definite response.

How to Access

Access in two ways:

- On the Trace Facilities Menu, select option 1, Trace Display Facilities
- Enter TRACED from the command line of any screen

Trace Facilities Operator Commands

The Trace Facilities Operator Commands menu lets you specify how the trace facility operates.

```
HOST=IPOX
              ***  NETSPY TRACE FACILITIES OPERATOR COMMANDS ***

 SELECT AN OPTION
 ---->

1 - STRC  NAME=           APPL=    (Y/N/A)    (START TRACE FOR LU/APPL)
2 - PTRC  NAME=           APPL=    (Y/N)      (STOP  TRACE FOR LU/APPL)
3 - STRCA NAME=           APPL=    (Y/N)      LENGTH=
                                                (START TRACE ALL FOR LU/APPL)
4 - PTRCA NAME=           APPL=    (Y/N)      (STOP  TRACE ALL FOR LU/APPL)
5 - SETT  APPL=           USER=          HOST=      NET=
                 (SET NON-ZERO-TRACE-THRESHOLDS FOR APPL. RESPONSE TIME)
6 - TRACE MODE=              (NORMAL/INTNSIVE/ACT/INACT)


F1=HELP   F3=END   F5=APPLS   F6=TERMS   F9=NCPS   F10=LINES   F12=LOGOFF
OPTIONALLY, ENTER A COMMAND BELOW
---->
```

How to Access

Do one of the following:

- On the Trace Facilities Menu, choose option 2, Trace Operator Facilities.
- At the command line of any NetSpy screen, enter TRACEO.

How to Use

Follow the instructions for each option in the following table.

Option	Description and Usage
1 - STRC	Enables transaction (exception or transaction-all) tracing for the specified terminal or application. **To use this option:** 1. Select option 1. 2. In the NAME field beside option "1 - STRC," specify the name of the application or prefix of the terminal for which you want to enable tracing. 3. In the APPL field: – If you specified an application name or prefix, type Y to enable transaction tracing. – If you specified an LU name or prefix, and you want to enable: — Exception tracing, type N, which is the default. — Transaction-all tracing, type A. This starts transaction-all tracing for all *currently established* sessions.

Option	Description and Usage
	4. Press Enter, and you will see the message NSY0122 - *name* NOW BEING TRACED.
2 - PTRC	Disables transaction (exception or transaction-all) tracing for the specified terminal or application. **To use this option:** 1. Select option 2. 2. In the NAME field beside option "2 - PTRC," specify the name of the application or prefix of the terminal for which you want to disable tracing. 3. In the APPL field: – If you specified an application name or prefix, type Y to disable exception or transaction-all tracing. – If you specified an LU name or prefix, type N to disable exception *and* transaction-all tracing. This is the default. 4. Press Enter, and you will see the message NSY0123 - *name* NOW NOT BEING TRACED.
3 - STRCA	Enables buffer tracing for all PIUs for the specified terminal or application. **To use this option:** 1. Select option 3. 2. In the NAME field beside option "3 - STRCA," specify the full name of the application or terminal for which you want to enable tracing of PIUs. (You cannot use prefixes or generic names.) ■ If APPL=N: If multiple sessions with the same LU name exist, only one of the sessions will be traced. Also, if multiple sessions with the same LU name exist because you are using a session manager interface, the physical session with the session manager will be traced. ■ If APPL=Y: All sessions will be traced and VTAM bind requests will show in the trace. 3. In the APPL field: ■ If you specified a full application name, type Y. ■ If you specified a full LU name, type N, which is the default. 4. If desired, specify the number of bytes to be traced for each PIU in the LENGTH field. If you leave this field blank, it

Option	Description and Usage
	defaults to the value of the TRACELEN statement in the INITPRM member or file. 5. Press Enter, and you will see the message NSY0124 - *name* BEING TRACED FOR ALL TRANSACTIONS.
4 - PTRCA	Disables buffer tracing for the specified terminal or application. **To use this option:** 1. Select option 4. 2. In the NAME field beside option "4 - PTRCA," specify the full name of the application or terminal for which you want to disable tracing of PIUs. (You cannot use prefixes or generic names.) 3. In the APPL field: ■ If you specified a full application name, type Y. ■ If you specified a full LU name, type N, which is the default. 4. Press Enter, and you will see the message NSY0150 - *name* IS NOW NOT BEING TRACED FOR ALL TRANSACTIONS.
5 - SETT	Sets transaction trace thresholds for user, host, and/or network response time. **To use this option:** 1. Select option 5. 2. In the APPL field beside option "5 - SETT," specify the name of the application for which you want to set the thresholds. 3. In the USER, HOST, *or* NET fields, specify a threshold in tenths of seconds. For example, to specify a threshold of 3.0 seconds, you would enter 0 without the decimal point. 4. Press Enter, and you will see the message NSY0126 - *name* UPDATED TRACING TARGETS.
6 - TRACE	Sets the operating mode or state for exception tracing. **To use this option:** 1. Select option 6. 2. In the NAME field beside option "6 - TRACE MODE," specify either: ■ An operating mode. For information, see Trace Modes. Note that you specify INTNSIVE to select intensive mode.

Option	Description and Usage
	■ An operating state: — ACT, to activate exception and transaction-all tracing, and trace alerts. When you activate exception tracing, the operating mode used depends on whether you have changed the mode online: If you have, the mode defaults to the last one you specified online. If you have not, the mode defaults to the one you specified on the TRACE parameter in the INITPRM member or file. — INACT, to inactivate exception and transaction-all tracing, and trace alerts. In this state, space that was allocated for tracing at startup remains allocated. 3. Press Enter, and you will see the message NSY0125 - *mode* IS NOW CURRENT MODE FOR TRACE.

Trace Status Menu

The Trace Status Menu lets you request a trace status display for either an application or an LU.

```
HOST=IPOX
                        *** TRACE STATUS MENU ***

 ENTER ONE IDENTIFIER FOR STATUS DISPLAY:

   APPL  =
   LUNAME=

        THE FOLLOWING ARE VALID IDENTIFIERS TO BE DISPLAYED:

        <APPLNAME> - APPLICATION NAME DEFINED TO NETSPY OR *

        <LUNAME>   - LU NAME OR LU PREFIX KNOWN TO NETSPY OR *

        TRACE      - APPLICATIONS OR LUS ELIGIBLE FOR TRACING

        TRCALL     - APPLICATIONS OR LUS TRACING ALL TRANSACTIONS

        NOTRACE    - APPLICATIONS OR LUS EXCLUDED FROM TRACING

        (DEFAULT)  - ALL APPLICATIONS KNOWN TO NETSPY

F1=HELP  F3=END  F5=APPLS  F6=TERMS  F9=NCPS  F10=LINES  F12=LOGOFF
OPTIONALLY, ENTER A COMMAND BELOW
---->
```

How to Access

Do one of the following:

- On the Trace Facilities Menu, choose option 3, Trace Status Displays.
- At the command line of any NetSpy screen, enter TRACES.

How to Use

To request a trace status display, in the APPL or LUNAME field, enter one of the options described in the following table.

Trace Status Menu APPL/LUNAME Options

The APPL/LUNAME options are as follows.

Option	Description
APPL	Specify one of the following: ■ The name defined on the APPL statement for the application in the INITPRM member or file ■ A generic name ■ An asterisk (*) to select all known applications ■ The word TRACE, TRCALL, or NOTRACE explained below. – TRACE to select all applications or LUs for which exception or transaction-all tracing has been activated. – TRCALL to select all applications or LUs for which buffer tracing has been activated. – NOTRACE to select all applications or LUs for which exception and transaction-all tracing has been inactivated. The default is * (all known applications).
LUNAME	Specify one of the following: ■ A terminal name ■ A terminal name prefix for a group of terminals ■ An application name ■ An asterisk (*) to select all known secondary LUs ■ The word TRACE, TRCALL, or NOTRACE explained above.

Trace Status Display for APPLs

You see a display such as the following after specifying one or more applications on the Trace Status Menu.

```
HOST=IPOX   *** NETSPY TRACE STATUS DISPLAY ***  25JAN1999.025 TUE 15:14:43
 NAME         TRACE     TRCALL    HOST    NET     USER    MODE = NORMAL
 TPXPROD       YES        NO        50      40      70
 TPXRP         YES        NO        50      40      70
 SMV1JM        YES        YES       50      40      70
 SCONXA        YES        NO        50      40      70
 NETSPYXA      YES        NO        50      40      70
 NETSPYSP      NO         YES       50      40      70
 NETSPYT       YES        NO        50      40      70
 TSO1          YES        NO        50      40      70
 STX           YES        NO        50      40      70
 STXSWPR       YES        NO        50      40      70
 NCCF1         NO         NO        50      40      70
 A08JES2       YES        NO        50      40      70
 RMT1          YES        NO        50      40      70
 RMT2          YES        NO        50      40      70
 TSO2          YES        NO        30      20      60
F1=HELP  F3=END  F5=APPLS  F6=TERMS  F9=NCPS  F10=LINES  F12=LOGOFF
OPTIONALLY, ENTER A COMMAND BELOW
---->
```

Press F1 for an explanation of column headings on this display.

Trace Status Display for LUs

You see a display such as the following after specifying one or more LUs on the Trace Status Menu.

```
HOST=IPOX    *** NETSPY TRACE STATUS DISPLAY ***  25JAN1999.025 TUE 15:15:43
 NAME         TRACE     TRCALL    HOST    NET     USER    MODE = NORMAL
 *DEFAULT      YES
 A1                       YES
 A1A                      NO
 A1B                      NO
 A1B5                     YES
 A1C                      NO
 A2                       YES
 A3                       YES
 A1            NO
 E1            NO
 E1A           YES
 E1A6          NO
 E1A7          NO
 E1B           YES
 E1C           YES
 E2            NO
 E2X           YES
 E3            NO
 NCCF1         NO
F1=HELP   F3=END   F5=APPLS   F6=TERMS   F9=NCPS   F10=LINES   F12=LOGOFF
OPTIONALLY, ENTER A COMMAND BELOW
---->
```

Press F1 for an explanation of column headings on this display.

Printing Trace Records

You print selected trace records collected by the online trace facility using the offline trace print utility.

Printing Trace Records in OS/390

You print trace records in OS/390 through JCL contained in the PRTRACE member of the NETSPY.CNTL data set. A sample version of this JCL is shown below.

To use this sample JCL at your site, simply customize the parameters on the last 11 lines as desired and delete the asterisks at the beginning of their lines to make them active. Keep in mind that each parameter must be on a separate line. These parameters are described in Trace Print Utility Parameters.

Sample JCL for the Offline Trace Print Utility

```
//SPYPRTRC JOB 1,PRTRACE,CLASS=A,MSGCLASS=H
//*********************************************************************
//* THIS JOB ALLOWS YOU TO PRINT NETSPY TRACE RECORDS FROM NETSPY'S   *
//* TRACE FILE.                                                       *
//*                                                                   *
//* IT USES THE NETSPY TRACE DATASETS AS INPUT AND PRODUCES A LISTING *
//* OF TRACE RECORDS SELECTED BY PARAMETERS SPECIFIED BELOW.          *
//*                                                                   *
//* THE SORTTRC STEP SORTS THE TRACE DATASETS BY DATE AND TIME.       *
//* NOTE THE SYSIN STEP OF SORT DETERMINES WHETHER BUFFER TRACE       *
//* (TRACE-ALL) OR EXCEPTION TRACE RECORDS WILL BE USED FOR THE REPORT*
//*********************************************************************
//SORTTRC  EXEC PGM=SORT,REGION=4000K
//SORTLIB  DD DISP=SHR,DSN=SORT.SORTLIB
//SORTWK01 DD UNIT=SYSDA,SPACE=(CYL,(20,20))
//SORTWK02 DD UNIT=SYSDA,SPACE=(CYL,(20,20))
//SORTWK03 DD UNIT=SYSDA,SPACE=(CYL,(20,20))
//SORTWK04 DD UNIT=SYSDA,SPACE=(CYL,(20,20))
//SORTIN   DD DISP=SHR,DSN=NETSPY.TRACE1        <- NETSPY TRACE FILES
//         DD DISP=SHR,DSN=NETSPY.TRACE2        <- NETSPY TRACE FILES
//SORTOUT  DD DSN=&&NSYTRC,
//            UNIT=SYSDA,
//            SPACE=(CYL,(10,10),RLSE),
//            DISP=(NEW,PASS)
//SYSPRINT DD SYSOUT=*
//SYSOUT   DD SYSOUT=*
//SYSIN    DD DISP=SHR,DSN=NETSPY.CNTL(PRTRCB)  <- SELECT TRACEALL RECS
//SYSIN    DD DISP=SHR,DSN=NETSPY.CNTL(PRTRCE)  <- SELECT TRANSACTION
//*                                                   RECORDS
//*********************************************************************
//* THE TRCRPT STEP PRODUCES THE REPORT.                              *
//*                                                                   *
//* USAGE NOTES ABOUT CONTROL PARAMETERS:                             *
//*                                                                   *
//* (1) SPECIFY ONE CONTROL PARAMETER PER LINE.                       *
//* (2) AN "*" OR ";" IN COLUMN 1 MAKES THE LINE A COMMENT.           *
//* (3) TO PRINT ALL TRACE RECORDS IN THE TRACE FILES, RUN            *
//*     THIS UTILITY WITH NO PARAMETERS OR SPECIFY MAXNOENT=          *
//*     TO PRINT MORE THAN 200 ENTRIES.                               *
```

```
//* (4) ONLY USE THE "HRSPTIME", "NRSPTIME", AND "URSPTIME"           *
//*     THRESHOLDS WHEN PRINTING TRANSACTION-EXCEPTION OR             *
//*     TRANSACTION-ALL RECORDS.                                      *
//*     THESE THRESHOLDS ARE MUTUALLY-EXCLUSIVE.                      *
//*******************************************************************
//TRCRPT   EXEC PGM=NSYTRCU,REGION=4000K,COND=(0,NE)
//STEPLIB  DD DISP=SHR,DSN=NETSPY.LOADLIB     <-* NETSPY LOADLIB
//TRCDATA  DD DSN=&&NSYTRC,DISP=(OLD,DELETE)
//SYSPRINT DD SYSOUT=*
//SYSUDUMP DD SYSOUT=*
//TRCEPRT  DD SYSOUT=*
//TRCECNTL DD *
* FOLLOWING ARE A LIST OF PARAMETERS YOU CAN SPECIFY:
* PAGESIZE = 40       ; DEFAULT PAGE SIZE IS 60
* MAXNOENT = 500      ; DEFAULT NUMBER OF ENTRIES TO PRINT IS 200
* APPL = *            ; ACBNAME OR REAL VTAM NAME FOR THE APPLICATION
* LUNAME = *          ; SPECIFIC OR GENERIC SECONDARY LU NAME
* URSPTIME > 70       ; USER RESPONSE TIME THRESHOLD
* HRSPTIME > 70       ; HOST RESPONSE TIME THRESHOLD
* NRSPTIME > 70       ; NETWORK RESPONSE TIME THRESHOLD
* STARTT = 08:00      ; START TIME FOR DISPLAY
* STOPT  = 18:00      ; STOP  TIME FOR DISPLAY
* STARTD = 01JAN99    ; START DATE FOR DISPLAY
* STOPD  = 31DEC99    ; STOP  DATE FOR DISPLAY
```

Trace Print Utility Parameters

The following table describes each of the parameters that you can customize for the Trace Print Utility.

Parameter	Description
PAGESIZE	The number of lines to be printed on each page of the trace record output. **Default:** PAGESIZE=60
MAXNOENT	The maximum number of records to be printed. **Default:** MAXNOENT=200 **Note:** The amount of below-the-line storage required for printing varies depending on how you set this parameter. To determine how much storage you need, simply multiply the value of the MAXNOENT parameter by 5600. For example, if MAXNOENT=100, you would need at least 560,000 bytes of below-the-line storage.
APPL	The name specified on the APPL statement in the INITPRM member or file or a generic application name. **Default:** * (all known applications).
LUNAME	A specific or generic secondary LU name (terminal name or application name).

Parameter	Description
URSPTIME	User response time threshold in tenths of seconds. For example, to specify a threshold of 3.0 seconds, you would enter 30 without the decimal point. (Specify this *only* when requesting exception and transaction-all trace records.)
HRSPTIME	Host response time threshold in tenths of seconds. For example, to specify a threshold of 3.0 seconds, you would enter 30 without the decimal point. (Specify this *only* when requesting exception and transaction-all trace records.)
NRSPTIME	Network response time threshold in tenths of seconds. For example, to specify a threshold of 3.0 seconds, you would enter 30 without the decimal point. (Specify this *only* when requesting exception and transaction-all trace records.)
STARTT **STOPT**	Time range for trace records to be included in the printout, specified as *hh:mm:ss* or *hh:mm.*
STARTD **STOPD**	Date range for trace records to be included in the printout, specified as *yyddd*, *ddmmmyy*, or TODAY (for today's date).

Filtering Trace Records for Use with TPNS

You use the Teleprocessing Network Simulator (TPNS) record filter to separate transaction (exception and transaction-all) trace records from buffer trace records and format the latter for use with the TPNS script generator.

Filtering Trace Records in OS/390

You filter trace records in OS/390 through JCL contained in the TPNSFLTR member of the NETSPY.CNTL data set.

A sample version of this JCL is shown below. To use this sample JCL at your site, simply change the TRACEI and TRACEO DD statements as necessary. The TRACEI statement identifies the trace record input, which is typically a concatenation of trace data sets. The TRACEO statement identifies the filter output (the filtered buffer trace records formatted for use with the TPNS script generator). Be sure to allocate this member with characteristics identical to the input member.

Sample JCL to Filter Trace Records

```
//SPYFLTR  JOB 1,NS-FILTER,CLASS=A,MSGCLASS=H
//*********************************************************************
//*   IF YOU ARE RUNNING BOTH THE EXCEPTION AND BUFFER TRACE AND WISH
//*   TO USE THE TRACE AS INPUT TO THE TPNS SCRIPT GENERATOR, YOU MUST
//*   FILTER OUT THE EXCEPTION TRACE RECORDS.
//*   THIS JOB WILL PROCESS A MIXED INPUT TRACE FILE AND PRODUCE A
//*   FILE OF BUFFER TRACE RECORDS IN THE TPNS FORMAT. THIS CAN THEN
//*   BE THE INPUT TO THE TPNS SCRIPT GENERATOR.
//*********************************************************************
//FLTR     EXEC PGM=NSYTFLTR
//STEPLIB  DD DSN=NETSPY.LOADLIB,DISP=SHR
//*********************************************************************
//*   THE INPUT IS THE NETSPY TRACE DATASET OR DATASETS THAT CONTAIN
//*   A MIXTURE OF EXCEPTION AND BUFFER TRACE RECORDS.
//*******************************************************************
//TRACEI   DD DSN=NETSPY.TRACE1,DISP=SHR
//         DD DSN=NETSPY.TRACE2,DISP=SHR
//*********************************************************************
//*   THE OUTPUT FILE WILL HAVE BUFFER TRACE RECORDS IN THE TPNS FORMAT
//*********************************************************************
//TRACEO   DD DSN=NETSPY.TPNS.INPUT,DISP=SHR
//SYSPRINT DD SYSOUT=*
//SYSUDUMP DD SYSOUT=*
```

Chapter

10 Using Alerts

NetSpy has three types of alerts:

- General, generated through monitor specifications that you create
- Graphic, generated through selections you make on a menu
- Trace, generated through your configuration of the tracing parameters in the INITPRM member or file.

Menus

The following illustration shows the menu setup for NetSpy's alerts.

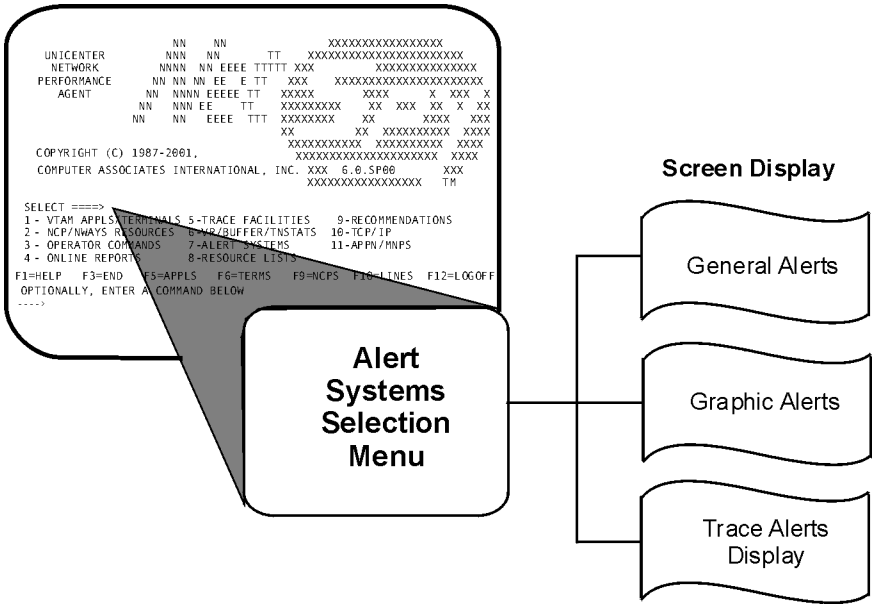

Function Keys

You can use the following function keys in the alerts facility:

Key	Function
F1	Accesses online help
PA1	Recalls the last explicit command entered
PA2	Recalls the data previously cleared on a menu
F7	Pages backward
F8	Pages forward
CLEAR	Clears data input fields on a menu

Alert Systems Selection Menu

This menu lets you access general and graphic alerts and trace alert displays.

```
HOST=IPOX
                *** NETSPY ALERT SYSTEMS SELECTION MENU  ***

 SELECT AN OPTION
 ====>

   1 - GENERAL ALERTS
   2 - GRAPHIC ALERTS
   3 - TRACE ALERTS DISPLAY


F1=HELP  F3=END  F5=APPLS  F6=TERMS  F9=NCPS  F10=LINES  F12=LOGOFF
OPTIONALLY, ENTER A COMMAND BELOW
---->
```

How to Access

Do one of the following:

- On the NetSpy Main Menu, select option 7, Alert Systems.
- At the command line of any NetSpy screen, enter ALERT.

How to Use

Type the number that corresponds to the option you want and press Enter.

Using General Alerts

You can use general alerts to track alerts for your entire network from one terminal. General alerts are special alerts generated only for the network resources for which you have created monitors. A monitor is a specification telling NetSpy which resources to monitor for general alerts, the thresholds that determine alerts for that resource, and where to send alert messages each time an alert for that resource is generated.

If you specify an INCLUDE type RLIST as the resource name in the monitor specification (EXCLUDE type RLISTs are not permitted with alerts), NetSpy uses the resource list that you defined for the specified resource type. See "Specifying Resource Lists" in the chapter entitled "Using the Displays."

You can define monitors in two ways:

- Before startup: through MONITOR statements in the ALERTPRM member or file.
- Online: using the Monitor Definition Main Menu, shown under Defining Monitors for General Alerts.

Generating Cross-Domain General Alerts

You generate cross-domain general alerts through monitors that have been set up for execution on remote NetSpys, that is NetSpys running in other domains. To do this, you create a monitor on the local NetSpy and specify the remote NetSpy's NSYXNAME. Each NetSpy has a unique NSYXNAME defined on the NSYXNAME statement in its INITPRM member or file. You set up connections between the local and remote NetSpys either at startup using the CONNECT statement, in the STARTPRM member or file, or online using the CONNECT command.

When you create monitors to be executed in a remote NetSpy, the remote general alert is sent to the local NetSpy or NetMaster. The local NetSpy or NetMaster is responsible for sending the alert to the specified local destination. See the NetMaster documentation for information on valid NetMaster destinations.

You can track monitors running in a remote NetSpy from either the local or remote NetSpy using the Monitor Status Display screen. An asterisk by the name indicates that the monitor did not originate locally.

You can track the general alerts generated by the remote monitors using the Global and User Alert displays from the local NetSpy only.

General Alerts System Selection Menu

Select the desired general alerts feature by using the General Alerts System Selection Menu. This menu lets you:

- Define and delete monitors
- Display the status of monitors
- Display global and user alerts
- Activate and inactivate alert warning.

```
HOST=IPOX
             *** NETSPY GENERAL ALERTS SYSTEM SELECTION MENU ***

 SELECT AN OPTION
 ====>

         1 - DEFINE MONITORS
         2 - DELETE MONITORS
         3 - DISPLAY MONITOR STATUS
         4 - DISPLAY GLOBAL ALERTS
         5 - DISPLAY USER ALERTS
         6 - ACTIVATE ALERT WARNING
         7 - INACTIVATE ALERT WARNING


F1=HELP  F3=END  F5=APPLS  F6=TERMS  F9=NCPS  F10=LINES  F12=LOGOFF
OPTIONALLY, ENTER A COMMAND BELOW
---->
```

How to Access

Do one of the following:

- On the Alert Systems Selection Menu, choose option 1, General Alerts.
- At the command line of any NetSpy screen, enter GALRT.

How to Use

Type the number that corresponds to the option you want and press Enter. Each option is described in the following table.

Options on the General Alerts System Selection Menu

The table below explains the options on the above menu.

Option	Description
1 - Define Monitors	To create monitors
2 - Delete Monitors	To delete monitors
3 - Display Monitor Status	To display the status of monitors
4 - Display Global Alerts (privileged users only)	To display the general global alerts generated through monitors that specify GLOBAL as the routing destination. (All privileged NetSpy users can view GLOBAL alerts.)
5 - Display User Alerts	To display the general alerts generated through monitors that specify USER as the routing destination. (Only the user who defined the user alert monitor can view the alerts.)
6 - Activate Alert Warning (privileged users only)	To tell NetSpy to send the following warning message to your terminal: NSY3150 - NETSPY ALERTS ISSUED. If the alert is a global alert, it is issued at the end of each interval during which an alert is generated. If the alert was a user alert, only the user who defined it would receive the message.
7 - Inactivate Alert Warning (privileged users only)	To tell NetSpy to stop sending an alert warning message to your terminal each time a global or user alert is issued

Defining Monitors for General Alerts

To define a monitor for general alerts, you start with the Monitor Definition Main Menu.

```
HOST=NQ28
             *** NETSPY MONITOR DEFINITION MAIN MENU ***

   FILL IN FOLLOWING DATA FIELDS TO DEFINE THE MONITOR:

   MONITOR  NAME ===>

   RESOURCE TYPE ===>

   RESOURCE NAME ===>

   TITLE ===>

   INTERVAL IN SECONDS = 30   START TIME = 00:00   STOP TIME = 00:00

   DESTINATION (GLOBAL/USER/CONSOLE/LOG/SMF/SNMP/DB/NETVIEW or NMEPS/ALL) :
   LOG   ,          ,          ,          ,          ,        ,

   DESTINATION NETSPY-TO-NETSPY NAME ===>          (NETSPY RESOURCES ONLY)

F1=HELP  F3=END  F5=APPLS  F6=TERMS  F9=NCPS  F10=LINES  F12=LOGOFF
OPTIONALLY, ENTER A COMMAND BELOW
---->
```

How to Access

Do one of the following:

- On the General Alert System Selection Menu, choose option 1, Define Monitors.
- At the command line of any NetSpy screen, enter DEFMON.

How to Use

To define a monitor, follow these steps:

1. Specify a monitor name of up to eight characters. (You will need this name later if you want to delete the monitor.)
2. Specify the resource type to monitor:

APPL	Application
LINE	Line
LU	Terminal or application
NCP	NCP
PU	Cluster
VR	Virtual route
X25LINES	X.25 lines
X25PUS	X.25 PUs
X25VCS	X.25 virtual circuits

LLINKS	NTRI logical links
PLINKS	NTRI physical links
ETHPLINK	Ethernet physical link
FRPLINK	Frame Relay physical link
FRLLINK	Frame Relay logical link
FRPU	Frame Relay physical unit
TIC3LINK	TIC3 physical line
TIC3PU	TIC3 logical PU

3. Specify the names of the resource to be monitored.

   If you want NetSpy to use the resource list for that resource type, specify RLIST. For more information see "Specifying Resource Lists" in the chapter entitled "Using the Displays."

   Note: You can qualify RLISTs for resource type LU by FORAPPL, FORLINE, or FORPU. See Using Qualifier Lists in Alert Monitors.

   If desired, you can specify one or more asterisks (*) or question marks (?) in the resource name as follows:

   – One asterisk by itself represents up to eight letters or numbers. For example, RESOURCE NAME=* specifies all known resources of the type specified.

   – One asterisk at the end of the name represents up to seven letters or numbers. For example, RESOURCE NAME=APPL* is the same as APPL?, APPL??, and APPL???.

   – One asterisk in the middle of the name represents only one letter or number. For example, RESOURCE NAME=APPL*2 matches APPL02, APPL12, APPL32, APPL42, etc.

   – One question mark in any position in the name represents only one letter or number. For example, RESOURCE NAME=APPL? matches only APPL1, APPL2, APPL3, etc.

4. Specify a title for the monitor of up to 48 characters (optional).

5. Specify the interval in seconds at which you want NetSpy to monitor the resources. The default is 30. The minimum is the value specified on the ALTBITVL statement in the INITPRM member or file. All intervals specified are rounded to the nearest multiple of the ALTBITVL value. If zero is specified as the interval, the ALTBITVL value is used as the interval value.

6. Optionally change the start and stop times that specify when NetSpy starts and stops monitoring the resources. The defaults are 00:00 for both.

7. Specify where NetSpy sends alert data. You can specify one or more of the destinations below, or ALL for all of them. If you specify both GLOBAL and USER, NetSpy uses the one you specify last and ignores the other one. If you specify SNMP and USER (regardless of whether you specify GLOBAL), SNMP takes precedence over USER.
   - CONSOLE, for the system console
   - GLOBAL, to be displayed on the Global Alerts Display, which only privileged users can access
   - NETVIEW, for NetView (If you specify NETVIEW as the destination, alert data is sent to the NPDA log.)
   - LOG, for the Log (***default***)
   - SMF, for SMF
   - DB, for the Database
   - SNMP, for Unicenter and other SNMP managers. These alerts can also be viewed on the Global Alerts Display.
   - USER, for only the terminal of the user who started the monitor. If you specify USER as the only destination, NetSpy deletes the monitor automatically when you log off and issues the message NSY3163 - *monitorname* USER ALERT MONITOR DELETED AT LOGOFF. If you specify additional destinations, NetSpy continues to run the monitor, but disables user routing for it.
   - ALL, which sends alerts to all of the above destinations except USER.
8. Specify one or more optional nsyxnames of NetSpys to which you want to send the monitor for execution. (Nsyxnames are defined in the NSYXNAME statement in the INITPRM member or file. For more information, see the *NetSpy Administrator Guide*.)

   The default is the local NetSpy where this monitor is being created.
9. Press Enter. You will see a menu for the resource type you specified.
10. On the menu that appears, specify between one and nine variable (threshold) values. You must specify at least one. These variables are described in Monitor Menu Variable Descriptions.
11. Specify whether all or any of these thresholds must be met in order for an alert to be generated. The default is ALL.
12. Press Enter, and you will see the confirmation message:

    `NSY3180 - monitorname MONITOR COMMAND DEFINED SUCCESSFULLY.`

Using Qualifier Lists in Alert Monitors

You can create qualified RLISTs for LU alert monitors by creating any of the following resource lists prior to defining the monitor:

- FORAPPL, which specifies an application
- FORLINE, which specifies a line
- FORPU, which specifies a PU

Follow the procedure outlined below to create RLISTs for an LU alert monitor.

1. At the Resource List Initialization Menu (or with the RLIST command), create at least two new resource lists:
   - Create one with the type LU, including the resource names you want to monitor.
   - Create any others with the types FORAPPL, FORLINE, or FORPU, including any generic resource names you want to specify.
2. At the Monitor Definition Menu, enter a monitor name, the resource type LU, and the resource name RLIST. Specifying "RLIST" here will pick up the qualifier lists you specified in step 1.
3. Define thresholds for the resources.

When alerts are generated, they are filtered (qualified) by the application, line, or PU specifications, depending on how you defined the qualifier lists.

For more information on RLISTs, see "Specifying Resource Lists" in the chapter entitled "Using the Displays."

Application Monitor Variable Definition Menu

```
HOST=IPOX
              *** APPLICATION MONITOR VARIABLE DEFINITION MENU ***

FILL IN THRESHOLD VALUES FOR VARIABLES TO DEFINE MONITOR:

AVG. HOST RESP  >             AVG. HOST RESP  <             (1/10 SECS.)
AVG. NET RESP   >             AVG. NET RESP   <             (1/10 SECS.)
AVG. USER RESP  >             AVG. USER RESP  <             (1/10 SECS.)
WORST HOST RESP >             WORST HOST RESP <             (1/10 SECS.)
WORST NET RESP  >             WORST NET RESP  <             (1/10 SECS.)
NO. OF SESSIONS >             NO. OF SESSIONS <             (COUNT)
BYTE RATE / SEC >             BYTE RATE / SEC <             (COUNT)
TRAN RATE / MIN >             TRAN RATE / MIN <             (COUNT)

MATCH ALL/ANY THRESHOLDS = ALL

LU 6.2 SESSIONS          =    (I/E/O)


F1=HELP   F3=END   F5=APPLS   F6=TERMS   F9=NCPS   F10=LINES   F12=LOGOFF
OPTIONALLY, ENTER A COMMAND BELOW
---->
```

Line Monitor Variable Definition Menu

```
HOST=IPOX
              *** LINE/CLUSTER MONITOR VARIABLE DEFINITION MENU ***

FILL IN THRESHOLD VALUES FOR VARIABLES TO DEFINE MONITOR:

UTILIZATION %       >          UTILIZATION %       <         (PERCENTAGE)
PIU SEGMENTS/MINUTE >          PIU SEGMENTS/MINUTE <         (COUNT)
ERROR COUNTS        >          ERROR COUNTS        <         (COUNT)
OUTBOUND Q LENGTH   >          OUTBOUND Q LENGTH   <         (COUNT)
RETRANSMIT MESSAGES >          RETRANSMIT MESSAGES <         (PERCENTAGE)
RETRANSMIT BYTES    >          RETRANSMIT BYTES    <         (PERCENTAGE)

MATCH ALL/ANY THRESHOLDS = ALL

SET VTAM THRESHOLDS      = N     (Y/N)



F1=HELP   F3=END   F5=APPLS   F6=TERMS   F9=NCPS   F10=LINES   F12=LOGOFF
OPTIONALLY, ENTER A COMMAND BELOW
---->
```

NCP Resource VTAM Monitor Variable Definition Menu

This menu is displayed when you change the value of SET VTAM THRESHOLDS to Y in the preceding Line Monitor Variable Definition Menu.

```
HOST=IPOX

             *** NCP RESOURCE VTAM MONITOR VARIABLE DEFINITION MENU ***

FILL IN THRESHOLD VALUES FOR VARIABLES TO DEFINE MONITOR:

AVG. HOST RESP  >             AVG. HOST RESP  <             (1/10 SECS.)
AVG. NET RESP   >             AVG. NET RESP   <             (1/10 SECS.)
AVG. USER RESP  >             AVG. USER RESP  <             (1/10 SECS.)
WORST HOST RESP >             WORST HOST RESP <             (1/10 SECS.)
WORST NET RESP  >             WORST NET RESP  <             (1/10 SECS.)
MSG RATE / MIN  >             MSG RATE / MIN  <             (1/10 SECS.)
BYTE RATE / SEC >             BYTE RATE / SEC <             (COUNT)
TRAN RATE / MIN >             TRAN RATE / MIN <             (COUNT)

LU 6.2 SESSIONS =             (I/E/O)


F1=HELP  F3=END  F5=APPLS  F6=TERMS  F9=NCPS  F10=LINES  F12=LOGOFF
OPTIONALLY, ENTER A COMMAND BELOW
---->
```

Terminal (LU) Monitor Variable Definition Menu

```
HOST=IPOX
              *** TERMINAL (LU) MONITOR VARIABLE DEFINITION MENU ***

FILL IN THRESHOLD VALUES FOR VARIABLES TO DEFINE MONITOR:

AVG. HOST RESP  >             AVG. HOST RESP  <            (1/10 SECS.)
AVG. NET RESP   >             AVG. NET RESP   <            (1/10 SECS.)
AVG. USER RESP  >             AVG. USER RESP  <            (1/10 SECS.)
WORST HOST RESP >             WORST HOST RESP <            (1/10 SECS.)
WORST NET RESP  >             WORST NET RESP  <            (1/10 SECS.)
MSG RATE / MIN  >             MSG RATE / MIN  <            (COUNT)
BYTE RATE / SEC >             BYTE RATE / SEC <            (COUNT)
TRAN RATE / MIN >             TRAN RATE / MIN <            (COUNT)

MATCH ALL/ANY THRESHOLDS = ALL

LU 6.2 SESSIONS          =    (I/E/O)


F1=HELP   F3=END   F5=APPLS   F6=TERMS   F9=NCPS   F10=LINES   F12=LOGOFF
OPTIONALLY, ENTER A COMMAND BELOW
---->
```

NCP Monitor Variable Definition Menu

```
HOST=IPOX
              *** N  C  P  MONITOR VARIABLE DEFINITION MENU ***

FILL IN THRESHOLD VALUES FOR VARIABLES TO DEFINE MONITOR:

CYCLE UTIL %    >             CYCLE UTIL %    <             (PERCENTAGE)
BUFFER UTIL %   >             BUFFER UTIL %   <             (PERCENTAGE)
CHANNEL HOLD Q  >             CHANNEL HOLD Q  <             (COUNT)

MATCH ALL/ ANY OF THE SPECIFIED CRITERIA TO GENERATE ALERTS: ALL


F1=HELP  F3=END  F5=APPLS  F6=TERMS  F9=NCPS  F10=LINES  F12=LOGOFF
OPTIONALLY, ENTER A COMMAND BELOW
---->
```

Virtual Route Monitor Variable Definition Menu

```
HOST=IPOX
              *** VIRTUAL ROUTE MONITOR VARIABLE DEFINITION MENU ***

FILL IN THRESHOLD VALUES FOR VARIABLES TO DEFINE MONITOR:
AVG NET RESP    >         AVG NET RESP    <          (1/10 SECS.)
PIUS OUT / MIN  >         PIUS OUT / MIN  <          (COUNT)
PIUS IN / MIN   >         PIUS IN / MIN   <          (COUNT)
BLOCKED/HELD %  >         BLOCKED/HELD %  <          (PERCENTAGE)

MATCH ALL/ ANY THRESHOLDS: ALL


F1=HELP  F3=END  F5=APPLS  F6=TERMS  F9=NCPS  F10=LINES  F12=LOGOFF
OPTIONALLY, ENTER A COMMAND BELOW
---->
```

X.25 Monitor Variable Definition Menu

```
HOST=IPOX
                *** X.25 LINES MONITOR VARIABLE DEFINITION MENU ***

FILL IN THRESHOLD VALUES FOR VARIABLES TO DEFINE MONITOR:

UTILIZATION       >          UTILIZATION       <           (PERCENTAGE)
IFRAMES/MINUTE    >          IFRAMES/MINUTE    <           (COUNT)
OUTBOUND Q LENGTH >          OUTBOUND Q LENGTH <           (COUNT)

MATCH ALL/ANY THRESHOLDS = ALL


F1=HELP  F3=END  F5=APPLS  F6=TERMS  F9=NCPS  F10=LINES  F12=LOGOFF
OPTIONALLY, ENTER A COMMAND BELOW
---->
```

X.25 PUs or VCs Monitor Variable Definition Menu

```
HOST=IPOX
            *** X.25 PUS OR VCS MONITOR VARIABLE DEFINITION MENU ***

FILL IN THRESHOLD VALUES FOR VARIABLES TO DEFINE MONITOR:

PACKETS/MINUTE  >             PACKETS/MINUTE  <             (COUNT)

MATCH ALL/ANY THRESHOLDS = ALL


F1=HELP  F3=END  F5=APPLS  F6=TERMS  F9=NCPS  F10=LINES  F12=LOGOFF
OPTIONALLY, ENTER A COMMAND BELOW
---->
```

NTRI Physical Link Monitor Variable Definition Menu

```
HOST=IPOX
           *** NTRI PHYSICAL LINK MONITOR VARIABLE DEFINITION MENU ***

FILL IN THRESHOLD VALUES FOR VARIABLES TO DEFINE MONITOR:

TIC UTILIZATION    >          TIC UTILIZATION    <          (PERCENTAGE)
IFRAMES/MINUTE     >          IFRAMES/MINUTE     <          (COUNT)
BYTES/SECOND       >          BYTES/SECOND       <          (COUNT)
RETRANSMIT IFRAMES >          RETRANSMIT IFRAMES <          (COUNT)
RETRANSMIT BYTES   >          RETRANSMIT BYTES   <          (COUNT)
OUTBOUND Q LENGTH  >          OUTBOUND Q LENGTH  <          (COUNT)
ACTIVE CONNECTIONS >          ACTIVE CONNECTIONS <          (COUNT)
CONGESTION COUNT   >          CONGESTION COUNT   <          (COUNT)

MATCH ALL/ANY THRESHOLDS = ALL

F1=HELP  F3=END  F5=APPLS  F6=TERMS  F9=NCPS  F10=LINES  F12=LOGOFF
OPTIONALLY, ENTER A COMMAND BELOW
---->
```

NTRI Logical Link Monitor Variable Definition Menu

```
HOST=IPOX
               *** NTRI LOGICAL LINK MONITOR VARIABLE DEFINITION MENU ***

FILL IN THRESHOLD VALUES FOR VARIABLES TO DEFINE MONITOR:

IFRAMES/MINUTE     >             IFRAMES/MINUTE     <             (COUNT)
BYTES/SECOND       >             BYTES/SECOND       <             (COUNT)
RETRANSMIT FRAMES  >             RETRANSMIT FRAMES  <             (COUNT)
RETRANSMIT BYTES   >             RETRANSMIT BYTES   <             (COUNT)
OUTBOUND Q LENGTH  >             OUTBOUND Q LENGTH  <             (COUNT)
TIMEOUTS           >             TIMEOUTS           <             (COUNT)

MATCH ALL/ANY THRESHOLDS = ALL


F1=HELP  F3=END  F5=APPLS  F6=TERMS  F9=NCPS  F10=LINES  F12=LOGOFF
OPTIONALLY, ENTER A COMMAND BELOW
---->
```

TIC3 Link Monitor Variable Definition Menu

```
HOST=IPOX
                *** TIC3 LINK MONITOR VARIABLE DEFINITION MENU ***

FILL IN THRESHOLD VALUES FOR VARIABLES TO DEFINE MONITOR:

UTILIZATION %      >             UTILIZATION %      <            (PERCENT)
IFRAMES/MINUTE     >             IFRAMES/MINUTE     <            (COUNT)
BYTES/SECOND       >             BYTES/SECOND       <            (COUNT)
RETRANSMIT IFRAMES >             RETRANSMIT IFRAMES <            (COUNT)
RETRANSMIT BYTES   >             RETRANSMIT BYTES   <            (COUNT)
ERROR FRAMES       >             ERROR FRAMES       <            (COUNT)

MATCH ALL/ANY THRESHOLDS = ALL


F1=HELP  F3=END  F5=APPLS  F6=TERMS  F9=NCPS  F10=LINES  F12=LOGOFF
OPTIONALLY, ENTER A COMMAND BELOW
---->
```

TIC3 PU Monitor Variable Definition Menu

```
HOST=IPOX
                *** TIC3 PU MONITOR VARIABLE DEFINITION MENU ***

FILL IN THRESHOLD VALUES FOR VARIABLES TO DEFINE MONITOR:

UTILIZATION %      >             UTILIZATION %      <             (PERCENT)
IFRAMES/MINUTE     >             IFRAMES/MINUTE     <             (COUNT)
BYTES/SECOND       >             BYTES/SECOND       <             (COUNT)
RETRANSMIT IFRAMES >             RETRANSMIT IFRAMES <             (COUNT)
RETRANSMIT BYTES   >             RETRANSMIT BYTES   <             (COUNT)
ERROR FRAMES       >             ERROR FRAMES       <             (COUNT)
TIMEOUTS           >             TIMEOUTS           <             (COUNT)

MATCH ALL/ANY THRESHOLDS = ALL


F1=HELP  F3=END  F5=APPLS  F6=TERMS  F9=NCPS  F10=LINES  F12=LOGOFF
OPTIONALLY, ENTER A COMMAND BELOW
---->
```

Ethernet Physical Link Monitor Variable Definition Menu

```
HOST=IPOX
       *** ETHERNET PHYSICAL LINK MONITOR VARIABLE DEFINITION MENU ***

FILL IN THRESHOLD VALUES FOR VARIABLES TO DEFINE MONITOR:

IFRAMES/MINUTE         >         IFRAMES/MINUTE         <        (COUNT)
BYTES/SECOND           >         BYTES/SECOND           <        (COUNT)
CONGESTION COUNT       >         CONGESTION COUNT       <        (COUNT)
DEFERRED TRANSMISSIONS >         DEFERRED TRANSMISSIONS <        (COUNT)
OUTBOUND Q LENGTH      >         OUTBOUND Q LENGTH      <        (COUNT)
SINGLE COLLISIONS      >         SINGLE COLLISIONS      <        (COUNT)
MULTIPLE COLLISIONS    >         MULTIPLE COLLISIONS    <        (COUNT)
DISCARDED IP FRAMES    >         DISCARDED IP FRAMES    <        (COUNT)

MATCH ALL/ANY THRESHOLDS = ALL


F1=HELP  F3=END  F5=APPLS  F6=TERMS  F9=NCPS  F10=LINES  F12=LOGOFF
OPTIONALLY, ENTER A COMMAND BELOW
---->
```

Frame Relay Physical Link Monitor Variable Definition Menu

```
HOST=IPOX
     *** FRAME RELAY PHYSICAL LINK MONITOR VARIABLE DEFINITION MENU ***

FILL IN THRESHOLD VALUES FOR VARIABLES TO DEFINE MONITOR:

IFRAMES/MINUTE      >          IFRAMES/MINUTE      <          (COUNT)
BYTES/SECOND        >          BYTES/SECOND        <          (COUNT)
OUTBOUND Q LENGTH   >          OUTBOUND Q LENGTH   <          (COUNT)
RETRANSMIT FRAMES   >          RETRANSMIT FRAMES   <          (COUNT)
RETRANSMIT BYTES    >          RETRANSMIT BYTES    <          (COUNT)
DISCARDED FRAMES    >          DISCARDED FRAMES    <          (COUNT)
FORWARD CONGESTION  >          FORWARD CONGESTION  <          (COUNT)
BACKWARD CONGESTION >          BACKWARD CONGESTION <          (COUNT)

MATCH ALL/ANY THRESHOLDS = ALL


F1=HELP  F3=END  F5=APPLS  F6=TERMS  F9=NCPS  F10=LINES  F12=LOGOFF
OPTIONALLY, ENTER A COMMAND BELOW
---->
```

Frame Relay Logical Link Monitor Variable Definition Menu

```
HOST=IPOX
       *** FRAME RELAY LOGICAL LINK MONITOR VARIABLE DEFINITION MENU ***

FILL IN THRESHOLD VALUES FOR VARIABLES TO DEFINE MONITOR:

IFRAMES/MINUTE      >          IFRAMES/MINUTE      <          (COUNT)
BYTES/SECOND        >          BYTES/SECOND        <          (COUNT)
OUTBOUND Q LENGTH   >          OUTBOUND Q LENGTH   <          (COUNT)
RETRANSMIT FRAMES   >          RETRANSMIT FRAMES   <          (COUNT)
RETRANSMIT BYTES    >          RETRANSMIT BYTES    <          (COUNT)
FORWARD CONGESTION  >          FORWARD CONGESTION  <          (COUNT)
BACKWARD CONGESTION >          BACKWARD CONGESTION <          (COUNT)

MATCH ALL/ANY THRESHOLDS = ALL


F1=HELP  F3=END  F5=APPLS  F6=TERMS  F9=NCPS  F10=LINES  F12=LOGOFF
OPTIONALLY, ENTER A COMMAND BELOW
---->
```

Frame Relay PU Monitor Variable Definition Menu

```
HOST=IPOX
          *** FRAME RELAY PU MONITOR VARIABLE DEFINITION MENU ***
FILL IN THRESHOLD VALUES FOR VARIABLES TO DEFINE MONITOR:
IFRAMES/MINUTE      >          IFRAMES/MINUTE      <          (COUNT)
BYTES/SECOND        >          BYTES/SECOND        <          (COUNT)
OUTBOUND Q LENGTH   >          OUTBOUND Q LENGTH   <          (COUNT)
DISCARDED FRAMES    >          DISCARDED FRAMES    <          (COUNT)
FORWARD CONGESTION  >          FORWARD CONGESTION  <          (COUNT)
BACKWARD CONGESTION >          BACKWARD CONGESTION <          (COUNT)
MATCH ALL/ANY THRESHOLDS = ALL
F1=HELP  F3=END  F5=APPLS  F6=TERMS  F9=NCPS  F10=LINES  F12=LOGOFF
OPTIONALLY, ENTER A COMMAND BELOW
---->
```

Monitor Menu Variable Descriptions

The following table explains all the parameters on the various Monitor Definition menus.

Variable (Threshold)	Description
ACTIVE CONNECTS	Number of active connections during the interval
AVG HOST RESP	Average host response time during the interval
AVG NET RESP	Average network response time during the interval
AVG USER RESP	Average user response time during the interval
BLOCKED/HELD %	Percentage of virtual routes blocked or held during the interval
BUFFER UTIL %	Percentage of the NCP buffer used during the interval

Variable (Threshold)	Description
BYTE RATE / SEC	Average number of bytes that the resource sends or receives during each second of the interval
BYTES/SECOND	Number of bytes per second that the resource sends or receives during the interval
CONGESTION BACK	Number of congestions back
CONGESTION COUNT	Congestion count during the interval
CONGESTION FORWARD	Number of congestions forward
CYCLE UTIL	Average NCP cycle utilization during the interval
CHANNEL HOLD Q	Channel hold queue (the number of messages sent to the host, but not yet acknowledged) when the data was collected
DEFERRED TRANS	Number of transmissions deferred during the interval
DISCARDED FRAMES	Number of I-frames discarded during the interval
DISCARDED IP FRAMES	Number of IP frames discarded during the interval.
ERROR COUNT	Number of errors that occur during the interval
ERROR FRAMES	Number of error frames. For TIC3LINK, this is the sum of misaddressed, discarded and unrecognized frames. For TIC3PU, this is the number of rejected frames sent and received.
IFRAMES/MINUTE	Number of I-frames per minute during the interval
MSG RATE / MIN	Average number of messages that the resource sends or receives during each minute of the interval
MULT COLLISIONS	Number of multiple collisions during the interval
ONE COLLISION	Number of single collisions during the interval
OUT Q LENGTH	Output queue length (the number of messages queued to be output) when the data was collected
PIUS IN / MIN	Average number of PIUs that the resource sends during each minute of the interval
PIUS OUT / MIN	Average number of PIUs that the resource receives during each minute of the interval
REJECTED FRAMES	Number of sent/received frames that were rejected during the interval

Variable (Threshold)	Description
RETRANSMIT BYTES	Number of bytes that are retransmitted during the interval. For LINES/CLUSTER, the percentage of bytes retransmitted.
RETRANSMIT FRAMES	Number of IFRAMEs that are retransmitted during the interval
RETRANSMIT MESSAGES	The percentage of messages retransmitted during the interval
TIC UTILIZATION	Percentage of TIC being utilized during the interval
TIMEOUTS	The number of timeouts (for TIC3, the number of LAN T2 timeouts) that occurred during the interval
TRAN RATE / MINUTE	Number of transactions that the resource sends or receives during the interval
UTILIZATION % (or UTILIZATION)	Percentage of the resource used during the interval. **Note:** For full duplex lines, it is the percentage of capacity of the send line *or* receive line. For half duplex lines, it is the percentage of the *total* capacity of the line. An alert will occur if the PLNU or SNLU value exceeds the threshold.
WORST HOST RESP	Worst host response time during the interval
WORST NET RESP	Worst network response time during the interval
NO. OF SESSIONS	Number of sessions running concurrently with the application during the interval

Monitor Deletion Main Menu

This menu lets you delete a monitor.

```
HOST=IPOX
            *** NETSPY MONITOR DELETION MAIN MENU ***

   FILL IN FOLLOWING DATA FIELD TO DELETE THE MONITOR:

   MONITOR  NAME =
```

How to Access

Do one of the following:

- When you select option 2, Delete Monitors, on the General Alert System Selection Menu, you see the menu shown above.
- At the command line of any NetSpy screen, enter DELMON.

How to Use

To delete a monitor, simply specify its name and press Enter.

- If you specified a valid monitor name, you will see the message:

  NSY3190 - *monitorname* MONITOR COMMAND WILL BE DELETED.

- If you specified an invalid monitor name, you will see the message:

  NSY3191 - *monitorname* MONITOR COMMAND DOES NOT EXIST, REQUEST IGNORED.

  If this happens, check the monitor name and try again.

Monitor Status Display

This screen displays the status of active monitors.

```
HOST=XE44*** NETSPY MONITOR STATUS DISPLAY *** 06JUN2001.157 WED 10:59:33 *R*

 MONITOR   NETSPY   MONITOR   RESOURCE   RESOURCE   ITVL     ALERT     ALERT
 NAME      NAME     ITVL(SEC)   TYPE       NAME     COUNT    COUNT     PERCENT
 APPLX     A04IVS20    30.00    APPL     ALL            5        0         0 %
     ALERT DESTINATIONS: GLOBAL, CONSOLE
     TITLE: APPLICATION MONITOR 2                              MATCH: ANY
     AVERAGE HOST RESPONSE TIME      >     0.0
     TRANSACTION RATE PER MINUTE     >       0

 APPLEPSX  A04IVS20    30.00    APPL     ALL            5        0         0 %
     ALERT DESTINATIONS: CONSOLE, NMEPS
     TITLE: APPLICATION MONITOR                                MATCH: ANY
     AVERAGE HOST RESPONSE TIME      >     0.0
     TRANSACTION RATE PER MINUTE     >       0


 F1=HELP    F3=END    F5=APPLS    F6=TERMS    F9=NCPS    F10=LINES    F12=LOGOFF
  OPTIONALLY, ENTER A COMMAND BELOW
 ---->
```

How to Access

Do one of the following:

- On the General Alert System Selection Menu, choose option 3, Display Monitor Status.
- At the command line of any NetSpy screen, enter DISMON.

How to Use

This display defaults to refresh mode. You can take it out of and put it back into refresh mode using the Enter and F2 keys, respectively.

This display contains the fields shown in the example above on each monitor that is currently active. If the current time is not between the start time and the stop time, the monitor is not active and will not appear.

Global Alerts Display

This screen displays global general alerts generated by various monitors with a destination of GLOBAL. Each alert specifies which resource type the alert occurred for, and what the actual response was compared to the threshold for the resource.

```
HOST=IPOX  *** NETSPY GLOBAL ALERTS DISPLAY ***  04JAN99.003 MON 10:17:49 ***
MONITOR     TIME     DATE    RESOURCE  RESOURCE   FORAPPL    FORLINE    FORPU
 NAME                          NAME      TYPE
LURSPMON  09:49:00  04JAN99  TPXP109      LU      TSO28
   NETSPY: NETSPY    TITLE:  TERMINAL RESPONSE TIME MONITOR
   AVERAGE USER RESPONSE TIME    10.2 EXCEEDS THE THRESHOLD OF     3.0

LURSPMON  09:49:00  04JAN99  TPXP120      LU      TSO28
   NETSPY: NETSPY    TITLE:  TERMINAL RESPONSE TIME MONITOR
   AVERAGE USER RESPONSE TIME     4.8 EXCEEDS THE THRESHOLD OF     3.0

LURSPMON  09:49:00  04JAN99  TPXI009      LU      TSO28
   NETSPY: NETSPY    TITLE:  TERMINAL RESPONSE TIME MONITOR
   AVERAGE USER RESPONSE TIME     3.2 EXCEEDS THE THRESHOLD OF     3.0

APPLMON   09:49:00  04JAN99  SCON28      APPL       N/A        N/A        N/A
   NETSPY: NETSPY    TITLE:  APPLICATION BYTE RATE MONITOR
   BYTE RATE PER SECOND    2016 EXCEEDS THE THRESHOLD OF     1500


F1=HELP  F3=END  F5=APPLS  F6=TERMS  F9=NCPS  F10=LINES  F12=LOGOFF
OPTIONALLY, ENTER A COMMAND BELOW
---->
```

How to Access

Do one of the following:

- On the General Alert System Selection Menu, choose option 4, Display Global Alerts.
- At the command line of any NetSpy screen, enter DGALERT.

How to Use

This display defaults to refresh mode. You can take it out of and put it back into refresh mode using the Enter and F2 keys, respectively. To scroll through multiple pages of this display, use the F7 (scroll up) and F8 (scroll down) keys.

This display contains the fields shown on the sample screen above on each global alert that has occurred since the monitor was started.

Note: If desired, you can be notified each time a global alert is issued. For information about how to set this up, see Activating Alert Warnings.

User Alerts Display

This screen displays user general alerts. User alerts are generated by monitors with a destination of USER.

```
HOST=IPOX  *** NETSPY  USER  ALERTS DISPLAY ***  04JAN99.337 FRI 10:55:34 ***
MONITOR     TIME     DATE    RESOURCE  RESOURCE   FORAPPL    FORLINE    FORPU
 NAME                          NAME      TYPE
TMONITOR  10:50:30  04JAN99  TPXP011      LU      SCON28
   NETSPY: NETSPY    TITLE:  TERMINAL MONITOR FOR HIGH BYTE RATE/SEC
   BYTE RATE PER SECOND          95 EXCEEDS THE THRESHOLD OF   1000

TMONITOR  10:50:30  04JAN99  TPXP121      LU      TSO28
   NETSPY: NETSPY    TITLE:  TERMINAL MONITOR FOR HIGH BYTE RATE/SEC
   BYTE RATE PER SECOND         233 EXCEEDS THE THRESHOLD OF   1000

TMONITOR  10:50:30  04JAN99  TPXP018      LU      TSO28
   NETSPY: NETSPY    TITLE:  TERMINAL MONITOR FOR HIGH BYTE RATE/SEC
   BYTE RATE PER SECOND          95 EXCEEDS THE THRESHOLD      1000

TMONITOR  10:50:00  04JAN99  TPXP001      LU      NSTEST
   NETSPY: NETSPY    TITLE:  TERMINAL MONITOR FOR HIGH BYTE RATE/SEC
   BYTE RATE PER SECOND         387 EXCEEDS THE THRESHOLD OF   1000


F1=HELP  F3=END  F5=APPLS  F6=TERMS  F9=NCPS  F10=LINES  F12=LOGOFF
OPTIONALLY, ENTER A COMMAND BELOW
---->
```

How to Access

Do one of the following:

- Choose option 5 (Display User Alerts) from the General Alerts System Selection Menu.
- Enter DUALERT from the command line of any screen.

How to Use

This display defaults to refresh mode. You can toggle refresh mode on and off using the F2 key. To scroll through multiple pages of this display, use the F7 (scroll up) and F8 (scroll down) keys.

This display contains the fields shown in the sample screen above for each user alert that occurred since the monitor was started.

Note: If desired, you can be notified each time that an alert is issued by a monitor you defined. For information about how to set this up, see Activating Alert Warnings.

Activating Alert Warnings

When alert warnings are activated, you will receive this message at your terminal each time a global alert or a user alert (generated by a monitor that you created) is issued:

```
NSY3150 - NETSPY ALERTS ISSUED
```

To activate alert warnings on the General Alert System Selection Menu, choose option 6, Activate Alert Warning. You will see this confirmation message:

```
NSY3195 - ALERT WARNING FEATURE ACTIVATED
```

Inactivating Alert Warnings

When alert warnings are inactivated, you will not be notified at your terminal each time a global or user alert (generated by a monitor that you created) is issued.

To inactivate alert warnings on the General Alert System Selection Menu, choose option 7, Inactivate Alert Warning. You will see this confirmation message:

```
NSY3196 - ALERT WARNING FEATURE INACTIVATED
```

Using Graphic Alerts

NetSpy's graphic alerts display real-time data in graphic format and use highlighted bars and monitor alarms to indicate when portions of your network have exceeded specified thresholds.

The default values that set the thresholds and whether the alarm on your monitor sounds are contained in the GRAPHPRM member of file. These values are displayed on the Graphic Alerts Customization Menu when you first log on to NetSpy. You can change these values in two ways:

- Using the Graphic Alerts Customization Menu, which applies and stores the changes only until you log off
- Modifying the GRAPHPRM member or file, which changes the values for every NetSpy session.

The graphic alerts function uses both NCP and VTAM statistics from NetSpy's regular monitoring and *not* from the tracing facilities. Using graphic alerts, you can generate up to 46 graphs on six different resource types. And, you can compare data from multiple resources on one screen simultaneously.

Graphic Alerts Main Menu

This menu lets you access the graphic alert selection and customization options.

```
HOST=S008          *** NETSPY GRAPHIC ALERTS SYSTEM MENU ***

  SELECT AN OPTION
  ====>

           1 - GRAPHICS SELECTION
           2 - GRAPHICS CUSTOMIZATION

F1=HELP  F3=END  F5=APPLS  F6=TERMS  F9=NCPS  F10=LINES  F12=LOGOFF
OPTIONALLY, ENTER A COMMAND BELOW
---->
```

How to Access

On the Alert Systems Selection Menu, choose option 2, Graphic Alerts.

How to Use

Type the number that corresponds to the option that you want and press Enter. The two options are described in the following table.

Options on the Graphic Alerts System Menu

Option	Description
Graphics Selection	For specifying the resource-type variables for which you want to generate graphs and whether you want to use resource lists
Graphics Customization	For specifying the thresholds (scales) to be used for variables on the graphs. You can also specify whether your terminal beeps when the variable exceeds the threshold, and how data on different resources is organized on each graph.

Graphic Alerts Customization Menu

This menu lets you specify:

- Variable thresholds that generate graphic alerts
- Whether your terminal beeps when a graphics alert occurs
- How data about different resources is organized on each graph.

```
HOST=S008      *** NETSPY GRAPHIC ALERTS CUSTOMIZATION MENU ***

  PLEASE OVERRIDE DEFAULTS IF DESIRED AND PRESS F10 TO UPDATE

RESOURCE          GRAPH            ALERT     SCALE      ALARM      SORT
  TYPE            TITLE            SCALE     UNITS      (Y/N)     OPTION
APPL         AVG. HOST RESP       000055   1/10 SECS.     N
             AVG. NET RESP        000055   1/10 SECS.     N
             AVG. USER RESP       000085   1/10 SECS.     N
             WORST HOST RESP      000300   1/10 SECS.     N
             WORST NET RESP       000300   1/10 SECS.     N
             NO. OF SESSIONS      000200        COUNT     N
             BYTE RATE / SEC      000500        COUNT     N
             TRANS RATE / MIN     000120        COUNT     N         W
NCP          CYCLE UTIL %         000050   PERCENTAGE     N         W
             BUFFER UTIL %        000050   PERCENTAGE     N
             CHANNEL HOLD Q       000005        COUNT     N
LINE         AVG. HOST RESP       000050   1/10 SECS.     N
             AVG. NET RESP        000050   1/10 SECS.     N
             AVG. USER RESP       000080   1/10 SECS.     N
             WORST HOST RESP      000300   1/10 SECS.     N

F1=HELP  F3=END  F7=UP  F8=DOWN  F10=UPDATE  F11=RESTORE DEFAULTS
OPTIONALLY, ENTER A COMMAND BELOW
 ---->
```

How to Access

On the Graphic Alerts System Menu, select option 2, Graphics Customization.

How to Use

The illustration above shows the first screen of this menu. There are one or two more screens for this menu, depending on the size of your screen.

The default values for this menu are specified in the GRAPHPRM member or file. Any changes you make to this menu override those default values.

To change a default, type over it and press the F10 or F22 key to save the change. To restore the defaults, press the F11 or F23 key.

This screen contains the fields described below. You can change all of them except for the SCALE UNITS field.

Graphic Alerts Customization Menu Fields

The table below describes the meanings of the column headings on the Graphic Alerts Customization Menu.

Field	Description
RESOURCE TYPE	The resource type: APPL, NCP, LINE, PU, LU, or VR.
GRAPH TITLE	The variable name to appear on the graph
ALERT SCALE	The threshold for the variable. If this threshold is exceeded, the terminal alarm may sound, and the bar is highlighted.
SCALE UNITS	The unit of measure for the scale, such as seconds, numbers, or percentages. You can not change this field.
ALARM (Y/N)	Specifies whether you want the terminal alarm to sound when the alert scale (threshold) is exceeded.
SORT OPTION	Specifies which variable values you want to sort all resources of this type by. For example, you may want to sort all of the APPL graphs based on average host response time. You can sort on one variable for each resource type and by either the worst or best values for the variable. To sort by the best values, type B in the SORT OPTION field for that variable. To sort by the worst values, type W in the field. If you specify more than one variable for a resource type, NetSpy uses the last variable specified and ignores the others. **Note:** NetSpy sorts the graphs based on the specified variable values regardless of whether you chose that variable on the Graphic Alerts Selection Menu. For example, if you specified a sort option of worst average host response times for APPLs, and then chose APPL number of sessions on the Graphic Alerts Selection Menu, the resulting graph would list the applications in the order of average host response times.

Graphic Alerts Selection Menu

This menu lets you specify the resource-type variables for which you want to generate graphs.

```
HOST=S008       *** NETSPY GRAPHIC ALERTS SELECTION MENU ***

 SELECT INFORMATION TO BE DISPLAYED (S/R):       LU 6.2 SESSIONS =    (I/E/O)

 APPL _ AVG. HOST RESP  _ AVG. NET RESP   _ AVG. USER RESP  _ WORST HOST RESP
      _ WORST NET RESP  _ NO. OF SESSIONS _ BYTE RATE/SEC   _ TRANS RATE/MIN

 NCP  _ CYCLE UTIL %    _ BUFFER UTIL %   _ CHANNEL HOLD Q

 LINE _ AVG. HOST RESP  _ AVG. NET RESP   _ AVG. USER RESP  _ WORST HOST RESP
      _ WORST NET RESP  _ MSG RATE/MIN    _ BYTE RATE/SEC   _ TRANS RATE/MIN
      _ UTILIZATION %   _ PIU SEG./MINUTE _ ERROR COUNTS    _ OUT Q LENGTH

 PU   _ AVG. HOST RESP  _ AVG. NET RESP   _ AVG. USER RESP  _ WORST HOST RESP
      _ WORST NET RESP  _ MSG RATE/MIN    _ BYTE RATE/SEC   _ TRANS RATE/MIN
      _ UTILIZATION %   _ PIU SEG./MINUTE _ ERROR COUNTS    _ OUT Q LENGTH

 LU   _ AVG. HOST RESP  _ AVG. NET RESP   _ AVG. USER RESP  _ WORST HOST RESP
      _ WORST NET RESP  _ MSG RATE/MIN    _ BYTE RATE/SEC   _ TRANS RATE/MIN

 VR   _ AVG. NET RSP.   _ PIUS OUT / MIN  _ PIUS IN / MIN   _ BLOCKED/HELD %


F1=HELP  F3=END  F5=APPLS  F6=TERMS  F9=NCPS  F10=LINES  F12=LOGOFF
OPTIONALLY, ENTER A COMMAND BELOW
---->
```

How to Access

On the Graphic Alerts System Menu, select option 1, Graphics Selection.

How to Use

Fill in the LU 6.2 SESSIONS field using one of the following values:

I Displays both LU 6.2 and non-LU 6.2 information. (Default)

E Excludes LU 6.2 information from the display.

O Displays only information from LU 6.2 sessions.

You can select variables for these resource types:

APPL

LINE

LU (terminal or application)

NCP

PU (cluster)

VR (virtual route)

You can select variables to be graphed for either all known resources of a particular type, or the resources in the resource list for the particular resource type.

Select one or more variables for a particular type of resource by typing either the letter S or R beside the variable:

- S to display alert data for all known resources of that type
- R to display all resources in the resource list for that type

Resource lists contain specific or generic resource names to be included in or excluded from graphic and trace alert displays. Resource lists can also contain the names of one or more files that in turn contain specific resource names.

The following shows the resource lists used for graphic alerts for each resource type:

Resource	Resource Lists Used
APPL	APPL
LINE	LINE
LU	LU, FORPU, FORLINE and FORAPPL. The resource must match all defined LU, FORPU, FORLINE, and FORAPPL resource lists.
NCP	NCP
PU	PU
VR	VR and SA

You can create resource lists through either the Resource List Initialization Menu or the RLIST explicit command.

Note: Where available, the MSG RATE/MIN, BYTE RATE/SEC, and TRANS RATE/MIN variables relate to VTAM data.

Most screens can display a maximum of four resource types at a time. Your particular screen may display more.

Viewing Graphic Alert Displays

The display of the bars (the variable values) of each graph depends on whether you have a color or monochrome monitor:

- If you have color monitor, bars that have exceeded the alert scale are red and those that have not are green.
- If you have a monochrome monitor with reverse video capability, bars that have exceeded the alert scale appear as a row of high intensity reverse video hyphens (-) and those that have not appear as a row of normal intensity hyphens.
- If you have a monochrome monitor without reverse video capability, bars that have exceeded the alert scale appear as a row of greater than signs (>) and those that have not appear as a row of hyphens (-).

Function Keys

You can use the following function keys in the graphic alerts facility:

Key	Function
F1	Accesses online help
F2	Deactivates refresh mode for current interval statistics so that the screen is refreshed at every base interval. To reactivate refresh mode, press F2 again. The BASEITVL statement in the INITPRM file sets the base interval.
PA1	Recalls the last explicit command entered
PA2	Recalls the data previously cleared on a menu
F4/F16	Deletes the graph
F7/F19	Pages backward
F8/F20	Pages forward
CLEAR	Clears data input fields on a menu

Note: Each graph or set of graphs has its own command line. To use a function key function such as F8 (scroll down) on a particular graph, make sure that the cursor is on the correct command line.

Display Notes

When N/A (not available) is displayed on a graph, NetSpy is not collecting the information needed to calculate the value. This can occur under the following conditions:

- When you select both VTAM and NCP data to be displayed for a resource and NetSpy is not monitoring the NCP.
- When you request both VTAM and NCP data and the resource shown is defined in a local major node.
- When you request line or PU utilization percent and line speed is not coded in the NCP.

When you select applications, NetSpy displays data only for applications with active sessions.

When you select logical units (LU), only those currently in session are shown. NetSpy shows each session as a separate resource in the graph. Mapped virtual terminal sessions are excluded from the graph unless a FORAPPL resource list is being used. (Mapped virtual terminal sessions have a "V" in the VL column on the Terminal Traffic and Response Time display.)

GMAXENT Parameter

The maximum number of resources listed on each graph is determined by the GMAXENT statement in the INITPRM member of file.

For best results, set the GMAXENT statement as follows based on whether you plan to monitor LUs:

- If you do, set GMAXENT to the value of MAXLU.
- If you do not, set GMAXENT to the number of PUs, lines, or APPLs, whichever is higher.

Keep in mind that if, for example, you set the GMAXENT statement to 100, the alert displays will list data from 100 random resources, rather than the 100 worst or best resources.

Using Trace Alerts

NetSpy's trace alert system notifies you when your specified threshold for network, host, or user response time has been exceeded. When NetSpy determines that the response time is higher for a transaction than the threshold specified on the TRACENET, TRACEHST, or TRACEUSR parameter, it creates an exception trace entry. It displays the statistics online at your request.

You can specify the TRACENET, TRACEHST, and TRACEUSR parameters globally or at an individual application level on an APPL statement.

NetSpy displays trace alert statistics on the Trace Alert System Display, described in the next section.

Note: The resources for which data is displayed on Trace Alert System Display depend on whether you have created a FORAPPL or LU resource list. Resource lists contain specific resource names to be included in or excluded from graphic and trace alert displays. Resource lists can also contain the names of one or more files that in turn contain specific resource names. If there are no FORAPPL or LU resource lists, data on all known APPLs and LUs appears in the display.

You can create resource lists through either the Default Resource List Initialization Menu or the RLIST explicit command.

Trace Alert System Display

This screen displays exception and transaction-all transaction trace alerts. It lists trace alerts for various terminals, providing host and network response times

```
HOST=IPOX ** NETSPY TRACE ALERT SYSTEM DISPLAY ** 12JAN99.349 TUE 15:32:43 *R*
     TIME       DATE        APPL          LU        HOST        NET
                            NAME         NAME       RESP       RESP
  15:32:04.2  12JAN99    TSO2        TPXP155     15.9        0.1
  15:30:59.6  12JAN99    VM10        DVML040     11.2        0.0
  15:30:54.7  12JAN99    TSO2        TPXP126     22.5        0.0
  15:30:37.1  12JAN99    VM10        DVML040      9.5        0.0
  15:28:00.0  12JAN99    VM10        DXAL071     60.0        0.0
  15:27:59.3  12JAN99    VM10        TPXP146     60.0        0.3
  15:27:52.1  12JAN99    VM10        TPXP009     37.2        0.1
  15:27:50.5  12JAN99    VM10        TPXP109     10.0        0.1
  15:27:23.0  12JAN99    VM10        DXAL045      8.9        0.0
  15:27:13.3  12JAN99    VM10        TPXP009     39.6        3.0
  15:26:00.8  12JAN99    TSO2        TPXP006     21.1        0.1
  15:25:28.0  12JAN99    TSO2        TPXP006     14.4        0.1
  15:25:21.9  12JAN99    TSO2        TPXP155      7.1        0.2
  15:25:08.7  12JAN99    VM10        DXAL045      8.4        0.0
  15:24:48.5  12JAN99    VM10        DXAL042     11.1        0.0

  F1=HELP  F3=END  F5=APPLS  F6=TERMS  F9=NCPS  F10=LINES  F12=LOGOFF
  OPTIONALLY, ENTER A COMMAND BELOW
  ---->
```

How to Access

Access in two ways:

- On the NetSpy Main Menu, select option 7, Alerts. Then, on the Alerts System Selection Menu, select option 3, Trace Alerts Display.
- Enter DALRT from the command line of any screen.

How to Use

The top line of the screen displays the current date and time. By default, NetSpy refreshes, or updates, this screen every 30 seconds.

- To suppress REFRESH mode, press the Enter key.
- To reenter REFRESH mode, press the F2 key.

You should have 5-10 minutes worth of data on your screen at a time. If you have more than this, set the TRACENET, TRACEHST, and TRACEUSR thresholds higher and check for possible network problems. Statistics are displayed *only* when thresholds are exceeded.

Note: Periodically, NetSpy purges old entries (keeping only the number of entries determined by MAXTRACE x 2) to make room for new entries. This explains why old entries are erased from the trace alert display.

Chapter

11 Using Network Accounting

NetSpy supports two types of network accounting that you can use to collect complete session statistics for your network:

- Session accounting, supported in NCP Versions 4.3 and 5.2 and above
- Gateway accounting, supported in NCP Versions 4.3.1 and 5.2.1 and above

Network session accounting includes the collection of network statistics from the start of a session to its end for low-end (boundary) network sessions. Gateway accounting includes session statistics for SNI sessions. Both types of network statistics are NCP statistics.

Log Destinations

Network accounting statistics are logged separately from the other NetSpy log data to one of the log destinations (no multiple destinations). Also, network session accounting (NSA) statistics are logged separately from the network gateway accounting (GWA) statistics. You can print the information from these accounting records in batch reports.

Network Statistics

The network statistics include the following items:

- Number of bytes sent during the session
- Number of bytes received during the session
- Number of path information units (PIUs) sent during the session
- Number of PIUs received during the session
- The session information listed below:

Item	Description
SLU name	Secondary logical unit, a specific or generic terminal name, or a specific or generic application name.
PLU name	Primary logical unit, the ACB name or real VTAM name of the application.
Associated PU name	Name of the PU used by this session.
Associated line name	Name of the line used by this session.
Associated NCP name	Name of the NCP used by this session.
Host name	Name of the host on which NetSpy is running.
Network name	Name of the network being monitored.
SLU and PLU network addresses	Network addresses of the LU name and application name.
Session start time	The start time of a session.
Session end time	The end time of a session.
VR, ER, TP	Virtual and explicit routes and transmission priority for the session.
PIU distribution thresholds	Target buckets for six PIU sizes (NCP Versions 4.3.1 and 5.2.1).

Gateway information (NCP Versions 4.3.1 and 5.2.1) also includes:

- Adjacent network ID of PLU
- Adjacent network ID of SLU
- PIU size distribution thresholds (NCP Versions 4.3.1 and 5.2.1) which define up to six possible PIU size ranges for a network session
- ALIAS names for the PLU/SLU

Statements to Include in the NCP Generation

The statement you include in the NCP generation differs, depending on whether you want to run network session accounting or gateway accounting, as explained below.

For Session Accounting

Generate the NCP by specifying NPA=YES and SESSACC=YES on the BUILD macro. NetSpy uses the NCP SESSACC parameter specified for the PIU byte and PIU distribution thresholds. If no thresholds are specified, NetSpy uses the following default statements:

NCP V4.3 and 5.2:

```
SESSACC=(YES,ALL,,25000,2500)
```

NCP V4.3.1 and 5.2.1:

```
SESSACC=(YES,ALL,,25000,2500,,0)
```

The default statements above use the following values:

Value	Description
YES	Network session accounting is available on this NCP.
ALL	Specifies that accounting statistics be collected on both PLU and SLU sessions.
25000	Specifies the byte threshold to exceed before sending an NPA session interval record for the session.
2500	Specifies the PIU threshold to exceed before sending an NPA session interval record for the session.
0	Specifies that PIU distribution counters be collected for all six ranges when this parameter is modified via STARTPRM or an operator command. (NCP V4.3.1 and 5.2.1 and above)

For Gateway Accounting

Generate the NCP with NPA=YES, SESSACC=YES and GWSESAC=YES on the BUILD macro. Specify the NCP SESSACC parameter as explained above for session accounting. NetSpy uses the following defaults for the GWSESAC parameter:

```
GWSESAC=(YES,,,25000,2500,,0)
```

The default statement above uses the following values:

Value	Description
YES	Network gateway accounting available on this NCP.
ALL	Specifies that accounting statistics be collected on both PLU and SLU sessions.
25000	Specifies the byte threshold to exceed before sending an NPA session interval record for the session. If the network has a lot of activity, this number should be increased.
2500	Specifies the PIU threshold to exceed before sending an NPA session interval record for the session.
0	Specifies that PIU distribution counters be collected for all six ranges when this parameter is modified via STARTPRM or an operator command. (NCP V4.3.1 and 5.2.1 and above)

Starting and Stopping Network Accounting

Starting

You can start the collection of network session accounting or gateway accounting statistics in two ways:

1. Through NCP startup parameters.
2. From the Operator Command Menu.

Stopping

To stop network accounting online, follow these steps:

1. Log on to NetSpy.
2. Select option 3 from the Main Menu for NetSpy Operator Commands.
3. Select option 14 and perform one of the following actions:
   - To stop network session or gateway accounting on one NCP, enter the NCP node name.
   - To stop network session or gateway accounting on all NCPs, enter ALL or an asterisk (*).
   - Enter the type of accounting to be stopped: either NSA for network session accounting or GWA for gateway accounting. The default is NSA.

Starting Accounting Via the NCP Startup Parameters

Specify the following NETACCT statements in your STARTPRM file. You can specify more than one NETACCT statement for different NCPs. All NCPs you specify in the NETACCT statements must have been specified on the DEFINE statements in the STARTPRM file.

For Session Accounting

For network session accounting, use this statement:

```
NETACCT=NSA [ALOG=dest] [NCP=name|ALL] [BTH=n] [PTH=n]
[PIUDIST=n1:n2:n3:n4:n5:n6]
```

For Gateway Accounting

For network gateway accounting (NCP V4.3.1 or 5.2.1 only) use this statement:

```
NETACCT=GWA [ALOG=dest] [NCP=name|ALL] [BTH=n] [PTH=n]
[PIUDIST=n1:n2:n3:n4:n5:n6]
```

Parameters

The NETACCT statements use the following values:

Value	Description
NETACCT=*option*	Turns network accounting collection on: **NSA** For session accounting **GWA** For gateway accounting
ALOG=*dest*	NetSpy will log network accounting statistics to the following destination: **LOG** The Log. This is the *default*. **SMF** SMF. You must specify the SMF number on the SMF statement of the INITPRM member. **DB** The Database.
NCP=*name*	NetSpy will collect network session accounting or gateway accounting statistics for the specified NCP: ***ncpname*** Specifies a particular NCP. The name can be from 1 to 8 characters in length. **Note:** The NCP must have been defined in the DEFINE statement of the NCP startup

Value	Description
	parameters. For session accounting, the NCP must be at V4.3 or V5.2 or above and must have been generated by specifying NPA=YES and SESSACC=YES. For gateway accounting, the NCP must be at V4.3.1 or V5.2.1 or above and must have been generated by specifying NPA=YES, SESSACC=YES, and GWSESAC=YES.
	ALL Specifies all NCPs listed in the DEFINE statements.
BTH=*n*	Sets the byte threshold in the NCP to signify when network session or gateway accounting statistics should be sent over the NPALU to NetSpy ($1\text{-}2^{32}\text{-}1$). This parameter defaults to the number specified on the SESSACC parameter on the BUILD statement.
PTH=*n*	Sets the PIU threshold in the NCP to signify when network session or gateway accounting statistics should be sent over the NPALU to NetSpy ($1\text{-}2^{16}\text{-}1$). This parameter defaults to the number specified on the SESSACC parameter on the BUILD statement. Do not specify the byte and PIU thresholds too low, because this consumes NCP cycles by sending records continuously. The higher the number, the less interval records NetSpy will collect, and the less impact there will be on the NCP.
PIUDIST=*n1:n2:n3:n4:n5:n6*	Defines up to six PIU distribution threshold ranges for monitoring PIU sizes on a session. Each range must be in ascending order. (You do not have to specify all six ranges.) *Default:* PIUDIST=0 (no PIU threshold counters are collected by NetSpy).

Starting Accounting from the Operator Command Menu

To start network session or gateway accounting online, follow these steps:

1. Log on to NetSpy.
2. Select option 3 from the Main Menu for NetSpy Operator Commands.
3. If the NCP is not yet defined, select option 9 from the command menu and enter the NCP node name and specify MON=YES. The NCP need not be collecting performance statistics (SSMF).

4. Select option 13 from the command menu to receive the Start Network Accounting screen.

   Then, follow all of the steps below:

   a. Select option 1 for network session (boundary) accounting statistics or option 2 for gateway accounting statistics.

   b. Select the appropriate option to record the statistics to SMF, the Log, or the Database. If you select SMF, the number must have been specified on the SMF statement in the INITPRM member.

   c. Specify the NCP node name for which you want to collect accounting records. To collect records on all NCPs defined to NetSpy, specify ALL or an asterisk (*).

   d. Specify the byte threshold or PIU threshold if you do not want to use the defaults.

   e. Specify PIU distribution thresholds if you do not want to use the defaults. These thresholds apply to NCP Versions 4.3.1 and 5.2.1 and above.

Start Network Accounting Screen

```
HOST=S028
                  *** START NETWORK ACCOUNTING ***

SELECT NETWORK ACCOUNTING FUNCTION ====>

  1 - NSA (COLLECT NETWORK SESSION ACCOUNTING STATISTICS)
  2 - GWA (COLLECT NETWORK GATEWAY ACCOUNTING STATISTICS)

SELECT THE RECORDING MODE FOR ACCOUNTING STATISTICS ====>

  1 - SMF (WRITE STATISTICS TO SMF)
  2 - LOG (WRITE STATISTICS TO THE NETSPY LOG)
  3 - DB  (WRITE STATISTICS TO THE NETSPY DATABASE)

NCP NODENAME   ====>
BYTE THRESHOLD ====>
PIU THRESHOLD  ====>

PIU DISTRIBUTION THRESHOLDS: (LIST IN ASCENDING ORDER)
  1)       2)        3)       4)        5)        6)

F1=HELP  F3=END  F5=APPLS  F6=TERMS  F9=NCPS  F10=LINES  F12=LOGOFF
OPTIONALLY, ENTER A COMMAND BELOW
---->
```

Network Session Accounting Status Display Screen

```
HOST=S008                        *** 25JAN99.025 TUE 12:46:09 ***

               *** NETWORK SESSION ACCOUNTING STATUS ***

(position cursor in front of NCP name to display more information)

NCP NAME  STATUS  LOGGING   START DATE/TIME  #SESS  BYTE THRES  PIU THRES
N13D5C0   NSA-ON    LOG    25JAN99 12:39:26      0        1000        100
          GWA-N/A
```

Displaying Network Accounting Status

To display the status of network accounting, follow these steps:

1. Log on to NetSpy.
2. Select option 3 from the Main Menu for NetSpy Operator Commands.
3. Select option 12 to display the Network Session Accounting Status screen. You will receive the following information:
   - An indication of whether accounting is turned on
   - The log to which NetSpy is logging the statistics
   - The NCPs for which NetSpy is collecting network session accounting
   - The number of sessions for which NetSpy is currently collecting network session accounting
   - The byte and PIU thresholds in use
   - The time session accounting was turned on.
4. Position your cursor in front of the NCP name for which you want to display additional statistics and enter S. Then, you will see the following information:
   - PIU distribution threshold ranges currently defined for the NCP
   - The NCP NPALU with which NetSpy is in session.

Chapter 12

Using Modeling and Recommendations

NetSpy allows you to propose "what if" scenarios about your system and determine the effects of these scenarios on your network resources. For example, you can determine the effect on your system of increasing the line speed by entering a new line speed and then looking at the change this causes in other network statistics. You do this online with a series of menus and display screens.

About the Modeling and Recommendations Facility

The recommendations screens offer suggestions for improving your network response time based on the statistics collected by NetSpy. For example, NetSpy might suggest that you reduce the outbound message length to lessen the outbound transmission time. You can enter this change on one of the modeling screens and observe the effect on the boundary line network delays.

Modeling and recommendations can also predict changes in the following areas:

- Hardware characteristics (such as line speed)
- Traffic characteristics (such as message size and error rates)
- NCP characteristics (NCP parameters).

The modeling and recommendations screens model boundary lines and not the backbone network. They use the current log(s) to obtain existing data for analysis. See the *NetSpy Administrator Guide* and the chapter "Logging Data" in this manual.

The modeling and recommendations capability of NetSpy gives you a distinct benefit in solving problems and planning for the future. With NetSpy performing modeling for you and recommending changes, you can try various possible solutions to your network problems until you find the best choice. Moreover, you can use modeling to pinpoint causes of problems and thus solve them more quickly. In planning for the future, you can propose various scenarios and then see what the effect would be before you decide on a definite plan.

Important Points to Remember

As you use the modeling and recommendations screens, keep these points in mind:

- NetSpy performs modeling on the boundary lines only. Thus, the response times calculated by NetSpy do not include backbone network traversal time. NetSpy does, however, measure and report these backbone network times as VR times.
- NetSpy requires you to log NCP data for a boundary line *and* all of its clusters before you can model it. In addition, NetSpy uses VTAM session data for this line unless you specify otherwise.
- NetSpy assigns some NCP parameters (for example: MAXOUT, PASSLIM, and MAXDATA) to a line even though they may be specified differently for different PUs on the line. NetSpy takes the values from the first PU on the line.
- NetSpy's modeling and recommendations require log data from NetSpy releases 3.2 or higher; otherwise, certain NCP parameters will be defaulted. In this case, you might receive unsatisfactory modeling results.
- Data is not collected for intervals during which there is no traffic on the line. This prevents idle intervals from influencing the model.
- Modeling expects the log data to be read in the same sequence in which it was written out. This means that the line record must be followed by its PU's records.
- Poll response time as defined by NetSpy includes a combination of turnaround times and the normal poll traversal time, which is the time it takes for a bit to travel from one destination to another. Essentially, NetSpy's definition of poll response time is the time needed for a negative poll (no data received). NetSpy calculates this poll response time accurately when its value (added up for all active clusters on the line) is higher than the value specified in the PAUSE parameter.[1] If the value is lower, NetSpy uses a value of 100 milliseconds.

  An incorrect value for what NetSpy calls poll response time produces incorrect values for network delays in modeling and recommendations. The correct round trip value for this poll response time is the time it takes for a negative poll, which you can determine with a line trace.
- Line speeds must be coded for the line to be modeled. You code line speeds in NCP source through the SPEED or NPM.SPEED parameter. (Note that the NPM.SPEED parameter overrides the SPEED parameter.)

---

[1] For information on the PAUSE parameter, refer to online help. Access the Model Line NCP Parameters screen, place the cursor in the PAUSE field, and press F1.

- A PAUSE value of .8 seconds or greater for SDLC lines, or a NEGPOLP value of .8 seconds or greater for bisynchronous lines, may cause the line not to be modeled.

Choosing the Time Interval

When you enter the start and stop times for modeling and recommendations, you must ensure that you use times representative of the kind of network conditions you want to model. For example, you normally would not want to specify an interval that includes the lunch break, because this period of low activity would be averaged in with other busy times and your data would not be representative of the interval. Choosing a peak period with relatively stable conditions is the best choice.

Using Function Keys

The following table shows the function keys that you can use to move among the modeling and recommendations screens. After you get beyond the Network Analysis Parameters screen, you can use these function keys in place of the menus if desired.

Key	Function	Explanation
F1/F13	HELP	Displays help screens.
F3/F15	MENU	Takes you back to the previous menu. **Note:** F3/F15 **will not** take you out of modeling and recommendations. You must select option 8 from the Analysis Menu instead.
F4/F16	MODELH	Displays the Model Line Hardware screen.
F5/F17	MODELN	Displays the Model Line NCP Parameters screen.
F6/F18	MODELT	Displays the Model Line Traffic screen.
F7/F19	Page backward	Scrolls up one screen.
F8/F20	Page forward	Scrolls down one screen.
F9/F21	DSPSTAT	Toggles between line statistic displays.
F10/F22	PREVIOUS	Goes back to the previous line in the selection list.
F11/F23	NEXT	Advances to the next line in the selection list.
F12/F24	RECOMMND	Displays the recommendations screens.

Accessing the Modeling and Recommendations Screens

Network Analysis Parameters Menu

You access the Modeling and Recommendations screens through the Network Analysis Parameters menu. This menu allows you to specify a boundary line name and optional parameters for modeling.

```
HOST=NQ28
                    *** NETWORK ANALYSIS PARAMETERS ***

 SPECIFY BOUNDARY LINE(S) TO BE ANALYZED:

   LINE NAME=          (GENERIC NAME, RLIST FOR RESOURCE LIST, OR '*' FOR ALL)

 ENTER ONE THRESHOLD VALUE TO LIMIT NO. OF LINES TO BE ANALYZED:

             NET RSP. TIME>               UTILIZATION>

 INDICATE WHETHER VTAM SESSION DATA IS TO BE USED FOR ANALYSIS:   (Y/N)

 SELECT TIME SPAN FOR LOG DATA TO BE ANALYZED:

   STARTT= 00:00:00    STOPT= 24:00:00   STARTD= 10APR2001  STOPD= 17APR2001

ALTERNATE LOG NAME =


F1=HELP   F3=END   F5=APPLS   F6=TERMS   F9=NCPS   F10=LINES   F12=LOGOFF
OPTIONALLY, ENTER A COMMAND BELOW
---->
```

How to Access

Access in two ways:

- Choose option 9 from the NetSpy Main Menu.
- Type ANALYZE from the command line of any screen.

How to Use

Specify the generic name of the line you want to analyze, or enter asterisk (*) for all boundary lines. If you do not want to use VTAM data in the analysis, indicate N in this field. Press Enter, or specify optional parameters first to limit the display and then press Enter.

Parameters for Modeling and Recommendations

The following table explains the fields on the menu.

Parameter	Description
LINE NAME	Name of the line that you want to analyze. You can specify any of the following values for line name: **generic name** Selects line names matching the generic name specified. Generic name is defined in the chapter entitled "Using the Displays." **RLIST** Selects resources defined in the line resource list. If you specify RLIST when no resource list has been defined, you will receive a warning message. **asterisk (*)** Selects all known boundary lines with NCP data.
NET RSP TIME	Sets the network response time threshold. Only lines with a *calculated* network response time exceeding this threshold will be analyzed.
UTILIZATION	Sets the threshold for line utilization by outbound data. NetSpy analyzes only lines on which the *outbound* data (overhead not included) utilization exceeds the threshold.
VTAM SESSION DATA	Indicates whether you want VTAM data to be used for analysis in addition to NCP data. You will probably want to use VTAM data except when NCP data better represents the line traffic characteristics. For example, the host that is collecting the VTAM data sees only printer traffic, while all the interactive traffic goes elsewhere. The default is YES.
STARTT STOPT	Indicates the start and stop times for modeling to occur, specified as *hh:mm:ss* or *hh:mm*. The defaults are STARTT=00:00:00 and STOPT=24:00:00.
STARTD STOPD	Indicates the start and stop dates for modeling to occur, specified as *yyddd, ddmmmyy,* or TODAY (equivalent to entering the current date). To specify the year 2000, type 00. The start and stop dates default to the dates of the first and last entries in the log files.

Parameter	Description
ALTERNATE LOG NAME	Name of the file that you want NetSpy to search for report statistics. This file serves as an alternative option to the log. NetSpy does not write data to it; you store data in it that you have transferred from the active log. The alternative log file acts as a *read only* file. If NetSpy cannot find the alternate log file, it issues error messages when it tries to execute the report. **Note:** You can specify either an alternate log file name or a HOSTID or both. On OS/390, you do not have to enclose the name in quotes unless it contains special characters. You can use GDG data sets as the alternate log file in several ways: ■ Enter the GDG data set name with the G*nnnn*V*vvvv* generation and version number extension. ■ Enter the GDG data set name with a relative generation number such as 'datasetname'(0) or 'datasetname'(1). The data set name must be enclosed in quotes because it contains parentheses. ■ Enter the GDG data set name without any generation. In this case, all the generations will be concatenated and used as input to the requested report.

Selecting the Boundary Line

Network Resource Selection List

The resulting display is a Network Resource Selection List. This screen shows current statistics for each boundary line and allows you to select a specific line for modeling. Boundary line names match the name entered on the Network Analysis Parameters screen.

Press F1 for an explanation of column headings on this display.

```
HOST=S028  **** NETWORK RESOURCE SELECTION LIST **** 25JAN99.025 TUE 11:01:58
 PLEASE SELECT ONE LINE WITH "S" AND PRESS ENTER
     LINE     COLL LINE                    NETWORK DELAYS
     NAME     ITVL  UTL   POLL  INBOUND     FEP  WAIT(O) OUTBOUND   TOTAL
  XL21029     9.4H    8    0.3      0.1     0.2      0.1      1.0     1.6
  XL21030     6.0H    3    0.1      0.1     0.2      0.1      0.7     1.1
  XL21032    21.1H    2    0.1      0.3     0.2      0.1      0.7     1.4
  XL21033     1.0H    0    0.1      0.1     0.2      0.0      0.1     0.4
  XL21034     1.0H    0    0.1      0.1     0.2      0.0      0.2     0.5
  XL21035     7.3H    6    0.1      0.1     0.2      0.1      1.4     1.9
  XL21037     1.0H    0    0.3      0.3     0.2      0.2      0.3     1.2
  XL21038     6.5H    6    0.2      0.1     0.2      0.1      0.7     1.3
  XL21043    60.0M    0    0.1      0.1     0.2      0.0      0.1     0.5
  XL21044    14.5H    0    0.1      0.1     0.2      0.0      0.1     0.5
  XL21051     9.0H    0    0.1      0.1     0.2      0.0      0.1     0.4
  XL21068     1.8H    1    0.1      0.1     0.2      0.0      0.3     0.6
  XL21072     1.2H    0    0.1      0.3     0.2      0.1      0.1     0.7
  XL21073    60.0M    0    0.1      0.1     0.2      0.1      0.1     0.5
  XL21074     1.7H   11    0.2      0.0     0.2      0.2      2.2     2.8
  XL21080    13.0H    0    0.1      0.0     0.2      0.0      0.2     0.5
  XL21084    15.3H    0    0.1      0.0     0.2      0.0      0.3     0.5
F1=HELP  F3=MENU  F4=MODELH  F5=MODELN  F6=MODELT  F9=DSPSTAT  F12=RECOMMND
OPTIONALLY, ENTER A COMMAND BELOW
---->
```

How to Access

Access by specifying the required information on the Network Analysis Parameters screen and pressing Enter.

How to Use

Select the line you want to use for modeling by entering the letter S to the left of the name and pressing Enter.

Choosing Options from the Network Analysis Menu

Network Analysis Menu

When you select a line from the Network Resource Selection List, the Network Analysis menu is displayed. This menu allows you to select the characteristics you want to model, display line statistics and a line selection list, access NetSpy recommendations, or exit modeling and recommendations.

```
HOST=S028
                    *** NETSPY NETWORK ANALYSIS MENU ***

 SELECT A MENU NUMBER
 ---->
                                  LINE NAME=  XL21029

     1 - MODEL LINE HARDWARE CHARACTERISTICS
     2 - MODEL LINE NCP PARAMETERS
     3 - MODEL LINE TRAFFIC CHARACTERISTICS
     4 - DISPLAY LINE STATISTICS ( CURRENT )
     5 - DISPLAY LINE STATISTICS ( MODEL )
     6 - DISPLAY LINE SELECTION LIST
     7 - RECOMMENDATIONS
     8 - EXIT MODELING AND RECOMMENDATIONS


F1=HELP  F3=MENU  F4=MODELH  F5=MODELN  F6=MODELT  F9=DSPSTAT  F12=RECOMMND
OPTIONALLY, ENTER A COMMAND BELOW
---->
```

How to Access

Access in two ways:

- By choosing a line name from the Network Resource Selection List
- By pressing F3 from any of the modeling and recommendations screens except the Network Analysis Parameters screen.

How to Use

Choose the option corresponding to the function you want to perform and press Enter.

Network Analysis Menu Options

The following table describes the options on the menu.

Option	Description
1	Model line hardware characteristics, such as line speed and number of terminals.
2	Model line NCP parameters, such as MAXDATA and PASSLIM.
3	Model line traffic characteristics, such as INBOUND MESSAGE RATE and ERROR RATE.
4	Look at complete line statistics for your actual configuration. You can use F9 to switch between this screen and the screen showing the effects of modeling (option 5).
5	Look at complete line statistics for your proposed configuration. You can use F9 to switch between this screen and the screen showing your actual configuration (option 4).
6	Display a list of boundary lines. The line name(s) match the line name you entered on the Network Analysis Parameters screen.
7	Review the NetSpy Tuning Recommendations screens, which give you suggestions for improving response time. NetSpy bases these suggestions on *actual* data, not proposed new values.
8	Exit modeling and recommendations and go to another NetSpy facility. Your modeling parameters will *not* be saved.

Modeling Line Hardware Characteristics

Model Line Hardware Characteristics Screen

The Model Line Hardware Characteristics screen allows you to enter proposed changes to your hardware configuration and see the effect on the network. The screen shows the following items:

- Line name
- Actual configuration
- Proposed new value
- Network delays.

Press F1 for an explanation of column headings on this display.

```
HOST=S028
                 *** MODEL LINE HARDWARE CHARACTERISTICS ***

 ENTER PROPOSED CHANGES TO CONFIGURATION AND PRESS ENTER TO DISPLAY

                               LINE NAME= XL11002

                ACTUAL CONFIGURATION      PROPOSED NEW VALUE
             LINE SPEED   =    9600 BAUD        =    9600
             POLL-RSP TIME=     548 MSEC        =     548
             NO. CLUSTERS =       1             =       1
             NO. TERMINALS=      10             =      10
             PROTOCOL     =    SDLC (SDLC/BSC)  =    SDLC
             DUPLEX       =    HALF (FULL/HALF) =    HALF

                               NETWORK DELAYS                    MODEL
   POLL  INBOUND      FEP  WAIT(O) OUTBOUND    TOTAL
    0.3      0.3      0.2      0.3      0.3      1.3             HARDWARE
    0.3      0.3      0.2      0.3      0.3      1.3             COMBINED
    0.3      0.3      0.2      0.3      0.3      1.3             ACTUAL

F1=HELP  F3=MENU  F4=MODELH  F5=MODELN  F6=MODELT  F9=DSPSTAT  F12=RECOMMND
OPTIONALLY, ENTER A COMMAND BELOW
---->
```

How to Access

Access in two ways:

- Choose option 1 from the Network Analysis Menu.
- Press F4 from any modeling and recommendations screen except the Network Analysis Parameters screen.

How to Use

Enter your proposed values in the PROPOSED NEW VALUE column and press Enter. Note the effect of these changes by viewing the data under the NETWORK DELAYS heading.

Modeling Line Traffic Characteristics

Model Line Traffic Characteristics Screen

The Model Line Traffic Characteristics screen allows you to enter the proposed changes to your traffic configuration and see the effect on the network. It shows you the following items:

- Line name
- Actual configuration
- Proposed new value
- Network delays.

Press F1 for an explanation of column headings on this display.

```
HOST=S028
                *** MODEL LINE TRAFFIC CHARACTERISTICS ***

 ENTER PROPOSED CHANGES TO CONFIGURATION AND PRESS ENTER TO DISPLAY

                               LINE NAME= XL11002

                ACTUAL CONFIGURATION      PROPOSED NEW VALUE
             IN MSG RATE  =     .05 (MSGS/SEC)  =     .05
             IN MSG LENGTH=      23             =      23
             OUT MSG LEN. =      33             =      33
             ERROR RATE   =  151.25 (ERRS/MBYTE)=  151.25
             NO.OUTS/TRANS=     0.7             =     0.7

                               NETWORK DELAYS                    MODEL
   POLL  INBOUND      FEP  WAIT(O) OUTBOUND    TOTAL
    0.3      0.3      0.2      0.3      0.3      1.3             TRAFFIC
    0.3      0.3      0.2      0.3      0.3      1.3             COMBINED
    0.3      0.3      0.2      0.3      0.3      1.3             ACTUAL

F1=HELP  F3=MENU  F4=MODELH  F5=MODELN  F6=MODELT  F9=DSPSTAT  F12=RECOMMND
OPTIONALLY, ENTER A COMMAND BELOW
---->
```

How to Access

Access in two ways:

- Choose option 3 from the Network Analysis Menu.
- Press F6 from any modeling and recommendations screen except the Network Analysis Parameters screen.

How to Use

Enter your proposed changes in the PROPOSED NEW VALUE column and press Enter. Note the effect of these changes on the network by viewing the data under the NETWORK DELAYS heading.

Modeling Line NCP Parameters

Model Line NCP Parameters Screen

The Model Line NCP Parameters screen allows you to enter the proposed changes to your NCP parameters and see the effect on the network. It shows you the following items:

- Line name
- Actual configuration
- Proposed new value
- Network delays.

Press F1 for an explanation of column headings on this display.

```
HOST=S028
                    *** MODEL LINE NCP PARAMETERS ***

 ENTER PROPOSED CHANGES TO CONFIGURATION AND PRESS ENTER TO DISPLAY

                              LINE NAME= XL11002

               ACTUAL CONFIGURATION      PROPOSED NEW VALUE
            DELAY        =     0.2 (SECS)      =     0.2
            PAUSE        =     0.2             =     0.2
            MAXDATA      =     265             =     265
            MAXOUT       =       7             =       7
            PASSLIM      =       7             =       7

                              NETWORK DELAYS                    MODEL
   POLL  INBOUND      FEP  WAIT(O) OUTBOUND    TOTAL
    0.3      0.3      0.2      0.3      0.3      1.3            NCP
    0.3      0.3      0.2      0.3      0.3      1.3            COMBINED
    0.3      0.3      0.2      0.3      0.3      1.3            ACTUAL

F1=HELP  F3=MENU  F4=MODELH  F5=MODELN  F6=MODELT  F9=DSPSTAT  F12=RECOMMND
OPTIONALLY, ENTER A COMMAND BELOW
---->
```

How to Access

Access in one of two ways:

- Choose option 2 from the Network Analysis Menu.
- Press F5 from any modeling and recommendations screen except the Network Analysis Parameters screen.

How to Use

Enter your proposed changes in the PROPOSED NEW VALUE column and press Enter. Note the effect of these changes on the network by viewing the data under the NETWORK DELAYS heading.

Displaying Complete Line Statistics

Line Statistics Display

The Line Statistics display shows you complete line statistics for hardware, traffic, NCP parameters, and network delays. You can view statistics for your actual configuration or your proposed configuration. The notation after the heading CONFIGURATION tells you the kind of statistics you are viewing.

Press F1 for an explanation of column headings on this display.

```
HOST=S028
                    *** LINE STATISTICS DISPLAY ***

LINE NAME=  XL11002     COLLECTION INTERVAL=     4.9H  CONFIGURATION: ACTUAL

HARDWARE:
LINE SPEED=   9600            POLL-RSP  =  548 (MS)     NO. PUS=   1
PROTOCOL  =   SDLC            DUPLEX    = HALF          NO. LUS=  10

TRAFFIC:
OUT UTILIZATION=      0       OUT MSG LEN=     33       NO. OUT/TRAN=   0.7
IN  UTILIZATION=      0       IN  MSG LEN=     23       IN MSG RATE =   .05
ERRORS/MBYTE   =  21151

NCP PARAMETERS:
DELAY  =  0.2                 PAUSE =  0.2              REPLYTO =
MAXDATA=  265                 MAXOUT=    7              PASSLIM =    7

NETWORK DELAYS:   POLL  INBOUND      FEP  WAIT(O) OUTBOUND    TOTAL
                   0.3      0.3      0.2      0.3      0.3      1.3

F1=HELP  F3=MENU  F4=MODELH  F5=MODELN  F6=MODELT  F9=DSPSTAT  F12=RECOMMND
OPTIONALLY, ENTER A COMMAND BELOW
---->
```

How to Access

Access in two ways:

- Choose option 4 or 5 from the Network Analysis Menu.
- Press F9 from any modeling and recommendations screen except the Network Analysis Parameters screen.

How to Use

Use this screen to view all line statistics and to compare actual configuration data with proposed configuration data. You can use F9 to switch between the two kinds of statistics.

Viewing Tuning Recommendations

Network Tuning Recommendations Screens

The recommendations screens give you ideas for changing hardware, traffic, or NCP parameter characteristics. Each recommendation tells you what to change and explains the effect this change will have on your network. The recommendation is based on actual data NetSpy has collected.

An example of a network tuning recommendation is shown below.

```
HOST=S008
                    *** NETWORK TUNING RECOMMENDATIONS ***

                               LINE NAME= XL21173

- REDUCE THE NO. OUTPUTS PER TRANSACTION BY:
   . RECODING THE APPLICATION
   . ELIMINATING CHAINED OUTPUT
  RESULT: REDUCTION OF THE OUTBOUND TRANSMISSION DELAYS
          CAUSED BY LARGE PROPAGATION/TURNAROUND TIMES

- REDUCE THE LINE PROPAGATION DELAY/TURNAROUND TIME BY:
   . RE-ROUTING THE LINE FOR MINIMUM DISTANCE
   . IMPROVING MODEM TURNAROUND TIME
  RESULT: REDUCTION OF BID-TO-POLL DELAYS AND OUTBOUND
          TRANSMISSION TIMES, ESPECIALLY FOR LONG MESSAGES


F1=HELP  F3=MENU  F4=MODELH  F5=MODELN  F6=MODELT  F9=DSPSTAT  F12=RECOMMND
OPTIONALLY, ENTER A COMMAND BELOW
---->
```

How to Access

Access in two ways:

- Choose option 7 from the Network Analysis Menu.
- Press F12 from any of the modeling and recommendations screens except the Network Analysis Parameters screen.

How to Use

View the recommendations and decide if you want to implement them. To see the effect of this change on the actual data, access one of the modeling screens and enter the proposed new value. Because some recommendations require more than one screen, you might see this notation in the lower right corner of your screen:

```
...MORE
```

Chapter

13 Creating Batch Reports

Using NetSpy's batch reporting programs, you can produce printouts that contain the same kinds of information that you find on the online displays.

Using Batch Reports

The batch reports enable you to accomplish various goals, such as:

- Analyzing network performance
- Planning for future capacity
- Troubleshooting network problems
- Tracking service level agreements
- Preparing reports for management

Input Files

The data that NetSpy uses to create the batch reports is taken from the logs to which the NetSpy data has been logged. See the chapter "Logging Data" for more information

To get a batch report containing data from the Database, you must first convert the Database to standard SMF format (see the NSYDBCV member in the NETSPY.CNTL data set).

If you are using more than one file as input to the reporting facility, sort the combined files prior to specifying the batch control statements.

NetSpy writes one SMF format record that includes several different record subtypes.[1] The records contain information for each network resource that NetSpy monitors.

In addition to the reporting programs provided with NetSpy, you also can create your own reports. See the chapter "Log Record Layouts" in the *NetSpy Administrator Guide* for a description of the record layout.

Types of Reports You Can Request

NetSpy produces three kinds of batch reports:

1. ***Exception report.*** This report allows you to print statistics for any network resource exceeding a threshold you specify. You request exception reports with the PRINT statement.
2. ***Summary report.*** This report gives you an overview of the performance of any network resource you choose in a list format. You request summary reports with the SUMMARY statement.
3. ***Graphic report.*** This report gives you an overview of the performance of any network resource you choose in a graphic format. You request graphic reports with the GRAPH statement.

[1] Records containing NCP data (subtype N) can be converted to SMF type 38 format records using a utility program provided with NetSpy as described in the appendix entitled "Converting NCP Records to Type 38 Format" in the *NetSpy Administrator Guide*.

Report Differences

Time Stamps: Time intervals are displayed differently for exception reports than for summary and graphic reports. Exception reports display data based on the time the records were written, or the end of an interval. The data shown is for activity in the *previous* interval, based on the interval parameter in the NetSpy INITPRM member.

Summary and graphic reports display time stamps for the *beginning* of the interval that a record was written. The data shown reflects traffic for the interval time following the time stamp.

For example:

> An exception report shows user response time for a terminal (LU) at 8:30 (the end of the interval).
>
> A summary or graphic report will show the same user response time for the same LU at 8:15 (the beginning of the interval).

Utilization Statistics: Utilization statistics are calculated differently for exception reports than they are for summary or graphic reports. Exception reports gather utilization data based on the duplex of the line. If the line is half-duplex, calculations are performed on both the *receive* and the *send* byte counts to display one utilization statistic. If the line is full-duplex, separate calculations are performed on the *receive* and *send* byte counts to arrive at *primary* and *secondary* utilization, respectively.

With summary and graphic reports, separate calculations are always performed on the *receive* and *send* byte counts regardless of the duplex of the line. This will cause a *secondary* utilization to be displayed for half-duplex lines.

Information That Determines Report Content

The content of the batch reports that NetSpy produces is determined by these factors:

- The statistics that have been collected in SMF, the Log, or Datacom
- The way you define your network configuration to the reporting programs
- The kind of report you request
- The parameters you enter in the PRINT, SUMMARY, or GRAPH control statements

Using Batch Report Control Statements

NetSpy includes the following control statements that work together to provide a complete reporting system. By using various combinations of these control statements and parameters, you can produce over 100 types of reports.

Statement	Description
SMF# (or SMFNO)	Specifies the SMF record number your installation uses when collecting records.
DEFINE	Defines the network configuration to the reporting system. This allows NetSpy to group terminals together based on the line or cluster that owns them. This statement is not needed if NCPARSE=NO (the default). **Note:** The NCP definition (your NCP generation source) referred to here must be the same one that was in effect when the records were collected.
ECHO	Controls echo printing of the control statements on the reports.
NCPARSE	Indicates whether terminal data records that do not have line or cluster names will be included in the line or cluster reports. Records that have neither line nor cluster names will be excluded from these reports. When NCPARSE=NO (the default), NetSpy generates line and cluster reports using the line and cluster information in the type T and U records, instead of searching the NCP data base created by the DEFINE statement. When NCPARSE=YES and line and cluster reports are selected, NetSpy searches the defined NCP data bases for each terminal record to get the correct line and cluster names. You must specify NCPARSE=YES for type S records.
PAGESIZE	Specifies the number of lines per page for the requested reports. It is not valid for the GRAPH statement and will be ignored if used in requesting a graphic report.
PRINT	Requests an exception report.
SUMMARY	Requests a summary report.
GRAPH	Requests a graphic report.

Grouping Terminals

NetSpy allows you to logically group a set of related or unrelated terminals through the CLUSTER, LINE, and LU resource types explained below.

Type	Description
CLUSTER	When the CLUSTER parameter is used to report on terminals, NetSpy selects all terminals associated with any cluster that matches the generic name qualifier. If NCPARSE=YES, the DEFINE control statement must be included. You can use the NCPARSE=NO statement (see The NCPARSE Control Statement) to limit the selection of records to those that contain valid cluster names.
LINE	When the LINE parameter is used to report on terminals, NetSpy selects all terminals associated with all lines that match the generic name qualifier. If NCPARSE=YES, the DEFINE control statement must be included. You can use NCPARSE=NO (the default) to limit the selection of records to those that contain valid line names. You do not need to use the DEFINE statement when NCPARSE=NO.
LU	Selects all logical units that match the generic name you specify.

Resource Lists Specifications

You also can group resources together through ***resource list specifications***. Resource list specifications create a resource list containing specific and generic resources to be included in or excluded from batch reports. Resource list specifications can also contain the names of one or more files that in turn contain specific resource names.

To create a resource list specification, use one of the formats below. Note that the second and third formats are functionally identical. You can specify up to 1000 names for each resource type.

resourcetype = *name*
resourcetype = (*name1, name2, name3, etc.*)
resourcetype = LIST(*name1, name2, name3, etc.*)
resourcetype = FILE(*file1, file2, file3, etc.*)

File names include any member of the data set identified through the //RSCPARM DD statement in the batch report JCL. This member must be fixed and blocked, with a logical record length of 80 bytes.

Within these files, specify resource names within columns 1 and 71, with at least one space or comma between them.

You can also specify INCLUDE to include the listed resources in the report, or EXCLUDE to exclude them. The default is INCLUDE.

For example, to include the applications APPL1 and APPL2, you could specify the APPL resource type in any of these ways:

```
APPL=(APPL1,APPL2)
APPL=(APPL1,APPL2) INCLUDE
APPL=LIST(APPL1,APPL2)
APPL=LIST(APPL1,APPL2) INCLUDE
```

When there are too many resource names to fit on one line, you can continue the specification on a second line with another statement:

```
APPL=(TS008,TS028,TS032,CICS1,CICS2,CICS3,SCON08,SCON28,SCON32)
APPL=(TPXPROD,NETSPY08,NETSPY28)
```

The above statement can also be represented using generic names:

```
APPL=(TS0?8,TS032,CICS*,SCON?8,SCON32,TPXPROD,NETSPY?8)
```

Control Statement Syntax and Order

To request batch reports, enter the control statements in this order:

1. ***SMF# (or SMFNO) control statement.*** Specifies the SMF record number used. This must be the first statement, except when the ECHO or NCPARSE statement is used.
2. ***DEFINE statements.*** Allows you to logically group terminals together based on their respective lines or clusters as defined in the NCP generation source. You can use NCPARSE=NO (the default) to limit the selection of records to those that contain valid line or cluster names. You do not need to use the DEFINE statement when NCPARSE=NO.
3. ***Multiple report requests.*** Can include any combination of PRINT, SUMMARY, and GRAPH control statements.

On all control statements, you can include comments on the same line. The comment delimiter is a semicolon (;), which can appear in any column. A semicolon or an asterisk (*) in column one makes the entire line a comment. The semicolon indicates the end of the parameter, so the remainder of the line is interpreted as a comment.

PRINT, SUMMARY, and GRAPH control statements can be continued over several lines by entering a non-blank character in column 72. Individual parameters may not be split across two lines.

For an explanation of generic names, see the chapter entitled "Technical Overview."

The SMF# (or SMFNO) Control Statement

SMF# (or SMFNO) must be the first of your control statements (except when ECHO is used). It specifies the SMF record number used to collect records at your installation. Enter it as either SMF#=*n* or SMFNO=*n*.

The DEFINE Control Statement

The DEFINE statement tells NetSpy the configuration of an NCP and local nodes. It is used to logically group terminals when LINE and CLUSTER are requested. Enter it as follows:

```
DEFINE {NCP=ncpname|NODE=nodename} [MAXNCPSZ=n]
```

You can enter any number of DEFINE statements.

Parameter	Description
NCP=*ncpname* NODE=*nodename*	Definition of the NCP or non-NCP major node indicated by *ncpname* or *nodename*, where *ncpname/nodename* is a member of your VTAM node source library identified by the //NCPSRC DD statement. **Note:** Non-NCP major nodes include local clusters, local SNA nodes, and local switched nodes.
MAXNCPSZ=*n*	The expected number of network resources in this NCP. It defaults to 1000. This parameter also applies to the other major node types.

The ECHO Control Statement

The ECHO statement tells NetSpy whether it should “echo print” the control statements. Enter it as follows:

```
ECHO=YES|NO
```

You can insert the ECHO statement anywhere in your control statements, even before the SMF# statement. It can be used more than once to selectively “echo print” control statements.

Value	Description
YES	Echo prints the control statements. This is the default value.
NO	Does not echo print the control statements.

The NCPARSE Control Statement

The NCPARSE control statement is valid only for line or cluster reports of terminal type data and tells NetSpy whether to include records that do not contain a line or cluster name. Line and cluster names are omitted from records that are written for a virtual terminal before a session manager returns the real terminal name. Enter it as follows:

```
NCPARSE=YES|NO
```

You can place the NCPARSE statement anywhere in your control statements, and you can repeat it in the same job to turn NCPARSE off or on for different reports.

Value	Description
YES	Searches the NCP data base created in the DEFINE statement for the line and cluster of the terminal, and this terminal will be included in the report.
NO	Uses only those records that have line and cluster name information in its record; the NCP data base created in the DEFINE statement will not be used. This is the default.

Notes:

1. Setting NCPARSE=NO reduces CPU time and storage.
2. If you are reporting on type S records, you must specify NCPARSE=YES.

The PAGESIZE Control Statement

The PAGESIZE statement tells NetSpy the page size in lines for all reports. The default value is 60, NetSpy will print 60 lines per page for all reports you request. Enter this statement as follows:

```
PAGESIZE=n
```

PRINT, SUMMARY, and GRAPH Control Statements

The PRINT, SUMMARY, and GRAPH control statements request specific types of reports. Each statement is explained in the following pages, with examples.

Rules

Follow these rules when entering PRINT, SUMMARY, and GRAPH control statements:

- You must choose one network resource type for each control statement.
- You can specify any of the following as a resource name:
  - Specific name
  - Generic name
  - Resource list specification. (See Resource Lists Specifications.)
- You can enter only one of the statistical (or threshold for the PRINT statement) parameters in braces for each control statement. If you do not enter one, all records for the specified resource are printed.
- You can enter one or more of the parameters in brackets for each control statement.
- Specify all units indicated by *n* as integers representing either tenths of seconds or a whole number, depending upon the context in which the integer is used.

The PRINT Control Statement

The PRINT control statement requests an exception report for any network resource that exceeded a threshold you specify. These optional thresholds can be set for response times, transaction counts, error rates, traffic volumes, and other values for any application, terminal, or NCP resource. The times shown on PRINT batch reports are end-of-interval times.

Statement Parameters

Explanations of all the parameters in the PRINT control statements begin at PRINT Statement Parameter Descriptions.

Requesting VTAM Statistics

The PRINT control statement requesting VTAM statistics is as follows:

```
PRINT  {APPL=name}     {AHRSP>n}   [EXCLU62|ONLYLU62]
                       {ANRSP>n}
                       {AURSP>n}
                       {WHRSP>n}
                       {WNRSP>n}
                       {#SESS>n}
                       {#MSGS>n}
                       {#BYTES>n}
                       {#TRANS>n}

       {LU=name}       {AHRSP>n}   [FORAPPL=name]
       {LINE=name}     {ANRSP>n}   [APPLDSGN]
       {CLUSTER=name}  {AURSP>n}   [LOCAL|REMOTE]
                       {WHRSP>n}   [EXCLU62|ONLYLU62]
                       {WNRSP>n}
                       {#MSGS>n}
                       {#BYTES>n}
                       {#TRANS>n}

       {VR=number}     {ANRSP>n}   [SA=number]
                       {#TMSGS>n}
                       {#OMSGS>n}
                       {#IMSGS>n}

       [STARTT=hh:mm:ss] [STOPT=hh:mm:ss] [STARTD=ddmmmyyyy]
       [STOPD=ddmmmyyyy] [SMFID=xxxx] [NOECHO] [TITLE='text']
       [EXDAYS=dates] [PREVDAYS=n]
```

The optional parameters at the bottom, beginning with STARTT, can be used with any resource.

The example below shows a PRINT control statement that requests a report for all applications known to NetSpy with an average host response time greater than 3 seconds (VTAM statistics):

```
                                          Column 72
PRINT APPL=* AHRSP>30                             X
      STARTD=12MAR2001 STOPD=12MAR2001            X
      STARTT=09:00     STOPT=13:00                X
      TITLE='COMPUTER ASSOCIATES'
```

You can specify any of the following as a resource name, FORAPPL name, or SA number:

- Specific name
- Generic name
- Resource list specification. (See Resource Lists Specifications.)

Requesting VTAM Buffer Statistics

The PRINT control statement requesting VTAM buffer statistics is as follows:

```
PRINT BUFFERS=buffer id|*
      [STARTT=hh:mm:ss] [STOPT=hh:mm:ss] [STARTD=ddmmmyyyy]
      [STOPD=ddmmmyyyy] [SMFID=xxxx] [NOECHO] [TITLE='text']
      [EXDAYS=dates] [PREVDAYS=n]
```

The following values can be specified for *buffer ID*:

IOBUF or IO00
BSBUF or BS00
LPBUF or LP00
XDBUF or XD00
LFBUF or LF00
CRPLBUF or CR00
SFBUF or SF00
SPBUF or SP00
WPBUF or WP00
APBUF or AP00

Note: You can use the first two characters of the ID as a shortcut.

The example below shows a PRINT control statement that requests a report for all VTAM buffers:

```
                                        Column 72
PRINT BUFFERS=*                                 X
      STARTD=10MAR2001 STOPD=10MAR2001          X
      STARTT=09:00     STOPT=13:00              X
      TITLE='COMPUTER ASSOCIATES'
```

Requesting NCP Statistics

The PRINT control statement requesting NCP statistics is as follows:

```
PRINT  {NCP=name}       {CCU>n}
                        {CHQ>n}
                        {UBUF>n}

       {LINE=name}      {ERRS>n}
                        {MSGSM>n}
                        {OQLEN>n}
                        {UTL>n}

       {CLUSTER=name}   {ERRS>n}
                        {MSGSM>n}
                        {OQLEN>n}

       {TERMINAL=name}  {MSGSM>n}
                        {OQLEN>n}
                        {ACCT [SESS=START] [SESS=END]}
                        {NSA  [SESS=START] [SESS=END]}
                        {GWA  [SESS=START] [SESS=END]}

       {CA=name}        {MSGSM>n}
```

```
                        {OQLEN>n}

        {NCPCB=name}    {CURPCT>n}
                        {MAXPCT>n}
                        {MAXDPCT>n}

        {TP=name}       {HIGHPCT>n}
                        {LOWPCT>n}
                        {MEDPCT>n}

        [STARTT=hh:mm:ss] [STOPT=hh:mm:ss] [STARTD=ddmmmyyyy]
        [STOPD=ddmmmyyyy] [SMFID=xxxx] [NOECHO] [TITLE='text']
        [EXDAYS=dates] [PREVDAYS=n]
```

The example below shows a PRINT control statement that requests a report for all lines with a messages-per-minute rate greater than 100 (NCP statistics):

```
                                          Column 72
PRINT LINE=* MSGSM>100                            X
      STARTD=10MAR2001 STOPD=10MAR2001            X
      STARTT=09:00   STOPT=13:00                  X
      TITLE='COMPUTER ASSOCIATES'
```

Requesting NTRI Statistics

The PRINT control statement requesting NTRI statistics is as follows:

```
PRINT NTRI=name {UTL>n}
                {IFRMM>n}
                {OQLEN>n}
                {CONGSCNT>n}

      [STARTT=hh:mm:ss] [STOPT=hh:mm:ss] [STARTD=ddmmmyyyy]
      [STOPD=ddmmmyyyy] [SMFID=xxxx] [NOECHO] [TITLE='text']
      [EXDAYS=dates] [PREVDAYS=n]
```

The example below shows a PRINT control statement that requests a report for all TIC utilization percentages greater than 11.5% for NTRI resources.

```
                                          Column 72
PRINT NTRI=* UTL>115                              X
      STARTD=10MAR2001 STOPD=10MAR2001            X
      STARTT=09:00   STOPT=13:00                  X
      TITLE='COMPUTER ASSOCIATES'
```

Requesting X.25 Statistics

The PRINT control statement requesting X.25 statistics is as follows:

```
PRINT  {X25LINE=name} {UTL>n}
                      {IFRMM>n}
                      {OQLEN>n}

       {X25PU=name}   {PACKM>n}

       {X25VC=name}   {PACKM>n}

       {X25STAT=name}

       [STARTT=hh:mm:ss] [STOPT=hh:mm:ss] [STARTD=ddmmmyyyy]
       [STOPD=ddmmmyyyy]  [SMFID=xxxx] [NOECHO] [TITLE='text']
       [EXDAYS=dates] [PREVDAYS=n]
```

The example below shows a PRINT control statement that requests a report for all X.25 MCH lines with greater than 50 percent utilization:

```
                                        Column 72
PRINT X25LINE=* UTL>50                          X
      STARTD=10MAR2001 STOPD=10MAR2001          X
      STARTT=09:00   STOPT=13:00                X
      TITLE='COMPUTER ASSOCIATES'
```

Requesting Ethernet Statistics

The PRINT control statement requesting Ethernet statistics is as follows:

```
PRINT  {ETH=name} {IFRMM>n}
                  {OQLEN>n}
                  {CONGSCNT>n}
                  {COLL>n}

       [STARTT=hh:mm:ss] [STOPT=hh:mm:ss] [STARTD=ddmmmyyyy]
       [STOPD=ddmmmyyyy] [SMFID=xxxx] [NOECHO] [TITLE='text']
       [EXDAYS=dates] [PREVDAYS=n]
```

The example below shows a PRINT control statement that requests a report for all Ethernet resources that have a collision count (sum of single and multiple) greater than 10:

```
                                        Column 72
PRINT ETH=* COLL>10                             X
      STARTD=05MAR2001 STOPD=05MAR2001          X
      STARTT=09:00   STOPT=13:00                X
      TITLE='COMPUTER ASSOCIATES'
```

Requesting Frame Relay Statistics

The PRINT control statement requesting Frame Relay statistics is as follows:

```
PRINT  FR=name {IFRMM>n}
               {OQLEN>n}
               {CONGSCNT>n}
               {FDISCARD>n}

       [STARTT=hh:mm:ss] [STOPT=hh:mm:ss] [STARTD=ddmmmyyyy]
       [STOPD=ddmmmyyyy] [SMFID=xxxx] [NOECHO] [TITLE='text']
       [EXDAYS=dates] [PREVDAYS=n]
```

The example below shows a PRINT control statement that requests a report for all Frame Relay resources:

```
                                        Column 72
PRINT FR=*                                     X
      STARTD=05MAR2001 STOPD=05MAR2001         X
      STARTT=09:00   STOPT=13:00               X
      TITLE='COMPUTER ASSOCIATES'
```

Requesting TIC3 Statistics

The PRINT control statement requesting TIC3 statistics is as follows:

```
PRINT TIC3=name {IFRMM>n}
                {BYTESS>n}
                {RETRANS>n}
                {FRAMES>n}
                {EFRMS>n}
                {UTL>n}

      [STARTT=hh:mm:ss] [STOPT=hh:mm:ss] [STARTD=ddmmmyyyy]
      [STOPD=ddmmmyyyy] [SMFID=xxxx] [NOECHO] [TITLE='text']
      [EXDAYS=dates] [PREVDAYS=n]
```

The example below shows a PRINT control statement that requests a report for all TIC3 resources having utilization greater than 20.5%:

```
                                        Column 72
PRINT TIC3=* UTL>205                           X
      STARTD=05MAR2001 STOPD=05MAR2001         X
      STARTT=09:00   STOPT=13:00               X
      TITLE='COMPUTER ASSOCIATES'
```

Requesting APPN Directory Services Data

The PRINT control statement requesting APPN directory services data is as follows:

```
PRINT DSD=*

      [STARTT=hh:mm:ss] [STOPT=hh:mm:ss] [STARTD=ddmmmyyyy]
      [STOPD=ddmmmyyyy] [SMFID=xxxx] [NOECHO] [TITLE='text']
      [EXDAYS=dates] [PREVDAYS=n]
```

Requesting APPN Topology Data

The PRINT control statement requesting APPN topology data is as follows:

```
PRINT TGY=*

      [STARTT=hh:mm:ss] [STOPT=hh:mm:ss] [STARTD=ddmmmyyyy]
      [STOPD=ddmmmyyyy] [SMFID=xxxx] [NOECHO] [TITLE='text']
      [EXDAYS=dates] [PREVDAYS=n]
```

Requesting APPN VTAM RTP Data

The PRINT control statement requesting VTAM Rapid Transit Protocol dynamic physical unit data is as follows:

```
PRINT RTP=*

      [STARTT=hh:mm:ss] [STOPT=hh:mm:ss] [STARTD=ddmmmyyyy]
      [STOPD=ddmmmyyyy] [SMFID=xxxx] [NOECHO] [TITLE='text']
      [EXDAYS=dates] [PREVDAYS=n]
```

Requesting MNPS Application Data

The PRINT control statement requesting MNPS application data is as follows:

```
PRINT APD=*

      [STARTT=hh:mm:ss] [STOPT=hh:mm:ss] [STARTD=ddmmmyyyy]
      [STOPD=ddmmmyyyy] [SMFID=xxxx] [NOECHO] [TITLE='text']
      [EXDAYS=dates] [PREVDAYS=n]
```

Requesting MNPS Application Recovery Data

The PRINT control statement requesting APPN application recovery data is as follows:

```
PRINT ARD=*

      [STARTT=hh:mm:ss] [STOPT=hh:mm:ss] [STARTD=ddmmmyyyy]
      [STOPD=ddmmmyyyy] [SMFID=xxxx] [NOECHO] [TITLE='text']
      [EXDAYS=dates] [PREVDAYS=n]
```

Requesting MNPS Coupling Facility Structure Data

The PRINT control statement requesting MNPS coupling facility structure data is as follows:

```
PRINT CFS=*

      [STARTT=hh:mm:ss] [STOPT=hh:mm:ss] [STARTD=ddmmmyyyy]
      [STOPD=ddmmmyyyy] [SMFID=xxxx] [NOECHO] [TITLE='text']
      [EXDAYS=dates] [PREVDAYS=n]
```

Requesting TCP/IP Statistics

The PRINT control statement requesting TCP/IP statistics is as follows:

```
PRINT TCPIP=name|* {RTT>n}     [FORIP=ip_address]
                   {REXMIT>n}  [FORPORT=portid]
                   {#BYTES>n}  [FORSUB=subnet_address]

      [STARTT=hh:mm:ss] [STOPT=hh:mm:ss] [STARTD=ddmmmyyyy]
      [STOPD=ddmmmyyyy] [SMFID=xxxx] [NOECHO] [TITLE='text']
      [EXDAYS=dates] [PREVDAYS=n]
```

The example below shows a PRINT control statement that requests a report for all TCP/IP sessions whose round trip time is greater than five tenths of a second:

```
                                          Column 72
PRINT TCPIP=* RTT>5                              X
      STARTD=05MAR2001 STOPD=05MAR2001           X
      STARTT=09:00   STOPT=13:00                 X
      TITLE='COMPUTER ASSOCIATES'
```

PRINT Statement Parameter Descriptions

You must specify one of the following network resources as the first parameter on each PRINT statement. A description of each record type is provided in the *NetSpy Administrator Guide*.

Resource	Explanation
APPL	Selects session statistics from NetSpy application records (type A).
LU	Selects session statistics from NetSpy terminal and session statistics records (type T and type S or U).
LINE	When followed by a parameter associated with terminals, selects session statistics from terminal and session records for all terminals associated with a specific line (type T and type S or U). When followed by a parameter associated with NCP data, selects data from NCP statistics records (type N). When reporting on VTAM statistics, NetSpy uses the VTAM major node name as the line name in the following situations *provided the major node has been defined to NetSpy with a DEFINE statement*: ■ For switched SDLC lines on NCPs that do not define dynamic reconfiguration ■ For local SNA nodes ■ For local non-SNA nodes For SDLC non-switched lines, NetSpy uses the line name as defined in the NCP.

Resource	Explanation
	When reporting on VTAM statistics for switched SDLC lines on NCPs defined with dynamic reconfiguration NPA=(YES,DR), NetSpy uses the real line name. If your NCPs are defined with dynamic reconfiguration, do not define the switched major node to NetSpy.
CLUSTER	When followed by a parameter associated with terminals, selects session statistics from terminal and session records for all terminals associated with the cluster (type T and type S or U). When followed by a parameter associated with NCP data, selects data from NCP statistics records (type N). When reporting on VTAM statistics, NetSpy uses the PU name as the cluster name in the following situations, provided the major node is defined to NetSpy: ■ For switched SDLC lines on NCPs that do not define dynamic reconfiguration ■ For non-switched SDLC lines ■ For local SNA nodes For local non-SNA nodes, NetSpy uses the major node name, *provided the major node has been defined to NetSpy with a DEFINE statement*. When reporting on VTAM statistics for switched SDLC lines on NCPs defined with dynamic reconfiguration NPA=(YES,DR), NetSpy uses the real PU name. If your NCPs are defined with dynamic reconfiguration, do not define the switched major node to NetSpy.
NCP	Selects NCP statistics from NetSpy NCP records (type N).
TERMINAL	Selects NCP statistics from NetSpy NCP records: type N, or type C (for network session or gateway accounting).
VR	Selects statistics for a virtual route from NetSpy records (type V).
BUFFERS	Selects VTAM buffer statistics from NetSpy records (type B).
CA	Selects NCP statistics for channel adapter from NetSpy NCP (type N) records.
NTRI	Selects NTRI statistics (type N).
X25STAT	Selects X.25 statistics for multi-channel (MCH) lines, MCH PUs, and virtual circuits from NetSpy NCP (type N) records.
X25LINE	Selects X.25 statistics for MCH lines from NetSpy NCP (type N) records.

Resource	Explanation
X25PU	Selects X.25 statistics for multi-channel physical units from NetSpy NCP (type N) records.
X25VC	Selects X.25 statistics for virtual circuits from NetSpy NCP (type N) records.
ETH	Selects Ethernet statistics.
FR	Selects Frame Relay statistics.
TIC3	Selects TIC3 physical link and TIC3 logical PU statistics.
TP	Selects NCP transmission priority records.
NCPCB	Selects NCP control block statistics.
DSD	Selects APPN directory services data.
TGY	Selects APPN topology data.
RTP	Selects VTAM RTP data.
APD	Selects MNPS application data.
ARD	Selects MNPS application recovery data.
CFS	Selects MNPS coupling facility structure data.
TCPIP	Selects TCP/IP statistics.

You can specify additional parameters on the PRINT statement from the following list. In this list, *n* is an integer representing either tenths of seconds or a whole number, depending upon the context in which the integer is used.

Parameter	Explanation
AHRSP ANRSP	Selects records with either average host or average network response times exceeding *n*. AHRSP is valid with APPL or terminal groups only. ANRSP is valid with APPL or terminal groups or virtual routes.
WHRSP WNRSP	Selects records with either worst host or worst network response times exceeding *n*. Valid with APPL or terminal groups only.
AURSP	Selects records with average user response times exceeding *n*. Valid with APPL or terminal groups only.
#MSGS (or NOMSGS)	Selects records with the number of messages exceeding the input limit *n*. Valid with APPL or terminal groups or virtual routes.
#IMSGS	Selects records with the number of inbound PIUs exceeding the limit *n*. Valid with virtual routes.
#OMSGS	Selects records with the number of outbound PIUs exceeding the

Parameter	Explanation
	limit *n*. Valid with virtual routes.
#TMSGS	Selects records with a total number of inbound and outbound PIUs exceeding the limit *n*. Valid with virtual routes.
#SESS (or NOSESS)	Selects records with the number of concurrent sessions exceeding the input limit *n*. Valid with APPL only. **Note:** The number of sessions indicated in the output is counted at the time the record is written; it is not an average. Therefore, if all users log off from the application during an interval, the number of sessions reported could be zero and the number of transactions could be greater than zero.
#TRANS (or NOTRANS)	Selects records with the number of transactions exceeding the specified limit *n*. Valid with APPL or terminal groups only.
#BYTES	Selects records with number of bytes sent and received exceeding *n*. Valid with APPL, terminal groups, and TCPIP only.
CCU	Selects NCP records having an NCP 37x5 cycle utilization greater than the specified limit *n*. Valid with NCP only.
UBUF	Selects NCP records having an NCP buffer utilization greater than the specified limit *n*. Valid with NCP only.
CHQ	Selects NCP records having an NCP channel hold queue greater than the specified limit *n*. Valid with NCP only.
UTL	Selects NCP records having line utilization greater than the specified limit *n* (for LINE and X25LINE resource types); NTRI records having TIC utilization greater than the specified limit *n* (for NTRI resource type); and TIC3 records where the percentage of time the TIC3 resource was utilized is greater than *n* (for TIC3 resource type).
MSGSM	Selects NCP records having a message rate greater than the specified limit *n*. Valid with the LINE, CLUSTER, TERMINAL, and CA resource types.
OQLEN	Selects NCP records having an outbound queue length greater than the specified limit *n* (for LINE, X25LINE, CLUSTER, TERMINAL, CA, ETH, and FR and resource types), and selects NTRI records having an outbound queue length greater than the specified limit *n* (for NTRI resource type).
CONGSCNT	Selects NCP records having a congestion count greater than the specified limit *n* (for ETH and FR resource types only; for FR, this is the sum of forward congestion and backward congestion), and selects NTRI records having a congestion count greater than the specified limit *n* (for NTRI resource type only).

Parameter	Explanation
ERRS	Selects NCP records having error counts greater than the specified limit *n*. Valid with the LINE and CLUSTER resource types.
IFRMM	Selects NCP, NTRI, or X.25 MCH lines records with an information frames per minute rate greater than the specified limit *n*. Valid with NTRI, X25LINE, ETH, FR, and TIC3 resource types.
PACKM	Selects X.25 MCH physical units or virtual circuits with a packets per minute rate greater than the specified limit *n*. Valid only with the X25PU and X25VC resource types.
HIGHPCT	Selects NCP records with the percentage of High Priority I-frames exceeding *n*. Valid with the TP resource only.
MEDPCT	Selects NCP records with the percentage of Medium Priority I-frames exceeding *n*. Specify *n* in tenths of a percent. For example, for 10.5 percent, you would enter 105. Valid with the TP resource only.
LOWPCT	Selects NCP records with the percentage of Low Priority I-frames exceeding *n*. Valid with the TP resource only.
COLL	Selects Ethernet records with the number of single and multiple collisions exceeding *n*. Valid with ETH resource type only.
FDISCARD	Selects Frame Relay records with the number of discarded frames exceeding *n*. Valid with FR resource type only.
BYTESS	Selects TIC3 records where the total number of sent and received bytes per second exceeds *n*. Valid with TIC3 resource type only.
RETRANS	Selects TIC3 records where the percentage of retransmitted bytes and/or frames exceeds *n*. Valid with TIC3 resource type only.
FRAMES	Selects TIC3 records where the total number of sent and received frames exceeds *n*. Valid with TIC3 resource type only.
EFRMS	Selects TIC3 records where the number of error frames exceeds *n*. Valid with TIC3 resource type only.
MAXPCT	Selects NCP control block records with the maximum percentage of all control blocks in use since NCP initialization exceeding *n*. Specify *n* in tenths of a percent. For example, for 10.5 percent, you would enter 105. Valid with NCPCB resource type only.
CURPCT	Selects NCP control block records with the current percent of all control blocks in use for the pool and interval exceeding *n*. Specify *n* in tenths of a percent. For example, for 10.5 percent, you would enter 105. Valid with NCPCB resource type only.

Parameter	Explanation
MAXDPCT	Selects NCP control block records with the maximum percentage of dynamic control blocks used for the pool and interval exceeding *n*. Specify *n* in tenths of a percent. For example, for 10.5 percent, you would enter 105. Valid with NCPCB resource type only.
FORAPPL	Selects terminal records associated with a certain application. FORAPPL allows for generic character qualifiers. Valid with terminal groups only.
APPLDSGN	States an inefficiency in an application that NetSpy has identified leading to poor response times. Valid with terminal groups only. Values for these application design issues include: NULLRUS: Null writes issued MIDOUTDR: DR not last write NRSTMDT: MDT not reset In the batch report, an "X" will appear under one or more of these categories, depending upon the inefficiencies that NetSpy identifies. **Note:** When you specify the APPLDSGN parameter, the TARGETS statistics are not printed because they are overlaid with the application design information.
LOCAL or REMOTE	Specifies whether the report includes VTAM data on only resources in local major nodes (LOCAL) or only remote resources for NCPs (REMOTE). If you do not specify either LOCAL or REMOTE, VTAM data on both types of resources are included in the report.
EXCLU62 or ONLYLU62	Specifies whether to include LU 6.2 information: ■ EXCLU62 - Excludes LU 6.2 information ■ ONLYLU62 - Includes only LU 6.2 information Valid with VTAM APPL, LU, LINE, and CLUSTER.
SA	Lists statistics for a specific destination subarea in the backbone network. Valid with VR only. Do not precede single digit numbers with a zero (0).
ACCT	Selects both network session and gateway accounting records. Valid with TERMINAL only.
NSA	Selects only network session accounting records. Valid with TERMINAL only.
GWA	Selects only network gateway accounting records. Valid with TERMINAL only.

Parameter	Explanation
SESS	Selects the type of network accounting records on which to report: END or START. The default selects all the record types: start, end, and interval. Valid for the ACCT, NSA, and GWA parameters only.
RTT	Selects records with round trip time exceeding *n*. Valid with TCPIP only.
REXMIT	Selects records with retransmitted segment count exceeding *n*. Valid with TCPIP only.
FORIP	Selects TCP/IP records associated with a certain IP address. FORIP allows for generic character qualifiers. Valid with TCPIP only. **Note:** If you use special characters (like the period) the address *must* be enclosed in quotes.
FORPORT	Selects TCP/IP records associated with a certain port ID. FORPORT allows for generic character qualifiers. Valid with TCPIP only.
FORSUB	Selects TCP/IP records associated with a certain subnet. FORSUB allows for an asterisk (*) qualifier to replace a group within an IP address, for example, '*.*.*.*/25'. Valid with TCPIP only. **Note:** If you use special characters (like the period) the address *must* be enclosed in quotes.

The following optional parameters can be used with any resource:

Parameter	Explanation
STARTT STOPT	Selects start and stop times, specified as *hh:mm* or *hh:mm:ss*.
STARTD STOPD	Selects the start and stop date, specified as Gregorian *ddmmmyyyy,* Julian *yyyyddd,* or TODAY (works as if you specified the current date). To specify the year 2001, type 01.
SMFID	Selects records associated with the system matching the input JES system ID or the HOSTID override in the INITPRM member.
NOECHO	Suppresses the echo printing of the individual control statement for the current report.
TITLE	Specifies a title that is printed as the second line in report headings. It must be enclosed in single quotes. A single quote within a title must be indicated by two single quotes together with no space between them. The TITLE statement cannot be continued to a subsequent line.

Parameter	Explanation

EXDAYS	Specifies days for which data is omitted from the batch report. You can specify either days, entire weekends, or files that in turn specify days and weekends.
	
	To specify days, use one of the following formats, listing multiple days within parentheses and separated by at least one space or comma, or use the word WEEKENDS to specify all Saturdays and Sundays:
	
	`EXDAYS=dddyyyy` `EXDAYS=ddmmmyyyy`
	`EXDAYS=MONDAY` `EXDAYS=WEEKENDS`
	
	For example:
	
	`EXDAYS=(01JAN2001,04JUL2001,25DEC2001,WEEKENDS)`
	`EXDAYS=(0012001,1852001,3592001,SATURDAY,SUNDAY)`
	
	specifies January 1, 2001, July 4, 2001, December 25, 2001, and all Saturdays and Sundays. To specify files, use this format, separating multiple files with at least one space or comma:
	
	`EXDAYS=FILE(file1,file2)`
	
	Valid files include any member of the data set identified through the //RSCPARM DD statement in the batch report JCL. This member must be fixed and blocked, with a logical record length of 80 bytes.

PREVDAYS	Specifies a number of days prior to the current day for which data is included in the batch report (excluding days specified with EXDAYS). For example, if you specify: `PREVDAYS=6 EXDAYS=(WEEKENDS,TUESDAY)` And run the report on Thursday, it will include data from the last six days, that is, Wednesday, Monday, last Friday, last Thursday, last Wednesday and last Monday. PREVDAYS does not include excluded days in its count.

The SUMMARY Control Statement

The SUMMARY control statement requests a summary report of a network resource. It reports a parameter of your choice or a fixed set of parameters for a group of applications, NCPs, lines, clusters, or terminals. The report can be summarized by time intervals or by applications. When summarizing by time intervals, you can choose a reporting interval different from your NetSpy record-collecting interval. (However, the reporting interval must be a positive integer multiple of the record-collecting interval.) The times shown on SUMMARY batch reports are beginning-of-interval times.

Statement Parameters

Explanations of all the parameters in the SUMMARY control statements begin at "SUMMARY Statement Parameter Descriptions."

Requesting VTAM Statistics

The SUMMARY control statement requesting VTAM statistics is as follows:

```
SUMMARY  {APPL=name}     {ALL}    [XDOMAIN]
                         {AHRSP}  [EXCLU62|ONLYLU62]
                         {ANRSP}
                         {AURSP}
                         {WHRSP}
                         {WNRSP}
                         {#SESS}
                         {#MSGS}
                         {#BYTES}
                         {#TRANS}
                         {RBUCKETS}

         {LU=name}       {ALL}    [FORAPPL=name]
                         {AHRSP}  [BYAPLL]
                         {ANRSP}  [VSESSION]
                         {AURSP}  [LOCAL|REMOTE]
                         {WHRSP}  [EXCLU62|ONLYLU62]
                         {WNRSP}
                         {#MSGS}
                         {#BYTES}
                         {#TRANS}
                         {GRBUCKET}
                         {RBUCKETS}

         {LINE=name}     {ALLRSP} [FORAPPL=name]
         {CLUSTER=name}  {AHRSP}  [BYAPLL]
                         {ANRSP}  [VSESSION]
                         {AURSP}  [LOCAL|REMOTE]
                         {WHRSP}  [EXCLU62|ONLYLU62]
                         {WNRSP}
                         {#MSGS}
                         {#BYTES}
                         {#TRANS}
                         {GRBUCKET}
                         {RBUCKETS}
```

```
{VR=number}    {ALL}    [SA=number]
               {ANRSP}
               {#TMSGS}
               {#OMSGS}
               {#IMSGS}

[COMBINED] [INTERVAL=MINS(n)|DAYS(d)] [BYINTVL] [PERCENT]
[BYDAY] [MAX>n] [MAX#RPT=n] [MAX#ITVL=n]
[STARTT=hh:mm:ss] [STOPT=hh:mm:ss] [STARTD=ddmmmyyyy]
[STOPD=ddmmmyyyy] [SMFID=xxxx] [NOECHO] [TITLE='text']
[EXDAYS=dates] [PREVDAYS=n]
```

The example below shows a SUMMARY control statement that requests a report of the number of messages for all CICS applications (VTAM statistics).

```
                                        Column 72
SUMMARY APPL=CICS* #MSGS                         X
        MAX>0                                    X
        INTERVAL=DAYS(1)                         X
        STARTD=15JAN2001 STOPD=19JAN2001         X
        STARTT=09:00   STOPT=17:00               X
        TITLE='COMPUTER ASSOCIATES'
```

You can specify any of the following as a resource name, FORAPPL name, or SA number:

- Specific name
- Generic name
- Resource list specification. (See Resource Lists Specifications.)

Requesting FRAME RELAY Statistics

The SUMMARY control statement requesting FRAME RELAY statistics is as follows:

```
SUMMARY   {FR=name}   {ALL}
                      {IFRMM}
                      {OQLEN}
                      {CONGSCNT}
                      {FDISCARD}

[COMBINED] [INTERVAL=MINS( n)|DAYS( d)] [BYINTVL] [PERCENT]
[BYDAY] [MAX> n] [MAX#RPT= n] [MAX#ITVL= n]
[STARTT= hh:mm:ss] [STOPT= hh:mm:ss] [STARTD= ddmmmyyyy]
[STOPD= ddmmmyyyy] [SMFID= xxxx] [NOECHO] [TITLE=' text']
[EXDAYS= dates] [PREVDAYS= n]
```

Requesting NCP Statistics

The SUMMARY control statement requesting NCP statistics is as follows:

```
SUMMARY  {NCP=name}       {ALL}
                          {CCU}
                          {CHQ}
                          {UBUF}

         {LINE=name}      {ALLUTL}
         {CLUSTER=name}   {ERRS}
                          {MSGSM}
                          {OQLEN}
                          {UTL}

         {TERMINAL=name}  {ALL}
         {CA=name}        {MSGSM}
                          {OQLEN}

         [COMBINED] [INTERVAL=MINS(n)|DAYS(d)] [BYINTVL] [PERCENT]
         [BYDAY] [MAX>n] [MAX#RPT=n] [MAX#ITVL=n]
         [STARTT=hh:mm:ss] [STOPT=hh:mm:ss] [STARTD=ddmmmyyyy]
         [STOPD=ddmmmyyyy] [SMFID=xxxx] [NOECHO] [TITLE='text']
         [EXDAYS=dates] [PREVDAYS=n]
```

The example below shows a SUMMARY control statement that requests the NCP cycle utilization for all NCPs defined to NetSpy (NCP statistics).

```
                                          Column 72
SUMMARY NCP=* CCU                                X
        INTERVAL=DAYS(1)                         X
        STARTD=15APR2001 STOPD=19APR2001         X
        STARTT=09:00   STOPT=17:00               X
        TITLE='COMPUTER ASSOCIATES'
```

Requesting NTRI Statistics

The SUMMARY control statement requesting NTRI statistics is as follows:

```
SUMMARY NTRI=name {ALL}
                  {UTL}
                  {IFRMM}
                  {OQLEN}
                  {CONGSCNT}

        [COMBINED] [INTERVAL=MINS(n)|DAYS(d)] [BYINTVL] [PERCENT]
        [BYDAY] [MAX>n] [MAX#RPT=n] [MAX#ITVL=n]
        [STARTT=hh:mm:ss] [STOPT=hh:mm:ss] [STARTD=ddmmmyyyy]
        [STOPD=ddmmmyyyy] [SMFID=xxxx] [NOECHO] [TITLE='text']
        [EXDAYS=dates] [PREVDAYS=n]
```

The example below shows a SUMMARY control statement that requests a summary of all NTRI statistics.

```
                                          Column 72
SUMMARY NTRI=* ALL                               X
        INTERVAL=DAYS(1)                         X
        STARTD=15JAN2001 STOPD=19JAN2001         X
        STARTT=09:00   STOPT=17:00               X
        TITLE='COMPUTER ASSOCIATES'
```

Requesting X.25 Statistics

The SUMMARY control statement requesting X.25 statistics is as follows:

```
SUMMARY {X25LINE=name} {ALLUTL}
                       {UTL}
                       {IFRMM}
                       {OQLEN}

        {X25PU=name}   {PACKM}
                       {ALLUTL}

        {X25VC=name}   {PACKM}
                       {ALLUTL}

         [COMBINED] [INTERVAL=MINS(n)|DAYS(d)] [BYINTVL] [PERCENT]
         [BYDAY] [MAX>n] [MAX#RPT=n] [MAX#ITVL=n]
         [STARTT=hh:mm:ss] [STOPT=hh:mm:ss] [STARTD=ddmmmyyyy]
         [STOPD=ddmmmyyyy] [SMFID=xxxx] [NOECHO] [TITLE='text']
         [EXDAYS=dates] [PREVDAYS=n]
```

The example below shows a SUMMARY control statement that requests a summary of all X.25 MCH line information for all X.25 MCH lines defined to NetSpy (NCP statistics).

```
                                          Column 72
SUMMARY X25LINE=* ALLUTL                         X
        INTERVAL=DAYS(1)                         X
        STARTD=15APR2001 STOPD=19APR2001         X
        STARTT=09:00   STOPT=17:00               X
        TITLE='COMPUTER ASSOCIATES'
```

Requesting APPN Directory Services Data

The SUMMARY control statement requesting APPN directory services data is as follows:

```
SUMMARY DSD=* ALL

        [COMBINED] [INTERVAL=MINS(n)|DAYS(d)] [BYINTVL] [PERCENT]
        [BYDAY] [MAX>n] [MAX#RPT=n] [MAX#ITVL=n]
        [STARTT=hh:mm:ss] [STOPT=hh:mm:ss] [STARTD=ddmmmyyyy]
        [STOPD=ddmmmyyyy] [SMFID=xxxx] [NOECHO] [TITLE='text']
        [EXDAYS=dates] [PREVDAYS=n]
```

Requesting APPN Topology Data

The SUMMARY control statement requesting APPN topology data is as follows:

```
SUMMARY TGY=* ALL

        [COMBINED] [INTERVAL=MINS(n)|DAYS(d)] [BYINTVL] [PERCENT]
        [BYDAY] [MAX>n] [MAX#RPT=n] [MAX#ITVL=n]
        [STARTT=hh:mm:ss] [STOPT=hh:mm:ss] [STARTD=ddmmmyyyy]
        [STOPD=ddmmmyyyy] [SMFID=xxxx] [NOECHO] [TITLE='text']
        [EXDAYS=dates] [PREVDAYS=n]
```

Requesting APPN VTAM RTP Data

The SUMMARY control statement requesting VTAM Rapid Transit Protocol dynamic physical unit data is as follows:

```
SUMMARY RTP=* ALL

        [COMBINED] [INTERVAL=MINS(n)|DAYS(d)] [BYINTVL] [PERCENT]
        [BYDAY] [MAX>n] [MAX#RPT=n] [MAX#ITVL=n]
        [STARTT=hh:mm:ss] [STOPT=hh:mm:ss] [STARTD=ddmmmyyyy]
        [STOPD=ddmmmyyyy] [SMFID=xxxx] [NOECHO] [TITLE='text']
        [EXDAYS=dates] [PREVDAYS=n]
```

Requesting TCP/IP Statistics

The SUMMARY control statement requesting TCP/IP statistics is as follows:

```
SUMMARY TCPIP=name|*  {ALL}    [FORIP=ip_address]
                      {RTT}    [FORPORT=portid]
                      {REXMIT} [FORSUB=subnet_address]
                      {#BYTES}

        [COMBINED] [INTERVAL=MINS(n)|DAYS(d)] [BYINTVL] [PERCENT]
        [BYDAY] [MAX>n] [MAX#RPT=n] [MAX#ITVL=n]
        [STARTT=hh:mm:ss] [STOPT=hh:mm:ss] [STARTD=ddmmmyyyy]
        [STOPD=ddmmmyyyy] [SMFID=xxxx] [NOECHO] [TITLE='text']
        [EXDAYS=dates] [PREVDAYS=n]
```

The example below shows a SUMMARY control statement that summarizes the number of bytes sent and received for all TCP/IP connections with IP address 141.202.10.23:

```
                                            Column 72
SUMMARY TCPIP=* #BYTES FORIP=141.202.10.23          X
        INTERVAL=DAYS(1)                            X
        STARTD=15APR2001 STOPD=15APR2001            X
        STARTT=09:00   STOPT=13:00                  X
        TITLE='COMPUTER ASSOCIATES'
```

Requesting TIC3 Statistics

The SUMMARY control statement requesting TIC3 statistics is as follows:

```
SUMMARY   {TIC3=name}   {ALL}
                        {IFRMM}
                        {BYTESS}
                        {RETRANS}
                        {FRAMES}
                        {UTL}

[COMBINED] [INTERVAL=MINS( n)|DAYS( d)] [BYINTVL] [PERCENT]
[BYDAY] [MAX> n] [MAX#RPT= n] [MAX#ITVL= n]
[STARTT= hh:mm:ss] [STOPT= hh:mm:ss] [STARTD= ddmmmyyyy]
[STOPD= ddmmmyyyy] [SMFID= xxxx] [NOECHO] [TITLE=' text']
[EXDAYS= dates] [PREVDAYS= n]
```

SUMMARY Statement Parameter Descriptions

You must specify one of the following network resources as the first parameter on each SUMMARY statement. Descriptions of each record type are provided in the *NetSpy Administrator Guide.*

Resources		Explanation
APPL	NTRI	See PRINT Statement Parameter Descriptions for explanations of each resource type.
LU	X25LINE	
LINE	X25PU	
CLUSTER	X25VC	
NCP	DSD	
TERMINAL	TGY	
VR	RTP	
CA	TCPIP	

You can also specify the following parameters on the SUMMARY statement:

Parameter	Explanation
ALL	Lists all parameters for the chosen network resource (APPL, LU, NCP, TERMINAL, VR, NTRI, DSD, TGY, RTP, or TCPIP).
ALLRSP	Lists all line/cluster response-time-related parameters. Valid with LINE or CLUSTER only.
ALLUTL	Lists all line/cluster utilization-related parameters. Valid with LINE, CLUSTER, X25LINE, X25PU, and X25VC.
AHRSP ANRSP	Lists average host or network time for each time interval. Valid with APPL or terminal groups only.
WHRSP WNRSP	Lists worst host or network time for each time interval. Valid with APPL or terminal groups only.
AURSP	Lists average user response time for each time interval. Valid with APPL or terminal groups only.
#MSGS (or NOMSGS)	Lists number of messages for each time interval. (A message in this case is a complete PIU or chain of PIUs.) Valid with APPL or terminal groups only.
#IMSGS	Selects records with the number of inbound PIUs exceeding the limit *n*. Valid with virtual routes.
#OMSGS	Selects records with the number of outbound PIUs exceeding the limit *n*. Valid with virtual routes.

Parameter	Explanation
#TMSGS	Selects records with the number of inbound and outbound PIUs exceeding the limit *n*. Valid with virtual routes.
#SESS (or NOSESS)	Lists average number of concurrent sessions at the end of the collection interval for APPL for each reporting time interval. When selected for a terminal group, lists the total number of sessions for each time interval.
#TRANS (or NOTRANS)	Lists number of transactions (inputs) for each time interval. Valid with APPL or terminal groups only.
#BYTES (or NOBYTES)	Lists the number of bytes sent and received for each interval. The byte count includes the user data plus three bytes for every message sent (RH). Valid with APPL, terminal groups, and TCPIP only.
RBUCKETS	Lists response time bucket percentages for the four targets specified for each time interval. Valid with APPL or terminal groups only. If both the TARGETS=USER and UTARGETS parameters are specified, this parameter lists percentages for all eight targets (for terminal groups only).
GRBUCKET	Lists response time bucket percentages for the four global targets specified for each time interval. Valid with terminal groups only.
CCU	Lists NCP cycle utilization for each time interval. Valid with NCP only.
UBUF	Lists NCP buffer utilization for each time interval. Valid with NCP only.
CHQ	Lists NCP channel hold queue for each time interval. Valid with NCP only.
UTL	Lists line utilization (for LINE and X25LINE resource types) or TIC utilization (for NTRI resource type) for each time interval.
MSGSM	Lists messages per minute for each time interval. A message in this case is a single PIU segment. Valid with LINE, CLUSTER, TERMINAL, and CA.
ERRS	Lists error count for each time interval. Valid with LINE and CLUSTER.
OQLEN	Lists outbound queue length for each time interval. Valid with LINE, X25LINE, CLUSTER, TERMINAL, CA, and NTRI.
CONGSCNT	Lists the congestion count for each time interval. Valid with NTRI resource type only.

Parameter	Explanation
XDOMAIN	Includes application records for cross-domain applications. The default is to exclude these records. (Cross-domain applications are monitored only when using a session manager.) Valid with APPL only. Exclude cross-domain application records if you have another NetSpy system resident in the cross-domain system that collects data for these applications. By doing so, you avoid data duplication.
FORAPPL	Selects terminal records associated with a certain application. FORAPPL allows for generic character qualifiers. Valid with terminal groups only.
BYAPPL	Lists selected variable by application instead of by time. Valid with terminal groups only. **Note:** The BYAPPL and BYINTVL parameters are mutually exclusive when used with the SUMMARY ALL control statement. The INTERVAL parameter becomes invalid when used with BYAPPL.
VSESSION	Includes virtual session records as well as real session records. To avoid duplication, the default excludes the virtual session records unless you request a report using either the BYAPPL or FORAPPL parameter. Valid with terminal groups only.
LOCAL or REMOTE	Specifies whether the report includes VTAM data on only resources in local major nodes (LOCAL) or only remote resources for NCPs (REMOTE). If you do not specify either LOCAL or REMOTE, VTAM data for both types of resources is included in the report.
EXCLU62 or ONLYLU62	Specifies whether to include LU 6.2 information: ■ EXCLU62 - Excludes LU 6.2 information ■ ONLYLU62 - Includes only LU 6.2 information Valid with VTAM APPL, LU, LINE, and CLUSTER.
SA (SUBAREA)	Lists statistics for a specific destination subarea in the backbone network. Valid with VR only. Do not precede single-digit numbers with a zero (0).
IFRMM	Lists the information frames per minute rate for each interval. Valid for the NTRI and X25LINE resource types.
PACKM	Lists the packets per minute rate for each interval. Valid for the X25PU and X25VC resource types.
RTT	Lists the round trip time for each interval. Valid with TCPIP only.

Parameter	Explanation
REXMIT	Lists the retransmitted segment count for each interval. Valid with TCPIP only.
FORIP	Selects TCP/IP records associated with a certain IP address. FORIP allows for generic character qualifiers. Valid with TCPIP only. **Note:** If you use special characters (like the period) the address *must* be enclosed in quotes.
FORPORT	Selects TCP/IP records associated with a certain port ID. FORPORT allows for generic character qualifiers. Valid with TCPIP only.
FORSUB	Selects TCP/IP records associated with a certain subnet. FORSUB allows for an asterisk (*) qualifier to replace a group within an IP address, for example, '*.*.*.*/25'. Valid with TCPIP only. **Note:** If you use special characters (like the period) the address *must* be enclosed in quotes.

The following optional parameters can be used with any resource:

Parameter	Explanation
STARTT	See STARTT
STOPT	See STOPT
STARTD	See STARTD
STOPD	See STOPD.
SMFID	See SMFID
NOECHO	See NOECHO
TITLE	See TITLE
EXDAYS	See EXDAYS
PREVDAYS	See PREVDAYS
COMBINED	Combines all resources matching the generic name qualifier into one single report. If COMBINED is not specified and a generic qualifier is used, then a separate report is produced for each resource matching the generic name. When you specify COMBINED: ■ The *average* of all resources matching the generic name qualifier is reported for the following: AHRSP CCU ANRSP UBUF

Parameter	Explanation
	AURSP CHQ #SESS (for APPL) OQLEN RBUCKETS MSGSM GRBUCKET UTL ■ The *sum* of all resources matching the generic name qualifier is reported for the following parameters: #MSGS #BYTES #TRANS ERRS ■ The *maximum* of all resources matching the generic name qualifier is reported for the following parameters: WHRSP WNRSP #SESS (for LINE/CLUSTER) For more information about using the COMBINED parameter with CLUSTER or LINE, see the description in the chapter entitled "Displaying Real-time Data."
INTERVAL MINS(n) DAYS(d)	Selects a time-reporting interval different from the collecting interval in the NetSpy records. This value should not be smaller than the interval in the NetSpy records. If you use MINS(*n*), the value of *n* must be a positive integer multiple of the collection interval. This parameter is invalid if the BYAPPL parameter is specified. For example, to produce a weekly analysis report, specify INTERVAL=DAYS(7).
BYINTVL	Lists summarized output by interval instead of by network resource name. Valid with SUMMARY ALL, ALLRSP, and ALLUTL. **Note:** The BYAPPL and BYINTVL parameters are mutually exclusive when used with the SUMMARY ALL control statement. If you do specify both parameters, NetSpy ignores the one you specified first and uses the second one.
PERCENT	Indicates that, in addition to each value being summarized, its percentage of the total is also listed. Valid only with parameters that pertain to quantities (#MSGS, #TRANS, #BYTES, MSGSM, ERRS, IFRMM, and PACKM).

Parameter	Explanation
BYDAY	Requests that a separate report be produced for each day of data encountered in your file of NetSpy records. Otherwise, data for different days is summarized on one report up to a maximum of 100 lines. This selection can be used with the BYAPPL parameter.
MAX	The report is produced only if the highest peak is greater than the value entered. For SUMMARY ALL, ALLRSP, and ALLUTL reports, the MAX parameter functions as follows: ■ When you specify APPL or LU with the ALL or ALLRSP parameter, MAX equals the number of transactions. These are VTAM statistics. ■ When you specify LINE, CLUSTER, or TERMINAL with the ALLRSP parameter, MAX equals the number of transactions. These are VTAM statistics. ■ When you specify NCP with the ALL parameter, MAX equals the value of the CCU parameter. ■ When you specify LINE, CLUSTER, TERMINAL, X25LINES, or X25VCS with the ALL or ALLUTL parameter, MAX equals the total bytes per second. These are NCP statistics. ■ The MAX refers to packets per minute when you specify X25PUS with the ALLUTL parameter. ■ When you specify NTRI with the ALL parameter, MAX equals the total bytes per second.
MAX#RPT (or MAXNORPT)	Allows you to limit the maximum number of reports for this control statement (one report is produced for each resource matching a generic name). The default is 200. **Note:** The appendix "System Requirements" in the NetSpy *Getting Started guide* describes how many bytes of region storage batch reporting requires for each increment of the MAX#RPT parameter. You can use this figure to determine if a large value of MAX#RPT is the cause of a GETMAIN failure.
MAX#ITVL	Specifies the maximum number of intervals to summarize for each report. The default is 100.

The GRAPH Control Statement

The GRAPH control statement requests a graphic report of a network resource. It produces a graph of a single variable of your choice for a group of applications, terminals, NCPs, lines, clusters, or terminals. The graph can be plotted by time intervals or by applications. When plotting by time intervals, you can choose a reporting interval different from your NetSpy record-collecting interval. However, the reporting interval must be a positive integer multiple of the record-collecting interval. The times shown on GRAPH batch reports are beginning-of-interval times.

Statement Parameters

Explanations of all the parameters in the GRAPH control statements begin at GRAPH Statement Parameter Descriptions.

Requesting VTAM Statistics

The GRAPH control statement requesting VTAM statistics is as follows:

```
GRAPH  {APPL=name}     {AHRSP}  [XDOMAIN]
                       {ANRSP}  [EXCLU62|ONLYLU62]
                       {AURSP}
                       {WHRSP}
                       {WNRSP}
                       {#MSGS}
                       {#SESS}
                       {#BYTES}
                       {#TRANS}
                       {RBUCKETS}

       {LU=name}       {AHRSP}  [FORAPPL=name]
       {LINE=name}     {ANRSP}  [BYAPPL]
       {CLUSTER=name}  {AURSP}  [VSESSION]
                       {WHRSP}  [LOCAL|REMOTE]
                       {WNRSP}  [EXCLU62|ONLYLU62]
                       {#MSGS}
                       {#SESS}
                       {#BYTES}
                       {#TRANS}
                       {GRUCKET}
                       {RBUCKETS}

       {VR=number}     {ANRSP}   [SA=number]
                       {#TMSGS}
                       {#OMSGS}
                       {#IMSGS}

       [COMBINED] [INTERVAL=MINS(n)|DAYS(d)] [BYDAY] [SCALE=n]
       [PEAK] [HBAR] [MAX>n] [MAX#RPT=n] [MAX#ITVL=n]
       [STARTT=hh:mm:ss] [STOPT=hh:mm:ss] [STARTD=ddmmmyyyy]
       [STOPD=ddmmmyyyy] [SMFID=xxxx] [NOECHO] [TITLE='text']
       [EXDAYS=dates] [PREVDAYS=n]
```

The example below shows a GRAPH control statement that requests a combined graphic report showing the average user response time for all terminals in session with the application CICS1.

```
                                          Column 72
GRAPH LU=*  AURSP  COMBINED  FORAPPL=CICS1        X
      MAX>0                                       X
      BYDAY                                       X
      INTERVAL=MINS(15)                           X
      STARTD=10MAR2001 STOPD=10MAR2001            X
      STARTT=09:00   STOPT=17:00                  X
      TITLE='COMPUTER ASSOCIATES'
```

You can specify any of the following as a resource name, FORAPPL name, or SA number:

- Specific name
- Generic name
- Resource list specification. (See Resource Lists Specifications)

Requesting NCP Statistics

The GRAPH control statement requesting NCP statistics is as follows.

```
GRAPH {NCP=name}       {CCU}
                       {CHQ}
                       {UBUF}

      {LINE=name}      {UTL}
      {CLUSTER=name}   {ERRS}
                       {MSGSM}
                       {OQLEN}

      {TERMINAL=name} {MSGSM}
      {CA=name}       {OQLEN}

      [COMBINED] [INTERVAL=MINS(n)|DAYS(d)] [BYDAY] [SCALE=n]
      [PEAK] [HBAR] [MAX>n] [MAX#RPT=n] [MAX#ITVL=n]
      [STARTT=hh:mm:ss] [STOPT=hh:mm:ss] [STARTD=ddmmmyyyy]
      [STOPD=ddmmmyyyy] [SMFID=xxxx] [NOECHO] [TITLE='text']
      [EXDAYS=dates] [PREVDAYS=n]
```

The example below shows a GRAPH control statement that requests a graphic report of the line utilization for the line E01 (NCP statistics).

```
                                          Column 72
GRAPH LINE=E01 UTL                                X
      MAX>0                                       X
      BYDAY                                       X
      INTERVAL=MINS(15)                           X
      STARTD=10MAR2001 STOPD=10MAR2001            X
      STARTT=09:00   STOPT=17:00                  X
      TITLE='COMPUTER ASSOCIATES'
```

Requesting NTRI Statistics

The GRAPH control statement requesting NTRI statistics is as follows:

```
GRAPH {NTRI=name} {UTL}
                  {IFRMM}
                  {OQLEN}
                  {CONGSCNT}

      [COMBINED] [INTERVAL=MINS(n)|DAYS(d)] [BYDAY] [SCALE=n]
      [PEAK] [HBAR] [MAX>n] [MAX#RPT=n] [MAX#ITVL=n]
      [STARTT=hh:mm:ss] [STOPT=hh:mm:ss] [STARTD=ddmmmyyyy]
      [STOPD=ddmmmyyyy] [SMFID=xxxx] [NOECHO] [TITLE='text']
      [EXDAYS=dates] [PREVDAYS=n]
```

The example below shows a GRAPH control statement that requests a horizontal graphic report of information frames per minute with the axis scaled to 20 IFRMMs.

```
                                        Column 72
GRAPH NTRI=* IFRMM SCALE=20 HBAR                X
      MAX>0                                     X
      BYDAY                                     X
      INTERVAL=MINS(15)                         X
      STARTD=10MAR2001 STOPD=10MAR2001          X
      STARTT=09:00   STOPT=17:00                X
      TITLE='COMPUTER ASSOCIATES'
```

Requesting X.25 Statistics

The GRAPH control statement requesting X.25 statistics is as follows:

```
GRAPH {X25LINE=name} {UTL}
                     {IFRMM}
                     {OQLEN}

      {X25PU=name}   {PACKM}

      {X25VC=name}   {PACKM}

      [COMBINED] [INTERVAL=MINS(n)|DAYS(d)] [BYDAY] [SCALE=n]
      [PEAK] [HBAR] [MAX>n] [MAX#RPT=n] [MAX#ITVL=n]
      [STARTT=hh:mm:ss] [STOPT=hh:mm:ss] [STARTD=ddmmmyyyy]
      [STOPD=ddmmmyyyy] [SMFID=xxxx] [NOECHO] [TITLE='text']
      [EXDAYS=dates] [PREVDAYS=n]
```

The example below shows a GRAPH control statement that requests a graphic report of the information frames per minute for the X.25 MCH line E01 (NCP statistics).

```
                                        Column 72
GRAPH X25LINE=E01 IFRMM                         X
      MAX>0                                     X
      BYDAY                                     X
      INTERVAL=MINS(15)                         X
      STARTD=10MAR2001 STOPD=10MAR2001          X
      STARTT=09:00   STOPT=17:00                X
      TITLE='COMPUTER ASSOCIATES'
```

Requesting TCP/IP Statistics

The GRAPH control statement requesting TCP/IP statistics is as follows:

```
GRAPH {TCPIP=name|*} {RTT}     [FORIP=ip_address]
                     {REXMIT}  [FORPORT=portid]
                     {#BYTES}  [FORSUB=subnet_address]

      [COMBINED] [INTERVAL=MINS(n)|DAYS(d)] [BYDAY] [SCALE=n]
      [PEAK] [HBAR] [MAX>n] [MAX#RPT=n] [MAX#ITVL=n]
      [STARTT=hh:mm:ss] [STOPT=hh:mm:ss] [STARTD=ddmmmyyyy]
      [STOPD=ddmmmyyyy] [SMFID=xxxx] [NOECHO] [TITLE='text']
      [EXDAYS=dates] [PREVDAYS=n]
```

The example below shows a GRAPH control statement that requests a graphic report showing all retransmitted segments during TCP/IP sessions with LU A04TC001:

```
                                          Column 72
GRAPH TCPIP=A04TC001 REXMIT                       X
      MAX>0                                       X
      BYDAY                                       X
      INTERVAL=MINS(15)                           X
      STARTD=10MAR2001 STOPD=10MAR2001            X
      STARTT=09:00   STOPT=13:00                  X
      TITLE='COMPUTER ASSOCIATES'
```

GRAPH Statement Parameter Descriptions

You must specify one of the following network resources as the first parameter on each GRAPH statement. Descriptions of each record type are provided in the *NetSpy Administrator Guide.*

Resources		Explanation
APPL	CA	See PRINT Statement Parameter Descriptions for explanations of each resource type.
LU	NTRI	
LINE	X25LINE	
CLUSTER	X25PU	
NCP	X25VC	
TERMINAL	TCPIP	
VR		

You can specify additional parameters on the GRAPH statement from the following list:

Parameter	Explanation
AHRSP ANRSP	Graphs average host or network time for each time interval. Valid with APPL or terminal groups only.
WHRSP WNRSP	Graphs worst host or network time for each time interval. Valid with APPL or terminal groups only.
AURSP	Graphs average user response time for each time interval. Valid with APPL or terminal groups only.
#MSGS (or NOMSGS)	Graphs number of messages for each time interval. (A message in this case is a complete PIU or chain of PIUs.) Valid with APPL or terminal groups only.
#IMSGS	Selects records with the number of inbound PIUs exceeding the limit *n*. Valid with virtual routes.
#OMSGS	Selects records with the number of outbound PIUs exceeding the limit *n*. Valid with virtual routes.
#TMSGS	Selects records with the number of inbound and outbound PIUs exceeding the limit *n*. Valid with virtual routes.
#SESS (or NOSESS)	Graphs average number of concurrent sessions at the end of the collection interval for APPL for each reporting time interval. When selected for a terminal group, lists total number of sessions for each time interval.
#TRANS (or NOTRANS)	Graphs number of transactions for each time interval. Valid with APPL or terminal groups only.
#BYTES (or NOBYTES)	Graphs the number of bytes sent and received for each time interval. The byte count includes the user date plus three bytes for every message sent. Valid with APPL, terminal groups, and TCPIP only.
RBUCKETS	Graphs response time bucket percentages for the four targets specified for each time interval. Valid with APPL or terminal groups only. If both the TARGETS=USER and UTARGETS parameters are specified and you are requesting a vertical report (HBAR is not specified), this parameter graphs all eight targets.
GRBUCKET	Lists response time bucket percentages for the four global targets specified for each time interval. Valid with APPL or terminal groups only.
CCU	Graphs NCP cycle utilization for each time interval. Valid with NCP only.

Parameter	Explanation
UBUF	Graphs NCP buffer utilization for each time interval. Valid with NCP only.
CHQ	Graphs NCP channel hold queue for each time interval. Valid with NCP only.
UTL	Graphs line utilization (for LINE and X25LINE resource types) and TIC utilization (for NTRI resource type) for each time interval.
MSGSM	Graphs messages per minute for each time interval. A message in this case is a single PIU segment. Valid with LINE, CLUSTER, TERMINAL, and CA.
ERRS	Graphs error count for each time interval. Valid with LINE and CLUSTER.
OQLEN	Graphs outbound queue length for each time interval. Valid with LINE, X25LINE, CLUSTER, TERMINAL, CA, and NTRI.
CONGSCNT	Graphs the congestion count for NTRI resource type only.
XDOMAIN	Includes application records for cross-domain applications. The default is to exclude these records. (Cross-domain applications are monitored only when using a session manager.) Valid with APPL only. Exclude cross-domain application records if you have another NetSpy system resident in the cross-domain system that collects data for these applications. This avoids duplicating data.
FORAPPL	Selects terminal records associated with a certain application. You can specify generic character qualifiers on this parameter. Valid with terminal groups only.
BYAPPL	Graphs selected variable by application instead of by time. Valid with terminal groups only. If you use the BYAPPL parameter, the INTERVAL parameter becomes invalid.
VSESSION	Includes virtual session records as well as real session records. To avoid duplication, the default excludes the virtual session records unless you request a report using either the BYAPPL or FORAPPL parameter. Valid with terminal groups only.
LOCAL or REMOTE	Specifies whether the report includes VTAM data on only resources in local major nodes (LOCAL) or only remote resources for NCPs (REMOTE). If you do not specify either LOCAL or REMOTE, VTAM data on both types of resources are included in the report.

Parameter	Explanation
EXCLU62 or ONLYLU62	Specifies whether to include LU 6.2 information: ■ EXCLU62 - Excludes LU 6.2 information ■ ONLYLU62 - Includes only LU 6.2 information Valid with VTAM APPL, LU, LINE, and CLUSTER.
SA (SUBAREA)	Lists statistics for a specific destination subarea in the backbone network. Valid with VR only. Do not precede single-digit numbers with a zero (0).
IFRMM	Graphs the information frames per minute rate for each time interval. Valid for NTRI and X25LINE resource types.
PACKM	Graphs the packets per minute rate for each time interval. Valid only for the X25PU and X25VC resource types.
RTT	Graphs round trip time for each interval. Valid with TCPIP only.
REXMIT	Graphs the retransmitted segment count for each interval. Valid with TCPIP only.
FORIP	Selects TCP/IP records associated with a certain IP address. FORIP allows for generic character qualifiers. Valid with TCPIP only. **Note:** If you use special characters (like the period) the address *must* be enclosed in quotes.
FORPORT	Selects TCP/IP records associated with a certain port ID. FORPORT allows for generic character qualifiers. Valid with TCPIP only.
FORSUB	Selects TCP/IP records associated with a certain subnet. FORSUB allows for an asterisk (*) qualifier to replace a group within an IP address, for example, '*.*.*.*/25'. Valid with TCPIP only. **Note:** If you use special characters (like the period) the address *must* be enclosed in quotes.

The following optional parameters can be used with any resource:

Parameter	Explanation
STARTT	See STARTT
STOPT	See STOPT
STARTD	See STARTD
STOPD	See STOPD
SMFID	See SMFID
NOECHO	See NOECHO
TITLE	See TITLE
EXDAYS	See EXDAYS
PREVDAYS	See PREVDAYS
COMBINED	See COMBINED
INTERVAL	See INTERVAL
BYDAY	See BYDAY
MAX	See MAX
MAX#RPT	See MAXNORPT
MAX#ITVL	Specifies the maximum number of intervals to graph for each report. The default is 100. It is only valid for HBAR reports, and the HBAR keyword must precede the MAX#ITVL keyword in the control statement.
SCALE	Selects a different value for the Y-axis. The default is 100. This number represents tenths of seconds if used for response time. If used as a quantitative measurement, it represents an integer, such as 100 bytes. If a different value is chosen, it should be slightly higher than the range of data values that are to be plotted.
PEAK	Indicates a ceiling value for the resource being plotted. This eliminates extreme peak values that will make the other values seem disproportional.
HBAR	Requests that a horizontal bar graph be produced instead of the default vertical bar graph. The values as well as the graph are shown.

Sample Reports

This section contains samples of batch reports. The particular control statements used to generate each report appears at the top of the page with the report.

See the appendix entitled "Report and Display Headings" for an alphabetical listing of column headings and explanations.

```
  PRINT    X25PU=XP0564   PACKM>100
12MAR2001 MON 15:43:49            N E T S P Y   N E T W O R K   P E R F O R M A N C E   R E P O R T              PAGE 1
RESOURCE NCP    SNDPAC  RCVPAC   # VC  # NEW  OUTB  INB   OUTB  INB  #INN-SHM        RNR
NAME     INTVL    /MIN    /MIN   CONN   CONN  CONN  CONN  DCON  DCON   RECONN    SENT   RECV
-----------------------------------------------------------------------------------------------------------------------
XP0564   10.6M     249      79     15      0     0     0     0     0        0       0      0          12MAR2001  09:00:06
XP0564   15.0M     210      63     15      0     0     0     0     0        0       0      0          12MAR2001  09:15:02
XP0564   15.0M     263      80     15      0     0     0     0     0        0       0      0          12MAR2001  09:30:05
XP0564   15.0M     243      85     15      0     0     0     0     0        0       0      0          12MAR2001  09:45:05
XP0564   15.0M     269     147     15      0     0     0     0     0        0       0      0          12MAR2001  10:00:08
XP0564   15.0M     264     140     15      0     0     0     0     0        0       0      0          12MAR2001  10:15:08
XP0564   15.0M     324     108     15      0     0     0     0     0        0       0      0          12MAR2001  10:30:06
XP0564   15.0M     268      93     15      0     0     0     0     0        0       0      0          12MAR2001  10:45:05
XP0564   15.0M     270      81     15      0     0     0     0     0        0       0      0          12MAR2001  11:00:04
XP0564   15.0M     276      84     15      0     0     0     0     0        0       0      0          12MAR2001  11:15:06
XP0564   15.0M     226      74     15      0     0     0     0     0        0       0      0          12MAR2001  11:30:08
XP0564   11.9M     221      65     15      0     0     0     0     0        0       0      0          12MAR2001  11:46:00
XP0564    3.4M     177      61     14      0     0     0     0     0        0       0      0          12MAR2001  11:30:09
XP0564   11.4M     338      66     11      0     0     0     0     0        0       0      0          12MAR2001  09:30:21
XP0564   15.0M     292      58     11      0     0     0     0     0        0       0      0          12MAR2001  09:45:11
XP0564   15.0M     313      57     11      0     0     0     0     0        0       0      0          12MAR2001  10:00:09
XP0564   14.9M     417      70     11      0     0     0     0     0        0       0      0          12MAR2001  10:15:03
```

```
  SMF#=132
  SUMMARY  X25LINE=L0564 ALLUTL INTERVAL=MINS(60)
12MAR2001 MON 12:04:22            N E T S P Y   N E T W O R K   P E R F O R M A N C E   R E P O R T                PAGE 1
                 RESOURCE    NCP PRIM SEC. SNDIFR RCVIFR TTLIFR SNDBYTE  RCVBYTE  TTLBYTE       RR         RNR    OUTQ RTRN RTRN
                 NAME      INTVL UTL% UTL%   /MIN   /MIN   /MIN    /SEC     /SEC     /SEC   SENT   RECV SENT RECV  LEN IFR% BYT%
-----------------------------------------------------------------------------------------------------------------------
 12MAR2001 08:00  L0564     10.6M   27    3    328    196    524     639       83      722   1643   3363    0    1    0    0    0
           09:00  L0564     60.0M   26    5    339    206    545     626      113      740   2356   4938    0    0    0    0    0
           10:00  L0564      1.0H   29    6    384    236    620     695      137      832   2753   5633    0    0    1    0    0
           11:00  L0564     42.0M   26    3    317    188    505     616       80      696   2097   4363    0    0    0    0    0
           14:00  L0564     22.7M    0    0      1      1      2       3        0        3     20     26    0    0    0    0    0
           15:00  L0564     49.7M    3    1     43     27     70      78       18       96    361    570    0    0    0    0    0
           16:00  L0564     14.8M    4    1     51     30     81      99       13      112    499    805    0    0    0    0    0
```

```
  SUMMARY  X25PU=XP0564  ALLUTL INTERVAL=MINS(60)
12MAR2001 MON 12:04:22            N E T S P Y   N E T W O R K   P E R F O R M A N C E   R E P O R T                PAGE 1
                 RESOURCE    NCP   SNDPAC   RCVPAC   TTLPAC   # VC   #NEW   OUTB   INB    OUTB   INB   #INN-SHM        RNR
                 NAME      INTVL     /MIN     /MIN     /MIN   CONN   CONN   CONN   CONN   DCON   DCON   RECONN     SENT   RECV
-----------------------------------------------------------------------------------------------------------------------
 12MAR2001 08:00  XP0564    10.6M      249       79      329     15      0      0      0      0      0        0       0      0
           09:00  XP0564    60.0M      246       94      340     15      0      0      0      0      0        0       0      0
           10:00  XP0564     1.0H      281      106      387     15      0      0      0      0      0        0       0      0
           11:00  XP0564    42.0M      242       75      318     15      0      0      0      0      0        0       0      0
           14:00  XP0564    22.7M        1        0        1      9      0      0      0      0      0        0       0      0
           15:00  XP0564    49.7M       31       13       44     10      1      0      0      0      0        0       0      0
           16:00  XP0564    14.8M       39       12       51     10      1      0      0      0      0        0       0      0
```

```
   SMF#=132
   GRAPH    X25LINE=L0575  IFRMM  INTERVAL=MINS(60)
16MAR2001 FRI 12:05:32          N E T S P Y   N E T W O R K   P E R F O R M A N C E   R E P O R T             PAGE 1
I-FRAMES PER MINUTE (AVERAGE)
                          X.25 MCH LINE=L0575     FIRSTDATE: 15MAR2001 THU   LASTDATE: 15MAR2001 THU
          300  +
               ]
               ]
               ]
          270  +
               ]                            ****
               ]                            ****
               ]                            ****
          240  +                            ****
               ]                            ****
               ]                            ****
               ]                            ****
          210  +                            ****
               ]                            ****
               ]                            ****
               ]                            ****
          180  +                            ****
               ]                            ****
               ]                            ****
               ]                            ****
          150  +              ****          ****
               ]              ****          ****
               ]              ****          ****
               ]              ****          ****
          120  +              ****          ****
               ]              ****          ****
               ]              ****          ****
               ]              ****          ****
           90  +              ****          ****
               ]              ****          ****
               ]              ****          ****
               ]              ****          ****
           60  +          **** ****          ****
               ]          **** ****      **** ****
               ]          **** ****      **** ****
               ]     **** **** **** **** **** ****
           30  +     **** **** **** **** **** ****
               ]     **** **** **** **** **** ****
               ]     **** **** **** **** **** ****
               ]     **** **** **** **** **** ****
                +----+----+----+----+----+----+-------------------------------------------------------------
                0    0    1    1    1    1    1
                8    9    0    1    4    5    6
                :    :    :    :    :    :    :
                0    0    0    0    0    0    0
                0    0    0    0    0    0    0
 THE AVERAGE VALUE IS      76; THE HIGHEST VALUE IS     265, ON 15MAR2001 THU 16:00:00.
```

Sample Batch Control Statements

This section shows you sample batch control statements used to generate NetSpy batch reports.

Sample JCL for the Batch Reports

This section shows you sample JCL to use with the batch control statements in producing NetSpy's batch reports. This JCL is in the REPORTS member of the NETSPY.CNTL data set. The control statements you are using for the reports should be included in the JCL immediately following the //RPRTCNTL DD statement.

Note: Remember to sort the data when you are not sure if the records are in date-time sequence (for example, when merging two or more files or when using the Log files). Also, if you receive erratic data in your report, sort the files.

```
//SPYREPS  JOB 1,NS-REPORTS,CLASS=A,MSGCLASS=H
//*******************************************************************
//* IF YOU ARE RUNNING THIS JOB WITH TAPE INPUT, WE STRONGLY         *
//* RECOMMEND THAT YOU STRIP OFF THE NETSPY RECORDS INTO A           *
//* TEMPORARY DATA SET. IT WILL REDUCE RUNNING TIME SIGNIFICANTLY.   *
//*                                                                  *
//* SMF DATA INPUT TO THIS JOB SHOULD HAVE BEEN DUMPED FROM THE LIVE *
//* SMF DATA SETS TO A SEQUENTIAL FILE ON DISK OR TAPE.              *
//* (USE JOB SMFDUMP IF NECESSARY)                                   *
//*                                                                  *
//* THE SORT STEP IS NEEDED ONLY WHEN YOU ARE NOT CERTAIN IF THE     *
//* NETSPY RECORDS ARE IN DATE-TIME SEQUENCE. (E.G. WHEN MERGING DATA *
//* FROM TWO OR MORE FILES, OR WHEN USING THE NETSPY LOG FILES)      *
//*                                                                  *
//* IT IS RECOMMENDED THAT YOU SORT THE DATA IF YOU ARE GETTING      *
//* ERRATIC RESULTS WITH A REPORT SINCE EVEN THE SMF DATA FOR A      *
//* SINGLE SYSTEM CAN BE WRITTEN TO TAPE OUT OF SEQUENCE.            *
//*******************************************************************
//SORTSMF  EXEC PGM=SORT,REGION=4000K
//SORTLIB  DD DISP=SHR,DSN=SYS1.SORTLIB       <--- SORT SYSTEM LIB
//SORTWK01 DD UNIT=SYSDA,SPACE=(CYL,(20,20))
//SORTWK02 DD UNIT=SYSDA,SPACE=(CYL,(20,20))
//SORTWK03 DD UNIT=SYSDA,SPACE=(CYL,(20,20))
//SORTWK04 DD UNIT=SYSDA,SPACE=(CYL,(20,20))
//SORTIN   DD DISP=SHR,DSN=SMF.HOST1.DATA     <--- SMF OR NETSPY LOG DATA
//         DD DISP=SHR,DSN=SMF.HOST2.DATA     <--- SMF OR NETSPY LOG DATA
//SORTOUT  DD DSN=&&NSYSMF,
//            UNIT=SYSDA,
//            SPACE=(CYL,(50,20),RLSE),
//            DISP=(NEW,PASS)
//SYSPRINT DD SYSOUT=*
//SYSOUT   DD SYSOUT=*
//SYSIN    DD *
 INCLUDE COND=(6,1,FI,EQ,132)  <--- INCLUDE ONLY NETSPY REC (SMF#=132)
 SORT FIELDS=(11,4,BI,A,7,4,BI,A)
 END
/*
//*******************************************************************
//* THE REPORT STEP READS THE CONTROL STATEMENTS YOU PROVIDE AND     *
//* PRODUCES THE REPORTS AS REQUESTED.                               *
//*                                                                  *
```

```
//* THE SMFDATA DD POINTS TO THE LOG DATA, I.E. INPUT DATA.           *
//* (USE &&NSYSMF WHEN SORTING SMF DATA.)                             *
//*                                                                   *
//* IF YOU WANT REPORTS FOR A PARTICULAR SYSTEM, USE THE "SMFID="     *
//* PARAMETER ON THE CONTROL STATEMENTS BELOW.  OTHERWISE, YOU WILL   *
//* RECEIVE REPORTS FOR ALL SYSTEMS.                                  *
//*********************************************************************
//REPORT   EXEC PGM=NSYRPRT,REGION=4000K
//STEPLIB  DD DISP=SHR,DSN=NETSPY.LOADLIB
//SMFDATA  DD DISP=(OLD,DELETE),DSN=&&NSYSMF  <--- LOG DATA
//NCPSRC   DD DISP=SHR,DSN=SYS1.VTAMLST       <--- REPLACE PDS NAME
//RSCPARM  DD DISP=SHR,DSN=NETSPY.CNTL        <--- NETSPY RESOURCE FILE
//SYSPRINT DD SYSOUT=*
//SYSUDUMP DD SYSOUT=*
//RPRTPRT  DD SYSOUT=*
//TARGETS  DD SYSOUT=*      <--- REMOVE THIS DD IF YOU DO NOT WANT A
//ABNLIGNR DD DUMMY              LIST OF APPLICATION RESPONSE TARGETS
//RPRTCNTL DD *
/*
```

Appendix

A

Report and Display Headings

This appendix explains the headings found on NetSpy displays, online reports, and batch reports.

Table Key for Report and Display Headings

The headings are listed in alphabetical order for easy reference; headings beginning with # and % are placed at the end. You will find that some of the headings have identical explanations but are spelled differently because of varying space restrictions on the reports and displays.

Notation for Network Response Times

The following information on *network response times* applies to all entries describing average, last, and worse response times:

A "B" appended to the network response time (average, last, and worst) indicates that this is a bisynchronous terminal and NetSpy used its VTAM and NCP statistics to calculate the bid-to-poll delay. This delay was then added to the measured network times.

A "C" appended to the average network time indicates that there were not enough measurements of network time to provide a reliable figure, so NetSpy calculated an average for the current interval based on its VTAM and NCP statistics.

Heading	Description
ADJ NOD	Number of adjacent nodes in a different sub-network.
ACT EXTS	The current number of active extents in VTAM buffer pool.
ACTIVE OPENS	Number of active opens that have been supported by the instance of TCP/IP.
ALERT COUNT	Number of alerts that have occurred since NetSpy began monitoring the resources.
ALERT PERCENT	The percentage of intervals during the entire monitoring time span in which at least one alert occurred. For example, if fifty intervals have passed and one or more alerts occurred during 25 of those intervals, the alert percentage would be 50%.
ALERT DESTINATIONS	Where NetSpy has sent data on the alert.
ALLOC PCT	The percentage of the copy request parameter lists (CRPLs) in use that are allocated to this JOB NAME. To the right of the ALLOC PCT field is a graphical representation of the percentage figure with a range from 0-100.
APPLICATION	Limits any terminal display to terminals currently in session with the entered application.
APPLICATION-DESIGN-ISSUES NULLRUS MIDOUTDR NRSTMDT	States inefficiency in an application that NetSpy has identified leading to poor response times. Values for application design issues include the following inefficiencies: *NULLRUS* NULL WRITES ISSUED *MIDOUTDR* DR NOT LAST WRITE *NRSTMDT* MDT NOT RESET An "X" under one or more of these headings indicates an inefficiency of that type.
APPLICATION NAME	Application program name.
APPL NAME	ACBNAME or real VTAM name for the application being monitored.
ATTN	The total number of attentions received from a controller, including the total number of read attentions (RDATN).
ATTNS/MIN	Number of times/minutes an attention interrupt was presented to the host in order for the host to issue a channel read.
AVG HOST RESPONSE or AVG HOST or AVG-RSP HOST	Average response time of the host for the specified time interval.
AVG RESP	Average network response time for the measured interval.
AVG-RESP HOST NET	Average response time of both the host and the network for the specified time interval.

Heading	Description
AVG-RESP HOST NET USER	Average response time of the host, network, and user for the specified time interval.
AVG WDW	Average number of PIUs sent before a pacing response is requested.
BASE ALLO	Number of buffers allocated at VTAM initialization.
BCK-PRESSURE-APPLD: HPRSW	Number of times that back pressure has been applied due to HPR path switch.
BCK-PRESSURE-APPLD: QDPTH	Number of time back pressure has been applied queue depth exceeded.
BCK-PRESSURE-APPLD: STRGSH	Number of times back pressure applied due to storage shortage.
BLOCKS IN USE	Percentage of coupling facility structure 1K blocks in use.
BSIZE	The maximum buffer size supported by this subchannel.
BTP	Bid-to-poll delay, the amount of time the message stays in the cluster controller waiting for it to be polled.
BUFCAP	The number of times a channel program was initiated because there was enough data to fill the read buffers of the host on the other end of the channel. If this event never happens (BUFCAP is always zero), the other host has too many read buffers. This parameter is related to CHMAX in tuning statistics for the other host, as well as the normal and maximum number of buffers for the other host.
BUFFER-SIZE SEND	The TCP/IP send buffer size in bytes.
BUFFER-SIZE RECEIVE	The TCP/IP receive buffer size in bytes.
BUFFER UTL%	NCP buffer utilization for the specified time interval.
BUFF NAME	The name of a VTAM fixed buffer pool.
BUFF SIZE	The size of the VTAM buffer pool entry.
BUFFS IN USE	Number of buffers from the NCP buffer pool currently being used for dynamic control blocks.
BYTECNT	Represents the accumulated number of bytes sent for WRITE subchannels and received for READ subchannels.
BYTECNTO	The number of times the byte counter has exceeded the overflow threshold (9,999,999,999). When this happens, the BYTECNTO value is reset to 0, and the byte count overflow is incremented. You can determine the total number of bytes sent/received using this formula: (BYTECNTO x 9,999,999,999) + BYTECNT

Heading	Description
BYTES SENT	The total number of bytes sent. For the TCP/IP monitor, the number of bytes sent to IP for the connection.
BYTE SENT or BYTES/SEC SENT	Bytes sent per second.
BYTES: SENT	Number of bytes sent over the RTP.
BYTES: RCVD	Number of bytes received over the RTP.
BYTES RECEIVED	For the TCP/IP monitor, the number of bytes received from IP for the connection.
BYTES RECVD or BYTES RCVD	The total number of bytes received.
BYTE RECV or BYTES/SEC RECV	Bytes received per second.
BYTES/SEC or BYTE/S	Bytes per second, sent and received. The byte count includes the transmission header (TH) and request header (RH) for all devices. If the device is a line or cluster, polling bytes and frame characters are also included.
BYTEI/S or BYTE IN/SEC	Inbound bytes per second for the cluster or line.
BYTEO/S or BYTE OUT/SEC	Outbound bytes per second for the cluster or line.
BYTE THRESHOLD or BYTE THRES or BTH	Byte threshold to reach in the NCP when collecting accounting data before a session interval record will be written (sent to the host).
CACHE DIS or CACHE ENTRIES DISCARDED	Number of times a cache entry is discarded due to DIRSIZE maximum being reached.
CACHE ENTRIES	Current number of entries in the cache.
CACHE NEG	Number of times a network broadcast is not performed due to a negative cache entry.
CCU	NCP cycle utilization for the specified time interval.
CF SIZE	Coupling facility structure size in 1K blocks.
CHANNEL-HOLD-Q or CHANL HOLDQ	The channel hold queue length, the number of messages sent to the host but not yet acknowledged.
CHANL INT-Q	Channel intermediate queue length, that is, the number of messages queued in the NCP waiting to be sent to the host.
CHMAX	The number of maximum-sized channel programs that have completed. If this number is zero, it may mean that you have too many buffers specified for MAXBFRU (normal), so that time is being wasted formatting read buffers that are never used. If this number is high in relation to CHNRM, you should increase the value for

Heading	Description
	MAXBRFU (normal). **Note:** If the CTCA is 3088-attached, the value of CHMAX is zero.
CHNRM	The number of normal-sized channel programs that VTAM has used to send data to the VTAM on the other side of the adapter. This value relates to the MAXBFRU values specified for the other VTAM.
CHQ	The channel hold queue length, the number of messages sent to the host but not yet acknowledged.
CHRD	The total number of read channel programs issued, except those that result in a "dummy" read. A dummy read is one performed only to determine the length of the data that a cluster controller wants to send.
CHWR	The total number of write channel programs issued during the interval covered by this period.
CIQ	Channel intermediate queue length, the number of messages queued in the NCP waiting to be sent to the host.
CLUSTER	Name of the cluster for which data is reported.
COLL ITVL	Amount of time the NCP has been collecting statistics.
COLL#	Number of resources in this NCP for which data collection is being performed.
COLLISIONS ONE	Number of single collisions.
COLLISIONS ONE	Number of multiple collisions.
COMBINED	All resources matching the generic name qualifier are combined into one report.
CONG CNT or CONGST CNT	The resource's congestion count.
CONGESTION FORWD	Congestion count forward.
CONGESTION BACK	Congestion count backward.
CONNECTIONS: ENODS	Number of end nodes connected to this node.
CONNECTIONS: NNODS	Number of network nodes connected to this node.
CONNECTIONS: VNODS	Number of virtual nodes connected to this node.
COUPLING FACILITY or COUPL_FCLTY_ STRUCT NAME	Name of the coupling facility structure.
COUPLING FACILITY: BYTES	Number of bytes written to the coupling facility structure.
COUPLING FACILITY SIZE	Coupling facility structure size in 1K blocks.
COUPLING FACILITY: WRITES	Number of coupling facility writes for this application.

Heading	Description
COUPLING FACILITY %USE	Percentage of coupling facility structure 1K blocks in use.
CURRENT IN USE	Percentage of all control blocks currently in use for the pool.
CUR STAT	The current status of the virtual route: **OPEN** The virtual route is open. **HELD** A VR pacing request has been sent but a response has not yet been received. The number of PIUs transmitted to the receiver is one window. Additional PIUs may be "held" in the VR hold queue. **BLKD** A VR pacing request has been sent but a response has not yet been received. The number of PIUs transmitted to the receiver is one window. An additional window of PIUs is "held" in the VR hold queue and VTAM will take actions to limit the acceptance of data using the blocked virtual route. **INAC** A virtual route for which NetSpy detected traffic on since the start of monitoring has become inactive.
CUR WDW	Current virtual route window size.
CYCLE UTL%	NCP cycle utilization for the specified time interval.
DATE	Date on which the alert occurred.
DB	Data is being logged to the NetSpy Datacom database.
DEST SUBA	Number of the NCP subarea or host subarea other than the origin subarea.
DIRECTION	Either READ or WRITE, indicating the dedicated direction of the subchannel. Subchannels have a dedicated direction so that the MPC group can operate in full-duplex mode and reduce overhead.
DISCARD FRAMES	Number of I-frames discarded during the interval.
DSCARD PDU	The total number of discarded PDUs.
DUP ACK	Number of duplicate ACKs received for the connection.
DYNAMIC PU ALLOCATIONS	Number of dynamic PU allocations.
ELEMENT NAME	Element name, name of the current entry.
ENCR	An encryption indicator.
ENTRIES IN CACHE	Current number of entries in the cache.

Heading	Description
ERROR	Error count for a particular line or cluster in the specified time interval.
ERROR COUNT	Error count for a particular line or cluster during the specified time interval.
ERROR FRAMES	Number of error frames. For TIC3LINK resources, the sum of misaddressed, discarded, and unrecognized frames. For TIC3PU resources, the total number of rejected frames sent and received.
ERROR SEGMENTS	Total number of segments received in error.
ERRS or ERRORS ON LINE OR CLUSTER	Error count for the cluster and line during the specified time interval.
FAILED OPENS	Number of failed connection attempts that have occurred for the instance of TCP/IP.
FB	The current percentage of free buffers.
FBH	The high water mark percentage of free buffers.
FBL	The low water mark percentage of free buffers. It also gives the lowest number of free buffers.
FEP	Front-end processing time, the amount of time the NCP takes to process the message.
FIRSTDATE	The first date on which NetSpy collected statistics for this particular report.
FIRST OVERFLOW	The date and time when the first control block overflow happened
FORAPPL	Specifies that terminal records associated with this particular application are to be selected. On Global and User Alert Displays, the name of the application with which the LU is in session.
FORLINE	Name of the line on which the LU is located.
FORPU	Name of the PU on which the LU is located.
FRAMES DISCRD	The number of I-frames discarded during the indicated time interval.
FREE-BUFFER-QUEUE% CURRENT HIGH LOW	The current, high water mark, and low water mark percentage of free buffers.
FREE-BUFFER-QUEUE-LENGTH CURRENT HIGH LOW MAX	The current, high, low, and maximum number of free buffers.
GWA-ON	Gateway session accounting has been turned on for this NCP and is recording data. (Supported in NCP Versions 4.3.1 and 5.2.1.)
HIGH PRIORITY	The traffic type.

Heading	Description
HIGH WATER MARK	The highest usage of the control block.
H-RSP	Response time of the host for this traced transaction.
HOST	The specified threshold in tenths of seconds for host response time. If this field is blank, no threshold was specified.
HOST RESP	Host response time for this transaction.
IFRMM SENT	Number of I-frames sent per minute.
IFRMM RECV	Number of I-frames received per minute.
IFRMS/MIN	The average number of I-frames transferred during each minute of the interval.
IFR-MSG/MIN	Information frames per minute for X.25 multi-channel lines or messages per minute for X.25 logical units.
INB CONN	Number of inbound connections (incoming call packets).
INB DCON	Number of inbound disconnections (clear request packets).
INBOUND	Inbound transmission delay.
INPUT SIZE	The average input (transaction) size, in bytes, for a particular application.
IN-SESS APPLNAME	The name of the application with which the specified terminal is in session.
INTERVAL or INTERVL	The time during which the NCP has collected data for a particular resource.
INTVL	The length of the interval in minutes.
IPIU	The total number of inbound (to VTAM) PIUs received. On the Tuning Statistics Display for Channel-to-Channel Adapters, this number is calculated as IPIU/(CHNRM+CHMAX).
INBOUND-PIUS COUNT SIZE	Inbound PIUs seen by NetSpy for a virtual route. Number of PIUs and average size.
ITVL COUNT	Number of intervals that have passed since NetSpy began monitoring the resources.
IXT	Inbound transit time, the amount of time it takes for the message to go from the cluster controller to the NCP.
LASTDATE	The last date on which NetSpy collected statistics for this particular report.
LAST-RESP HOST NET	Last response time for the most recently completed transaction during this interval for both the host and network. Not valid when a

Heading	Description
	transaction is in progress.
LAST TOUCHED	The number of hours, minutes, seconds since the connection was last used.
LINE NAME	Name of the line for which data is reported.
LINE UTILIZATION	Primary and secondary lines with percentage utilization greater than the value entered.
LINE UTL	Line utilization. This is the percentage of the total capacity of the line being used for outbound data only.
LINE UTIL PRI SEC	Percentage of primary and secondary X.25 multi-channel line utilization.
LINE/PU ERRORS	Clusters or lines having an error count greater than the value entered.
LIST TYPE	Whether the resource list includes or excludes the displayed resources.
LOCAL BUSY	Number of local busy occurrences.
LOG	Data is being logged to the Log.
LOW PRIORITY	The traffic type.
LU-LU SESS	Number of active LU-LU sessions using the RTP.
LUNAME or LU	VTAM name for a secondary logical unit (terminal or application).
MAJNODE	The VTAM CTCA major node containing the MPC line definition.
MAX ALLO	Maximum number of buffers allocated since the last SMS record was written.
MAXBYTES	The number of bytes contained in the largest channel program. Compare this value with the value for BSIZE to determine how effectively buffers are being used. These two values should be close.
MAX BUF IN USE	Maximum number of buffers from the NCP buffer pool used for dynamic control blocks for the pool and interval.
MAXCOLL#	Maximum number of resources in a particular NCP for which data could be collected concurrently.
MAX CONNECTIONS	Limit on the total number of connections the instance of TCP/IP can support.
MAXIMUM DYNAMIC	Maximum percentage of dynamic control blocks used for the pool and interval.
MAXIMUM IN USE	Maximum percentage of all control blocks in use for the pool and interval.

Heading	Description
MAX USED	Maximum number of buffers in use at one time since the last SMS record was written.
MAX VALUE	The value specified or defaulted for the parameter in the initialization parameters.
MAX WDW	Largest virtual route window size observed during the current interval.
MEASURED PIUS	Number of PIUs sampled by NetSpy to measure the network delays in a virtual route.
MEDIUM PRIORITY	The traffic type.
MESSAGES/MIN	Specifies that only resources having message traffic rate greater than the value entered will be displayed.
MESSAGES RECVD	Total number of messages received.
MESSAGES SENT	Total number of messages sent.
MIN BUF IN USE	Minimum percentage of dynamic control blocks used for the pool and interval.
MINIMUM IN USE	Minimum percentage of all control blocks in use for the pool and interval.
MIN WDW	Smallest virtual route size observed during the current interval.
MODE	The current tracing mode: NORMAL, INTENSIVE, or INACTIVE.
MONITOR	A YES or NO value indicates whether or not the particular resource is being monitored by NetSpy. N/A indicates that monitoring is not supported by NPA.
MONITOR ITVL(SEC)	Monitor interval in seconds.
MONITOR NAME	Name of a monitor.
MESSAGES PER MINUTE MSG/M or MSG/MIN	Messages per minute for a particular line, cluster, or terminal.
MSGI/M or MSG IN/MIN	Inbound messages per minute for a particular line or cluster.
MSGO/M or MSG OUT/MIN	Outbound messages per minute for a particular line or cluster.
NAME	Name of a line, cluster, or terminal. On the Trace Status Display for Applications, the application name specified on the APPL statement in the INITPRM member or file. On the Trace Status Display for LUs, the name or prefix of the single terminal or group of terminals.

Heading	Description
NCP INTERVAL	The time during which the NCP has collected data for a particular resource.
NET	The specified threshold in tenths of seconds for network response time. If this field is blank, no threshold was specified.
NETACCT	Network session accounting.
NETID	The 8-byte network ID of the logical unit. On the NetSpy Terminal Response Time Analysis screen, this field will have a value only for ESA environments. Otherwise, it will be blank.
NETSPY	In alert displays, identifies which NetSpy issued the alert. In real-time and historical displays, indicates which NetSpy's data is included in the report.
NETSPY NAME	NSYNAME or NSYXNAME name of the NetSpy where the monitor was executed. The NSYXNAME name is specified on the NSYXNAME statement in the INITPRM member or file. In real-time and historical menus, indicates which NetSpy's data you want to include in the report. The name represents the name specified on the NSYXNAME parameter in INITPRM for that NetSpy.
NETWORK BROADCAST NOT PERFORMED	Number of times a network broadcast is not performed due to a negative cache entry.
NO. INPUT	The number of inputs (transactions) during the specified interval.
NO. NETRESP	The number of transactions that have used definite response to enable NetSpy to compute the network response time.
NO. OUTPUT or NUMBER OUTP	The number of application writes for the specified interval.
NO. SESS	Number of concurrent sessions for the specified time interval. With the SUMMARY and GRAPH statements, this is an *average* number at the end of the interval when selected for an application and a *total* number when selected for a terminal.
NO. TRANS or NUMBER TR	Number of transactions: **For non-LU 6.2 sessions:** The number of transactions measured for response time. **For LU 6.2 sessions:** The number of conversations started (attaches).
NODENAME	The NCP node, entered either as an asterisk (*) indicating all nodes, or as a valid NCP resource name (NCP, line, cluster, or terminal).
NOTACQ	Network accounting is not turned on for this NCP because its NPALU is not in session with NetSpy.

Heading	Description
NSA-ON	Network session accounting has been turned on for this NCP and is recording data. (Supported in NCP Versions 4.3 and 5.2)
NSYLOG	Data is being logged to the Log.
N/A	Network accounting is not applicable for this NCP because SESSACC or GWSESAC has not been specified in the NCP gen.
N-RSP	Response time of the network for this traced transaction.
OFF	Network accounting has never been turned on for this NCP or it has been turned off.
OPIU	The total number of outbound (from VTAM) PIUs sent.
OQLN	Outbound queue length, number of messages queued to be output, for a particular cluster and line.
ORIG SUBA	Number of the host subarea.
OUTBOUND PIUS COUNT SIZE	Outbound PIUs seen by NetSpy for a virtual route Number of PIUs and average size
OUTPT SIZET or OUTPUT SIZET or OUTPUT SIZE/T	The average output size, in bytes, per transaction.
OUTPT SIZEW or OUTPUT SIZEW or OUTPUT SIZE/W	The average output size, in bytes, per write.
OUTBOUND	Outbound transmission delay.
OUTB CONN	Number of outbound connections (call request packets).
OUTB DCON	Number of outbound disconnections (clear request packets).
OUT-BYTES PER PIU	Number of outbound bytes per measured PIU.
OUTPUT WAIT	The amount of time elapsed since the currently executing transaction arrived at the host.
OUT-Q LNGTH or OUT-Q-LEN or OUT QLEN or QLEN	Outbound queue length, number of messages queued to be output, for a particular resource within the NCP.
OUT “Q” LENGTH	Specifies that only resources having an outbound queue length greater than the value entered will be displayed.
OVERALL MAXIMUM	Percentage of all control blocks for the pool in use since NCP initialization.
OV EXP POINT	Number of available buffers over the expansion point for the named pool

Heading	Description
OVERFLOW COUNT	The sum of the number of times NetSpy has tried to acquire the control block elements but could not.
OV SLO POINT	Number of available buffers over the slow point for the named pool
OXT	Outbound transit time, the amount of time it takes for the message to get to the cluster controller.
PACKETS/MIN	The number of packets per minute for X.25 MCH PUs and X.25 virtual circuits (VCs).
PASSIVE OPENS	Number of passive opens that have been supported by the instance of TCP/IP.
PATH-SWITCH-ATTEMPTS: LNFLR SUC	Number of HPR path switch attempts due to any other failure (such as link failure or node failure) and percentage that were successful.
PATH-SWITCH-ATTEMPTS: OPCMD SUC	Number of HPR path switch attempts due to operator or VTAM command and percentage that were successful.
PATH-SWITCH-ATTEMPTS: OTHER RTP ENDPOINT	Number of HPR path switch attempts initiated by other RTP endpoint.
PERCENT-RESP-ON-TARGET 1 2 3 4 %OVER	The percentage of all transactions that met each of the four defined response time target values, and the percentage that exceeded the #4 target.
PDU/MIN SENT	Number of PDUs sent per minute.
PDU/MIN RECV	Number of PDUs received per minute.
PERMNT # GEN	The number of permanently assigned control blocks from the system generation.
PIPES_RECOVERIES: SUCCES	Number of HPR pipes recovered successfully by this VTAM.
PIPES_RECOVERIES: ATTEMPT	Number of HPR pipes recoveries attempted by this VTAM.
PIUDIST	Defines up to 6 PIU size ranges in order to collect PIU size counters for a network accounting session. (Supported in NCP Versions 4.3.1 and 5.2.1.)
PIUS OUT	The total number of outbound PIUs from a VTAM application in the same subarea as NetSpy.
PIU SEG./MINUTE	Average number of messages (PIU segments) sent to device per minute.
PIUSSEG: SNT	Number of PIUs that were segmented sent over the RTP.
PIUSSEG: RCV	Number of PIUs that were segmented received over the RTP.
PIU THRESHOLD or PIU THRES or PTH	Byte threshold to reach in the NCP when collecting accounting data before a session interval record will be written (sent to the host).

Heading	Description
PLNU or PRI LINE	Primary line utilization, available only for lines for which you have specified a line speed in the NCP generation. This field indicates the following: ■ In real-time displays and print reports, the percentage of the total capacity of the line being used for a half-duplex line or the percentage of the send line for a full-duplex line. ■ In summary reports, the percentage of the capacity of the line used to send outbound messages for a half-duplex line or a full-duplex line.
POLL	Polling delay.
POLL/MIN or POLLS/MIN or POLL/M	Number of polls per minute for a particular cluster or line.
POOL NAME	The three-letter control block identifier.
POOL SIZE	The initial size of the pool.
PORTID	A 16-bit number used in the Internet suite to communicate between TCP or the UDP (User Datagram Protocol) and a higher level protocol or application.
POS. ATN%	Percentage of the number of reads divided by the number of attentions.
PPOLL% or %POS POLL or POS. PLL%	Percentage of polls answered with data.
PRI	The number of times a channel program was started because a high priority PIU was on the outbound channel queue; the PIU was running under transmission priority 2 or was a virtual route pacing response. If this number is high and there is very little transmission priority 2 traffic over this channel, then the minimum virtual route window sizes are probably too small. The higher this number is in relation to the sum of TIMERS + QDPTH + BUFCAP, the less outbound coat tailing occurs and the more CPU time is used per PIU.
PRIM UTL%	Primary line utilization, available only for lines for which you have specified a line speed in the NCP generation. This field indicates the following: ■ In real-time displays and print reports, the percentage of the total capacity of the line being used for a half-duplex line or the percentage of the send line for a full-duplex line. ■ In summary reports, the percentage of the capacity of the line used to send outbound messages for a half-duplex line or a full-duplex line.

Heading	Description
PUNAME	RTP physical unit.
QDPTH	The number of times a channel program was initiated because the queue limit has been reached. This number should be higher than TIMERS.
QSWEEP	The number of sweeps issued due to excessive receive queue depth. Excessive read queue depth usually indicates a problem with reserialization of a data segment. Possible causes include a mismatch in the speed of the read subchannels or a lack of available I/O buffers. A sweep is a special data block that is exchanged with the adjacent host to verify that data has not been lost for the MPC group.
RCVBYTE/SEC	Inbound bytes per second for a particular cluster or line.
RCVD SEGMENTS	Total number of segments received, including those received in error.
RCVMSG/MIN	Inbound messages per minute for a particular line or cluster.
RCVIFR/MIN	Number of information frames received per minute.
RCVPAC/MIN	Number of packets received per minute.
RDATN	The total number of times that the attention was included in the ending status on a read channel program. That is, the number of times that VTAM, after reading data, was requested with an attention to read more data.
RDBUF	The total number of VTAM buffers used for read operations
READ %	The percentage of READ start I/Os issued on a particular subchannel. This can help you determine how well the load is balanced across the READ subchannels.
READS	The total number of READ start I/Os issued for the MPC group.
RECOVERY %SUCCESS: HPR PIPES	Percentage of HPR pipes recovered successfully by this VTAM.
RECOVERY %SUCCESS: SESSIONS	Percentage of sessions recovered successfully by this VTAM.
RECOVERY TIME	Total recovery time spent recovering sessions (TOD clock format).
REFER RECVD	Number of referrals received.
REJECT PDU	Total number of rejected PDUs.
REMOTE: CP	Remote CP name.
REMOTE IP ADDRESS	The 32-bit address defined by the Internet Protocol.
REMOTE: NETID	Remote network ID.

Heading	Description
REPLIES: POSITV	Number of times a positive reply is received from an alternate central directory server.
REPLIES: NEGATV	Number of times a negative reply is received from an alternate central directory server.
RESOURCE	The line name defined during VTAM CTCA definition processing for the MPC group
RESOURCE NAME	On NCP statistic reports, name of the particular NCP resource for which data is reported. On the Monitor Status Display, the name of the resource being monitored. On Global and User Alerts Displays, the name of the resource for which the alert occurred.
RESOURCES FOUND: LOC-DB	Number of resources successfully found in local database cache.
RESOURCES FOUND: CDS	Number of resources successfully found from the central directory server.
RESOURCES FOUND: DOM-BC	Number of resources successfully found via domain broadcast.
RESOURCES FOUND: NET-BC	Number of resources successfully found via network broadcast.
RESOURCES: REGST	Number of registered resources.
RESOURCES: REMOVED	Number of resources removed from the local database due to the value specified for either the DIRSIZE or DIRTIME start options.
RESOURCE TYPE	On the Monitor Status Display, the type of resource being monitored. On Global and User Alerts Displays, the type of resource for which the alert occurred. On the Resource List Display, the type of resources listed on the display.
RETRANSMIT BYTE% or RETRANSMIT% BYTES	Percentage of retransmitted bytes.
RETRANSMIT FRAMES	Number of retransmitted frames.
RETRANSMIT IFRM% or RETRANSMIT% FRAME	Percentage of retransmitted I-frames.
RETRANSMIT BYTES	Number of retransmitted bytes.
REXMIT NLPS or RETRANSMIT NLPS	Number of retransmitted NLPs.
REXMIT SEGMENTS	Total number of retransmitted segments.

Heading	Description
RMSG%	Percentage of messages retransmitted by the NCP because of communication errors.
RNR SENT RECV	Total number of sent and received "Receive Not Ready."
ROUTES-CALCULATED: MOD	Number of routes calculated using a modified tree.
ROUTES-CALCULATED: NEW	Number of routes calculated using a new tree.
ROUTES-CALCULATED: OLD	Number of routes calculated using an existing tree.
ROUTE TREE DISCARDED CACHE FULL	Number of times a routing tree was discarded due to the tree cache becoming full.
RR SENT RECV	Total number of sent and received "Receive Ready."
RTD	Round trip delay.
RTP STATE	RTP state.
RTRAN	Percentage of line capacity used for retransmissions.
RTRAN BYTE% or RETRANS %BYTE or RBYT%	Percentage of bytes retransmitted by the NCP because of communication errors.
RTRAN IFRM% or RETRANS %IFRM	Percentage of retransmitted information frames.
RTRAN MSG% or RETRANS %MSG	Percentage of messages retransmitted by the NCP because of communication errors.
R-TRIP-TIME TOT	The amount of time, in seconds, that has elapsed since the last TCP segment was transmitted by the TCP stack until the ACK was received.
R-TRIP-TIME VAR	Smooth time variance—the deviation in the distribution of elapsed round-trip transmission times. Smooth time is the decaying average round-trip time since the session started that is weighted towards the most recent transmissions. TCP/IP uses smooth time to calculate time out values for unacknowledged segments.
SA	Subarea number.
SCOPE	The type of NCP resource for which you want statistics displayed. Valid values for SCOPE include LINES, PUS, LUS, ALL, and ONLY.
SEARCH-REQUESTS: RFOUND	Number of matches where this node received a search request from another node and the requested resource was found.
SEARCH-REQUESTS: NOTFND	Number of matches where this node received a search request from another node and the requested resource was not found.
SEARCH-REQUESTS: NEGREP	Number of failed searches completed by receipt of a negative reply.

Heading	Description
SEC. UTL%	Secondary (receive) line utilization. For full-duplex lines, this field is always displayed. For half-duplex lines, it is displayed only in a summary report.
SECONDARY LU NAME	VTAM name for the secondary logical unit (SLU). An SLU can be either a terminal or application.
SEGSIZE OPT	The optimal maximum segment size for the connection.
SEGSIZE SEND	The maximum segment size that can send on the connection.
SEND WINDOW	The maximum send window seen on the TCP/IP connection.
SENT SEGMENTS	Total number of segments sent, excluding those containing only retransmitted octets.
SES. RECOVERIES: SUCCES	Number of sessions recovered successfully by this VTAM.
SES. RECOVERIES: ATTEMPT	Number of session recoveries attempted by this VTAM.
SESSION	The value OK indicates that there is an active session between NetSpy and the NPALU in the NCP. The value of NO-SESSION indicates that the session is not active and should be established with the ACQUIRE command.
SESS TYPE	The session type. The definitions below correspond to a line of data on a screen or report. **(blank)** The data does not contain any LU 6.2 session data and is not comprised solely of session manager virtual LU session data. (Possibly LU0 or LU2 session data.) **V-LU** The data is comprised solely of data collected by monitoring session manager virtual LU sessions. **LU62** The data is comprised solely of data collected by monitoring LU 6.2 sessions, using the “normal” response time measurement algorithm. **62RT** The data is comprised solely of data collected by monitoring LU 6.2 sessions using an enhanced response time measurement algorithm for sessions that do not follow the “normal” protocol. **MX62** The data is comprised of data collected by monitoring a mixture of LU 6.2 sessions, and non-LU 6.2 sessions such as LU0 or LU2. **NVW** Data collected by monitoring an N-Vision for Windows workstation session.

Heading	Description
SHM	Short hold mode. This is a function of the X.25 NPSI that allows a virtual connection to be cleared if there is no traffic for a time interval specified by the user. When traffic resumes, the connection is automatically reestablished.
SIO	The number of start I/O operations counted for the subchannel.
SLNU or SEC LINE	Secondary (receive) line utilization. For full-duplex lines, this field is always displayed. For half-duplex lines, it is displayed only in a summary report.
SLODN	The total number of times the controller went into slowdown mode
SLOWDN TIME	The time in seconds that the NCP has spent in slowdown.
SLOWDOWN	The number of times slowdown mode has been entered. This field applies to READ subchannels only. For WRITE subchannels, the value will be N/A. An incrementing slowdown count indicates a lack of available I/O buffers.
SLOW START	Slow start threshold.
SLT	The time in seconds that the NCP has spent in slowdown.
SLU NAME	The VTAM name for the secondary logical unit, i.e., the application, terminal, or the virtual terminal name from a session manager, if the session manager interface is not active. If you press the PA2 key, this field will contain either the TSO user ID for a native TSO session or the N-Vision/TPX user ID for sessions accessed through the session manager. On the Terminal Traffic and Response Time screen in ESA environments, this field will contain the TSO user ID for virtual TSO sessions.
SMF	Data is being logged to SMF.
SNDBYTE/SEC	Outbound bytes per second for a particular cluster and line.
SNDIFR/MIN	Number of information frames sent per minute.
SNDMSG/MIN	Outbound messages per minute for a particular line and cluster.
SNDPAC/MIN	Number of packets sent per minute.
STARTD	The date on which a particular interval starts.
STARTT	The time at which a particular interval starts.
STATE	RTP state.
STATUS	Current status of either: ■ The virtual route, either held, which means the route is blocked

Heading	Description
	and its PIUs are not sent or open, which means the PIUs are sent. ■ The MPC subchannel: ACTIVE, INOP (inoperative with no statistics available), RESET (no statistics available), or SLOWDOWN (active, but in SLOWDOWN mode).
STOPD	The date on which a particular interval stops.
STOPT	The time at which a particular interval stops.
SUBCHANNEL	The hexadecimal channel unit address of the MPC group subchannel. Each MPC group is comprised of at least one READ and WRITE subchannel. The subchannels correspond to the READ and WRITE keywords coded on the LINE macro in the VTAM definition for the MPC group being displayed.
T or U or S	The LOG or SMF record subtype. The subtype can be T, U, or S.
TARGET %MET VALU	Target values and percentages of transactions that meet each target's response time value.
TDU: ORIG	Number of topology database updates (TDUs) originated by this node.
TDU: PROP	Number of TDUs propagated by this node.
TDU-RECEIVED: DISC	Number of TDUs received by this node and discarded because the RSN is not valid. (TDU is rebroadcast).
TDU-RECEIVED: INC	Number of TDUs received by this node and discarded because of data inconsistency. (TDU is rebroadcast).
TDU-RECEIVED: SEQ	Number of TDUs received by this node and discarded by this node for normal reasons. Resource sequence number (RSN) is valid, but data already seen.
TDU-RECEIVED: UPD	Number of TDUs received by this node resulting in a topology database update.
TG FAILURES	Number of TG failures at this node.
THINK WAIT	The length of time the user has been waiting before entering a new transaction after the last transaction terminated.
T G	Indicates (with the letter T) whether the resource is a transaction group rather than an application.
TIC UTIL%	The percentage of the time interval that the token interface coupler (TIC) was busy sending or receiving bytes. Valid for PLINKs only.
TIME	Time at which the alert occurred.

Heading	Description
TIME OUTS	LLINKs or TIC3PUs for which more timeouts have occurred during the interval than the number you specify, or number of timeouts.
TIMERS	The number of times a channel program was started because the period specified for queuing channel-to channel PIUs expired. The desirable value is zero; an occasional nonzero value is acceptable. You can decrease the value of TIMERS by setting the DELAY parameter on the LINE definition statement to zero or by using transmission priority 2.
TIMES EXP	Number of times the pool has expanded since the last SMS record was written
TITLE	Title of the monitor.
TUNING STATISTICS	The name of the control block being reported on.
TOPOLOGY DATABASE STATS: CDS	Number of central directory server nodes in the topology database.
TOPOLOGY DATABASE STATS: ENODS	Number of end nodes in the topology database.
TOPOLOGY DATABASE STATS: ITRCHG	Number of interchange nodes in the topology database.
TOPOLOGY DATABASE STATS: NNODS	Number of network nodes in the topology database.
TOPOLOGY DATABASE STATS: TGS	Number of unidirectional TGs in the topology database.
TOPOLOGY DATABASE STATS: VRS	Number of virtual routes in the topology database.
TOPOLOGY DATABASE UPDATES: ORIGINATED…	Number of topology database updates (TDUs) originated by this node.
TOPOLOGY DATABASE UPDATES: PROPOGATED…	Number of TDUs propagated by this node.
TOT or TOTAL	Total average network delay, the sum of the BTP, IXT, FEP, WOT, and OXT delays.
TOTAL FRAMES SENT	Total number of frames sent.
TOTAL FRAMES RECV	Total number of frames received.
TOTBYTE/SEC	Total number of bytes per second.
TOTIFR/MIN	Total number of information frames per minute.
TOTPAC/MIN	Total number of packets per minute.

Heading	Description
TRACE	Indicates whether tracing is activated.
TRANSMIT DEFERRED	Total number of transmitted deferred.
TRANS PRTY or T P	Transmission priority of the virtual route. This is the rank assigned to the PIU that determines when the PIU will be selected for transmission.
TRCALL	Indicates whether buffer tracing is activated.
TREE DISC	Number of times a routing tree was discarded due to the tree cache becoming full.
TREES IN TREE CACHE	Current number of trees in the tree cache.
TRGT 1-4	The percentage of all transactions having met each of the four defined target values.
TSWEEP	The number of sweeps initiated due to a timeout. A sweep is a special data block that is exchanged with the adjacent host to verify that data has not been lost for the MPC group.
T-TIME B/HELD	Total amount of time that the virtual route was blocked or held during an interval.
TTLBYTE/SEC	Total inbound and outbound bytes per second for a particular cluster and line.
TTLMSG/MIN	Total inbound and outbound messages per minute for a particular cluster and line.
TYPE	Resource type.
USER	The specified threshold in tenths of seconds for user response time. If this field is blank, no threshold was specified.
USER ID	For TCP/IP connections, the procedure name that opened the socket for the connection. For FTP, the TSO user ID.
UTL	Line utilization, available only for lines for which you have specified a line speed in the NCP generation. This field indicates the percentage of the total capacity of the line being used.
VL or V	Virtual session indicator. A “V” appears in this column when a multiple session manager on behalf of the real terminal establishes a virtual session. A blank indicates a real session.
VIRTUAL SESSION	Indicates that a multiple session manager on behalf of the real terminal has established a virtual session. Note that response time for a virtual session includes the response time from the physical terminal to the session manager when a transaction is passed along for the virtual terminal session.

Heading	Description
VR#	The virtual route number for a particular session.
VR ID	ID of the virtual route for which you want statistics.
VR NUM or VR NO	Number of the virtual route for which you want statistics.
WAIT(O)	Wait for outbound delay.
WINDOW SIZE	Average window size, average number of PIUs in a virtual route pacing group, for a particular virtual route during an interval.
WORST HOST	Worst response time for the host during the interval.
WORST NET	Worst response time for the network during the interval.
WORST-RESP HOST NET	Worst response time for both the host and the network during the interval.
WOT	Wait for outbound delay, the amount of time the message waits in the NCP buffers before being sent to the cluster controller (called queue time).
WRITE %	The percentage of WRITE start I/Os issued on a particular subchannel. This can help you determine how well the load is balanced across the WRITE subchannels.
WRITES	The total number of WRITE start I/Os issued for the MPC group.
XDMN FLAG	Cross-domain flag, indicating that this is a cross-domain application.
#ATTNS	Number of attentions presented to a channel adapter when that channel adapter is defined as a line.
# BYTES	Number of bytes written to the coupling facility structure.
# of B/H, or # PIU B/H	Number of PIUs blocked or held during the current interval.
# D-BIT RCVPACK	Number of data packets received with the D-bit (delivery confirmation bit) set on.
# D-BIT SNDPACK	Number of data packets sent with the D-bit (delivery confirmation bit) set on.
# ERRORS	Number of errors for the specified time interval.
#INN-SHM RECONN	Number of intermediate network node (INN) short hold mode (SHM) reconnections.
# M-BIT RCVPACK	Number of data packets received with the M-bit (more data bit) set on.
# M-BIT SNDPACK	Number of data packets sent with the M-bit (more data bit) set on.
# MESSAGES	Number of messages for the specified time interval.
# NEW VC	Number of new virtual circuits connected in this interval.

Heading	Description
# TRANSACTIONS or # TRSACT	Number of transactions for the specified time interval.
# VC CONN	Current number of virtual circuits connected.
# WRITES	Number of coupling facility writes for this application.
% BUFFER UTL.	NCP buffer utilization for the specified time interval.
% CBS IN USE MAXIMUM CURRENT MINIMUM	The maximum, current, and minimum percentages of all control blocks in use for this pool and interval.
% CYCLE UTL.	NCP cycle utilization for the specified time interval.
% DYNAMIC CBS IN USE MAXIMUM CURRENT MINIMUM	The maximum, current, and minimum percentages of dynamic control blocks used for this pool and interval.
%OVER	The percentage of transactions that have exceeded all four response time targets defined for a particular application.
%PATTNS	Percentage of attentions satisfied by a channel adapter that has been defined as a line.
% RETRANS IFR BYT	Percentage of retransmitted I-frames and bytes, respectively.
% UTILIZATION	Line utilization for the specified time interval.

Glossary

AID key
The ENTER, CLEAR, PA, or function keys.

APPL
ACBNAME or real VTAM name for an application.

APPN
Advanced Peer-to-Peer Networking. APPN consists of extensions to SNA communications that route data between APPC systems to enable users anywhere on the network to communicate directly with each other. APPN makes use of LU 6.2 protocols and is implemented in an SNA Node Type 2.1.

backbone
Physical links in a network connecting subarea nodes. The backbone network consists of the connections between the host and the NCPs.

batch report
A report on network resources, produced by using the records written to the SMF and/or log files. Three kinds of reports can be produced: exception, summary, and graphic.

boundary
The level of the network formed by node type 4s (for example, communication controllers) and their peripheral devices (such as cluster controllers and terminals).

CA-TPX
An ACF/VTAM application from Computer Associates that manages multiple application sessions concurrently on one physical terminal.

channel adapter
A communications controller (37x5) hardware unit used to attach the controller to a host channel. Can be defined to an NCP as a line.

cluster controller
A control unit that manages the data flow to and from its peripheral devices, such as terminals.

cross-domain
A situation involving more than one domain. For example, communication across two domains.

definite response
The response mode in which the host requests the receiver of a transmission to return an indication that the transmission was received.

destination subarea
NCP subarea or another host subarea.

domain
VTAM and its attached physical and logical units.

dynamic reconfiguration
The NCP feature that allows you to change the configuration of PUs and LUs without regenerating the NCP.

exception report
A batch report of any network resource that exceeded your defined target.

full duplex
Session in which data can flow in both directions simultaneously.

gateway NCP
An NCP on the boundary between networks in SNI.

generic name
Name in which an asterisk (*) is used to stand for any character.

graphic report
A batch report that produces a graph of a single variable for a group of applications, terminals, NCPs, lines, or clusters.

half duplex
Session in which data can flow in only one direction at a time.

host response time
Response time of the host.

ICU (Interactive Chart Utility)
IBM software that allows you to customize graphs produced by using GDDM.

INITPRM
Member of the data set NETSPY.CNTL, containing the initialization parameters for NetSpy.

interactive component
The NetSpy feature that displays collected statistics of current real-time and historical activity on your screen.

log files
Optional user files to which NetSpy will write statistics for use in the online historical displays and/or the batch reports.

logical unit (LU)
In SNA, a 3270-type terminal or the application program it communicates with. It is the end user's port into the network. When used to refer to a terminal monitored by NetSpy, it is associated with VTAM, and not NCP, statistics.

multidomain
Consisting of two or more domains.

NCP (Network Control Program)
IBM's software that runs in a 37x5 communications controller to manage network traffic.

NCP interface
The NetSpy component that collects traffic and error statistics on lines, controllers, and terminals.

network gateway accounting
The collection of SNI network statistics from the start to the end of a session that traverses a gateway network.

network response time
Response time of the network.

network session accounting
The collection of boundary network statistics for SDLC devices from the start of a session to its end.

NTN
NetSpy to NetSpy or NetSpy to NetMaster session.

ODLC
Outboard Data Link Control. Refers to Token Ring (TIC3), SDLC, and ESCON resources attached to the 3746 Model 900. These resources are considered "outboard" since the 3746 Model 900 performs the data link control functions normally performed by the 3745.

origin subarea
The host subarea.

outputs
Application writes issued.

path information unit (PIU)
An information unit consisting of a transmission header, a request header, and a request unit.

physical unit (PU)
Physical components of the SNA network, such as the host, communications controller, and terminal.

PIU
A path information unit containing control information and (optionally) data that has been passed between half sessions.

PLU
Primary logical unit in an LU-LU session.

poll response time
The time it takes for a bit to travel from one destination to another.

privileged user
A NetSpy user who has the authority to issue all NetSpy commands.

session
A logical connection between two entities, such as between two end users or an end user and an application.

session manager
An application that manages multiple virtual terminal sessions concurrently on one physical terminal.

SLU
Secondary logical unit in an LU-LU session.

SNA (Systems Network Architecture)
A network that conforms to specific formats and protocols. SNA enables the reliable transfer of data among end users.

SNI (Systems Network Interconnection)
A means of interconnecting two or more independent SNA networks so that sessions can occur across the network boundaries.

subarea node
Either a host or a front-end in an SNA network.

summary report
A batch report that produces details of a variable for a group of applications, terminals, NCPs, lines, or clusters.

TCP/IP
Transmission Control Protocol/Internet Protocol. A communications protocol that lets different types of computers and computer networks communicate with each other. TCP/IP has become the worldwide standard for communications.

terminal
Terminal as defined to NetSpy is associated with NCP, and not VTAM, statistics.

TIC3
Type 3 Token Ring Interface Coupler. This coupler is functionally equivalent to a type 2 token ring interface coupler except it is connected through the 3746 Model 900 instead of the NTRI function of the 3745.

trace facility
The NetSpy feature that allows you to trace transactions on an exception basis. Trace facility records can be viewed online or printed offline.

transaction
In NetSpy, one or more inputs from a terminal or application associated with one or more outputs from the partner application. For terminal sessions, an input is any activity followed by pressing an AID key such as the Enter key or the PF1 key.

For non-LU 6.2 application sessions, the specific number of inputs and outputs is configured for your site through the EOT parameter on the APPL statement in the INITPRM member or file.

For LU 6.2 sessions, a transaction is the same as an LU 6.2 conversation. An LU 6.2 transaction starts with an ATTACH command and is followed by one or more inputs and outputs. The LU 6.2 transaction is terminated when a conditional end bracket is sent. Either partner on an LU 6.2 session can start or end transactions.

transmission delay
The time required to change data into bytes for transmission.

transmission priority
The rank assigned to a PIU that determines when it will be selected for transmission. For example, a PIU with a transmission priority of 1 will be transmitted before a PIU with a transmission priority of 2.

UDP (User Datagram Protocol)
A transport protocol that provides a connectionless service and is an application interface to IP (UDP/IP). The UDP is used for application-to-application programs between TCP/IP host systems.

user response time
The host response time plus the network response time.

virtual route
A logical connection between two subarea nodes. It is bi-directional, with the route going from the origin subarea to the destination subarea and back again.

virtual session
A session established through a session manager between a user's terminal and the real application.

VTAM (Virtual Telecommunications Access Method)
A collection of programs residing in the host that control communication between elements in a Systems Network Architecture (SNA) network.

VTAM interface
The NetSpy component that monitors network and host response times and traffic for host application sessions.

Index

#

#BYTES parameter, 13-19, 13-30, 13-39

#MSGS parameter, 13-18, 13-29, 13-39

#SESS parameter, 13-19, 13-30, 13-39

#TRANS parameter, 13-19, 13-30, 13-39

$

$PNETSPY command, 5-72

A

ACCT parameter, 13-21

ACQUIRE command, 5-7, 6-41

AHRSP parameter, 13-18, 13-29, 13-39

ALERT command, 5-7

alert statistics, requesting, 5-14

Alert Systems Selection Menu, 10-2

alerts, 1-17
- general, 1-18
- general alerts, 10-3
- graphic, 1-18
- graphic alerts, 10-21
- trace, 1-19
- trace alerts, 10-29

ALL parameter, 13-29

ALLRSP parameter, 13-29

ALLUTL parameter, 13-29

alternate log file
- reporting from, 3-4

ANALYZE command, 5-7

ANRSP parameter, 13-18, 13-29, 13-39

APPLDSGN parameter, 13-21

application design issues, 6-13

Application Response Time Distribution Screen, 6-9

Application Summary Record Display Menu, 8-15

Application Summary/Graphic Display Menu, 8-30

Application Traffic and Response Time Screen, 6-8

APPN data, 1-3

APPN/MNPS Selection Menu, 6-74

APPNMENU command, 5-8

AURSP parameter, 13-18, 13-29, 13-39

B

backbone network response time measurement, 1-13

batch reporting
- control statement syntax and order, 13-6
- control statements, 13-4
- Database records, 13-2
- DEFINE control statement, 13-7
- ECHO control statement, 13-7
- exception report, 13-9
- functions, 13-1
- GRAPH control statement, 13-35
- graphic report, 13-35
- grouping terminals, 13-4
  - by CLUSTER, 13-5
  - by LINE, 13-5
  - by LU, 13-5
  - by resource list, 13-5

kinds of reports available, 13-2
log files, 13-2
NCPARSE control statement, 13-8
PAGESIZE control statement, 13-8
PRINT control statement, 13-9
sample batch control statements, 13-45
sample JCL, 13-45
sample reports, 13-43
SMF files, 13-2
SMF# (or SMFNO) control statement, 13-7
SUMMARY control statement, 13-24
SUMMARY control statement syntax, 13-24, 13-25, 13-26, 13-28
summary report, 13-24

batch reports, 1-14
exception, 1-7
graphic, 1-7
summary, 1-7

boundary lines in modeling, 12-2

buffer statistics, 6-45, 6-49

Buffer Statistics Selection Menu, 6-49

buffer traces, 1-17

Buffers Summary Record Display Menu, 8-26

BUFFMENU command, 5-8

BYAPPL parameter, 13-31, 13-40

BYDAY parameter, 13-34

BYINTVL parameter, 13-33

C

CA-ACF2, 4-2

CA-Datacom, 1-24

CA-Top Secret, 4-2

CA-TPX interface, 1-19

CCU parameter, 13-19, 13-30, 13-39

channel adapter
CA Summary Record Display Menu, 8-19
CA Summary/Graphic Display Menu, 8-36

CHQ parameter, 13-19, 13-30, 13-40

CICS, 1-2

COLLECT command, 5-8

COLLECT POLLSTAT statement, 1-12

collecting data from multiple NetSpys, 5-8

COMBINED parameter, 13-32, 13-42

commands
explicit. *See* explicit commands
for Trace Facility, 9-9
issuing from the Operator Command Menu, 6-38
summary of, 5-2

communicating with another NetSpy, 5-52

components of NetSpy, 1-1
Interactive, 1-6
Modeling and Recommendations, 1-7
Network Data Collection, 1-2
Reporting, 1-7

CONGSCNT parameter, 13-19, 13-30, 13-40

CONNECT command, 5-12

cross-domain communication, 1-22

current real-time displays. *See* real-time displays

D

DA command, 5-13

DALRT command, 5-14

DAR command, 5-14

Database, 3-1, 11-5, 13-2. *See also* logging data
purging, 3-3

DB logging destination, 11-5

DBUFRUSE command, 5-15

DCRPLUSE command, 5-15

DDIRS command, 5-16

DEFINE command, 5-16, 6-40

DEFINE control statement, 13-7

DEFINE NWAY command, 6-39

definite response, 1-11
unavailable, 1-12

DEFMON command, 5-17

DELETE command, 5-17, 6-42

DELMON command, 5-17

DGALERT command, 5-18
DIOBFUSE command, 5-19
DISCONN command, 5-19
DISMON command, 5-20
displays, 1-14
DMNPS command, 5-20
DN command, 5-20
DNCB command, 5-22
DNETH command, 5-22
DNFR command, 5-24
DNLIST command, 5-25
DNS command, 5-26, 6-40
DNSA command, 5-28, 6-42
DNTIC3 command, 5-28
DNTR command, 5-29
DNX25 command, 5-30
DNX25M command, 5-30
DRTP command, 5-32
DT command, 5-32
DTA command, 5-34
DTCPC command, 5-36
DTCPCD command, 5-36
DTCPS command, 5-37
DTCPV command, 5-37
DTNSTATS command, 5-37
DTOPO command, 5-38
DTR command, 5-38
DUALERT command, 5-40
DUDPC command, 5-41
DUDPCD command, 5-41
dump files for logged data, 3-4
DV command, 5-41
DVO command, 5-43
dynamic reconfiguration, 1-16

E

ECHO control statement, 13-7
end-of-transaction mode parameter, 5-33, 5-40
EOT=LASTOUT, 5-33, 5-40
ERRS parameter, 13-20, 13-30, 13-40
Ethernet Network Statistics Screen, 6-32
Ethernet Resource Statistics Menu, 6-30
Ethernet Summary Record Display Menu, 8-24
Ethernet Summary/Graphic Display Menu, 8-40
exception report, 13-9
exception traces, 1-17
EXCLU62 parameter, 13-21, 13-31, 13-41
EXDAYS parameter, 13-23
explicit commands, 5-1
- $PNETSPY, 5-72
- ACQUIRE, 5-7
- ALERT, 5-7
- ANALYZE, 5-7
- APPNMENU, 5-8
- BUFFMENU, 5-8
- COLLECT, 5-8
- CONNECT, 5-12
- DA, 5-13
- DALRT, 5-14
- DAR, 5-14
- DBUFRUSE, 5-15
- DCRPLUSE, 5-15
- DDIRS, 5-16
- DEFINE, 5-16
- DEFMON, 5-17
- DELETE, 5-17
- DELMON, 5-17
- DGALERT, 5-18
- DIOBFUSE, 5-19
- DISCONN, 5-19
- DISMON, 5-20
- DMNPS, 5-20
- DN, 5-20
- DNCB, 5-22
- DNETH, 5-22
- DNFR, 5-24
- DNLIST, 5-25
- DNS, 5-26
- DNSA, 5-28
- DNTIC3, 5-28

DNTR, 5-29
DNX25, 5-30
DRTP, 5-32
DT, 5-32
DTA, 5-34
DTCPC, 5-36
DTCPCD, 5-36
DTCPS, 5-37
DTCPV, 5-37
DTNSTATS, 5-37
DTOPO, 5-38
DTR, 5-38
DUALERT, 5-40
DUDPC, 5-41
DUDPCD, 5-41
DV, 5-41
DVO, 5-43
FORCEDR, 5-44
GALRT, 5-44
GALWARN, 5-45
GRAPH, 5-45
HELP, 5-48
HOSTIPA, 5-49
HOSTIPC, 5-49
HOSTIPD, 5-50
LOGO, 5-5, 5-50
LOGOFF, 5-50
MENU, 5-50
MVS Modify, 5-5, 5-50
NCPRETRY, 5-51
NDSP, 5-51
NETSPY, 5-52
NETSPY operand, 5-13, 5-14, 5-21, 5-23, 5-25, 5-29, 5-30
NTNOPER, 5-53
OPER, 5-53
PNSA, 5-53
PRINT, 5-54
PSMF, 5-58
PTASK, 5-59
REPORT, 5-59
RESOURCE, 5-60
RLIST, 5-60
SETMODE, 5-61
SHUTDOWN, 5-62
SNSA, 5-63
SSMF, 5-63
STASK, 5-64
STAT, 5-65
SUMMARY, 5-65
SWITCH, 5-69
TCPIP, 5-69
TCPIPC, 5-70
TCPIPH, 5-70
TRACE, 5-70
TRACED, 5-71
TRACEO, 5-71
TRACES, 5-71
TRCD, 5-71
VDSP, 5-72

F

FDR command, 6-39

FORAPPL parameter, 13-21, 13-31, 13-40

FORCEDR command, 5-44

Frame Relay Network Statistics Screen, 6-35

Frame Relay Statistics Selection Criteria Menu, 6-33

Frame Relay Summary Record Display Menu, 8-25

Frame Relay Summary/Graphic Display Menu, 8-41, 8-42

function keys, 4-5, 6-2, 8-4, 10-2, 10-27, 12-3

G

GALRT command, 5-44

GALWARN command, 5-45

gateway accounting. *See* network gateway accounting. *See* network accounting

general alerts, 1-18

General Alerts System Selection Menu, 10-4

generic name, 4-6, 5-1

Global APPN Directory Services Data Screen, 6-74

Global APPN Topology Data Screen, 6-75

GRAPH command, 5-45

GRAPH control statement, 13-35
    parameters, 13-38

GRAPH Report: NetSpy Network Statistics, 8-44

graphic alerts, 1-18
    choosing resources to graph, 10-22, 10-25
    customizing graphs, 10-23
    data used, 10-21

functions, 10-21
GMAXENT parameter, 10-28
Graphic Alerts Customization Menu, 10-23
Graphic Alerts Selection Menu, 10-25
maximum number resources, 10-28
scale, 10-23
specifying a threshold, 10-23

graphic report, 13-35

GRBUCKET parameter, 13-30, 13-39

GWA parameter, 13-21

H

hardware monitor, 1-10

HBAR parameter, 13-42

HELP command, 5-48

HELP facility, 4-9

historical displays
Application Summary Record Display Menu, 8-15
Application Summary/Graphic Display Menu, 8-30
Buffers Summary Record Display Menu, 8-26
CA Summary Record Display Menu, 8-19
CA Summary/Graphic Display Menu, 8-36
contents, 8-4
Ethernet Summary Record Display Menu, 8-24
Ethernet Summary/Graphic Display Menu, 8-40
Frame Relay Summary Record Display Menu, 8-25
Frame Relay Summary/Graphic Display Menu, 8-41, 8-42
how they function, 8-1
Line/Cluster/Terminal Summary/Graphic Display Menu, 8-26
Line/CU/TERM Summary Record Display Menu, 8-11
logging function, 3-2, 8-1
logs, 3-1
LU (Terminal) Summary Record Display Menu, 8-13
LU (Terminal) Summary/Graphic Display Menu, 8-28
NCP Summary Record Display Menu, 8-16
NCP Summary/Graphic Display Menu, 8-31
NCP TIC3 Summary/Graphic Display Menu, 8-38
NTRI Summary Record Display Menu, 8-23
NTRI Summary/Graphic Display Menu, 8-39
PRINT Report: NetSpy Summary Record Display, 8-43
SUMMARY ALL Report (Application): NetSpy Network Statistics, 8-45
SUMMARY ALL Report (Channel Adapter), 8-46
SUMMARY ALL Report (Terminal): NetSpy Network Statistics, 8-45
SUMMARY Report: NetSpy Network Statistics, 8-44, 8-46
TIC3 Summary Record Display Menu, 8-22
VR Summary Record Display Menu, 8-18
VR Summary/Graphic Display Menu, 8-34
X.25 MCH Line Summary Record Display Menu, 8-14
X.25 MCH Line Summary/Graphic Display Menu, 8-29
X.25 MCH PU Summary Record Display Menu, 8-17
X.25 MCH PUs Summary/Graphic Display Menu, 8-33
X.25 Statistics Summary Record Display Menu, 8-20
X.25 VC Summary Record Display Menu, 8-21
X.25 VCs Summary/Graphic Display Menu, 8-37

HOSTIPA command, 5-49

HOSTIPC command, 5-49

HOSTIPD command, 5-50

I

IDMS, 1-2

IFRMM parameter, 13-20, 13-31, 13-41

interactive component
contents of screens, 4-3
explicit commands, 5-1
function keys, 4-5
historical displays, 8-1
how it functions, 4-2
main menu, 4-4
operator commands for tracing, 9-9
real-time displays, 6-1
REFRESH mode, 4-5

Interactive Component, 1-6

INTERVAL parameter, 13-33

J

JCL
- for batch reports, 13-45
- for filtering trace records, 9-17
- for printing trace records, 9-15
- with RSCPARM DD statement, 4-8, 5-61, 13-45

L

Line/Cluster/Terminal Summary/Graphic Display Menu, 8-26

Line/CU/TERM Summary Record Display Menu, 8-11

Log. *See* logging data

log destinations, 3-1

log files, 1-7, 1-16, 8-1, 12-2, 13-2

logging data, 3-1
- accounting statistics, 3-3
- comparison of destinations, 3-1
- parameters required for, 3-2
- to a central log, 3-4
- to dump files, 3-4
- to SMF, 3-2
- to the NetSpy Datacom Database, 3-2
- to the NetSpy Log, 3-2

LOGO command, 5-50

LOGOFF command, 5-50

LU (Terminal) Summary Record Display Menu, 8-13

LU (Terminal) Summary/Graphic Display Menu, 8-28

M

MAX parameter, 13-34

MAX#ITVL parameter, 13-34

MAX#RPT parameter, 13-34

MAXDPCT parameter, 13-21

MAXNOENT parameter, 9-16

member PRTRACE, 9-15

member TPNSFLTR, 9-17

MENU command, 5-50

MIDOUTDR, 13-21

MNPS Data Screen, 6-77

modeling, 1-7

modeling and recommendations
- benefits, 12-1
- boundary lines, 12-2
- description of, 12-1
- function keys, 12-3
- hardware characteristics, 12-1, 12-10
- line selection, 12-7
- log files, 12-1, 12-2
- NCP characteristics, 12-1
- NCP parameters, 12-12
- negative poll, 12-2
- network analysis menu, 12-8
- poll response time, 12-2
- release requirements, 12-2
- time interval, 12-3
- traffic characteristics, 12-1, 12-11
- tuning recommendation screens, 12-14
- turnaround times, 12-2
- use of VTAM data, 12-5

Modeling and Recommendations component, 1-6, 1-7

modes for data display, 5-61

monitoring status of NCP nodes, 6-43

MSGSM parameter, 13-19, 13-30, 13-40

MVS Modify command, 5-5, 5-50

N

NCP
- data, 1-3
- interface, 1-3

NCP Control Block Pool Statistics Selection Criteria Menu, 6-36

NCP Control Block Statistics Screen, 6-37

NCP List Screen, 6-35

NCP Network Statistics Screen, 6-21

NCP Node Monitoring Status Screen, 6-43

NCP Resource Statistics Menu, 6-18

NCP statistics, 4-3

NCP Statistics Screen, 6-20

NCP Statistics Selection Menu, 6-16

NCP Summary Record Display Menu, 8-16

NCP Summary/Graphic Display Menu, 8-31

NCP TIC3 Summary/Graphic Display Menu, 8-38

NCPARSE control statement, 13-8

NCPRETRY command, 5-51

NCPs, displaying, 6-35, 6-37

NDSP command, 5-51

NetMaster TCP/IP diagnostic displays, 6-56

NetSpy
- components, 1-1
- function, 1-1, 1-26
- in an OS/390 environment, 1-2
- security interface, 1-25

NETSPY command, 5-52

NetSpy CRPL Allocation by APPL Screen, 6-50

NetSpy I/O Buffer Allocation by APPL Screen, 6-51

NetSpy Interface Detail display, 6-72

NetSpy Interface Summary display, 6-68

NetSpy Stack Summary display, 6-68

NetSpy TCP Connection Detail display, 6-70

NetSpy TCP Connection Summary display, 6-64

NetSpy TCP/VTAM Connection Summary display, 6-65

NetSpy TNSTATS Display for Channel-to-Channel Adapters, 6-54

NetSpy Tuning Statistics Display for Local SNA Clusters, 6-54

NetSpy Tuning Statistics Display for Multi-Path Channels, 6-55

NetSpy UDP Connection Detail display, 6-71

NetSpy UDP Connection Summary Statistics display, 6-66

NetSpy-to-NetSpy communication, 1-9, 5-52
- benefits, 1-9
- calculating response times, 1-12
- central log, 1-9
- COLLECT command, 5-8
- COLLECT POLLSTAT statement, 1-12
- CONNECT command, 5-12
- defining NCPs, 1-12
- DISCONN command, 5-19
- for real-time displays, 6-1
- starting, 5-12
- status, 6-42, 6-43
- stopping, 5-19
- valid nsyxnames, 6-43

network
- performance time, 1-17

network accounting
- data included, 1-16, 11-1
- defaults, 11-3
- gateway (GWA), 1-16, 11-1
- NCP generation, 11-3
- SESSACC parameter, 11-3
- session (NSA), 1-16, 11-1
- where to write records, 11-1

Network Data Collection component, 1-2
- NCP interface, 1-3
- VTAM interface, 1-2

network gateway accounting
- byte threshold, 11-3, 11-4
- displaying status, 11-8
- GWSESAC parameter, 11-3
- how to start from startup parameters, 11-5
- how to start from the Operator Command Menu, 11-6
- NETACCT statement, 11-5
- parameters, 11-5
- PIU threshold, 11-4
- SESSACC parameter, 11-3

network session accounting
- byte threshold, 11-3, 11-6
- displaying status, 11-8
- how to start from startup parameters, 11-5
- how to start from the Operator Command Menu, 11-6
- how to stop, 11-4
- parameters, 11-5
- PIU threshold, 11-3, 11-4, 11-6
- status, 6-42

NeuPerformance Advisor
- interface for NetSpy, 7-1

new password, 4-2

NOECHO parameter, 13-22

NRSTMDT, 13-21

NSA parameter, 13-21

NSYDBCV utility, 13-2

NSYNHIST program
- control statements, 7-2
- reports, 7-4
- return codes, 7-4
- sample JCL, 7-2

NTNOPER command, 5-53, 6-42

NTRI Network Statistics Screen, 6-25

NTRI Resource Statistics Menu, 6-23

NTRI Summary Record Display Menu, 8-23

NTRI Summary/Graphic Display Menu, 8-39

NULLRUS, 13-21

NWAY, 6-39

Nways, 6-35

O

ODLC data, 6-30

Online Report Menu, 8-6

online reports. *See* historical displays

Online Trace Records Display, 9-7

Online Tuning Statistics Display, 6-52

ONLYLU62 parameter, 13-21, 13-31, 13-41

OPER command, 5-53

operating systems NetSpy runs under, 1-26

operator commands, 6-39. *See also* explicit commands
- ACQUIRE, 6-41
- DEFINE, 6-40
- DELETE, 6-42
- DNS, 6-40
- DNSA, 6-42
- FDR, 6-39
- NetSpy-to-NetSpy Operator Screen, 6-43
- NTNOPER, 6-42
- PMNR, 6-38
- PNSA, 6-42
- PSMF, 6-40
- SMNR, 6-38
- SNSA, 6-42
- SSMF, 6-39

OQLEN parameter, 13-19, 13-30, 13-40

P

PA1 key, 4-5

PA2 key, 4-5, 6-12

PACKM parameter, 13-20, 13-31, 13-41

PAGESIZE control statement, 13-8

PAGESIZE parameter, 9-16

parameters for trace print utility, 9-16

password, 4-2

PEAK parameter, 13-42

PERCENT parameter, 13-33

PMNR command, 6-38

PNSA command, 5-53, 6-42

PREVDAYS parameter, 13-23

PRINT command, 5-54

PRINT control statement, 13-9
- parameters, 13-16

PRINT Report: NetSpy Summary Record Display, 8-43

privileged user, 5-1

PRTRACE member, 9-15

PSMF command, 5-58, 6-40

PTASK command, 5-59

purging the Database, 3-3

Q

qualifier lists, 10-9

R

RACF, 4-2

RBUCKETS parameter, 13-30, 13-39

real-time displays, 6-1
- Application Response Time Distribution Screen, 6-9

Application Traffic and Response Time Screen, 6-8
APPN/MNPS Selection Menu, 6-74
APPN/MNPS statistics, 6-73
Buffer Statistics Selection Menu, 6-49
CRPL Allocation by APPL Screen, 6-50
Ethernet Network Statistics Screen, 6-32
Ethernet Resource Statistics Menu, 6-30
Frame Relay Network Statistics screen, 6-35
Frame Relay Statistics Selection Criteria Menu, 6-33
Global APPN Directory Services Data Screen, 6-74
Global APPN Topology Data Screen, 6-75
I/O Buffer Allocation by APPL Screen, 6-51
MNPS Data Screen, 6-77
NCP Control Block Pool Statistics Selection Criteria Menu, 6-36
NCP Control Block Statistics Screen, 6-37
NCP List Screen, 6-35
NCP Network Statistics Screen, 6-21
NCP Node Monitoring Status Screen, 6-43
NCP Resource Statistics Menu, 6-18
NCP statistics displays, 6-15
NCP Statistics Screen, 6-20
NCP Statistics Selection Menu, 6-16
NetSpy Interface Detail, 6-72
NetSpy Interface Summary, 6-68
NetSpy Stack Summary, 6-68
NetSpy TCP Connection Detail, 6-70
NetSpy TCP Connection Summary, 6-64
NetSpy TCP/VTAM Connection Summary, 6-65
NetSpy UDP Connection Detail, 6-71
NetSpy UDP Connection Summary Statistics, 6-66
NetSpy-to-NetSpy Operator Screen, 6-43
notes on displayed data, 6-3
NTRI Network Statistics screen, 6-25
NTRI Resource Statistics Menu, 6-23
Online Tuning Statistics Display, 6-52
TCP/IP Display Menu, 6-61
TCP/IP Host Management Add Menu, 6-60
TCP/IP Host Management Change Menu, 6-58
TCP/IP Host Management Selection Menu, 6-57
TCP/IP statistics, 6-56
Terminal Response Time Analysis Screen, 6-13
Terminal Response Time Distribution Screen, 6-12
Terminal Traffic and Response Time Screen, 6-10
TIC3 Network Statistics Screen, 6-27
TIC3 Resource Statistics Menu, 6-26
Transmission Priority Statistics Screen, 6-22
Tuning Statistics Display for CTCAs, 6-54
Tuning Statistics Display for LSNAs, 6-54
Tuning Statistics Display for Multi-Path Channels, 6-55
Tuning Statistics Display for NCPs, 6-53
Tuning Statistics Selection Menu, 6-51
VR Statistics Display, 6-48
VR Statistics Display Menu, 6-46
VTAM Application and Terminal Statistics Menu, 6-5
VTAM Buffer Statistics Screen, 6-50
VTAM RTP Data Screen, 6-76
VTAM statistics, 6-4
X.25 Network Statistics Screen, 6-30
X.25 Resource Statistics Menu, 6-28

recommendations, 1-7

REFRESH mode, 4-5

REPORT command, 5-59

Reporting component, 1-7

RESOURCE command, 5-60

Resource List Display, 4-8

Resource List Initialization Menu, 4-7

resource lists. *See* RLIST

response time, 1-2, 1-6
how NetSpy measures, 1-10

response time calculation, 1-12

response time distributions
for applications, 6-9
for terminals, 6-12

REXMIT parameter, 13-41

RLIST, 4-6, 10-9
for batch reports, 13-5

RLIST command, 5-60

RSCPARM DD statement, 4-6, 4-8, 5-61, 13-45

RTT parameter, 13-41

S

SA (SUBAREA) parameter, 13-21, 13-31, 13-41

security interface, 1-25

service level agreements, 1-2

SESS parameter, 13-22

SESSACC feature of NCP, 1-4

session accounting. *See* network session accounting. *See* network accounting

session manager interface, 1-19
    measuring response time, 1-22
    monitoring an application, 1-21
    physical terminals, 1-19
    virtual sessions, 1-19

SETMODE command, 5-61

setting mode for data display, 5-61

SFDR command, 6-39

SHUTDOWN command, 5-62

SMF files, 1-7, 1-16, 13-2. *See also* logging data

SMF# control statement, 13-7

SMFID parameter, 13-22

SMFNO control statement, 13-7

SMNR command, 6-38

SNA Manager. *See* Unicenter SNA Manager Option

SNMP, 1-24

SNSA command, 5-63, 6-42

software monitor, 1-10

specific name, 5-1

SQL, 1-25

SSMF command, 5-63, 6-39

starting NetSpy-to-NetSpy communication, 5-12

STASK command, 5-64

STAT Command, 5-65

stopping NetSpy-to-NetSpy communication, 5-19

SUMMARY ALL Report (Application): NetSpy Network Statistics, 8-45

SUMMARY ALL Report (Channel Adapter), 8-46

SUMMARY ALL Report (Terminal): NetSpy Network Statistics, 8-45

SUMMARY Command, 5-65

SUMMARY control statement, 13-24
    parameters, 13-29

summary report, 13-24

SUMMARY Report: NetSpy Network Statistics, 8-44, 8-46

SWITCH Command, 5-69

T

TCP/IP
    data collected, 1-5
    diagnostic displays, 6-56
    Display Menu, 6-61
    Host Management Add Menu, 6-60
    Host Management Change Menu, 6-58
    Host Management Selection Menu, 6-57
    monitoring, 1-5

TCPIP command, 5-69

TCPIPC command, 5-70

TCPIPH command, 5-70

Terminal Response Time Analysis Screen, 6-13

Terminal Response Time Distribution Screen, 6-12

Terminal Traffic and Response Time Screen, 6-10

TIC3 Network Statistics Screen, 6-27

TIC3 Resource Statistics Menu, 6-26

TIC3 Summary Record Display Menu, 8-22

TITLE parameter, 13-22

TODAY, start or stop date, 8-2

TPNS record filter, 9-17

TPNSFLTR member, 9-17

Trace Alert System Display, 10-29

trace alerts, 1-19, 10-29

TRACE command, 5-70

Trace Display Parameters, 9-6

Trace Facilities Menu, 9-5

Trace Facilities Operator Commands, 9-9

trace files, 9-1

trace modes, 9-2, 9-11

trace print utility, 9-15
    parameters, 9-16

trace reports

Online Trace Records Display, 9-7
print utility, 9-15
Trace Display Parameters, 9-6
Trace Facilities Menu, 9-5
Trace Facilities Operator Commands, 9-9
Trace Status Display for Applications, 9-14
Trace Status Display for LUs, 9-14
Trace Status Menu, 9-12
types of, 9-2

Trace Status Display for Applications, 9-14

Trace Status Display for LUs, 9-14

Trace Status Menu, 9-12

TRACED Command, 5-71

TRACEO command, 5-71

traces
buffer, 1-17
transaction, 1-17

TRACES command, 5-71

traffic alerting, 1-6

transaction traces, 1-6, 1-17
exception, 1-17
transaction-all, 1-17

Transmission Priority Statistics Screen, 6-22

TRCD command, 5-71

TSO, 1-2

tuning statistics, 6-45, 6-51

U

UBUF parameter, 13-19, 13-30, 13-40

UDP
connection detail, 5-41
connection summary, 5-41

Unicenter
integration, 1-24
services for z/OS and OS/390, 1-24
SNA Manager Option, 1-24

Unicenter TNG, 10-8

user ID, 4-2, 4-5, 6-12

user log files, 3-2, 8-1

UTL parameter, 13-19, 13-30, 13-40

V

VDSP command, 5-72

virtual route
Tuning Statistics Display for CTCAs, 6-54
Tuning Statistics Display for LSNAs, 6-54
Tuning Statistics Display for Multi-Path Channels, 6-55
Tuning Statistics Display for NCPs, 6-53
VR Statistics Display, 6-48
VR Statistics Display Menu, 6-46
VR Summary Record Display Menu, 8-18
VR Summary/Graphic Display Menu, 8-34

virtual route statistics, 6-45, 6-46
online report, 8-18

Virtual Route Statistics Screen, 6-48

VR statistics display, 6-48

VR Statistics Display Menu, 6-46

VR, Buffer, and Tuning Statistics Selection Menu, 6-46

VSESSION parameter, 13-31, 13-40

VTAM
operational considerations, 1-2
PMI, 1-3
transaction start and end definitions, 1-10

VTAM Application and Terminal Statistics Menu, 6-5

VTAM Buffer Pool Statistics Screen, 6-50

VTAM data
I/O buffer, 1-26
tuning, 1-25

VTAM interface, 1-2

VTAM RTP Data Screen, 6-76

VTAM statistics, 4-3

VTAM Tuning Statistics Selection Menu, 6-51

W

WHRSP parameter, 13-18, 13-29, 13-39

WNRSP parameter, 13-18, 13-29, 13-39

X

X.25 MCH Line Summary Record Display Menu, 8-14

X.25 MCH Line Summary/Graphic Display Menu, 8-29

X.25 MCH PU Summary Record Display Menu, 8-17

X.25 MCH PU Summary/Graphic Display Menu, 8-33

X.25 Network Statistics Screen, 6-30

X.25 ODLC data, 6-30

X.25 Resource Statistics Menu, 6-28

X.25 VC Summary Record Display Menu, 8-21

X.25 VCs Summary/Graphic Display Menu, 8-37

XDOMAIN parameter, 13-31, 13-40