z/OS

DFSMShsm Storage Administration Reference Summary

SX35-5062-01

z/OS

DFSMShsm Storage Administration Reference Summary

SX35-5062-01

Second Edition, March 2002

This edition applies to Version 1 Release 3 of z/OS™ (5694-A01) and to all subsequent releases and modifications until otherwise indicated in new editions.

This edition replaces SX35–5062–00.

Order publications through your IBM® representative or the IBM branch office serving your locality. Publications are not stocked at the address below.

IBM welcomes your comments. A form for readers' comments may be provided at the back of this publication, or you may address your comments to the following address:

International Business Machines Corporation
RCF Processing, Department M86/050
5600 Cottle Road
San Jose, CA 95193-0001
United States of America

IBMLINK from US: STARPUBS at SJEVM5
IBMLINK from Canada: STARPUBS at TORIBM
IBM Mail Exchange: USIB3VVD at IBMMAIL
Internet: starpubs@us.ibm.com

If you would like a reply, be sure to include your name, address, telephone number, or FAX number.

Make sure to include the following in your comment or note:

- Title and order number of this book
- Page number or topic related to your comment

When you send information to IBM, you grant IBM a nonexclusive right to use or distribute the information in any way it believes appropriate without incurring any obligation to you.

© Copyright International Business Machines Corporation 1984, 2002. All rights reserved.
US Government Users Restricted Rights – Use, duplication or disclosure restricted by GSA ADP Schedule Contract with IBM Corp.

Contents

Chapter 1. Syntax of DFSMShsm Commands 1
How to Read Syntax Diagrams 1

Chapter 2. ABACKUP: Backing Up Aggregated Data Sets 5

Chapter 3. ADDVOL: Adding or Changing the Volumes that DFSMShsm Manages or Owns 7

Chapter 4. ALTERDS: Changing the Parameters that Affect the Backup of Non-SMS-Managed Data Sets 11

Chapter 5. ARECOVER: Recovering a Specified Aggregate Group 13

Chapter 6. AUDIT: Command Syntax for the Enhanced AUDIT Commands 15

Chapter 7. AUDIT: Command Syntax for the Original AUDIT Commands 17

Chapter 8. AUTH: Identifying Authorized DFSMShsm Users 21

Chapter 9. BACKDS: Backing Up a Specific Data Set 23

Chapter 10. BACKVOL: Backing Up Data Sets from a Volume, Dumping Volumes, or Backing Up the Control Data Sets (SMS-Managed Volumes) 25

Chapter 11. BACKVOL: Backing Up Data Sets from a Volume, Dumping Volumes, or Backing Up the Control Data Sets (Non-SMS-Managed Volumes) 27

Chapter 12. BDELETE: Deleting Backup Versions of a Data Set 29

Chapter 13. CANCEL: Canceling a Queued DFSMShsm Request. 31

Chapter 14. DEFINE: Defining Control Structures for Use by DFSMShsm 33

Chapter 15. DELETE: Deleting a Migrated Data Set from a Migration Volume 37

Chapter 16. DELVOL: Removing a Volume from the List of Volumes that DFSMShsm Manages or Owns 39

Chapter 17. EXPIREBV: Deleting Unwanted Backup Versions of Data Sets 41

Chapter 18. FREEVOL: Freeing DFSMShsm-Owned Volumes 43

Chapter 19. HOLD: Preventing All or Some DFSMShsm Functions from Running . . . 45

Chapter 20. HSENDCMD: Issuing DFSMShsm Authorized-User Commands from a TSO Terminal 47

Chapter 21. LIST: Listing Information from the MCDS, BCDS, and OCDS. 49

Chapter 22. LOG: Entering Data into the DFSMShsm Log 53

Chapter 23. MIGRATE: Requesting a Space Management Function (SMS-Managed Data Sets) 55

Chapter 24. MIGRATE: Requesting a Space Management Function (Non-SMS-Managed Data Sets) 57

Chapter 25. ONLYIF: Allowing the Single Command Immediately Following It In ARCCMDxx to be Executed Conditionally . 59

© Copyright IBM Corp. 1984, 2002

Chapter 26. QUERY: Displaying the Status of DFSMShsm Parameters, Statistics, and Pending Requests 61

Chapter 27. RECALL: Recalling a Specific Migrated Data Set 63

Chapter 28. RECOVER: Recovering a Backup Version or Dump Copy of a Data Set or a Volume 65

Chapter 29. RECYCLE: Consolidating Valid Data to One Tape from Other Tapes . . . 67
Syntax of the Generic RECYCLE Command 67
Syntax of the Specific RECYCLE Command 68

Chapter 30. RELEASE: Releasing All or Some DFSMShsm Functions for Processing 69

Chapter 31. REPORT: Requesting Reports Based on DFSMShsm Statistics Records . 71

Chapter 32. SETMIG: Changing the Space Management Status of Non-SMS-Managed Data Sets or Volumes 73

Chapter 33. SETSYS: Establishing or Changing the Values of DFSMShsm Control Parameters 75
SETSYS Fast-Path for DFSMShsm Functions 87
Relationship of SMS to SETSYS Parameters . 92

Chapter 34. STOP: Shutting Down DFSMShsm 95

Chapter 35. SWAPLOG: Switching Between the DFSMShsm Log Data Sets 97

Chapter 36. TAPECOPY: Making Copies of Selected Cartridge-Type Tape Volumes . . 99

Chapter 37. TAPEREPL: Replacing Cartridge-Type Tape Volumes with Their Alternate Volumes 101

Chapter 38. UPDATEC: Recovering the Control Data Sets 103

Chapter 1. Syntax of DFSMShsm Commands

Positional parameters follow the command name in a prescribed sequence. They are shown in *lowercase italic* characters.

Keyword parameters are specific names or symbols that have meaning to the system. They are shown in **UPPERCASE BOLDFACE** characters. When a value can be supplied with a keyword, it is shown in *lowercase italic* characters.

Delimiters are blanks or commas used for separation. The command name must be separated from the first parameter by one or more blanks. One parameter must be separated from another by one or more blanks or by a comma. A semicolon cannot be used as a delimiter because any characters following a semicolon are ignored. Comment delimiters are `/*` and `*/`.

Line continuations are specified by a plus or minus sign as the last character of a current line.

How to Read Syntax Diagrams

To read syntax diagrams, follow one line at a time from the beginning to the end, and code everything you encounter on that line.

The following conventions apply to all syntax diagrams for DFSMShsm commands:

- Read the syntax diagrams from left to right and top to bottom.
- Each syntax diagram begins with a double arrowhead (►►) and ends with opposing arrows (►◄).
- An arrow (→►) at the end of a line indicates that the syntax continues on the next line. A continuation line begins with an arrow (►—).
- Some commands and keywords have alternative abbreviations; these appear as part of the stack for that command or keyword. For example, the alternative abbreviation for SMALLDATASETPACKING is SDSP.

```
►►──┬─SMALLDATASETPACKING─┬──────────────────────────────────────►◄
    └─SDSP────────────────┘
```

- Words in all lowercase *italic* letters represent information you supply. For example, *volser* or *dsname*.

© Copyright IBM Corp. 1984, 2002

- You must provide all items enclosed in parentheses, ( ), and you must include the parentheses.
- Where you can choose from two or more keywords, the choices are stacked one above the other. If one choice within the stack lies on the main path, you must choose a keyword. In the following example you must choose either BACKUP, DUMP, or MIGRATION.

```
►►──┬─BACKUP──────┬──────────────────────────────────────────────────►◄
    ├─DUMP────────┤
    └─MIGRATION───┘
```

- If one or more keywords are below the main path, they are optional. In the following example, DAILY and SPILL are optional keywords. You can choose one or the other, or none.

```
►►──┬──────┬──────────────────────────────────────────────────────────►◄
    ├─DAILY─┤
    └─SPILL─┘
```

- If a stack of keywords are below the main path and one keyword is above the main path, the use of the keyword is optional, and the above item is the default. In the following example, if no keywords are specified, the default is SYSOUT.

```
    ┌─SYSOUT──────────────────┐
►►──┼─────────────────────────┼──────────────────────────────────────►◄
    ├─┬─OUTDATASET─┬─(dsname)─┤
    │ └─ODS────────┘          │
    ├─SYSOUT─┬──────────┬─────┤
    │        └─(class)─┘     │
    └─TERMINAL──────────────┘
```

- The repeat symbol is shown below:

```
┌─┐
▼ │
```

The repeat symbol appearing above keywords and variables indicates that you can specify those keywords and variables more than once. If a comma appears in the repeat symbol, you must separate repeated keywords or variables with a comma or any valid separator.

For example, after the keyword VOLUMES, you can enter multiple volume serial numbers separated by commas.

```
                  ┌─,─────┐
                  ▼       │
►►──VOLUMES──(──────volser──────)──────────────────────────────────────────►◄
```

- Substitution blocks are used to simplify the diagrams. They indicate that blocks of the syntax diagram are located outside of the main diagram. You insert the keywords for that block where the symbol appears, and return to the main diagram to continue with the command.

  In the following example the substitution block, Fragment A, points to a block of the syntax diagram that immediately follows the BACKUP keyword.

```
►►──ADDVOL──volser──UNIT(unittype)──BACKUP──┬──────────────────┬──────────────►◄
                                            └─┤ Fragment A ├─┘
```

A: BACKUP Optional Parameters:

```
├──(──┬──────────────────┬──)──┬──────────────────────┬──────────────────────┤
      ├─DAILY──┬──────┬──┤     └─THRESHOLD(thresh1)─┘
      │        └─(day)─┘  │
      └─SPILL──────────────┘
```

The above example is equivalent to the following:

```
►►──ADDVOL──volser──UNIT(unittype)──BACKUP(──┬──────────────────┬──)──────────►
                                             ├─DAILY──┬──────┬──┤
                                             │        └─(day)─┘  │
                                             └─SPILL──────────────┘

►──┬──────────────────────┬──────────────────────────────────────────────────►◄
   └─THRESHOLD(thresh1)─┘
```

Chapter 2. ABACKUP: Backing Up Aggregated Data Sets

```
►►──ABACKUP──agname──┬─EXECUTE─┬──┬──────────────────┬─────────────────────────────────────►
                     └─VERIFY──┘  └─UNIT(unittype)─┘

►──┬──────┬──┬──────────────────────────────────────┬───────────────────────────────────────►
   └─MOVE─┘  └─┬─FILTEROUTPUTDATASET─┬─(dsname)─┘
               └─FODS────────────────┘

►──┬──────────────────────────────────────────────────────────┬──┬──────────┬──────────────►
   └─┬─PROCESSONLY─┬─(─┬─┬─LEVEL0─┬─────────────────┬─)─┘  ├─STACK───┤
     └─PONLY───────┘   │ └─L0─────┘                 │       └─NOSTACK─┘
                       ├─┬─MIGRATIONLEVEL1─┬────────┤
                       │ └─ML1─────────────┘        │
                       ├─┬─MIGRATIONLEVEL2─┬────────┤
                       │ └─ML2─────────────┘        │
                       └─USERTAPE───────────────────┘

►──┬──────────────────┬──┬───────────────────────────────────┬──┬────────────────┬────────►◄
   └─OPTIMIZE(option)─┘  └─SKIP(─┬─NOPPRC─┬─┬─NOXRC─┬─)─┘  └─LIST(SKIPPED)─┘
                                 └─PPRC───┘ └─XRC───┘
```

Notes:

1. SMS must be active on your system before you can issue the ABACKUP command.
2. The SETSYS MAXABARSADDRESSSPACE command determines the number of ABACKUP commands that can run at one time. The maximum number is 64.
3. Only one ABACKUP command for each aggregate group name can process at one time.
4. In a multiple address space for DFSMShsm environment, ABARS commands, like ABACKUP, can only be issued by the host identified as the main host. DFSMShsm ignores the ABARS commands if directed to a host identified as HOSTMODE=AUX.

© Copyright IBM Corp. 1984, 2002

Chapter 3. ADDVOL: Adding or Changing the Volumes that DFSMShsm Manages or Owns

```
►►─ADDVOL─volser─UNIT(unittype)──────────────────────────────────►

►─┬─BACKUP──┬──────────┬──────────────────────────────────────────►◄
  │         └─Fragment A─┘                                         │
  ├─DUMP────┬──────────┬──────────────────────────────────────────│
  │         └─Fragment B─┘                                         │
  ├─MIGRATION(──┬──────────┬──────────)──────────────────────────│
  │             └─Fragment C─┘                                     │
  └─PRIMARY(────┬──────────┬──────────)──┬──────────────────────────┘
                └─Fragment D─┘            └─THRESHOLD(──┬─┬─100──────┬─┬──────────)─┘
                                                        │ └─thresh1──┘ │
                                                        └─┬─0──────┬───┘
                                                          └─thresh2──┘
```

A: BACKUP Optional Parameters:

```
├─(──┬──────────────────────────┬──)──┬──────────────────────────┬──────────────────────────┤
    ├─DAILY──┬──────────────────┬─┤   └─THRESHOLD(thresh1)──────┘
    │        └─(day)────────────┘ │
    └─SPILL───────────────────────┘
```

B: DUMP Optional Parameters:

```
├─(──┬──────────────────────────┬──)──┬──────────────────────────┬──────────────────────────┤
    ├─┬─DUMPCLASS─┬──(class)────┬─┤   └─DENSITY(──┬─2─┬──)──────┘
    │ └─DCLASS────┘             │ │               ├─3─┤
    └─SPILL───────────────────────┘                 └─4─┘
```

C: MIGRATION Optional Parameters:

```
                                                  ┌─NODRAIN─┐   ┌─MIGRATIONLEVEL1──────┐
├──┬──────────────────────────────────────────────┤         ├───┤                      ├──►
   │                          ┌──────────┐        └─DRAIN───┘   ├─┬─MIGRATIONLEVEL1─┬──┤
   ├─┬─AUTODUMP─┬──(──┬─class─┬──)──┤              │           │ └─ML1─────────────┘  │
   │ └─AD───────┘     ▼       ┘     │              │           └─┬─MIGRATIONLEVEL2─┬──┘
   └─┬─NOAUTODUMP─┬──────────────────┘              │             └─ML2─────────────┘
     └─NOAD───────┘                                 │
```

© Copyright IBM Corp. 1984, 2002

```
  ┌─NOOVERFLOW─┐
►─┼────────────┼──┬──────────────────────────────┬──┬──────────────────┬──────────────────┤
  └─OVERFLOW───┘  ├─┬─SMALLDATASETPACKING─┬───┤  └─THRESHOLD(thresh1)─┘
                  │ └─SDSP───────────────┘   │
                  └─┬─NOSMALLDATASETPACKING─┬─┘
                    └─NOSDSP──────────────┘
```

D: PRIMARY Optional Parameters:

```
  ┌─NOAUTOBACKUP───────┐  ┌─NOAUTODUMP──────────────────┐  ┌─AUTOMIGRATION──────┐
├─┼────────────────────┼──┼─────────────────────────────┼──┼────────────────────┼──────►
  ├─┬─AUTOBACKUP─┬───┤  │                ┌─,───┐      │  ├─┬─AUTOMIGRATION─┬───┤
  │ └─AB─────────┘   │  │                ▼     │      │  │ └─AMIG──────────┘   │
  └─┬─NOAUTOBACKUP─┬─┘  ├─┬─AUTODUMP─┬──(──class──┴──)─┤  └─┬─NOAUTOMIGRATION─┬─┘
    └─NOAB─────────┘    │ └─AD───────┘                  │    └─NOAMIG─────────┘
                        └─┬─NOAUTODUMP─┬──────────────┘
                          └─NOAD───────┘
```

```
  ┌─AUTORECALL─────────┐
►─┼────────────────────┼──┬──────────────────────────────────────────────────────────────────────►
  ├─┬─AUTORECALL─┬───┤  └─┬─BACKUPDEVICECATEGORY─┬──(──┬─TAPE─┬──)─┘
  │ └─AREC───────┘   │    └─BUDEVCAT──────────────┘    ├─DASD─┤
  └─┬─NOAUTORECALL─┬─┘                                 └─NONE─┘
    └─NOAREC───────┘
```

```
  ┌─MIGRATE──────────────────────────┐
►─┼──────────────────────────────────┼──────────────────────────────────────────────────────────────────────┤
  ├─┬─DELETEBYAGE─┬──(days)──────────┤
  │ └─DBA─────────┘                  │
  ├─┬─DELETEIFBACKEDUP─┬──(days)──────┤
  │ └─DBU────────────┘               │
  └─MIGRATE──┬─────────┬──────────────┘
             └─(days)──┘
```

Notes:

1. If more than one of the optional subparameters are used in one ADDVOL command, they are placed within one set of parentheses with a space between each subparameter, as shown below:

   ```
   ADDVOL PRIM01 UNIT(3390) +
   PRIMARY(AUTOBACKUP MIGRATE(8) AUTORECALL) THRESHOLD(90 70)
   ```

2. The required parameters BACKUP, DUMP, MIGRATION, and PRIMARY are volume-type parameters; that is, they specify the type of volume to be managed by DFSMShsm.
3. The ADDVOL command cannot be used with SMS-managed volumes.

Chapter 4. ALTERDS: Changing the Parameters that Affect the Backup of Non-SMS-Managed Data Sets

```
                 ┌──────────┐
                 ▼          │
►►──ALTERDS──────dsname──┬──────────────────────┬──┬──────────────────────┬──────────────────►◄
                         ├─FREQUENCY(days)──┤  ├─VERSIONS(limit)──┤
                         └─SYSFREQUENCY─────┘  └─SYSVERSIONS─────┘
```

Note: You can specify VERSIONS or SYSVERSIONS, FREQUENCY or SYSFREQUENCY, or a combination of these parameters with the ALTERDS command, but you must specify at least one parameter with the ALTERDS command to change the backup parameters.

© Copyright IBM Corp. 1984, 2002

Chapter 5. ARECOVER: Recovering a Specified Aggregate Group

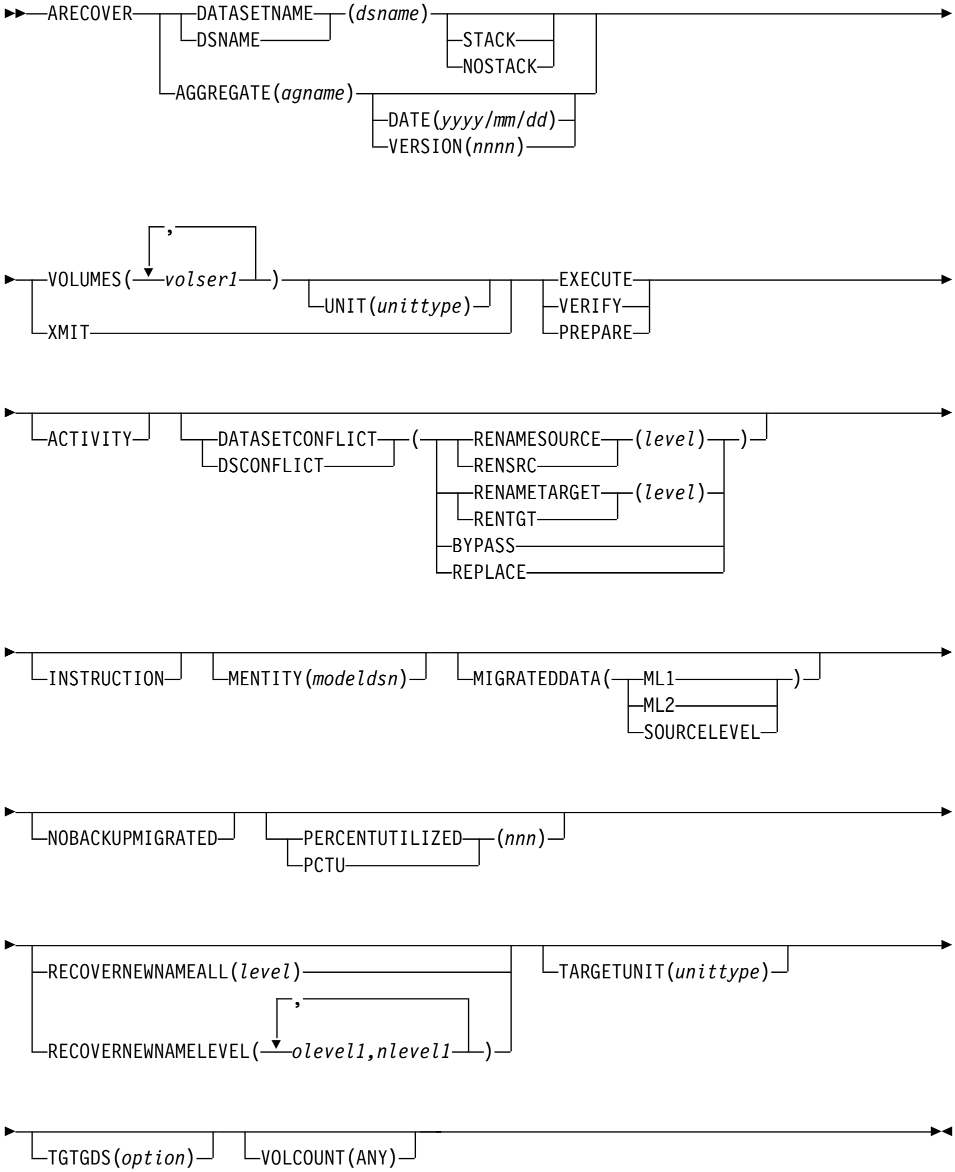

© Copyright IBM Corp. 1984, 2002

Notes:

1. The SETSYS MAXABARSADDRESSSPACE parameter determines the number of ARECOVER commands that can run at one time. The maximum number is 64.
2. DFSMShsm can process only one ARECOVER command for each control file data set name or aggregate group at one time.
3. The volumes must be listed in the order that they are to be mounted or the command fails.
4. Issuing ARECOVER with AGGREGATE requires that ARECOVER DATASETNAME be issued previously using the PREPARE parameter.
5. In a multiple address space for DFSMShsm environment, ABARS commands, like ARECOVER, can only be issued by the host identified as the main host. DFSMShsm ignores the ABARS commands if directed to a host identified as HOSTMODE=AUX.

Chapter 6. AUDIT: Command Syntax for the Enhanced AUDIT Commands

```
>>--AUDIT--+-ABARSCONTROLS--+-------------------+-------------------------------------+-------->
           |                 +-| Fragment A |-+                                     |
           |-+-DATASETCONTROLS-+--(--+-MIGRATION-+--)--+-------------------+-------+
           | +-DSCTL-----------+     +-BACKUP----+     +-| Fragment B |-+       |
           |                                           +-------+                   |
           |                                           |       |                   |
           |                                           |       |                   |
           |-+-DIRECTORYCONTROLS VOLUMES-+--(--+-volser-+--)--+-------------------+-+
           | +-DIRCTL VOLUMES------------+                   +-| Fragment C |-+   |
           |-+-MEDIACONTROLS-+-| Fragment D |-------------------------------------+
           | +-MEDCTL--------+                                                     |
           |-+-VOLUMECONTROLS-+--(BACKUP)--+-------------------+-------------------+
           | +-VOLCTL---------+            +-| Fragment E |-+                   |
           +-+-VOLUMECONTROLS-+--(--+-MIGRATION-+--)--+-------------------+-------+
             +-VOLCTL---------+     +-RECOVERABLE-+     +-| Fragment F |-+       |
```

A: ABARSCONTROLS Optional Parameters:

```
                  +-SYSOUT-------------------+  +-REPORT (ERRORS)-+
|--+-------------+-+-------------------------+--+-------------------+-------------->
   +-(agname)-+   +-+-OUTDATASET-+-(dsname)-+
                  | +-ODS---------+         |
                  +-SYSOUT-+-------+-------+
                           +-(class)-+
```

```
>-+-------------------------------------+-------------------------------------------|
   |                 +-DYNAMIC-+        |
   +-SERIALIZATION(--+-CONTINUOUS-+-)-+
```

B: DATASETCONTROLS Optional Parameters:

```
|--+-------------------------------------+--+-------------------+-------------------|
   |                 +-------+           |  +-| Fragment C |-+
   |                 |       |           |
   |-+-DATASETNAMES-+-(--+-dsname-+--)-+
   | +-DSNAME-------+                   |
   |-LEVELS-+-------------------+-------+
   |        |                   |       |
   |        |  +-------+        |       |
   |        +-(--+-qualifier-+--)-+       |
   +-RESUME-------------------------------+
```

© Copyright IBM Corp. 1984, 2002

C: Additional Optional Parameters:

```
├─┬─NOFIX─┬─┬─SYSOUT──────────────┬─┬─REPORT(ERRORS)─┬──────────────────────►
  └─FIX───┘ ├─OUTDATASET─┬─(dsname)─┤ └────────────────┘
            │ └─ODS──────┘          │
            └─SYSOUT─┬──────────────┘
                     └─(class)──────┘

►──┬──────────────────────────────────────────────────────────────────────┤
   └─SERIALIZATION(─┬─DYNAMIC────┬─)─┘
                    └─CONTINUOUS─┘
```

D: MEDIACONTROLS Parameters:

```
├──┬──────────────────────────────┬─VOLUMES(──┬──────┬──▼──volser──┬─)──┬──────────────────┬──────────────┤
   └─(─┬─SMALLDATASETPACKING─┬─)─┘           │      │              │   └─┤ Fragment C ├─┘
       └─SDSP──────────────┘                 └──────┘              │
                                                                   │
```

E: VOLUMECONTROLS(BACKUP) Optional Parameters:

```
├──┬──────────────────────────────────────────────────────────────┬──┬──────────────────┬──────────────┤
   │                                                              │  └─┤ Fragment C ├─┘
   │                                  ┌──────┬──▼──volser──┬─)──┬──┤
   ├─VOLUMES(──┬──────┬──▼──volser──┬─)──┤      │              │   │
   │           │      │              │   │      │              │   │
   └─BACKUPTYPE─┬─(─┬─DAILY──┬──────┬─┬─)──┘      │              │   │
     └─BTYPE────┘   │        │      │ │          │              │   │
                    │        └─(day)─┘ │          │              │   │
                    ├─SPILL────────────┤          │              │   │
                    └─ALL──────────────┘          │              │   │
```

F: VOLUMECONTROLS(MIGRATION | RECOVERABLE) Optional Parameters:

```
├──┬──────────────────────────────────────────────────────────────┬──┬──────────────────┬──────────────┤
   │                                  ┌──────┬──▼──volser──┬─)──┬──┤ └─┤ Fragment C ├─┘
   │                                  │      │              │   │  │
   └─VOLUMES─(──┬──────┬──▼──volser──┬─)──┘      │              │   │
                │      │              │          │              │   │
                └──────┘              │          │              │   │
```

Chapter 7. AUDIT: Command Syntax for the Original AUDIT Commands

```
►►─AUDIT──┬─ALL──────────────────────────────────────────────────────────────►◄
          │     └─┤ Fragment G ├─┘
          ├─┬─BACKUPTYPE─┬─┤ Fragment H ├──────────────────────────────────────
          │ └─BTYPE──────┘
          ├─┬─┬─BACKUPCONTROLDATASET─┬──────────────────────────┬─┤ Fragment J ├─┘
          │ │ └─BCDS─────────────────┘                          │
          │ ├─MIGRATIONCONTROLDATASET─┬──────────────────────────┤
          │ │ └─MCDS────────────────────┘                          │
          │ └─OFFLINECONTROLDATASET─┬─┤ Fragment I ├─┘
          │   └─OCDS────────────────┘
          ├─┬─BACKUPVOLUMES─┬──────────────────────────────────────────────────
          │ └─BVOL──────────┘
          │                 │   ┌──────────┐   │   └─┤ Fragment J ├─┘
          │                 └─(─▼─volser───┴─)─┘
          │
          ├─┬─DATASETNAMES─┬─(─┬──────────┬─▼─dsname─┴─)──────────────────────
          │ └─DSNAME───────┘   └──────────┘                └─┤ Fragment K ├─┘
          │
          ├─LEVELS─(─┬──────────┬─▼─qualifier─┴─)──────────────────────────────
          │          └──────────┘                  └─┤ Fragment J ├─┘
          ├─┬─┬─MASTERCATALOG─┬──────────────────────────────────────────────
          │ │ └─MCAT──────────┘                   │   └─┤ Fragment L ├─┘
          │ └─USERCATALOG─┬─(catname)─┘
          │   └─UCAT──────┘
          └─VOLUMES──────────────────────────────────────────────────────────
                            │   ┌──────────┐   │   └─┤ Fragment J ├─┘
                            └─(─▼─volser───┴─)─┘
```

G: ALL Optional Parameters:

```
├─┬─NOFIX─┬─┬─SYSOUT──────────────────┬──────────────────────────────────────►
  │ └─FIX───┘ │                         │                                      │
  │           ├─┬─OUTDATASET─┬─(dsname)─┤                                      │
  │           │ └─ODS────────┘           │                                      │
  │           └─SYSOUT─┬──────────┬─────┘                                      │
  │                    └─(class)──┘                                            │
  │                                                                            │
  │                                                  ┌─ERRORS─┐               │
  │                                                  │        │               │
  │                                                  └─ALL────┘               │
  │                                                  │        │               │
  │                                                  └─REPORT(─┴─────────────)─┘

►─┬─SERIALIZATION (CONTINUOUS)─┬──────────────────────────────────────────────┤
  │                            │                                              │
```

© Copyright IBM Corp. 1984, 2002

H: BACKUPTYPE Parameters:

```
├──(──┬─DAILY──┬──────┬──┬─)──┬─────────────────┬──────────────────────────────┤
      │        └─(day)─┘  │   └─┤ Fragment J ├─┘
      ├─SPILL─────────────┤
      └─ALL───────────────┘
```

I: OFFLINECONTROLDATASET Parameters:

```
├──┬──────────────────────────────────────────────────────────────────────────┤
   └─(──┬─DAILY──┬──────┬──┬─)─┘
        │        └─(day)─┘  │
        ├─ML2───────────────┤
        ├─SPILL─────────────┤
        └─ALL───────────────┘
```

J: Additional Optional Parameters:

```
   ┌─NOFIX─┐  ┌─SYSOUT──────────────────┐
├──┼───────┼──┼─────────────────────────┼──┬──────────────────────────┬──────────►
   └─FIX───┘  ├─┬─OUTDATASET─┬─(dsname)─┤  │          ┌─ERRORS─┐      │
              │ └─ODS────────┘          │  └─REPORT(──┴─ALL────┴─)─┘
              ├─SYSOUT──┬──────────┬────┤
              │         └─(class)─┘    │
              └─TERMINAL──────────────┘

   ┌─SERIALIZATION (CONTINUOUS)─┐
►──┴────────────────────────────┴──────────────────────────────────────────┤
```

K: DATASETNAMES Optional Parameters:

```
   ┌─NOFIX─┐  ┌─SYSOUT──────────────────┐
├──┼───────┼──┼─────────────────────────┼──────────────────────────────────────►
   └─FIX───┘  ├─┬─OUTDATASET─┬─(dsname)─┤
              │ └─ODS────────┘          │
              ├─SYSOUT──┬──────────┬────┤
              │         └─(class)─┘    │
              └─TERMINAL──────────────┘

                   ┌─SERIALIZATION (CONTINUOUS)─┐
►──┬───────────────┬────────────────────────────┴──────────────────────────────┤
   └─REPORT(ALL)─┘
```

L: MASTERCATALOG | USERCATALOG Optional Parameters:

```
                 ┌─SYSOUT──────────────────┐
├──┬──────────┬──┼──────────────────────────┼──┬──────────────────────────┬──────────────────────────────────────────────►
   └─NOFIX─────┘  ├─┬─OUTDATASET─┬─(dsname)─┤  │          ┌─ERRORS─┐      │
                  │ └─ODS────────┘          │  └─REPORT(──┴─ALL────┴─)──┘
                  └─SYSOUT─┬──────────┬──────┘
                           └─(class)──┘

  ┌─SERIALIZATION (CONTINUOUS)─┐
►─┴────────────────────────────┴──────────────────────────────────────────────────────────────────────────────────────┤
```

Chapter 8. AUTH: Identifying Authorized DFSMShsm Users

```
                                                  ┌─USER───┐
►►──AUTH──userid──┬─┬─DATABASEAUTHORITY─┬─(─┼────────┼─)─┬──────────────────────────►◄
                  │ └─DBA───────────────┘   └─CONTROL─┘   │
                  └─REVOKE──────────────────────────────────┘
```

© Copyright IBM Corp. 1984, 2002

Chapter 9. BACKDS: Backing Up a Specific Data Set

```
►►──BACKDS──dsname──┬──────────────────────────────────────────────────────────►
                    │  ┌─STANDARD──┐  ┌─PHYSICALEND─┐  │
                    └─TARGET(─┬─DASD─┬─)─┘  └─CC(─┬──────────┬─┬─────────────┬─)─┘
                              └─TAPE─┘            ├─PREFERRED─┤ ├─LOGICALEND──┤
                                                  └─REQUIRED──┘ ├─LE──────────┤
                                                                ├─PHYSICALEND─┤
                                                                └─PE──────────┘

►──┬──────────────────────────────────────────────────────────────────────►◄
   └─UNIT(unittype)──VOLUME(volser)─┘
```

Note: The UNIT and VOLUME parameters do not apply either to SMS-managed data sets or to cataloged data sets.

© Copyright IBM Corp. 1984, 2002

Chapter 10. BACKVOL: Backing Up Data Sets from a Volume, Dumping Volumes, or Backing Up the Control Data Sets (SMS-Managed Volumes)

```
►►─BACKVOL──┬─CONTROLDATASETS─┬──┬─Fragment A─┬──┬─Fragment B─┬──────────────────►◄
            └─CDS────────────┘  └────────────┘  └────────────┘
            │                 ┌─,─┐
            ├─VOLUMES(──────▼─volser──)──┬─Fragment C─┬──┬─DUMP──┬──────────────┬──┤
            │                            └────────────┘  └───────┘ └─Fragment D─┘  │
            │                 ┌─,─┐                                                │
            └─STORAGEGROUP──┬─(──▼─sgn──)──┬─Fragment C─┬──┬─DUMP──┬──────────────┬──┘
              ├─SG──────────┤              └────────────┘  └───────┘ └─Fragment D─┘
              ├─SGROUP──────┤
              └─STRGRP──────┘
```

A: CONTROLDATASETS Optional Backup Parameters:

```
├──┬──────────────────────────────────────────────────────────────────────────────►
   └─(BACKUPDEVICECATEGORY(──┬─DASD──────────────────────────────────────────────┬))─┘
                             └─TAPE──┬──────────────────────────────────────────┬──┘
                                     └─(──┬─PARALLEL──────────────────────────────┬)─┘
                                          └─NOPARALLEL────────────────────────────┘

►──┬──────────────────────────────────────────────────────────────────────────────┤
   └─(DATAMOVER(──┬─HSM──┬))─┘
                  └─DSS──┘
```

B: CONTROLDATASETS Optional Backup Parameters:

```
├──┬──────────────────────────────┬──────────────────────────────────────────────┤
   └─(NULLJOURNALONLY)────────────┘
```

C: STORAGEGROUP | VOLUMES Optional Backup Parameters:

```
                                                ┌─INCREMENTAL─┐
├──┬──────────────────────────────────────────┬──┬─────────────┬──┬──────────────┬──┤
   └─BACKUPDEVICECATEGORY(──┬─DASD──┬──)──┘  └─TOTAL───────┘  └─TERMINAL─┘
                            └─TAPE──┘
```

D: DUMP Optional Parameters:

© Copyright IBM Corp. 1984, 2002

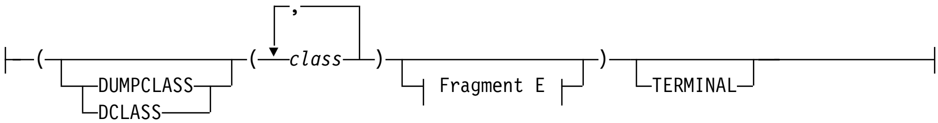

E: DUMP Optional Parameters:

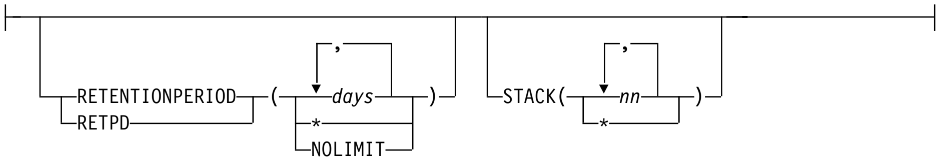

Chapter 11. BACKVOL: Backing Up Data Sets from a Volume, Dumping Volumes, or Backing Up the Control Data Sets (Non-SMS-Managed Volumes)

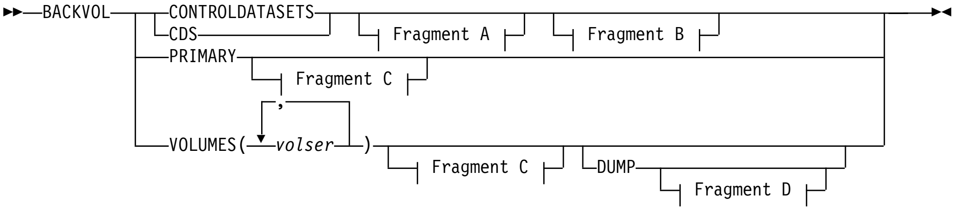

A: CONTROLDATASETS Optional Backup Parameters:

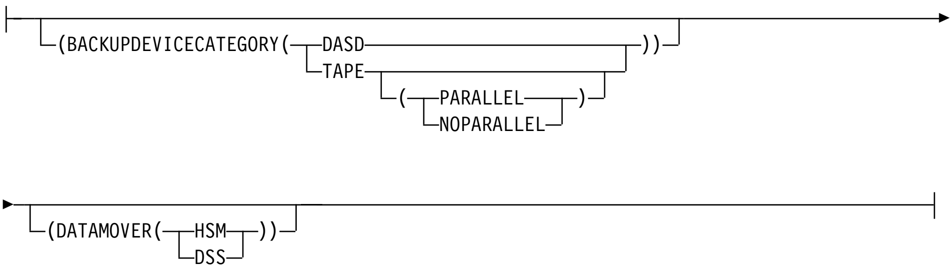

B: CONTROLDATASETS Optional Backup Parameter:

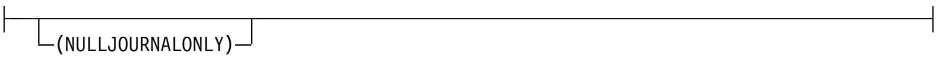

C: PRIMARY | VOLUMES Optional Backup Parameters:

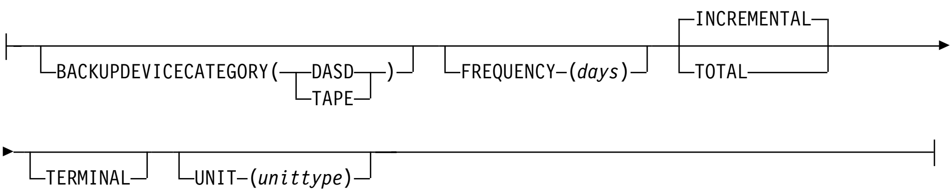

D: DUMP Optional Parameters:

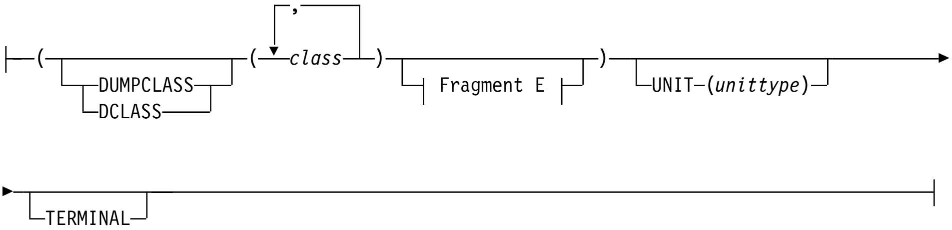

E: DUMP Optional Parameters:

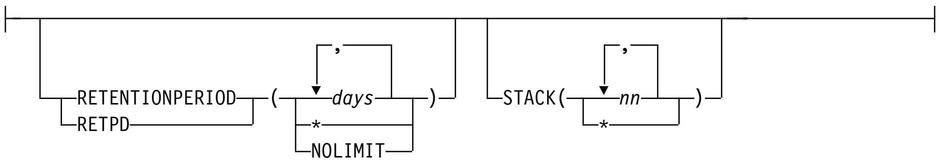

Chapter 12. BDELETE: Deleting Backup Versions of a Data Set

```
                  ┌──────────┐
►►──BDELETE──(──┴─dsname─┴─)──┬──────────────────────┬──┬──────────────────────┬──────────►◄
                              └─FROMVOLUME(volser)─┘  │                      │
                                                      └─VERSIONS(──┴─bvn─┴─)─┘
```

Note: The FROMVOLUME parameter does not apply to either SMS-managed data sets or to cataloged data sets.

© Copyright IBM Corp. 1984, 2002

Chapter 13. CANCEL: Canceling a Queued DFSMShsm Request

```
►►──CANCEL──┬──────────────────────────┬──────────────────────────────────────►◄
            ├─┬─DATASETNAME─┬─(dsn)─┤
            │ └─DSNAME──────┘       │
            ├─REQUEST(num)──────────┤
            └─USERID(userid)────────┘
```

Note: Although the CANCEL command has no required parameters, specify at least one optional parameter with the CANCEL command.

© Copyright IBM Corp. 1984, 2002

Chapter 14. DEFINE: Defining Control Structures for Use by DFSMShsm

```
►►──DEFINE──┬──────────────────────────────────────────────────────────────────────────────►
            └─ARPOOL(──┬─agname──┬─┬──────────────────┬─)─┘
                       └─*───────┘ └─┤ Fragment A ├─┘

►─┬──────────────────────────────────────────────────────────────────────────────────────────►
  └─BACKUP──┬──────────────────────────────────────────────────────────────────────────┬─┘
            └─(cycle──┬─────────┬─┬──────────────────────────────────────────────────┬─)─┘
                      └─bvols───┘ └─CYCLESTARTDATE──┬──────────────────────────┬─┘
                                                    └─(yyyy/mm/dd)─┘

►─┬──────────────────────────────────────────────────────────────────────────────────────────►
  └─┬─DUMPCLASS──┬─(─class──┬──────────────────────┬─)─┘
    └─DCLASS─────┘          └─┤ Fragment B ├─┘

►─┬──────────────────────────────────────────────────────────────────────────────────────────►
  └─┬─DUMPCYCLE──┬─┬──────────────────────────────────────────────────────────────────┬─┘
    └─DCYCLE─────┘ └─(cycle──┬──────────────────────────────────────────────────────┬─)─┘
                             └─CYCLESTARTDATE──┬──────────────────────────┬─┘
                                               └─(yyyy/mm/dd)─┘

►─┬──────────────────────────────────────────────────────────────────────────────────────────►
  ├─┬─MIGRATIONCLEANUPCYCLE──┬──┬──────────────────────────────────────────────────────────┬─┤
  │ └─MIGCC──────────────────┘  └─(cycle──┬──────────────────────────────────────────────┬─)─┘
  │                                       └─CYCLESTARTDATE──┬──────────────────────────┬─┘
  │                                                         └─(yyyy/mm/dd)─┘
  └─┬─SECONDARYSPMGMTCYCLE──┬──┬──────────────────────────────────────────────────────────┬─┘
    └─SSMCYCLE──────────────┘  └─(cycle──┬──────────────────────────────────────────────┬─)─┘
                                         └─CYCLESTARTDATE──┬──────────────────────────┬─┘
                                                           └─(yyyy/mm/dd)─┘

►─┬──────────────────────────────────────────────────────────────────────────────────────────►
  └─┬─MIGRATIONLEVEL2──┬──┬──────────────────────────────────────────────────────────────┬─┘
    └─ML2──────────────┘  └─(──┬──────────────────────┬─┬──────────────────────────────┬─)─┘
                               │       ┌─────┐        │ │          ┌─────┐             │
                               └─KEYS(──▼─key──┴─)─┘ └─VOLUMES(──▼─volser──┴─)─┘

►─┬──────────────────────────────────────────────────────────────────────────────────────────►
  └─POOL(poolid──┬──────────────────────────────────┬─)─┘
                 │          ┌─────┐                 │
                 └─VOLUMES─(──▼─volser──┴─)─┘
```

© Copyright IBM Corp. 1984, 2002

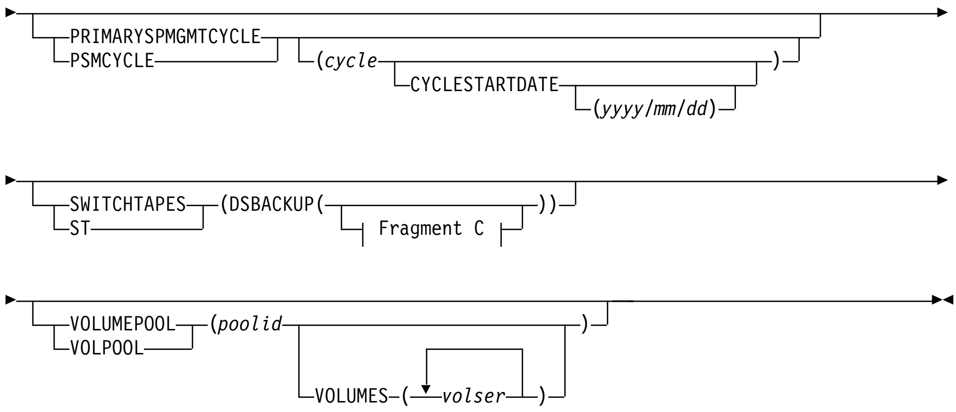

A: ARPOOL Optional Parameters:

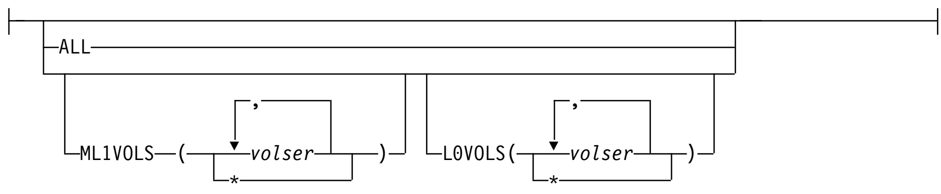

B: DUMPCLASS Optional Parameters:

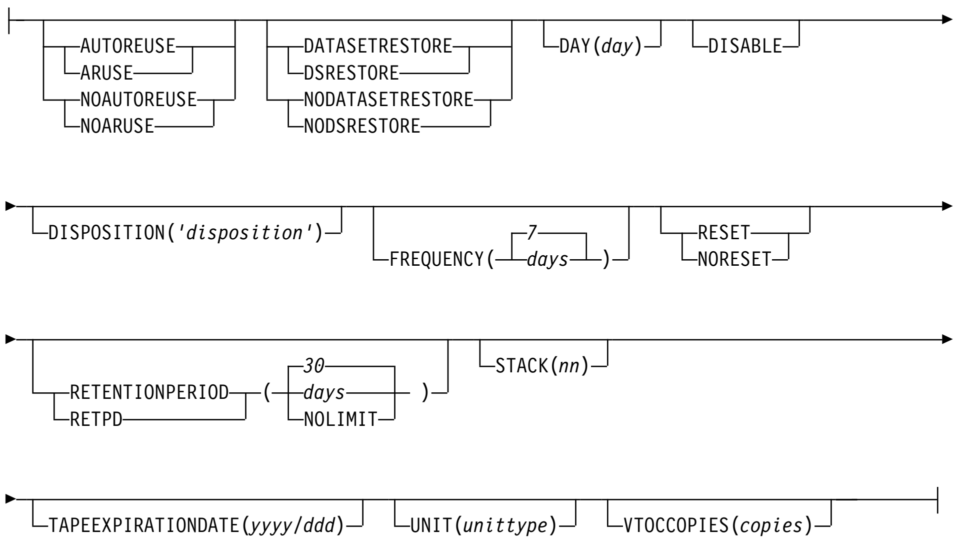

C: SWITCHTAPES Optional Parameters:

```
├──┬──────────────────────────────┬──┬──────────────────────────────────┬──────────────────────────────┤
   │           ┌─0────┐           │  │                ┌─MARKFULL─┐        │
   └─┬─TIME(─┴─hhmm─┴─)─┬─┘  └─PARTIALTAPE(─┼─SETSYS───┼─)─┘
     └─┬─AUTOBACKUPEND─┬─┘                └─REUSE───┘
       └─ABE───────────┘
```

Note: You must specify at least one of the optional parameters with each DEFINE command.

Chapter 15. DELETE: Deleting a Migrated Data Set from a Migration Volume

```
►►──DELETE──dsname──┬──────────┬──────────────────────────────────────────►◄
                    └─PURGE─┘
```

© Copyright IBM Corp. 1984, 2002

Chapter 16. DELVOL: Removing a Volume from the List of Volumes that DFSMShsm Manages or Owns

```
►►──DELVOL──volser──┬─BACKUP──┬──────────────┬──┬──────────────────────────►◄
                    │         └─┤ Fragment A ├─┘  │
                    ├─DUMP──┬──────────────┬──────┤
                    │       └─┤ Fragment B ├─┘    │
                    ├─MIGRATION──┬──────────────┬─┤
                    │            └─┤ Fragment A ├─┘ │
                    └─PRIMARY──────────────────────┘
```

A: BACKUP | MIGRATION Optional Parameters:

```
├──┬──────────────────┬──────────────────────────────────────────────────┤
   │   ┌─UNASSIGN─┐   │
   └─(─┼─MARKFULL─┼─)─┘
       └─PURGE────┘
```

B: DUMP Optional Parameters:

```
├──┬──────────────────┬──┬──────────────┬──────────────────────────────┤
   │   ┌─UNASSIGN─┐   │  └─(──LASTCOPY──)─┘
   └─(─┼─PURGE────┼─)─┘
       └─REASSIGN─┘
```

Notes:

1. If you specify the LASTCOPY, MARKFULL, PURGE, REASSIGN, or UNASSIGN subparameter of the BACKUP, DUMP, or MIGRATION parameter, you must put parentheses around the subparameter.
2. If the volume serial number is for an SMS-managed volume, only the PRIMARY parameter applies.
3. If a DELVOL MIGRATION command is used to delete a migration volume while the secondary space management function is running, the DELVOL MIGRATION command fails.

© Copyright IBM Corp. 1984, 2002

Chapter 17. EXPIREBV: Deleting Unwanted Backup Versions of Data Sets

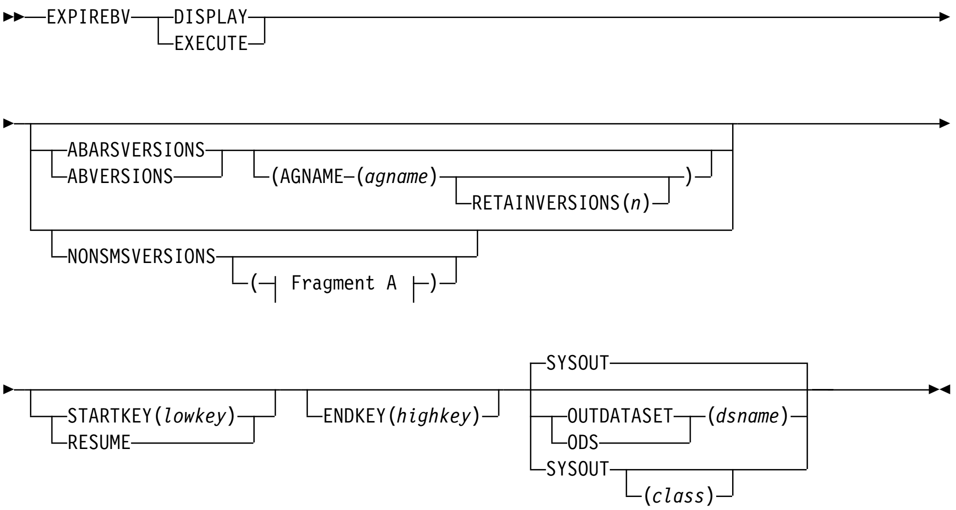

A: NONSMSVERSIONS Optional Parameters:

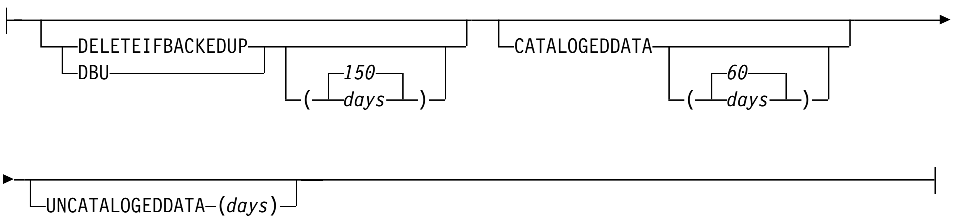

Note: The NONSMSVERSIONS parameter does not apply to SMS-managed data sets.

© Copyright IBM Corp. 1984, 2002

Chapter 18. FREEVOL: Freeing DFSMShsm-Owned Volumes

```
►►──FREEVOL──┬─┬─MIGRATIONVOLUME─┬─(volser)─┤ Fragment A ├─┬──────────────────────►◄
             │ └─MVOL────────────┘                           │
             ├─┬─BACKUPVOLUME─┬─(volser)─┤ Fragment B ├───┤
             │ └─BVOL─────────┘                             │
             └─ML1BACKUPVERSIONS──────────────────────────────┘
```

A: MIGRATIONVOLUME Optional Parameters:

```
├─┬──────────────────────┬─┬─────────────────────────────────────────────────────┬─────┤
  │       ┌─0──────┐     │ └─TARGETLEVEL(─┬─┬─MIGRATIONLEVEL1─┬──────────────┬─)─┘
  └─AGE(──┴─days───┴─)─┘                  │ └─ML1────────────┘              │
                                          └─┬─MIGRATIONLEVEL2─┬─(─┬─TAPE─┬─)─┘
                                            └─ML2────────────┘   └─DASD─┘
```

B: BACKUPVOLUME Optional Parameters:

```
├─┬──────────────────────┬─┬─────────────────────────────────────────────────────►
  │       ┌─0──────┐     │ └─TARGETLEVEL(─SPILL─(─┬─TAPE─┬─)─)─┘
  └─AGE(──┴─days───┴─)─┘                          └─DASD─┘

►─┬──────────────────────┬──────────────────────────────────────────────────────┤
  └─RETAINNEWESTVERSION─┘
```

© Copyright IBM Corp. 1984, 2002

Chapter 19. HOLD: Preventing All or Some DFSMShsm Functions from Running

```
►►──HOLD──┬──────────────────────────────────────────┬──────────────────────────────────►
          └─ABACKUP──┬──────────────┬──┬──────────┬──┘
                     └─(agname)─────┘  └─EOD──────┘

►─┬─────┬──┬─────────────────────────────────────────────────────────────────────────────┬──►
  └─ALL─┘  └─ARECOVER──┬──────────────────────────────────────────┬──┬──────────┬──┘
                       ├─AGGREGATE(agname)──────────────────────┤  └─EOD──────┘
                       └─DATASETNAME(controlfiledsn)────────────┘

►─┬─────────┬──┬──────────────────┬──────────────────────────────────────────────────────►
  └─AUDIT───┘  ├─AUTOMIGRATION────┤
               └─AMIG────────────┘

►─┬──────────────────────────────────────────────────────────────────────────────────────┬──►
  └─BACKUP──(──┬──────────┬──┬──────────────────────────────────────────────┬──)──┘
               └─AUTO─────┘  └─DSCOMMAND(──┬──────────────────┬──)──┘
                                           ├─DASD─────────────┤
                                           ├─TAPE─────────────┤
                                           └─SWITCHTAPES──────┘

►─┬──────────────────────────────────────────────────────────────────────────────────────┬──►
  └─┬─COMMONQUEUE──┬──┬──────────────────────────────────────────────────────────────┬──┘
    └─CQUEUE───────┘  └─(RECALL──┬──────────────────────────────────────────────────┬──)──┘
                                 └─(──┬──────────────┬──┬──────────────┬──)──┘
                                      └─PLACEMENT────┘  └─SELECTION────┘

►─┬──────────────────────┬──┬──────────────────────┬──┬──────────────┬──┬──────────┬──┬──────────┬──►
  └─DUMP──┬──────────┬──┘  ├─┬─ENDOFDATASET─────┬─┤  └─EXPIREBV────┘  └─LIST─────┘  └─LOG──────┘
          └─(AUTO)───┘     │ └─EOD──────────────┘ │
                           └─┬─ENDOFVOLUME──────┬─┘
                             └─EOV──────────────┘

►─┬──────────────────────────┬──┬──────────────────────────────────────────────────────┬──►
  └─MIGRATION──┬──────────┬──┘  └─RECALL──┬──────────────────────────────────┬──┘
               └─(AUTO)───┘                └─(TAPE──┬──────────┬──)──┘
                                                    └─(TSO)────┘
```

© Copyright IBM Corp. 1984, 2002

```
►─┬──────────────────────────────────────────────────────────────────────────────────►
  └─RECOVER──┬──────────────────┬─┘
             └─(TAPEDATASET)─┘

►─┬──────────┬─┬──────────┬─┬──────────┬─┬──────────┬─────────────────────────────►◄
  └─RECYCLE─┘ └─REPORT─┘ └─TAPECOPY─┘ └─TAPEREPL─┘
```

Notes:

1. Although the HOLD command has no required parameters, you must specify at least one optional parameter if you want to prevent a DFSMShsm function from processing.
2. In a multiple address space for DFSMShsm environment, ABARS commands, like HOLD ABACKUP or HOLD ARECOVER, can only be issued by the host identified as the main host. DFSMShsm ignores the ABARS commands if directed to a host identified as HOSTMODE=AUX.
3. The ENDOFDATASET and ENDOFVOLUME optional parameters affect the following optional parameters:
   - AUTOMIGRATION
   - BACKUP | BACKUP(AUTO)
   - DUMP | DUMP(AUTO)
   - MIGRATION | MIGRATION(AUTO)
   - RECOVER | RECOVER(TAPEDATASET)

Chapter 20. HSENDCMD: Issuing DFSMShsm Authorized-User Commands from a TSO Terminal

```
►►──HSENDCMD──┬─NOWAIT─┬──command──────────────────────────────────►◄
              └─WAIT───┘
```

© Copyright IBM Corp. 1984, 2002

Chapter 21. LIST: Listing Information from the MCDS, BCDS, and OCDS

```
►►─LIST──┬─AGGREGATE──┬──────────────────────────────────────────────────────────────────────►◄
         │            └─┤ Fragment A ├─┘
         ├─┬─BACKUPVOLUME─┬──────────┬─┬──────────┬─┬──────────────┬─┘
         │ └─BVOL─────────┘          └─(volser)─┘ └─┤ Fragment C ├─┘
         ├─┬─┬─DATASETNAME─┬──────────┬─┬──────────┬─┬──────────────┬─┘
         │ │ └─DSNAME──────┘          └─(dsname)─┘ │ └─┤ Fragment D ├─┘
         │ └─LEVEL(qualifier)──────────────────────┘
         ├─┬─DUMPCLASS─┬──────────┬─┬──────────────┬─┘
         │ └─DCLASS────┘          └─(class)──────┘ └─┤ Fragment B ├─┘
         ├─┬─DUMPVOLUME─┬──────────┬─┬──────────────┬─┘
         │ └─DVOL───────┘          └─(volser)─────┘ └─┤ Fragment F ├─┘
         ├─HOST─(hostid)──┬──────────┬─┬──────────────┬─┘
         │                └─RESET────┘ └─┤ Fragment B ├─┘
         │ ┌─┬─MIGRATIONVOLUME─┬──────────────────────┬─┐
         │ │ └─MVOL────────────┘                      │ │
         │ │ ┌─┬─MIGRATIONLEVEL1─┬──────────────────┬─┐ │ │
         │ │ │ └─ML1─────────────┘                  │ │ │ │
         │ │ │ ┌─┬─MIGRATIONLEVEL2─┬──────────────┬─┐ │ │ │
         │ │ │ │ └─ML2─────────────┘ ┌─(DASD)──────┐ │ │ │ │
         │ │ │ │                     └─(TAPE)──────┘ │ │ │ │
         │ │ │ │                       └─SELECT(EMPTY)─┘ │ │ │
         │ │ │ └─VOLUME──────────────────────────────┘ │ │ │
         │ │ │       └─(volser)─┘                      │ │ │
         │ │ └─────────────────────────────────────────┘ │ │
         │ │                                             │ │
         │ │                                             └─┤ Fragment H ├─┘
         ├─┬─PRIMARYVOLUME─┬──────────┬─┬──────────────┬─┘
         │ └─PVOL──────────┘          └─(volser)─────┘ └─┤ Fragment I ├─┘
         ├─┬─TAPETABLEOFCONTENTS─┬──────────────────────┬─┬──────────────┬─┘
         │ └─TTOC────────────────┘                      │ └─┤ Fragment J ├─┘
         │                                              └─(volser)─┤ Fragment M ├─┘
         └─USER──┬──────────┬─┬──────────────┬─┘
                 └─(userid)─┘ └─┤ Fragment B ├─┘
```

A: AGGREGATE Optional Parameters:

```
├─(─┬─agname─┬─)──┬─┬─DATE(yyyy/mm/dd)─┬─┬──────────────┬─┬──────────────────────────────┤
   └─*──────┘    │ └─VERSION(nnnn)────┘ └─┤ Fragment B ├─┘
```

B: LIST Optional Parameters:

```
├─┬─SYSOUT──────────────────────┬──────────────────────────────────────────────────────┤
  │                             │
  │ ┌─OUTDATASET─┬─(dsname)─┬─┐
  │ └─ODS────────┘          │ │
  │ ┌─SYSOUT─┬──────────┬─┐ │
  │ │        └─(class)──┘ │ │
  │ └─TERMINAL────────────┘ │
```

© Copyright IBM Corp. 1984, 2002

C: BACKUPVOLUME Optional Parameters:

```
├─┬─────────────┬─┬──────────────┬──────────────────────────────────────┤
  └─┤ Fragment B ├─└─SELECT(EMPTY)─┘
```

D: DATASETNAME Optional Parameters:

```
    ┌─MIGRATIONCONTROLDATASET──────┐
    │                              │
├───┼─┬─BACKUPCONTROLDATASET─────┬─┼─┬──────────────┬─┬─────────────┬─►
    │ │ BCDS─────────────────────│ │ └─INCLUDEPRIMARY─┘ └─┤ Fragment B ├─┘
    │ └─BACKUP───────────────────┘ │
    │ ┌─MIGRATIONCONTROLDATASET──┐ │
    │ │ MCDS─────────────────────│ │
    │ └─MIGRAT───────────────────┘ │
    └─BOTH─────────────────────────┘

►─┬──────────────────────────────┬─┬──────────────┬──────────────────────┤
  └─SELECT(─┬──────────────────┬─)─└─SUMMARY─────┘
            └─┤ Fragment E ├───┘
```

E: DATASETNAME SELECT Optional Parameters:

```
├─┬──────────────────────────────────────────────────────────────────┬─┬──────────────────────────┬─┬─────────┬──────────┤
  │                                                                  │ │ ┌─SMALLDATASETPACKING────┐ │ └─VSAM────┘
  │                                                                  │ │ │ SDSP───────────────────│ │
  │ ┌─0──────────┐                                                   │ │ └─NOSMALLDATASETPACKING──┘ │
  │─AGE─(─┬─────────┬─┬──────────────────────────────────────────────┬─)─│ │ NOSDSP─────────────────────┘
  │       └─mindays─┘ │                                              │   │
  │                   │ ┌─999999──┐                                  │   │
  │                   │ │ maxdays─┘                                  │   │
  │ ┌─MIGRATIONLEVEL1──────────────────────────────────────────────┬─┘   │
  │─│ ML1──────────────────────────────────────────────────────────│     │
  │ ┌─MIGRATIONLEVEL2──────────────────────────────────────────────┬─┘   │
  │─│ ML2──────────────────────────────────────────────────────────│     │
  └─VOLUME(volser)─────────────────────────────────────────────────┘     │
```

F: DUMPVOLUME Optional Parameters:

```
├─┬─────────────────────────────────────────────────────────────────►
  │ ┌─DUMPCONTENTS──┬─┬──────────────┬─┐
  └─│ DCONTENTS─────┘ └─(srcvol)─────┘ │

►─┬─────────────┬─┬──────────────────────────────────────────────────┤
  └─┤ Fragment B ├─└─SELECT─(─┬──────────────────┬─)─┘
                              └─┤ Fragment G ├───┘
```

G: DUMPVOLUME SELECT Optional Parameters:

```
├─┬─────────────┬─┬─────────────┬─┬─────────┬─┬─────────────┬─┬─────────────────┬─►
  └AVAILABLE────┘ └UNAVAILABLE──┘ └EXPIRED──┘ └UNEXPIRED──┘ └DUMPCLASS(class)──┘

►─┬─────────────┬─┬─────────────────┬─────────────────────────────────────────┤
  ├─LIBRARY─────┤ ├─NORETENTIONLIMIT┤
  └─NOLIBRARY───┘ └─NORETLIMIT──────┘
```

H: MVOL | ML1 | ML2 | VOLUME Optional Parameters:

```
    ┌─MIGRATIONCONTROLDATASET──────┐
    │                              │
    │   ┌─BACKUPCONTROLDATASET─┐   │
    │   ├─BCDS─────────────────┤   │
    │   └─BACKUP───────────────┘   │
    │   ┌─MIGRATIONCONTROLDATASET┐ │
    │   ├─MCDS───────────────────┤ │
    │   └─MIGRAT─────────────────┘ │
    └─BOTH─────────────────────────┘
├──────────────────────────────────┬─┬──────────┬─┬──────────────────────────┤
                                   └ALLDUMPS──┘ └┤ Fragment B ├┘
```

I: PRIMARYVOLUME Optional Parameters:

```
                                   ┌─MIGRATIONCONTROLDATASET──────┐
                                   │                              │
├─┬─────────────────────┬──────────┼──┬─────────────────────────┬─┤
  ├─ALLDUMPS────────────┤          │  ├─BACKUPCONTROLDATASET─┐  │
  └─┬─BACKUPCONTENTS─┬─(nn)─┘      │  ├─BCDS─────────────────┤  │
    └─BCONTENTS──────┘             │  └─BACKUP───────────────┘  │
                                   │  ├─MIGRATIONCONTROLDATASET┐│
                                   │  ├─MCDS───────────────────┤│
                                   │  └─MIGRAT─────────────────┘│
                                   └─BOTH───────────────────────┘

►─┬──────────────┬─┬─────────────────────────────────────────┬─┬──────────┬─┤
  └┤ Fragment B ├┘ └SELECT(─┬──────────────┬─┬──────────┬─)─┘ └┤ Fragment B ├┘
                            └MULTIPLEVOLUME┘ └VSAM──────┘
```

J: TTOC Optional Parameters:

```
├─┬─────────────────────────────────────────────────────────────────────────┬─┬──────────┬─┬─────────────┤
  └SELECT(─┬─────────────────────┬─┬──────────┬─┬──────────┬─)─┘ └┤ Fragment B ├┘
           ├─┬─MIGRATIONLEVEL2─┬─┤ └┤ Fragment K ├┘ └┤ Fragment L ├┘
           │ └─ML2─────────────┘ │
           ├─BACKUP──────────────┤
           └─BOTH────────────────┘
```

K: TTOC SELECT Optional Parameters:

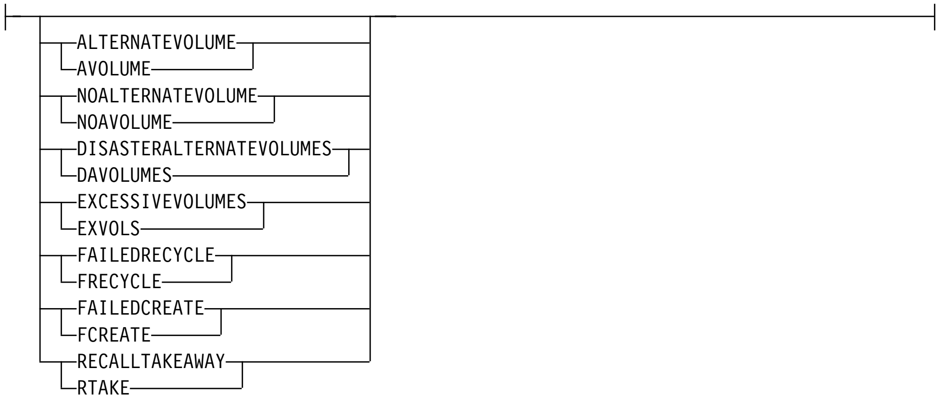

L: TTOC SELECT Optional Parameters:

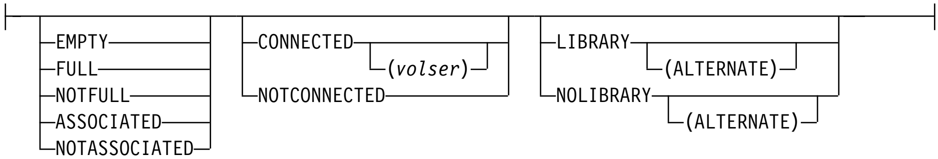

M: TTOC Optional Parameters:

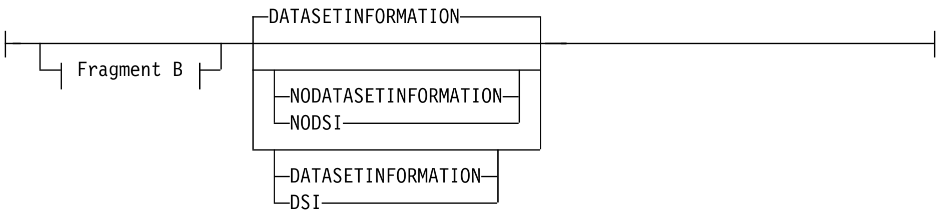

Notes:

1. The SELECT CONNECTED subparameter of the LIST TTOC command cannot be specified with any of the SELECT subparameters shown in the **K** syntax fragment.
2. The BACKUPCONTROLDATASET or BCDS parameter and the BACKUP parameter are not valid with the LIST ML2(TAPE) SELECT(EMPTY) command.

Chapter 22. LOG: Entering Data into the DFSMShsm Log

```
►►──LOG──data──────────────────────────────────────────────────────►◄
```

© Copyright IBM Corp. 1984, 2002

Chapter 23. MIGRATE: Requesting a Space Management Function (SMS-Managed Data Sets)

```
►►──MIGRATE──┬─┬─DATASETNAME─┬─(dsname)──────────────┬──────────────────────────────►
             │ └─DSNAME──────┘                       │
             ├─┬─MIGRATIONLEVEL1─┬──────────────────┤
             │ └─ML1─────────────┘                  │
             └─VOLUME(volser1─┬──────────────────┬─)─┘
                              └─MIGRATE──(0)─────┘

►─┬─────────────────────────────────────────┬─┬─────────┬─┬─────────────────┬─────────►
  └─CONVERT─┬─────────────────────────────┬─┘ └─DAYS─(0)─┘ ├─MIGRATIONLEVEL1─┤
            └─(volser2─┬─────────────┬─)─┘                └─ML1─────────────┘
                       └─unittype────┘

►─┬─────────────────┬─┬─────────────┬──────────────────────────────────────────────►◄
  ├─MIGRATIONLEVEL2─┤ └─TERMINAL────┘
  └─ML2─────────────┘
```

Note: You must specify either DATASETNAME, MIGRATIONLEVEL1, or VOLUME with each MIGRATE command.

© Copyright IBM Corp. 1984, 2002

Chapter 24. MIGRATE: Requesting a Space Management Function (Non-SMS-Managed Data Sets)

```
►►──MIGRATE──┬─┬─DATASETNAME─┬─(dsname)──────────────────────────────────────────────────►
             │ └─DSNAME──────┘                                                           │
             ├─┬─MIGRATIONLEVEL1─┬──────────────────────────────────────────────────────────┤
             │ └─ML1─────────────┘                                                           │
             ├─PRIMARY──────────────────────────────────────────────────────────────────────┤
             └─VOLUME(volser1─┬──────────────────────────────────────────────────────────┬─)─┘
                              ├─┬─DELETEBYAGE─┬─(days)──────────────────────────────────┤
                              │ └─DBA─────────┘                                           │
                              ├─┬─DELETEIFBACKEDUP─┬─(days)─────────────────────────────┤
                              │ └─DBU────────────────┘                                   │
                              └─MIGRATE─┬──────────┬──────────────────────────────────────┘
                                        └─(days)─┘

►─┬─────────────────────────────────────────────────────────────────┬─┬──────────────────┬─┬──────────────────────────────────────►
  └─CONVERT─┬──────────────────────────────────────────────────────┬─┘ └─DAYS─(days)─┘ ├─MIGRATIONLEVEL1─┤
            └─(volser2─┬──────────────┬─)─┘                                             └─ML1─────────────┘
                       └─unittype─┘

►─┬─────────────────────┬─┬──────────────┬─┬──────────────────────────────────────────────────────────────────────────►◄
  ├─MIGRATIONLEVEL2─┤ └─TERMINAL─┘ └─UNIT(unittype)─┘
  └─ML2─────────────┘
```

Note: You must specify either DATASETNAME, MIGRATIONLEVEL1, or VOLUME with each MIGRATE command.

© Copyright IBM Corp. 1984, 2002

Chapter 25. ONLYIF: Allowing the Single Command Immediately Following It In ARCCMDxx to be Executed Conditionally

```
►►──ONLYIF──HSMHOST(hostid)──────────────────────────────────────────►◄
```

© Copyright IBM Corp. 1984, 2002

Chapter 26. QUERY: Displaying the Status of DFSMShsm Parameters, Statistics, and Pending Requests

```
►►─QUERY─┬─────────┬─┬─────────┬─┬─────────────────────────┬──────────────────────────►
         └─ABARS─┘  └─ACTIVE─┘  └─ARPOOL─┬──────────────┬─┘
                                         └─(agname)─┘

►─┬─────────────┬─┬─────────────────────────────────────────────────────────────────►
  └─AUTOPROGRESS─┘  └─BACKUP─┬──────────────────────────────────────────────────┬─┘
                             └─(─┬─ALL─────────────────┬─)─┘
                                 ├─DAILY─┬──────────┬─┤
                                 │       └─(day)─┘  │
                                 ├─SPILL─────────────┤
                                 └─UNASSIGNED────────┘

►─┬─────────────────┬─┬─────────────────────────────────┬─┬─────────────────┬──────►
  └─CDSVERSIONBACKUP─┘  └─┬─COMMONQUEUE─┬─┬──────────┬─┘  ├─CONTROLDATASETS─┤
                          └─CQUEUE──────┘  └─(RECALL)─┘    └─CDS──────────────┘

►─┬─────────────┬─┬─────────────────────────────────┬─┬─────────┬─┬─────────────────┬──────►
  └─CSALIMITS─┘  ├─DATASETNAME─(dsname)─┤  └─IMAGE─┘  ├─MIGRATIONLEVEL2─┤
                 ├─REQUEST─┬──────────┬─┤             └─ML2──────────────┘
                 │         └─(reqnum)─┘  │
                 └─USER─┬──────────┬─────┘
                        └─(userid)─┘

►─┬─────────┬─┬─────────┬─┬─────────┬─┬─────────────────────────────────┬──────────────►
  └─POOL─┘  └─RETAIN─┘  └─SETSYS─┘  └─SPACE─┬──────────────────────────┬─┘
                                             │   ┌──────────────┐       │
                                             │   ▼──────────────┴─┘     │
                                             └─(──volser──────────────┴─)─┘

►─┬─────────────┬─┬─────────────┬─┬─────────┬─┬─────────────────┬─┬─────────────┬──────►◄
  └─STARTUP─┘  └─STATISTICS─┘  └─TRAPS─┘  ├─VOLUMEPOOL─┤  └─WAITING─┘
                                          └─VOLPOOL───────┘
```

© Copyright IBM Corp. 1984, 2002

Notes:

1. You must specify at least one of the optional parameters to have anything displayed.
2. Any QUERY command issued within the startup procedure may not always produce correct data because DFSMShsm is not yet completely initialized.
3. The SPACE parameter is not supported for SMS-managed volumes.
4. The QUERY command does not support sending the results of the query to an output data set; however, it does support extended consoles. Using TSO/E extended consoles, you can submit programs that can issue a console command, such as a QUERY, and get the results back for interpretation. DFSMShsm provides a sample REXX program called QUERYSET in SYS1.SAMPLIB(ARCTOOLS).

Chapter 27. RECALL: Recalling a Specific Migrated Data Set

```
>>──RECALL──dsname──┬──────────────────────────────────────────────────────────────────────────────>
                    └─DAOPTION(──┬─SAMETRK──┬─)─┘
                                 ├─RELTRK───┤
                                 └─RELBLK───┘

>──┬──────────────────────────────────────────────────────────────────────────────────────────────>
   └─DFDSSOPTION─(──┬─RETRY──────────────────────────────────────────────────────────────────────)─┘
                    ├─VOLCOUNT(──┬─N(nn)──┬─)──────────────────────────────────────────────────┤
                    │            └─ANY────┘                                                      │
                    └─RETRY──VOLCOUNT(──┬─N(nn)──┬─)──────────────────────────────────────────────┘
                                        └─ANY────┘

>──┬──────────────────────────┬──┬──────────────────────────────────────────────────────────────┬──>◄
   └─FORCENONSMS──────────────┘  └─UNIT(unittype)──VOLUME(volser)──────────────────────────────┘
```

Note: You can specify RETRY, VOLCOUNT, or both with the DFDSSOPTION, but you must specify at least one parameter.

© Copyright IBM Corp. 1984, 2002

Chapter 28. RECOVER: Recovering a Backup Version or Dump Copy of a Data Set or a Volume

```
►►──RECOVER──┬─dsname─┬──────────────────┬─┬──────────────────────────────────►◄
             │        └─┤ Fragment A ├─┘ │
             └─*──┬──────────────────┬──┘
                  └─┤ Fragment B ├─┘
```

A: RECOVER Optional Parameters:

```
├──┬──────────────────────────┬──┬──────────────────────────────────────────►
   └─DAOPTION(─┬─SAMETRK─┬─)─┘  ├─DATE(date)──────────────┤
               ├─RELTRK──┤      ├─GENERATION(gennum)──────┤
               └─RELBLK──┘      └─VERSION(vernum)────────┘

►──┬──────────────────────────────────────────────────────────┬──┬──────────────────┬──────────►
   └─DFDSSOPTION─(─┬─RETRY──────────────────────────────────┬─)─┘  └─FORCENONSMS─┘
                   ├─VOLCOUNT(─┬─N(nn)─┬─)──────────────┤
                   │           └─ANY───┘                │
                   └─RETRY──VOLCOUNT(─┬─N(nn)─┬─)──────┘
                                      └─ANY───┘

►──┬──────────────────────────────────────────────────────────────────────────────────────────┬──►
   └─FROMDUMP(─┬──────────────────────────────────────────────────────────────────────────────┬─)─┘
               ├─┬─DUMPCLASS─┬─(class)──────────────────────────────────────────────────────┤
               │ └─DCLASS────┘                                                              │
               └─┬─DUMPVOLUME─┬─(volser)─┬──────────────────────────────────────────────────┬─┘
                 └─DVOL───────┘          └─┬─SOURCEVOLUME─┬─(volser)─┘
                                           └─SRCVOL───────┘

►──┬──────────────────────────┬──┬──────────────────────────┬──┬──────────────┬──────────────►
   └─FROMVOLUME(volser)─┘  └─NEWNAME(newdsname)─┘  └─REPLACE─┘

►──┬──────────────────────────────────────────────────────────────────────────────────────────┤
   └─TOVOLUME(volser)──UNIT(unittype)─┘
```

B: RECOVER Optional Parameters:

```
├──TOVOLUME(volser)──UNIT(unittype)──┬──────────────────┬──┬──────────────────────────────────►
                                     └─DATE(date)─┘  └─TARGETVOLUME(volser)─┘
```

© Copyright IBM Corp. 1984, 2002

```
►──┬──────────────────────────────────────────────────────────────────────────────┬─────────►
   └─FROMDUMP(──┬────────────────────────────────────┬──┬───────────────────┬──)─┘
                ├──┬─DUMPCLASS─┬──(class)────────────┤  ├─APPLYINCREMENTAL──┤
                │  └─DCLASS────┘                     │  └─AINC──────────────┘
                ├──┬─DUMPVOLUME─┬──(volser)──────────┤
                │  └─DVOL───────┘                    │
                └──┬─DUMPGENERATION─┬──(dgennum)─────┘
                   └─DGEN───────────┘

►──┬────────────┬──────────────────────────────────────────────────────────────────────────►◄
   └─TERMINAL───┘
```

Chapter 29. RECYCLE: Consolidating Valid Data to One Tape from Other Tapes

Syntax of the Generic RECYCLE Command

```
►►──RECYCLE──┬─ALL──────────────┬──┬──────────────────────┬──────────────────────────►
             ├─BACKUP───────────┤  └─PERCENTVALID(pct)─┘
             ├─DAILY─┬─────────┬─┤
             │       └─(day)─┘  │
             ├─ML2──────────────┤
             └─SPILL────────────┘

►─┬─DISPLAY──────────────────────────────────────────────────────────────────────────►
  ├─VERIFY──┬──────────────────────────────────────────────────────────────┬──────────┤
  │         └─TAPELIST─┬──────────────────────────────┬─┘                  │
  │                    └─(──┤ Fragment A ├──)─┘                            │
  └─EXECUTE─┬──────────────────────────────────────────────────────────────┬──────────┘
            └─LIMIT(nnnn)─┘ └─TAPELIST─┬──────────────────────────────┬─┘
                                       └─(──┤ Fragment A ├──)─┘

►─┬──────────────────────────────┬──┬──────────────────────────────────────────────────►◄
  └─┬─OUTDATASET─┬─(dsname)─┘  └─SELECT(─┤ Fragment B ├─)─┘
    └─ODS────────┘
```

A: TAPELIST Optional Parameters:

```
├──┬──────────────────────────────────────────────────────────────────────────────────┬──┤
   └─(──┬──────────────────────────────┬──┬──────────────────────┬──┬──────────────────┬──)─┘
        │                ┌─40──┐       │  └─TOTAL(nnnn)─┘  ├─PREFIX(tapelist_prefix)──┤
        └─PULLSIZE(──┴─nnn──┴─)─┘                        └─FULLDSNAME(tapelist_dsn)─┘
```

B: SELECT Optional Parameters:

```
├──┬──────────────────────────────────────────────────────────────────────────────────►
   │                  ┌─,──────────────────┐
   │                  ▼                    │
   └─INCLUDE─(RANGE(──┴─volser1:volser2──┴─))─┘
```

© Copyright IBM Corp. 1984, 2002

```
►──┬──────────────────────────────────────────────────────────────────────────┤
   │                  ┌─,──────────────────┐
   │                  ▼                    │
   └─EXCLUDE─(RANGE(──volser1:volser2──))──┘
```

Syntax of the Specific RECYCLE Command

```
►►──RECYCLE──VOLUME(volser)──┬─DISPLAY──────────────┬──┬──────────────────────────┬──►◄
                             └─EXECUTE──┬─────────┬─┘  └─┬─OUTDATASET──┬─(dsname)─┬─┘
                                        └─FORCE───┘      └─ODS─────────┘          │
```

Chapter 30. RELEASE: Releasing All or Some DFSMShsm Functions for Processing

```
►►──RELEASE──┬──────────────────────────┬──────────────────────────────────────►
             └─ABACKUP──┬──────────────┬─┘
                        └─(agname)─────┘

►─┬─────┬──┬──────────────────────────────────────────────────────────────────►
  └─ALL─┘  └─ARECOVER──┬──────────────────────────────────┬─┘
                       ├─AGGREGATE(agname)────────────────┤
                       └─DATASETNAME(controlfiledsn)──────┘

►─┬─────┬──┬──────────────────┬──┬─────────────────────────────────────────────┬──►
  └─AUDIT─┘  ├─AUTOMIGRATION─┤  └─BACKUP──(──┬─────┬──┬──────────────────────┬─)─┘
             └─AMIG───────────┘               └─AUTO─┘  └─DSCOMMAND(──┬─────┬─)─┘
                                                                      ├─DASD─┤
                                                                      └─TAPE─┘

►─┬──────────────────────────────────────────────────────────────────────────┬──►
  └─┬─COMMONQUEUE─┬──┬──────────────────────────────────────────────────┬─┘
    └─CQUEUE──────┘  └─(RECALL──┬──────────────────────────────────────┬─)─┘
                                └─(──┬──────────┬──┬──────────┬─)─┘
                                     └─PLACEMENT─┘  └─SELECTION─┘

►─┬─────────────────┬──┬─────────┬──┬─────────┬──┬─────┬──┬─────┬──────────────►
  └─DUMP──┬─────────┬─┘  └─EXPIREBV─┘  └─HARDCOPY─┘  └─LIST─┘  └─LOG─┘
          └─(AUTO)─┘

►─┬─────────────────────┬──┬─────────────────────────────────────┬──────────────►
  └─MIGRATION──┬─────────┬─┘  └─RECALL──┬──────────────────────┬─┘
               └─(AUTO)─┘               └─(TAPE──┬─────────┬─)─┘
                                                 └─(TSO)─┘

►─┬─────────────────────────────┬──────────────────────────────────────────────►
  └─RECOVER──┬──────────────────┬─┘
             └─(TAPEDATASET)─┘

►─┬─────────┬──┬─────────┬──┬─────────┬──┬─────────────┬──┬─────────────────────►◄
  └─RECYCLE─┘  └─REPORT─┘  └─RMM─┘  └─TAPECOPY─┘  └─TAPEREPL─┘
```

© Copyright IBM Corp. 1984, 2002

Notes:

1. Although the RELEASE command has no required parameters, you must specify at least one parameter to release a DFSMShsm function for processing.
2. In a multiple address space for DFSMShsm environment, ABARS commands, like RELEASE ABACKUP or RELEASE ARECOVER, can only be issued by the host identified as the main host. DFSMShsm ignores the ABARS commands if directed to a host identified as HOSTMODE=AUX.

Chapter 31. REPORT: Requesting Reports Based on DFSMShsm Statistics Records

```
►►──REPORT──┬──────┬──┬──────┬──┬──────────────────────────────────────────────►
            └─DAILY─┘  └─DELETE─┘  └─┬─FROMDATE─┬─(date)─┘
                                     └─FRDATE───┘

  ┌─SYSOUT(class)──────────┐  ┌─FUNCTION──────────────────────────────────────┐
►─┼────────────────────────┼──┼───────────────────────────────────────────────┼──►
  └─┬─OUTDATASET─┬─(dsname)─┘  ├─NOFUNCTION─────────────────────────────────────┤
    └─ODS────────┘             └─FUNCTION(─┬─────────────────────────────────┬─)─┘
                                           ├─BACKUP──────────────────────────┤
                                           ├─DELETE──────────────────────────┤
                                           ├─MIGRATION(─┬─────────────────┬─)─┤
                                           │            └─┤ Fragment A ├─┘   │
                                           ├─RECALL(─┬─────────────────┬─)─┤
                                           │         └─┤ Fragment B ├─┘   │
                                           ├─RECOVER─────────────────────────┤
                                           │           ┌─ALL─────┐           │
                                           ├─RECYCLE(─┼─────────┼─)─────────┤
                                           │           ├─BACKUP──┤           │
                                           │           └─MIGRATION─┘           │
                                           └─SPILL─────────────────────────────┘

►─┬─────────┬─┬─────────────┬─┬─────────────────────────────────┬──────────────►◄
  └─SUMMARY─┘  └─TODATE(date)─┘  └─VOLUMES─┬─────────────────────┬─┘
                                           │   ┌─────────┐       │
                                           │   ▼         │       │
                                           └─(──volser───┴─)─┘
```

A: MIGRATION Optional Parameters:

```
  ┌─FROMANY──────────────────┐  ┌─TOANY──────────────────┐
├─┼──────────────────────────┼──┼────────────────────────┼──────────────────┤
  ├─┬─FROMANY─┬──────────────┤  ├─┬─TOMIGRATIONLEVEL1─┬─┤
  │ └─FRANY───┘              │  │ └─TOML1─────────────┘ │
  ├─┬─FROMMIGRATIONLEVEL1─┬─┤  └─┬─TOMIGRATIONLEVEL2─┬─┘
  │ └─FRML1───────────────┘  │    └─TOML2─────────────┘
  └─┬─FROMPRIMARY─┬──────────┘
    └─FRPRI───────┘
```

B: RECALL Optional Parameters:

© Copyright IBM Corp. 1984, 2002

```
   ┌─FROMANY──────────────────┐
├──┼──────────────────────────┼──────────────────────────────────────┤
   ├─┬─FROMANY─┬──────────────┤
   │ └─FRANY───┘              │
   ├─┬─FROMMIGRATIONLEVEL1─┬──┤
   │ └─FRML1─────────────┘  │
   └─┬─FROMMIGRATIONLEVEL2─┬──┘
     └─FRML2─────────────┘
```

Chapter 32. SETMIG: Changing the Space Management Status of Non-SMS-Managed Data Sets or Volumes

```
►►──SETMIG──┬─┬─DATASETNAME─┬─(dsname)─┬──────────────────┬─┬──────────────────────►◄
            │ └─DSNAME──────┘          └─┤ Fragment A ├─┘ │
            ├─LEVEL(qualifier)─┬──────────────────┬──────────┤
            │                  └─┤ Fragment B ├─┘          │
            └─VOLUME(volser)─┬──────────────────┬──────────┘
                             └─┤ Fragment A ├─┘
```

A: DATASETNAME | VOLUME Optional Parameters:

```
├──┬──────────────┬──────────────────────────────────────────────────────────┤
   ├─MIGRATION────┤
   └─NOMIGRATION──┘
```

B: LEVEL Optional Parameters:

```
├──┬──────────────────┬──────────────────────────────────────────────────────┤
   ├─COMMANDMIGRATION─┤
   ├─MIGRATION────────┤
   └─NOMIGRATION──────┘
```

Notes:

1. You can specify an optional parameter to change space management status.
2. The SETMIG command is not supported for SMS-managed volumes or data sets.

© Copyright IBM Corp. 1984, 2002

Chapter 33. SETSYS: Establishing or Changing the Values of DFSMShsm Control Parameters

```
>>-SETSYS-+-------------------------------------------------------------------------------------------------------->
          +-ABARSACTLOGMSGLVL(-+-FULL-------+-)-+
          |                    +-REDUCED----+   |

>-+-ABARSACTLOGTYPE(-+-------------------------+-)-+-+-------------------------------------------+-------------------->
  |                  |  +-SYSOUT-+                |  |                                           |
  |                  |  +---------+-------+-------+  |                                           |
  |                  |  |         +-(class)-+       |  |                                           |
  |                  |  +-DASD-------------------+  |  +-ABARSBUFFERS(-+-1-+-)-+                  |
  |                                                  |                  +-n-+    |                  |

>-+-ABARSDELETEACTIVITY(-+-N-+-)-+-+-ABARSKIP(-+-NOPPRC-+-+-NOXRC-+-)-+-------------------------------->
  |                      +-Y-+   |  |          +-PPRC---+ +-XRC----+   |
  |                              |  |                                  |

>-+-ABARSOPTIMIZE(-+-3------+-)-+-+-+-ABARSPROCNAME-+-(-+-DFHSMABR-+-)-+-------------------------------->
  |                +-option-+   |  | +-ABPROCN-------+   +-name-----+   |

>-+-ABARSTAPES(-+-STACK---+-)-+-+-ABARSUNITNAME(-+-3590-1-+-)-+-------------------------------------------
  |               +-NOSTACK-+   |                 +-unittype-+   |

                                                  +-NOACCEPTPSCBUSERID-+
>-+-ABARSVOLCOUNT(-+-NONE-+-)-+                   +-ACCEPTPSCBUSERID---+-------------------------------------
  |                 +-ANY--+   |

>-+-+-ACTLOGMSGLVL-+-(-+-FULL----------+-)-+
  | +-ALMSGLVL-------+   +-EXCEPTIONONLY-+   |
  |                      +-REDUCED-------+   |
```

© Copyright IBM Corp. 1984, 2002

```
►──┬──────────────────────────────────────────────────────────────┬──────────►
   │            ┌─SYSOUT─┐                                        │
   └─┬─ACTLOGTYPE─┬─(─┬──┴────────┴─┬──────────────────┬─┬─)─────┘
     └─ALTYPE─────┘   │             │      ┌─A─────┐   │ │
                      │             └─(──┴─class─┴─)─┘ │
                      └─DASD───────────────────────────┘

►──┬──────────────────────────────────────┬─┬──────────────────────────────────────────────────┬──►
   │                 ┌─3590-1───┐         │ │                                ┌─80──┐           │
   └─ARECOVERML2UNIT(─┴─unittype─┴─)──────┘ └─┬─ARECOVERPERCENTUTILIZED─┬─(─┴─nnn─┴─)─────────┘
                                              └─ARECOVERPCTU────────────┘

►──┬──────────────────────────────────┬─┬─────────────────────────────────────────┬──►
   │                 ┌─SOURCE────┐    │ │                   ┌─3590-1───┐        │
   └─ARECOVERTGTGDS(─┼─ACTIVE────┼─)──┘ └─ARECOVERUNITNAME(─┴─unittype─┴─)──────┘
                     ├─DEFERRED──┤
                     └─ROLLEDOFF─┘

►──┬───────────────────────────────────────────────────────────────┬──────────►
   │                                ┌─2400────────┐                │
   └─┬─AUTOBACKUPSTART─┬─(hhmm1─────┴─┬─────────┬─┴─┬─────────┬─)──┘
     └─ABSTART─────────┘              └─hhmm2───┘   └─hhmm3───┘

►──┬───────────────────────────────────────────────────────────────┬──────────►
   │                                ┌─2400────────┐                │
   └─┬─AUTODUMPSTART─┬─(hhmm1───────┴─┬─────────┬─┴─┬─────────┬─)──┘
     └─ADSTART───────┘                └─hhmm2───┘   └─hhmm3───┘

►──┬─────────────────────────────────────────────────────────────────────┬──►
   └─┬─BACKUP(─┬──────────────────────┬─┬──────────────────────────┬─)─┬─┘
     │         └─┬─ANY────────────────┤ └─INUSE(─┬──────────────┬─)─┘  │
     │           ├─DASD───────────────┤          └─┤ Fragment A ├─┘    │
     │           └─TAPE─┬────────────┬┘                                │
     │                  └─(unittype)─┘                                 │
     └─NOBACKUP────────────────────────────────────────────────────────┘

►──┬──────────────────────────────────┬──────────────────────────────────────►
   └─┬─BACKUPPREFIX─┬─(prefix)────────┘
     └─BPFX─────────┘

►──┬───────────────────────────────────────────────────────────────────────┬──►
   └─CDSVERSIONBACKUP──(─┬────────────────┬─┬────────────────┬─)───────────┘
                         └─┤ Fragment B ├─┘ └─┤ Fragment D ├─┘
```

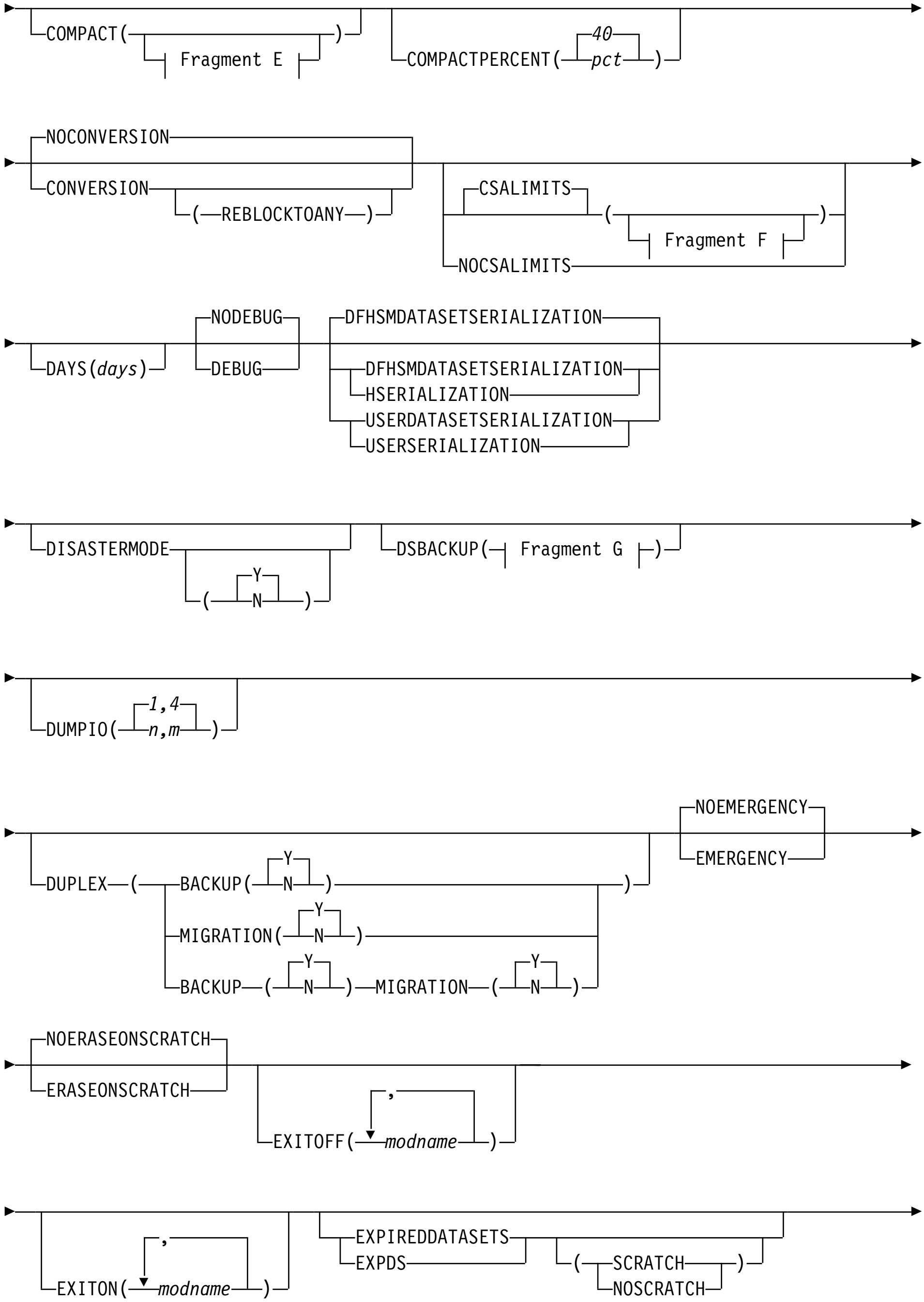
COMPACT(Fragment E)
COMPACTPERCENT(40 pct)
NOCONVERSION
CONVERSION (REBLOCKTOANY)
CSALIMITS (Fragment F)
NOCSALIMITS
DAYS(days)
NODEBUG
DEBUG
DFHSMDATASETSERIALIZATION
HSERIALIZATION
USERDATASETSERIALIZATION
USERSERIALIZATION
DISASTERMODE (Y N)
DSBACKUP(Fragment G)
DUMPIO(1,4 n,m)
DUPLEX (BACKUP(Y N))
MIGRATION(Y N)
BACKUP (Y N) MIGRATION (Y N)
NOEMERGENCY
EMERGENCY
NOERASEONSCRATCH
ERASEONSCRATCH
EXITOFF(modname)
EXITON(modname)
EXPIREDDATASETS
EXPDS
(SCRATCH NOSCRATCH)

```
►──┬────────────────────────────┬──┬──────────────────────────────────────────────────┬──►
   │              ┌─0────┐      │  └─INCREMENTALBACKUP──┬────────────────────────────┬┘
   └─FREQUENCY(───┴─days─┴──)───┘                       │    ┌─ORIGINAL─────┐        │
                                                        └─(──┴─CHANGEDONLY──┴──)────┘

                                                      ┌─INTERVALMIGRATION───┐  ┌─JES2─┐
►──┬────────────────────────────────────────────────┬─┤                     ├──┤      ├──►
   │                           ┌─WAIT───┐           │ └─NOINTERVALMIGRATION─┘  └─JES3─┘
   └─INPUTTAPEALLOCATION──(────┴─NOWAIT─┴──)────────┘

►──┬───────────────────────────────────────┬──┬──────────────────────────────────────────┬──►
   ├─JOURNAL──┬──────────────────────────┬─┤  │                           ┌─1──┐          │
   │          │    ┌─SPEED────┐          │ │  └─┬─MAXABARSADDRESSSPACE─┬─(──┴─nn─┴──)─────┘
   │          └─(──┴─RECOVERY─┴──)───────┘ │    └─MAXABSP──────────────┘
   └─NOJOURNAL─────────────────────────────┘

►──┬────────────────────────────────┬──┬────────────────────────────────────┬──────────────►
   │                  ┌─2──┐        │  │                      ┌─2──┐        │
   └─MAXBACKUPTASKS(──┴─nn─┴──)─────┘  └─MAXDSRECOVERTASKS(────┴─nn─┴──)────┘

►──┬──────────────────────────────┬──┬───────────────────────────────────┬─────────────────►
   │                ┌─2──┐        │  │              ┌─0───────┐          │
   └─MAXDUMPTASKS(──┴─nn─┴──)─────┘  └─MAXEXTENTS(──┴─extents─┴──)──────┘

►──┬─────────────────────────────────────────────┬──┬─────────────────────────────────────────────┬──►
   │                          ┌─2──┐             │  │                          ┌─2──┐             │
   └─┬─MAXINTERVALTASKS─┬──(──┴─nn─┴──)──────────┘  └─┬─MAXMIGRATIONTASKS─┬──(──┴─nn─┴──)─────────┘
     └─MAXINTTASKS──────┘                             └─MAXMIGTASKS───────┘

►──┬────────────────────────────────┬──┬─────────────────────────────────┬─────────────────►
   │                  ┌─5──┐        │  │                   ┌─2──┐        │
   └─MAXRECALLTASKS(──┴─nn─┴──)─────┘  └─MAXRECYCLETASKS(──┴─nn─┴──)─────┘

►──┬─────────────────────────────────────┬─────────────────────────────────────────────────►
   └─┬─MIGRATEPREFIX─┬──(prefix)─────────┘
     └─MPFX──────────┘

►──┬───────────────────────────────────────────────────────────────────────────────────────┬──►
   │                         ┌─10─────────┐  ┌─30───────┐  ┌─3─────────────┐               │
   └─MIGRATIONCLEANUPDAYS(───┴─recalldays─┴──┴─statdays─┴──┴─reconnectdays─┴──)────────────┘
```

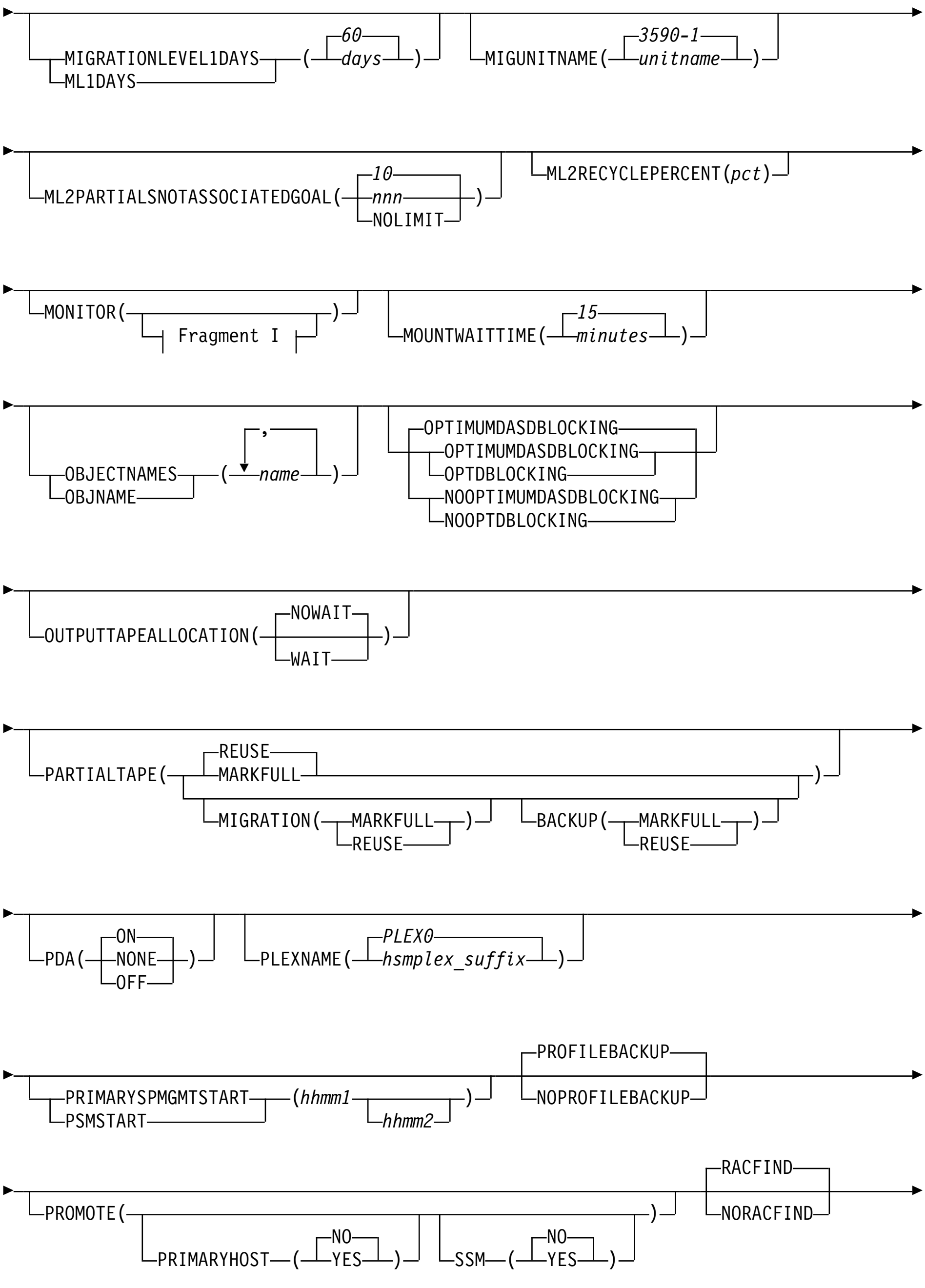
MIGRATIONLEVEL1DAYS
ML1DAYS
60
days
MIGUNITNAME(
3590-1
unitname
ML2PARTIALSNOTASSOCIATEDGOAL(
10
nnn
NOLIMIT
ML2RECYCLEPERCENT(pct)
MONITOR(
Fragment I
MOUNTWAITTIME(
15
minutes
OBJECTNAMES
OBJNAME
name
OPTIMUMDASDBLOCKING
OPTIMUMDASDBLOCKING
OPTDBLOCKING
NOOPTIMUMDASDBLOCKING
NOOPTDBLOCKING
OUTPUTTAPEALLOCATION(
NOWAIT
WAIT
PARTIALTAPE(
REUSE
MARKFULL
MIGRATION(
MARKFULL
REUSE
BACKUP(
MARKFULL
REUSE
PDA(
ON
NONE
OFF
PLEXNAME(
PLEX0
hsmplex_suffix
PRIMARYSPMGMTSTART
PSMSTART
(hhmm1
hhmm2
PROFILEBACKUP
NOPROFILEBACKUP
PROMOTE(
PRIMARYHOST
NO
YES
SSM
NO
YES
RACFIND
NORACFIND

```
►──┬────────────────────────────────────────────────────────┬──────────────►
   └─RECALL──┬───────────────────────────────────────────┬──┘
             └─(──┬─┬─ANYSTORAGEVOLUME─┬──┬────────────────┬─┬─)─┘
                  │ └──────────────────┘  └─(──┬─LIKE───┬─)─┘ │
                  │                            └─UNLIKE─┘     │
                  └─PRIVATEVOLUME──┬──────────────────────┬───┘
                                   └─(──┬─LIKE───┬──)─────┘
                                        └─UNLIKE─┘

►──┬──────────────────────────────────────────────────────────┬────────────►
   └─┬─RECYCLEINPUTDEALLOCFREQUENCY─┬──(─┤ Fragment J ├─)─────┘
     └─RIDF─────────────────────────┘

►──┬──────────────────────────────────────────────────────────────────────────────────┬──►
   └─┬─RECYCLEOUTPUT─┬──(BACKUP──┬─────────────────┬─MIGRATION──┬─────────────────┬─)─┘
     └─RO────────────┘           └─(──unittype──)─┘            └─(──unittype──)─┘

►──┬─────────────────────────────────┬──┬────────────────────────────────────────┬──►
   └─RECYCLEPERCENT(──┬─20──┬──)─────┘  └─RECYCLETAPEALLOCATION(──┬─NOWAIT─┬──)─┘
                      └─pct─┘                                     └─WAIT───┘

                                                        ┌─NOREQUEST─┐
►──┬──────────────────────────────────────────────┬─────┼───────────┼──────────►
   │                           ┌─,────┐           │     └─REQUEST───┘
   │                           ▼      │           │
   └─┬─REMOVECOMPACTNAMES─┬──(───name─┴──)────────┘
     └─REMNAME────────────┘

►──┬──────────────────────────────────────┬──┬──────────────────────────────────────────────────┬──►
   └─SCRATCHFREQUENCY(──┬─9999─┬──)───────┘  └─┬─SECONDARYSPMGMTSTART─┬──(hhmm1──┬───────┬─)───┘
                        └─days─┘               └─SSMSTART────────────┘           └─hhmm2─┘

                                                    ┌─NOSKIPABPRIMARY─┐
►──┬────────────────────────────────────────────┬───┼─────────────────┼────────►
   └─SELECTVOLUME──(──┬──────────────────┬──)───┘   └─SKIPABPRIMARY───┘
                      └─┤ Fragment K ├───┘

   ┌─NOSMALLDATASETPACKING──────────────────────────────────────┐  ┌─NOSMF──────────┐
►──┼────────────────────────────────────────────────────────────┼──┼────────────────┼──►
   ├─┬─SMALLDATASETPACKING─┬──┬─────────────────────────────────┤  └─SMF──(smfid)───┘
   │ └─SDSP────────────────┘  └─(──┬─KB(120)────────────┬──)───┘
   │                               ├─tracks─────────────┤
   │                               └─KB──(──kilobytes──)┘
   └─┬─NOSMALLDATASETPACKING─┬──────────────────────────────────┘
     └─NOSDSP────────────────┘
```

```
►──┬──────────────────────────────────────────────────────────────────────────────────────────────────────────────────►
   │                   ┌──,──┐
   │  ┬─SOURCENAMES─┬─(──┴─name─┴──)──┘
   │  └─SRCNAME──────┘

►──┬──┬─SPILL──┬──────────────────────────────────────────┬──┬─SWAP───┬──┬──────────────────────────────────────────►
   │  │        └─(─┬─ANY──────────────────────────┬─)──┘  │  └─NOSWAP─┘  │
   │  │            ├─DASD─────────────────────────┤       │              │
   │  │            └─TAPE─┬──────────────────────┬┘       │              │
   │  │                   └─(──unittype──)───────┘        │              │
   │  └─NOSPILL─────────────────────────────────────────┘                │

                                                                                ┌─SYS1DUMP───┐
►──┬──────────────────────────────────────────────────────────────────────────┬──┴────────────┴──────────────────────►
   │  ┬─SYSOUT─(──┬─A─────┬──┬──────────────────────────────────────────┬──)──┘
   │  │           └─class─┘  │  ┌─1─────┐   ┌─none special─┐            │
   │  │                      │  └─copies┘   └─form─────────┘            │
   │  └──────────────────────┴──────────────────────────────────────────┘

►──┬──────────────────────────────────────────────────────────────────────────────────────────────────────────────────►
   │  ┬─TAPEDELETION──(──┤ Fragment L ├──)──┘
   │  │

                ┌─NOTAPEHARDWARECOMPACT──────┐
►──┬──┬──────────┴──────────────────────────┬──┬──────────────────────────────────────────────────────────────────►
   │  │  ┬─TAPEHARDWARECOMPACT──┬──────────┤  │  ┬─TAPEINPUTPROMPT(──┬──────────────────────┬──)──┘
   │  │  │  └─TAPEHWC───────────┘          │  │  │                   └─┤ Fragment M ├─┘
   │  │  ┬─NOTAPEHARDWARECOMPACT──┬────────┤  │  │
   │  │  │  └─NOTAPEHWC───────────┘          │  │  │
   │  │  │                                   │  │  │

►──┬──────────────────────────────────────────────────────────────────────────────────────────────────────────────────►
   │  ┬─TAPEMAXRECALLTASKS(──┬─1─────┬──)──┘
   │  │                      └─tasks─┘
   │  │

►──┬──────────────────────────────────────────────────────────────────────────────────────────────────────────────────►
   │  ┬─TAPEMIGRATION──(──┤ Fragment N ├──┬──────────────────────────────────────────────────────────────────)──┘
   │  │                                    │                                                                   │
   │  │                                    └─RECONNECT──(──┬─NONE──────────────────────────────┬──)──┘
   │  │                                                    ├─ALL───────────────────────────────┤
   │  │                                                    └─ML2DIRECTEDONLY───────────────────┘

►──┬──────────────────────────────────────────────────────────────────────────────────────────────────────────────────►
   │  ┬─TAPEOUTPUTPROMPT──(TAPECOPY─(──┬─NO──┬──)─)──┘
   │  │                                 └─YES─┘
   │  │

►──┬──────────────────────────────────────────────────────────────────────────────────────────────────────────────────►
   │  ┬─TAPERECALLLIMITS──┬──(──┬──────────────────────────────────────────────────────────────────────────────)──┘
   │  │                   │     │                                                                                  │
   │  │                   │     └─TASK──(──┬─15────┬──)──┬──────────────────────────────────────────────────┬──┘
   │  │                   │                │  └─time┘    │                                                  │
   │  │                   │                                └─TAPE──(──┬─20────┬──)──┬──────────────────────────┬──┘
   │  │                   │                                           │  └─time┘    │                          │
   │  │                   │                                           │             │                          │
```

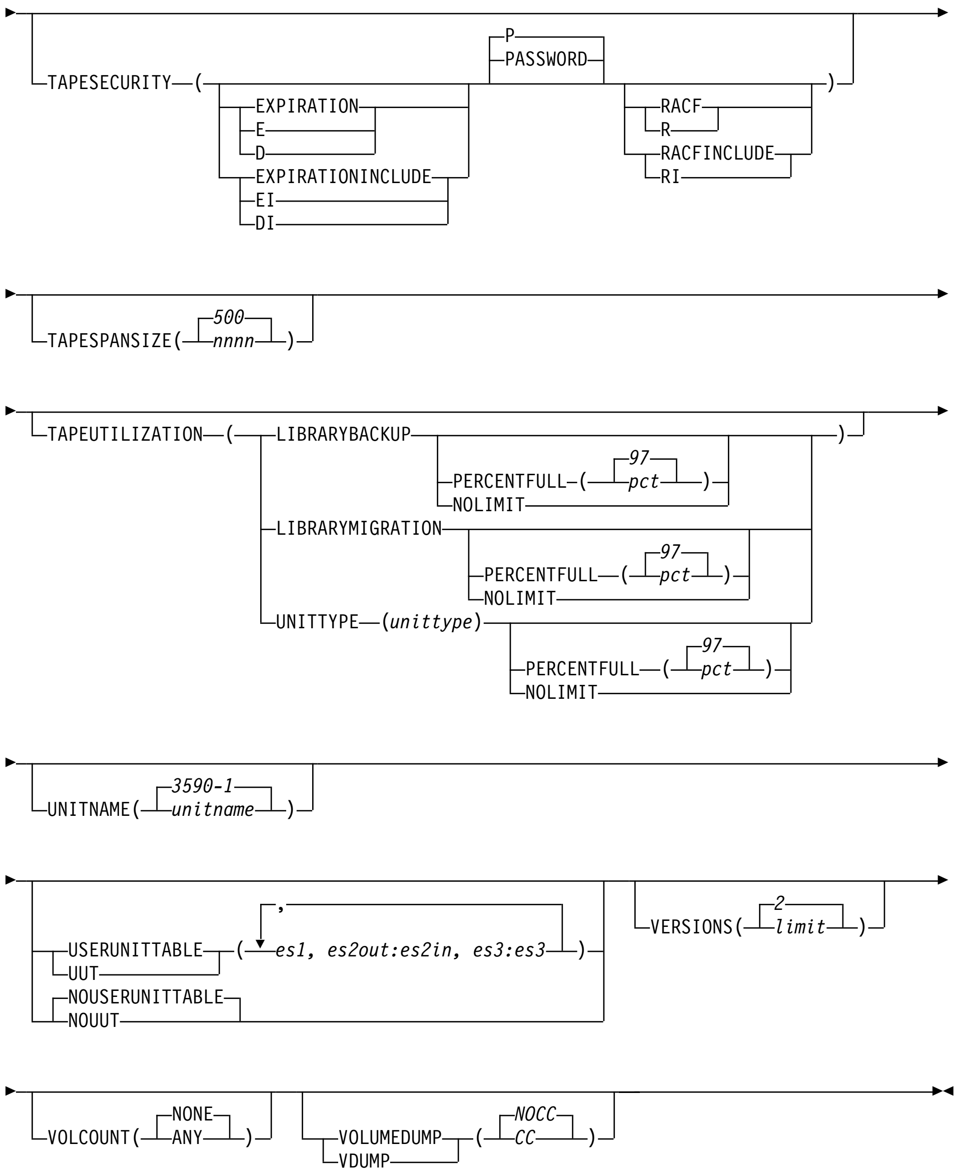

A: INUSE Optional Parameters:

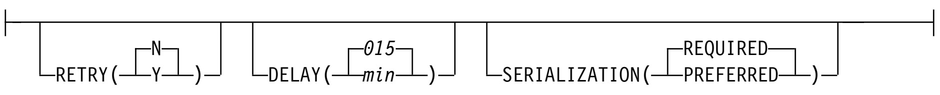

B: CDSVERSIONBACKUP Optional Parameters:

```
|--+-------------------------------------------------------------------+-------------------------->
   |                                                                   |
   +-BACKUPCOPIES--(--+-4-----------+--)-------------------------------+
   |                  |              |                                |
   |                  +-backupcopies-+                                |
   |                                                                   |
   +-BACKUPDEVICECATEGORY(--+-------------------------------------+--)-+-------------------------|
   |                        |                                     |    |
   |                        +-DASD--------------------------------+    |
   |                        |                                     |    |
   |                        +-+-TAPE-+--(--| Fragment C |--)---------+
   |                        | |      |                              |
   |                        | +------+                              |
   |                        |                                       |
   +------------------------+---------------------------------------+
```

C: TAPE Optional Parameters:

```
|--+-------------------------------------------------------------------+-------------------------->
   |                                                                   |
   +-+-NOPARALLEL-+-+-------------------------------------------------+
   | |            | |                                                 |
   | +-PARALLEL---+ |                                                 |
   |                |                                                 |
   +-+-EXPIRATIONDATE-+--(expirationdate)-----------------------------+
   | |                |                                               |
   | +-EXPDT----------+                                               |
   |                                                                  |
   +-+-RETENTION PERIOD-+--(--+-7-----------------+--)-----------------+
   | |                  |     |                  |                    |
   | +-RETPD------------+     +-retentionperiod-+                    |
   |                                                                  |
   +------------------------------------------------------------------+

|--+-------------------------------------------------------------------+-------------------------|
   |                                                                   |
   +-UNITNAME(--+-3590-1--+--)-----------------------------------------+
   |            |         |                                           |
   |            +-unitname+                                           |
   |                                                                   |
   +-------------------------------------------------------------------+
```

D: Additional CDSVERSIONBACKUP Optional Parameters:

```
|--+-------------------------------------------------------------------+-------------------------->
   |                                                                   |
   +-DATAMOVER(--+-HSM-+--)--------------------------------------------+
   |             | |   |                                              |
   |             +-DSS-+                                              |
   |                                                                  |
   +-+-BCDSBACKUPDSN-+--(--+-uid.BCDS.BACKUP-+--)----------------------+
   | |               |     |                 |                        |
   | +-BBDSN---------+     +-dsname----------+                        |
   |                                                                  |
   +------------------------------------------------------------------+

|--+-------------------------------------------------------------------+-------------------------->
   |                                                                   |
   +-+-MCDSBACKUPDSN-+--(--+-uid.MCDS.BACKUP-+--)----------------------+
   | |               |     |                 |                        |
   | +-MBDSN---------+     +-dsname----------+                        |
   |                                                                  |
   +------------------------------------------------------------------+

|--+-------------------------------------------------------------------+-------------------------->
   |                                                                   |
   +-+-OCDSBACKUPDSN-+--(--+-uid.OCDS.BACKUP-+--)----------------------+
   | |               |     |                 |                        |
   | +-OBDSN---------+     +-dsname----------+                        |
   |                                                                  |
   +------------------------------------------------------------------+
```

```
►──┬──────────────────────────────────────────────────────────────────────────┬──┤
   │                                   ┌─uid.JRNL.BACKUP─┐                    │
   └─┬─JRNLBACKUPDSN─┬──(──┬─dsname──────────────┬──)──┘
     └─JBDSN─────────┘     └─────────────────────┘
```

E: COMPACT Optional Parameters:

```
├──┬──┬─NONE─┬──────────────────────────────────────────────────────────────────┬──┤
   │  │      │                                                                  │
   │  └─ALL──┘                                                                  │
   │  ┌─NODASDBACKUP─┐  ┌─NODASDMIGRATE─┐  ┌─NOTAPEBACKUP─┐  ┌─NOTAPEMIGRATE─┐  │
   └──┴─DASDBACKUP───┘  └─DASDMIGRATE───┘  └─TAPEBACKUP───┘  └─TAPEMIGRATE───┘  ┘
```

F: CSALIMITS Optional Parameters:

```
├──┬──────────────────────────────┬──┬──────────────────────────────┬──►
   │                ┌─90──────┐   │                ┌─30──────┐   │
   └─ACTIVE(────┬─percent1─┬──)──┘   └─INACTIVE(────┬─percent2─┬──)──┘
                └──────────┘                        └──────────┘

►──┬──────────────────────────────┬──┬──────────────────────────────┬──┤
   │                ┌─100─────┐   │                ┌─4───────┐   │
   └─MAXIMUM(───┬─K bytes─┬──)──┘   └─MWE(─────┬─#mwes───┬──)──┘
                └─────────┘                    └─────────┘
```

G: DSBACKUP Optional Parameters:

```
├──┬──────────────────────────────────────────────────────────────────────────┬──►
   │                ┌─3000────┐  ┌─250─────┐                                  │
   └─DASDSELECTIONSIZE(──┬─maximum─┬──┬─standard─┬──)──┘
                         └─────────┘  └──────────┘

►──┬──────────────────────────────┬──┬──────────────────────────────┬──┤
   │                              │  │                              │
   └─DASD(────────────────────────┬──)──┘   └─TAPE(──┤ Fragment H ├──)──┘
                │                │
                └─TASKS(──┬─2──┬──)──┘
                          └─nn─┘
```

H: Tape Optional Parameters:

```
├──┬──────────────────────────────┬──►
   │                ┌─2───┐       │
   └─TASKS(──┬─nn─┬──)──┘
             └────┘
```

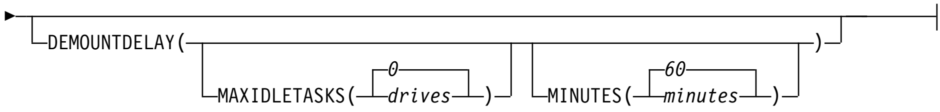

I: MONITOR Optional Parameters:

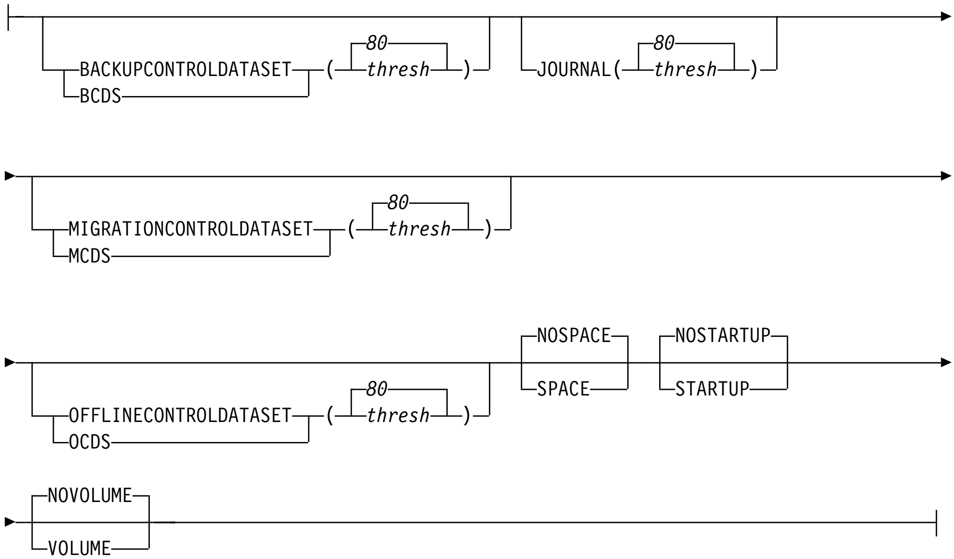

J: RECYCLEINPUTDEALLOCFREQUENCY Optional Parameters:

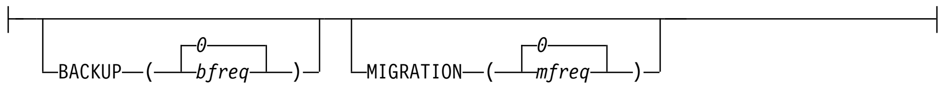

K: SELECTVOLUME Optional Parameters:

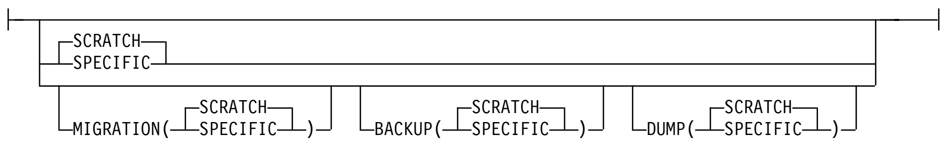

L: TAPEDELETION Optional Parameters:

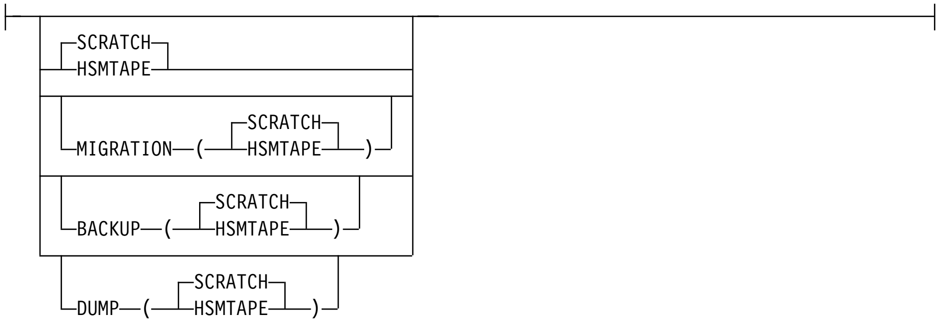

M: TAPEINPUTPROMPT Optional Parameters:

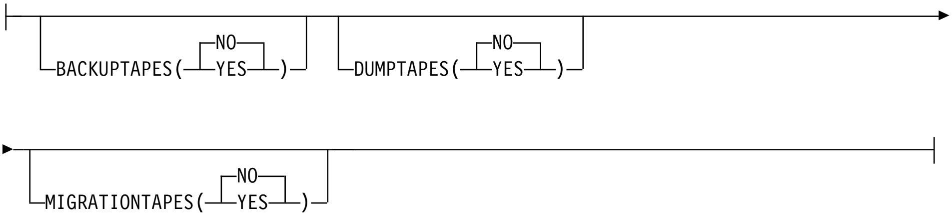

N: TAPEMIGRATION Optional Parameters:

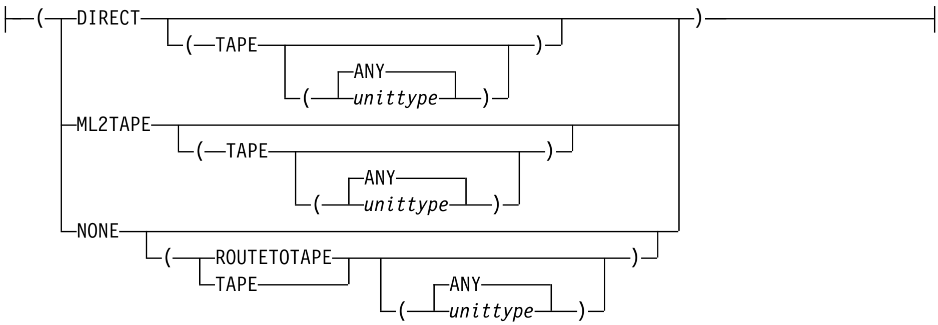

Note: In a multiple address space for DFSMShsm environment, SETSYS commands with ABARS parameters, like ABARS*xxx*, ARECOVER*xxx*, or MAXABARSADDRESSSPACE, or the SETSYS CSALIMITS command can only be issued by the host identified as the main host. DFSMShsm ignores these commands if directed to a host identified as HOSTMODE=AUX.

SETSYS Fast-Path for DFSMShsm Functions

DFSMShsm performs two main functions: Availability Management and Space Management. Availability Management is used to make data available by automatically copying new and changed data sets to backup volumes and DASD volumes to dump tapes. Space Management is used to manage DASD space by enabling inactive data sets to be moved off fast-access storage devices thus creating free space for new allocations. DFSMShsm also provides other supporting functions that are essential to your installation's DFSMShsm environment.

The following table illustrates the functions performed by DFSMShsm for Availability Management, Space Management and these supporting functions.

Main Functions	**Supporting Functions**
Availability Management: ABARS Backup Dump Recover Space Management: Expiration Extent Reduction Interval Migration Migration Recall Recycle Secondary Space Management	CDS (Backup, Journaling, and Monitoring) Logging and Diagnosis MVS Environment Security Tape Environment

The SETSYS command and its parameters are used to establish a DFSMShsm environment. When DFSMShsm is installed, a default set of SETSYS parameters is used. You can specify one or more SETSYS commands in the ARCCMDxx PARMLIB member that is used during the startup of DFSMShsm or you can issue SETSYS commands with specific parameter values after DFSMShsm is started.

The following table lists both the main and supporting functions performed by DFSMShsm and the SETSYS parameters that affect them. The left column lists the functions and the right column lists the SETSYS parameters that affect these functions. This table emphasizes SMS-managed user data and it excludes parameters that relate to non-SMS user data and backup to DASD. Refer to the SETSYS examples at the end of this SETSYS chapter for common user scenarios that you can use for your installation.

Availability Management Functions	SETSYS Parameter
ABARS Environment	ABARSACTLOGMSGLVL
	ABARSACTLOGTYPE
	ABARSBUFFERS
	ABARSDELETEACTIVITY
	ABARSKIP
	ABARSPROCNAME
	ABARSTAPES
	ABARSUNITNAME
	EXITON(ED TV) | EXITOFF(ED TV)
	MAXABARSADDRESSSPACE
ABACKUP	ABARSOPTIMIZE
	EXITON(BE M2) | EXITOFF(BE M2)
ARECOVER	ABARSVOLCOUNT
	ARECOVERML2UNIT
	ARECOVERPERCENTUTILIZED
	ARECOVERTGTGDS
	ARECOVERUNITNAME
	EXITON(CR SK) | EXITOFF(CR SK)
Backup	AUTOBACKUPSTART
	BACKUP
	BACKUPPREFIX
	COMPACT
	COMPACTPERCENT
	DSBACKUP
	DUMPIO
	DUPLEX
	EXITON(BD SA) | EXITOFF(BD SA)
	INCREMENTALBACKUP
	MAXBACKUPTASKS
	See also the DEFINE command and the EXPIREBV command.

Availability Management Functions	SETSYS Parameter
Dump	AUTODUMPSTART
	BACKUP
	BACKUPPREFIX
	DUMPIO
	MAXDUMPTASKS
	VOLUMEDUMP
	See also the DEFINE command.
Recover	CONVERSION
	EXITON(CD RP) | EXITOFF(CD RP)
	MAXDSRECOVERTASKS
	VOLCOUNT

Space Management Functions	SETSYS Parameter
Expiration	EXPIREDDATASETS
Extent Reduction	MAXEXTENTS
Interval Migration	EXITON(MD SA) | EXITOFF(MD SA)
	INTERVALMIGRATION
	MAXINTERVALTASKS
	See also the SETSYS parameters for the Migration function with the exception of the following parameters: EXPIREDDATASETS and PRIMARYSPMGMTSTART.
Migration	COMPACT
	COMPACTPERCENT
	DUMPIO
	DUPLEX
	EXITON(MD MV SA) | EXITOFF(MD MV SA)
	EXPIREDDATASETS
	MAXMIGRATIONTASKS
	MIGRATEPREFIX
	PRIMARYSPMGMTSTART
	SMALLDATASETPACKING | NOSMALLDATASETPACKING
	TAPEMIGRATION

Space Management Functions	SETSYS Parameter
Recall	COMMONQUEUE
	CONVERSION
	EXITON(CD RP) | EXITOFF(CD RP)
	MAXRECALLTASKS
	TAPEMAXRECALLTASKS
	TAPERECALLLIMITS
	VOLCOUNT
Recycle	MAXRECYCLETASKS
	ML2PARTIALSNOTASSOCIATEDGOAL
	ML2RECYCLEPERCENT
	RECYCLEINPUTDEALLOCFREQUENCY
	RECYCLEOUTPUT
	RECYCLEPERCENT
	RECYCLETAPEALLOCATION
Secondary Space Management	EXITON(MM) | EXITOFF(MM)
	MIGRATIONCLEANUPDAYS
	SECONDARYSPMGMTSTART

Supporting Functions	SETSYS Parameter
CDS (Backup, Journaling, and Monitoring)	CDSVERSIONBACKUP
	EXITON(CB) | EXITOFF(CB)
	JOURNAL | NOJOURNAL
	MONITOR
Logging and Diagnosis	ACTLOGMSGLVL
	ACTLOGTYPE
	DEBUG | NODEBUG
	EMERGENCY | NOEMERGENCY
	MONITOR
	PDA
	SMF
	SYSOUT
	SYS1DUMP

Supporting Functions	SETSYS Parameter
MVS Environment	CSALIMITS
	EXITON(IN SD) | EXITOFF(IN SD)
	JES2 | JES3
	NOSWAP
	PLEXNAME
	PROMOTE
	USERDATASETSERIALIZATION | DFHSMDATASETSERIALIZATION
Security	ACCEPTPSCBUSERID | NOACCEPTPSCBUSERID
	ERASEONSCRATCH | NOERASEONSCRATCH
	PROFILEBACKUP | NOPROFILEBACKUP
	RACFIND | NORACFIND
	TAPESECURITY
Tape Environment	COMPACT
	DISASTERMODE
	EXITON(TD TE TV) | EXITOFF(TD TE TV)
	INPUTTAPEALLOCATION
	MOUNTWAITTIME
	OUTPUTTAPEALLOCATION
	PARTIALTAPE
	SELECTVOLUME
	TAPEDELETION
	TAPEHARDWARECOMPACT
	TAPEINPUTPROMPT
	TAPEMIGRATION
	TAPEOUTPUTPROMPT
	TAPESPANSIZE
	TAPEUTILIZATION
	UNITNAME
	USERUNITTABLE | NOUSERUNITTABLE

Relationship of SMS to SETSYS Parameters

The following table indicates the relationship of the SETSYS parameters to SMS-managed DASD volumes and SMS-managed DASD data sets. Parameters that apply equally to both SMS-managed and non-SMS-managed DASD volumes and DASD data sets are not included in this table.

The following abbreviations and their meanings are used in this table:

Abbreviations	Meaning	Description
APP	Applicable	Parameter differs in meaning when applied to SMS-managed or non-SMS-managed DASD volumes or data sets.
CAPP	Conditionally Applicable	Parameter applies in some instances to SMS-managed DASD volumes or data sets.
NAPP	Not Applicable	Parameter does not apply to SMS-managed DASD volumes or data sets.

All SETSYS parameters that affect tape data set names, tape volumes, and tape unit types are applicable to SMS-managed tape environments, and may have different meanings from non-SMS-managed tape environments, depending on the SMS implementation.

Note: Although the SETSYS command has no required parameters, you must specify at least one of the optional parameters to change any system parameters or default values.

SMS Relationship	SETSYS Optional Parameters
CAPP	**ABARSVOLCOUNT**
NAPP	**ARECOVERPERCENTUTILIZED**
APP	**BACKUP | NOBACKUP**
APP	**COMPACT**
APP	**COMPACTPERCENT**
CAPP	**CONVERSION | NOCONVERSION**
NAPP	**DAYS**
APP	**DEBUG | NODEBUG**
APP	**DFHSMDATASETSERIALIZATION | USERDATASETSERIALIZATION**
APP	**EMERGENCY | NOEMERGENCY**
APP	**ERASEONSCRATCH | NOERASEONSCRATCH**
APP	**EXITOFF**

SMS Relationship	SETSYS Optional Parameters
APP	**EXITON**
CAPP	**EXPIREDDATASETS**
NAPP	**FREQUENCY**
APP	**INCREMENTALBACKUP**
APP	**INTERVALMIGRATION | NOINTERVALMIGRATION**
APP	**MAXEXTENTS**
APP	**MIGRATIONCLEANUPDAYS**
NAPP	**MIGRATIONLEVEL1DAYS**
APP	**OBJECTNAMES**
APP	**PROFILEBACKUP | NOPROFILEBACKUP**
APP	**RACFIND | NORACFIND**
NAPP	**RECALL**
APP	**REMOVECOMPACTNAMES**
NAPP	**SCRATCHFREQUENCY**
APP	**SKIPABPRIMARY | NOSKIPABPRIMARY**
APP	**SMF | NOSMF**
CAPP	**TAPEMIGRATION**
NAPP	**TAPEOUTPUTPROMPT**
APP	**USERUNITTABLE | NOUSERUNITTABLE**
NAPP	**VERSIONS**
CAPP	**VOLCOUNT**

Chapter 34. STOP: Shutting Down DFSMShsm

```
►►──STOP──┬──────┬──┬──────────┬──────────────────────────────────────────►◄
          └─DUMP─┘  └─PROMOTE─┘
```

© Copyright IBM Corp. 1984, 2002

Chapter 35. SWAPLOG: Switching Between the DFSMShsm Log Data Sets

```
►►──SWAPLOG──┬──────┬──────────────────────────────────────────────►◄
             ├─LOG──┤
             └─PDA──┘
```

Note: The SWAPLOG command has no required parameters.

© Copyright IBM Corp. 1984, 2002

Chapter 36. TAPECOPY: Making Copies of Selected Cartridge-Type Tape Volumes

```
►►──TAPECOPY──┬─ALL──────────────────────────────────────────────────────────────►
              ├─┬─MIGRATIONLEVEL2─┬──────────────────────────────────────────────┤
              │ └─ML2─────────────┘                                              │
              ├─BACKUP──────────────────────────────────────────────────────────┤
              ├─┬─ORIGINALVOLUMES─┬─(ovol1─┬──────────────────┬─)──────────────┤
              │ └─OVOLS───────────┘        │ ┌──────────┐     │                │
              │                            │ ▼──────────┐     │                │
              │                            └──,ovoln────┴─┘   │                │
              └─INDATASET(volcopy.list.dsname)──────────────────────────────────┘

►─┬─────────────────────────────────────────────────────────────────────────────┬──►
  └─┬─ALTERNATEVOLUMES─┬─(avol1─┬──────────────────┬─)─┘  ├─EXPDT(─┬──────┬─yyddd)─┤
    └─AVOLS────────────┘        │ ┌──────────┐     │      │      └─cc─┘        │
                                │ ▼──────────┐     │      └─RETPD(nnnn)─────────┘
                                └──,avoln────┴─┘

►─┬─────────────────────────────────────────────────────────────────────────────┬──►
  └─┬─ALTERNATEUNITNAME─┬─(──unittype1,unittype2──)─┘
    └─AUNITNAME─────────┘

►─┬─────────────────────────────────────────────────────────────────────────────┬──►◄
  └─┬─ALTERNATE3590UNITNAME─┬─(unittype1,unittype2)─┘
    └─A3590UNITNAME─────────┘
```

© Copyright IBM Corp. 1984, 2002

Chapter 37. TAPEREPL: Replacing Cartridge-Type Tape Volumes with Their Alternate Volumes

```
►►─TAPEREPL──┬─ALL──────────────────────────────────────────────────────►
             ├─BACKUP───────────────────────────────────────────────────┤
             ├─INDATASET(volrepl.list.dsname)───────────────────────────┤
             ├─MIGRATION────────────────────────────────────────────────┤
             ├─ONLYDISASTERALTERNATES──┬──────────────────────────────┤
             │                         └─RESET─┘                        │
             └─┬─ORIGINALVOLUMES─┬─(ovol1──┬──────────────┬──)──┘
               └─OVOLS───────────┘         │ ┌──────────┐ │
                                           └─▼─,ovoln─┘─┘

►──┬──────────────────────────────────┬──┬──────────────────────────────────────────────────────────────────────►
   └─ALTERNATEUNITNAME(unittype)──┘  └─┬─ALTERNATEVOLUMES─┬─(avol1──┬──────────────┬──)──┘
                                       └─AVOLS────────────┘         │ ┌──────────┐ │
                                                                    └─▼─,avoln─┘─┘

►──┬──────────────────────────┬──────────────────────────────────────────────────────────────────────────────►◄
   ├─DISASTERALTERNATEVOLUMES─┤
   └─DAVOLUMES────────────────┘
```

© Copyright IBM Corp. 1984, 2002

Chapter 38. UPDATEC: Recovering the Control Data Sets

```
►►──UPDATEC──┬─ALL──────────────────────────────┬──┬──────────────────┬──────────────►◄
             ├─┬─BACKUPCONTROLDATASET─┬─────────┤  └─JOURNAL(dsname)─┘
             │ └─BCDS─────────────────┘         │
             ├─┬─MIGRATIONCONTROLDATASET─┬─────┤
             │ └─MCDS────────────────────┘     │
             └─┬─OFFLINECONTROLDATASET─┬─────────┘
               └─OCDS──────────────────┘
```

© Copyright IBM Corp. 1984, 2002

Readers' Comments — We'd Like to Hear from You

z/OS
DFSMShsm
Storage Administration
Reference Summary

Publication No. SX35-5062-01

Overall, how satisfied are you with the information in this book?

	Very Satisfied	Satisfied	Neutral	Dissatisfied	Very Dissatisfied
Overall satisfaction	☐	☐	☐	☐	☐

How satisfied are you that the information in this book is:

	Very Satisfied	Satisfied	Neutral	Dissatisfied	Very Dissatisfied
Accurate	☐	☐	☐	☐	☐
Complete	☐	☐	☐	☐	☐
Easy to find	☐	☐	☐	☐	☐
Easy to understand	☐	☐	☐	☐	☐
Well organized	☐	☐	☐	☐	☐
Applicable to your tasks	☐	☐	☐	☐	☐

Please tell us how we can improve this book:

Thank you for your responses. May we contact you? ☐ Yes ☐ No

When you send comments to IBM, you grant IBM a nonexclusive right to use or distribute your comments in any way it believes appropriate without incurring any obligation to you.

Name _____ Address _____

Company or Organization _____

Phone No. _____

Readers' Comments — We'd Like to Hear from You
SX35-5062-01

Cut or Fold
Along Line

Fold and Tape **Please do not staple** Fold and Tape

NO POSTAGE
NECESSARY
IF MAILED IN THE
UNITED STATES

BUSINESS REPLY MAIL

FIRST-CLASS MAIL PERMIT NO. 40 ARMONK, NEW YORK

POSTAGE WILL BE PAID BY ADDRESSEE

International Business Machines Corporation
Information Development
Department 61D
9000 South Rita Road
TUCSON AZ 85775-4401

Fold and Tape **Please do not staple** Fold and Tape

SX35-5062-01

Cut or Fold
Along Line

Program Number: 5694-A01

Printed in the United States of America
on recycled paper containing 10%
recovered post-consumer fiber.

SX35-5062-01