SMP/E for z/OS and OS/390

Reference

SA22-7772-02

SMP/E for z/OS and OS/390

Reference

SA22-7772-02

Note!
Before using this information and the product it supports, be sure to read the general information under “Notices” on page 467.

Third Edition, March 2002

This book replaces the previous edition, SA22-7772-01, which is now obsolete. Changes or additions to text and illustrations are indicated by a vertical line to the left of the change.

This edition applies to IBM SMP/E for z/OS and OS/390, V3R1, program number 5655-G44, and to all subsequent releases and modifications, unless otherwise indicated in new editions.

Changes or additions to text and illustrations are indicated by a vertical line to the left of the change.

Order IBM publications through your IBM representative or the IBM branch office serving your locality. Publications are not stocked at the address given below.

IBM welcomes your comments. A form for readers’ comments may be provided at the back of this publication, or you may address your comments to the following address:

International Business Machines Corporation
Department 55JA, Mail Station P384
2455 South Road
Poughkeepsie, NY 12601-5400
United States of America

FAX (United States & Canada): 1+845+432+9405
FAX (Other Countries):
Your International Access Code +1+845+432-9405

IBMLink (United States customers only): IBMUSM10(MHVRCFS)
Internet e-mail: mhvrcfs@us.ibm.com
World Wide Web: http://www.ibm.com/servers/eserver/zseries/zos/webqs.html

If you would like a reply, be sure to include your name, address, telephone number, or FAX number.

Make sure to include the following in your comment or note:
- Title and order number of this book
- Page number or topic related to your comment

When you send information to IBM, you grant IBM a nonexclusive right to use or distribute the information in any way it believes appropriate without incurring any obligation to you.

© Copyright International Business Machines Corporation 1986, 2002. All rights reserved.
US Government Users Restricted Rights – Use, duplication or disclosure restricted by GSA ADP Schedule Contract with IBM Corp.

Contents

Figures ix

Tables xi

About This Book xiii
Bibliography xiii
Using LookAt to look up message explanations xiii

Summary of Changes xv

Chapter 1. Syntax Notation and Rules 1
How to Read the Syntax Diagrams 1
Syntax Rules for MCS and SMPPARM Members 2
Syntax Rules for XML Statements 4

Chapter 2. SMP/E Modification Control Statements 5
++APAR MCS. 6
++ASSIGN MCS. 8
Data Element MCS 10
++DELETE MCS 17
++FEATURE MCS 21
++FUNCTION MCS 23
Hierarchical File System Element MCS 26
++HOLD MCS 37
++IF MCS. 43
++JCLIN MCS 45
++MAC MCS 50
++MACUPD MCS 57
++MOD MCS 61
++MOVE MCS 70
++NULL MCS 73
++PRODUCT MCS 74
++PROGRAM MCS 77
++PTF MCS 82
++RELEASE MCS 85
++RENAME MCS 90
++SRC MCS. 92
++SRCUPD MCS 97
++USERMOD MCS. 100
++VER MCS 103
++ZAP MCS 109

Chapter 3. Defining Control Statements in SMPPARM Members 113
GIMDDALC Control Statements 113
Syntax 113
Operands 114
Syntax Notes 115
Sample GIMDDALC Member 116
GIMEXITS Control Statements. 117
Syntax 118
Operands 118
Syntax Notes 119
Sample GIMEXITS Member. 119

© Copyright IBM Corp. 1986, 2002

OPCODE Control Statements . . . 121
Syntax . . . 122
Operands . . . 122
Usage Notes . . . 122
Examples . . . 122

Chapter 4. SMP/E Data Sets and Files . . . 125
CLIENT . . . 125
Distribution Library (DLIB) . . . 125
INFILE . . . 125
Link Library (LKLIB) . . . 126
OUTFILE . . . 126
SERVER. . . . 127
SMPCNTL . . . 127
SMPCSI . . . 127
SMPDATA1. . . . 128
SMPDATA2. . . . 129
SMPDEBUG . . . 130
SMPDIR . . . 130
SMPHOLD . . . 131
SMPJCLIN . . . 131
SMPLIST . . . 131
SMPLOG . . . 132
SMPLOGA . . . 132
SMPLTS . . . 133
SMPMTS . . . 134
SMPNTS . . . 135
SMPOBJ . . . 135
SMPOUT . . . 136
SMPPARM . . . 136
SMPPTFIN . . . 137
SMPPTS . . . 138
SMPPTS Spill Data Set . . . 138
SMPPUNCH . . . 139
SMPRPT . . . 140
SMPSCDS . . . 140
SMPSNAP . . . 141
SMPSTS . . . 141
SMPTLIB . . . 141
SMPTLOAD . . . 143
SMPWRK1 . . . 144
SMPWRK2 . . . 144
SMPWRK3 . . . 145
SMPWRK4 . . . 146
SMPWRK6 . . . 146
SMPnnnnn . . . 146
SYSIN . . . 147
SYSLIB . . . 147
SYSPRINT . . . 147
SYSPUNCH . . . 148
SYSUT1, SYSUT2, and SYSUT3. . . . 148
SYSUT4 . . . 149
Target Library . . . 149
Text Library (TXLIB) . . . 150
Zone Statement . . . 150

Chapter 5. SMP/E Data Set Entries . . . 151
How the Data Sets Are Organized . . . 151
How Data Set Entries Are Organized . . . 153
Entries that Control Processing . . . 154
Entries that Define Status and Structure . . . 156
ASSEM Entry (Distribution and Target Zone) . . . 163
BACKUP Entries (SMPSCDS) . . . 168
Data Element Entry (Distribution and Target Zone) . . . 171
DDDEF Entry (Distribution, Target, and Global Zone) . . . 177
DLIB Entry (Distribution and Target Zone) . . . 191
DLIBZONE Entry (Distribution Zone) . . . 195
FEATURE Entry (Global Zone) . . . 199
FMIDSET Entry (Global Zone) . . . 201
GLOBALZONE Entry (Global Zone) . . . 204
Hierarchical File System Element Entry (Distribution and Target Zone) . . . 209
HOLDDATA Entry (Global Zone) . . . 219
LMOD Entry (Distribution and Target Zone) . . . 222
MAC Entry (Distribution and Target Zone) . . . 240
MCS Entry (SMPPTS) . . . 246
MOD Entry (Distribution and Target Zone) . . . 248
MTSMAC Entry (SMPMTS) . . . 263
OPTIONS Entry (Global Zone) . . . 265
PRODUCT Entry (Global Zone) . . . 275
PROGRAM Entry (Distribution and Target Zone) . . . 278
SRC Entry (Distribution and Target Zone) . . . 283
STSSRC Entry (SMPSTS) . . . 289
SYSMOD Entry (Distribution and Target Zone) . . . 291
SYSMOD Entry (Global Zone) . . . 304
TARGETZONE Entry (Target Zone) . . . 314
UTILITY Entry (Global Zone) . . . 318
ZONESET Entry (Global Zone) . . . 325

Chapter 6. SMP/E CSI Application Programming Interface . . . 327
Overview of GIMAPI . . . 327
QUERY Command . . . 327
QUERY Command Parameters . . . 327
Building the QUERY Parameters Data Structure . . . 329
Filter Parameter Syntax . . . 331
Valid Entry Types . . . 333
Valid Subentry Types . . . 334
QUERY Command Processing . . . 351
QUERY Command Output . . . 352
Example of QUERY Command . . . 354
Data Structures for QUERY Command . . . 356
FREE Command . . . 359
FREE Command Parameters . . . 360
FREE Command Processing . . . 360
VERSION Command . . . 360
VERSION Command Parameters . . . 361
VERSION Command Processing . . . 361
VERSION Command Output . . . 361
Programming in C . . . 362
Data Structures in C . . . 363
Programming in PL/I . . . 364
Data Structures in PL/I . . . 365
Programming in Assembler . . . 366

Data Structures in Assembler 367
Additional Programming Considerations 368
Sample Programs That Use GIMAPI 369
Sample C/370 Program 369
Sample PL/I Program 373
Sample Assembler Program 376

Chapter 7. Writing UNIX Shell Scripts 381
Designing a Shell Script for SMP/E Processing 381
Designing for Copy Actions 382
Designing for Delete Actions 382
Designing for Diagnosis 383
Returning Control to SMP/E. 383
Example Shell Script 383

Chapter 8. Library Change File Records 387
Library Change File Record Structure 387
Library Change File Record Types 387
A0 - Alias Record Type 0. 388
A1 - Alias Record Type 1. 389
C0 - Continuation Record Type 0. 391
E0 - Element Record Type 0 392
E1 - Element Record Type 1 393
H0 - Header Record Type 0. 395
L0 - Library Record Type 0 396
L1 - Library Record Type 1 397
L2 - Library Record Type 2 398
P0 - SYSMOD Status Record Type 0 400
S0 - SMP/E Environment Record Type 0 401
T0 - Trailer Record Type 0 402
Valid Action Types 403
Usage Recommendations 404

Chapter 9. SMP/E Exit Routines 407
RECEIVE Exit Routine 407
Changing Records Within SMPPTFIN 408
Inserting Records Within SMPPTFIN 408
Inserting Records at the End of SMPPTFIN 409
Skipping Records in SMPPTFIN 409
Retry Exit Routine 409

Chapter 10. JCL Statements Required to Invoke SMP/E 411
JOB Statement 411
EXEC Statement. 411
DD Statements 412

Chapter 11. Service Routines 413
GIMCPTS: SYSMOD Compaction Service Routine 413
Calling GIMCPTS 413
Example 414
Return Codes 415
GIMDTS: Data Transformation Service Routine 415
Calling GIMDTS 416
Processing 417
Return Codes 417
GIMUNZIP File Extraction Service Routine 417

Calling GIMUNZIP 417
GIMUNZIP Package Control Tags 419
Example of Using GIMUNZIP 420
GIMUNZIP Processing 421
Sample RECEIVE Job for GIMUNZIP Output 421
Return Codes 421
GIMXTRX Service Routine 422
Calling GIMXTRX 422
Input Parameter Data Set Contents 423
Processing 425
Return Codes 429
GIMZIP Packaging Service Routine 429
Calling GIMZIP 430
GIMZIP Package Control Tags. 431
Example of Using GIMZIP 432
GIMZIP Processing 433
Package Attribute File 434
Archive Files 439
Return Codes 444

Chapter 12. GIMIAP: Copy Utility Invocation Program 445
Control Statements Used to Invoke GIMIAP 445
The INVOKE Control Statement 445
COPY Control Statement. 446
The SELECT Control Statement 447
Return Codes 449
JCL Statements Used in the DEIINST or HFSINST Job 450

Chapter 13. GIMUTTBL: Specifying Which Utilities SMP/E Can Call . . . 455
Summary of GIMUTTBL Processing. 455
Using GIMUTTBL 455

Appendix A. SMP/E Naming Conventions. 459
Naming Conventions for HOLD Reason IDs and HOLD Classes 460
Error Reason IDs 460
System Reason IDs 460
User Reason IDs 462
Class Values 462
Naming Conventions for Source IDs 462
Naming Conventions for SYSMODs. 463
Function SYSMOD IDs 463
PTF, APAR, and USERMOD SYSMOD IDs 464

Appendix B. Accessibility 465
Using assistive technologies 465
Keyboard navigation of the user interface. 465

Notices 467
Programming Interface Information 468
Trademarks. 468

Glossary 471

Index 485

Figures

1. Example of Using Data Element MCSs. 12
2. Load Module Structure for ++ZAP Examples 111
3. Sample GIMDDALC member provided in SAMPLIB. 116
4. Sample GIMEXITS member provided in SAMPLIB 120
5. Single-CSI Structure 152
6. Multiple-CSI Structure 153
7. Global Zone: Relationships between Entries that Control Processing 155
8. Target Zone and Distribution Zone: Relationships between Entries that Control Processing 157
9. Target Zone: Relationships between Entries that Define Status and Structure 159
10. Distribution Zone: Relationships between Entries that Define Status and Structure 162
11. ASSEM Entry: Sample LIST Output 164
12. ASSEM Entry: Sample LIST Output When XREF Is Specified 165
13. ASSEM Entry: Sample UNLOAD Output. 166
14. BACKUP Entries: Sample LIST Output 170
15. Data Element Entry: Sample LIST Output 173
16. Data Element Entry: Sample LIST Output When XREF Is Specified. 174
17. Data Element Entry: Sample UNLOAD Output 175
18. DDDEF Entry: Sample LIST Output for a Target Zone. 183
19. DDDEF Entry: Sample LIST Output for a Global Zone. 184
20. DDDEF Entry: Sample UNLOAD Output. 185
21. DLIB Entry: Sample LIST Output 193
22. DLIB Entry: Sample UNLOAD Output. 193
23. DLIBZONE Entry: Sample LIST Output 197
24. FEATURE Entry: Sample LIST Output 200
25. FMIDSET Entry: Sample LIST Output. 201
26. GLOBALZONE Entry: Sample LIST Output. 206
27. Hierarchical File System Element Entry: Sample LIST Output 213
28. Hierarchical File System Element Entry: Sample LIST Output When XREF Is Specified 214
29. Hierarchical File System Element Entry: Sample LIST Output for SHELLSCR entries 215
30. OS21 Element Entry: Sample UNLOAD Output 216
31. HOLDDATA Entry: Sample LIST Output When SYSMOD Is Not Specified 220
32. HOLDDATA Listed for SYSMOD Entry: Sample LIST Output When SYSMOD Is Specified 221
33. LMOD Entry: Sample LIST Output 230
34. LMOD Entry: Sample LIST Output When XREF Is Specified 232
35. LMOD Entry: Sample UNLOAD Output 234
36. MAC Entry: Sample LIST Output 242
37. MAC Entry: Sample LIST Output When XREF Is Specified 243
38. MAC Entry: Sample UNLOAD Output. 244
39. MCS Entry: Sample LIST Output 247
40. MOD Entry: Sample LIST Output (No Cross-Zone Subentries) 255
41. MOD Entry: Sample LIST Output (Cross-Zone Entries) 256
42. MOD Entry: Sample LIST Output When XREF Is Specified 257
43. MOD Entry: Sample UNLOAD Output (No Cross-Zone Subentries) 258
44. MOD Entry: Sample UNLOAD Output (Cross-Zone Subentries) 260
45. OPTIONS Entry: Sample LIST Output 272
46. PRODUCT Entry: Sample LIST Output 276
47. PROGRAM Entry: Sample LIST Output 279
48. PROGRAM Entry: Sample LIST Output When XREF Is Specified 280
49. PROGRAM Entry: Sample UNLOAD Output 281
50. SRC Entry: Sample LIST Output 285
51. SRC Entry: Sample LIST Output When XREF Is Specified 286
52. SRC Entry: Sample UNLOAD Output 287
53. SYSMOD Entry: Sample LIST Output for a Distribution Zone 299

© Copyright IBM Corp. 1986, 2002

54. SYSMOD Entry: Sample LIST Output for a Target Zone . . . 300
55. SYSMOD Entry: Sample LIST Output When XREF Is Specified . . . 301
56. SYSMOD Entry: Sample UNLOAD Output . . . 302
57. SYSMOD Entry: Sample LIST Output for a Global Zone (Example 1) . . . 310
58. SYSMOD Entry: Sample LIST Output for a Global Zone (Example 2) . . . 311
59. SYSMOD Entry: Sample LIST Output When HOLDDATA Is Specified . . . 312
60. TARGETZONE Entry: Sample LIST Output . . . 316
61. UTILITY Entry: Sample LIST Output . . . 322
62. ZONESET Entry: Sample LIST Output . . . 326
63. Picture of storage for query output . . . 356
64. Illustration of VER data structure . . . 359
65. C syntax of GIMAPI invocation . . . 362
66. PL/I syntax of GIMAPI invocation . . . 364
67. Assembler syntax of GIMAPI invocation . . . 366
68. Example of Alias Record Type 0 records. . . . 389
69. Example of Alias Record Type 1. . . . 391
70. Example of Continuation Record Type 0 . . . 392
71. Example of Element Record Type 0 . . . 393
72. Example of Element Record Type 1 . . . 395
73. Example of Header Record Type 0. . . . 396
74. Example of Library Record Type 0 . . . 397
75. Example of Library Record Type 1 . . . 398
76. Example of Library Record Type 2 . . . 400
77. Example of SYSMOD Status Records . . . 401
78. Example of SMP/E Environment Record Type 0 . . . 402
79. Trailer Record Type 0 . . . 403
80. JCL to Call GIMCPTS . . . 413
81. Sample GIMCPTS jobstream . . . 415
82. JCL to Call GIMUNZIP . . . 418
83. GIMUNZIP Example . . . 420
84. Sample RECEIVE Job for GIMUNZIP. . . . 421
85. JCL to call GIMXTRX. . . . 422
86. Sample Input Parameter Data Set for Function LSTTZN . . . 426
87. TARGETZN Record . . . 426
88. Sample Input Parameter Data Set for Function BMPTZN . . . 427
89. PRODLIST Record . . . 428
90. BITMAP Record. . . . 429
91. Bitstring Section of BITMAP Record . . . 429
92. JCL to Call GIMZIP . . . 430
93. GIMZIP Example . . . 433
94. Package Attribute File (GIMPAF.XML) Example . . . 437
95. File Attribute File (GIMFAF.XML) Example . . . 444
96. JCL to call GIMIAP . . . 450
97. Sample DEIINST Job for GIMIAP . . . 452
98. Sample HFSINST Job for Invoking GIMIAP . . . 453
99. Sample USERMOD Created by GIMDFUT . . . 457

Tables

1. Publications for IBM SMP/E for z/OS and OS/390, V3R1 . . . xiii
2. MCS Statements for Data Elements . . . 10
3. National Language Identifiers Used for Language-Unique Elements . . . 12
4. MCS Statements for Hierarchical File System Elements . . . 26
5. National Language Identifiers Used for Language-Unique Elements . . . 27
6. Possible Dispositions for SMPTLIB Data Sets . . . 143
7. Default Values for UTILITY Entries . . . 318
8. Valid entry values . . . 334
9. Valid subentries for the ASSEM entry . . . 335
10. Valid subentries for the data element entries . . . 335
11. Valid subentries for the DDDEF entry . . . 335
12. Valid subentries for the DLIB entry . . . 336
13. Valid subentries for the DLIBZONE entry . . . 337
14. Valid subentries for the FEATURE entry . . . 337
15. Valid subentries for the FMIDSET entry . . . 338
16. Valid subentries for the GLOBALZONE entry . . . 338
17. Valid subentries for hierarchical file system element entries . . . 338
18. Valid subentries for the HOLDDATA entry . . . 339
19. Valid subentries for the LMOD entry . . . 339
20. Valid subentries for the MAC entry . . . 340
21. Valid subentries for the MOD entry . . . 341
22. Valid subentries for the OPTIONS entry . . . 342
23. Valid subentries for the PRODUCT entry . . . 343
24. Valid subentries for the PROGRAM entry . . . 344
25. Valid subentries for the SRC entry . . . 344
26. Valid subentries for the SYSMOD entry (GLOBAL Zone) . . . 344
27. Valid subentries for the SYSMOD entry (DLIB and Target Zones) . . . 347
28. Valid subentries for the TARGETZONE entry . . . 350
29. Valid subentries for the UTILITY entry . . . 350
30. Valid subentries for the ZONESET entry . . . 350
31. Entry and Subentry Combinations/Output . . . 353
32. QUERY command input parameters . . . 357
33. General SMP/E entry list structure . . . 357
34. General SMP/E entry structure . . . 357
35. General SMP/E subentry structure . . . 358
36. VER pseudo-subentry structure (GLOBAL, target, and DLIB zone) . . . 359
37. Item list structure . . . 359
38. API Version . . . 361
39. Alias Record Type 0 . . . 388
40. Alias Record Type 1 . . . 390
41. Continuation Record Type 0 . . . 391
42. Element Record Type 0 . . . 392
43. Element Record Type 1 . . . 394
44. Header Record Type 0 . . . 395
45. Library Record Type 0 . . . 396
46. Library Record Type 1 . . . 397
47. Library Record Type 2 . . . 398
48. SYSMOD Status Record Type 0 . . . 400
49. SMP/E Environment Record Type 0 . . . 401
50. Trailer Record Type 0 . . . 402
51. GIMMPUXP: Exit Routine Parameter List . . . 407
52. RECEIVE Exit Routine: Parameter List Values . . . 407
53. RECEIVE Exit Routine: Buffer Passed by UXPPRMAD . . . 408

© Copyright IBM Corp. 1986, 2002

54. Retry Exit Routine: Parameter List Values 409
55. Retry Exit Routine: Parameter List Passed by UXPPRMAD 410
56. Summary of SMP/E Naming Conventions 459

About This Book

Use this publication when you need to:

- Allocate SMP/E data sets
- Call SMP/E exit routines or service routines
- Code application programs that use SMP/E application programming interfaces
- Code SMP/E modification control statements
- Code SMPPARM members
- Define which utility programs SMP/E can call
- Transform data elements so that they can be packaged inline

Bibliography

This section tells you more about the SMP/E library.

- The IBM SMP/E for z/OS and OS/390, V3R1 publications are available as printable PDF files and BookManager-viewable softcopy at

  `http://www.ibm.com/servers/eserver/zseries/zos/bkserv/`
- Table 1 lists the IBM SMP/E for z/OS and OS/390, V3R1 publications and briefly describes each one.
- For information on z/OS publications and more information on the IBM SMP/E for z/OS and OS/390, V3R1 books, see *z/OS Information Roadmap*.

Table 1. Publications for IBM SMP/E for z/OS and OS/390, V3R1

Title	Description
SMP/E Messages, Codes, and Diagnosis, GA22-7770	Explains SMP/E messages and return codes and the actions to take for each; and how to handle suspected SMP/E problems.
SMP/E Commands, SA22-7771	Explains SMP/E commands and processing in detail.
SMP/E Reference, SA22-7772	Explains SMP/E modification control statements, data sets, exit routines, and programming interfaces in detail and provides additional SMP/E reference material.
SMP/E User's Guide, SA22-7773	Describes how to use SMP/E to install programs and service.

Using LookAt to look up message explanations

LookAt is an online facility that allows you to look up explanations for z/OS messages, system abends, and some codes. Using LookAt to find information is faster than a conventional search because in most cases LookAt goes directly to the message explanation.

You can access LookAt from the Internet at:

`http://www.ibm.com/servers/eserver/zseries/zos/bkserv/lookat/lookat.html`

or from anywhere in z/OS where you can access a TSO command line (for example, TSO prompt, ISPF, z/OS UNIX System Services running OMVS).

To find a message explanation on the Internet, go to the LookAt Web site and simply enter the message identifier (for example, `IAT1836` or `IAT*`). You can select a

© Copyright IBM Corp. 1986, 2002

specific release to narrow your search. You can also download code from the *z/OS Collection*, SK3T-4269 and the LookAt Web site so you can access LookAt from a PalmPilot (Palm VIIx suggested).

To use LookAt as a TSO command, you must have LookAt installed on your host system. You can obtain the LookAt code for TSO from a disk on your *z/OS Collection*, SK3T-4269 or from the LookAt Web site. To obtain the code from the LookAt Web site, do the following:

1. Go to http://www.ibm.com/servers/eserver/zseries/zos/bkserv/lookat/lookat.html.
2. Click the **News** button.
3. Scroll to **Download LookAt Code for TSO and VM.**
4. Click the ftp link, which will take you to a list of operating systems. Select the appropriate operating system. Then select the appropriate release.
5. Find the **lookat.me** file and follow its detailed instructions.

To find a message explanation from a TSO command line, simply enter: **lookat** *message-id*. LookAt will display the message explanation for the message requested.

Note: Some messages have information in more than one book. For example, IEC192I has routing and descriptor codes listed in *z/OS MVS Routing and Descriptor Codes*. For such messages, LookAt prompts you to choose which book to open.

Summary of Changes

Summary of Changes
for SA22-7772-02
as Updated, March 2002

This revision reflects the deletion, addition, or modification of information to support miscellaneous maintenance items. A vertical bar (v) in the left margin indicates changes to the text and illustrations.

New Information

- A note on when the use of **MALIAS** is required has been added to "++MAC MCS" on page 50.
- A note on when the use of **TALIAS** is required has been added to "++MOD MCS" on page 61.
- Addition information on the requirements for superseding SYSMODs has been added to the description of the SUP operand in "++VER MCS" on page 103.
- Addition information on the LASTUPD subentry has been added to "LMOD Entry (Distribution and Target Zone)" on page 222.
- A new section, "Example 4: Renaming an SMPCSI data set and updating a ZONEINDEX" on page 208, has been added to "GLOBALZONE Entry (Global Zone)" on page 204.
- A new section, "GIMXTRX Service Routine" on page 422, has been added to Chapter 11, "Service Routines" on page 413.
- An appendix with z/OS product accessibility information has been added.

Changed Information

- Chapter 8, "Library Change File Records" on page 387 has been rewritten to improve usability.

Moved Information

- None

Deleted Information

- None

Summary of Changes
for SA22-7772-01
SMP/E Version 3

The book contains information previously presented in SA22-7772-00, which applied to z/OS Version 1 Release 1.

New Information

- A new section, "Syntax Rules for XML Statements" on page 4, has been added.
- New sections "GIMDDALC Control Statements" on page 113 and "GIMEXITS Control Statements" on page 117 have been added to Chapter 3, "Defining Control Statements in SMPPARM Members" on page 113, which has also been given a new title.
- New data sets have been added:
  - "CLIENT" on page 125

© Copyright IBM Corp. 1986, 2002

  - “SERVER” on page 127
  - “SMPDIR” on page 130
  - “SMPNTS” on page 135
  - “SYSIN” on page 147
- The new SUPPHOLD subentry has been added to “OPTIONS Entry (Global Zone)” on page 265 and OPTIONS in Chapter 6, “SMP/E CSI Application Programming Interface” on page 327.
- The new L2 - Library Record Type 2 has been added to Chapter 8, “Library Change File Records” on page 387.
- Information has been added to the descriptions of the following data sets in Chapter 4, “SMP/E Data Sets and Files” on page 125 about the requirements for enabling them to reside in the hierarchical file system:
  - SMPCNTL
  - SMPDEBUG
  - SMPHOLD
  - SMPJCLIN
  - SMPLIST
  - SMPOUT
  - SMPPTFIN
  - SMPPUNCH
  - SMPRPT

Changed Information

- Chapter 9, “SMP/E Exit Routines” on page 407 has been updated to reflect the new SMPPARM member GIMEXITS.
- “GIMUNZIP File Extraction Service Routine” on page 417 and “GIMZIP Packaging Service Routine” on page 429 have been updated.
- The following sections have been updated to reflect longer symbolic link and alias values:
  - “Hierarchical File System Element Entry (Distribution and Target Zone)” on page 209
  - Hierarchical File System Elements and LMOD in Chapter 6, “SMP/E CSI Application Programming Interface” on page 327.
  - A0 - Alias Record Type 0 in Chapter 8, “Library Change File Records” on page 387.
  - “++DELETE MCS” on page 17
  - “Hierarchical File System Element MCS” on page 26
- The following sections have been updated to reflect the new **AMODE=64** and **COMPAT=PM4** link edit parameters.
  - “LMOD Entry (Distribution and Target Zone)” on page 222
  - “MOD Entry (Distribution and Target Zone)” on page 248
  - “++MOD MCS” on page 61

Moved Information

- None.

Deleted Information

- Information on the NUCID subentry has been deleted from “OPTIONS Entry (Global Zone)” on page 265 and OPTIONS in Chapter 6, “SMP/E CSI Application

Programming Interface" on page 327. Also, information related to backup IEANUC01 load modules has been removed from the rest of the book.

See Appendix B, "Migration", in *SMP/E User's Guide* for more information on these and other changes for this release of SMP/E.

This book contains terminology, maintenance, and editorial changes. Technical changes or additions to the text and illustrations are indicated by a vertical line to the left of the change. You may notice changes in the style and structure of some content in this book — for example, headings that use uppercase for the first letter of initial words only, and procedures that have a different look and format. The changes are ongoing improvements to the consistency and retrievability of information in our books.

Chapter 1. Syntax Notation and Rules

This chapter explains the syntax notation and rules for SMP/E modification control statements (MCSs) and OPCODE members used by SMP/E. It describes:

- How to read the notation used to show how control statements should be coded
- The rules to follow when coding control statements

How to Read the Syntax Diagrams

Throughout this publication, the structure defined below is used in describing syntax:

- Read the syntax diagrams from left to right, from top to bottom, following the path of the line.

  The ►►─ symbol indicates the beginning of a statement.

  The ─► symbol indicates that the statement syntax is continued on the next line.

  The ►─ symbol indicates that a statement is continued from the preceding line.

  The ─►◄ symbol indicates the end of a statement.
- Required items appear on the horizontal line (main path).

```
►►──STATEMENT──required_item──────────────────────────────────────────►◄
```

- Optional items appear below the main path.

```
►►──STATEMENT──┬──────────────┬──────────────────────────────────────►◄
               └─optional_item─┘
```

- If you can choose from two or more items, they appear in a vertical stack.

  If you **must** choose one of the items, one item of the stack appears on the main path.

```
►►──STATEMENT──┬─required_choice1─┬──────────────────────────────────►◄
               └─required_choice2─┘
```

  If choosing one of the items is optional, the entire stack appears below the main path.

```
►►──STATEMENT──┬──────────────────┬──────────────────────────────────►◄
               ├─optional_choice1─┤
               └─optional_choice2─┘
```

  If one of the optional items is the default, it appears above the main path and the remaining choices will be shown below.

© Copyright IBM Corp. 1986, 2002

Syntax Notation and Rules

```
                 ┌─default_choice1─┐
►►─STATEMENT─┬──────────────────┬──────────────────────────────────►◄
             ├─optional_choice2─┤
             └─optional_choice3─┘
```

- Keywords appear in uppercase (for example, **PARM1**). **They must be spelled exactly as shown.**
- Variables appear in lowercase italics (for example, *parmx*). They represent user-supplied names or values.

```
►►─STATEMENT─variable──────────────────────────────────────────────►◄
```

- An arrow returning to the left above the main line indicates an item that can be repeated.

```
                 ┌──────────────────┐
                 ▼                  │
►►─STATEMENT──────repeatable_item──┴──────────────────────────────►◄
```

  A repeat arrow above a stack indicates that you can make more than one choice from the stacked items, or repeat a single choice.
  - A repeat arrow above a stack of keywords means that you can enter one or more of the keywords. However, **each keyword can be entered only once**.
  - A repeat arrow above a variable means that you can enter one or more values for the variable. However, **each value can be entered only once**.
- If punctuation marks, parentheses, arithmetic operators, or other such symbols are shown, you must enter them as part of the syntax.
- Sometimes a single substitution represents a set of several parameters. For example, in the following diagram, the callout **Parameter Block** can be replaced by any of the interpretations of the subdiagram that is labeled **Parameter Block:**.

```
►►─STATEMENT──┬─CLAUSE1──────────────┬──────────────────────────────►◄
              └─┤ Parameter Block ├─┘
```

  Parameter Block:

```
├──┬─PARM1──────────┬──────────────────────────────────────────────┤
   └─PARM2──┬─PARM3─┬┘
            └─PARM4─┘
```

Syntax Rules for MCS and SMPPARM Members

Follow these rules when you code SMP/E modification control statements (MCS) and SMPPARM member control statements:

- SMP/E input is case-sensitive. Use uppercase letters to enter all SMP/E keywords. Enter operands in the same case as the intended operand values. Enter the text within a comment in any case you prefer.
- Start each statement on a new logical 80-byte record.

For MCSs, do the following:
– Code the "++" for the MCS in columns 1 and 2.
– Code the MCS name on the same line as the "++".

For OPCODE member control statements, do the following:
– Code the KEY=*xxx* operand first.
– Do **not** continue OPCODE member control statements on a subsequent record.

Note: Except for these restrictions, the SMP/E MCSs and OPCODE member control statements can begin and end anywhere up to and including column 72.

- You can code optional information in any order, except where noted in the syntax and operand descriptions.
- Include at least one blank between each operand.
- Separate operands and their values with a blank or comma.

  Note: Although the syntax diagrams show only commas when indicating the allowable separator characters for repeating values, one or more blank characters may be used instead to separate repeating values.
- You can continue a statement on more than one line. SMP/E assumes a statement is continued if it did not find a period (.) before column 73.

  Notes:
  1. OPCODE members are an exception—they cannot span multiple records.
  2. If an operand's value must span multiple lines and that value is delimited by quotation marks, the value should extend up to and including column 72 and restart on column 1 of the next line. Put a quotation mark before the value and another after the value, but do **not** add extra quotation marks where the value spans lines. Blanks within the quoted value are considered to be part of the value, including any blanks at the beginning of a continuation line.
- Start comments with "/*" and end them with "*/". The first "*/" encountered after the initial "/*" will end the comment. A comment can appear anywhere within or after a statement, but should not start before a statement, nor begin in column 1. (When "/*" starts in column 1, it indicates the end of an input data set.) A comment after the ending period **must** start on the same line as the period. You cannot specify any additional operands or comments after that final comment. For example, you can code a comment like this:

```
SET      BDY(MVSTST1)       /* Comment after period
                               continued on subsequent
                               records is okay.        */.
```

  However, you should **not** code a comment like this:

```
SET      BDY(MVSTST1)  .    /* Comment after period okay */
                            /* but this comment will give a
                               syntax error */
```

  This causes a syntax error at the start of the second comment after the period.
- Comments can be in single-byte characters (such as English alphanumeric characters) or in double-byte characters (such as Kanji).
- End each statement with a period.
- SMP/E completes processing for one statement before it starts processing the next one.

- SMP/E ignores columns 73 through 80. If data, such as a period, is specified beyond column 72, SMP/E ignores it and indicates an error in the statement after the one containing that data.

Syntax Rules for XML Statements

XML statements may be coded in the CLIENT, SERVER, SYSIN, file attribute, and package attribute files for use with the GIMZIP and GIMUNZIP service routines.

The following syntax rules apply to XML statements:

- SMP/E ignores columns 73 through 80.
- All tags have a starting and ending delimiter specified as <*keyword*> and </*keyword*>, respectively.
- Any tag that does not contain another tag (that is, nested tags) may have an ending delimiter of either ***</keyword>*** or just ***/>***.

```
►►──<start-tag──┬──────────────────────────────┬──>──</end-tag>──────────►◄
                │ ▼                            │
                └─attribute="attribute value"──┘

►►──<start-tag──┬──────────────────────────────┬──/>──────────────────────►◄
                │ ▼                            │
                └─attribute="attribute value"──┘
```

- Comments must must begin with ″<!--″ and end with ″-->″. All data between the ″<!--″ and the ″-->″ is ignored. Comments may not be placed inside a tag.
- Any text not contained within comment delimiters is syntax checked.
- Tags are case sensitive; attribute values may be mixed case.
- A tag is not required to start on a new line.
- The XML markup characters, ’**<**’, ’**>**’, and ’**&**’, may not appear within a tag name or an attribute value.

Chapter 2. SMP/E Modification Control Statements

Each SYSMOD processed by SMP/E is composed of two distinct types of data: instructions to SMP/E identifying the elements in the SYSMOD and how to install them, and the actual element replacements or updates. The instructions to SMP/E consist of a series of control statements, called modification control statements (or MCSs). This chapter describes the various MCSs that are processed by SMP/E.

Building SYSMODs (Packaging)

Building SYSMODs ("packaging") includes combining the appropriate MCS statements with software elements to create one or more SYSMODs. Depending on the type of SYSMODs you are building and how you plan to distribute them, packaging can also involve putting the SYSMODs in the proper format on the distribution medium.

Although this book describes the syntax of SMP/E MCS statements, it does not contain all the information you need to use these statements for packaging SYSMODs.

- To package function SYSMODs and the associated service (PTF SYSMODs and APAR SYSMODs), you must use this book along with the *MVS Packaging Rules* manual, which contains the rules, restrictions, and recommendations for packaging SYSMODs.
- To package USERMOD SYSMODs, use this book along with the *SMP/E User's Guide*, which steps you through building a USERMOD and provides USERMOD examples that you might find helpful.

Notes:

1. Each section describing an individual MCS has examples of SYSMODs containing that MCS. In the examples, the MCS being described is underlined. This is done only to make that MCS stand out; it does not imply that any special processing must be done to enter that data.
2. The examples of MCSs do not show the use of all the operands for each MCS. When you want to know how to use a particular operand for a specific MCS, first check the section describing that MCS. If the operand is not shown in an example there, check the index entry for the desired **operand** to see which other MCSs also contain that operand. Then check the examples under those MCSs. Examples of the use of an operand for one MCS can often illustrate its use for another MCS.

© Copyright IBM Corp. 1986, 2002

++APAR MCS

The ++APAR MCS identifies a service SYSMOD. This type of SYSMOD is a temporary corrective fix to the elements of target system and distribution libraries. All other MCSs for this SYSMOD follow this header MCS. For more information about packaging an APAR fix, see the *MVS Packaging Rules* manual.

Syntax

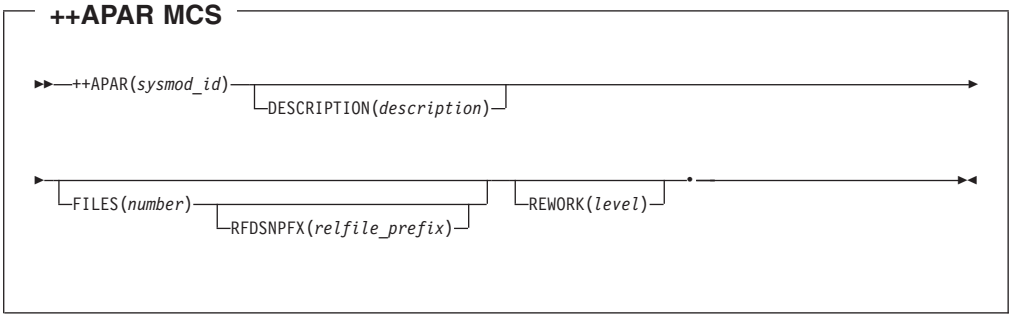

Operands

DESCRIPTION

specifies a descriptive name to be associated with this SYSMOD.

- DESCRIPTION can also be specified DESC.
- The DESCRIPTION value can be in single-byte characters (such as English alphanumeric) or double-byte characters (such as Kanji).
- The DESCRIPTION value can contain up to 64 bytes of data, including blanks. Extra blanks, as well as leading and trailing blanks, are deleted. (For double-byte data, the 64-byte maximum includes all shift-in and shift-out characters, as well as the double-byte characters. Shift-in and shift-out pairs with only blanks between are compressed).
- The DESCRIPTION value can span multiple 80-byte records. Data must continue up to and including column 72 and begin in column 1 of the next line. All data past column 72 is ignored. For single-byte data, the break does not translate to a blank unless a blank is explicitly coded in column 72 of the first line or in column 1 of the second line. For double-byte data, each line must contain both the shift-out and shift-in characters.
- If DESCRIPTION is specified, it must contain at least one non-blank character.
- If parentheses are included in the text, they must be in matched pairs.

FILES

specifies the number of relative files belonging to this APAR fix. It can be a decimal number from 1 to 9999. For information about packaging SYSMODs in relative files, see the *MVS Packaging Rules* manual.

Notes:

1. Although SMP/E allows you to package APAR fixes in relative files, they are not generally packaged in this format.
2. If a packager uses a high-level qualifier on RELFILE data sets, the RFDSNPFX operand on the header MCS (not the RFPREFIX operand on the RECEIVE command) **must** be used to identify that high-level qualifier.

REWORK
specifies the level of this SYSMOD, which was reworked for minor changes. Up to eight numeric characters can be specified.

For SYSMODs supplied by IBM, the REWORK level is *yyyyddd*, where *yyyy* is the year the SYSMOD was reworked and *ddd* is the Julian date.

REWORK allows an updated SYSMOD to be automatically received again, as long as it is more recent than the version that has already been received. This takes the place of rejecting the SYSMOD and receiving it again.

Note: If a SYSMOD appears more than once in the SMPPTFIN data set, the first occurrence may be received. However, none of the subsequent versions of the SYSMOD are received, even if their rework level is higher than the one for the first version of the SYSMOD. (Message GIM40001E is issued for each of the subsequent versions of the SYSMOD.)

RFDSNPFX
identifies to SMP/E the prefix used in the relative file data set names for this SYSMOD. SMP/E uses this prefix when allocating data set names for the SYSMOD's relative files during RECEIVE processing.

- This operand can be specified only if the FILES operand is also specified.
- The RFDSNPFX value specified on the MCS statement must match the actual prefix used in the data set names for the associated relative files.

  For example, if the names of the relative files created for a SYSMOD start with "IBM", as in **IBM.***sysmod_id***.F1**, the header MCS statement for the SYSMOD must specify **RFDSNPFX(IBM)** so SMP/E knows which prefix to use when allocating the data set names for the SYSMOD's relative files during RECEIVE processing.
- Following standard data set naming conventions, the prefix can be from 1 to 8 alphanumeric or national ($, #, @) characters or a dash (–).

  To enable full Security Server protection for tape data sets and to keep the tape header within the 17-character limit (including periods), you should limit the prefix to 1 to 3 characters. If the name exceeds the 17-character limit, only the rightmost 17 characters are written to the tape header label.

sysmod_id
specifies a unique 7-character system modification identifier for the APAR fix. See "Naming Conventions for SYSMODs" on page 463 for more information.

Examples

Here is an example of a SYSMOD containing a ++APAR statement for a temporary fix to module IFBMOD01. As the example shows, this fix is needed to answer APAR AZ12345 on an MVS system. The module must be at the service level provided by PTF UZ00004 for function FXY1040.

```
++APAR(AZ12345)             /* APAR type fix            */.
++VER(Z038) FMID(FXY1040)   /* for MVS product FXY1040  */
            PRE(UZ00004)    /* at this service level.   */.
++ZAP(IFBMOD01)             /* Change to one module     */
            DISTLIB(AOSFB)  /* in this DLIB.            */.
...
... IMASPZAP control statements
...
```

++ASSIGN MCS

The ++ASSIGN MCS assigns a source identifier (source ID) to one or more specified SYSMODs, as long as those SYSMODs are in the SMPPTS data set by the end of RECEIVE processing.

Syntax

++ASSIGN MCS

```
                                  ┌──,──────┐
                                  ▼         │
►►──++ASSIGN──SOURCEID(source_id)──TO(──sysmod_id──)──•──────────────────────────►◄
```

Operands

SOURCEID
is a 1- to 8-character string identifying the source of the SYSMODs being processed. SMP/E associates the SOURCEID value with the SYSMODs named on the ++ASSIGN MCS.

TO
specifies the SYSMODs with which the source ID is to be associated.

Usage Notes

- The source ID specified on the ++ASSIGN statement is added to any source ID that was assigned to a specified SYSMOD by the RECEIVE command. It is also added to any source IDs currently associated with a specified SYSMOD that has already been received.
- ++ASSIGN statements are processed only when the SMPPTFIN data set is processed.
  - If the whole SMPPTFIN data set is processed, all ++ASSIGN statements are processed.
  - If only selected SYSMODs are processed, the ++ASSIGN statements for those SYSMODs are processed.

  ++ASSIGN statements are not processed when only the SMPHOLD data set is being processed.
- The SOURCEID and TO values must be validly specified and cannot be blank or null. For more information about source ID naming conventions, see “Naming Conventions for Source IDs” on page 462.
- The source ID is not assigned to any SYSMODs that are not in the SMPPTS.
- The same SYSMOD cannot appear more than once on a single ++ASSIGN MCS.
- If the same SYSMOD appears on more than one ++ASSIGN MCS, all the source IDs are associated with the SYSMOD.
- The ++ASSIGN MCS is used in the SMPPTFIN data set and can be placed between, before, or after SYSMODs, ++FEATURE MCS, or ++PRODUCT MCS.

  It must be followed by one of the following: a ++APAR, ++FEATURE, ++FUNCTION, ++PRODUCT, ++PTF, or ++USERMOD MCS; another ++ASSIGN

MCS; or an end-of-file. If one of these does not follow, SMP/E does not receive the SYSMOD being processed, and it skips the ++ASSIGN MCS.

Examples

Here are some examples of ++ASSIGN statements for SYSMODs from several preventive service levels that have been merged into the same ESO tape. A ++ASSIGN MCS has been placed between the groups of SYSMODs to identify their source:

```
++ASSIGN SOURCEID(PUT0101)  /* service level 0101.      */
TO(UZ12345,UZ12346).
++PTF(UZ12345)              /* PTF UZ12345              */.
++VER(Z038) FMID(HXP1100)   /* for MVS function HXP1100.*/.
++MOD(A) DISTLIB(DN554)     /* Update module A.         */.
A
++PTF(UZ12346)              /* PTF UZ12346              */.
++VER(Z038) FMID(HXP1200)   /* for MVS function HXP1200.*/.
++MOD(C) DISTLIB(DN554)     /* Update module C.         */.
C
            •
            •
            •
++ASSIGN SOURCEID(PUT0102)  /* service level 0102.      */
TO(UZ12347,UZ12348).
++PTF(UZ12347)              /* PTF UZ12347              */.
++VER(Z038) FMID(HXP1100)   /* for MVS function HXP1100.*/.
++IF FMID(HXP1200) THEN REQ(UZ12348).
++MOD(D) DISTLIB(DN554)     /* Update module D.         */.
D
++PTF(UZ12348)              /* PTF UZ12348              */.
++VER(Z038) FMID(HXP1200)   /* for MVS function HXP1200.*/.
++MOD(A) DISTLIB(AOS12)     /* Update module A.         */.
A
++MOD(B) DISTLIB(AOS12)     /* Update module B.         */.
B
            •
            •
            •
```

Data Element MCS

Data element MCSs describe elements that are not macros, modules, or source. Data elements have the following characteristics:

- A data element must be a member of a PDS or PDSE (DSORG=PO) or reside in a sequential data set (DSORG=PS).
- The record format (RECFM) must be F, FA, FM, FS, FB, FBA, FBM, FBS, V, VA, VM, VB, VBA, VBM, VS, or VBS.
- The LRECL for a data element must be from 1 to 32,654.
- The records can be numbered or unnumbered.
- A VSAM data set can be a data element if it is in REPRO format. However, after the data is installed by SMP/E, you must run an AMS REPRO job to create the original form of the VSAM data.

Any type of data element may be installed in any distribution or target library that meets these requirements. For example, CLIST data elements can be installed into variable block target libraries.

When copying a data element during APPLY, ACCEPT, or RESTORE processing, it may be necessary for SMP/E to perform the copy itself, rather than invoking the copy utility. SMP/E performs the copy when:

- The target library or distribution library is a sequential data set.
- The data element must be reformatted to be compatible with the target or distribution library. (For more information on the reformatting of data elements, see the section on reformatting data elements in the APPLY command chapter in *SMP/E Commands*)

There are MCSs to replace data elements, just as there are MCSs to replace other types of elements. (There are no MCSs to update data elements.) Table 2 shows the MCSs that can be used for data elements.

Table 2. MCS Statements for Data Elements. If an element is provided in only one language, thex's can be left off the MCS. If an element is provided in more than one language, replace the x's with the appropriate value from Table 3 on page 13.

MCS	Description
++BOOK*xxx*	Online book member
++BSIND*xxx*	Index for an online publications library (bookshelf)
++CGM*xxx*	Graphics source for an online book
++CLIST	CLIST
++DATA	Data not covered by other types
++DATA1–++DATA5	IBM generic data types 1–5 These are for IBM use only, to define elements that are not covered by any existing data types.

Table 2. MCS Statements for Data Elements (continued). If an element is provided in only one language, thex's can be left off the MCS. If an element is provided in more than one language, replace the x's with the appropriate value from Table 3 on page 13.

MCS	Description
++DATA6*xxx*	IBM generic data type 6 This is for IBM use only to define an element not covered by any existing data types.
++EXEC	EXEC
++FONT*xxx*	Printer Font Object Contents Architecture (FOCA) font
++GDF*xxx*	GDF graphics panel
++HELP*xxx*	Help information (for example, a member in SYS1.HELP or a dialog help panel)
++IMG*xxx*	Graphics image for an online book
++MSG*xxx*	Message member (such as for a dialog or for a message data set)
++PARM	PARMLIB member
++PNL*xxx*	Panel for a dialog
++PROBJ*xxx*	Printer object element
++PROC	Procedure in PROCLIB
++PRODXML	Product XML document
++PRSRC*xxx*	Printer source element
++PSEG*xxx*	Graphics page segment for an online book
++PUBLB*xxx*	Online publications library (bookshelf)
++SAMP*xxx*	Sample data, program, or JCL in a data set for sample code
++SKL*xxx*	File skeleton for a dialog
++TBL*xxx*	Table for a dialog
++TEXT*xxx*	Text
++USER1–++USER5	User-defined data types 1–5 These are for user-defined elements that are not covered by any existing data types.
++UTIN*xxx*	General utility input
++UTOUT*xxx*	General utility output

Supporting Several Languages

Some types of elements, such as panels, messages, or text, may have to be translated into several languages. In these cases, the corresponding MCSs contain *xxx* to indicate which language is supported by a given element. Figure 1 shows an example where product XX1 must provide both English and French support for a message module, a panel, a panel message, and a sample element.

```
++FUNCTION(FXX1101).                ++FUNCTION(FXX1102).

++VER(Z038) FMID(EXX1100).          ++VER(Z038) FMID(EXX1100).

++MOD(ZZZMOD0E)...      message     ++MOD(ZZZMOD0F)...
  DISTLIB(AZZZMOD1).     modules      DISTLIB(AZZZMOD1).

++PNLENU(ZZZPNL01)...   panels      ++PNLFRA(ZZZPNL01)...
  DISTLIB(AZZZPNLE)                   DISTLIB(AZZZPNLF)
  SYSLIB(SZZZPNLE).                   SYSLIB(SZZZPNLF).

++MSGENU(ZZZMSG01)...   dialog      ++MSGFRA(ZZZMSG01)...
  DISTLIB(AZZZMSGE)      messages     DISTLIB(AZZZMSGF)
  SYSLIB(SZZZMSGE).                   SYSLIB(SZZZMSGF).

++SAMPENU(ZZZSMP01)...  samples     ++SAMPFRA(ZZZSMP01)...
  DISTLIB(AZZZSAME)                   DISTLIB(AZZZSAMF)
  SYSLIB(SZZZSAME).                   SYSLIB(SZZZSAMF).
```

Figure 1. Example of Using Data Element MCSs

Notes:

1. The message modules can be in the same distribution library, because the element names are different.
2. For the panels, dialog messages, and samples, there is a different element *type* for each language version of an element. Therefore, the element *name* can remain the same for all the languages in which the element is supported. However, elements with the same name must be installed in different libraries. (SMP/E does not check whether different types of data elements have the same name. Likewise, SMP/E does not prevent elements with the same name from being installed in the same libraries.)

Table 3 on page 13 shows the *xxx* values that can be used when the MCS indicates the language being supported.

Table 3. National Language Identifiers Used for Language-Unique Elements

Value	Language	Value	Language
ARA	Arabic	HEB	Hebrew
CHS	Simplified Chinese	ISL	Icelandic
CHT	Traditional Chinese	ITA	Italian (Italy)
DAN	Danish	ITS	Italian (Switzerland)
DES	German (Switzerland)	JPN	Japanese
DEU	German (Germany)	KOR	Korean
ELL	Greek	NLB	Dutch (Belgium)
ENG	English (United Kingdom)	NLD	Dutch (Netherlands)
ENP	Uppercase English	NOR	Norwegian
ENU	English (United States)	PTB	Portuguese (Brazil)
ESP	Spanish	PTG	Portuguese (Portugal)
FIN	Finnish	RMS	Rhaeto-Romanic
FRA	French (France)	RUS	Russian
FRB	French (Belgium)	SVE	Swedish
FRC	French (Canada)	THA	Thai
FRS	French (Switzerland)	TRK	Turkish

Syntax

The syntax to be used depends on the processing to be done for the element:
- Adding or replacing the element
- Deleting the element

Adding or Replacing a Data Element

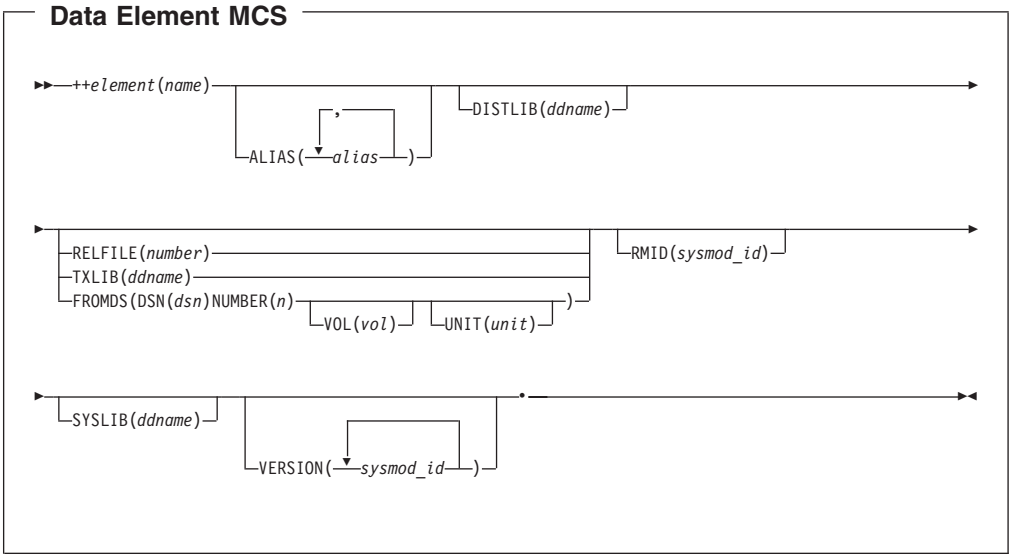

Deleting a Data Element

Data Element MCS

```
►►──++element(name)──DELETE──┬──────────────────┬──┬──────────────────────────────┬──•──────────►◄
                             └─DISTLIB(ddname)──┘  │                              │
                                                   └─VERSION(──┬──────────────┬──)─┘
                                                               ▼──sysmod_id───┘
```

Operands

ALIAS
specifies the alias names for the data element in both the target and distribution libraries.

You can use ALIAS when data elements of the same type must be defined in the same zone and must have the same name for programming access. In this case, you can specify the common name on ALIAS and a unique name as the data element name.

DELETE
indicates that the element and all of its alias names are to be removed from the target libraries, the distribution libraries, and the SMP/E data sets.

Notes:

1. DELETE is mutually exclusive with all other operands except DISTLIB and VERSION.
2. If the element statement is in a base function, you may want to use the DELETE operand on the ++VER MCS to delete the previous release, rather than on the element statement to delete a specific element.
3. Specification of the DELETE operand results in all alias names of the data element being deleted along with the data element identified.

DISTLIB
specifies the ddname of the distribution library for the data element.

Notes:

1. **DISTLIB** must be specified if the element has not been previously recorded on the target zone or distribution zone.
2. If a data element entry already exists in the target zone or distribution zone and the value currently in that entry does not match that specified in the DISTLIB operand, the SYSMOD is not applied or accepted.

element
specifies the type of element. Table 2 on page 10 shows the MCSs used for the various element types.

FROMDS
identifies the partitioned data set that contains this element.

Note: The FROMDS operand and its DSN, NUMBER, VOL, and UNIT suboperands are included in the MCS generated by the BUILDMCS command. IBM does not intend the FROMDS operand to be used in manually coded MCS.

DSN
specifies the dsname of the FROMDS data set. The specified data set name must conform to standard data set naming conventions and cannot contain parentheses. The maximum length of the entire name is 44 characters (including the periods).

NUMBER
specifies a number that SMP/E is to use when assigning a name to the SMPTLIB data set associated with this FROMDS data set. (This is similar to the way the relative file number is used in RELFILE processing.)

VOL
specifies, for an uncataloged data set, the volume serial number of the volume containing the FROMDS data set. If specified, this volume identifier must be from 1 to 6 alphanumeric characters.

VOL may be omitted for a cataloged data set.

UNIT
specifies, for an uncataloged data set, the UNIT type containing the FROMDS data set. If specified, the UNIT value must be from 1 to 8 characters and must conform to standard UNIT naming conventions. SMP/E accepts any nonblank characters specified between the open and close parentheses, up to a maximum length of 8.

UNIT may be omitted for a cataloged data set.

Note: FROMDS is mutually exclusive with DELETE, RELFILE, and TXLIB.

name
specifies the name of the element to be replaced. The name can contain any alphanumeric characters and $, #, @, or hex C0.

RELFILE
specifies which relative file associated with the SYSMOD contains this element. This operand is required if you provide the element in RELFILE format, rather than inline or in a TXLIB data set.

Note: RELFILE is mutually exclusive with DELETE, FROMDS, and TXLIB.

RMID
specifies the last PTF that **replaced** this data element. This operand can be used only in a service-updated function, and the specified PTF must be integrated into the function.

Note: RMID is mutually exclusive with DELETE.

SYSLIB
specifies the ddname of the target library for the specified element.

Note: SYSLIB is mutually exclusive with DELETE.

TXLIB
specifies the ddname of the partitioned data set containing the element. This operand is required if the element is provided in a TXLIB data set rather than inline or in RELFILE format.

Notes:
1. SMPTLIB cannot be used as a value on the TXLIB operand.
2. TXLIB is mutually exclusive with DELETE, FROMDS, and RELFILE.

VERSION
specifies one or more function SYSMODs that currently contain the element. The function containing the data element statement takes over ownership of the element from the specified functions.

When **VERSION** is specified on an element statement, it overrides any VERSION operand values specified on the ++VER MCS.

Usage Notes

- If the element is packaged inline, it must immediately follow the data element MCS and must not contain any records that start with the characters ++. Neither **FROMDS**, nor **RELFILE**, nor **TXLIB** can be specified on the data element MCS.
- To be packaged inline, a data element must contain fixed-block-80 records. If the original format of the element is not fixed-block-80 records, you can use GIMDTS to transform the element into the required format before packaging it. Later, when SMP/E installs the element, it is changed back to its original format. For more information about using GIMDTS, see “GIMDTS: Data Transformation Service Routine” on page 415.
- If the data element is packaged in a TXLIB data set, the ddname specified on the TXLIB operand is required during APPLY and ACCEPT processing.
- For information about packaging SYSMODs in RELFILE, TXLIB, or inline format, see the *MVS Packaging Rules* manual.

Examples

The following examples are provided to help you use the data element MCS:
- “Example 1: Packaging a CLIST in a Function”
- “Example 2: Packaging a Renamed CLIST”

Example 1: Packaging a CLIST in a Function

Here is an example of a SYSMOD containing a ++CLIST statement to install your CLIST and have SMP/E track any changes to it. It can be packaged as a function, as shown below:

```
++FUNCTION(MYCLST1)          /* Function.                */.
++VER(Z038)                  /* For MVS systems.         */.
++CLIST(CLIST1)              /* Install this CLIST       */
            TXLIB(NEWSMP)    /* from this TXLIB          */
            DISTLIB(AMACLIB) /* into this DLIB and       */
            SYSLIB(ISPCLIB)  /* this target library.     */.
```

Example 2: Packaging a Renamed CLIST

Suppose that, for some reason, you need to rename CLIST1, which was introduced in “Example 1: Packaging a CLIST in a Function”. The new name is to be CLISTX. You do not need to change anything else about the CLIST. Here is an example of a SYSMOD containing the data element statements needed to package this renamed CLIST:

```
++USERMOD(USR0001)          /* User modification        */.
++VER(Z038) FMID(MYCLST1)   /* to user application.     */.
++CLIST(CLIST1)              /* Delete the original      */
            DELETE           /* CLIST.                   */.
++CLIST(CLISTX)              /* Add the renamed CLIST    */
            TXLIB(NEWSMP)    /* from this TXLIB          */
            DISTLIB(AMACLIB) /* into this DLIB and       */
            SYSLIB(ISPCLIB)  /* this target library.     */.
```

You must ensure that the renamed CLIST is in the TXLIB library (NEWSMP) used to provide SMP/E with the element.

++DELETE MCS

During APPLY processing, the ++DELETE MCS deletes a load module and any known alias or symbolic link names from a target library and the associated target zone. It can also delete alias or symbolic link names without deleting the load module itself.

During ACCEPT processing, if inline JCLIN was processed, the distribution zone's entries are updated to reflect the ++DELETE changes. The target libraries and target zone entries are not updated.

Note: This change is not reversible. You cannot restore the SYSMOD containing the ++DELETE MCS; therefore, you cannot recreate the deleted load module.

Syntax

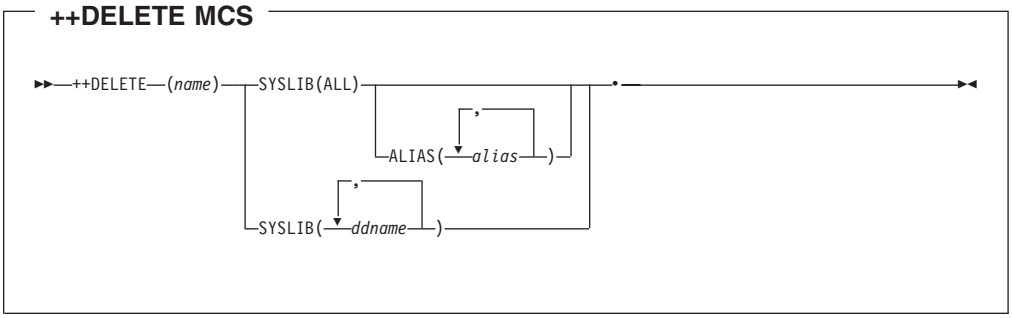

Operands

ALIAS

specifies that only the indicated alias or symbolic link names are to be deleted, but not the load module.

- An alias name can have up to 1023 characters.

  Although a load module residing in a PDSE can have an alias name greater than 8 characters, the ++DELETE statement cannot be used to delete such an alias value. To delete such an alias value without deleting the load module, you need to resupply JCLIN to define the load module without providing an ALIAS statement for the alias value to be deleted. Make sure to also include a ++MOD statement for a module in the load module to force SMP/E to relink the load module.
- Single apostrophes must be used as delimiters for an alias name in these cases:
  - The alias name contains a character that is not uppercase alphabetic, numeric, national ($, #, or @), slash (/), plus (+), hyphen, period, or ampersand (&).
  - The alias name is continued on another line in the control statement.

  Apostrophes used as delimiters do not count as part of the 1023-character limit.
- If an apostrophe is part of the alias name and is not a delimiter, it needs to be doubled. These two apostrophes count as 2 characters in the 1023-character limit.

- Characters specified must be in the range X'41' through X'FE'. Unlike the binder, SMP/E does not support shift-in (X'0F') and shift-out (X'0E') characters.
- When processing the ++DELETE statement, SMP/E uses the alias name as is, and does not enforce any rules the binder might be using as a result of the CASE execution parameter.

Notes:

1. **Do not** specify this operand if you also want to delete the load module. ++DELETE without the ALIAS operand automatically deletes any alias or symbolic link names associated with the load module.
2. When **ALIAS** is specified, SMP/E checks the ALIAS control statements in the LMOD entry to verify that the specified name is actually an alias or symbolic link of the load module. For copied load modules, instead of looking for ALIAS control statements, SMP/E checks the corresponding MOD entry's TALIAS subentries.
3. If a valid **ALIAS** value is specified, SMP/E deletes the alias from all known target libraries, including any associated side deck library, no matter what was coded for SYSLIB. SMP/E overrides the SYSLIB value with SYSLIB(ALL).
4. When you specify **ALIAS** to delete an alias for a load module, you must reflect this change using JCLIN. To do this, include a ++JCLIN statement with JCLIN data containing a link-edit step for the load module, with the alias deleted from the list of aliases on the link-edit ALIAS statement. This causes SMP/E to replace the alias list in the LMOD entry.

name
specifies the name of the load module to be deleted.

SYSLIB
specifies the ddname of the target library where the load module resides.

- If **ALL** is specified, the load module is deleted from all target libraries defined in the target zone.
- If a single ddname is specified, the load module is deleted only from the indicated target library.

  If the load module or alias is to be deleted from two target libraries, a second ddname can be specified. However, to make sure the module is deleted from both libraries, you should use **ALL** instead.
- For load modules with a SYSLIB allocation (or load modules having a CALLLIBS subentry), specifying **ALL** or deleting the load module from all the target libraries in which it resides, deletes the base version of the load module from the SMPLTS library.
- For load modules with a side deck library, specifying **ALL** or deleting the load module from all the target libraries in which it resides, deletes the associated definition side deck from the side deck library.

Note: If **ALIAS** is specified, SMP/E deletes the alias from all known target libraries, including any associated side deck library, no matter what was coded for SYSLIB. SMP/E overrides the SYSLIB value with SYSLIB(ALL).

Usage Notes

- **SYSLIB** must always be specified to identify the affected target libraries.

- **ALIAS** should be specified **only** if alias names, and not load modules, are to be deleted.
- ++DELETE statements must follow any ++VER and ++IF statements and must precede any ++JCLIN or element MCSs.
- Regardless of the order in which ++MOVE, ++RENAME, and ++DELETE statements are coded in a SYSMOD, they are always processed in this order for APPLY and ACCEPT:
  1. ++MOVE
  2. ++RENAME
  3. ++DELETE

  Afterwards, the ++JCLIN statements are processed, and then the element statements are processed.

  Note: You cannot restore the SYSMOD containing the ++DELETE MCS.

Examples

The following examples are provided to help you use the ++DELETE MCS:
- "Example 1: Deleting a Single Load Module"
- "Example 2: Deleting an Alias from a Load Module"
- "Example 3: Deleting an Alias from a Load Module in a Hierarchical File System" on page 20

Example 1: Deleting a Single Load Module

Here is an example of a SYSMOD containing a ++DELETE statement that deletes load module LMODA from SYS1.LINKLIB:

```
++PTF(UR01234)              /* Identify the PTF number. */.
++VER(Z038) FMID(HXY1300)   /* For MVS function HXY1300.*/.
++IF (ESY1300) THEN         /* If ESY1300 is installed  */
  REQ(UR12399)              /* UR12399 is required.     */.
++HOLD(UR01234)             /* Hold UR01234.            */
            FMID(HXY1300)   /* For MVS function HXY1300.*/
            SYSTEM          /* System hold              */
            REASON(DELETE)  /* because of ++DELETE.     */
            COMMENT(THIS DELETION OF LMODA FROM LINKLIB
                    IS IRREVERSIBLE).
++DELETE (LMODA)            /* Delete load module LMODA */
  SYSLIB(LINKLIB)           /* from LINKLIB.            */.
++JCLIN                     /* JCLIN follows.           */.
            •
            •
            •
++MOD(MODAA) DISTLIB(AOSXX) /* Element MCS statements.  */.
```

Example 2: Deleting an Alias from a Load Module

Assume that IBM has shipped you a PTF that deletes an alias for load module LMODA. Here is an example of a SYSMOD containing a ++DELETE statement that deletes an alias from LMODA:

```
++PTF(UR01235)              /* Identify the PTF number. */.
++VER(Z038) FMID(HXY1300)   /* For MVS function HXY1300.*/.
++HOLD(UR01235)             /* Hold UR01235.            */
            FMID(HXY1300)   /* For MVS function HXY1300.*/
            SYSTEM          /* System hold              */
            REASON(DELETE)  /* because of ++DELETE.     */
            COMMENT(THE DELETION OF THE ALIAS FOR LMODA
                    IS IRREVERSIBLE).
++DELETE (LMODA)            /* Identify LMOD LMODA.     */
  SYSLIB(ALL)               /* Process all SYSLIBs.     */
  ALIAS(OTHNAME)            /* Identify alias.          */.
```

```
++JCLIN                     /* JCLIN to delete alias.   */.
           •
           •
           •
```

Example 3: Deleting an Alias from a Load Module in a Hierarchical File System

Assume that IBM has shipped you a PTF that deletes an alias for load module BPXLMODB, which resides in a hierarchical file system. Here is an example of a SYSMOD containing a ++DELETE statement that deletes an alias from BPXLMODB:

```
++PTF(UZ00440)              /* Identify the PTF number. */.
++VER(Z038) FMID(HOP1101)   /* For MVS function HOP1101.*/.
++HOLD(UZ00440)             /* Hold UZ00440.            */
           FMID(HOP1101)    /* For MVS function HOP1101.*/
           SYSTEM           /* System hold              */
           REASON(DELETE)   /* because of ++DELETE.     */
           COMMENT(THE DELETION OF THE ALIAS FROM
                   BPXLMODB IS IRREVERSIBLE).
++DELETE (BPXLMODB)         /* Identify LMOD BPXLMODB.  */
  SYSLIB(ALL)               /* Process all SYSLIBs.     */
  ALIAS('../nicename')      /* Identify alias.          */.
++JCLIN                     /* JCLIN follows.           */.
           •
           •
           •
++MOD(BPXMODAA) DISTLIB(AOSXX) /* Element MCS statements.  */.
```

++FEATURE MCS

The ++FEATURE MCS is used to describe a set of function SYSMODs that are collectively referred to as a FEATURE. It introduces descriptive information about a new or replacement set of functions into the global zone. A ++FEATURE MCS may be associated with an orderable software feature.

Syntax

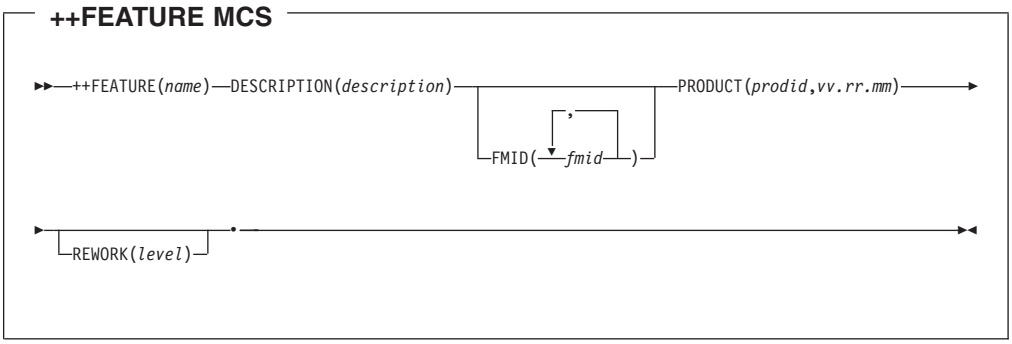

Operands

name
is a 1- to 8-character feature name. It can contain uppercase alphabetic, numeric, or national characters ($, #, @).

DESCRIPTION
describes the feature that represents this collection of function SYSMODs.

- DESCRIPTION can also be specified as DESC.
- The DESCRIPTION value can be in single-byte characters (such as English alphanumeric) or double-byte characters (such as Kanji).
- The DESCRIPTION value can contain up to 64 bytes of data, including blanks. (For double-byte data, the 64-byte maximum includes all shift-in and shift-out characters, as well as the double-byte characters.) Extra blanks as well as leading and trailing blanks are deleted.
- The DESCRIPTION value can span multiple 80-byte records. Data must continue up to and including column 72 and begin in column 1 of the next line. All data past column 72 is ignored. The break does not translate to a blank unless a blank is explicitly coded in column 72 of the first line or in column 1 of the second line.
- The DESCRIPTION value cannot be only blanks.
- If parentheses are included in the text, they must be in matched pairs.

FMID
specifies the list of all function SYSMODs that make up this feature. Each FMID is 7 characters long and must be a valid SYSMOD ID. That is, it must contain uppercase alphabetic, numeric, or national characters ($, @, #). If multiple FMIDs are specified, they must be separated by commas.

PRODUCT
identifies the *prodid* and *vv.rr.mm* of the product with which this feature is associated.

REWORK
is the level of this feature, which was reworked for minor changes. Up to eight numeric characters can be specified.

For IBM features, the REWORK level is *yyyyddd*, which is the year followed by the Julian date (for example, 2001110).

REWORK allows an updated feature to be automatically received again, as long as it is more recent than the version that has already been received. This takes the place of rejecting the feature and receiving it again.

Note: If a ++FEATURE statement appears more than once in the SMPPTFIN data set, the first occurrence may be received. However, none of the subsequent versions of the ++FEATURE statement are received, even if their rework level is higher than the one for the first version of the ++FEATURE statement.

Usage Notes

- The ++FEATURE statements are processed only when the SMPPTFIN data set is processed.
  - If the whole SMPPTFIN data set is processed, all ++FEATURE statements are processed.
  - If only selected SYSMODs are processed, SMP/E processes the ++FEATURE statements that name at least one of the selected SYSMODs in their FMID operand list.

  ++FEATURE statements are not processed when only the SMPHOLD data set is being processed.
- The *name*, DESCRIPTION, and PRODUCT values are required and cannot be blank or null.
- The ++FEATURE MCS is used in the SMPPTFIN data set and can be placed between, before, or after SYSMODs, ++FEATURE MCS, or ++PRODUCT MCS.

  If the function SYSMODs identified in the FMID operand of the ++FEATURE statement have not been previously received, the ++FEATURE statement must follow these function SYSMODs in the SMPPTFIN data set.

  The ++FEATURE statement must be followed by one of the following: a ++APAR, ++ASSIGN MCS, ++FUNCTION, ++PRODUCT, ++PTF, ++USERMOD, another ++FEATURE MCS, or an end-of-file. If one of these does not follow, SMP/E skips the ++FEATURE MCS.

Example

Here is an example of a ++FEATURE MCS for the OS/390 product.

```
++FEATURE( OS325BAS )         /* Feature definition */
  DESCRIPTION( OS/390 Base Feature ) /* Description */
  FMID(HBB6605,HMP1B00,JBB66C5,...) /* FMID List    */
  PRODUCT (5647-A01,2.5.0)    /* Owning Product     */ .
```

++FUNCTION MCS

The ++FUNCTION MCS identifies a SYSMOD as a base function or dependent function. This type of SYSMOD introduces a new or replacement function into target system and distribution libraries. All other MCSs follow this header MCS statement. For more information about packaging a function, see the *MVS Packaging Rules* manual.

Syntax

++FUNCTION MCS

```
►►──++FUNCTION(sysmod_id)──┬──────────────────────────┬──┬──────────────────────────┬──►
                           └─DESCRIPTION(description)─┘  └─FESN(fe_service_number)─┘

►──┬──────────────────────────────────────────┬──┬──────────────────────────┬──.──────►◄
   └─FILES(number)──┬──────────────────────┬─┘  └─REWORK(level)──────────┘
                    └─RFDSNPFX(relfile_prefix)─┘
```

Operands

DESCRIPTION

specifies a descriptive name to be associated with this SYSMOD. *MVS Packaging Rules* manual.

- DESCRIPTION can also be specified DESC.
- The DESCRIPTION value can be in single-byte characters (such as English alphanumeric) or double-byte characters (such as Kanji).
- The DESCRIPTION value can contain up to 64 bytes of data, including blanks. (For double-byte data, the 64-byte maximum includes all shift-in and shift-out characters, as well as the double-byte characters.) Extra blanks, as well as leading and trailing blanks are deleted.
- The DESCRIPTION value can span multiple 80-byte records. Data must continue up to and including column 72 and begin in column 1 of the next line. All data past column 72 is ignored. The break does not translate to a blank unless a blank is explicitly coded in column 72 of the first line or in column 1 of the second line.
- If DESCRIPTION is specified, it must contain at least one non-blank character.
- If parentheses are included in the text, they must be in matched pairs.

FESN

is a 7-character field engineering (FE) service number.

FILES

specifies the number of relative files belonging to this function. It can be a decimal number from 1 to 9999, and is used only if the function is packaged in relative files, rather than inline or in indirect libraries. For information about packaging SYSMODs in relative files, see the *MVS Packaging Rules* manual.

Notes:

1. Functions are generally packaged in relative files to improve SMP/E's performance when applying and accepting the SYSMOD.

2. If a packager uses a high-level qualifier on RELFILE data sets, the RFDSNPFX operand on the header MCS (not the RFPREFIX operand on the RECEIVE command) **must** be used to identify that high-level qualifier.

REWORK
is the level of this SYSMOD, which was reworked for minor changes. Up to eight numeric characters can be specified.

REWORK is generally used only for SYSMODs supplied by IBM that have been reworked for minor changes, such as for a service update or to use a ++MOVE, ++RENAME, or ++DELETE MCS. For these SYSMODs, the REWORK level is *yyyyddd*, which is the year followed by the Julian date (for example, 2001110).

REWORK allows an updated SYSMOD to be automatically received again, as long as it is more recent than the version that has already been received. This takes the place of rejecting the SYSMOD and receiving it again.

Note: If a SYSMOD appears more than once in the SMPPTFIN data set, the first occurrence may be received. However, none of the subsequent versions of the SYSMOD are received, even if their rework level is higher than the one for the first version of the SYSMOD. (Message GIM40001E is issued for each of the subsequent versions of the SYSMOD.)

RFDSNPFX
identifies to SMP/E the prefix used in the relative file data set names for this SYSMOD. SMP/E uses this prefix when allocating data set names for the SYSMOD's relative files during RECEIVE processing.

- This operand can be specified only if the FILES operand is also specified.
- The RFDSNPFX value specified on the MCS statement must match the actual prefix used in the data set names for the associated relative files.

  For example, if the names of the relative files created for a SYSMOD start with "IBM", as in **IBM.***sysmod_id***.F1**, the header MCS statement for the SYSMOD must specify **RFDSNPFX(IBM)** so SMP/E knows which prefix to use when allocating the data set names for the SYSMOD's relative files during RECEIVE processing.
- Following standard data set naming conventions, the prefix can be from 1 to 8 alphanumeric or national ($, #, @) characters or a dash (–).

  To enable full Security Server protection for tape data sets and to keep the tape header within the 17-character limit (including periods), you should limit the prefix to 1 to 3 characters. If the name exceeds the 17-character limit, only the rightmost 17 characters are written to the tape header label.

sysmod_id
is a unique 7-character name, or SYSMOD ID, for the function. This ID is also called a function modification identifier (FMID). For more information, see "Naming Conventions for SYSMODs" on page 463.

Usage Notes

A function cannot contain statements that update elements (++MACUPD, ++SRCUPD, and ++ZAP).

Examples

Here is an example of a function SYSMOD to be created with a SYSMOD ID of JXY1040 that is dependent on function JXY1000. The elements and JCL input data are members of three unloaded partitioned data sets on a tape created using the relative file method:

```
++FUNCTION(JXY1040)         /* New function SYSMOD      */
            FILES(3)        /* in RELFILE format.       */
            RFDSNPFX(IBM)   /* RELFILE prefix for IBM.  */.
++VER(Z038) FMID(JXY1000)   /* For MVS function JXY1000.*/.
++JCLIN     RELFILE(1)      /* JCLIN in RELFILE 1.      */.
++MOD(IFBMOD01)             /* This module              */
            DISTLIB(AOSFB)  /* for this DLIB            */
            RELFILE(2)      /* is in RELFILE 2.         */.
++MOD(IFBMOD02)             /* This module              */
            DISTLIB(AOSFB)  /* for this DLIB            */
            RELFILE(2)      /* is in RELFILE 2.         */.
++MAC(IFBMAC01)             /* This macro               */
            DISTLIB(AOSMAC) /* for this DLIB            */
            RELFILE(3)      /* is in RELFILE 3.         */.
```

Hierarchical File System Element MCS

The hierarchical file system element MCSs describe elements located in a hierarchical file system (HFS). Hierarchical file system elements can have any of the following characteristics:

- The record format (RECFM) must be F, FA, FM, FB, FBA, FBM, V, VA, VM, VB, VBA, or VBM.
- Elements with variable-length records cannot contain spanned records.
- The maximum LRECL is 32,654.
- The records can be numbered or unnumbered.

There are MCSs to replace hierarchical file system elements, just as there are MCSs to replace other types of elements. (There are no MCSs to update hierarchical file system elements.) Table 4 shows the MCSs that can be used for hierarchical file system elements. Table 5 on page 27 shows the *xxx* values that can be used when the MCS indicates the language being supported.

Table 4. MCS Statements for Hierarchical File System Elements. If an element is provided in only one language, the xxx can be left off the MCS. If an element is provided in more than one language, replace the xxx with the appropriate value from Table 5 on page 27.

MCS	Description
++AIX1 through ++AIX5	Elements to be used by an AIX client.
++CLIENT1 through ++CLIENT5	Elements to be used by any client (intended for clients not described by other elements types.
++HFS*xxx*	Generic hierarchical file system element (data not covered by other types)
++OS21 through ++OS25	Elements to be used by an OS/2 client.
++SHELLSCR	UNIX shell script elements.
++UNIX1 through ++UNIX5	Elements to be used by a UNIX client.
++WIN1 through ++WIN5	Elements to be used by a Windows client.

Table 5. National Language Identifiers Used for Language-Unique Elements

Value	Language	Value	Language
ARA	Arabic	HEB	Hebrew
CHS	Simplified Chinese	ISL	Icelandic
CHT	Traditional Chinese	ITA	Italian (Italy)
DAN	Danish	ITS	Italian (Switzerland)
DES	German (Switzerland)	JPN	Japanese
DEU	German (Germany)	KOR	Korean
ELL	Greek	NLB	Dutch (Belgium)
ENG	English (United Kingdom)	NLD	Dutch (Netherlands)
ENP	Uppercase English	NOR	Norwegian
ENU	English (United States)	PTB	Portuguese (Brazil)
ESP	Spanish	PTG	Portuguese (Portugal)
FIN	Finnish	RMS	Rhaeto-Romanic
FRA	French (France)	RUS	Russian
FRB	French (Belgium)	SVE	Swedish
FRC	French (Canada)	THA	Thai
FRS	French (Switzerland)	TRK	Turkish

Syntax

The syntax to be used depends on the processing to be performed for the element:
- Adding or replacing the element
- Deleting the element

Adding or Replacing a Hierarchical File System Element

Hierarchical File System Element MCS

```
►►──++element(name)──┬─BINARY─┬──┬─DISTLIB(ddname)─┬──┬──────────────────────────────────────►
                     └─TEXT───┘  └─────────────────┘  │                                      │
                                                      └─LINK(──┬──linkname──┬──)──┘
                                                               ▼            ◄─,─┘

►──┬─PARM(character_string)─┬──┬─RELFILE(number)──────────────────────────────────────────┬──►
   └────────────────────────┘  ├─TXLIB(ddname)──────────────────────────────────────────┤
                               └─FROMDS(DSN(dsn)NUMBER(n)──┬─VOL(vol)─┬──┬─UNIT(unit)─┬──)──┘
                                                           └──────────┘  └────────────┘

►──┬─RMID(sysmod_id)─┬──┬─SHSCRIPT(─scriptname──┬─PRE─┬──┬─POST─┬──)──┬──────────────────►
   └─────────────────┘  └───────────────────────┘     └────┘  └──────┘  │
                                                                         │
►──┬──────────────────────────────────────────────────────────────────────┬──┬─SYSLIB(ddname)─┬──►
   │                                                                      │  └────────────────┘
   │                  ┌─,──────────┐                  ┌─,──────────┐      │
   └─SYMLINK(──┬──symlinkname──┬──)──SYMPATH(──┬──sympathname──┬──)──┘
               ▼               ◄─,─┘           ▼               ◄─,─┘

►──┬──────────────────────────────────────────────────────────────────────┬──•──────────────►◄
   │                  ┌─,──────────┐                                      │
   └─VERSION(──┬──sysmod_id──┬──)──┘
               ▼             ◄─,─┘
```

Deleting a Hierarchical File System Element

Hierarchical File System Element MCS

```
►►──++element(name)──DELETE──┬─DISTLIB(ddname)─┬──┬──────────────────────────────────────────────────────────────────────
```

If neither BINARY nor TEXT is specified on the element MCS, SMP/E uses the mode indicator in the hierarchical file system element entry to tell the HFS copy utility how to install the element.

If neither BINARY nor TEXT is specified on the element MCS and there is no mode indicator in the hierarchical file system element entry, the HFS copy utility determines how to install the element.

DELETE
specifies that the hierarchical file system element and all of its link names and symbolic link names are to be removed from the "target library" (hierarchical file system) and the distribution library.

Notes:

1. DELETE is mutually exclusive with all other operands except DISTLIB and VERSION.
2. If the element statement is in a base function, you may want to use the DELETE operand on the ++VER MCS to delete the previous release, rather than on the element statement to delete a specific element.
3. Specification of the DELETE operand results in all link names and symbolic link names of the element being deleted along with the element identified.

DISTLIB
specifies the ddname of the distribution library for the specified hierarchical file system element. During ACCEPT processing, SMP/E installs the hierarchical file system element into the distribution library as a member. (The distribution library must be a PDS or PDSE; it cannot be part of the hierarchical file system.)

Notes:

1. **DISTLIB** must be specified when the hierarchical file system element is first installed.
2. If an element entry already exists in the target zone or distribution zone and the value currently in that entry does not match that specified in the DISTLIB operand, the SYSMOD is not applied or accepted.

element
specifies the type of element. Table 4 on page 26 shows the MCSs used for the various hierarchical file system element types.

FROMDS
identifies the partitioned data set that contains this element.

Note: The FROMDS operand and its DSN, NUMBER, VOL, and UNIT suboperands are included in the MCS generated by the BUILDMCS command. IBM does not intend the FROMDS operand to be used in manually coded MCS.

DSN specifies the dsname of the FROMDS data set. The specified data set name must conform to standard data set naming conventions and cannot contain parentheses. The maximum length of the entire name is 44 characters (including the periods).

NUMBER specifies a number that SMP/E is to use when assigning a name to the SMPTLIB data set associated with this FROMDS data set. (This is similar to the way the relative file number is used in RELFILE processing.)

VOL specifies, for an uncataloged data set, the volume serial

number of the volume containing the FROMDS data set. If specified, this volume identifier must be from 1 to 6 alphanumeric characters.

VOL may be omitted for a cataloged data set.

UNIT specifies, for an uncataloged data set, the UNIT type containing the FROMDS data set. If specified, the UNIT value must be from 1 to 8 characters and must conform to standard UNIT naming conventions. SMP/E accepts any nonblank characters specified between the open and close parentheses, up to a maximum length of 8.

UNIT may be omitted for a cataloged data set.

Note: FROMDS is mutually exclusive with DELETE, RELFILE, and TXLIB.

LINK

specifies the alternative names by which this hierarchical file system element can be known in the hierarchical file system. The full name is produced by concatenating the specified linkname with the hierarchical file system directory identified by the SYSLIB subentry. Each linkname is passed to the HFS copy utility as an execution parameter.

Notes:

1. The linkname can be from 1 to 1023 characters.
2. A linkname can be enclosed in single apostrophes (’). A linkname **must** be enclosed in single apostrophes if any of the following is true:
   - The linkname contains lowercase alphabetic characters.
   - The linkname contains a character that is not uppercase alphabetic, numeric, national ($, #, @), slash (/), plus (+), hyphen, period, or ampersand (&).
   - The linkname spans more than one line in the control statement.

   The single apostrophes used to enclose a linkname (the delimiters) do not count as part of the 1023-character limit.
3. Any apostrophes specified as part of a linkname (not the delimiters) must be doubled.

   Double apostrophes count as two characters in the 1023-character limit.
4. The linkname can include characters X'40' through X'FE'.
5. LINK values are saved and passed to the HFS copy utility as follows:
   - If LINK is specified on the element MCS, any values previously saved in the element entry are overlaid.
   - If LINK is not specified on the element MCS and saved values exist in the hierarchical file system element entry, the saved values are passed to the HFS copy utility as execution parameters.

     If LINK is not specified on the element MCS and there are no saved values in the hierarchical file system element entry, no linknames are passed to the HFS copy utility.

name

specifies the name of the hierarchical file system element member. The name can contain any uppercase alphabetic, numeric, or national ($, #, @) character and can be 1 to 8 characters long.

PARM

specifies a character string that is to be passed to the hierarchical file system copy utility as an execution-time parameter. The maximum length of this character string is 300 bytes of nonblank data. If any blanks are specified in the PARM value, they are deleted by SMP/E during processing and do not count toward the 300-byte maximum.

Notes:

1. PARM is an optional operand.
2. The character string can be entered free-form, without regard to blanks (which are compressed out of the string), and can span multiple 80-byte records.
3. If parentheses are specified in the PARM value, there must always be a pair (left and right); otherwise, the results are unpredictable.
4. PARM values are saved and passed to the HFS copy utility as follows:
   - If PARM is specified on the element MCS, any values previously saved in the hierarchical file system element entry are overlaid.
   - If PARM is not specified on the element MCS and saved values exist in the hierarchical file system element entry, the saved values are passed to the HFS copy utility as execution parameters.

     If PARM is not specified on the element MCS and there are no saved values in the hierarchical file system element entry, no parameters are saved from the element MCS or passed from the hierarchical file system element entry to the HFS copy utility.
5. If the UTILITY entry for the HFS copy utility specifies a PARM value, those parameters are passed to the utility in addition to any parameters saved in the hierarchical file system element entry.

RELFILE

identifies which relative file associated with the SYSMOD contains this element. This operand is required if you provide the element in RELFILE format, rather than inline or in a TXLIB data set.

Notes:

1. The RELFILE value must be a decimal number from 1 to 9999.
2. RELFILE is mutually exclusive with FROMDS and TXLIB.

RMID

specifies the last SYSMOD that **replaced** this element. This operand can be used only in a service-updated function, and the specified PTF must be integrated into the function.

SHSCRIPT

specifies a UNIX shell script, *scriptname*, to be invoked when the element is installed in (or deleted from) a directory of the hierarchical file system. *scriptname* can contain any uppercase alphabetic, numeric, or national ($, #, @) character and can be 1 to 8 characters long.

A shell script is commonly used to complete the installation of an element. For example, if the hierarchical file system element is a TAR or PAX file, you can provide a shell script that performs the necessary steps to restore the file.

scriptname must be the first value to follow the SHSCRIPT operand.

You define the shell script to SMP/E through a ++SHELLSCR statement, which can be within the same SYSMOD as the hierarchical file system element, or

within a SYSMOD that was processed previously. When the element is itself a SHELLSCR type, the SHSCRIPT operand must match the name of the element.

You cannot define more than one shell script for an element.

You can follow *scriptname* with either of two optional values, PRE and POST, to specify the point in SMP/E processing when the shell script is to be invoked. The following examples show how you can use the PRE and POST values:

- To run the shell script before the element is copied to the hierarchical file system directory, specify:

  `SHSCRIPT(scriptname,PRE)`
- To run the shell script after the element is copied to the hierarchical file system directory, specify:

  `SHSCRIPT(scriptname,POST)`

  or specify no value after *scriptname* to use POST by default.
- To run the shell script both before and after the element is copied to the hierarchical file system directory, specify:

  `SHSCRIPT(scriptname,PRE,POST)`

If you do not specify a PRE or POST value for the shell script, SMP/E invokes the shell script after the element is installed in the directory.

When the element is a shell script, PRE is not valid. Also, you cannot specify the SHSCRIPT operand with the DELETE operand.

SYMLINK

specifies a list of one or more symbolic links, which are file names that can be used as alternate names for referring to this element in the hierarchical file system. Each linkname listed here is associated with a pathname listed in the SYMPATH operand. For more information on how the linknames and pathnames are associated, see the description of the SYMPATH operand and “Example 3: Packaging a SYSMOD with a Symbolic Link” on page 35.

The SYMLINK value specified should be a relative path value (that is, it does not start with a slash [″/″]). When the symbolic link is created, it is created relative to the pathname of the element’s SYSLIB ddname.

SYMLINK must be specified if the **SYMPATH** operand is specified, otherwise it must be omitted.

A symbolic linkname can be from one to 1023 characters. Any characters in the range X’40’ through X’FE’ may be specified.

The value may be enclosed in single apostrophes. It **must** be enclosed in single apostrophes if:

- it is continued to the next line in the MCS, or
- it contains a character that is not uppercase alphabetic, numeric, national ($, #, @), slash (/), plus (+), hyphen, period, or ampersand (&).

If an apostrophe is a part of the symbolic linkname and is not a delimiter, then it must be doubled. These two apostrophes count as two characters against the 1023 character limit for a symbolic linkname. The single apostrophes used to enclose a symbolic linkname do not count against the 1023 character limit.

SYMPATH

specifies a list of one or more pathnames that are associated with symbolic links identified by the SYMLINK operand. The first pathname in the SYMPATH

operand is associated with the first symbolic link in the SYMLINK operand, the second pathname with the second symbolic link, and so on. If there are more symbolic links listed than there are pathnames, then the last listed pathname is used for the remaining symbolic links. If more pathnames are specified than symbolic linknames, then the excess pathnames (at the end of the list) are ignored.

The SYMPATH value specified should be a relative path value. When the symbolic link is accessed, the system assumes the destination of that link (the SYMPATH value) is relative to that symbolic link (the SYMLINK value). For more information on how the pathnames and linknames are associated, see "Example 3: Packaging a SYSMOD with a Symbolic Link" on page 35.

SYMPATH must be specified if the **SYMLINK** operand is specified, otherwise it must be omitted.

A symbolic pathname can be one to 1023 characters. Any characters in the range X'40' through X'FE' may be specified.

The value may be enclosed in single apostrophes. It **must** be enclosed in single apostrophes, if:

- it is continued to the next line in the MCS, or
- it contains a character that is not uppercase alphabetic, numeric, national ($, #, @), slash (/), plus (+), hyphen, period, or ampersand (&).

If an apostrophe is a part of the symbolic pathname and is not a delimiter, then it must be doubled. These two apostrophes count as two characters against the 1023 character limit for a symbolic pathname. The single apostrophes used to enclose a symbolic linkname do not count against the 1023 character limit.

SYSLIB

specifies the ddname of the "target library" within the hierarchical file system for the element.

During APPLY processing, the HFS copy utility installs the hierarchical file system element into the hierarchical file system. During RESTORE processing, the HFS copy utility copies the hierarchical file system element from the distribution library member into the hierarchical file system.

Note: **SYSLIB** must be specified when the hierarchical file system element is first installed.

TEXT

indicates that the hierarchical file system copy utility should install the element into the hierarchical file system (HFS) in *text* mode. This means that the element is installed with breakpoints for logical records.

Notes:

1. TEXT is mutually exclusive with BINARY.
2. When TEXT is specified on the element MCS, SMP/E sets the TEXT mode indicator in the hierarchical file system element entry. When BINARY is specified on the element MCS, SMP/E sets the BINARY mode indicator in the hierarchical file system element entry.

   If neither BINARY nor TEXT is specified on the element MCS, SMP/E uses the mode indicator in the hierarchical file system element entry to tell the HFS copy utility how to install the element.

If neither BINARY nor TEXT is specified on the element MCS and there is no mode indicator in the hierarchical file system element entry, the HFS copy utility determines how to install the element.

TXLIB
is the ddname of the partitioned data set containing the hierarchical file system element. This operand is required if the hierarchical file system element is provided in a data set that the users have access to, rather than inline or in RELFILE format.

Notes:
1. SMPTLIB cannot be used as a value on the TXLIB operand.
2. TXLIB is mutually exclusive with FROMDS and RELFILE.

VERSION
specifies one or more function SYSMODs that currently contain the element. The function containing the element MCS takes over ownership of the element from the specified functions.

When **VERSION** is specified on an element statement, it overrides any VERSION operand values that might be specified on the ++VER MCS.

Usage Notes

- If the hierarchical file system element is packaged inline, it must immediately follow the hierarchical file system element MCS and must not contain any records starting with ++. Neither **FROMDS**, nor **RELFILE**, nor **TXLIB** can be specified on the hierarchical file system element MCS.
- To be packaged inline, a hierarchical file system element must contain fixed-block–80 records. If the original format of the element is not fixed-block–80 records, you can use GIMDTS to transform the element into the required format before packaging it. Later, when SMP/E installs the element, it is changed back to its original format. For more information about using GIMDTS, see “GIMDTS: Data Transformation Service Routine” on page 415.
- If the hierarchical file system element is packaged in a TXLIB data set, the ddname specified in the TXLIB operand is required during APPLY and ACCEPT processing.
- For information about elements packaged in RELFILE format, see the *MVS Packaging Rules* manual.
- A ++HFS MCS can be used to supply a pre-built program object to be placed into the hierarchical file system. A user can do an OGET for an existing program object in the file system to cause the program object to be placed into an MVS data set as fixed length records. This data can then be packaged as a ++HFS element with the BINARY operand. The HFS copy utility can then copy the element into the file system as a binary entity, which can then be executed.

Examples

The following examples are provided to help you use the hierarchical file system element MCS:
- “Example 1: Packaging a Hierarchical File System Element in a Function” on page 35
- “Example 2: Packaging a Renamed Hierarchical File System Element” on page 35
- “Example 3: Packaging a SYSMOD with a Symbolic Link” on page 35

Example 1: Packaging a Hierarchical File System Element in a Function

Here is an example of a SYSMOD containing a hierarchical file system element statement to install your element and have SMP/E track any changes to it. The element:

- Uses the Japanese language
- Is to be installed in BINARY mode
- Can also be known by its linkname “USERHFS”
- Is to be processed by shell script “UNTAR” after the element is copied to the hierarchical file system directory.

The element can be packaged in a function, as shown below:

```
++FUNCTION(MYHFSEL)            /* Function.            */.
++VER(Z038)                    /* For MVS SRELs.       */.
++HFSJPN(HFSELEM1)             /* Install this element */
            TXLIB(NEWHFS)      /* from this TXLIB          */
            DISTLIB(ABPXLIB)   /* into this DLIB and       */
            SYSLIB(BPXLIB1)    /* this target library.     */
            BINARY             /* Use BINARY mode.         */
            LINK('../USERHFS') /* Define linkname.         */
            SHSCRIPT(UNTAR,POST) /* Untar the file with the UNTAR exec. */.
```

To install the function, you need to specify DDDEF entries or DD statements for the TXLIB, DISTLIB, and SYSLIB data sets. Remember that the SYSLIB data set is actually a pathname in the hierarchical file system. For an example of defining a pathname in a DDDEF entry, see “Example 10: Defining Pathnames in a Hierarchical File System” on page 189.

Example 2: Packaging a Renamed Hierarchical File System Element

Suppose that, for some reason, you need to rename HFSELEM1, which was introduced in “Example 1: Packaging a Hierarchical File System Element in a Function”. The new name is to be HFSELEMX. You do not need to change anything else about the hierarchical file system element. Here is an example of a SYSMOD containing the hierarchical file system element statements needed to package this renamed hierarchical file system element:

```
++USERMOD(USR0001)             /* User modification      */.
++VER(Z038) FMID(MYHFSEL)      /* to user application.   */.
++HFSJPN(HFSELEM1)             /* Delete the original    */
            DELETE             /* HFS element.           */.
++HFSJPN(HFSELEMX)             /* Add the renamed element*/
            TXLIB(NEWHFS)      /* from this TXLIB        */
            DISTLIB(ABPXLIB)   /* into this DLIB and     */
            SYSLIB(BPXLIB1)    /* this target library.   */
            TEXT               /* Use TEXT mode.         */
            LINK('../USERHFS') /* Define linkname.       */.
```

To install the USERMOD, you need to specify DDDEF entries or DD statements for the TXLIB, DISTLIB, and SYSLIB data sets. Remember that the SYSLIB data set is actually a pathname in the hierarchical file system. For an example of defining a pathname in a DDDEF entry, see “Example 10: Defining Pathnames in a Hierarchical File System” on page 189.

You must also ensure that the renamed hierarchical file system element is in the TXLIB library used to provide SMP/E with the element.

Example 3: Packaging a SYSMOD with a Symbolic Link

Here is an example of a SYSMOD containing a hierarchical file system element statement to install your element with a symbolic link. The element:

Hierarchical File System Element MCS

- Is to be installed in TEXT mode
- Can be known by its linkname “/usr/lpp/gskssl/include/gskssl.h”
- Can also be known by its symbolic link “/usr/include/gskssl.h”.

The element can be packaged in a function, as shown below:

```
++FUNCTION(SAMPLE)            /* Function.            */.
++VER(Z038)                   /* For MVS SRELs.       */.
++HFS(GSKAH010)               /* Install this element */
            RELFILE(2)        /* from a RELFILE           */
            DISTLIB(AGSKHFS)  /* into this DLIB and       */
            SYSLIB(SGSKHFS)   /* this target library.     */
            LINK('../include/gskssl.h')
                              /* Define linkname.         */
            SYMLINK('../../../../usr/include/gskssl.h')
                              /* Define symbolic link     */
            SYMPATH('../../usr/lpp/gskssl/include/gskssl.h')
                              /* Define path name.        */
            PARM(PATHMODE(0,6,4,4))
                              /* HFS copy utility parameters */
            TEXT              /* Use TEXT mode.           */.
```

To install the function, you need to specify DDDEF entries or DD statements for the DISTLIB and SYSLIB data sets. Remember that the SYSLIB data set is actually a pathname in the hierarchical file system. In this example, the DDDEF for SYSLIB must be defined as follows:

```
UCLIN.
ADD DDDEF(SGSKHFS) PATH('/service/usr/lpp/gskssl/IBM/').
ENDUCLIN.
```

When SMP/E installs file GSKAH010 into the directory specified on the given DDDEF entry, the LINK and SYMLINK values will be resolved relative to the DDDEF directory. The file will then be known by the following absolute path names in the hierarchical file system:

Source	Resolved absolute pathname
SMP/E element name	/service/usr/lpp/gskssl/IBM/GSKAH010
LINK name	/service/usr/lpp/gskssl/include/gskssl.h
SYMLINK name	/service/usr/include/gskssl.h

The contents of a symbolic link (SYMLINK) is its associated SYMPATH. In this case, the contents of the symbolic link is ″../../usr/lpp/gskssl/include/gskssl.h″. When a symbolic link is resolved, its content is resolved relative to the symbolic link itself. That is, the SYMPATH value is relative to the SYMLINK value. Therefore, in this case, the SYMPATH value resolves to the LINK name, ″/service/usr/lpp/gskssl/include/gskssl.h″.

++HOLD MCS

The ++HOLD MCS identifies a SYSMOD to be placed into exception SYSMOD status (signifying that special SMP/E processing is required before it can be applied or accepted). ++HOLD statements can occur within a SYSMOD (internal HOLDDATA), or they can be read directly from the SMPHOLD file during RECEIVE processing (external HOLDDATA). For additional information on processing the ++HOLD statements, see the *SMP/E Commands* manual.

Syntax

++HOLD MCS

```
►►──++HOLD(sysmod_id)──┬─ERROR──REASON(reason_id)──────────┬──FMID(fmid)──┬──────────────┬──►
                       ├─USER──REASON(reason_id)──────────┤              └─DATE(yyddd)──┘
                       └─SYSTEM──REASON(─┤ Reason-ID ├─)──┘

►──┬──────────────────┬──┬──────────────────────────────┬──.──►◄
   └─CLASS(──class──)─┘  ├─COMMENT(text)────────────────┤
                         └─COMMENT(─┤ Enhanced HOLDDATA text ├─)─┘
```

SYSTEM Reason IDs Used by IBM:

```
├──┬─ACTION──┬──────────────────────────────────────────────────────────┤
   ├─AO──────┤
   ├─DB2BIND─┤
   ├─DELETE──┤
   ├─DEP─────┤
   ├─DOC─────┤
   ├─EC──────┤
   ├─ENH─────┤
   ├─EXIT────┤
   ├─EXRF────┤
   ├─FULLGEN─┤
   ├─IOGEN───┤
   ├─IPL─────┤
   ├─MSGSKEL─┤
   └─RESTART─┘
```

Enhanced HOLDDATA Text Used by IBM:

```
├──SMRTDATA(CHGDT(yymmdd)──┬──────────────┬──┬──────────────┬──)──────────────────────────┤
                           └─FIX(sysmod_id)─┘  └─SYMP(symptoms)─┘
```

Operands

CLASS

a 1- to 7-character string indicating an alternative reason to release an exception SYSMOD for processing. A class name is specified along with a

reason ID to identify a condition when the reason ID need not be resolved. The same class name can be specified on any number of ++HOLD statements in any number of SYSMODs.

These are the specific values currently used by IBM:

Class	Explanation
ERREL	The SYSMOD is held for an error reason ID but should be installed anyway. IBM has determined that the problem the SYSMOD resolves is significantly more critical than the error reflected by the holding APAR.
HIPER	The SYSMOD is held with a hold class of HIPER (High Impact)
PE	The SYSMOD is held with a hold class of “PTF in Error”.
UCLREL	UCLIN needed for the SYSMOD has been handled by IBM and no longer requires your attention.
YR2000	Identifies PTFs that provide Year 2000 function, or fix a Year 2000-related problem.

For additional information, see “Naming Conventions for HOLD Reason IDs and HOLD Classes” on page 460.

COMMENT(text)
free-form text to be used to describe the problem identified by the REASON operand. The comments supplied are associated only with the reason ID supplied. The comments can be in single-byte characters (such as English alphanumeric characters) or double-byte characters (such as Kanji).

COMMENT(Enhanced HOLDDATA)
contains IBM–supplied Enhanced HOLDDATA, as follows:

SMRTDATA
indicates that the COMMENT operand contains Enhanced HOLDDATA.

CHGDT
specifies the date that the ++HOLD statement was last updated with Enhanced HOLDDATA. The date is specified as *yymmdd*, where *yy* is the last two digits of the year, *mm* is the month and *dd* is the date of the month.

FIX identifies the SYSMOD that resolves the held SYSMOD.

SYMP contains a description of the hold. The description may include symbols representing symptoms of the problem, a description of the problem in text form, or a combination of both.

The symbols that represent symptoms identify how the problem affects the held SYSMOD.

The symbols that may appear and their meanings are:

DAL	Data Loss
FUL	Major Function Loss
IPL	System Outage (Requires IPL)
PRF	Performance
PRV	Pervasive
SYSPLXDS	SYSPLEX data sharing

XSYSTEM Cross-system migration, compatibility, or toleration

YR2000 Year 2000

The SYMP field can be no more than 30 characters in length. Parentheses can be used within the field, but they must be matched pairs.

DATE
specifies the date that the ++HOLD statement was generated. The date is specified as *yyddd*, where *yy* is the last two digits of the year and *ddd* is the Julian date.

ERROR, SYSTEM, or USER
specifies the hold category into which the SYSMOD is to be put. At least one of the values must be specified.

ERROR An APAR reported an error in the SYSMOD. The SYSMOD should not be processed until the APAR is resolved. A PTF held for this reason is also called a *program error PTF*, or PE-PTF. SMP/E automatically releases the SYSMOD when a SYSMOD that supersedes the APAR is processed. Error holds can be provided in a separate HOLD file or data set, such as SMPHOLD.

Note: ERROR can also be specified as **ERR**.

SYSTEM Special action outside normal SMP/E processing is required for the SYSMOD. Examples are SYSMODs requiring a SYSGEN after they are installed, or SYSMODs requiring the installation of an associated engineering change (EC) level. System holds can appear in the SYSMOD itself or in a separate HOLD input file.

Note: SYSTEM can also be specified as **SYS**.

USER The SYSMOD requires special processing because of a decision you have made. User holds can be provided in a separate hold file or data set, such as SMPHOLD.

FMID
specifies the FMID to which the held SYSMOD is applicable. For external HOLDDATA (a ++HOLD statement not within a SYSMOD), this information allows SMP/E to receive only those statements associated with FMIDs defined in the user's global zone. This operand is required.

REASON
a 1- to 7-character string used to help users identify the reason why the SYSMOD is being put into exception SYSMOD status. The reason IDs that can be specified depend on the type of hold.

Note: A SYSMOD can contain only one ++HOLD MCS for each required reason ID.

- An *error reason ID* is the APAR number that caused the SYSMOD to be placed in exception status.
- A *system reason ID* identifies some special processing the SYSMOD requires. Although SMP/E accepts any 1- to 7-character alphanumeric string as a system reason ID, these are the values currently used by IBM on ++HOLD statements:

ID	Explanation
ACTION	The SYSMOD needs special handling before or during APPLY processing, ACCEPT processing, or both.
AO	The SYSMOD may require action to change automated operations procedures and associated data sets and user exits in products or in customer applications. The PTF cover letter describes any changes (such as to operator message text, operator command syntax, or expected actions for operator messages and commands) that can affect automation routines.
DB2BIND	A DB2 application REBIND is required for the SYSMOD to become effective.
DELETE	The SYSMOD contains a ++DELETE MCS, which deletes a load module from the system.
DEP	The SYSMOD has a software dependency.
DOC	The SYSMOD has a documentation change that should be read before the SYSMOD is installed.
EC	The SYSMOD needs a related engineering change.
ENH	The SYSMOD contains an enhancement, new option or function. The HOLD statement provides information to the user regarding the implementation and use of the enhancement.
EXIT	The SYSMOD contains changes that may affect a user exit. For example, the interface for an exit may be changed, an exit may need to be reassembled, or a sample exit may be changed.
EXRF	The SYSMOD must be installed in both the active and the alternative Extended Recovery Facility (XRF) systems at the same time to maintain system compatibility. (If you are not running XRF, you should bypass this reason ID.)
FULLGEN	The SYSMOD needs a complete system or subsystem generation to take effect.
IOGEN	The SYSMOD needs a system or subsystem I/O generation to take effect.
IPL	The SYSMOD requires an IPL to become effective. For example, the SYSMOD may contain changes to LPA or NUCLEUS, the changes may require a CLPA, or a failure to perform an IPL might lead to catastrophic results, such as could be caused by activation of a partial fix. **Note:** If you plan to perform an IPL with CLPA after the SYSMOD has been applied, then no further investigation of the HOLD is required; simply bypass the IPL reason ID. However, if you are not planning to perform an IPL with CLPA, then the details of the HOLD statement must be investigated to determine what kind of actions are required to activate the SYSMOD.
MSGSKEL	This SYSMOD contains message changes that must be

compiled for translated versions of the message changes to become operational on extended TSO consoles.

If you want to use translated versions of the messages, you must run the message compiler once for the library containing the English message outlines, and once for each additional language you want to be available on your system. For details, see *z/OS MVS Planning: Operations*.

If you want to use **only** the English version of the messages, you do not need to run the message compiler. You should bypass this reason ID.

RESTART To become effective, the SYSMOD requires a special subsystem restart operation. The HOLD statement contains information regarding the required restart actions.

- A *user reason ID* is defined by the user.

For additional information, see "Naming Conventions for HOLD Reason IDs and HOLD Classes" on page 460.

sysmod_id
If the ++HOLD is being processed from the SMPHOLD data set, *sysmod_id* specifies the name of the SYSMOD to be placed into exception SYSMOD status.

If the ++HOLD is internal to a SYSMOD, then *sysmod_id* specifies either the SYSMOD that contains the ++HOLD or the originating SYSMOD that contained the ++HOLD and is now superseded by the current SYSMOD.

This operand is required.

Usage Notes

- If the text within the COMMENT operand contains parentheses, they must be in matched pairs. For example:

```
COMMENT ( ADD 'PARM(COND(5))' ON THE EXEC )
```

  This works, but the following statements result in an error:

```
COMMENT ( ADD OPENING PARENTHESES '(' )
```

  or

```
COMMENT ( ADD CLOSING PARENTHESES ')' )
```

- The following restrictions apply only to ++HOLD MCSs packaged within a SYSMOD:
  - The only HOLD type allowed is SYSTEM.
  - ++HOLD statements must be placed after all ++VER and ++IF statements and before the first ++JCLIN or element statement.
  - The SYSMOD ID on the ++HOLD MCS must match either the SYSMOD containing the ++HOLD MCS, or the originating SYSMOD that contained the ++HOLD MCS and is now superseded by the current SYSMOD.

Examples

The following examples are provided to help you use the ++HOLD MCS:

- "Example 1: Noting a Special Documentation Change" on page 42
- "Example 2: Marking a PTF That Is in Error" on page 42
- "Example 3: Specifying a Hold Class" on page 42

Example 1: Noting a Special Documentation Change

Here is an example of a SYSMOD containing a ++HOLD statement. PTF UZ12345, which is applicable to function FXY1040, introduces a documentation change that the system operator should know about.

```
++PTF(UZ12345)              /* PTF modification.        */.
++VER(Z038) FMID(FXY1040)   /* For MVS product FXY1040. */
                            /* No prerequisites.        */.
++HOLD     (UZ12345)        /* Hold this PTF            */
           FMID(FXY1040)    /* for this function        */
           SYSTEM           /* for system processing and*/
           REASON(DOC)      /* for doc change.          */
           COMMENT(this PTF changes operator console
                   message xxx1233. A reply of U is
                   required to this message ).
++MOD(IFBMOD01)             /* Change this module       */
           DISTLIB(AOS12)   /* in this DLIB.            */.
```

Example 2: Marking a PTF That Is in Error

When IBM discovers errors in PTFs it has already shipped, it provides information about these program error PTFs (PE-PTFs) in RETAIN. To make sure these PTFs are held, you can use the RETAIN information to build ++HOLD statements for the PTFs.

Note: In this example, because only ++HOLD statements are being shown, none of them are underlined.

```
++HOLD     (UZ12345)        /* Hold this PTF            */
           FMID(FXY1040)    /* for this function        */
           ERROR            /* for APAR fix.            */
           REASON(AZ00001)  /* APAR is AZ00001.         */
           COMMENT(this APAR causes loop)  /*           */.
++HOLD     (UZ12345)        /* Hold this PTF            */
           FMID(FXY1040)    /* for this function        */
           ERROR            /* for APAR fix.            */
           REASON(AZ00002)  /* APAR is AZ00002.         */
           COMMENT(this APAR causes 0C4)   /*           */.
++HOLD     (UZ12346)        /* Hold this PTF            */
           FMID(FXY1040)    /* for this function        */
           ERROR            /* for APAR fix.            */
           REASON(AZ00003)  /* APAR is AZ00003.         */
           COMMENT(incorrect output on console)  /*     */.
++HOLD     (UZ12347)        /* Hold this PTF            */
           FMID(FXY1040)    /* for this function        */
           ERROR            /* for APAR fix.            */
           REASON(AZ00004)  /* APAR is AZ00004.         */
                            /* Integrity - no comment.  */.
```

Example 3: Specifying a Hold Class

Here is an example of a SYSMOD containing a ++HOLD statement for a PTF requiring a change that applies only if a Year 2000-related fix is desired.

```
++PTF(UZ12345)              /* PTF modification.        */.
++VER(Z038) FMID(FXY1040)   /* For MVS product FXY1040. */
           .                /* No prerequisites.        */
++HOLD     (UZ12345)        /* Hold this PTF            */
           FMID(FXY1040)    /* for this function        */
           ERROR            /* for APAR fix.            */
           REASON(AQ19558)  /* APAR is AQ19558.         */
           COMMENT(SMRTDATA(FIX(UQ21725)
                   SYMP(YR2000) CHGDT(981019)))
           CLASS(YR2000)    /* This change is required  */
                            /* only for Yr 2000 support.*/.
++MOD(IFBMOD01)             /* Change this module       */
           DISTLIB(AOS12)   /* in this DLIB.            */.
```

++IF MCS

The ++IF MCS specifies requisites that must be installed with a SYSMOD if a certain function is installed. If the specified function is installed in the zone that SMP/E is trying to install this SYSMOD into, the requisite must also be installed in that zone; otherwise SMP/E does not install the SYSMOD containing the ++IF MCS. If the specified function is not yet installed in the zone where SMP/E is trying to install this SYSMOD, SMP/E saves the information from the ++IF MCS in case the specified function is installed later.

++IF statements are interpreted, reformatted, and placed in the target zone data set during APPLY processing and in the distribution zone data set during ACCEPT processing.

++IF statements can describe dependencies between two products, even if those products have different SRELs and are defined in different zones. The information from these statements is used by the REPORT command to identify cross-zone requisites—that is, conditional requisites needed in one zone because of ++IF statements in a SYSMOD installed in another zone.

A ++IF statement is associated with the ++VER MCS preceding it in the SYSMOD. Multiple ++IF statements can be specified following each ++VER MCS.

Syntax

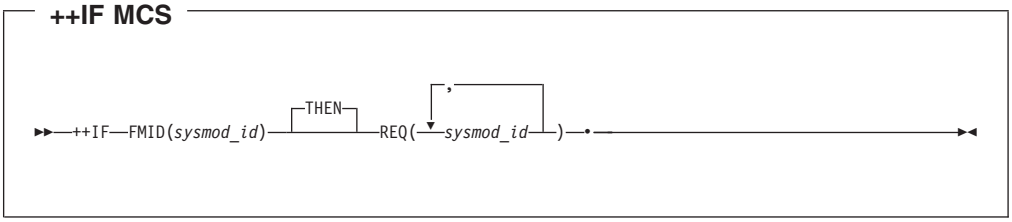

Operands

FMID
specifies the function that is to be checked to determine whether it is installed in one of the following:
- The target libraries (for APPLY processing)
- The distribution libraries (for ACCEPT processing)

This operand is required. It is not satisfied by superseded FMIDs.

REQ
specifies the SYSMODs that are needed if the function SYSMOD specified on the FMID operand of the ++IF MCS is installed. This operand is required.

THEN
specifies that the requisite for the ++IF MCS follows.

Usage Notes

- The operands must be specified in the order shown in the syntax.
- The function specified for FMID must be different from the SYSMOD ID on the header statement.

Examples

PTF UZ00004 contains service for elements belonging to function FXY1040. If function FXY1050 is installed in the same zone, PTF UZ00005 must also be installed in that zone in order for PTF UZ00004 to be installed successfully. If function FXY1050 is not presently installed, PTF UZ00005 is not required; however, SMP/E saves the ++IF MCS in case function FXY1050 is installed in the future. Then, when FXY1050 is installed, PTF UZ00005 is considered an unsatisfied conditional requisite that must also be installed.

Here is an example of a SYSMOD containing a ++IF statement to define UZ00005 as a conditional requisite:

```
++PTF(UZ00004)                /* PTF SYSMOD.              */.
++VER(Z038) FMID(FXY1040)     /* For MVS product FXY1040. */.
++IF        FMID(FXY1050)     /* If FXY1050 is on, or     */
            THEN              /* when it's put on later,  */
            REQ(UZ00005)      /* UZ00005 is required.     */.
++MOD(IFBMOD01)               /* Replace this module      */
            DISTLIB(AOSFB)    /* in this DLIB.            */.
++MACUPD(IFBMAC01)            /* Update this macro        */
            DISTLIB(IFBMACS)  /* in this DLIB.            */.
```

++JCLIN MCS

The ++JCLIN MCS identifies the start of the job control language (JCL) input that must be processed as part of installing the SYSMOD. The JCLIN input is used to identify the structure of the target system libraries to SMP/E so that the modules, macros, and source code being replaced can be installed correctly. Processing of ++JCLIN input during APPLY or ACCEPT is similar to the processing done for the JCLIN command. For an additional description of JCLIN processing, see the *SMP/E Commands* manual.

Note: The ++JCLIN MCS does **not** cause SMP/E to update the target or distribution libraries; only the entries in the target and distribution zones are updated. These libraries are updated when SMP/E processes the elements in the SYSMOD. The element statements in the SYSMOD determine which elements should be installed and cause SMP/E to invoke the utilities that install the elements.

Syntax

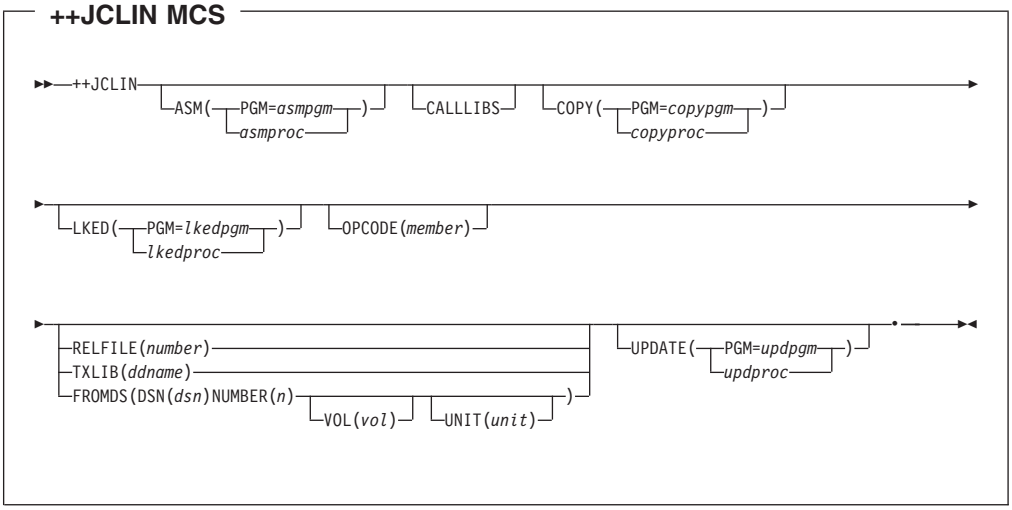

Operands

ASM
specifies the name of the assembler program or procedure that is used in the JCLIN data. This operand must be specified if the name is different from those recognized by SMP/E, which are the program names ASMBLR, ASMA90, IEUASM, IEV90, and IFOX00, and procedure name ASMS.

CALLLIBS
specifies that SMP/E is to process SYSLIB DD statements in JCLIN link-edit steps. SYSLIB DD statements are processed only if the CALLLIBS operand is specified on the JCLIN command or ++JCLIN MCS, or if //*CALLLIBS=YES is encountered after a job card preceding a link-edit step. If the CALLLIBS operand or the CALLLIBS comment is not specified, SMP/E ignores any SYSLIB DD statements it encounters.

COPY
specifies the name of the copy program or procedure that is used in the JCLIN data. This operand must be specified if the name is different from that recognized by SMP/E, which is the program name IEBCOPY.

FROMDS
identifies the partitioned data set that contains this element.

Note: The FROMDS operand and its DSN, NUMBER, VOL, and UNIT suboperands are included in the MCS generated by the BUILDMCS command. IBM does not intend the FROMDS operand to be used in manually coded MCS.

DSN
specifies the dsname of the FROMDS data set. The specified data set name must conform to standard data set naming conventions and cannot contain parentheses. The maximum length of the entire name is 44 characters (including the periods).

NUMBER
specifies a number that SMP/E is to use when assigning a name to the SMPTLIB data set associated with this FROMDS data set. (This is similar to the way the relative file number is used in RELFILE processing.)

VOL
specifies, for an uncataloged data set, the volume serial number of the volume containing the FROMDS data set. If specified, this volume identifier must be from 1 to 6 alphanumeric characters.

VOL may be omitted for a cataloged data set.

UNIT
specifies, for an uncataloged data set, the UNIT type containing the FROMDS data set. If specified, the UNIT value must be from 1 to 8 characters and must conform to standard UNIT naming conventions. SMP/E accepts any nonblank characters specified between the open and close parentheses, up to a maximum length of 8.

UNIT may be omitted for a cataloged data set.

Note: FROMDS is mutually exclusive with DELETE, RELFILE, and TXLIB.

LKED
specifies the name of the link-edit program or procedure that is used in the JCLIN data. This operand must be specified if the name is different from those recognized by SMP/E, which are the program names HEWL, HEWLH096, HEWLKED, IEWBLINK, IEWL, and LINKEDIT, and procedure name LINKS.

OPCODE
identifies an OPCODE member containing control statements identifying character strings to be treated as OPCODEs or macros.

PGM
specifies a program name (instead of a procedure name) for a utility.

RELFILE
specifies the relative position, within the files associated with this SYSMOD, of the file containing the JCLIN data as one of its members.

The member in the RELFILE data set containing the JCLIN input data must match the SYSMOD's SYSMOD ID; for example, the JCLIN for ++PTF(UZ11111) is supplied in member UZ11111 of the unloaded PDS identified by the RELFILE operand.

Note: RELFILE is mutually exclusive with FROMDS and TXLIB.

TXLIB
specifies the ddname of a partitioned data set containing the JCLIN data as one of its members.

The member of the TXLIB data set containing the JCLIN input data must match the SYSMOD's SYSMOD ID; for example, the JCLIN for ++PTF(UZ11111) is supplied in member UZ11111 of the data set identified by the TXLIB operand.

Notes:
1. SMPTLIB cannot be used as a value on the TXLIB operand.
2. TXLIB is mutually exclusive with FROMDS and RELFILE.

UPDATE
specifies the name of the update program or procedure that is used in the JCLIN data. This operand must be specified if the name is different from that recognized by SMP/E, which is the program name IEBUPDTE.

Usage Notes

- If the JCLIN data is packaged inline, it must immediately follow the ++JCLIN MCS and must not contain any records that start with ++. Neither **FROMDS**, nor **RELFILE**, nor **TXLIB** can be specified on the ++JCLIN MCS.
- If the JCLIN data is packaged in a TXLIB data set, the ddname specified on the TXLIB operand is required during APPLY and ACCEPT processing.
- For information about packaging SYSMODs in RELFILE format, see the *MVS Packaging Rules* manual.

Examples

For these examples, assume function JXY1040 contains some inline JCLIN, one module (IFBMOD01), and one macro (IFBMAC01). The same format was used to package the JCLIN and the elements.

Note: Even though the examples are for a function, they are equally valid for PTFs, APARs, and USERMODs.

The following examples are provided to help you use the ++JCLIN MCS:

- "Example 1: ++JCLIN Data Packaged Inline"
- "Example 2: ++JCLIN Data Packaged in a RELFILE" on page 48
- "Example 3: ++JCLIN Data Packaged in a TXLIB with a User Utility Program Name" on page 48

Example 1: ++JCLIN Data Packaged Inline

Here is an example of a SYSMOD containing a ++JCLIN statement for packaging JCLIN inline:

```
++FUNCTION(JXY1040)         /* Function SYSMOD.         */.
++VER(Z038)                 /* For MVS, no requisites.  */.
++JCLIN                     /* JCLIN is required.       */.
//JOB      JOB 'accounting info',MSGLEVEL=(1,1)
//STEP1    EXEC PGM=IEWL
//SYSLMOD  DD DSN=SYS1.LINKLIB,DISP=SHR
//AOS12    DD DSN=SYS1.AOS12,DISP=SHR
//SYSLIN   DD *
 INCLUDE AOS12(IFBMOD01)
 ENTRY   IFBMOD01
 ALIAS   IFBMOD01A
 NAME    IFBMOD01(R)
/*
++MOD(IFBMOD01)             /* This module              */
            DISTLIB(AOS12)  /* for this DLIB.           */.
```

```
...
... object deck for IFBMOD01
...
++MAC(IFBMAC01)             /* This macro               */
            DISTLIB(AMACLIB) /* for this DLIB.          */.
...
... macro replacement for IFBMAC01
...
```

No special DD statements, other than those for the target and DLIBs, are required to process this SYSMOD.

During APPLY, SMP/E processes the ++JCLIN data, determines that module IFBMOD01 gets linked into load module IFBMOD01 (which has an alias), stores information in the target zone, and then invokes the proper utilities to install the module and macro.

Example 2: ++JCLIN Data Packaged in a RELFILE

Here is an example of a SYSMOD containing a ++JCLIN statement for packaging JCLIN in relative files. No special ++JCLIN operands are required.

```
++FUNCTION(JXY1040)         /* Function SYSMOD          */
            FILES(3)        /* in RELFILE format.       */.
++VER(Z038)                 /* For MVS, no requisites.  */.
++JCLIN                     /* JCLIN is required.       */
            RELFILE(1)      /* Data is in first RELFILE.*/.
++MOD(IFBMOD01)             /* This module              */
            DISTLIB(AOS12)  /* for this DLIB            */
            RELFILE(2)      /* is in second RELFILE.    */.
++MAC(IFBMAC01)             /* This macro               */
            DISTLIB(AMACLIB)/* for this DLIB            */
            RELFILE(3)      /* is in third RELFILE.     */.
```

The SMPTLIB DD statement is required for the RECEIVE command to load the RELFILE data sets from tape onto DASD, and at APPLY and ACCEPT, in order to access the data in the unloaded partitioned data sets on DASD.

Note: Different RELFILE data sets are required for the module and macro, because they are in different formats (modules must be in load module format, RECFM=U, while macros are RECFM=FB). Although a separate RELFILE data set was used to contain the ++JCLIN data, that data could have been put into the data set with the macros, because both have the same attributes (LRECL=80, RECFM=FB).

Example 3: ++JCLIN Data Packaged in a TXLIB with a User Utility Program Name

Here is an example of a SYSMOD containing a ++JCLIN statement for packaging JCLIN in text libraries. The JCLIN contains assembly steps using a special link-edit utility, ALTIEWL.

```
++FUNCTION(JXY1040)         /* Function SYSMOD.         */.
++VER(Z038)                 /* For MVS, no requisites.  */.
++JCLIN                     /* JCLIN is required.       */
            TXLIB(LIB1040)  /* Data is in text library. */
            LKED(PGM=ALTIEWL)  /* Use other link-edit.  */.
++MOD(IFBMOD01)             /* This module              */
            DISTLIB(AOS12)  /* for this DLIB            */
            TXLIB(LIB1040)  /* is in text library.      */.
++MAC(IFBMAC01)             /* This macro               */
            DISTLIB(AMACLIB)/* for this DLIB            */
            TXLIB(LIB1040)  /* is in text library.      */.
```

A DD statement for LIB0104 is required during APPLY and ACCEPT in order for SMP/E to call the utilities to get the replacements installed into the operating system libraries. An example of the DD statement is:

```
//LIB1040  DD DSN=...
```

Note: In this case, the replacements for all three elements were put in one data set. That data set must contain three members: member JXY1040 must be the JCLIN data, member IFBMOD01 must contain the object deck for module IFBMOD01, and member IFBMAC01 must contain the replacement for macro IFBMAC01. Because all have the same formats (that is, RECFM=FB LRECL=80) they can be packaged in one data set.

Member JXY1040 looks as follows:

```
//JOB      JOB 'accounting info',MSGLEVEL=(1,1)
//STEP1    EXEC PGM=ALTIEWL
//SYSLMOD  DD DSN=SYS1.LINKLIB,DISP=SHR
//AOS12    DD DSN=SYS1.AOS12,DISP=SHR
//SYSLIN   DD *
 INCLUDE AOS12(IFBMOD01)
 ENTRY   IFBMOD01
 ALIAS   IFBMOD01A
 NAME    IFBMOD01(R)
/*
```

Note the use of ALTIEWL on the EXEC statement.

++MAC MCS

The ++MAC MCS describes a single macro replacement. It must immediately precede the macro definition statements when they are within the SYSMOD.

Syntax

The syntax to be used depends on the processing to be done for the element:
- Adding or replacing the element
- Deleting the element

Adding or Replacing a Macro

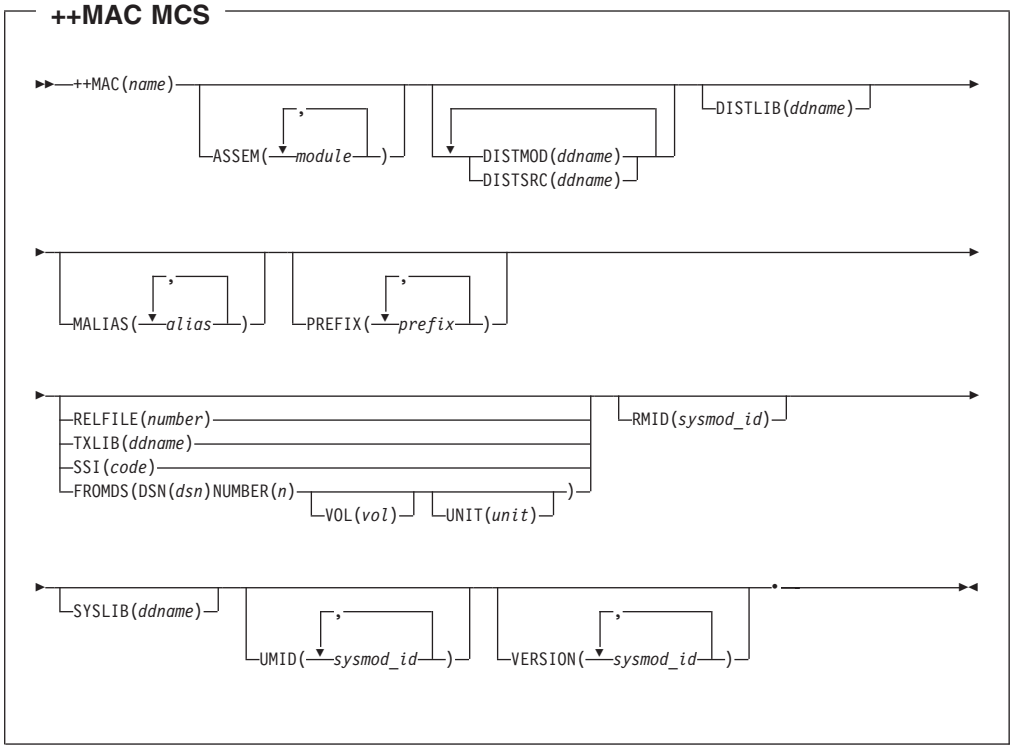

Deleting a Macro

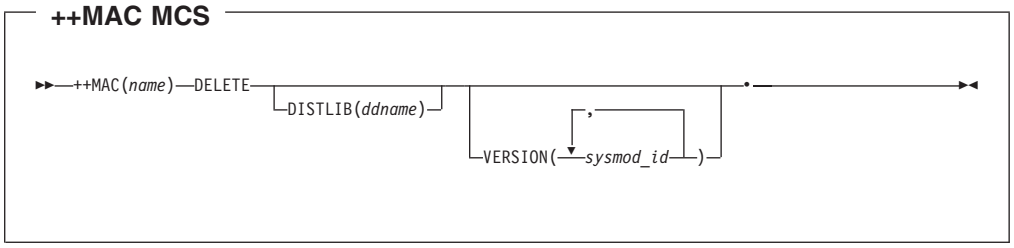

Operands

ASSEM
specifies the names of modules to be assembled in addition to those modules named as GENASM subentries in the MAC entry. The source for the assemblies is the ASSEM entry, SRC entry, or DISTSRC member whose name matches the specified ASSEM value. SMP/E looks for a match—first with an ASSEM entry, then with a SRC entry, and finally with an entry in the DISTSRC

data set—and uses the first match it finds. The source must either be known to SMP/E at the time the ASSEM operand is encountered on the ++MAC statement, or be included in the same SYSMOD.

Notes:

1. APPLY and ACCEPT processing place the specified names into the SYSMOD entry created on the target zone and distribution zone.
2. If the object deck for the element specified on the ASSEM operand is also provided by the SYSMOD, the assembly may not occur. (See the *SMP/E Commands* manual for more information.)

DELETE
specifies that the macro and alias names are to be removed from the target libraries, distribution libraries, and SMP/E data sets.

Notes:

1. DELETE is mutually exclusive with all other operands except DISTLIB and VERSION.
2. If the element statement is in a base function, you may want to use the DELETE operand on the ++VER MCS to delete the previous release, rather than on the element statement to delete a specific element.

DISTLIB
specifies the ddname of the distribution library for the specified macro.

Notes:

1. **DISTLIB** must be specified if the macro has not been previously recorded on the target zone or distribution zone. If a MAC entry already exists in the target zone or distribution zone and the value currently in that entry does not match that specified in the DISTLIB operand, the SYSMOD is not applied or accepted, unless that SYSMOD also used the ++MOVE MCS to change the DISTLIB to that new value.
2. You cannot use SYSPUNCH as the DISTLIB. It is used by SMP/E and other products to process assembled modules.

DISTMOD
specifies the ddname of the link-edit distribution library for those modules specified in the ASSEM operand. During ACCEPT processing, the object code from the assembler is link-edited to the library specified.

DISTSRC
specifies the ddname of the library containing the additional assembly or source to be assembled. The additional assembly or source must be specified in the ASSEM operand.

FROMDS
identifies the partitioned data set that contains this element.

Note: The FROMDS operand and its DSN, NUMBER, VOL, and UNIT suboperands are included in the MCS generated by the BUILDMCS command. IBM does not intend the FROMDS operand to be used in manually coded MCS.

DSN specifies the dsname of the FROMDS data set. The specified data set name must conform to standard data set naming conventions and cannot contain parentheses. The maximum length of the entire name is 44 characters (including the periods).

NUMBER
specifies a number that SMP/E is to use when assigning a name to the SMPTLIB data set associated with this FROMDS data set. (This is similar to the way the relative file number is used in RELFILE processing.)

VOL specifies, for an uncataloged data set, the volume serial number of the volume containing the FROMDS data set. If specified, this volume identifier must be from 1 to 6 alphanumeric characters.

VOL may be omitted for a cataloged data set.

UNIT specifies, for an uncataloged data set, the UNIT type containing the FROMDS data set. If specified, the UNIT value must be from 1 to 8 characters and must conform to standard UNIT naming conventions. SMP/E accepts any nonblank characters specified between the open and close parentheses, up to a maximum length of 8.

UNIT may be omitted for a cataloged data set.

Note: FROMDS is mutually exclusive with DELETE, RELFILE, SSI, and TXLIB.

MALIAS
specifies the alias names for the macro in both the target system and the distribution libraries.

Note: **MALIAS** must be specified on the ++MAC MCS even if **ALIAS** was specified on the COPY SELECT statement. **MALIAS** is required for the RECEIVE command to properly handle aliases in RELFILEs. During RECEIVE processing, SMP/E copies RELFILEs to SMPTLIB data sets. All element members and their associated aliases are copied. Because JCLIN is not processed during RECEIVE, the aliases must be identified on the MCS to get RECEIVE to copy the aliases.

You can use MALIAS when two or more macros that must be defined in the same zone must have the same name for programming access. For example, you can use MALIAS if several products have a help macro whose name must match the name of the command processing module it describes. You can specify **HELP** on MALIAS and a unique element name as the macro name.

name
specifies the name of the macro member in the distribution library and, optionally, in the target system library. The name can contain any alphanumeric characters and $, #, @, or hex C0.

PREFIX
specifies the first characters (prefix) of the names of modules to be assembled in addition to those modules named as GENASM subentries in the target zone MAC entry. The prefix values must contain no more than 7 characters.

The full module names are determined by comparing the prefix with the target zone or distribution zone MOD entry names.

The source for the assembly is the ASSEM entry, SRC entry, or DISTSRC member whose name matches a MOD entry name beginning with one of the specified prefixes. SMP/E looks for a match—first with an ASSEM entry, then with a SRC entry, finally with an entry in the DISTSRC data set—and uses the

first match it finds. The source must either be known to SMP/E at the time the PREFIX operand is encountered on the ++MAC statement, or be included in the same SYSMOD.

Note: If the object deck for an element selected by the PREFIX operand is also provided by the SYSMOD, the assembly may not occur. (See the *SMP/E Commands* manual for more information.)

RELFILE
identifies which relative file associated with the SYSMOD contains this element.This operand is required if you provide the element in RELFILE format, rather than inline or in a TXLIB data set.

Note: RELFILE is mutually exclusive with FROMDS and TXLIB.

RMID
specifies the last SYSMOD that **replaced** this macro. This operand may be used only in a service-updated function, and the specified PTF must be integrated into the function.

SSI
specifies eight hexadecimal digits of system status information. This information is placed in the directory of the target system library or SMPMTS or SMPSTS during APPLY processing, and in the distribution library during ACCEPT processing, as four packed hexadecimal bytes of user data. See the IEBUPDTE program description in *z/OS DFSMSdfp Utilities*, SC26-7414.

Note: This operand is ignored if text is located in a library, as is the case when either the FROMDS, RELFILE, or TXLIB operand is specified.

SYSLIB
specifies the ddname of the target library, if the macro exists in one. APPLY and RESTORE processing update this library.

Note: If a MAC entry already exists in the target zone or distribution zone and the value currently in that entry does not match that specified in the SYSLIB operand, SMP/E ignores the SYSLIB value in the SYSMOD being installed, unless that SYSMOD also used the ++MOVE MCS to change the SYSLIB to that new value.

TXLIB
is the ddname of the partitioned data set containing the macro.This operand is required if the macro is provided in a data set that the users have access to, rather than inline or in RELFILE format.

Notes:
1. SMPTLIB cannot be used as a value on the TXLIB operand.
2. TXLIB is mutually exclusive with FROMDS and RELFILE.

UMID
specifies the SYSMODs that have **updated** this macro since it was last replaced. This operand can be used only in a service-updated function, and the specified PTFs must be integrated into the function.

VERSION
specifies one or more function SYSMODs that currently contain the element. The function containing the ++MAC MCS will take over ownership of the element from the specified functions.

When **VERSION** is specified on an element statement, it overrides any VERSION operand values that might be specified on the ++VER MCS.

Usage Notes

- If the macro is packaged inline, it must immediately follow the ++MAC MCS and must not contain any records that start with ++. Neither **FROMDS**, nor **RELFILE**, nor **TXLIB** can be specified on the ++MAC MCS.
- If the macro is packaged in a TXLIB data set, the ddname specified in the TXLIB operand is required during APPLY and ACCEPT processing.
- For information about elements packaged in RELFILE format, see the *MVS Packaging Rules* manual.
- If the ++MAC MCS is for an inner macro (a macro referred to by another macro instruction that resides in the macro library), the modules that require reassembly must be specified in the ASSEM operand list.
- If the macro resides in a target library (rather than the SMPMTS), the target library should be included in the SYSLIB DD concatenation for assemblies during APPLY processing.For additional information on SYSLIB requirements, see *SMP/E User's Guide* and *SMP/E Commands*.

The following examples are provided to help you use the ++MAC MCS.

Examples

Example 1: Replacing a Macro through a USERMOD

Assume you want to replace a macro, named YOURMAC, that is part of a product you own, named YOURPROD. You have updated a copy of the macro in a text library, TSO.NEWSMP.MACLIB. Here is an example of a SYSMOD containing a ++MAC statement to build a USERMOD that installs the changes:

```
++USERMOD(USR0001)          /* User modification        */.
++VER(Z038) FMID(HUSR003)   /* for your product         */.
++MAC(YOURMAC)              /* to replace this macro.   */
            TXLIB(NEWSMP)   /* Macro is in this TXLIB.  */.
```

In this example, you have just applied another piece of service to the YOURPROD macro, but YOURPROD is still the owner of the macro. If you attempt to install some vendor-supplied service (that is, a PTF) to that macro, SMP/E issues an error message indicating that your user modification will be regressed, and will not install that service until the BYPASS(ID) operand is used.

Another method of installing the new macro is for you to assume ownership for the macro by using the VERSION operand. Assume you already have a user function, JXY1040, installed, and you want to transfer ownership of the SMP/E macro to your function. The following SYSMOD contains a ++MAC statement to do that:

```
++USERMOD(USR0001)          /* User modification        */.
++VER(Z038) FMID(JXY1040)   /* for user application     */.
++MAC(GIMOPCDE)             /* to replace this macro.   */
            VERSION(HMP1D00) /* Version SMP/E.          */
            TXLIB(NEWSMP)   /* Macro is in this TXLIB.  */.
```

If after the installation of this SYSMOD any subsequent IBM service modifies this macro, the replacement or update from the IBM service is not selected. It is your responsibility to provide continued modifications for the macro. Thus, this method of updating an element should be used carefully.

In both examples, because the new macro exists in a TXLIB, the following DD statement is required during APPLY and ACCEPT:

```
//NEWSMP   DD DSN=TSO.NEWSMP.MACLIB,DISP=SHR
```

Example 2: Deleting a Macro

Assume you have installed one of your application programs as function HUSR001. The function contains macro USRMAC01, which is no longer required. Here is an example of a SYSMOD containing a ++MAC statement to delete the macro from the target and distribution libraries:

```
++USERMOD(USR0001)          /* User modification        */.
++VER(Z038) FMID(HUSR001)   /* for user application.    */.
++MAC(USRMAC01)             /* Delete this macro.       */
            DELETE          /*                          */.
```

Example 3: Adding a New Macro

Assume you have installed one of your application programs as function HUSR001. A new macro USRMAC02 is required, and it has these requirements:

- The macro is to be put into SYS1.USRMACS in the target zone.
- The macro is to be put into SYS1.AUSRMACS in the distribution zone.
- The macro is to be installed with an alias of TERMINAL.
- After being installed, modules USRASM01, USRASM02, USRSRC01, and USRSRC02 are to be assembled. USRASM01 and USRASM02 already exist as assembler entries in the CSI, and USRSRC01 and USRSRC02 exist as source entries in the CSI.

Here is an example of a SYSMOD containing a ++MAC statement defining all this information:

```
++USERMOD(USR0002)          /* User modification        */.
++VER(Z038) FMID(HUSR001)   /* for user application.    */.
++MAC(USRMAC02)             /* Add this macro           */
            DISTLIB(AUSRMACS) /* to this DLIB           */
            SYSLIB(USRMACS) /* and to this tgt lib      */
            MALIAS(TERMINAL)/* with this alias.         */
            ASSEM(USRASM01, /* Assemble these modules.  */
                  USRASM02, /*                          */
                  USRSRC01, /*                          */
                  USRSRC02) /*                          */
                            /* Inline text follows.     */.
...
... macro USRMAC02 goes here
...
```

Example 4: Packaging a Renamed Macro

Suppose that, for some reason, you need to rename macro USRMAC02, which was introduced in “Example 3: Adding a New Macro” on page 55. The new name is to be USRMACXX. You do not need to change anything else about the macro. Here is an example of a SYSMOD containing the ++MAC statements needed to package this renamed macro:

```
++USERMOD(USR0003)          /* User modification        */.
++VER(Z038) FMID(HUSR001)   /* to user application.     */
               PRE(USR0002) /* Base on previous USERMOD.*/.
++MAC(USRMAC02)             /* Delete the original      */
            DELETE          /* macro.                   */.
++MAC(USRMACXX)             /* Add the renamed macro    */
            DISTLIB(AUSRMACS) /* to this DLIB           */
            SYSLIB(USRMACS) /* and to this tgt lib      */
            MALIAS(TERMINAL)/* with this alias.         */
            ASSEM(USRASM01, /* Assemble these modules.  */
                  USRASM02, /*                          */
                  USRSRC01, /*                          */
                  USRSRC02) /*                          */
                            /* Inline text follows.     */.
...
... macro USRMACXX goes here
...
```

++MACUPD MCS

The ++MACUPD MCS describes a single macro update within a PTF, an APAR fix, or a USERMOD. It must immediately precede the macro update statements within the SYSMOD.

Syntax

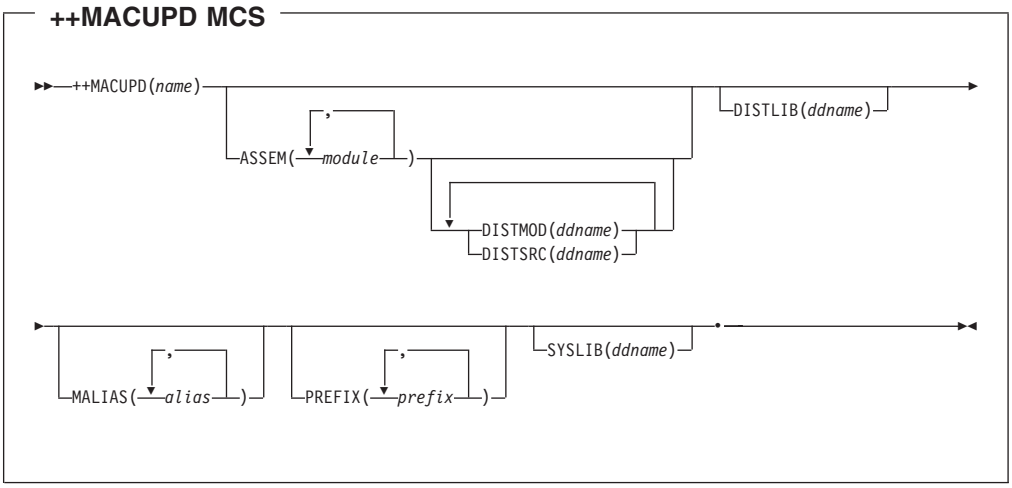

Operands

ASSEM

specifies the names of modules to be assembled in addition to those named as GENASM subentries in the MAC entry. The source for the assemblies is the ASSEM entry, SRC entry, or DISTSRC member whose name matches the specified ASSEM value. SMP/E looks for a match—first with an ASSEM entry, then with a SRC entry, and finally with an entry in the DISTSRC data set—and uses the first match it finds. The source must either be known to SMP/E at the time the ASSEM operand is encountered on the ++MACUPD statement, or be included in the same SYSMOD.

Notes:

1. APPLY and ACCEPT processing place the specified names into the SYSMOD entry created on the target zone and distribution zone.
2. If the object deck for the element specified on the ASSEM operand is also provided by the SYSMOD, the assembly may not occur. For more information, see the section on assemblies in the APPLY command chapter of the *SMP/E Commands* manual.

DISTLIB

specifies the ddname of the distribution library for the specified macro.

Notes:

1. **DISTLIB** must be specified if the macro has not been previously recorded on the target zone or distribution zone. If a MAC entry already exists in the target zone or distribution zone, and the value currently in that entry does not match that specified in the DISTLIB operand, the SYSMOD is not applied or accepted.
2. You cannot use SYSPUNCH as the DISTLIB. It is used by SMP/E and other products to process assembled modules.

DISTMOD
specifies the ddname of the link-edit distribution library for the modules specified in the ASSEM operand. During ACCEPT processing, the object code from the assembler is link-edited to the library specified.

DISTSRC
specifies the ddname of the library containing the additional assembly or source to be assembled. The additional assembly or source must be specified in the ASSEM operand.

MALIAS
specifies the alias names for the macro in both the target system and distribution libraries.

You can use MALIAS when two or more macros that must be defined in the same zone must have the same name for programming access. For example, you can use MALIAS if several products have a help macro whose name must match the name of the command processing module it describes. You can specify **HELP** on MALIAS and a unique element name as the macro name.

name
specifies the name of the macro member in the distribution library and, optionally, in the target system library. The name can contain any alphanumeric characters and $, #, @, or hex C0.

PREFIX
specifies the first characters (prefix) of the names of modules to be assembled in addition to those modules named as GENASM subentries in the target zone MAC entry. The prefix values must be 7 characters or less.

The full module names are determined by comparing the prefix with the target zone or distribution zone MOD entry names.

The source for the assembly is the ASSEM entry, SRC entry, or DISTSRC member whose name matches a MOD entry name beginning with one of the specified prefixes. SMP/E looks for a match—first with an ASSEM entry, then with a SRC entry, and finally with an entry in the DISTSRC data set—and uses the first match it finds. The source must be either known to SMP/E at the time the PREFIX operand is encountered on the ++MACUPD statement, or be included in the same SYSMOD.

Note: If the object deck for the element specified on the PREFIX operand is also provided by the SYSMOD, the assembly may not occur. For more information, see the section on assemblies in the APPLY command chapter of the *SMP/E Commands* manual.

SYSLIB
specifies the ddname of the target library, if the macro exists in one. APPLY and RESTORE processing update this library.

Usage Notes

- If a SYSMOD containing a ++MACUPD statement attempts to change the ownership (FMID) of the element (with the VERSION operand), the SYSMOD cannot be installed.
- The changes for the macro must immediately follow the ++MACUPD MCS and must not contain any records that start with ++.
- If the macro resides in a target library (rather than the SMPMTS), that target library should be included in the SYSLIB DD concatenation for assemblies during

APPLY processing. For additional information on SYSLIB requirements, see *SMP/E User's Guide* and *SMP/E Commands*.

- The only IEBUPDTE control statements allowed in a SYSMOD are ./ CHANGE and ./ ENDUP.
- The only IEBUPDTE CHANGE operand SMP/E checks is NAME, which must specify the same element as the ++MACUPD MCS. Other CHANGE operands may produce undesired results and are used at your own risk. For example, if you code **UPDATE=INPLACE**, SMP/E may update the distribution library. Once the distribution libraries are changed, there is no way to remove the updates.
- SMP/E does not support a continuation of the ./ CHANGE statement.
- SMP/E generates any ./ ALIAS statements needed and places them in the IEBUPDTE input data following the last text statement. The ./ ALIAS control statements are generated only for macro updates.
- When processing multiple updates to the same lines in a given macro, SMP/E uses the ./ CHANGE statement from the last update to the lines.
- If an APAR fix or USERMOD updates a macro that causes an assembly, SMP/E sets the ASSEMBLY indicator in the MOD entry for the assembled module. This can cause a problem when additional service that does not know about the macro change is installed at the same time as the APAR or USERMOD—for example, if you are installing your own USERMOD and IBM-supplied PTFs with the same APPLY command. In such cases, because the ASSEMBLY indicator is set, the module is reassembled, but does not contain the macro changes from the APAR or USERMOD. To prevent these assemblies, you can reset the ASSEMBLY indicator using UCLIN after installing the APAR or USERMOD.

Examples

Assume you want to update macro IFBMAC02, which resides in distribution library IFBMACS. Because of this change, module IFBSRC01 must be reassembled. Module IFBSRC01 exists as a source in distribution library SYS1.IFBSRC, and as an object module in distribution library SYS1.AOS23. The macro and the modules are part of JXY1040, a user-written function. Here is an example of a SYSMOD containing a ++MACUPD statement to make the necessary changes:

```
++PTF(USR0001)              /* Preventive service       */.
++VER(Z038) FMID(JXY1040)   /* for user product.        */.
++MACUPD(IFBMAC02)          /* Update this macro        */
            DISTLIB(IFBMACS)/* in this DLIB.            */
            ASSEM(IFBSRC01) /* Assemble this source.    */
            DISTSRC(IFBSRC) /* Source is here.          */
            DISTMOD(AOS23)  /* Assembled SRC goes here. */.
./ CHANGE name=IFBMAC02
... IEBUPDTE control cards and data
...
```

In this example, DD statements are required when the SYSMOD is applied to define the target libraries for the macro and the load module to be updated as a result of the assembly. For example, if the modules in SYS1.AOS23 (the assembled module's distribution library) were copied to SYS1.LINKLIB and the source in SYS1.IFBSRC (the source element's distribution library) were copied to SYS1.CHGLIB, the following DD statements are needed:

```
//LINKLIB  DD  DSN=SYS1.LINKLIB...
//CHGLIB   DD  DSN=SYS1.CHGLIB...
```

In this example, the following DD statements are needed when the SYSMOD is being accepted to define the distribution libraries:

```
//IFBMACS  DD  DSN=SYS1.IFBMACS...  (macro DLIB)
//IFBSRC   DD  DSN=SYS1.IFBSRC...   (source DLIB for assembly)
//AOS23    DD  DSN=SYS1.AOS23...    (DLIB for module assembled)
```

++MOD MCS

The ++MOD MCS describes a single module replacement. It must immediately precede the module definition statements when they are within the SYSMOD. You should use the ++MOD MCS when you want to provide the object form of a module. If you want to provide the source form and have it assembled when the SYSMOD is installed, use the ++SRC MCS instead.

Syntax

The syntax to be used depends on the processing to be done for the element:
- Adding or replacing the element
- Deleting the element

Adding or Replacing a Module

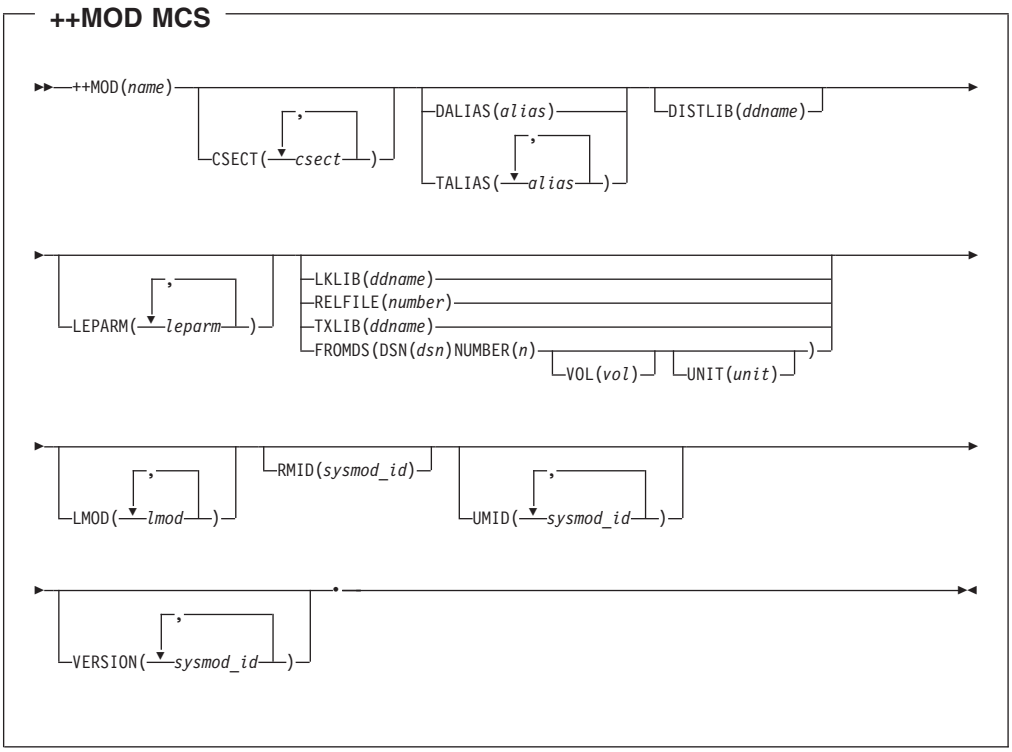

Deleting a Module

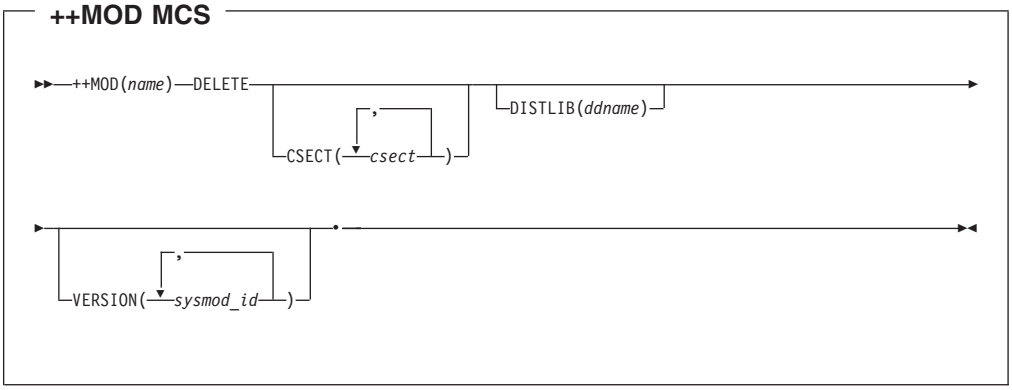

Operands

CSECT
lists all the CSECTs contained in the module. This operand is required if the module contains more than one CSECT or if the CSECT name is different from the module name on the ++MOD MCS.

- If no CSECT name is specified, SMP/E assumes that the module contains only one CSECT, whose name matches the module name on the ++MOD MCS.
- If **CSECT** is specified, it must include all the CSECTs contained in the module, even if one of them has the same name as the module.

Notes:

1. A CSECT name can contain from 1 to 8 characters. The name can contain any characters except the following:
   Comma ,
   Left parenthesis (
   Right parenthesis)
   Blank
2. Comments are not allowed within a CSECT name. For example, the following is not allowed:

   ```
   CSECT ( /* this is a csect name */ CSECT01)
   ```

   The comment is interpreted as part of the CSECT name, instead of a comment.
3. Even if **CSECT** is not specified on the ++MOD MCS used to create a MOD entry, CSECT information is saved if **CSECT** is specified on subsequent ++MOD statements that update the MOD entry.

DALIAS
is the alias name of a module that has an alias in the distribution library, but not in the target library. This might be used if the module is included under its alias name during system generation.

Note: DALIAS is mutually exclusive with TALIAS.

DELETE
indicates that the module and alias names are to be removed from the target libraries, distribution libraries, and SMP/E data sets.

In order to DELETE a module, the FMID on the SYSMOD must match the FMID of the module. If the module has no FMID associated with it, then the SYSMOD will delete the module. If the FMID of the module does not match the FMID on the SYSMOD, then the SYSMOD will not delete the module, because the specified FMID does not own the module.

Note: DELETE is mutually exclusive with all other operands except CSECT, DISTLIB, and VERSION.

DISTLIB
specifies the ddname of the distribution library for the specified module.

Notes:

1. This operand must be specified if the module has not been previously recorded on the target zone or distribution zone. If a MOD entry already exists in the target zone or distribution zone and the value currently in that entry does not match that specified in the DISTLIB operand, the SYSMOD

is not applied or accepted, unless that SYSMOD also used the ++MOVE MCS to change the DISTLIB to that new value.

2. You cannot use SYSPUNCH as the DISTLIB. It is used by SMP/E and other products to process assembled modules.

FROMDS
identifies the partitioned data set that contains this element.

Note: The FROMDS operand and its DSN, NUMBER, VOL, and UNIT suboperands are included in the MCS generated by the BUILDMCS command. IBM does not intend the FROMDS operand to be used in manually coded MCS.

DSN specifies the dsname of the FROMDS data set. The specified data set name must conform to standard data set naming conventions and cannot contain parentheses. The maximum length of the entire name is 44 characters (including the periods).

NUMBER
specifies a number that SMP/E is to use when assigning a name to the SMPTLIB data set associated with this FROMDS data set. (This is similar to the way the relative file number is used in RELFILE processing.)

VOL specifies, for an uncataloged data set, the volume serial number of the volume containing the FROMDS data set. If specified, this volume identifier must be from 1 to 6 alphanumeric characters.

VOL may be omitted for a cataloged data set.

UNIT specifies, for an uncataloged data set, the UNIT type containing the FROMDS data set. If specified, the UNIT value must be from 1 to 8 characters and must conform to standard UNIT naming conventions. IBM SMP/E for z/OS and OS/390, V3R1 accepts any nonblank characters specified between the open and close parentheses, up to a maximum length of 8.

UNIT may be omitted for a cataloged data set.

Note: FROMDS is mutually exclusive with DELETE, LKLIB, RELFILE, and TXLIB.

LEPARM
specifies link-edit utility attributes for the module. Any of the following values can be specified:

```
├─AC=1─ALIGN2──┬─┬─AMODE=24─┬─┬─COMPAT=LKED──┬─DC─FETCHOPT(─┬─PACK───┬─,─┬─PRIME───┬─)──►
               │ └─AMOD=24──┘ │ ├─COMPAT=PM1──┤             └─NOPACK─┘   └─NOPRIME─┘
               ├─┬─AMODE=31─┬─┤ ├─COMPAT=PM2──┤
               │ └─AMOD=31──┘ │ ├─COMPAT=PM3──┤
               ├─┬─AMODE=64─┬─┤ └─COMPAT=PM4──┘
               │ └─AMOD=64──┘ │
               ├─┬─AMODE=ANY─┬─┤
               │ └─AMOD=ANY──┘ │
               └─┬─AMODE=MIN─┬─┘
                 └─AMOD=MIN──┘

►─FILL(nn)─HOBSET─MAXBLK(nnnnn)─NE─┬─NOCALL─┬─OL─OVLY──────────────────────────────►
                                   └─NCAL───┘

►─┬─┬─REFR──────────┬─┬─RENT──────────┬─┬─REUS──────────────┬─┬─┬─RMODE=24─┬─┬─SCTR──────────►
  │ └─REUS(REFR)────┘ └─REUS(RENT)────┘ └─REUS(SERIAL)──────┘ │ ├─RMODE=ANY─┤ │
  └─REUS(NONE)──────────────────────────────────────────────┘ │ └─RMOD=ANY──┘ │
                                                              └─┬─RMODE=SPLIT─┬─┘
                                                                └─RMOD=SPLIT──┘

►─┬─UPCASE(YES)─┬─────────────────────────────────────────────────────────────┤
  └─UPCASE(NO)──┘
```

Notes:

1. The LEPARM values from the ++MOD MCS are associated with a load module entry only if the module was copied, not link-edited, into the target libraries. (The COPY indicator is set in the load module entry.) If the load module was link-edited, JCLIN must be used to change its link-edit utility attributes.
2. During APPLY processing of a ++MOD MCS with LEPARMs, the LEPARM options are saved not in the MOD entry created, but in the LMOD entry. During ACCEPT processing, the MOD entry is created with the LEPARMs present. The target zone MOD entry can contain the LEPARM options through either UCLIN or the copying of the distribution zone to a target zone.
3. The COMPAT, AMODE, and RMODE attributes must be specified in the format '*attribute*=*value*'. SMP/E does not support the '*attribute*(*value*)' format.
4. The previously listed link-edit attributes are the only attributes that can be specified on the LEPARM operand. If any other attributes are specified, a syntax error will result during RECEIVE processing.
5. The LEPARM values of DCBS, LET, LIST, XCAL, and XREF are recognized by SMP/E, but are not saved. Specifying them on the ++MOD MCS does not cause them to be passed to the link-edit utility.

For more information on how the LEPARM operand is processed, see the chapters on ACCEPT and APPLY processing in the *SMP/E Commands* manual. These attributes are described in full in "MOD Entry (Distribution and Target Zone)" on page 248.

LKLIB

is the ddname of the partitioned data set containing the link-edited format of the object module. This operand is required if the module is provided in a data set, rather than inline or on a tape.

Note: LKLIB is mutually exclusive with FROMDS, RELFILE, and TXLIB.

LMOD
lists existing load modules that are to contain the module. If any of the names specified are not already LMOD subentries in the target zone MOD entry, they are added during APPLY processing.

Notes:

1. LMOD can be used only to add a module to an existing load module.
2. LMOD cannot be used to create a new load module. Nor can it be used if any link-edit control statements must be added or changed to add the module to an existing load module. However, you can use JCLIN data to create a new load module and to add or change link-edit control statements.
3. If an LMOD entry does not exist for one of the load modules specified, sufficient information is not available to create one. Thus, when the MOD is to be link-edited during APPLY processing, an error message is issued, and no link-edit is performed for that load module.

name
specifies the name of the module in the distribution library and, optionally, in the target library. The name can contain any alphanumeric characters and $, #, @, or hex C0.

RELFILE
identifies which relative file associated with the SYSMOD contains this module.This operand is required if you provide the element in RELFILE format, rather than inline or in a LKLIB or TXLIB data set.

Notes:

1. RELFILE is mutually exclusive with FROMDS, LKLIB, and TXLIB.
2. If an object module is provided in RELFILE format, it must be in link-edited format.

RMID
specifies the last SYSMOD that **replaced** this module. This operand can be used only in a service-updated function, and the specified PTF must be integrated into the function.

TALIAS
specifies one or more alias names for the module. The aliases exist in the distribution library and the target library.

You can use TALIAS for a module that was copied from a distribution library into a target library (defined by JCLIN data as a copied module), but not for one that is link-edited (defined by JCLIN data as a link-edited module).

Note: **TALIAS** must be specified on the ++MOD MCS even if **ALIAS** was specified on the COPY SELECT statement. **TALIAS** is required for the RECEIVE command to properly handle aliases in RELFILEs. During RECEIVE processing, SMP/E copies RELFILEs to SMPTLIB data sets. All element members and their associated aliases are copied. Because JCLIN is not processed during RECEIVE, the aliases must be identified on the MCS to get RECEIVE to copy the aliases.

Likewise, to specify an alias for a copied load module, you must use the TALIAS operand on the ++MOD statement for that load module.(To specify an alias for a link-edited load module, do not use TALIAS. You must identify that alias using an ALIAS link-edit control statement in the JCLIN that defined the load module. For more information, see the *SMP/E Commands* manual.)

Note: TALIAS is mutually exclusive with DALIAS.

TXLIB
is the ddname of the partitioned data set containing an object module that has not been link-edited. This operand is required if the module is provided in a TXLIB data set rather than inline, in a FROMDS data set, in a LKLIB data set, or in RELFILE format.

Notes:
1. SMPTLIB cannot be used as a value on the TXLIB operand.
2. TXLIB is mutually exclusive with FROMDS, LKLIB, and RELFILE.

UMID
specifies the SYSMODs that have **updated** this module since it was last replaced. This operand can be used only in a service-updated function, and the specified PTFs must be integrated into the function.

VERSION
specifies one or more function SYSMODs that currently contain the element. The function containing the ++MOD MCS takes over ownership of the element from the specified functions.

When **VERSION** is specified on an element statement, it overrides any VERSION operand values specified on the ++VER MCS.

Usage Notes

- If the module is packaged inline, it must immediately follow the ++MOD MCS and must not contain any records that start with ++. Neither **FROMDS**, **LKLIB**, **RELFILE**, nor **TXLIB** may be specified.
- If the module is packaged in a TXLIB data set, the ddname specified on the TXLIB operand is required during APPLY and ACCEPT processing.
- If the module is in an LKLIB data set, the ddname specified in the LKLIB operand is required during APPLY and ACCEPT processing. Module replacements in an LKLIB data set must be in load module format (that is, processed by the link-edit utility).
- For information about packaging SYSMODs in RELFILE, TXLIB, or inline format, see the *MVS Packaging Rules* manual.
- There are several ways to associate a module with a load module:
  - The DISTLIB library can be totally copied into the target library.
  - JCLIN can identify the module as part of one or more load modules.
  - The LMOD operand on the ++MOD MCS can indicate the associated load module.

  If SMP/E cannot identify the load module associated with a given module, it does not update the target libraries during APPLY processing. Instead, it issues warning message GIM43401W.

Examples

The following examples are provided to help you use the ++MOD MCS:
- “Example 1: Adding a New Module to an Existing Load Module”
- “Example 2: Specifying Link-Edit Utility Attributes with LEPARM” on page 67
- “Example 3: Packaging a Renamed Module” on page 68

Example 1: Adding a New Module to an Existing Load Module

Module IFBMOD01 is a new module that is to be placed in the distribution library SYS1.AOSFB and is to be link-edited with the existing load module IEEFRQ in the

target system library SYS1.LINKLIB. Module IFBMOD01 contains two CSECTs, IFBCST01 and IFBCST02. Here is an example of a SYSMOD containing a ++MOD statement to do this:

```
++USERMOD(USR0001)          /* User modification        */.
++VER(Z038) FMID(JXY1040)   /* to user application.     */.
++MOD(IFBMOD01)             /* Add this module          */
            DISTLIB(AOSFB)  /* to this DLIB at ACCEPT,  */
            LMOD(IEEFRQ)    /* to this LMOD at apply.   */
            CSECT(IFBCST01  /* Module has two CSECTs.   */
                  IFBCST02) /*                          */.
...
... object deck for IFBMOD01
...
```

The following DD statement is needed at APPLY time to define the operating system load module library:

```
//LINKLIB  DD  DSN=SYS1.LINKLIB,DISP=OLD
```

When the SYSMOD is accepted, the following DD statement is needed to define the distribution library for this module:

```
//AOSFB  DD  DSN=SYS1.AOSFB,DISP=OLD
```

Example 2: Specifying Link-Edit Utility Attributes with LEPARM

For this example, assume you have installed a product, FXY1040, packaged in RELFILE format. The package contained a module, IFBMOD01, that was identified by inline JCLIN as being installed as follows:

1. It was copied from the distribution library, AOS12, to the target system library, LPALIB.
2. It was linked with several other modules to form a load module, IFBLMDXX, in LINKLIB.
3. It was linked, by itself, to form a load module, named IFBLMDX1, in LINKLIB.

The JCLIN in the initial function was as follows:

```
//JOB      JOB 'accounting info',MSGLEVEL=(1,1)
//COPY1    EXEC PGM=IEBCOPY
//AOS12    DD DSN=SYS1.AOS12,DISP=SHR
//LPALIB   DD DSN=SYS1.LPALIB,DISP=SHR
//SYSIN    DD *
 COPY INDD=AOS12,OUTDD=LPALIB
 SELECT M=(IFBMOD01)
/*
//LINK1    EXEC PGM=IEWL,PARM='REUS'
//AOS12    DD DSN=SYS1.AOS12,DISP=SHR
//SYSLMOD  DD DSN=SYS1.LINKLIB,DISP=SHR
//SYSLIN   DD *
  INCLUDE AOS12(IFBMOD01)
  INCLUDE AOS12(IFBMOD0A,IFBMOD0B,IFBMOD0C)
  ENTRY   IFBMOD01
  NAME IFBLMDXX(R)
/*
//LINK2    EXEC PGM=IEWL
//AOS12    DD DSN=SYS1.AOS12,DISP=SHR
//SYSLMOD  DD DSN=SYS1.LINKLIB,DISP=SHR
//SYSLIN   DD *
  INCLUDE AOS12(IFBMOD01)
  NAME IFBLMDX1(R)
/*
```

The target zone now contains the following entries:

1. MOD entry for IFBMOD01, having LMOD subentries of IFBMOD01 (from the copy step), IFBLMDXX (from the first link step), and IFBLMDX1 (from the second link step).
2. LMOD entry for IFBMOD01, (created from the SELECT statement of the copy step), indicating that the load module was copied during installation. The LMOD entry does not have any link-edit utility parameters yet, because SMP/E copied IFBMOD01 from the RELFILE data sets, and, thus, had no need to obtain the link parameters.
3. LMOD entry for IFBLMDXX (created from the first link step), with link-edit attributes of REUS.
4. LMOD entry for IFBLMDX1 (created from the second link step), with link-edit attributes of STD (because no special parameters were specified).

Now assume a PTF to replace module IFBMOD01 is required. Module IFBMOD01 has link-edit utility attributes of REUS and RENT. Here is an example of a SYSMOD containing a ++MOD statement to do this:

```
++PTF(UZ12345)              /* PTF                     */.
++VER(Z038) FMID(FXY1040)   /* for this function.      */.
++MOD(IFBMOD01)             /* Replace IFBMOD01        */
            DISTLIB(AOS12)  /* in this DLIB.           */
            LEPARM(RENT     /* Reentrant               */
                   REUS)    /* and reusable.           */.
...
... object deck for IFBMOD01
...
```

When the PTF is applied, SMP/E processes the LEPARM as follows:

1. Because LMOD IFBMOD01 was copied from the DLIB module, it is updated using the LEPARM values from the ++MOD MCS.
2. LMOD IFBLMDXX link-edit attributes remain as they are. This is because the link-edit utility attributes of each module within the load module have no bearing on the link-edit utility attributes of the load module; and, in this case, they are not the same. One of the other modules in IFBLMDXX must have a more restrictive set of link-edit attributes, thus forcing the load module to have that restrictive set of attributes.
3. LMOD IFBLMDX1 link-edit attributes remain as they are, for the same reason that load module IFBLMDXX attributes did not change. This is true even though load module IFBLMDX1 is composed of only the one DLIB module. As long as the load module was identified by a link-edit step, SMP/E assumes that the load module may contain multiple DLIB modules.

   Note: The only way to change the link-edit attributes of a load module that was link-edited during initial installation is to provide JCLIN input to identify the new link-edit attributes.

Example 3: Packaging a Renamed Module

Suppose that, for some reason, you need to rename module IFBMOD01, which was introduced in “Example 1: Adding a New Module to an Existing Load Module” on page 66. The new name is to be IFBMODXX. You do not need to change anything else about the module. Here is an example of a SYSMOD containing the ++MOD statements needed to package this renamed module:

```
++USERMOD(USR0002)          /* User modification       */.
++VER(Z038) FMID(JXY1040)   /* to user application.    */
               PRE(USR0001) /* Base on previous USERMOD.*/.
++MOD(IFBMOD01)             /* Delete the original     */
            DELETE          /* module.                 */.
++MOD(IFBMODXX)             /* Add the renamed module  */
```

```
            DISTLIB(AOSFB)  /* to this DLIB at ACCEPT,  */
            LMOD(IEEFRQ)    /* to this LMOD at apply.   */
            CSECT(IFBCST01  /* Module has two CSECTs.   */
                  IFBCST02) /*                          */.
...
... object deck for IFBMODXX
...
```

Note: When packaging a renamed module, you must ensure that this module is included in the appropriate load modules, either through JCLIN or the LMOD operand on the ++MOD statement, as in this example.

The following DD statement is needed at APPLY time to define the operating system load module library:

```
//LINKLIB  DD  DSN=SYS1.LINKLIB,DISP=OLD
```

When the SYSMOD is accepted, the following DD statement is needed to define the distribution library for this module:

```
//AOSFB  DD  DSN=SYS1.AOSFB,DISP=OLD
```

Example 4: Deleting a Module

If you need to delete a module, here is an example of a SYSMOD containing the ++MOD statement:

```
++USERMID(USR0004)          /* User modification        */.
++VER(Z038)  FMID(JXY1040)  /* to user application.     */.
++MOD(IFBMOD0Z)             /* Delete the module        */
     DELETE                 /* from DLIB AOSFB - entry  */
     DISTLIB(AOSFB)         /* for DLIB must be AOSFB.  */.
```

Note: When packaging a SYSMOD to delete a module, no object deck is required. The previous example is a complete SYSMOD, and does not require any other SMP/E elements in the SYSMOD.

For more information on the processing done when a module is deleted, see “Deleting Elements” in the *SMP/E Commands* manual.

++MOVE MCS

The ++MOVE MCS moves a macro, a module, a source, or a load module (and any known aliases) from one library to another. The associated target or distribution zone is automatically updated to show that the entry has been deleted from the old library and added to the new one.

Note: You cannot use ++MOVE to move a load module from one path to another path in the hierarchical file system if symbolic links have been defined for that load module.

Syntax

The syntax to be used depends on the type of library involved:
- Moving to a different distribution library (DISTLIB)
- Moving to a different target library (SYSLIB)

Moving to Another DISTLIB

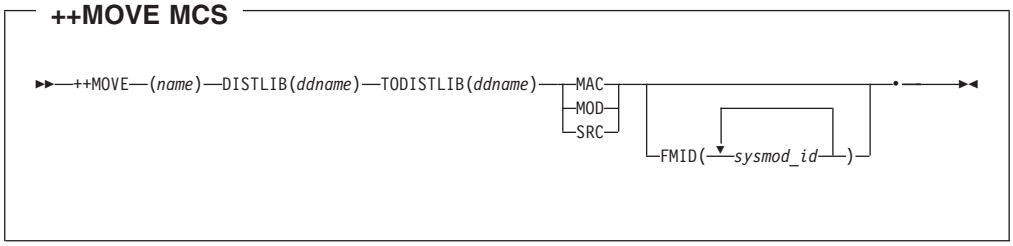

Moving to Another SYSLIB

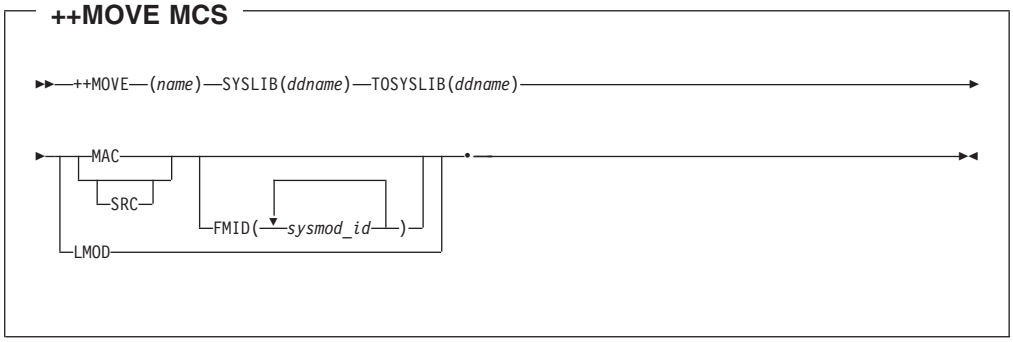

Operands

DISTLIB
specifies the ddname of the distribution library in which the member resides.

FMID
specifies the FMID that owns the element. This is used when the current owner of the element is different from the FMID specified on the ++VER MCS. Up to 10 SYSMOD IDs can be specified.

Note: FMID is mutually exclusive with LMOD.

MAC, MOD, SRC, or LMOD
specifies the type of member to be moved.
- If **DISTLIB** and **TODISTLIB** are specified, MAC, MOD, or SRC is valid.
- If **SYSLIB** and **TOSYSLIB** are specified, MAC, SRC, or LMOD is valid.

Note: LMOD is mutually exclusive with FMID.

name
specifies the name of the element or load module to be moved.

SYSLIB
specifies the ddname of the target library in which the member resides.

TODISTLIB
specifies the ddname of the distribution library to which the member is to be moved. This must be specified if **DISTLIB** is specified.

TOSYSLIB
specifies the ddname of the target library to which the member is to be moved. This must be specified if **SYSLIB** is specified.

Usage Notes

- The member and library operands are required. You must specify the member name, the set of libraries affected by the move, and the member type.
- ++MOVE statements must follow any ++VER and ++IF statements and must precede any element MCSs.
- Regardless of the order in which ++MOVE, ++RENAME, and ++DELETE statements are coded in a SYSMOD, they are processed in the following order:
  - **APPLY** and **ACCEPT**
    1. ++MOVE
    2. ++RENAME
    3. ++DELETE
  - **RESTORE**
    1. ++RENAME
    2. ++MOVE

  Afterwards, ++JCLIN statements are processed, and then element statements.
- You must use the FMID operand to identify all possible owners of an element to be moved.

  Using the FMID operand does not imply that the owner of the element is being changed. You can change ownership only by specifying the VERSION operand on the ++VER MCS or on the element statement. Even if you are changing the owner of the element, you must specify the FMID operand, because the element is moved before its ownership is changed. For more information about the VERSION operand, see “++VER MCS” on page 103.
- A ++MOVE MCS can move a member to a given library from one library at a time. If a member exists in more than one library, you must use additional ++MOVE or ++DELETE statements to process the additional copies. For more information about ++DELETE statements, see “++DELETE MCS” on page 17.
- If a ++MOVE MCS changes the DLIB for an element that is also being replaced, the element MCS must specify the new DLIB.

Examples

Assume IBM ships you a PTF that moves module MODAA from its current distribution library to a new library, and also moves load module LMODA from its current target library to a new one. Here is an example of a SYSMOD containing ++MOVE statements that makes these changes:

```
++PTF(UR01234)              /* Identify the PTF number  */.
++VER(Z038) FMID(HXY1300)   /* for MVS function HXY1300.*/.
++IF (ESY1300) THEN         /* If ESY1300 is installed  */
  REQ(UR12399)              /* UR12399 is required.     */.
```

++MOVE MCS

```
++MOVE (MODAA)              /* Move module MODAA        */
  DISTLIB(AOS11)            /* from DLIB AOS11          */
  TODISTLIB(AOSXX) MOD      /* to DLIB AOSXX.           */.
++MOVE (LMODA)              /* Move load module LMODA   */
  SYSLIB(LINKLIB)           /* from LINKLIB             */
  TOSYSLIB(LPALIB) LMOD     /* to LPALIB.               */.
            •
            •
            •
++MOD(MODAA) DISTLIB(AOSXX) /* Element MCS statements.  */.
```

++NULL MCS

The ++NULL MCS is valid only in the SMPHOLD data set. It provides no SMP/E function other than allowing all service tapes to be built with the same format, even though a function may have no exception SYSMOD data for a particular month.

Syntax

++NULL MCS

```
►►──++NULL──•──────────────────────────────────────────────────────────►◄
```

++PRODUCT MCS

The ++PRODUCT MCS is used to describe information about a product. It introduces descriptive information about a new or replacement product into the global zone.

Syntax

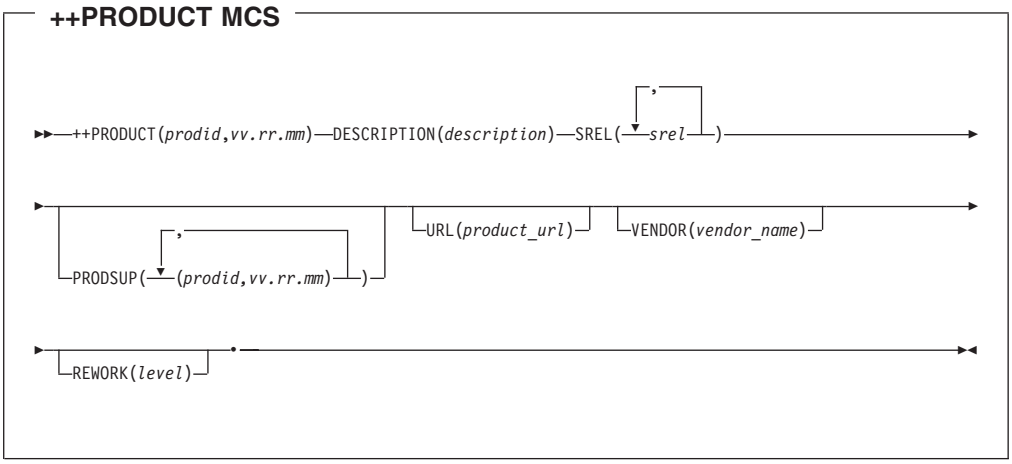

Operands

The PRODUCT is identified by the combination of the *prodid* and the *vv.rr.mm* values.

prodid
: is a 1- to 8-character product identifier. It can contain uppercase alphabetic, numeric, and national ($, #, @) characters. It may also contain one or more dashes (-). For IBM products, the *prodid* is assumed to be the IBM program product number (5647-A01, for example).

vv.rr.mm
: specifies the version, release, and modification level of this PRODUCT. It is 5 to 8 characters long in the form *vv.rr.mm*. The version (*vv*), release (*rr*), and modification (*mm*) values must be one or two numeric characters separated by a period ('.'). SMP/E will insert leading zeros to each section of the *vv.rr.mm* value that is one character long. That is, 2.5.0 will become 02.05.00 when stored.

DESCRIPTION
: a text description of the product.

- DESCRIPTION can also be specified as DESC.
- The DESCRIPTION value can be in single-byte characters (such as English alphanumeric) or double-byte characters (such as Kanji).
- The DESCRIPTION value can contain up to 64 bytes of data, including blanks. (For double-byte data, the 64-byte maximum includes all shift-in and shift-out characters, as well as the double-byte characters.) Extra blanks as well as leading and trailing blanks are deleted.
- The DESCRIPTION value can span multiple 80-byte records. Data must continue up to and including column 72 and begin in column 1 of the next line. All data past column 72 is ignored. The break does not translate to a blank unless a blank is explicitly coded in column 72 of the first line or in column 1 of the second line.

- The DESCRIPTION value cannot be only blanks.
- If parentheses are included in the text, they must be in matched pairs.

SREL
specifies the system or subsystem releases on which the PRODUCT can be installed. Each SREL value must be four alphanumeric characters, usually one alphabetic character followed by three numeric characters. These are the systems and subsystems defined by IBM, with their SRELs:

System	SREL
DB2	P115
CICS	C150
IMS	P115
MVS	Z038
NCP	P004

The list of SRELs is used during RECEIVE processing to determine whether a PRODUCT should be received.

PRODSUP
indicates which PRODUCTs are superseded (replaced) by this PRODUCT. It is a list of *prodid,vv.rr.mm* values for the PRODUCTs being superseded. The combination of *prodid* and *vv.rr.mm* determines the uniqueness of an entry in the PRODSUP operand list.

The PRODSUP operand must **not** specify a *prodid,vv.rr.mm* combination matching the *prodid,vv.rr.mm* combination of the ++PRODUCT statement on which it is specified.

URL
specifies a uniform resource locator (URL) that can be used to obtain additional information about this product.

- The URL can be in single-byte characters (such as English alphanumeric) or double-byte characters (such as Kanji).
- The URL can contain up to 256 bytes of data, excluding blanks. (For double-byte data, the 256-byte maximum includes all shift-in and shift-out characters, as well as the double-byte characters.) All blanks including leading and trailing blanks are deleted.
- The URL can span multiple 80-byte records. Data must continue up to and including column 72 and begin in column 1 of the next line. All data past column 72 is ignored, including blanks. The break does not translate to a blank.
- The URL cannot be only blanks.
- If parentheses are included in the text, they must be in matched pairs.

VENDOR
specifies the name of the vendor supplying the product.

- The VENDOR can be in single-byte characters (such as English alphanumeric) or double-byte characters (such as Kanji).
- The VENDOR can contain up to 64 bytes of data, including blanks. (For double-byte data, the 64-byte maximum includes all shift-in and shift-out characters, as well as the double-byte characters.) Extra blanks as well as leading and trailing blanks are deleted.
- The VENDOR can span multiple 80-byte records. Data must continue up to and including column 72 and begin in column 1 of the next line. All data past

column 72 is ignored. The break does not translate to a blank unless a blank is explicitly coded in column 72 of the first line or in column 1 of the second line.

- The VENDOR cannot be only blanks.
- If parentheses are included in the text, they must be in matched pairs.

REWORK
is the level of this ++PRODUCT MCS, which was reworked for minor changes. Up to eight numeric characters can be specified.

REWORK is generally used only for ++PRODUCT statements supplied by IBM that have been reworked for minor changes. For these ++PRODUCT statements, the REWORK level is *yyyyddd*, which is the year followed by the Julian date (for example, 2001110).

REWORK allows an updated ++PRODUCT MCS to be automatically received again, as long as it is more recent than the version that has already been received. This takes the place of rejecting the ++PRODUCT MCS and receiving it again.

Note: If a ++PRODUCT MCS appears more than once in the SMPPTFIN data set, the first occurrence may be received. However, none of the subsequent versions of the ++PRODUCT MCS are received, even if their rework level is higher than the one for the first version of the ++PRODUCT MCS.

Usage Notes

- The ++PRODUCT statements are processed whenever the SMPPTFIN data set is processed. This is true whether only selected SYSMODs are being processed or the entire SMPPTFIN data set is being processed.

  ++PRODUCT statements are not processed when only the SMPHOLD data set is being processed.
- The *prodid*, *vv.rr.mm*, DESCRIPTION, and SREL values are required and cannot be blank or null.
- The ++PRODUCT MCS is used in the SMPPTFIN data set and can be placed between, before, or after SYSMODs, ++FEATURE MCS, or ++PRODUCT MCS. It must be followed by one of the following: a ++APAR, ++ASSIGN MCS, ++FEATURE MCS, ++FUNCTION, ++PTF, ++USERMOD, another ++PRODUCT MCS, or an end-of-file. If one of these does not follow, SMP/E does not receive the SYSMOD being processed and it skips the ++PRODUCT MCS.

Example

Here is an example of a ++PRODUCT MCS for a product called OS/390.

```
++PRODUCT(5647-A01,2.5.0)       /* Product definition */
  DESCRIPTION(OS/390)                /* Description  */
  URL(http://www.S390.ibm.com/os390/) /* URL          */
  SREL(Z038)                         /* SREL value   */
  PRODSUP((5645-001,01.04.00))       /* Product sups */
  VENDOR(IBM)                      /* Product Vendor */.
```

++PROGRAM MCS

The ++PROGRAM MCS describes a program element (a pre-built load module or a program object). It must immediately precede the load module or program object when they are within the SYSMOD. Use the ++PROGRAM when you want to ship executables as program parts. If you want to provide the object form of the module, use the ++MOD MCS instead. JCLIN is not used to define the program element.

Syntax

The syntax to be used depends on the processing to be performed for the element:

- Adding or replacing the element
- Deleting the element

Adding or Replacing a Program Element

Program Element MCS

```
►►─++PROGRAM(name)──┬──────────────────────────────┬──┬──────────────────┬──────────────────────►
                    │   ┌──,──┐                    │  │ DISTLIB(ddname)  │
                    │   ▼     │                    │  └──────────────────┘
                    └─ALIAS(──alias──)─────────────┘

►─┬──────────────────────────────────────────────┬──┬──────────────────┬──────────────────────►
  ├─RELFILE(number)──────────────────────────────┤  │ RMID(sysmod_id)  │
  ├─LKLIB(ddname)────────────────────────────────┤  └──────────────────┘
  └─FROMDS(DSN(dsn)NUMBER(n)──┬──────────────┬──┬─)─┘
                              │ VOL(vol)     │  │
                              └──────────────┘  │
                              │ UNIT(unit)   │  │
                              └──────────────┘  │

►─┬──────────────────┬──┬──────────────────────────────┬──┬──────────────────────────────►◄
  │ SYSLIB(ddname)   │  │   ┌──,──┐                    │  │
  └──────────────────┘  │   ▼     │                    │  │
                        └─VERSION(──sysmod_id──)─────────┘  │
                                                            │
                                                            └──────────────────────────────
```

Deleting a Program Element

Program Element MCS

```
►►─++PROGRAM(name)──DELETE──┬──────────────────┬──┬──────────────────────────────┬──┬──────────►◄
                            │ DISTLIB(ddname)  │  │   ┌──,──┐                    │  │
                            └──────────────────┘  │   ▼     │                    │  │
                                                  └─VERSION(──sysmod_id──)─────────┘  │
                                                                                      │
                                                                                      └──────────
```

Operands

ALIAS
specifies an alternate name for the program object or load module.

DELETE
specifies that the program element and all aliases are to be removed from the target library and the distribution library.

Notes:

1. DELETE is mutually exclusive with all other operands except DISTLIB and VERSION.
2. If the element statement is in a base function, you may want to use the DELETE operand on the ++VER MCS to delete the previous release, rather than on the element statement to delete a specific element.
3. Specification of the DELETE operand results in all aliases of the program element being deleted along with the program element identified.

DISTLIB
specifies the ddname of the distribution library for the specified program element. During ACCEPT processing, SMP/E installs the program element into the distribution library as a member. (The distribution library must be a PDS or PDSE; it cannot be part of the hierarchical file system.)

Notes:

1. **DISTLIB** must be specified when the program element is first installed.
2. If a program element entry already exists in the target zone or distribution zone and the value currently in that entry does not match that specified in the DISTLIB operand, the SYSMOD is not applied or accepted.

FROMDS
identifies the partitioned data set that contains this element.

Note: The FROMDS operand and its DSN, NUMBER, VOL, and UNIT suboperands are included in the MCS generated by the BUILDMCS command. IBM does not intend the FROMDS operand to be used in manually coded MCS.

DSN
specifies the dsname of the FROMDS data set. The specified data set name must conform to standard data set naming conventions and cannot contain parentheses. The maximum length of the entire name is 44 characters (including the periods).

NUMBER
specifies a number that SMP/E is to use when assigning a name to the SMPTLIB data set associated with this FROMDS data set. (This is similar to the way the relative file number is used in RELFILE processing.)

VOL
specifies, for an uncataloged data set, the volume serial number of the volume containing the FROMDS data set. If specified, this volume identifier must be from 1 to 6 alphanumeric characters.

VOL may be omitted for a cataloged data set.

UNIT
specifies, for an uncataloged data set, the UNIT type containing the FROMDS data set. If specified, the UNIT value must be from 1 to 8 characters and must conform to standard UNIT naming conventions. SMP/E accepts any nonblank characters specified between the open and close parentheses, up to a maximum length of 8.

UNIT may be omitted for a cataloged data set.

Note: FROMDS is mutually exclusive with DELETE, RELFILE, and LKLIB.

LKLIB
is the ddname of the partitioned data set containing the program element. This

operand is required if the program element is provided in a data set to which the users have access, rather than inline or in RELFILE format.

Notes:

1. SMPTLIB cannot be used as a value on the LKLIB operand.
2. LKLIB is mutually exclusive with FROMDS and RELFILE.

name
specifies the name of the program element member. The name can contain any uppercase alphabetic, numeric, or national ($, #, @) character and can be 1 to 8 characters long.

RELFILE
identifies which relative file associated with the SYSMOD contains this element. This operand is required if you provide the element in RELFILE format, rather than inline or in a LKLIB data set.

Notes:

1. The RELFILE value must be a decimal number from 1 to 9999.
2. RELFILE is mutually exclusive with FROMDS and LKLIB.

RMID
specifies the last SYSMOD that **replaced** this program element. This operand can be used only in a service-updated function, and the specified PTF must be integrated into the function.

SYSLIB
specifies the ddname of the target library for the program element. (The target library must be a PDS or PDSE; it cannot be part of the hierarchical file system.)

During APPLY processing, the copy utility installs the program element into the target library. During RESTORE processing, the copy utility copies the program element from the distribution library member into the target library.

Note: SYSLIB must be specified when the program element is first installed.

VERSION
specifies one or more function SYSMODs that currently contain the element. The function containing the element MCS takes over ownership of the element from the specified functions.

When **VERSION** is specified on an element statement, it overrides any VERSION operand values that might be specified on the ++VER MCS.

Usage Notes

- The target and distribution libraries for a program element must be a PDS (for pre-built load module) or a PDSE (for a program object).
- If the program element is packaged inline, it must immediately follow the ++PROGRAM MCS and must not contain any records starting with ++. Neither **FROMDS**, nor **RELFILE**, nor **LKLIB** can be specified on the ++PROGRAM MCS.
- To be packaged inline, a program element must be unloaded along with its aliases into a sequential data set and then transformed into the required fixed-block-80 record format before it is packaged (see “Examples” on page 80 for a discussion of doing this). Later, when SMP/E installs the element, it is changed back to its original format. For more information about using GIMDTS, see “GIMDTS: Data Transformation Service Routine” on page 415.

- If the program element is packaged in a LKLIB data set, the ddname specified in the LKLIB operand is required during APPLY and ACCEPT processing.
- For information about packaging program objects or pre-built load modules, see the *MVS Packaging Rules* manual.

Examples

Suppose you have a partitioned data set whose members contain a pre-built load module (LMODABC) and two aliases (ALIAS1 and ALIAS2). Further, suppose that you want to package LMODABC and its aliases inline in a PTF. The steps to package and install pre-built load module LMODABC in a PTF are as follows:

Step 1: Unload the partitioned data set member LMODABC and its aliases to create a sequential, VS format, data set.

```
//JOBx     JOB ...
//STEP1    EXEC PGM=IEBCOPY,REGION=512K
//SYSPRINT DD  SYSOUT=*
//SYSUT3   DD  UNIT=SYSDA,SPACE=(TRK,(5,1))
//SYSUT4   DD  UNIT=SYSDA,SPACE=(TRK,(5,1))
//INPUT    DD  DSN=userid.TEST.LOAD,DISP=SHR
//OUTPUT   DD  DSN=userid.UNLOAD.DATA,DISP=(NEW,CATLG),
//             SPACE=(CYL,(20,10),RLSE),UNIT=SYSDA
//SYSIN    DD  *
  COPY    OUTDD=OUTPUT,INDD=INPUT
  SELECT  MEMBER=LMODABC
  SELECT  MEMBER=ALIAS1
  SELECT  MEMBER=ALIAS2
/*
```

Step 2: Transform the unloaded data set into fixed-block-80 type records by using the SMP/E provided service routine GIMDTS.

```
//JOBx     JOB ...
//TFORM    EXEC PGM=GIMDTS
//* -----  GIMDTS IS AN SMP/E LOAD MODULE.
//SYSPRINT  DD SYSOUT=*
//*
//* ----- INPUT TO BE TRANSFORMED - RECFM=VS
//*
//SYSUT1    DD DSN=userid.UNLOAD.DATA,DISP=SHR
//*
//* ----- OUTPUT - RECFM=FB
//*
//SYSUT2    DD DSN=userid.FB80.DATA,DISP=OLD
```

Step 3: Place the fixed block 80 records inline in the PTF following the ++PROGRAM MCS that identifies the element and its aliases to SMP/E.

```
++PTF(PTF0001).
++VER(Z038) FMID(DC00001).
++PROGRAM(LMODABC) ALIAS(ALIAS1,ALIAS2) DISTLIB(TGTLIB)
     SYSLIB(VEND001).

⋮
  Place the data transformed by GIMDTS here.

⋮
```

Step 4: APPLY the PTF to install LMODABC and its aliases into the appropriate target library.

```
SET BDY(TGT1).
APPLY PTF(PTF0001).
```

During the APPLY step, SMP/E retransforms the inline data back into a variable spanned (VS) sequential data set. SMP/E then invokes the copy utility to copy the retransformed data into the target library. The program element and aliases are copied using a COPYMOD and SELECT statements.

After the APPLY, the target library contains LMODABC and its aliases.

++PTF MCS

The ++PTF MCS identifies a service SYSMOD. This type of SYSMOD can replace or update elements in target and distribution libraries, such as for a permanent correction, or it can add new elements. All other MCSs for this SYSMOD follow this header MCS. For more information about packaging a PTF, see the *MVS Packaging Rules* manual.

Syntax

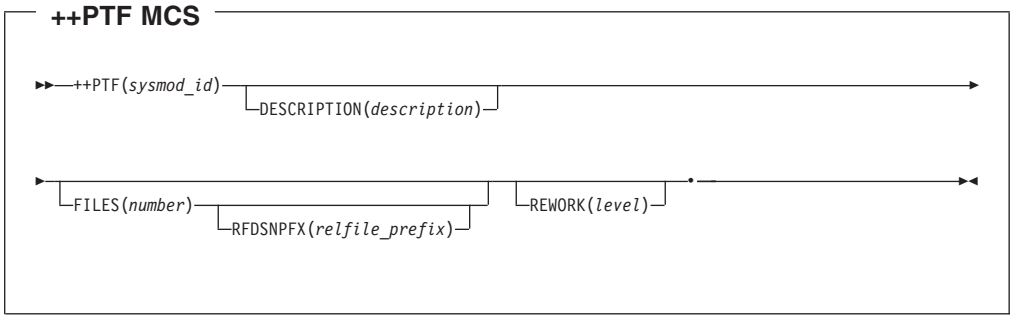

Operands

DESCRIPTION

specifies a descriptive name to be associated with this SYSMOD. *MVS Packaging Rules* manual.

- DESCRIPTION can also be specified DESC.
- The DESCRIPTION value can be in single-byte characters (such as English alphanumeric) or double-byte characters (such as Kanji).
- The DESCRIPTION value can contain up to 64 bytes of data, including blanks. (For double-byte data, the 64-byte maximum includes all shift-in and shift-out characters, as well as the double-byte characters.) Extra blanks, as well as leading and trailing blanks are deleted.
- The DESCRIPTION value can span multiple 80-byte records. Data must continue up to and including column 72 and begin in column 1 of the next line. All data past column 72 is ignored. The break does not translate to a blank unless a blank is explicitly coded in column 72 of the first line or in column 1 of the second line.
- If DESCRIPTION is specified, it must contain at least one non-blank character.
- If parentheses are included in the text, they must be in matched pairs.

FILES

specifies the number of relative files belonging to this PTF. It can be a decimal number from 1 to 9999. For information about packaging SYSMODs in relative files, see the *MVS Packaging Rules* manual.

Notes:

1. Although SMP/E allows you to package PTFs in relative files, they are not generally packaged in this format.
2. If a packager uses a high-level qualifier on RELFILE data sets, the RFDSNPFX operand on the header MCS (not the RFPREFIX operand on the RECEIVE command) **must** be used to identify that high-level qualifier.

REWORK
specifies the level of this SYSMOD, which has been reworked for minor changes. Up to eight numeric characters can be specified.

For SYSMODs supplied by IBM, the REWORK level is *yyyyddd*, where *yyyy* is the year the SYSMOD was reworked and *ddd* is the Julian date.

REWORK allows an updated SYSMOD to be automatically received again, as long as it is more recent than the version that has already been received. This takes the place of rejecting the SYSMOD and receiving it again.

Note: If a SYSMOD appears more than once in the SMPPTFIN data set, the first occurrence may be received. However, none of the subsequent versions of the SYSMOD are received, even if their rework level is higher than the one for the first version of the SYSMOD. (Message GIM40001E is issued for each of the subsequent versions of the SYSMOD.)

RFDSNPFX
identifies to SMP/E the prefix used in the relative file data set names for this SYSMOD. SMP/E uses this prefix when allocating data set names for the SYSMOD's relative files during RECEIVE processing.

- This operand can be specified only if the FILES operand is also specified.
- The RFDSNPFX value specified on the MCS statement must match the actual prefix used in the data set names for the associated relative files.

  For example, if the names of the relative files created for a SYSMOD start with "IBM", as in **IBM.***sysmod_id***.F1**, the header MCS statement for the SYSMOD must specify **RFDSNPFX(IBM)** so SMP/E knows which prefix to use when allocating the data set names for the SYSMOD's relative files during RECEIVE processing.
- Following standard data set naming conventions, the prefix can be from 1 to 8 alphanumeric or national ($, #, @) characters or a dash (–).

  To enable full Security Server protection for tape data sets and to keep the tape header within the 17-character limit (including periods), you should limit the prefix to 1 to 3 characters. If the name exceeds the 17-character limit, only the rightmost 17 characters are written to the tape header label.

sysmod_id
specifies a unique 7-character system modification identifier for the PTF. For more information, see "Naming Conventions for SYSMODs" on page 463.

Usage Notes

If you want to update IBM-supplied code, you should use the ++USERMOD MCS rather than the ++PTF MCS. For more information, see "++USERMOD MCS" on page 100.

Examples

A PTF is required that replaces module IFBMOD01 for function FXY1040. The prerequisite service SYSMOD for the module is PTF UZ00004. The APAR incident fixed by this PTF is AZ12345. Here is an example of a SYSMOD containing a ++PTF statement to accomplish this:

```
++PTF(UZ00006)              /* Identify the PTF number. */.
++VER(Z038) FMID(FXY1040)   /* for MVS function FXY1040 */
            PRE(UZ00004)    /* with a prerequisite.     */
            SUP(AZ12345)    /* Fixes one APAR.          */.
++MOD(IFBMOD01)             /* This module              */
```

```
            DISTLIB(AOSFB)  /* from this DLIB.          */.
...
... object deck for IFBMOD01
...
```

++RELEASE MCS

The ++RELEASE MCS removes a previously held SYSMOD from *exception SYSMOD* status. ++RELEASE statements are processed by the RECEIVE command.

Syntax

++RELEASE MCS

```
►►──++RELEASE(sysmod_id)──┬─ERROR──REASON(reason_id)──────────┬─FMID(fmid)──┬──────────────┬─.──────►◄
                          ├─USER──REASON(reason_id)──────────┤             └─DATE(yyddd)─┘
                          └─SYSTEM──REASON(─┤ Reason-ID ├─)──┘
```

SYSTEM Reason IDs Used by IBM:

```
├──┬─ACTION──┬──────────────────────────────────────────────────────────────────────────────┤
   ├─AO──────┤
   ├─DB2BIND─┤
   ├─DELETE──┤
   ├─DEP─────┤
   ├─DOC─────┤
   ├─EC──────┤
   ├─ENH─────┤
   ├─EXIT────┤
   ├─EXRF────┤
   ├─FULLGEN─┤
   ├─IOGEN───┤
   ├─IPL─────┤
   ├─MSGSKEL─┤
   └─RESTART─┘
```

Operands

ERROR, SYSTEM, or USER
specifies the hold category from which the SYSMOD is to be removed. You must specify one of these categories.

ERROR An APAR reported an error in the SYSMOD. The SYSMOD should not be processed until the APAR is resolved. A PTF held for this reason is also called a *program error PTF*, or PE-PTF. SMP/E automatically releases the SYSMOD when a SYSMOD that supersedes the APAR is processed. Error holds can be provided in a separate HOLD file or data set, such as SMPHOLD.

Note: **ERROR** can also be specified as **ERR**.

SYSTEM Special action outside normal SMP/E processing is required for the SYSMOD. Examples are SYSMODs requiring a SYSGEN after they are installed, or SYSMODs requiring the installation

of an associated engineering change (EC) level. System holds can appear in the SYSMOD itself or in a separate HOLD input file.

Note: SYSTEM can also be specified as **SYS**.

USER The SYSMOD requires special processing because of a decision you have made. User holds can be provided in a separate hold file or data set, such as SMPHOLD.

DATE
specifies the date that the ++HOLD MCS was generated.

FMID
specifies the FMID to which the held SYSMOD is applicable. For external HOLDDATA (a ++HOLD statement not within a SYSMOD), this information allows SMP/E to receive only those statements associated with FMIDs defined in the user's global zone. This operand is required.

REASON
identifies the HOLD reason ID that is to be removed from the SYSMOD. This field is required.

- An *error reason ID* is the number of the APAR that caused the SYSMOD to be placed in exception status.
- A *system reason ID* is a 1- to 7-character string used to identify some special processing the SYSMOD requires. These are the specific values currently used by IBM:

ID	Explanation
ACTION	The SYSMOD needs special handling before or during APPLY processing, ACCEPT processing, or both.
AO	The SYSMOD may require action to change automated operations procedures and associated data sets and user exits in products or in customer applications. The PTF cover letter describes any changes (such as to operator message text, operator command syntax, or expected actions for operator messages and commands) that can affect automation routines.
DB2BIND	A DB2 application REBIND is required for the SYSMOD to become effective.
DELETE	The SYSMOD contains a ++DELETE MCS, which deletes a load module from the system.
DEP	The SYSMOD has a software dependency.
DOC	The SYSMOD has a documentation change that should be read before the SYSMOD is installed.
EC	The SYSMOD needs a related engineering change.
ENH	The SYSMOD contains an enhancement, new option or function. The HOLD statement provides information to the user regarding the implementation and use of the enhancement.
EXIT	The SYSMOD contains changes that may affect a user exit.

For example, the interface for an exit may be changed, an exit may need to be reassembled, or a sample exit may be changed.

EXRF The SYSMOD must be installed in both the active and the alternative Extended Recovery Facility (XRF) systems at the same time to maintain system compatibility. (If you are not running XRF, you should bypass this reason ID.)

FULLGEN The SYSMOD needs a complete system or subsystem generation to take effect.

IOGEN The SYSMOD needs a system or subsystem I/O generation to take effect.

IPL The SYSMOD requires an IPL to become effective. For example, the SYSMOD may contain changes to LPA or NUCLEUS, the changes may require a CLPA, or a failure to perform an IPL might lead to catastrophic results, such as could be caused by activation of a partial fix.

Note: If you plan to perform an IPL with CLPA after the SYSMOD has been applied, then no further investigation of the HOLD is required; simply bypass the IPL reason ID. However, if you are not planning to perform an IPL with CLPA, then the details of the HOLD statement must be investigated to determine what kind of actions are required to activate the SYSMOD.

MSGSKEL This SYSMOD contains message changes that must be compiled for translated versions of the message changes to become operational on extended TSO consoles.

If you want to use translated versions of the messages, you must run the message compiler once for the library containing the English message outlines, and once for each additional language you want to be available on your system. For details, see *z/OS MVS Planning: Operations*.

If you want to use **only** the English version of the messages, you do not need to run the message compiler. You should bypass this reason ID.

RESTART To become effective, the SYSMOD requires a special subsystem restart operation. The HOLD statement contains information regarding the required restart actions.

- A *user reason ID* is defined by the user.

For additional information, see “Naming Conventions for HOLD Reason IDs and HOLD Classes” on page 460.

sysmod_id
specifies that SMP/E is to remove the identified SYSMOD from *exception SYSMOD* status. This operand is required.

Usage Notes

- ++RELEASE statements are not allowed within a SYSMOD. They are allowed only in SMPHOLD.

- ++RELEASE statements **unconditionally** remove a SYSMOD from exception status and should, therefore, be used with caution. To install a SYSMOD that is currently in exception status, you should probably not create and process a ++RELEASE statement, but rather use the appropriate BYPASS operand of the APPLY or ACCEPT command.
- ++RELEASE statements do not affect ++HOLD statements within a SYSMOD (internal HOLDDATA). However, SMP/E can ignore this internal HOLDDATA during APPLY or ACCEPT processing if **BYPASS(HOLDSYS)** or **BYPASS(HOLDUSER)** is specified.

Examples

The following examples are provided to help you use the ++RELEASE MCS:
- "Example 1: Removing a SYSMOD from HOLDUSER Status"
- "Example 2: Incorrect Use of ++RELEASE"

Example 1: Removing a SYSMOD from HOLDUSER Status

Here is an example of a ++HOLD statement that holds the PTF until after some event (such as new hardware) occurs:

```
++HOLD    (UZ12345)         /* Put this PTF             */
          FMID(FXY1040)     /* for this function        */
          USER              /* into hold user status    */
          REASON(CPU0A)     /* for CPU 0A update.       */
          COMMENT(I DO NOT WANT THIS TO GO ON
                  UNTIL AFTER THE CPU CHANGE)  /*       */.
```

When the CPU change is made, the following sample ++RELEASE statement allows the PTF to be installed:

```
++RELEASE (UZ12345)         /* Remove this PTF          */
          FMID(FXY1040)     /* for this function        */
          USER              /* from hold user status    */
          REASON(CPU0A)     /* for CPU 0A update.       */.
```

That PTF is now eligible for normal installation.

Example 2: Incorrect Use of ++RELEASE

Assume the following ++HOLD MCS was processed as part of the normal preventive service installation:

```
++HOLD    (UZ12345)         /* Put this PTF             */
          FMID(FXY1040)     /* for this function        */
          ERROR             /* into hold error status   */
          REASON(AZ12345)   /* for the APAR.            */
          COMMENT(WHEN RUNNING PRODUCT XYZ and OC4
                  ABEND MAY OCCUR)  /*                  */.
```

You are running one system with product XYZ installed and one without product XYZ. The PTF provides a fix for another problem you are encountering on the system without product XYZ; so you want to install this PTF on that system. Here is an example of a ++RELEASE statement that lets you apply PTF UZ12345 without having to use the BYPASS operand:

```
++RELEASE (UZ12345)         /* Remove this PTF          */
          FMID(FXY1040)     /* for this function        */
          ERROR             /* from hold error status   */
          REASON(AZ12345)   /* for the APAR.            */.
```

The risk with this method of processing is that SMP/E no longer has any record of PTF UZ12345 being in exception status. Therefore, the next time any modifications are installed on the system with product XYZ installed, the PTF is installed, introducing a potential 0C4 problem into that system.

The correct way to install the PTF on the system without product XYZ is to use the following command:

```
SET      BDY(MVSTST1)       /* Process MVSTST1 tgt zone.*/.
APPLY    S(UZ12345)         /* Process the PTF.         */
         BYPASS(HOLDERR(AZ12345)) /* Bypass known error.*/.
```

Now the PTF is installed on one system, but SMP/E still remembers that it is in hold error status and does not allow it to be installed on any other system.

Note: Any other applicable operand (FORFMID, SOURCEID, and so on) can be used in place of the SELECT or S operand.

++RENAME MCS

During APPLY processing, the ++RENAME MCS renames a load module in all the target libraries and the LMOD entry in the target zone. It also updates the LMOD subentry of the MOD entry for each module in the load module. For load modules having a CALLLIBS subentry (or having a SYSLIB allocation), SMP/E also renames the base version of the load module in the SMPLTS library. For load modules having a side deck library subentry, SMP/E also renames the definition side deck in the side deck library.

During ACCEPT processing, if inline JCLIN was processed, the distribution zone entries are updated to reflect the ++RENAME changes. The target libraries and target zone entries are not updated.

Notes:

1. You cannot use ++RENAME to rename a load module for which symbolic links have been defined.
2. You cannot use ++RENAME to rename macros, modules, source, or other elements. SMP/E does, however, support these ways to rename an element:
   - **For elements other than modules,** you must use an element MCS statement to delete the original element, and another element MCS statement to reintroduce it using the new name. You can do both of these steps in the same SYSMOD. For examples, see the descriptions of the various element MCS statements in this chapter.
   - **For modules,** you must use a ++MOD statement to delete the original module, and another ++MOD statement to reintroduce it using the new name. In addition, you must ensure that the renamed module is included in the appropriate load modules, either through JCLIN or the LMOD operand on the ++MOD statement. You can do all of these steps in the same SYSMOD. For an example, see “Example 3: Packaging a Renamed Module” on page 68 in this chapter.

Syntax

++RENAME MCS

```
►►──++RENAME──(old_name)──TONAME(new_name)──•──────────────────────────────────►◄
```

Operands

old_name
specifies the name of the load module to be renamed.

TONAME
specifies the new name for the load module.

Usage Notes

- There are no optional operands. You must specify the load module name and its new name.
- ++RENAME statements must follow any ++VER and ++IF statements, and must precede any element MCSs.

- Regardless of the order in which ++MOVE, ++RENAME, and ++DELETE statements are coded in a SYSMOD, they are processed in the following order:
  - **APPLY** and **ACCEPT**
    1. ++MOVE
    2. ++RENAME
    3. ++DELETE
  - **RESTORE**
    1. ++RENAME
    2. ++MOVE

  ++JCLIN statements are processed next, followed by element statements.

Examples

Here is an example of a SYSMOD containing a ++RENAME statement renaming load module LMODA:

```
++PTF(UR01234)              /* Identify the PTF number. */.
++VER(Z038) FMID(HXY1300)   /* For MVS function HXY1300.*/.
++IF (ESY1300) THEN         /* If ESY1300 is installed  */
  REQ(UR12399)              /* UR12399 is required.     */.
++RENAME (LMODA)            /* Rename load module LMODA */
  TONAME(LMODBB)            /* to LMODBB.               */.
++JCLIN                     /* JCLIN follows.           */.
            •
            •
            •
++MOD(MODAA) DISTLIB(AOSXX) /* Element MCS statements.  */.
```

++SRC MCS

The ++SRC MCS describes a single source replacement. It must immediately precede the source definition statements when they are within the SYSMOD.

You should use the ++SRC MCS when you want to provide the source form of a module and have it get assembled when the SYSMOD is installed. If you want to provide the object form of the module, use the ++MOD MCS instead.

Syntax

The syntax to be used depends on the processing to be done for the element:
- Adding or replacing the element
- Deleting the element

Adding or Replacing Source

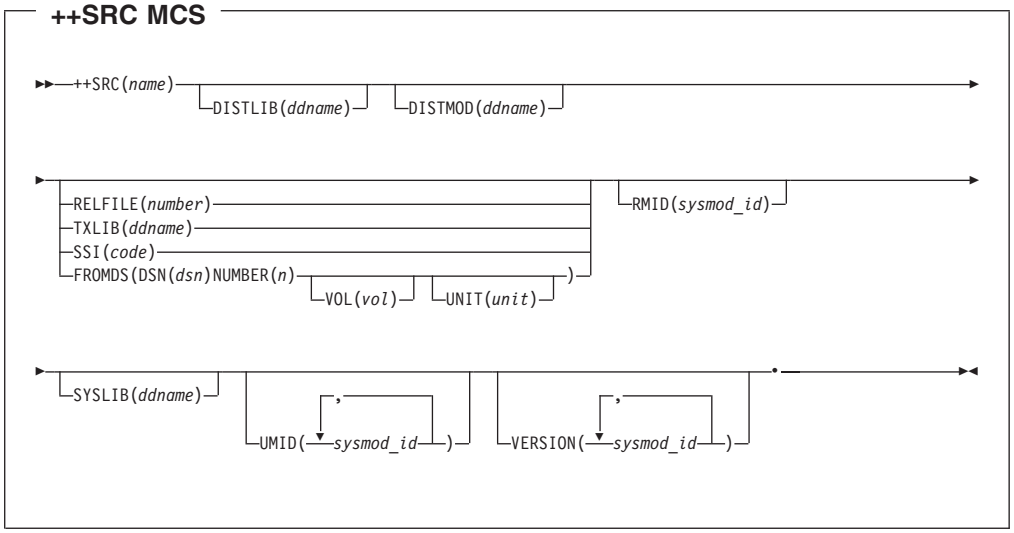

Deleting Source

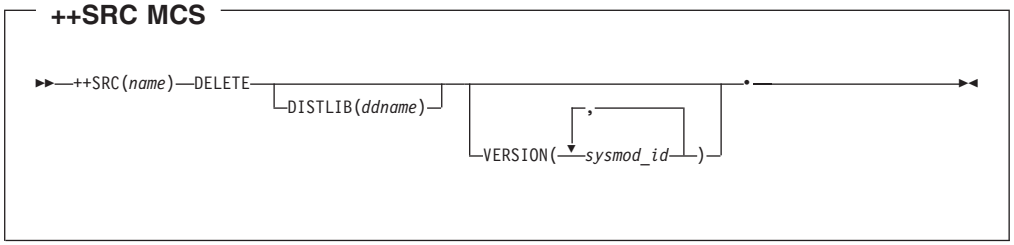

Operands

DELETE
indicates that the source is to be removed from the target libraries, distribution libraries, and SMP/E data sets.

Note: DELETE is mutually exclusive with all other operands except DISTLIB and VERSION.

DISTLIB
specifies the ddname of the distribution library for the specified source.

Note: **DISTLIB** must be specified if the source has not been previously recorded on the target zone or distribution zone. If a SRC entry already exists in the target zone or distribution zone, and the value currently in that entry does not match that specified in the DISTLIB operand, the SYSMOD is not applied or accepted, unless that SYSMOD also used the ++MOVE MCS to change the DISTLIB to that new value.

DISTMOD
specifies the ddname of the link-edit distribution library for the assembled source code. During ACCEPT processing, the object code from the assembler is link-edited to the library specified.

FROMDS
identifies the partitioned data set that contains this element.

Note: The FROMDS operand and its DSN, NUMBER, VOL, and UNIT suboperands are included in the MCS generated by the BUILDMCS command. IBM does not intend the FROMDS operand to be used in manually coded MCS.

DSN
specifies the dsname of the FROMDS data set. The specified data set name must conform to standard data set naming conventions and cannot contain parentheses. The maximum length of the entire name is 44 characters (including the periods).

NUMBER
specifies a number that SMP/E is to use when assigning a name to the SMPTLIB data set associated with this FROMDS data set. (This is similar to the way the relative file number is used in RELFILE processing.)

VOL
specifies, for an uncataloged data set, the volume serial number of the volume containing the FROMDS data set. If specified, this volume identifier must be from 1 to 6 alphanumeric characters.

VOL may be omitted for a cataloged data set.

UNIT
specifies, for an uncataloged data set, the UNIT type containing the FROMDS data set. If specified, the UNIT value must be from 1 to 8 characters and must conform to standard UNIT naming conventions. IBM SMP/E for z/OS and OS/390, V3R1 accepts any nonblank characters specified between the open and close parentheses, up to a maximum length of 8.

UNIT may be omitted for a cataloged data set.

Note: FROMDS is mutually exclusive with DELETE, RELFILE, SSI, and TXLIB.

name
specifies the name of the source in the distribution library and, optionally, in the target library. The name can contain any alphanumeric characters and $, #, @, or hex C0.

RELFILE
identifies which relative file associated with the SYSMOD contains this element. This operand is required if you provide the element in RELFILE format, rather than inline or in a TXLIB data set.

Notes:

1. SMPTLIB cannot be used as a value on the TXLIB operand.
2. RELFILE is mutually exclusive with FROMDS and TXLIB.

RMID
specifies the last SYSMOD that **replaced** this source. This operand can be used only in a service-updated function, and the specified PTF must be integrated into the function.

SSI
specifies eight hexadecimal digits of system status information. This information is placed in the directory of the target system library or SMPMTS or SMPSTS during APPLY processing, and in the distribution library during ACCEPT processing, as four packed hexadecimal bytes of user data. See the IEBUPDTE program description in *z/OS DFSMSdfp Utilities*, SC26-7414.

Note: This operand is ignored if text is located in a library, as is the case when either the FROMDS, RELFILE, or TXLIB operand is specified.

SYSLIB
specifies the ddname of the target library, if the source module exists in one. APPLY and RESTORE processing update this library.

Note: If a SRC entry already exists in the target zone or distribution zone and the value currently in that entry does not match that specified in the SYSLIB operand, SMP/E ignores the SYSLIB value in the SYSMOD being installed, unless that SYSMOD also used the ++MOVE MCS to change the SYSLIB to that new value.

TXLIB
is the ddname of the partitioned data set containing the source. This operand is required if the module is provided in a data set the users have access to, rather than inline or in RELFILE format.

Notes:

1. SMPTLIB cannot be used as a value on the TXLIB operand.
2. TXLIB is mutually exclusive with FROMDS and RELFILE.

UMID
specifies the UMIDs of the source. This operand can be used only in function SYSMODs and specifies the PTF service level of the source (the set of SYSMODs that have updated this source since it was last replaced).

VERSION
specifies one or more function SYSMODs that currently contain the element. The function containing the ++SRC MCS takes over ownership of the element from the specified functions.

When **VERSION** is specified on an element statement, it overrides any VERSION operand values that might be specified on the ++VER MCS.

Usage Notes

- If the source is packaged inline, it must immediately follow the ++SRC MCS and must not contain any records starting with ++. Neither **FROMDS**, nor **RELFILE**, nor **TXLIB** can be specified.
- If the source is in a TXLIB data set, the ddname specified on the TXLIB operand is required during APPLY and ACCEPT processing.

- For information about packaging SYSMODs in RELFILE, TXLIB, or inline format, see the *MVS Packaging Rules* manual.

Examples

The following examples are provided to help you use the ++SRC MCS:
- "Example 1: Adding a New Source to the System"
- "Example 2: Packaging Renamed Source"

Example 1: Adding a New Source to the System

A replacement for the source IFBSRC01 is in a partitioned data set referred to by the ddname REPLACE. The distribution library for the source is SYS1.IFBSRC; SYS1.AOS23 is the distribution library for the module, IFBSRC01, resulting from the assembly of the source, IFBSRC01.

Here is an example of a SYSMOD containing a ++SRC statement that causes SMP/E to install the source code, assemble it, and save the resulting module in the DLIBs:

```
++USERMOD(USR0001)          /* User modification        */.
++VER(Z038) FMID(FXY1040)   /* for user function in MVS.*/.
++SRC(IFBSRC01)             /* Replace source           */
            DISTLIB(IFBSRC) /* in this DLIB.            */
            DISTMOD(AOS23)  /* MOD goes in this DLIB.   */
            TXLIB(REPLACE)  /* Replacement SRC is here. */.
```

The following DD statements are required when the SYSMOD is applied:

```
//REPLACE  DD DSN=...
//SMPSTS   DD DSN=SYS1.SMPSTS,DISP=OLD
```

plus whatever other DD statements are required based on which load modules the assembled source is to be linked to. These load modules should be identified by JCLIN, either as a separate step or within the SYSMOD itself. Assuming the load module was composed of only this one module, the following ++JCLIN MCS can be added to the SYSMOD after the ++VER statement.

```
++JCLIN.                    /* JCLIN to get SRC linked. */
//JOB1     JOB 'accounting info',MSGLEVEL=(1,1)
//STEP1    EXEC PGM=IEBCOPY
//AOS23    DD DSN=SYS1.AOS23,DISP=SHR
//LPALIB   DD DSN=SYS1.LPALIB,DISP=SHR
//SYSIN    DD *
 COPY INDD=AOS23,OUTDD=LPALIB
 SELECT M=(IFBSRC01)
/*
```

In this case, you also need the following DD statement when the SYSMOD is applied:

```
//LPALIB   DD DSN=SYS1.LPALIB,DISP=OLD
```

The following DD statements are required when the SYSMOD is accepted:

```
//REPLACE  DD DSN=...
//IFBSRC   DD DSN=SYS1.IFBSRC,DISP=OLD
//AOS23    DD DSN=SYS1.ASO23,DISP=OLD
```

Example 2: Packaging Renamed Source

Suppose that, for some reason, you need to rename source IFBSRC01, which was introduced in "Example 1: Adding a New Source to the System". The new name is to be USRSRCXX. You do not need to change anything else about the source. Because the original source was linked by JCLIN, you must provide updated JCLIN

to link the renamed version of the source. Here is an example of a SYSMOD containing the ++SRC statements and JCLIN needed to package this renamed source:

```
++USERMOD(USR0002)          /* User modification        */.
++VER(Z038) FMID(FXY1040)   /* for user function in MVS.*/
               PRE(USR0001) /* Base on previous USERMOD.*/.
++SRC(IFBSRC01)             /* Delete the original      */
            DELETE          /* source.                  */.
++SRC(USRSRCXX)             /* Add renamed source       */
            DISTLIB(IFBSRC) /* to this DLIB.            */
            DISTMOD(AOS23)  /* MOD goes in this DLIB.   */
            TXLIB(REPLACE)  /* Replacement SRC is here. */.
...
++JCLIN.                    /* JCLIN to get SRC linked. */
//JOB1     JOB 'accounting info',MSGLEVEL=(1,1)
//STEP1    EXEC PGM=IEBCOPY
//AOS23    DD DSN=SYS1.AOS23,DISP=SHR
//LPALIB   DD DSN=SYS1.LPALIB,DISP=SHR
//SYSIN    DD *
 COPY INDD=AOS23,OUTDD=LPALIB

SELECT M=(USRSRCXX)
/*
```

You must ensure that the renamed source is in the TXLIB library (REPLACE) used to provide SMP/E with the element.

The following DD statements are required when the SYSMOD is applied:

```
//REPLACE  DD DSN=...
//SMPSTS   DD DSN=SYS1.SMPSTS,DISP=OLD
//LPALIB   DD DSN=SYS1.LPALIB,DISP=OLD
```

The following DD statements are required when the SYSMOD is accepted:

```
//REPLACE  DD DSN=...
//IFBSRC   DD DSN=SYS1.IFBSRC,DISP=OLD
//AOS23    DD DSN=SYS1.AOS23,DISP=OLD
```

++SRCUPD MCS

The ++SRCUPD MCS describes a single set of source update statements within a PTF, an APAR fix, or a USERMOD. It must immediately precede the source update statements within the SYSMOD.

Syntax

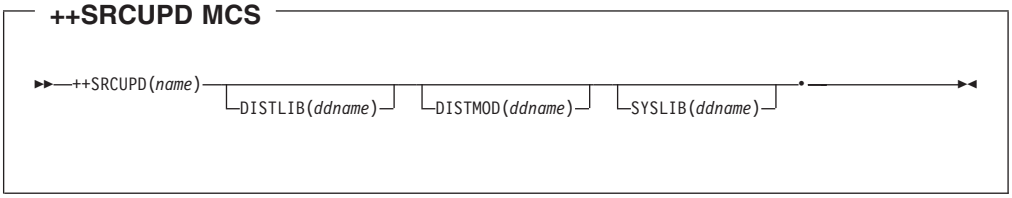

Operands

name
specifies the name of the source in the distribution library and, optionally, in the target library. The name can contain any alphanumeric characters and $, #, @, or hex C0.

DISTLIB
specifies the ddname of the distribution library for the specified source.

Note: **DISTLIB** must be specified if the source has not been previously recorded on the target zone or distribution zone. If a SRC entry already exists in the target zone or distribution zone, and the value currently in that entry does not match that specified in the DISTLIB operand, the SYSMOD is not applied or accepted.

DISTMOD
specifies the ddname of the link-edit distribution library for the assembled source code. During ACCEPT processing, the object code from the assembler is link-edited to the library specified.

SYSLIB
specifies the ddname of the target library, if the source exists in one. APPLY and RESTORE processing update this library.

Usage Notes

- If a SYSMOD containing a ++SRCUPD statement attempts to change the ownership (FMID) of the element (with the VERSION operand), the SYSMOD cannot be installed.
- The changes for the source must immediately follow the ++SRCUPD MCS and must not contain any records starting with ++.
- The only IEBUPDTE control statements allowed in a SYSMOD are ./ CHANGE and ./ ENDUP.
- The only IEBUPDTE CHANGE operand that SMP/E checks is NAME, which must specify the same element as the ++SRCUPD MCS. Other CHANGE operands may produce undesired results and are used at your own risk. For example, if you code **UPDATE=INPLACE**, SMP/E may update the distribution library. Once the distribution libraries are changed, there is no way to remove the updates.

- When processing multiple updates to the same lines in a given source module, SMP/E uses the ./ CHANGE statement from the last update to the lines.
- SMP/E does not support a continuation of the ./ CHANGE statement.

Examples

The following examples are provided to help you use the ++SRCUPD MCS:
- "Example 1: Updating an Existing Source"
- "Example 2: Making Subsequent Source Updates"

Example 1: Updating an Existing Source

Here is an example of a SYSMOD containing a ++SRCUPD statement to make a modification to an IBM source module, in this case module JESMOD01, which is part of product EJS1102:

```
++USERMOD(MY00001)          /* User modification        */.
++VER(Z038) FMID(EJS1102)   /* for MVS JES.             */
            PRE(UZ12345)    /* Current service level.   */.
++SRCUPD(JESMOD01)          /* Update this JES MOD.     */
                            /* DISTLIB already known.   */.
./ CHANGE NAME=JESMOD01
         LA   R1,MYPARM                            00001000
         BALR MYPGM                                00001100
MYPGM    EQU  *                                    00500000
         ...                                       00500100
         ...                                       00500200
         B   R14                                   00500300
```

Example 2: Making Subsequent Source Updates

Assume that, after installing the modification given in the first example, you need to make another modification. Assume the following lines had to be changed:

```
         ...                                       00500150
         BALR  MYPGM2                              00500160
MYPGM2   EQU   *                                   00600000
         ...                                       00600100
         ...                                       00600200
         B     R14                                 00600300
```

You have two choices as to the method of building the second modification:

1. The first method is to build the second SYSMOD to contain only the newly changed lines of code, and then specify the PRE operand in both the current IBM service level and the previous user modification.
2. The second method is to build the second SYSMOD to contain all the user modifications to this module; then specify the PRE operand in the current IBM service level and supersede the previous user modification.

Here is an example of a SYSMOD for the first method:

```
++USERMOD(MY00002)          /* User modification        */.
++VER(Z038) FMID(EJS1102)   /* for MVS JES.             */
            PRE(UZ12345     /* Current service level    */
                MY00001)    /* plus previous USERMOD.   */.
++SRCUPD(JESMOD01)          /* Update this JES MOD.     */
                            /* DISTLIB already known.   */.
./ CHANGE NAME=JESMOD01
         ...                                       00500150
         BALR  MYPGM2                              00500160
MYPGM2   EQU   *                                   00600000
         ...                                       00600100
         ...                                       00600200
         B     R14                                 00600300
```

Here is an example of a SYSMOD for the second method:

```
++USERMOD(MY00002)          /* User modification          */.
++VER(Z038) FMID(EJS1102)   /* for MVS JES.               */
            PRE(UZ12345)    /* Current service level.     */
            SUP(MY00001)    /* Supersede previous usermod.*/.
++SRCUPD(JESMOD01)          /* Update this JES MOD.       */
                            /* DISTLIB already known.     */.
./ CHANGE NAME=JESMOD01
         LA   R1,MYPARM                          00001000
         BALR MYPGM                              00001100
MYPGM    EQU  *                                  00500000
         ...                                     00500100
         BALR  MYPGM2                            00500160
         ...                                     00500200
         B   R14                                 00500300
         ...                                     00500150
MYPGM2   EQU   *                                 00600000
         ...                                     00600100
         ...                                     00600200
         B     R14                               00600300
```

The advantages to the second method are that all modifications to one source are contained in a single SYSMOD, and if that SYSMOD has to be restored or re-applied, processing is much more efficient.

Note: The SMP/E ++SRCUPD MCS is the same for both methods; only the ++VER MCS and the actual update control cards change.

++USERMOD MCS

The ++USERMOD MCS identifies a user modification. This type of SYSMOD can be used to add user-defined functions or to replace or update elements for IBM-supplied code in the target or distribution libraries. All other MCSs for this SYSMOD follow this header MCS. For more information about packaging a USERMOD, see the *SMP/E User's Guide*.

Syntax

++USERMOD MCS

```
►►──++USERMOD(sysmod_id)──┬──────────────────────────┬──────────────────────►
                          └─DESCRIPTION(description)─┘

►──┬──────────────────────────────────────────┬──┬──────────────────┬──.──►◄
   └─FILES(number)──┬──────────────────────┬──┘  └─REWORK(level)──┘
                    └─RFDSNPFX(relfile_prefix)─┘
```

Operands

DESCRIPTION

specifies a descriptive name to be associated with this SYSMOD. *MVS Packaging Rules* manual.

- DESCRIPTION value can also be specified DESC.
- The DESCRIPTION value can be in single-byte characters (such as English alphanumeric) or double-byte characters (such as Kanji).
- The DESCRIPTION value can contain up to 64 bytes of data, including blanks. (For double-byte data, the 64-byte maximum includes all shift-in and shift-out characters, as well as the double-byte characters.) Extra blanks, as well as leading and trailing blanks are deleted.
- The DESCRIPTION value can span multiple 80-byte records. Data must continue up to and including column 72 and begin in column 1 of the next line. All data past column 72 is ignored. The break does not translate to a blank unless a blank is explicitly coded in column 72 of the first line or in column 1 of the second line.
- If DESCRIPTION is specified, it must contain at least one non-blank character.
- If parentheses are included in the text, they must be in matched pairs.

FILES

specifies the number of relative files belonging to this USERMOD. It can be a decimal number from 1 to 9999. For information about packaging SYSMODs in relative files, see the *MVS Packaging Rules* manual.

Notes:

1. Although SMP/E allows you to package USERMODs in relative files, they are not generally packaged in this format.
2. If a packager uses a high-level qualifier on RELFILE data sets, the RFDSNPFX operand on the header MCS (not the RFPREFIX operand on the RECEIVE command) **must** be used to identify that high-level qualifier.

REWORK
specifies the level of this SYSMOD, which was reworked for minor changes. Up to eight numeric characters can be specified.

For SYSMODs supplied by IBM, the REWORK level is *yyyyddd*, where *yyyy* is the year the SYSMOD was reworked and *ddd* is the Julian date.

REWORK allows an updated SYSMOD to be automatically received again, as long as it is more recent than the version that has already been received. This takes the place of rejecting the SYSMOD and receiving it again.

Note: If a SYSMOD appears more than once in the SMPPTFIN data set, the first occurrence may be received. However, none of the subsequent versions of the SYSMOD are received, even if their rework level is higher than the one for the first version of the SYSMOD. (Message GIM40001E is issued for each of the subsequent versions of the SYSMOD.)

RFDSNPFX
identifies to SMP/E the prefix used in the relative file data set names for this SYSMOD. SMP/E uses this prefix when allocating data set names for the SYSMOD's relative files during RECEIVE processing.

- This operand can be specified only if the FILES operand is also specified.
- The RFDSNPFX value specified on the MCS statement must match the actual prefix used in the data set names for the associated relative files.

  For example, if the names of the relative files created for a SYSMOD start with "IBM", as in **IBM.***sysmod_id***.F1**, the header MCS statement for the SYSMOD must specify **RFDSNPFX(IBM)** so SMP/E knows which prefix to use when allocating the data set names for the SYSMOD's relative files during RECEIVE processing.
- Following standard data set naming conventions, the prefix can be from 1 to 8 alphanumeric or national ($, #, @) characters or a dash (–).

  To enable full Security Server protection for tape data sets and to keep the tape header within the 17-character limit (including periods), you should limit the prefix to 1 to 3 characters. If the name exceeds the 17-character limit, only the rightmost 17 characters are written to the tape header label.

sysmod_id
specifies a unique 7-character system modification identifier for the USERMOD. For more information, see "Naming Conventions for SYSMODs" on page 463.

Usage Notes

If you have updated an element, SYSMODs other than functions cannot replace it unless you explicitly allow them to by bypassing MODID checking. However, if you install a function, it may overlay your user modifications. SMP/E issues a warning message when it detects this condition.

Examples

A source (IFBSRC02) owned by function SYSMOD FXY1040 is to be modified. Your modification requires a service level provided UZ00007; you are only updating, not replacing, the source. You have chosen a SYSMOD ID of MY00001. Here is an example of a SYSMOD containing a ++SRCUPD statement that accomplishes this:

```
++USERMOD(MY00001)          /* USERMOD number           */.
++VER(Z038) FMID(FXY1040)   /* for function FXY1040     */
            PRE(UZ00007)    /* at this service level.   */.
++SRCUPD(IFBSRC02)          /* Update this source       */
```

```
            DISTLIB(IFBSRC) /* in this DLIB.           */.
./ CHANGE NAME=IFBSRC02
...
... update control cards
...
```

For additional examples of USERMODs, see “++SRCUPD MCS” on page 97 and *SMP/E User’s Guide*.

++VER MCS

The ++VER MCS describes the environment required for receiving and installing a SYSMOD. A SYSMOD must contain a separate ++VER MCS for each environment to which it applies. At least one ++VER MCS must be present in a SYSMOD, and a maximum of 255 ++VER statements are allowed for each SYSMOD.

Syntax

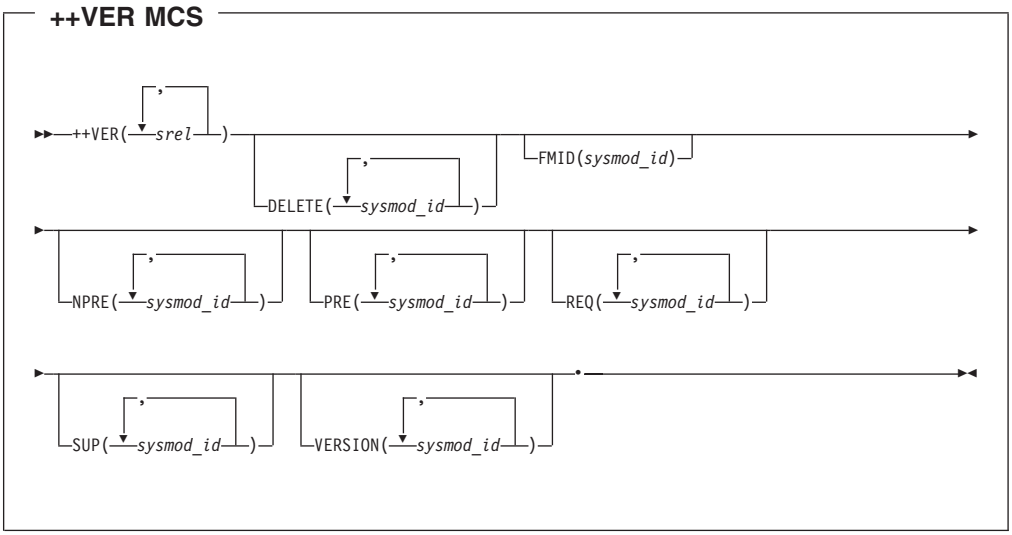

Operands

DELETE
indicates which function SYSMODs should be deleted when this function is installed. These functions are permanently deleted and cannot be restored.

DELETE can be specified only in function SYSMODs.

The same SYSMOD can be specified on both DELETE and SUP. This cleans up entries for the deleted function, and, at the same time, allows SYSMODs that name the deleted function as a requisite to still be installed.

SYSMODs specified in the DELETE operand do not have to be specified in VERSION operands of ++VER, ++MAC, ++SRC, or ++MOD statements.

For additional information on the effect of DELETE during APPLY and ACCEPT processing, see the *SMP/E Commands* manual.

FMID
FMID identifies the function to which a SYSMOD applies. **FMID** must be specified for all SYSMODs except base functions.

The following considerations relate to the FMID operand:

- Unlike prerequisites specified by the PRE operand, the functional prerequisite specified by the FMID operand is satisfied only by the specified SYSMOD. It is not satisfied by another SYSMOD that supersedes that function.
- When specified on the ++VER MCS for a function, FMID defines the function as a dependent function. In this case, FMID indicates that the elements supplied by the dependent function SYSMOD are functionally higher than the specified base function.

A function cannot be both a base function and a dependent function. Therefore, if a base function contains more than one ++VER MCS, none of them can specify the FMID operand. Likewise, if a dependent function contains more than one ++VER MCS, all of them must specify the FMID operand.

- When specified on the ++VER MCS for a non-function SYSMOD, FMID indicates the functional level of all elements in the SYSMOD.
- SMP/E RECEIVE processing does not receive a dependent function unless the FMID of the base is already present in the global zone or BYPASS(FMID) is specified. For more information on packaging of dependent SYSMODs, refer to RECEIVE processing in the *SMP/E Commands* manual.

NPRE
indicates which function SYSMODs cannot exist in the same zone as this function. These are negative prerequisite SYSMODs. The current SYSMOD cannot be applied or accepted if any of the listed SYSMODs are already present.

This operand has no effect on RECEIVE eligibility.

NPRE can only be specified within a function SYSMOD.

PRE
indicates which SYSMODs are prerequisites for this SYSMOD. A prerequisite SYSMOD must either be already installed, or must be installed concurrently with this SYSMOD. For additional information on how prerequisites are resolved during APPLY and ACCEPT processing, see the *SMP/E Commands* manual.

If a SYSMOD replaces an existing element, the PRE operand must specify the previous SYSMOD that replaced the element (RMID) and all the SYSMODs that have updated the element (UMIDs) since it was last replaced.

If a SYSMOD updates an existing element, the PRE operand must specify the previous SYSMOD that replaced the element. It should also specify the last SYSMOD that updated the element since then.

This operand has no effect on RECEIVE eligibility.

REQ
indicates which SYSMODs are requisites for this SYSMOD. The specified SYSMOD must either be already installed, or must be installed concurrently with this SYSMOD. If the specified SYSMOD also specifies this SYSMOD as a requisite, these two SYSMODs are corequisites, and neither can be installed independently; they must be installed within the same APPLY and ACCEPT command. For additional information on how requisites are resolved during APPLY and ACCEPT processing, see the *SMP/E Commands* manual.

This operand has no effect on RECEIVE eligibility.

srel
specifies the system or subsystem release on which the SYSMOD can be installed. The SREL must contain four alphanumeric characters, usually one alphabetic character followed by three numeric characters. These are the systems and subsystems defined by IBM, with their SRELs:

System	SREL
DB2	P115
CICS	C150
IMS	P115
MVS	Z038
NCP	P004

The SREL is used during RECEIVE processing to determine whether a SYSMOD should be received. For more information on how the SREL operand is processed, see the *SMP/E Commands* manual.

SUP
indicates which SYSMODs are superseded (contained in and replaced) by this SYSMOD. For example, it may specify one or more APARs fixed in the element modifications supplied with this SYSMOD.

For functions, the same SYSMOD can be specified on both DELETE and SUP. This cleans up entries for the deleted function, and, at the same time, allows SYSMODs that name the deleted function as a requisite to still be installed.

For PTFs, APARs, and USERMODs to properly supersede another SYSMOD, all the elements in the superseded SYSMOD must be contained in either the superseding SYSMOD or a SYSMOD from the requisite set for the superseding SYSMOD (unless the element is being deleted by the superseding SYSMOD).

VERSION
indicates functions whose elements should be considered functionally lower than the elements contained in this SYSMOD. It specifies one or more function SYSMODs that currently contain the element. The function containing the ++VER MCS takes over ownership of all the elements from the specified functions.

When **VERSION** is specified on an element statement, it overrides any VERSION operand values specified on the ++VER MCS.

Note: A SYSMOD containing an element update (++MACUPD, ++SRCUPD, or ++ZAP) cannot change the ownership of the element. The ownership can be changed (with the ++VER VERSION operand) only if the SYSMOD provides a replacement for the element.

Usage Notes

- You can build a SYSMOD that can be processed by previous versions of SMP/E, as well as this version of SMP/E. For service SYSMODs, this construction requires at least two ++VER statements, one processable by previous versions of SMP/E and the other processable by this version of SMP/E. The SRELs in these ++VER statements must be different, so the SYSMOD can be processed correctly by the applicable version of SMP/E.
- A SYSMOD cannot contain multiple ++VER statements that have identical SREL and FMID values, because SMP/E would not be able to determine which ++VER MCS to use in doing the remaining applicability checking during APPLY and ACCEPT processing.
- You cannot specify the same SYSMOD more than once on a single ++VER operand. Likewise, you generally cannot specify the same SYSMOD on more than one operand. However, you can specify the same SYSMOD on VERSION and another operand (except FMID). You can also specify the same SYSMOD on the DELETE and SUP operands.
- Corequisite SYSMODs (which are related through the REQ operand) that are applicable to the same FMID **cannot** have elements in common. Because the REQ operand implies no service hierarchy, SMP/E cannot determine which SYSMOD has the highest service level of the common elements. When the relationship between the SYSMODs containing the common elements is defined through the REQ operand, SMP/E issues an error or warning message.

– If the requisites have an element in common and each contains a replacement for the element, ID check processing fails and neither of the requisites is installed, unless **BYPASS(ID)** is specified.
– If the requisites have an element in common and each contains an update for the element, ID check processing issues a warning message for the requisites. Generally, the requisites are both installed. However, SMP/E does not allow multiple ZAPs for the same module to be processed by the same APPLY command. If this is the case, neither of the requisites is installed; they must be processed by separate APPLY commands.

Examples

The following examples are provided to help you use the ++VER MCS:
- "Example 1: Defining Base and Dependent Functions"
- "Example 2: Defining Intersecting Dependent Functions"
- "Example 3: Deleting a Previous Level of a Function" on page 107
- "Example 4: Deleting a Function without Replacing It (Dummy Delete)" on page 107

Example 1: Defining Base and Dependent Functions

Assume you want to package one of your user applications as a function so you can use SMP/E in installing and maintaining it. You also have an optional enhancement to that product you want to package. The base function has two modules, USRMOD01 and USRMOD02, which are in link-edit format and reside in the library pointed to by the USRLIBXX DD statement. The optional enhancement changes USRMOD02 and depends on the base application being present. Here are examples of SYSMODs for these functions:

```
++FUNCTION(EUSR001)         /* Base application         */.
++VER(Z038)                 /* for MVS version.         */.
++MOD(USRMOD01)             /* Has this MOD             */
            DISTLIB(AOS12)  /* in this DLIB.            */
            LKLIB(USRLIBXX) /* Replacement is here      */.
++MOD(USRMOD02)             /* Has this MOD             */
            DISTLIB(AOS12)  /* in this DLIB.            */
            LKLIB(USRLIBXX) /* Replacement is here.     */.

++FUNCTION(FUSR011)         /* Dependent function       */.
++VER(Z038)                 /* for MVS version.         */
            FMID(EUSR001)   /* Base application must be
                               present.                 */.
++MOD(USRMOD02)             /* Has this MOD             */
            DISTLIB(AOS12)  /* in this DLIB.            */
            LKLIB(USRLIBXX) /* Replacement is here.     */.
++MOD(USRMOD03)             /* Has this MOD             */
            DISTLIB(AOS12)  /* in this DLIB.            */
            LKLIB(USRLIBXX) /* Replacement is here.     */.
```

The dependent function, FUSR011, specifies the base function on its FMID operand. This means the base function must be present in order for the dependent function to be installed. The FMID operand also indicates that if the two functions have any elements in common, the version in the dependent product is the one that is to be installed. The dependent product has now assumed ownership of those elements.

Example 2: Defining Intersecting Dependent Functions

Assume you want to add another dependent function for the base function defined in the preceding example. It works whether or not the other dependent function is installed. Here is an example of a SYSMOD containing a ++VER statement to define the relationship between the dependent functions:

```
++FUNCTION(FUSR012)         /* Dependent function       */.
++VER(Z038)                 /* for MVS version.         */
            FMID(EUSR001)   /* Base application must be
                               present.                 */
            VERSION(FUSR011)  /* If present is at higher
                               functional level.        */.
++MOD(USRMOD02)             /* Has this MOD             */
            DISTLIB(AOS12)  /* in this DLIB.            */
            LKLIB(USRLIBXX) /* Replacement is here.     */.
++MOD(USRMOD04)             /* Has this MOD             */
            DISTLIB(AOS12)  /* in this DLIB.            */
            LKLIB(USRLIBXX) /* Replacement is here.     */.
```

After this function is installed, module USRMOD02 is the version from function FUSR012, no matter what the former functional level was.

Example 3: Deleting a Previous Level of a Function

Assume you want to provide a new level of the base function defined in the first example. It includes both of the dependent functions for the original base function. Here is an example of a SYSMOD containing a ++VER statement deleting the previous level of the function:

```
++FUNCTION(EUSR002)         /* New base application     */.
++VER(Z038)                 /* for MVS version.         */
            DELETE(EUSR001) /* Delete prev level.       */.
++MOD(USRMOD01)             /* Has this MOD             */
            DISTLIB(AOS12)  /* in this DLIB.            */
            LKLIB(USRLIBXX) /* Replacement is here.     */.
++MOD(USRMOD02)             /* Has this MOD             */
            DISTLIB(AOS12)  /* in this DLIB.            */
            LKLIB(USRLIBXX) /* Replacement is here.     */.
++MOD(USRMOD03)             /* Has this MOD             */
            DISTLIB(AOS12)  /* in this DLIB.            */
            LKLIB(USRLIBXX) /* Replacement is here.     */.
++MOD(USRMOD04)             /* Has this MOD             */
            DISTLIB(AOS12)  /* in this DLIB.            */
            LKLIB(USRLIBXX) /* Replacement is here.     */.
```

After the new function is installed, all references to SYSMODs EUSR001, FUSR011, and FUSR012 are deleted from the target zone and distribution zone (except the SYSMOD entry for EUSR001, which indicates it was deleted by EUSR002).

This SYSMOD does not require the previous level of the base function to be installed. The DELETE operand just says that if that previous function was installed, SMP/E should delete it before installing the new level. For more information on delete processing for the APPLY and ACCEPT commands, see the *SMP/E Commands* manual.

Example 4: Deleting a Function without Replacing It (Dummy Delete)

Assume you no longer need a particular function, and you want to delete it from your system. First, you must make sure that no other functions depend on the function you want to delete. Once you have done this, you need to define a dummy function SYSMOD that deletes the function you want to delete. You then receive, apply, and accept the dummy function, and run UCLIN to delete the SYSMOD entries for the deleted function and for the dummy function.

For example, assume you are ready to delete function MYFUNC1 using dummy function DELFUNC. MYFUNC1 is applicable to SREL Z038 and is installed in target zone TGT1 and distribution zone DLIB1. Here is an example of the dummy function:

```
++FUNCTION(DELFUNC)     /* Any valid unique SYSMOD ID.   */.
++VER(Z038)             /* For SREL Z038 (MVS products). */
     DELETE(MYFUNC1)    /* Deletes MYFUNC1.              */.
```

These are the commands you use to receive and install the dummy function, and to delete the SYSMOD entries for the dummy function and the deleted function:

```
SET     BDY(GLOBAL)      /* Set to global zone.       */.
RECEIVE S(DELFUNC)       /* Receive the function.     */.
SET     BDY(TGT1)        /* Set to applicable target. */.
APPLY   S(DELFUNC)       /* Apply to delete old       */
                         /* function.                 */.
SET     BDY(DLIB1)       /* Set to applicable DLIB.   */.
ACCEPT  S(DELFUNC)       /* Accept to delete old      */
                         /* function.                 */.
SET     BDY(TGT1)        /* Set to applicable target. */.
UCLIN.
DEL     SYSMOD(DELFUNC)  /* Delete SYSMOD entries for */.
DEL     SYSMOD(MYFUNC1)  /* dummy and old function.   */.
ENDUCL.
SET     BDY(DLIB1)       /* Set to applicable DLIB.   */.
UCLIN.
DEL     SYSMOD(DELFUNC)  /* Delete SYSMOD entries for */.
DEL     SYSMOD(MYFUNC1)  /* dummy and old function.   */.
ENDUCL                   /*                           */.
```

When you accept the dummy function, SMP/E automatically deletes the associated SYSMOD entry from the global zone and the MCS entry from the SMPPTS.

To complete the cleanup, you should also use the REJECT command to delete any SYSMODs and HOLDDATA applicable to the dummy function and the old function. In addition, you should delete the FMIDs from the GLOBALZONE entry to prevent SMP/E from receiving any SYSMODs or HOLDDATA applicable to either of those functions. Here are examples of the commands you can use to do this.

```
SET    BDY(GLOBAL)       /* Set to global zone.       */.
REJECT HOLDDATA NOFMID   /* Reject SYSMODs, HOLDDATA  */
       PRODUCT           /* PRODUCT information       */
       DELETEFMID        /* for the deleted functions.*/
       (DELFUNC MYFUNC1) /* Delete the FMIDs from the */
                         /* GLOBALZONE entry.         */.
```

Note: If you delete a function that used totally copied libraries, there will be DLIB entries left in the zone after the deletion, which may cause problems if this function is later reinstalled. You should run UCLIN to delete the leftover DLIB entries to ensure that SMP/E will create new DLIB entries that point to the proper libraries when a new copy of the function is installed.

++ZAP MCS

The ++ZAP MCS describes a module update within a PTF, APAR fix, or USERMOD. It must precede the IMASPZAP statements within the SYSMOD.

Syntax

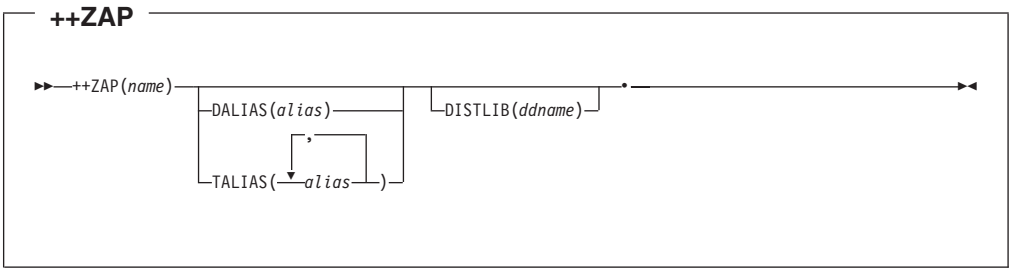

Operands

DALIAS
is the alias name of a module that has an alias in the distribution library, but not in the target library. This might be used if the module is included under its alias name during system generation.

Note: DALIAS is mutually exclusive with TALIAS.

DISTLIB
specifies the ddname of the distribution library for the specified module.

Note: This operand must be specified if the module has not been previously recorded on the target zone or distribution zone. If a MOD entry already exists in the target zone or distribution zone and the value currently in that entry does not match that specified in the DISTLIB operand, the SYSMOD is not applied or accepted.

name
specifies the name of the module member in the distribution library and, optionally, in the target system library. The name can contain any alphanumeric characters and $, #, @, or hex C0.

Note: If the module to be updated has been assembled, specify the name of the assembled module, not the CSECT name.

TALIAS
identifies all the alias names of a module that has aliases in both the target and distribution libraries.

You can use TALIAS for a module that was copied from a distribution library into a target library (defined by JCLIN data as a copied module), but not for one that is link-edited (defined by JCLIN data as a link-edited module). **TALIAS** must be specified on the ++MOD MCS even if **ALIAS** was specified on the COPY SELECT statement.

Note: TALIAS is mutually exclusive with DALIAS.

Usage Notes

- If a SYSMOD containing a ++ZAP statement attempts to change the ownership (FMID) of the element (with the VERSION operand), the SYSMOD cannot be installed.
- The changes for the module must immediately follow the ++ZAP MCS and must not contain any records that start with ++.
- The only IMASPZAP control statements allowed in a SYSMOD are:

ABSDUMP	DUMP	NAME	VER
ABSDUMPT	DUMPT	REP	VERIFY
BASE	IDRDATA	SETSSI	*(comment)

- An EXPAND control statement in link-edit utility format can be placed within IMASPZAP input to allow lengthening of control sections. The EXPAND statement must follow the NAME statement. For the syntax and description of the EXPAND statement, see *z/OS DFSMS Program Management*, SC27-1130. All control statements must begin in or after column 2.
- Expand type IMASPZAP processing cannot be performed against a noneditable (NE) module.
- Any SETSSI statements placed in the input stream for expand-type IMASPZAP processing must be in a form acceptable to both IMASPZAP and the link-edit utility; that is, they must begin in column 2 or after. The SSI statements must follow the EXPAND statements.
- The name specified on the ++ZAP MCS must be the same as the name of the distribution library module. The CSECT value on the IMASPZAP NAME statement must be the same as the load module's CSECT name. That CSECT name is usually the same as the distribution library name, but it can be different. For example, if the module to be updated has been assembled, the ++ZAP statement should specify the name of the assembled module, not the CSECT name.

  The **LIST LMOD** statement produces a target zone listing of link-edit utility control statements that might have changed the CSECT name of the member. A link-edit map may be helpful in other cases where the names differ.
- The IMASPZAP NAME statement can optionally be coded as follows:

  ```
  NAME
  csect-name

  or

  NAME
  lmod-name
  csect-name
  ```

  The coding of one operand assumes that operand to be a CSECT name for the module referred to in the ++ZAP statement. In this case, all load modules containing the module named in the ++ZAP statement are processed by IMASPZAP.

  Two operands can be specified, in which case the second operand is assumed to be a CSECT name. The first operand is assumed to be a valid load module containing the module named in the ++ZAP statement. In this case, only the indicated load module is processed by IMASPZAP.
- When using IMASPZAP on an assembled module, be careful: The modification identifier is updated, but not the modification of any associated macros.

It is not recommended that you use IMASPZAP to modify assembled modules. An assembled module modified by IMASPZAP does not cause updating of the distribution library during accept processing; therefore, a subsequently generated system does not contain the IMASPZAP modification.

A more satisfactory method of updating assembled modules is to update the macros that generate them.

- SMP/E processing does not save a backup copy of the nucleus during apply processing when the nucleus is modified by a SYSMOD containing a non-expand-type IMASPZAP modification.
- Only one ZAP can be applied to a module by a single APPLY command. If you need to install several ZAPs for a given module, each one must be packaged separately and installed by a separate APPLY command.
- If you need to install a ++ZAP change on a live system library and that library uses library lookaside (LLA), virtual lookaside facility (VLF), or both, you must do some setup work before installing the change. Otherwise, the change might not take effect, even after installation. See *z/OS MVS Initialization and Tuning Guide* for guidance on:
  - Removing libraries from LLA and VLF control
  - Refreshing LLA and VLF

  Note: Installing a change on a live system is **not** recommended.

Examples

The examples in this section are based on the load module structure shown in Figure 2.

```
Load Module Name     Load Module Name
  Module Name          Module Name
    CSECT Name           CSECT Name

LMODA                LMODB
  MOD1                 MOD1
    CSECT1               CSECT1
    CSECT2               CSECT2
    CSECT3               CSECT3
  MOD2                 MOD2
    MOD2                 MOD2
  MOD3
    MOD3
  MOD4
    MOD4
```

Figure 2. Load Module Structure for ++ZAP Examples

The following examples show how ++ZAP statements can be used to update modules, load modules, and CSECTs within modules:

- “Example 1: Changing All Load Modules That Contain the Same Module” on page 112
- “Example 2: Changing the Only Load Module That Contains a Given Module” on page 112
- “Example 3: Changing One of Several Load Modules That Contain a Given Module” on page 112
- “Example 4: Expanding a Module” on page 112

Example 1: Changing All Load Modules That Contain the Same Module

Assume you want to change CSECT2 in module MOD1, which is in both LMODA and LMODB. Here is an example of a SYSMOD that accomplishes this by specifying the CSECT name on the NAME statement without including any load module names:

```
++USERMOD(MYMOD01).
++VER(Z038) FMID(FXY1000).
++ZAP(MOD1).
  NAME CSECT2
  VER 000D FF4160
  REP 000D FE4160
```

Example 2: Changing the Only Load Module That Contains a Given Module

Assume you want to change CSECT MOD3 in module MOD3, which is only in LMODA. Here is an example of a SYSMOD that accomplishes this by specifying the CSECT name on the NAME statement without including any load module names:

```
++USERMOD(MYMOD02).
++VER(Z038) FMID(FXY1000).
++ZAP(MOD3).
  NAME MOD3
  VER 000A 00
  REP 000A FF
```

Example 3: Changing One of Several Load Modules That Contain a Given Module

Assume you want to change CSECT2 in module MOD1, which is in both LMODA and LMODB. You want to update only the version in LMODB. Here is an example of a SYSMOD that accomplishes this by specifying both the load module name and the CSECT name on the NAME statement.

```
++USERMOD(MYMOD03).
++VER(Z038) FMID(FXY1000).
++ZAP(MOD1).
  NAME LMODB CSECT2
  VER 0000 00
  REP 0000 FF
```

Example 4: Expanding a Module

Assume you want to update CSECT3 with an EXPAND request. CSECT3 is in module MOD1, which is in both LMODA and LMODB. Here is an example of a SYSMOD that accomplishes this by specifying the CSECT name on the NAME statement and on an EXPAND statement.

```
++USERMOD(MYMOD04).
++VER(Z038) FMID(FXY1000).
++ZAP(MOD1).
  NAME CSECT3
  VER 000D FF
  REP 000D FE
  EXPAND CSECT3(4)
```

Chapter 3. Defining Control Statements in SMPPARM Members

The SMPPARM data set can contain members that allow you to customize SMP/E as follows:

Member name	Use
GIMDDALC	Defines data sets to be dynamically allocated
GIMEXITS	Defines exit routines
GIMOPCDE	Defines macro and assembler operation codes

GIMDDALC Control Statements

SMPPARM member GIMDDALC is used to specify data sets that are to be dynamically allocated by SMP/E. The following types of data sets may be specified in GIMDDALC:

- Data sets to be allocated to a SYSOUT class (or to the terminal for foreground execution)
- Data sets to be allocated as temporary data sets
- SMPTLIB data sets

During any attempt to allocate a data set, SMP/E first looks for a DD statement specified in the job. If no DD statement was specified, SMP/E then looks for a DDDEF entry in the zone. If no DDDEF entry was found, SMP/E then checks to see if there is an SMPPARM data set. If so, and there is a GIMDDALC member within it, SMP/E looks for a GIMDDALC control statement for the corresponding ddname.

Syntax

SYSOUT Data Sets

```
►►─DD(ddname)─SYSOUT(─┬─class──────┬─┬──────────┬─)─•─────────────────────────►◄
                      ├─*──────────┤ └─,TERM────┘
                      └─DEFAULT────┘
```

SMPWRKn and SYSUTn Data Sets

```
►►─DD(ddname)─┬─BLOCK(size)──┬─┬─SPACE(primary,secondary)─┬─┬─DIR(nnnn)─┬─┬─UNIT(type)─┬──►
              ├─CYLINDERS────┤ └────────────────────────┘ └───────────┘ └────────────┘
              └─TRACKS───────┘

►─┬─VOLUME(volid)─┬─┬─DATACLAS(name)─┬─┬─MGMTCLAS(name)─┬─┬─STORCLAS(name)─┬──►
  └───────────────┘ └────────────────┘ └────────────────┘ └────────────────┘

►─┬─DSNTYPE(─┬─LIBRARY─┬─)─┬─•──────────────────────────────────────────────►◄
  └──────────┘ └─PDS────┘
```

© Copyright IBM Corp. 1986, 2002

SMPTLIB Data Sets

```
►►──DD(SMPTLIB)──┬──────────────────────────────────────┬──┬──────────┬──.──────────────────►◄
                 └──SPACE(primary,secondary)──┬─TRACKS─┬─┘  └─DIR(nnnn)─┘
                                              └────────┘
```

Operands

DD
identifies the ddname of the data set to be allocated.

- *ddname* can be from 1 to 8 alphanumeric (A through Z, and 0 through 9), or national characters (@,#, or $), and must start with an alphabetic or national character.
- The **DD** operand must be the first operand specified on a GIMDDALC control statement.

BLOCK(*size*), CYLINDERS, or TRACKS
specifies the space units to be used in allocating the data set: blocks, cylinders, or tracks. *size* is the size of each block to be allocated, and can be from 1 to 5 decimal digits. To specify the number of these units, use the **SPACE** operand.

BLOCK can be specified as **BLK**, **CYLINDERS** can be specified as **CYL**, and **TRACKS** can be specified as **TRK**.

DATACLAS
specifies the name of a data class to be used for allocating a data set managed by SMS.

The data class can be from 1 to 8 alphanumeric characters (A through Z and 0 through 9) or national characters (@, #, $).

DIR
specifies the number of directory blocks to allocate.

The number can contain from 1 to 4 decimal digits.

DSNTYPE
specifies the type of partitioned data set to be created.

LIBRARY	indicates a PDSE is to be created.
PDS	indicates a PDS is to be created.

MGMTCLAS
specifies the name of a management class to be used for allocating a data set managed by SMS.

The management class can be from 1 to 8 alphanumeric characters (A through Z and 0 through 9) or national characters (@, #, $).

SPACE
specifies the primary and secondary space allocation for a data set. To specify the units for the space allocation, use one of the **BLOCK**, **CYLINDERS**, or **TRACKS** operands.

- The *primary* and *secondary* values can contain from 1 to 4 decimal digits, and the two values must be separated by a comma or a blank.
- The units of *primary* and *secondary* space allocation for SMPTLIB data sets is always tracks.

STORCLAS
specifies the name of a storage class to be used for allocating a data set managed by SMS.

The storage class can be from 1 to 8 alphanumeric characters (A through Z and 0 through 9) or national characters (@, #, $).

SYSOUT
specifies the output class for SYSOUT data sets.

- The *class* value must be 1 alphabetic or numeric character (A through Z and 0 through 9).
- An asterisk (*) indicates the class from the MSGCLASS parameter on the JOB statement is to be used.
- **DEFAULT** indicates the class from the OUTPUT DD statement is to be used. If no OUTPUT DD statement is found, the system default message class is used.
- **TERM** indicates if SMP/E is executing in the foreground, the data set is to be allocated to the terminal.
- **SYSOUT** is mutually exclusive with all other operands except **DD**.
- You can not specify **SYSOUT** for SMPTLIB data sets.

UNIT
specifies the UNIT type the data set is to reside on.

UNIT can be any nonblank 1 to 8 character string.

VOLUME
specifies the volume serial number of the volume the data set is to reside on.

The volume serial number can be from 1 to 6 alphanumeric characters (A through Z and 0 through 9).

Syntax Notes

1. GIMDDALC control statements must each start on a new line.
2. GIMDDALC control statements may be continued on more than one line. SMP/E assumes a statement is continued if it did not find a period (.) before column 73.
3. SMP/E ignores columns 73 through 80. If data, such as a period, is specified beyond column 72, SMP/E will ignore it and indicate an error in the control statement following the one containing the data.
4. GIMDDALC control statements may contain comments. Comments start with **/*** and end with ***/**. The first ***/** encountered after the initial **/*** will end the comment. A comment can appear anywhere within a statement. A comment after the ending period must start on the same line as the period, and you cannot start any additional comments after that final comment. For example, you can code a comment like this:

   ```
   DD(SMPTLIB) SPACE(5,5) DIR(20).  /* Comment after period continued
                                       on subsequent lines is OK.     */
   ```

   However, you cannot code a comment like this:

   ```
   DD(SMPTLIB) SPACE(5,5) DIR(20).  /* Comment after period OK,       */
                                    /* but starting another comment
                                       causes a syntax error.         */
   ```

   This causes a syntax error at the start of the second comment after the period.
5. Only one GIMDDALC control statement is allowed for a single data set.

6. At least one operand (other than **DD**) must be specified on each GIMDDALC control statement.
7. For SMPTLIB, only the **SPACE**, **TRACKS**, and **DIR** operands are allowed.

Sample GIMDDALC Member

The following is a sample GIMDDALC member. The member is named GIMDDALC and is shipped with SMP/E in the SAMPLIB target library.

```
/*
**********************************************************************
*                                                                    *
*  Licensed Materials - Property of IBM                              *
*  5694-A01 5655-G44                                                 *
*  (C) Copyright IBM Corp. 1999, 2001                                *
*                                                                    *
**********************************************************************
*                                                                    *
*  GIMDDALC -- Sample GIMDDALC member for the SMPPARM data set       *
*                                                                    *
**********************************************************************

  This sample member is a model to assist the SMP/E user in constructing
  a GIMDDALC member specifically for their use.  A user should copy this
  sample into the GIMDDALC member of a data set.  That data set is then
  defined to SMP/E using the SMPPARM ddname either using a DD statement
  in the SMP/E job, or using a DDDEF entry.

  The GIMDDALC member contains information used to dynamically allocate
  three kinds of data sets:

    1. Data sets to be allocated to a SYSOUT class (or to the terminal
       for foreground execution),
    2. Data sets to be allocated as temporary data sets, and
    3. SMPTLIB data sets.

  During any attempt to allocate a ddname, SMP/E will first look for a
  DD statement specified in the job.  If no DD statement was specified,
  SMP/E will look for a DDDEF entry in the zone.  If no DDDEF entry was
  found, SMP/E will then go to member GIMDDALC in the SMPPARM data set.
  If there is an SMPPARM data set, and there is a GIMDDALC member within
  it, SMP/E will look for an appropriate control statement.

  NOTE: The allocation values in the control statements of this sample
        member are not intended to be recommendations for the actual
        values you should use and will not be appropriate for all users
        and all environments.

  See the "SMP/E Reference" for details on the syntax of the control
  statements and on the use of member GIMDDALC.
```

Figure 3. Sample GIMDDALC member provided in SAMPLIB (Part 1 of 2)

```
*********************************************************************
*                                                                   *
* CHANGE_ACTIVITY                                                   *
*                                                                   *
* ----------------------------------------------------------------- *
* FLAG REASON  RELEASE   DATE   ORG  DESCRIPTION                    *
* ---- ------- ------- -------- ---  ------------------------------ *
* $L0= ACE0029  29.00  03/12/99 KJQ: ALTERNATE CUSTOMIZATION        *
*                                                                   *
*********************************************************************
*   CHANGE FLAG KEY: M@PNC                                          *
*   WHERE:                                                          *
*                                                                   *
* M= MULTIPLE    P= DCRS = D,E,F,G    N= 0-9,A-Z     C= A = ADD      *
*    FOR DELETE     RMPS = H,I,J,K    (USE '0' ONLY     C = CHANGE   *
*    FLAGS ONLY     LINE = L,M,N,O     WHEN ELEMENT     P = COPY     *
*                   PTMS = P,Q,R,S     IS BEING         M = MOVE     *
*                   APARS = 0-9        CREATED)         D = DELETE   *
*********************************************************************

   DEFINE ALLOCATIONS FOR SYSOUT DATA SETS
                                          */
DD(SMPOUT)   SYSOUT(2,TERM).
DD(SMPLIST)  SYSOUT(2).
DD(SMPRPT)   SYSOUT(2).
DD(SMPSNAP)  SYSOUT(2).
DD(SYSPRINT) SYSOUT(*).
DD(LNKPRINT) SYSOUT(*) /* LNKPRINT IS DEFINED IN THE LKED UTILITY ENTRY
                          AND WILL BE USED FOR LINK-EDIT OUTPUT      */.
DD(CPYPRINT) SYSOUT(*) /* CPYPRINT IS DEFINED IN THE COPY UTILITY ENTRY
                          AND WILL BE USED FOR IEBCOPY OUTPUT        */.
DD(SYSUDUMP) SYSOUT(2).
DD(SMPPUNCH) SYSOUT(B).
DD(SMPDEBUG) SYSOUT(2). /*

   DEFINE ALLOCATIONS FOR TEMPORARY DATA SETS
                                             */
DD(SMPWRK1)  BLOCK(3120) SPACE(364,380) DIR(111) UNIT(SYSALLDA).
DD(SMPWRK2)  BLOCK(3120) SPACE(364,380) DIR(111) UNIT(SYSALLDA).
DD(SMPWRK3)  BLOCK(3120) SPACE(364,380) DIR(111) UNIT(SYSALLDA).
DD(SMPWRK4)  BLOCK(3120) SPACE(364,380) DIR(111) UNIT(SYSALLDA).
DD(SMPWRK6)  BLOCK(3120) SPACE(364,380) DIR(111) UNIT(SYSALLDA).
DD(SYSUT1)   BLOCK(3120) SPACE(380,760)          UNIT(SYSALLDA).
DD(SYSUT2)   BLOCK(3120) SPACE(380,760)          UNIT(SYSALLDA).
DD(SYSUT3)   BLOCK(3120) SPACE(380,760)          UNIT(SYSALLDA).
DD(SYSUT4)   TRACKS      SPACE(1,1)              UNIT(SYSALLDA).
DD(SYSPUNCH) TRACKS      SPACE(25,10)   DIR(10)  UNIT(SYSALLDA).
DD(SMPTLOAD) TRACKS      SPACE(50,20)   DIR(16)  UNIT(SYSALLDA). /*

   DEFINE ALLOCATIONS FOR SMPTLIB DATA SETS.  THIS SAMPLE SMPTLIB
   ALLOCATION CORRESPONDS TO SMP/E'S DEFAULT SMPTLIB ALLOCATION.
                                                                  */
DD(SMPTLIB)  TRACKS SPACE(0,0) DIR(0).
```

Figure 3. Sample GIMDDALC member provided in SAMPLIB (Part 2 of 2)

GIMEXITS Control Statements

SMP/E provides support for two exit points in SMP/E command processing. You can write exit routine programs that receive control at those exit points to:

- process statements from SMPPTFIN during the RECEIVE command, and
- control RETRY processing when data sets run out of space during the APPLY, ACCEPT, RESTORE, and LINK commands.

GIMEXITS Statements

The GIMEXITS member of the SMPPARM data set contains control statements used to identify the exit routine programs to be given control at those SMP/E exit points. It is the presence of the control statement that indicates to SMP/E that an exit routine program is to be called at the appropriate exit point during SMP/E processing. The statements not only identify the exit routine program, but also allow you to identify the data set that contains the exit routine program. This eliminates the need to copy the exit routines into the new MIGLIB or LINKLIB data sets; the exit routines can reside in almost any authorized data set you desire.

Syntax

GIMEXITS Control Statement

```
►►─EXIT(─┬─RECEIVE─┬─)─MODNAME(name)─┬──────────────────┬─.──────────────────────►◄
         └─RETRY───┘                 └─DATASET(dataset)─┘
```

Operands

EXIT
identifies the SMP/E exit point that will pass control to the exit routine defined on the **MODNAME** operand of this control statement. Valid values are:

RECEIVE indicates the RECEIVE command exit point will pass control to the exit routine.

RETRY indicates the RETRY exit point will pass control to the exit routine.

The **EXIT** operand must be the first operand specified on a GIMEXITS control statement.

MODNAME
specifies the name of the exit routine to receive control during SMP/E execution at the identified exit point. The exit routine must be a load module residing in an authorized library. If the **DATASET** operand is not specified, SMP/E uses the system search order for programs to locate the exit routine. See the topic “The Search Order the System uses for Programs” in *z/OS MVS Initialization and Tuning Guide* for more information.

The name can be from 1 to 8 alphanumeric characters (A through Z and 0 through 9) or national characters (@, #, $). **MODNAME** is a required operand.

DATASET
specifies the data set name of a load library in which the exit routine resides. The data set must be cataloged and it must be an authorized library. If the **DATASET** operand is not specified, SMP/E uses the system search order for programs to locate the exit routine. See the topic “The Search Order the System uses for Programs” in *z/OS MVS Initialization and Tuning Guide* for more information.

The data set name must conform to standard naming conventions for data sets. Each part of the name must contain from 1 to 8 alphanumeric characters (A through Z and 0 through 9) or dash (-), separated from the other parts by a period (.), with no intervening blanks. The first character of each part must not be numeric or dash, and the maximum length of the entire name is 44 characters (including the periods).

Syntax Notes

1. GIMEXITS control statements must each start on a new line.
2. GIMEXITS control statements may be continued on more than one line. SMP/E assumes a statement is continued if it did not find a period (.) before column 73.
3. SMP/E ignores columns 73 through 80. If data, such as a period, is specified beyond column 72, SMP/E will ignore it and indicate an error in the control statement following the one containing the data.
4. GIMEXITS control statements may contain comments. Comments start with **/*** and end with ***/**. The first ***/** encountered after the initial **/*** will end the comment. A comment can appear anywhere within a statement. A comment after the ending period must start on the same line as the period, and you cannot start any additional comments after that final comment. For example, you can code a comment like this:

   ```
   EXIT(RECEIVE) MODNAME(MYRECEX).  /* Comment after period continued
                                       on subsequent lines is OK.     */
   ```

   However, you cannot code a comment like this:

   ```
   EXIT(RECEIVE) MODNAME(MYRECEX).  /* Comment after period OK,       */
                                    /* but starting another comment
                                       causes a syntax error.         */
   ```

   This causes a syntax error at the start of the second comment after the period.
5. Only one GIMEXITS control statement is allowed for a single exit point.

Sample GIMEXITS Member

The following is a sample GIMEXITS member. The member is named named GIMEXITS and is shipped with SMP/E in the SAMPLIB target library.

```
/*
*********************************************************************
*                                                                   *
*  Licensed Materials - Property of IBM                             *
*  5694-A01 5655-G44                                                *
*  (C) Copyright IBM Corp. 1999, 2001                               *
*                                                                   *
*********************************************************************
*                                                                   *
*  GIMEXITS -- Sample GIMEXITS member for the SMPPARM data set      *
*                                                                   *
*********************************************************************

  This sample member is a model to assist the SMP/E user in constructing
  a GIMEXITS member specifically for their use.  A user should copy this
  sample into the GIMEXITS member of a data set.  That data set is then
  defined to SMP/E using the SMPPARM ddname either using a DD statement
  in the SMP/E job, or using a DDDEF entry.

  The GIMEXITS member contains information used to identify the exit
  routines which are to get control during SMP/E processing at specific
  exit points:

  RECEIVE  The RECEIVE exit point allows you to scan statements in the
           SMPPTFIN data set during RECEIVE command execution.

  RETRY    The RETRY exit point enables you to control SMP/E's RETRY
           processing when a data set runs out of space during APPLY,
           ACCEPT, RESTORE, and LINK command execution.

  See the "SMP/E Reference for details on the syntax of the control
  statements and on the use of member GIMEXITS.

*********************************************************************
*                                                                   *
* CHANGE_ACTIVITY                                                   *
*                                                                   *
* ----------------------------------------------------------------- *
* FLAG REASON  RELEASE   DATE   ORG  DESCRIPTION                    *
* ---- ------- ------- -------- ---  ------------------------------ *
* $L0= ACE2900  29.00  03/12/99 KJQ: ALTERNATE CUSTOMIZATION        *
*                                                                   *
*********************************************************************
*   CHANGE FLAG KEY: M@PNC                                          *
*   WHERE:                                                          *
*                                                                   *
* M= MULTIPLE    P= DCRS = D,E,F,G    N= 0-9,A-Z     C= A = ADD     *
*    FOR DELETE     RMPS = H,I,J,K    (USE '0' ONLY     C = CHANGE  *
*    FLAGS ONLY     LINE = L,M,N,O     WHEN ELEMENT     P = COPY    *
*                   PTMS = P,Q,R,S     IS BEING         M = MOVE    *
*                   APARS = 0-9        CREATED)         D = DELETE  *
*********************************************************************
  */
EXIT(RECEIVE) MODNAME(MYRECEX) DATASET(SMPE.EXITS.LOAD). /*

            Define exit routine MYRECEX in data set SMPE.EXITS.LOAD
            to get control during SMP/E RECEIVE command processing.
                                                                  */
EXIT(RETRY)   MODNAME(MYRTYEX) DATASET(SMPE.EXITS.LOAD). /*

            Define exit routine MYRTYEX in data set SMPE.EXITS.LOAD
            to get control during SMP/E RETRY processing.
                                                                  */
```

Figure 4. Sample GIMEXITS member provided in SAMPLIB

OPCODE Control Statements

During JCLIN processing, SMP/E scans the SMPJCLIN input, which consists of various job steps calling system utilities. To determine the structure of the target system, SMP/E specifically looks at copy steps, link-edit steps, and assembly steps.

As SMP/E scans inline assembly steps, it looks at each assembler instruction to determine whether the instruction is a macro invocation or an OPCODE. If SMP/E determines that this is a macro invocation, it builds a MAC entry in the target zone and defines the connection between the macro and the assembly in which the macro was found. As a result, when that macro is later changed by the installation of a SYSMOD, SMP/E can cause all the assemblies that used that macro to be redone.

SMP/E uses GIMOPCDE members to determine whether an assembler instruction is a macro invocation or an OPCODE.

SMP/E provides you with a default set of OPCODE definitions that identifies all the known standard assembler OPCODEs. You can define your own members to identify additional OPCODE values or macro names by using the sample GIMOPCDE member SMP/E supplied for you. If you define your own member, you must allocate the SMPPARM data set. You can specify the name of one of these user-defined GIMOPCDE members on the JCLIN command or on the ++JCLIN statement to have SMP/E pick up this additional information. The data from this other GIMOPCDE member is merged with the data from the default set of OPCODE definitions. If duplicate data is specified, the user-specified member has priority.

SMP/E uses the following method to determine whether an assembler instruction is an OPCODE or a macro:

- SMP/E looks for a user-allocated SMPPARM data set.
- If SMPPARM is **not** found, SMP/E uses the default set of OPCODE definitions.

  If SMPPARM is found and there is a user-defined GIMOPCDE member specified on the JCLIN statement or in the ++JCLIN MCS, then SMP/E searches for the specified member in SMPPARM. If it finds that member, it will look first in that member for a definition of the character string.
- If the user-defined GIMOPCDE member specified is not found, SMP/E searches SMPPARM for the GIMOPCDE member. If it finds the GIMOPCDE member, it will look **only** in that member for a definition of the character string. (The GIMOPCDE member, if it exists in SMPPARM, will completely override SMP/E's default set of OPCODE definitions.)
- If the GIMOPCDE member is not found, SMP/E uses the default set of OPCODE definitions.
- If the character string is not defined in either the SMPPARM data set or the default set, SMP/E considers it to be a macro.

For additional information about how SMP/E processes assembler input as JCLIN, see "++JCLIN MCS" on page 45.

Syntax

GIMOPCDE Member Control Statements

```
                  ┌TYPE=OPCODE┐
►►──KEY=name──────┼───────────┼──•──────────────────────────────────────►◄
                  └TYPE=MACRO─┘
```

Operands

KEY
identifies a character string for SMP/E to check for when scanning assembler entries during JCLIN processing, either during the JCLIN command or when applying a SYSMOD with inline JCLIN.

name can be any alphanumeric character string from one to eight characters in length.

TYPE
specifies how SMP/E treats that character string when it is encountered. The following values may be specified:

OPCODE
specifies that SMP/E treats the specified character string as a valid assembler OPCODE.

Note: OPCODE can also be specified as **OP**.

MACRO
indicates that SMP/E treats the specified character string as the name of a macro.

Note: MACRO can also be specified as **MAC**.

Notes:

1. The TYPE operand can be specified only once per control statement.
2. If the TYPE operand is not specified, the default is TYPE=OPCODE.

Usage Notes

- Either a blank or a comma can be used to separate the operands.
- Comments are permitted, subject to the next restriction.
- An OPCODE control statement **cannot** span multiple lines. The complete control statement, including comments, must be contained on a single line.
- If, during JCLIN processing, SMP/E encounters a string specified in one of the OPCODE control statements, and the OPCODE control statement specifies that the string is to be treated as a macro, SMP/E builds a MAC entry in the target zone and connects that MAC entry to the ASSEM entry built for the current assembly. For a further description of JCLIN processing as related to the GIMOPCDE members, see *SMP/E Commands*.

Examples

The following examples are provided to help you use OPCODE statements.

Example 1: Defining a New OPCODE for Special Assemblers

Some licensed programs use a version of the assembler supplied with their product rather than the standard assembler. Often, this assembler recognizes special OPCODEs. When SMP/E is processing JCLIN containing assembler steps that use these OPCODEs, you do not want SMP/E creating target zone macro entries for them. To avoid this situation, create a special GIMOPCDE member containing appropriate control statements to define those OPCODEs to SMP/E.

The following is an example of an GIMOPCDE member containing three control statements to define the three-character strings, *OP1*, *OPCD1*, and *OPCODE01* as special assembler OPCODEs:

```
KEY=OP1         TYPE=OPCODE.
KEY=OPCD1       TYPE=OP.
KEY=OPCODE01    TYPE=OPCODE.
```

Example 2: Overriding an SMP/E-Defined OPCODE

You may provide your own GIMOPCDE member to override SMP/E's default set of OPCODE definitions by using the sample GIMOPCDE member provided for you. This sample member contains a control statement identifying *PUNCH* as a character string that should be treated as an assembler OPCODE. You may have constructed a *PUNCH* macro and now want SMP/E to recognize *PUNCH* as a macro name. This can be done by adding the following control statement to an GIMOPCDE member and then specifying that member on the JCLIN command or ++JCLIN statement:

```
KEY=PUNCH       TYPE=MACRO  /* override type to macro   */.
```

Chapter 4. SMP/E Data Sets and Files

This chapter describes the data sets that are used to process SMP/E commands. These data sets are listed by the ddnames for the data sets required by each SMP/E command. According to the type of data set, you can define it with a DDDEF entry, a DD statement, or with GIMDDALC control statements in SMPPARM member GIMDDALC. For more information on DDDEF entries, see “DDDEF Entry (Distribution, Target, and Global Zone)” on page 177. For more information on SMPPARM member GIMDDALC, see Chapter 3, “Defining Control Statements in SMPPARM Members” on page 113. For more information on dynamic allocation, see *SMP/E User’s Guide*.

CLIENT

ddname Specified by the user.

Use The CLIENT data set contains information about the TCP/IP client environment of the local machine.

Attributes Sequential or member of a partitioned data set; LRECL=80.

Device Direct access.

Note: This data set may reside in the hierarchical file system. Specify **PATHOPTS(ORDONLY)** and either **FILEDATA=BINARY** or **FILEDATA=TEXT** on the DD statement for this data set, if it is to reside in the HFS. If you specify **FILEDATA=BINARY**, each line of input must be padded with blanks to the 80-byte record length (because there is no end of record marker for FILEDATA=BINARY). If you specify **FILEDATA=TEXT**, use the newline character (X'15') to mark the end of each line.

Distribution Library (DLIB)

ddname The ddname for a distribution library should match the low-level qualifier of the data set name. For example, the ddname for SYS1.AMACLIB should be AMACLIB.

Use Distribution libraries (DLIBs) contain updated versions of macros, source, and modules that were shipped by IBM and stored during ACCEPT processing. They are used during system generation to build the target libraries, so you should keep them at a tested functional and service level. They are also used during RESTORE processing to replace elements in the target libraries. You must provide a DDDEF entry or DD statement for each distribution library that is being processed.

Attributes Partitioned.

Device Direct access only.

INFILE

ddname The ddname for an INFILE data set cannot be the same as the ddname for any other data sets used by SMP/E. Other than this, there are no restrictions.

Use The INFILE data set is a sequential data set containing a zone that is to be loaded by the ZONEIMPORT command. The ddname of

© Copyright IBM Corp. 1986, 2002

this sequential data set is specified on the INFILE operand of the ZONEIMPORT command. The zone in the INFILE data set can be used in two ways:

- To recreate a zone that was destroyed
- To recreate a zone on another CSI data set

You must use the ZONEEXPORT command to create the INFILE data set. (This same data set is called the OUTFILE data set when it is created by the ZONEEXPORT command.)

Attributes Sequential; no DCB parameters are required.

If the INFILE data set is on tape, there may be more than one volume for an exported data set. Remember to specify all the volume serial numbers on the INFILE DD statement.

Device Tape or direct access.

Note: BLKSIZE must not exceed 32760.

Link Library (LKLIB)

ddname The ddname for a link library must match the LKLIB value on the element MCS. For example, the ddname for the link library on statement ++MOD(MODA) LKLIB(LIBX) must be LIBX.

Use Link libraries contain replacements for object modules in link-edited format. They are used when the modules are provided in partitioned data sets rather than inline or in relative files.

Attributes Partitioned.

Device Direct access only.

OUTFILE

ddname The ddname for an OUTFILE data set cannot be the same as the ddname for any other data sets used by SMP/E. Other than this, there are no restrictions.

Use The OUTFILE data set is a sequential data set containing a zone copied by the ZONEEXPORT command. The ddname of this sequential data set is specified on the OUTFILE operand. The zone in the OUTFILE data set can be used in two ways:

- As a backup copy, to recreate a zone that was destroyed
- As a transportable copy, to recreate a zone on another CSI data set

You must use the ZONEIMPORT command to process the OUTFILE data set. (This same data set is called the INFILE data set when it is processed by the ZONEIMPORT command.)

Attributes Sequential; no DCB parameters are required.

Device Tape or direct access.

Note: BLKSIZE must not exceed 32760.

SERVER

ddname Specified by the user.

Use The SERVER data set contains information about a TCP/IP connected host running an FTP server.

Attributes Sequential or member of a partitioned data set; LRECL=80.

Device Direct access.

Note: This data set may reside in the hierarchical file system. Specify **PATHOPTS(ORDONLY)** and either **FILEDATA=BINARY** or **FILEDATA=TEXT** on the DD statement for this data set, if it is to reside in the HFS. If you specify **FILEDATA=BINARY**, each line of input must be padded with blanks to the 80-byte record length (because there is no end of record marker for FILEDATA=BINARY). If you specify **FILEDATA=TEXT**, use the newline character (X'15') to mark the end of each line.

SMPCNTL

ddname SMPCNTL.

Use The SMPCNTL data set contains the SMP/E commands to be processed.

Attributes Sequential; LRECL=80, BLKSIZE=multiple of 80, RECFM=FB.

Device Card, tape, direct access, or terminal.

Notes:

1. BLKSIZE must not exceed 32760.
2. This data set may reside in the hierarchical file system. Specify **PATHOPTS(ORDONLY)** and either **FILEDATA=BINARY** or **FILEDATA=TEXT** on the DD statement for this data set, if it is to reside in the HFS. If you specify **FILEDATA=BINARY**, each line of input must be padded with blanks to the 80-byte record length (because there is no end of record marker for FILEDATA=BINARY). If you specify **FILEDATA=TEXT**, use the newline character (X'15') to mark the end of each line.

SMPCSI

ddname SMPCSI.

Use The data set specified by the ddname SMPCSI is the CSI containing the global zone. (This data set is also known as the master CSI.) The CSI is the database used by SMP/E to record status and other information about the various target and distribution libraries being supported.

Attributes VSAM; RECORDSIZE(24 143), KEYS(24 0).

Device Direct access only.

Notes:

1. The low-level qualifier of the data set name must be **CSI**.
2. If you have used IBM SMP/E for z/OS and OS/390, V3R1 to update a CSI data set, you might not be able to process that data set with previous releases of SMP/E. For more information, see the “Migration” section of *SMP/E User’s Guide*.

3. When running on systems with the required level of Data Facility Product (DFP), SMP/E automatically takes advantage of the local shared resource (LSR) feature of VSAM. This reduces the number of times SMP/E must access data when it is reading CSI data sets. As a result, SMP/E performance is improved for commands such as APPLY, APPLY CHECK, ACCEPT, ACCEPT CHECK, and especially LIST.
4. CSI data sets should usually be allocated dynamically. However, you may want to use the batch local shared resources (BLSR) subsystem with expanded storage hiperspaces (instead of SMP/E's implementation of LSR) to improve SMP/E performance during APPLY and ACCEPT processing for a large number of changes.

   To do this, you use JCL statements instead of dynamic allocation to define the CSI data sets containing the zones required for processing. For each CSI data set, you need to provide two DD statements:

   - The first DD statement is used by SMP/E to enqueue on the data set (to protect it from simultaneous updates) and to trigger batch LSR. This DD statement uses the DDNAME parameter to point to the second DD statement.
   - The second DD statement is used by batch LSR to open the CSI data set.

   Both DD statements must specify the same DSN value. The following example shows how this can be done:

```
//SMPCSI    DD DSN=dataset1.CSI,DISP=SHR,
//          SUBSYS=(BLSR,'DDNAME=MYSMPCSI',
//          'HBUFND=value','HBUFNI=value')
//MYSMPCSI  DD  DSN=dataset1.CSI,DISP=SHR
//*
//tgtzone   DD  DSN=dataset2.CSI,DISP=SHR,
//          SUBSYS=(BLSR,'DDNAME=MYTGT1',
//          'HBUFND=value','HBUFNI=value')
//MYTGT1    DD  DSN=dataset2.CSI,DISP=SHR
```

   In this example, note that:

   - If the target zone and global zone exist in the same CSI, *dataset1* and *dataset2* refer to the same data set.
   - HBUFND and HBUFNI are used instead of BUFND and BUFNI to indicate the use of hiperspace in expanded storage (if available).
   - *tgtzone* is the name of the target zone specified on the SET BDY command to be processed.
   - The DSN parameter must be specified on all DD statements to ensure internal enqueue protection.
5. For more information about using the EXEC statement to specify the CSI data set containing the global zone, see *SMP/E User's Guide*.
6. For information about the target and distribution zones in a CSI data set, see "Zone Statement" on page 150.

SMPDATA1

ddname SMPDATA1.

Use The SMPDATA1 data set is used to store library change file records. The library change file records are written by SMP/E during APPLY or RESTORE processing when the CHANGEFILE subentry

of the OPTIONS entry is set to YES. For more information on library change file records, see Chapter 8, “Library Change File Records”.

Attributes Sequential; BLKSIZE=1069–32670, RECFM=VB, DISP=MOD.

- To have the system determine the optimal block size for the data set, specify BLKSIZE=0.
- If you specify a non-zero BLKSIZE that is less than 1069, SMP/E uses a default of 8800.
- **DISP=MOD** must be specified to maintain a cumulative history of SMP/E ‘delta’ processing.
- If a **DISP** other than **MOD** is specified by the user, SMP/E uses it.
- SMP/E uses LRECL=1065 in allocating the SMPDATA1 data set.

Device Direct access only.

Notes:

1. The SMPDATA1 data set can only be defined to SMP/E with a DD statement or a DDDEF.
2. The SMPDATA1 DD statement or DDDEF must be defined to each target zone to enable ‘delta’ processing to occur for that target zone.
3. Do not concatenate SMPDATA1 data sets.
4. Do not allocate the SMPDATA1 data set as a path in the hierarchical file system.

The SMPDATA1 DDDEF can also be defined with the SMP/E Administration dialogs.

SMPDATA2

ddname SMPDATA2.

Use The SMPDATA2 data set is used to store the library change file records when the SMPDATA1 data set becomes full. This type of processing is called *spill processing*. The library change records are written by SMP/E during APPLY or RESTORE processing. For more information on library change file records, see Chapter 8, “Library Change File Records”.

Attributes Sequential; BLKSIZE=1069–32760, RECFM=VB, DISP=MOD.

- To have the system determine the optimal block size for the data set, specify BLKSIZE=0.
- If you specify a non-zero BLKSIZE that is less than 1069, SMP/E uses a default of 8800.
- **DISP=MOD** must be specified.
- If a **DISP** other than **MOD** is specified, SMP/E will use it.
- SMP/E will use LRECL=1065 in allocating the SMPDATA2 data set.

Device Direct access only.

Notes:

1. The SMPDATA2 data set can only be defined to SMP/E with a DD statement or a DDDEF.

2. The SMPDATA2 DD statement or DDDEF must be defined to each target zone to enable spill processing to occur for that target zone.
3. Do not concatenate SMPDATA2 data sets.
4. Do not allocate the SMPDATA2 data set as a path in the hierarchical file system.
5. The size of the SMPDATA2 data set will vary depending on how the user intends to manage it.
6. As is the case with SMPLOG data set, the user is responsible for managing the contents and space.

The SMPDATA2 DDDEF can also be defined with the SMP/E Administration dialogs.

SMPDEBUG

ddname SMPDEBUG.

Use The SMPDEBUG data set contains a dump that was requested by the DEBUG command. Depending on the operands specified, it may contain (1) a dump of SMP/E control blocks and storage areas associated with the specified dump points, or (2) a dump of the VSAM RPL control block and additional RPL information for the specified SMP/E function.

Attributes Sequential; LRECL=121, BLKSIZE=multiple of 121, RECFM=FBA, DISP=MOD.

Device SYSOUT, printer, direct access, tape, or terminal.

Notes:

1. BLKSIZE must not exceed 32760.
2. This data set may reside in the hierarchical file system. Specify **FILEDATA=TEXT** and **PATHOPTS(OWRONLY,OAPPEND)** on the DD statement for this data set, if it is to reside in the HFS.

SMPDIR

ddname SMPDIR.

Use The SMPDIR directory identifies the name of a path to be allocated in the hierarchical file system. The name is not a complete pathname; it is the directory under which the files produced by GIMZIP are stored.

Attributes Existing directory within the hierarchical file system.

Device Direct access.

Notes:

1. The SMPDIR directory must be defined with a DD statement.
2. The SMPDIR directory must be defined as a directory in the hierarchical file system.
3. The size of the SMPDIR directory depends on the size of the package files produced by GIMZIP.

SMPHOLD

ddname SMPHOLD.

This may refer to an actual data set, or it may refer to a file on a tape (such as file 4 on an ESO tape).

Use SMPHOLD contains ++HOLD and ++RELEASE statements to be processed by the RECEIVE command.

Attributes Sequential; LRECL=80, BLKSIZE=multiple of 80, RECFM=FB.

Device Direct access or tape.

Notes:

1. BLKSIZE must not exceed 32760.
2. This data set may reside in the hierarchical file system. Specify **PATHOPTS(ORDONLY)** and either **FILEDATA=BINARY** or **FILEDATA=TEXT** on the DD statement for this data set, if it is to reside in the HFS. If you specify **FILEDATA=BINARY**, each line of input must be padded with blanks to the 80-byte record length (because there is no end of record marker for FILEDATA=BINARY). If you specify **FILEDATA=TEXT**, use the newline character (X'15') to mark the end of each line.

SMPJCLIN

ddname SMPJCLIN.

Use The SMPJCLIN data set contains a job stream of assembly, link-edit, and copy job steps. This data is typically the stage 1 output from the most recent full or partial system generation, but it may be other data in a similar format, such as output from the SMP/E GENERATE command. This job stream is used as input to the JCLIN command to update or create entries in a target zone.

Attributes Sequential; LRECL=80, BLKSIZE=multiple of 80, RECFM=FB.

Device Card, tape, direct access, or terminal.

Notes:

1. BLKSIZE must not exceed 32760.
2. This data set may reside in the hierarchical file system. Specify **PATHOPTS(ORDONLY)** and either **FILEDATA=BINARY** or **FILEDATA=TEXT** on the DD statement for this data set, if it is to reside in the HFS. If you specify **FILEDATA=BINARY**, each line of input must be padded with blanks to the 80-byte record length (because there is no end of record marker for FILEDATA=BINARY). If you specify **FILEDATA=TEXT**, use the newline character (X'15') to mark the end of each line.

SMPLIST

ddname SMPLIST.

Use The SMPLIST data set contains the output of all LIST commands.

Attributes Sequential; LRECL=121, BLKSIZE=multiple of 121, RECFM=FBA, DISP=MOD.

Device SYSOUT, printer, direct access, tape, or terminal.

Notes:

1. BLKSIZE must not exceed 32760.
2. If SMPLIST is not defined, all LIST output goes to the SMPOUT data set.
3. If SMPLIST is allocated to a data set, the disposition must be MOD, because SMP/E opens and closes the SMPLIST DD statement at each SET command. If the disposition is SHR or OLD, SMPLIST contains only the output from the last set of commands processed before the end of SMP/E processing.
4. This data set may reside in the hierarchical file system. Specify **FILEDATA=TEXT** and **PATHOPTS(OWRONLY,OAPPEND)** on the DD statement for this data set, if it is to reside in the HFS. If OAPPEND is not specified, SMPLIST contains only the output from the last set of commands processed before the end of SMP/E processing.

SMPLOG

ddname SMPLOG.

Use The SMPLOG data set (LOG) contains time-stamped records of SMP/E processing. The records in this data set can be written automatically by SMP/E or added by the user through the LOG command. The data set also contains messages issued by SMP/E, as well as detailed information about data set allocation.

Attributes Sequential; BLKSIZE=514-32000, RECFM=VB, DISP=MOD.

- The BLKSIZE value determines how many records are written to the LOG at one time. As a block is filled, it is written to SMPLOG.

  If BLKSIZE is less than 514, SMP/E uses the default of 3200.
- **DISP=MOD** must be specified to maintain a cumulative history of SMP/E processing.
- SMP/E uses LRECL=510 in allocating the SMPLOG data set.

Device Tape or direct access.

Notes:

1. **Important:** If the data set allocated to the SMPLOG DD statement has the wrong data set attributes, SMP/E will open the data set for output processing with acceptable attributes. This action will overlay the contents of the data set.
2. Each zone should have its own SMPLOG data set.
3. A secondary log data set (SMPLOGA) should be defined to hold log data when the SMPLOG data set is full. Otherwise, the extra log data is written to the SMPOUT data set, with the date and time stamp encrypted.
4. SMPLOG should be updated only by the LOG command or by processing for other SMP/E commands.
5. Because some messages are longer than in earlier releases of SMP/E, you may need to increase the size of any data sets used for SMP/E messages (such as SMPOUT). How much more space you need depends on the current size of these data sets and which messages are issued. To start, you may want to allocate new data sets twice the size of the old ones.

SMPLOGA

ddname SMPLOGA.

Use SMPLOGA is a backup LOG data set. If SMPLOGA is defined, it is

used automatically when the SMPLOG data set is full. The LOG data set contains time-stamped records of SMP/E processing. The records in this data set can be written automatically by SMP/E or added by the user through the LOG command. The data set also contains messages issued by SMP/E, as well as detailed information about data set allocation.

Attributes Sequential; BLKSIZE=514-32000, RECFM=VB, DISP=MOD.

- The BLKSIZE value determines how many records are written to the LOG at one time. As a block is filled, it is written to SMPLOG.

  If BLKSIZE is less than 514, SMP/E uses the BLKSIZE in effect for the SMPLOG data set.

  The BLKSIZE for the SMPLOGA data set must match the BLKSIZE for the related SMPLOG data set.
- **DISP=MOD** must be specified to maintain a cumulative history of SMP/E processing.
- SMP/E uses LRECL=510 in allocating the SMPLOGA data set.

Device Tape or direct access.

Notes:

1. **Important:** If the data set allocated to the SMPLOGA DD statement has the wrong data set attributes, SMP/E will open the data set for output processing with acceptable attributes. This action will overlay the contents of the data set.
2. Each zone should have its own SMPLOGA data set.
3. If the SMPLOGA data set is full, the extra log data is written to the SMPOUT data set, with the date and time stamp encrypted.
4. SMPLOGA should be updated only by the LOG command or by processing for other SMP/E commands.
5. Because some messages are longer than in earlier releases of SMP/E, you may need to increase the size of any data sets used for SMP/E messages (such as SMPOUT). How much more space you need depends on the current size of these data sets and which messages are issued. To start, you may want to allocate new data sets twice the size of the old ones.

SMPLTS

ddname SMPLTS.

Use The SMPLTS data set is a target library used to maintain the base versions of load modules and program objects for which SYSLIB allocations have been specified. A base version of each load module or program object includes only the modules that were explicitly defined for it by SMP/E MCS statements and JCLIN. Other modules that might be implicitly included in the execution-time load modules and program objects when they are bound are not stored in the base version copy in the SMPLTS.

Load modules and program objects are maintained in the SMPLTS when they are defined to SMP/E with CALLLIBS and the JCLIN specifies SYSLIB allocations (which are used to create the CALLLIBS subentry lists in the corresponding LMOD entries). SMP/E uses the load modules and program objects in the SMPLTS as input when binding the execution-time load modules and program objects into their specified target libraries.

Attributes Partitioned (DSNTYPE=PDS or DSNTYPE=LIBRARY); RECFM=U, DISP=OLD, BLKSIZE greater than or equal to 6144.

If you allocate the SMPLTS as a PDS, IBM recommends a block size of 32760 to minimize the use of DASD space for this data set.

Device Direct access only.

Notes:

1. Each target zone must have its own SMPLTS data set that is not shared by any other target zone.
2. The SMPLTS data set is required for APPLY, LINK, and RESTORE processing.
3. The BLKSIZE of the SMPLTS data set needs to be 1024 or greater to support load modules that specify the SCTR attribute. A large BLKSIZE is recommended to provide maximum space efficiency.
4. The SMPLTS data set is eligible for RETRY processing, in the same manner as other target libraries, after an *x*37 ABEND. The size of an SMPLTS data set varies depending on the number of load modules that specify a CALLLIBS subentry list in the target zone associated with the SMPLTS.

SMPMTS

ddname SMPMTS.

Use The SMPMTS data set (MTS) is a target library for macros that exist only in a distribution library (such as macros in SYS1.AMODGEN). This data set allows the current version of these macros to be used for assemblies during APPLY processing. For more information about MTS entries, see “MTSMAC Entry (SMPMTS)” on page 263.

Attributes Partitioned; LRECL=80, BLKSIZE=multiple of 80, RECFM=FB, DISP=OLD.

Device Direct access only.

Notes:

1. Each target zone must have its own SMPMTS data set that is not shared by any other target zone. This SMPMTS data set may be used with the related distribution zone.
2. For APPLY processing, the SMPMTS data set must be allocated with enough space to hold all the system generation macros, as well as any other macros that do not reside in a target library. This is because functions are now packaged with a complete set of system generation macros.
3. The SMPMTS data set **must** be in the SYSLIB concatenation for APPLY and RESTORE processing. It can be in the SYSLIB concatenation for ACCEPT processing. For information on SYSLIB concatenation requirements, see *SMP/E User’s Guide*.

SMPNTS

ddname

SMPNTS.

Use

The SMPNTS (SMP/E Network Temporary Store) is a directory of hierarchical file system files that are used for temporary storage of network transported packages that were received during SMP/E RECEIVE processing.

Attributes

Existing directory within the hierarchical file system. The hierarchical file system directory name is concatenated with the appropriate subdirectories and file names to create complete pathnames.

- The directory name can be from 1 to 255 characters.
- The directory name must begin and end with a slash (/).
- In addition to the required delimiters (/), a directory name must also be enclosed in single apostrophes (') if any of the following is true:
  - The directory name contains lowercase alphabetic characters
  - The directory name contains a character that is not uppercase alphabetic, numeric, or national ($, #, or @), slash (/), plus (+), hyphen, period, or ampersand (&).
- The apostrophes must be outside the required delimiters, as in '/directory name/', not /'directory name'/.
- The single apostrophes used to enclose the directory name (the delimiters) do not count as part of the 255-character limit.
- Any apostrophes specified as part of the directory (not the delimiters) must be doubled.

  Double apostrophes count as two characters in the 255-character limit.
- The directory name can include characters through X'40' and X'FE'.
- Do not use symbolic substitution.

Device

Direct access only.

Notes:

1. The SMPNTS can be defined to SMP/E only with a DD statement or a DDDEF.
2. Do not allocate the SMPNTS as anything other than a directory in the hierarchical file system.
3. The size of the SMPNTS directory depends on the size of the packages received from the network and stored there.

SMPOBJ

ddname SMPOBJ.

Use The SMPOBJ data set is used primarily for source-maintained products. It contains preassembled modules that can be used instead of reassembling those modules. These modules must be in load module format—that is, in the same format as modules residing in the distribution library.

Attributes Partitioned; RECFM=U, DISP=SHR.

SMPOBJ

Device Direct access only.

SMPOUT

ddname SMPOUT.

Use The SMPOUT data set contains messages issued during SMP/E processing, as well as dumps of the VSAM RPL, if any dumps were taken. It may also contain LIST output and reports if the SMPLIST and SMPRPT data sets are not defined.

Attributes Sequential; LRECL=121, BLKSIZE=multiple of 121, RECFM=FBA, DISP=MOD.

Device SYSOUT, printer, direct access, tape, or terminal.

Notes:

1. BLKSIZE must not exceed 32760.
2. If SMPOUT is allocated to a data set, the disposition must be MOD, because SMP/E opens and closes the SMPOUT DD statement at each SET command. If the disposition is SHR or OLD, SMPOUT contains only the output from the last set of commands processed before the end of SMP/E processing.
3. Because some messages are longer than in earlier releases of SMP/E, you may need to increase the size of any data sets used for SMP/E messages (such as SMPOUT). How much more space you need depends on the current size of these data sets and which messages are issued. To start, you may want to allocate new data sets twice the size of the old ones.
4. This data set may reside in the hierarchical file system. Specify **FILEDATA=TEXT** and **PATHOPTS(OWRONLY,OAPPEND)** on the DD statement for this data set, if it is to reside in the HFS. If OAPPEND is not specified, SMPOUT contains only the output from the last set of commands processed before the end of SMP/E processing.

SMPPARM

ddname SMPPARM.

Use The SMPPARM data set contains members that allow you to customize SMP/E as follows:

Member name	Use
GIMDDALC	Defines data sets to be dynamically allocated
GIMEXITS	Defines exit routines
GIMOPCDE	Defines macro and assembler operation codes

Note: The File Allocation Reports for the APPLY and ACCEPT commands include status information for the SMPPARM data set, even if an SMPPARM data set is not allocated. SMP/E does this as a reminder to users who may have intended to supply one or more SMPPARM members. If you do not intend to supply any SMPPARM members, you may ignore this status information for the SMPPARM data set.

- For the GIMDDALC member:

  During SET processing, SMP/E determines whether SMPPARM member GIMDDALC was provided. If so, it processes the GIMDDALC control statements contained within the member. For

more information about GIMDDALC members, see Chapter 3, “Defining Control Statements in SMPPARM Members” on page 113.

- For the GIMEXITS member:

  During RECEIVE, APPLY, ACCEPT, RESTORE and LINK processing, SMP/E will determine if SMPPARM member GIMEXITS has been provided. If so, it will process the EXITS control statements contained within the member. For more information about GIMEXITS members, see Chapter 3, “Defining Control Statements in SMPPARM Members” on page 113.

- For the GIMOPCDE member:

  During JCLIN processing, SMP/E determines whether assembler instructions are macro invocations or OPCODEs. SMP/E contains a default set of OPCODE definitions, which identify standard assembler OPCODEs. If you do not want to use this default set, you can define your own by using the sample GIMOPCDE member supplied to you. For more information about GIMOPCDE members, see Chapter 3, “Defining Control Statements in SMPPARM Members” on page 113.

Attributes Partitioned; LRECL=80, BLKSIZE=multiple of 80, RECFM=FB.

Device Direct access only.

SMPPTFIN

ddname SMPPTFIN.

This ddname can refer to an actual data set or to a file on a tape (such as file 1 on an ESO tape).

Use The SMPPTFIN data set contains SYSMODs and ++ASSIGN statements to be processed by the RECEIVE command.

Attributes Sequential; LRECL=80, BLKSIZE=multiple of 80, RECFM=FB.

Device Card, tape, direct access, or terminal.

Notes:

1. BLKSIZE must not exceed 32760.
2. If the SMPPTFIN data set is inline, you must make sure that the combination of characters used for the delimiter does not occur in the input itself.

   For example, if **DD *** is specified for SYSIN and the SMPPTFIN data set contains the characters **$$**, then **$$** cannot be used as the default delimiter for the input or for the delimiter specified on the DLM parameter. (The output of SMP/E service routine GIMDTS contains the characters **$$**.)
3. If you want to receive from multiple product tapes, you cannot concatenate them on a single SMPPTFIN DD statement. Instead, you must process each tape in a separate step, using separate SMPPTFIN DD statements.

   Refer to the documentation supplied with the tape for exact information on how to code the SMPPTFIN DD statement. For example, with a product tape, the program directory contains this information.
4. This data set may reside in the hierarchical file system. Specify **PATHOPTS(ORDONLY)** and either **FILEDATA=BINARY** or **FILEDATA=TEXT** on the DD statement for this data set, if it is to reside in the HFS. If you specify **FILEDATA=BINARY**, each line of input must be padded with blanks to the 80-byte record length (because there is no end of record marker for

FILEDATA=BINARY). If you specify **FILEDATA=TEXT**, use the newline character (X'15') to mark the end of each line.

SMPPTS

ddname SMPPTS.

Use The SMPPTS data set (PTS) is used as a repository for SYSMODs. It contains one member for each SYSMOD that was received. Each member is called an MCS entry and is an exact copy of the SYSMOD as it was received from the SMPPTFIN data set. The name of an MCS entry matches the SYSMOD ID of the SYSMOD it contains. For more information, see "MCS Entry (SMPPTS)" on page 246.

Note: SYSMODs in the SMPPTS data set may be stored by SMP/E in a compact format. Specifically, inline element data within SYSMODs may be compacted during RECEIVE or GZONEMERGE command processing. This compact format helps to reduce the space requirements of the SMPPTS data set. The compacted data is automatically expanded when needed during APPLY and ACCEPT command processing. See the description of the COMPACT subentry in "OPTIONS Entry (Global Zone)" on page 265 for information on how to specify whether SYSMODs should be compacted.

To view the original uncompacted form of any SYSMOD in the SMPPTS data set, you can use the SMP/E Query Dialogs to display the MCS entry in the Global zone for a SYSMOD. You can also use the GIMCPTS service routine to expand one or more compacted SYSMODs (see "GIMCPTS: SYSMOD Compaction Service Routine" on page 413 for more information on GIMCPTS).

Attributes Partitioned; LRECL=80, BLKSIZE=multiple of 80, RECFM=FB, DISP=OLD.

It is recommended that SMPPTS be allocated as a PDSE (DSNTYPE=LIBRARY).

If you plan to run concurrent jobs, specify **DISP=SHR** instead of **DISP=OLD**.

Unless SMPPTS spill data sets are defined, the SMPPTS must be large enough to contain all the SYSMODs that are to be received from the SMPPTFIN data set.

Do not concatenate SMPPTS data sets. If you need multiple data sets for the SMPPTS, use SMPPTS spill data sets.

You **must** specify a valid data set name for the SMPPTS. **NULLFILE** and **DD DUMMY** are invalid for the SMPPTS.

Device Direct access only.

SMPPTS Spill Data Set

ddname SMPPTS1 through SMPPTS99.

Use SMPPTS spill data sets can be used to store SYSMODs when the

SMPPTS data set becomes full. This type of processing is called *spill processing*. SMPPTS spill data sets are used by SMP/E in the same way as the primary SMPPTS data set is used. For more information, see “SMPPTS” on page 138.

Attributes Partitioned; LRECL=80, BLKSIZE=multiple of 80, RECFM=FB, DISP=OLD.

It is recommended that SMPPTS spill data sets be allocated as a PDSE (DSNTYPE=LIBRARY).

If you plan to run concurrent jobs, specify **DISP=SHR** instead of **DISP=OLD**.

Do not concatenate SMPPTS spill data sets.

The first SMPPTS spill data set must be specified with a ddname of **SMPPTS1**, the second **SMPPTS2**, and so on, up to a maximum of **SMPPTS99**. Do not skip any ddnames in this sequence; if a spill data set is omitted, SMP/E ignores any data sets that may follow the omitted data set. (For example, if you specify only **SMPPTS1** and **SMPPTS3**, then SMP/E uses only **SMPPTS1** and ignores **SMPPTS3**.)

You **must** specify a valid data set name for an SMPPTS data set. **NULLFILE** and **DD DUMMY** are invalid for SMPPTS spill data sets.

Device Direct access only.

SMPPUNCH

ddname SMPPUNCH.

Use The SMPPUNCH data set contains output from various SMP/E commands. This output generally consists of commands or control statements.

- For GENERATE, it contains a job stream for building target libraries.
- For REPORT CROSSZONE, it contains commands for installing cross-zone requisites.
- For REPORT ERRSYSMODS, it contains commands for installing SYSMODs that resolve the error hold reason IDs for exception SYSMODs.
- For REPORT SOURCEID, it contains commands for listing SYSMODs associated with the source IDs that were found in the specified zones.
- For REPORT SYSMODS, it contains commands for installing SYSMODs from the input zone that are applicable to the comparison zone.
- For UNLOAD, it contains UCLIN statements for recreating the entries that were unloaded.

Attributes Sequential; LRECL=80, BLKSIZE=multiple of 80, RECFM=FB, DISP=MOD.

Device Card, tape, or direct access.

Notes:

1. BLKSIZE must not exceed 32760.

2. If SMPPUNCH is allocated to a data set, the disposition must be MOD, because SMP/E opens and closes the SMPPUNCH DD statement at each SET command. If the disposition is SHR or OLD, SMPPUNCH contains only the output from the last set of commands processed before the end of SMP/E processing.
3. For the UNLOAD command, SMPPUNCH should be allocated to a direct access data set or to tape, because the volume of output is large. You may also want a large BLKSIZE; the larger the BLKSIZE, the fewer the times SMP/E must do I/O.
4. This data set may reside in the hierarchical file system. Specify **FILEDATA=TEXT** and **PATHOPTS(OWRONLY,OAPPEND)** on the DD statement for this data set, if it is to reside in the HFS. If OAPPEND is not specified, SMPPUNCH contains only the output from the last set of commands processed before the end of SMP/E processing.

SMPRPT

ddname SMPRPT.

Use The SMPRPT data set contains the reports produced during SMP/E processing.

Attributes Sequential; LRECL=121, BLKSIZE=multiple of 121, RECFM=FBA, DISP=MOD.

Device SYSOUT, printer, direct access, tape, or terminal.

Notes:

1. BLKSIZE must not exceed 32760.
2. If SMPRPT is not defined, all report output goes to the SMPOUT data set.
3. If SMPRPT is allocated to a data set, the disposition must be MOD, because SMP/E opens and closes the SMPRPT DD statement at each SET command. If the disposition is SHR or OLD, SMPRPT contains only the reports from the last set of commands processed before the end of SMP/E processing.
4. This data set may reside in the hierarchical file system. Specify **FILEDATA=TEXT** and **PATHOPTS(OWRONLY,OAPPEND)** on the DD statement for this data set, if it is to reside in the HFS. If OAPPEND is not specified, SMPRPT contains only the reports from the last set of commands processed before the end of SMP/E processing.

SMPSCDS

ddname SMPSCDS.

Use The SMPSCDS data set (SCDS) contains backup copies of target zone entries that are created during APPLY processing. These backup copies are made before the entries are (1) changed by inline JCLIN, a ++MOVE MCS, or a ++RENAME MCS, or (2) deleted by an element MCS with the DELETE operand. The backup copies are used during RESTORE processing to return the entries to the way they were before APPLY processing. For more information about BACKUP entries, see “BACKUP Entries (SMPSCDS)” on page 168.

Attributes Partitioned; LRECL=80, BLKSIZE=multiple of 80, RECFM=FB, DISP=OLD.

Device Direct access only.

Note: Each target zone must have its own SMPSCDS data set; that data set must be unique to that target zone. This SMPSCDS data set must also be used with the related distribution zone.

SMPSNAP

ddname SMPSNAP.

Use The SMPSNAP data set is used for snap dump output. When a severe error occurs, such as an abend or severe VSAM return code, SMP/E requests a snap dump of its storage before doing any error recovery. In addition, the DEBUG command may request a snap dump of SMP/E storage when specified messages are issued, or it may request a snap dump of control blocks and storage areas associated with a specified dump point.

Attributes Sequential.

Device SYSOUT, printer, direct access, tape, or terminal.

Note: BLKSIZE must not exceed 32760.

SMPSTS

ddname SMPSTS.

Use The SMPSTS data set (STS) is a target library for source that exists only in a distribution library. This data set allows the current version of these modules to be used for assemblies during APPLY processing.

Attributes Partitioned; LRECL=80, BLKSIZE=multiple of 80, RECFM=FB, DISP=OLD.

Device Direct access only.

Note: Each target zone must have its own SMPSTS data set, which may not be shared by any other target zone. This SMPSTS data set can also be used with the related distribution zone.

SMPTLIB

ddname SMPTLIB.

Use SMPTLIB data sets (TLIBs) are used as temporary storage for relative files that are loaded from SMPPTFIN during RECEIVE processing. They are deleted when the associated SYSMOD is deleted by REJECT, RESTORE, or ACCEPT processing.

You can have SMP/E dynamically allocate the TLIB data sets, or you can allocate them yourself before RECEIVE processing. For information about how SMP/E allocates the TLIBs, see the RECEIVE Command chapter in the *SMP/E Commands* manual. (Regardless of how the SMPTLIB data sets are allocated, they do not appear in the File Allocation report.)

Notes:

1. No DD statement or DDDEF entry is required for the SMPTLIB data sets if they are preallocated and cataloged.

2. If you allocate and catalog the SMPTLIB data sets yourself, make sure they are allocated on the volume specified in the catalog.
3. If you allocate the SMPTLIB data sets yourself but do not catalog them, make sure they are allocated on the volume specified in the SMPTLIB DD statement or DDDEF entry being used for the command you are processing.
4. If you need to specify a unit that is not in SYSALLDA, and the unit is not set by use of a DATACLAS or DATACLAS filter routine, you must use a DDDEF entry instead of a DD statement to allocate the SMPTLIB data sets.
5. If you are using SMS to manage your data sets, you can set up the unit, volume, and space allocation through a DATACLAS or DATACLAS filter routine instead of specifying them on a DD statement or DDDEF entry.
6. If you are using SMS to manage your data sets, do not specify dummy volumes on a DD statement or in a DDDEF entry for the SMPTLIB allocation. Dummy volumes used as indicators to ACS routines for SMS class selection can cause operator mount messages to be issued for the non-existent dummy volumes. This is because SMP/E first attempts to allocate the SMPTLIB data sets as if they already exist on the volume, which can cause operator mount messages to be issued for the dummy volume.
7. SMPTLIB data sets should not be allocated as PDSEs, because IEBCOPY does not support copying an unloaded PDS load library from tape to a PDSE load library on DASD.
8. DDDEFs are not required in target or distribution zones for SMPTLIB data sets, unless you have uncataloged the SMPTLIB data sets from the global zone (this is not recommended). In this case, only the VOLUME and UNIT subentries are accepted as input on UCLIN statements for target or distribution zone SMPTLIB DDDEFs.

Attributes Partitioned.

If you are using MSS volumes, the UNIT parameter must specify either the number of volumes, the unit count, or P (meaning one unit per volume specified).

Here are two examples of SMPTLIB DD statements:

```
//SMPTLIB  DD UNIT=3350,VOL=SER=335001
```

```
//SMPTLIB DD UNIT=3350,
//          VOL=SER=(335001,335002)
```

If you use DDDEFs to have SMP/E dynamically allocate the SMPTLIB data sets, you cannot specify the initial or final disposition. SMP/E determines the disposition based on the command it is processing. Table 6 on page 143 shows these commands and the dispositions used.

Device Direct access only.

Table 6. Possible Dispositions for SMPTLIB Data Sets

Command	Conditions	Disposition
ACCEPT	**NOPURGE** is not specified in the OPTIONS entry that is in effect.	(OLD,DELETE)
	NOPURGE is specified in the OPTIONS entry that is in effect.	(SHR,KEEP)
APPLY	–	(SHR,KEEP)
RECEIVE	SMPTLIBs are neither preallocated nor cataloged.	(NEW,CATALOG)
	SMPTLIBs are preallocated and may or may not be cataloged.	(OLD,CATALOG)
REJECT	–	(OLD,DELETE)
RESTORE	**NOREJECT** is not specified in the OPTIONS entry that is in effect.	(OLD,DELETE)
	NOREJECT is specified in the OPTIONS entry that is in effect.	(OLD,KEEP)

SMPTLOAD

ddname SMPTLOAD.

Use SMP/E may need to use an SMPTLOAD data set when installing program elements that were packaged inline. SMPTLOAD is required when applying or accepting a program element and either:

- the destination data set (target or distribution library) is a PDS and the unloaded inline data represents a PDSE that contains program elements
- the destination data set is a PDSE and the unloaded inline data set has RECFM=U and is not a PDSE.

SMP/E dynamically allocates a new SMPTLOAD data set whenever one is needed.

Attributes Partitioned (DSNTYPE=PDS or DSNTYPE=LIBRARY), DISP=(NEW,DELETE).

Device Direct access.

Notes:

1. If the unloaded inline data represents a PDSE, SMP/E allocates SMPTLOAD with DSNTYPE=LIBRARY. Otherwise, SMP/E allocates SMPTLOAD with DSNTYPE=PDS.
2. All other allocation information for the SMPTLOAD is obtained from the SMPTLOAD DDDEF or, if a DDDEF does not exist, from GIMDDALC control statements found in SMPPARM member GIMDDALC. If a DD statement is supplied for SMPTLOAD, it is freed and the allocation for SMPTLOAD is done using the DDDEF or the GIMDDALC control statement found in SMPPARM member GIMDDALC.

   SMP/E uses the following information, if it is supplied by the user, to dynamically allocate an SMPTLOAD data set:

   - Primary and secondary space amounts
   - Allocation units for primary and secondary space
   - Number of directory blocks

- A unit designation
- A volume designation
- A STORCLAS designation
- A MGMTCLAS designation
- A DATACLAS designation

If SMP/E cannot get the required allocation information from a DDDEF or a GIMDDALC control statement in the GIMDDALC member of SMPPARM, then the allocation fails.

3. If there is an SMPTLOAD DDDEF, SMP/E tries to allocate the SMPTLOAD data set, even if the DDDEF does not supply any of the previously listed information. This is because SMP/E always tries to allocate the SMPTLOAD data set new with either a DSNTYPE of PDS or LIBRARY, which may be sufficient if an ACS routine exists to supply other needed allocation values.
4. SMPTLOAD does not appear in the File Allocation Report.
5. SMP/E will not use an SMPTLOAD data set specified with JCL. If an SMPTLOAD DD statement is specified, SMP/E dynamically frees the SMPTLOAD ddname prior to allocating a new SMPTLOAD data set.

SMPWRK1

ddname SMPWRK1.

Use The SMPWRK1 data set is used as temporary storage for macro updates and replacements that will be processed by the IEBUPDTE and IEBCOPY programs. During APPLY and ACCEPT processing, SMP/E places the input in this data set before calling the utility.

Attributes Partitioned; LRECL=80, BLKSIZE=multiple of 80, RECFM=FB, DISP=(NEW,DELETE).

Specifying **DISP=(NEW,DELETE)** minimizes space loss problems. SMPWRK1 is generally needed only for the duration of the SMP/E job step. To keep the data set longer than that, you must use a different DISP value and compress the data set to reclaim space.

The SMS-related options DATACLAS, MGMTCLAS, STORCLAS, and DSNTYPE provide additional data set support. For more information, refer to *z/OS DFSMS: Using Data Sets*.

Device Direct access only.

Notes:

1. BLKSIZE must not exceed 32760.
2. Do not specify BLKSIZE=0. SMP/E does not support system-determined block size (SDB) for this data set.
3. If the BLKSIZE value is omitted or invalid, SMP/E uses a default of 3200.

SMPWRK2

ddname SMPWRK2.

Use The SMPWRK2 data set is used as temporary storage for source updates and source replacements that will be processed by the IEBUPDTE and IEBCOPY programs. During APPLY and ACCEPT processing, SMP/E places the input in this data set before calling the utility.

Attributes Partitioned; LRECL=80, BLKSIZE=multiple of 80, RECFM=FB, DISP=(NEW,DELETE).

Specifying **DISP=(NEW,DELETE)** minimizes space loss problems. SMPWRK2 is generally needed only for the duration of the SMP/E job step. To keep the data set longer than that, you must use a different DISP value and compress the data set to reclaim space.

The SMS-related options DATACLAS, MGMTCLAS, STORCLAS, and DSNTYPE provide additional data set support. For more information, refer to *z/OS DFSMS: Using Data Sets*.

Device Direct access only.

Notes:

1. BLKSIZE must not exceed 32760.
2. Do not specify BLKSIZE=0. SMP/E does not support system-determined block size (SDB) for this data set.
3. If the BLKSIZE value is omitted or invalid, SMP/E uses a default of 3200.

SMPWRK3

ddname SMPWRK3.

Use The SMPWRK3 data set is used as temporary storage for object modules supplied by a SYSMOD, object modules created by assemblies, and IMASPZAP control cards following ++ZAP statements.

Attributes Partitioned; LRECL=80, BLKSIZE=multiple of 80, RECFM=FB, DISP=(NEW,DELETE).

Specifying **DISP=(NEW,DELETE)** minimizes space loss problems. SMPWRK3 is generally needed only for the duration of the SMP/E job step. To keep the data set longer than that, you must use a different DISP value and compress the data set to reclaim space.

If you want to save assembled object modules until SMP/E has successfully applied or accepted the SYSMODs that caused the assemblies, specify **DISP=(NEW,KEEP)**. This allows SMP/E to reuse the assembled object modules if the APPLY or ACCEPT command fails. For more information on reusing assemblies, see the *SMP/E Commands* manual.

Note: If SMPWRK3 is a permanent data set, make sure to specify **OLD** as the initial disposition. Do not specify **SHR**. An initial disposition of SHR may cause an abend.

The SMS-related options DATACLAS, MGMTCLAS, STORCLAS, and DSNTYPE provide additional data set support. For more information, refer to *z/OS DFSMS: Using Data Sets*.

Device Direct access only

Notes:

1. BLKSIZE must not exceed 32760.
2. Do not specify BLKSIZE=0. SMP/E does not support system-determined block size (SDB) for this data set.
3. If the BLKSIZE value is omitted or invalid, SMP/E uses a default of 3200.

SMPWRK4

ddname SMPWRK4.

Use The SMPWRK4 data set is used as temporary storage for IMASPZAP and link-edit input containing EXPAND control statements.

Attributes Partitioned; LRECL=80, BLKSIZE=multiple of 80, RECFM=FB, DISP=(NEW,DELETE).

Specifying **DISP=(NEW,DELETE)** minimizes space loss problems. SMPWRK4 is generally needed only for the duration of the SMP/E job step. To keep the data set longer than that, you must use a different DISP value and compress the data set to reclaim space.

The SMS-related options DATACLAS, MGMTCLAS, STORCLAS, and DSNTYPE provide additional data set support. For more information, refer to *z/OS DFSMS: Using Data Sets*.

Device Direct access only.

Notes:

1. BLKSIZE must not exceed 32760.
2. Do not specify BLKSIZE=0. SMP/E does not support system-determined block size (SDB) for this data set.
3. If the BLKSIZE value is omitted or invalid, SMP/E uses a default of 3200.

SMPWRK6

ddname SMPWRK6.

Use The SMPWRK6 data set is used during APPLY and ACCEPT processing as temporary storage for inline replacements for data elements. SMP/E places the input in this data set so it can be directly accessed and installed by the copy utility or SMP/E.

Attributes Partitioned; LRECL=80, BLKSIZE=multiple of 80, RECFM=FB, DISP=(NEW,DELETE).

Specifying **DISP=(NEW,DELETE)** minimizes space loss problems. SMPWRK6 is generally needed only for the duration of the SMP/E job step. To keep the data set longer than that, you must use a different DISP value and compress the data set to reclaim space.

The SMS-related options DATACLAS, MGMTCLAS, STORCLAS, and DSNTYPE provide additional data set support. For more information, refer to *z/OS DFSMS: Using Data Sets*.

Device Direct access only.

Notes:

1. BLKSIZE must not exceed 32760.
2. Do not specify BLKSIZE=0. SMP/E does not support system-determined block size (SDB) for this data set.
3. If the BLKSIZE value is omitted or invalid, SMP/E uses a default of 3200.

SMPnnnnn

ddname SMP*nnnnn*, where *nnnnn* is a number from 00000 through 99999.

Use SMP/E allocates SMP*nnnnn* data sets for its own internal processing. To avoid processing errors, do not assign such a ddname to any data set.

SYSIN

ddname SYSIN.

Use Contains package control statements used as input to the GIMZIP and GIMUNZIP service routines.

Attributes Sequential or a member of a partitioned data set; LRECL=80

Device Direct access or SYSIN file.

Notes:

1. SYSIN can be defined to GIMZIP and GIMUNZIP only with a DD statement.
2. The size of the input data set will vary depending on how you intend to manage it.
3. You are responsible for managing the contents and space of the input data set.
4. This data set may reside in the hierarchical file system. Specify **PATHOPTS(ORDONLY)** and either **FILEDATA=BINARY** or **FILEDATA=TEXT** on the DD statement for this data set, if it is to reside in the HFS. If you specify **FILEDATA=BINARY**, each line of input must be padded with blanks to the 80-byte record length (because there is no end of record marker for FILEDATA=BINARY). If you specify **FILEDATA=TEXT**, use the newline character (X'15') to mark the end of each line.

SYSLIB

ddname SYSLIB.

Use The SYSLIB data set is a concatenation of macro libraries that are to be used by the assembler utility.

For APPLY and RESTORE processing, the data sets should be concatenated in this order:

1. SMPMTS
2. MACLIB
3. MODGEN
4. Target system macro libraries (such as libraries specified for SYSLIB on the ++MAC statement)
5. Distribution macro libraries (such as libraries specified for DISTLIB on the ++MAC statement)

For more information about the proper SYSLIB concatenation for ACCEPT processing, see *SMP/E User's Guide*.

Attributes Partitioned; LRECL=80, BLKSIZE=multiple of 80, RECFM=FB.

Device Direct access only.

SYSPRINT

ddname SYSPRINT.

You can specify different SYSPRINT data sets for each of the utilities that SMP/E calls. This can be done with the PRINT value in

the appropriate UTILITY entry. For more information, see “UTILITY Entry (Global Zone)” on page 318.

Use The SYSPRINT data set contains output from the utilities called by SMP/E.

Attributes Sequential; DISP=MOD.

Do not specify **LRECL**, **BLKSIZE**, or **RECFM** unless they are compatible with the attributes used by the utilities called.

If SYSPRINT is allocated to a data set, the disposition must be MOD, because SMP/E opens and closes the SYSPRINT DD statement at each SET command. If the disposition is SHR or OLD, SYSPRINT contains only the output from the last set of commands processed before the end of SMP/E processing.

Device SYSOUT, printer, direct access, or tape.

SYSOUT or a tape is recommended, because SYSPRINT might be opened with different DCB attributes by the various utilities and service aids called by SMP/E.

Notes:

1. BLKSIZE must not exceed 32760.
2. How you specify the SYSPRINT data set can affect whether a listing of the utility output is produced. For example, no listing is produced if the PRINT value in the UTILITY entry specifies either of the following:
   - A DDDEF for a DUMMY data set
   - A DDDEF for a data set that is sent to a SYSOUT class that suppresses output

SYSPUNCH

ddname SYSPUNCH.

Use The SYSPUNCH data set is a temporary data set containing object modules assembled by running the job stream produced by system generation or the GENERATE command. These modules are not installed in the distribution libraries at ACCEPT time.

Attributes Partitioned; LRECL=80, BLKSIZE=multiple of 80, RECFM=FB.

Do not specify a DISP value. Instead, let SMP/E use its defaults:
- DISP=(NEW,PASS) for the first job generated
- DISP=(OLD,PASS) for any subsequent jobs

Device Direct access only.

SYSUT1, SYSUT2, and SYSUT3

ddname SYSUT1, SYSUT2, and SYSUT3.

Use These are scratch data sets for SMP/E and the utilities it calls. They can be used instead of the following data sets when certain utilities are called:
- SYSIN
  - For invocations of the copy utility
  - For some invocations of update utility
  - For some invocations of the *x*37 RETRY COMPRESS utility

- SYSLIN for invocations of the link-edit utility
- SYSUT2 for invocations of the assembler utility

SYSUT1 and SYSUT2 are also used by the GIMDTS service routine:

- SYSUT1 points to the data set containing the input in its original format.
- SYSUT2 points to the data set containing the transformed output.

Attributes Sequential; DISP=(NEW,DELETE)

Device Direct access only.

Notes:

1. BLKSIZE must not exceed 32760.
2. Do not specify BLKSIZE=0. SMP/E does not support system-determined block size (SDB) for this data set.
3. If the BLKSIZE value is omitted or invalid, SMP/E uses a default of 3200.

SYSUT4

ddname SYSUT4.

Use This data set can be used instead of the SYSIN data sets when certain utilities are called:

- For invocations of the *x*37 RETRY COMPRESS utility
- For some invocations of the assembler utility
- For RECEIVE FROMNETWORK and RECEIVE FROMNTS command processing

Attributes Sequential; DISP=(NEW,DELETE)

Device Direct access only.

Notes:

1. BLKSIZE must not exceed 32760.
2. Do not specify BLKSIZE=0. SMP/E does not support system-determined block size (SDB) for this data set.
3. If the BLKSIZE value is omitted or invalid, SMP/E uses a default of 3200.

Target Library

ddname The ddname for a target library should match the low-level qualifier of the data set name. For example, the ddname for SYS1.LINKLIB should be LINKLIB.

Use Target libraries contain updated versions of macros, source modules, and load modules that were stored during APPLY or RESTORE processing. They are the libraries used for your running system. You must provide a DDDEF entry or DD statement for each target library that is being processed.

Attributes Partitioned.

Device Direct access only.

Text Library (TXLIB)

ddname The ddname for a text library must match the TXLIB value on the ++JCLIN or element MCS. For example, the ddname for the text library on statement **++MOD(MODA) TXLIB(LIBX)** must be LIBX.

Use Text libraries contain JCLIN input or replacements for macros, source, or object modules that have not been link-edited. They are used when the JCLIN or elements are provided in partitioned data sets rather than inline or in relative files.

Attributes Partitioned.

Device Direct access only.

Zone Statement

ddname The ddname must match the name of the target or distribution zone.

Use The *zone* DD statement is used by SMP/E to access an individual target or distribution zone in a CSI data set. For example, to have SMP/E access target zone MVSTGT1, you can provide a DD statement like this one:

```
//MVSTGT1  DD DSN=SMPE.SMPCSI.CSI,DISP=SHR
```

If you do not provide a DD statement for a target or distribution zone, SMP/E allocates the zone dynamically using the ZONEINDEX information in the GLOBALZONE entry. Also note that, while DD statements may be used to override the ZONEINDEX information, they are not a substitute for a zoneindex. A zoneindex is always required for a zone.

Attributes VSAM; RECORDSIZE(24 143), KEYS(24 0).

Device Direct access only.

Notes:

1. The low-level qualifier of the data set name must be **CSI**.
2. If you have used IBM SMP/E for z/OS and OS/390, V3R1 to update a zone, you might not be able to process that zone with previous releases of SMP/E. For more information, see the “Migration” section of *SMP/E User’s Guide*.
3. When running on systems with the required level of DFP, SMP/E automatically takes advantage of the local shared resource (LSR) feature of VSAM. This reduces the number of times SMP/E must access data when it is reading CSI data sets. As a result, SMP/E performance is improved for commands such as APPLY, APPLY CHECK, ACCEPT, ACCEPT CHECK, and especially LIST.
4. CSI data sets should usually be allocated dynamically. However, you may want to use the batch local shared resources (BLSR) subsystem with expanded storage hiperspaces (instead of SMP/E’s implementation of LSR) to improve SMP/E performance during APPLY and ACCEPT processing for a large number of changes. For more information about BLSR, see the Notes in “SMPCSI” on page 127.
5. For information about the CSI data set containing the global zone, see “SMPCSI” on page 127.

Chapter 5. SMP/E Data Set Entries

This chapter describes the entries in the various data sets SMP/E uses. It discusses the following:

- How these data sets are organized
- How the entries in these data sets are organized
- How to create, update, and obtain information about these entries

Note: The LIST, UCLIN, and UNLOAD commands used to process these entries are described in *SMP/E Commands*.

How the Data Sets Are Organized

SMP/E uses the following data sets as a database for its processing: the CSI, PTS, SCDS, MTS, and STS. It is important to understand how SMP/E uses each of these data sets and how they are related.

The following is a description of each data set:

- The **CSI** data set is a VSAM data set that serves as the primary data set for SMP/E. SMP/E divides the CSI into multiple partitions using the VSAM key structure. Each partition is referred to as a *zone*.

  There are three types of zones:

  1. **Global zone.** A single global zone is used to record information about SYSMODs that have been received. The global zone also contains information enabling SMP/E to access the other two types of zones, and information allowing you to tailor parts of SMP/E processing.
  2. **Target zones.** One or more target zones are used to record information about the status and structure of the operating system (or target) libraries.
  3. **Distribution zones.** One or more distribution zones are used to record information about the status and structure of the distribution libraries

  In Figure 5 on page 152 the CSI is pictured as one data set. In fact, you can group all your zones within one VSAM data set (up to 32766 zones per data set), or divide them up into multiple VSAM data sets, even one zone per data set. The choice is yours; it is based on such factors as:

  – Which packs the associated target and distribution libraries are on. It is advisable to keep the associated zone on the same pack as the libraries controlled from the zone, so when the pack is dumped, the data and description are kept synchronized.
  – The organization of your shop. Totally separate service organizations for different products may require many separate data sets.

  Figure 6 on page 153 illustrates the same zone relationship as Figure 5 on page 152, with the CSI spread across multiple VSAM data sets.
- The **PTS** is used strictly as a storage data set for SYSMODs. A SYSMOD is read from the SMPPTFIN data set and stored directly on the PTS without any modifications or SMP/E information. It is, therefore, related to the global zone in that both data sets contain information about the received SYSMODs. You can, therefore, look at the global zone and the PTS as a pair of data sets that must be processed (such as scratched, saved, or modified) concurrently.

© Copyright IBM Corp. 1986, 2002

Data Set Entries

- The **SCDS** is used by SMP/E to store backup copies of modified target zone entries during apply processing of a SYSMOD with inline JCLIN. Thus, the SCDS is directly related to a specific target zone, and each target zone must have its own SCDS.
- The **MTS** is a library in which SMP/E stores updated copies of macros during apply when no other target macro library is identified. The MTS is, therefore, related to a specific target zone, and each target zone must have its own MTS data set.
- The **STS** is a library in which SMP/E stores updated copies of source during APPLY when no other target source library is identified. The STS is, therefore, related to a specific target zone, and each target zone must have its own STS data set.

The relationships among SMP/E data sets and zones are shown in Figure 5 for a single CSI data set, and in Figure 6 on page 153 for multiple CSI data sets.

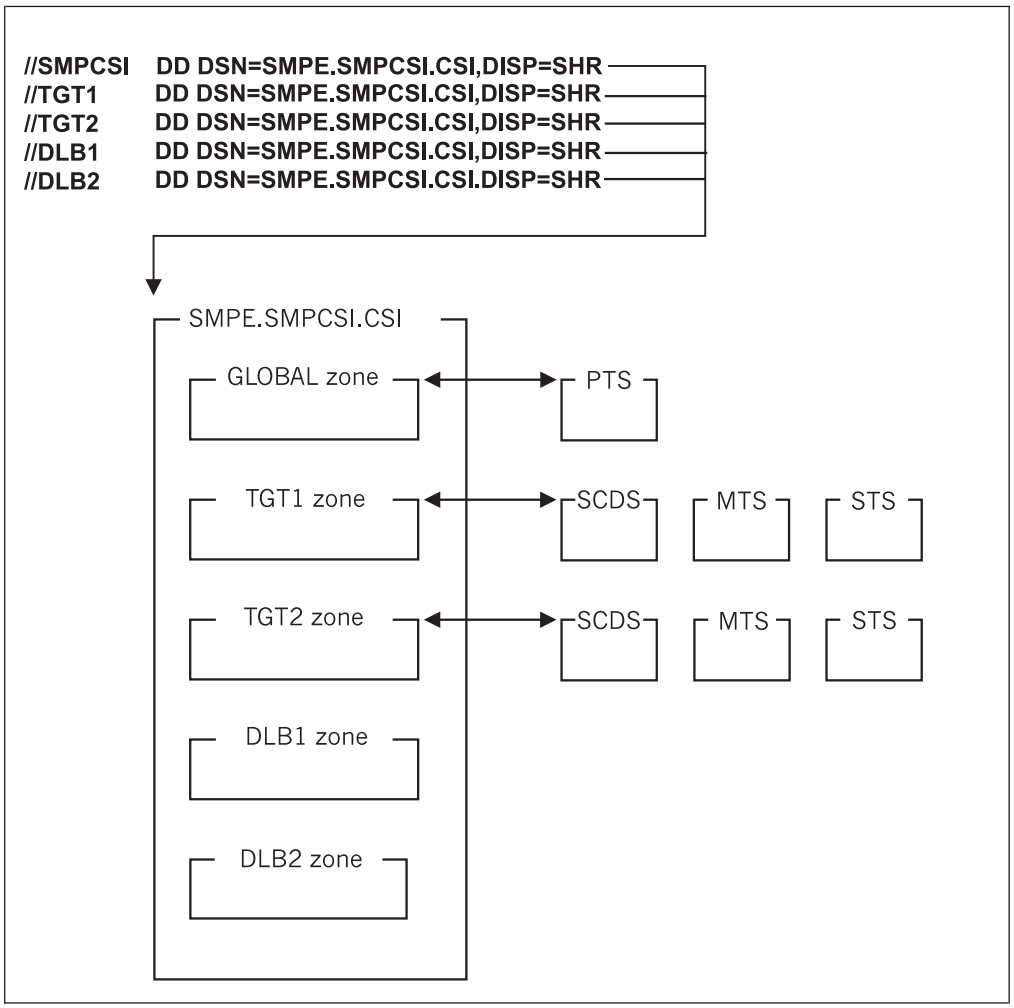

Figure 5. Single-CSI Structure

How Data Set Entries Are Organized

Within the global zone, target zone, and distribution zone, SMP/E keeps many types of entries. These can be divided into two categories:

- Those that are used to control SMP/E processing. These consist of:
  - GLOBALZONE definition entry
  - TARGETZONE definition entry
  - DLIBZONE definition entry
  - OPTIONS entries
  - UTILITY entries
  - DDDEF entries
  - FMIDSET entries
  - ZONESET entries

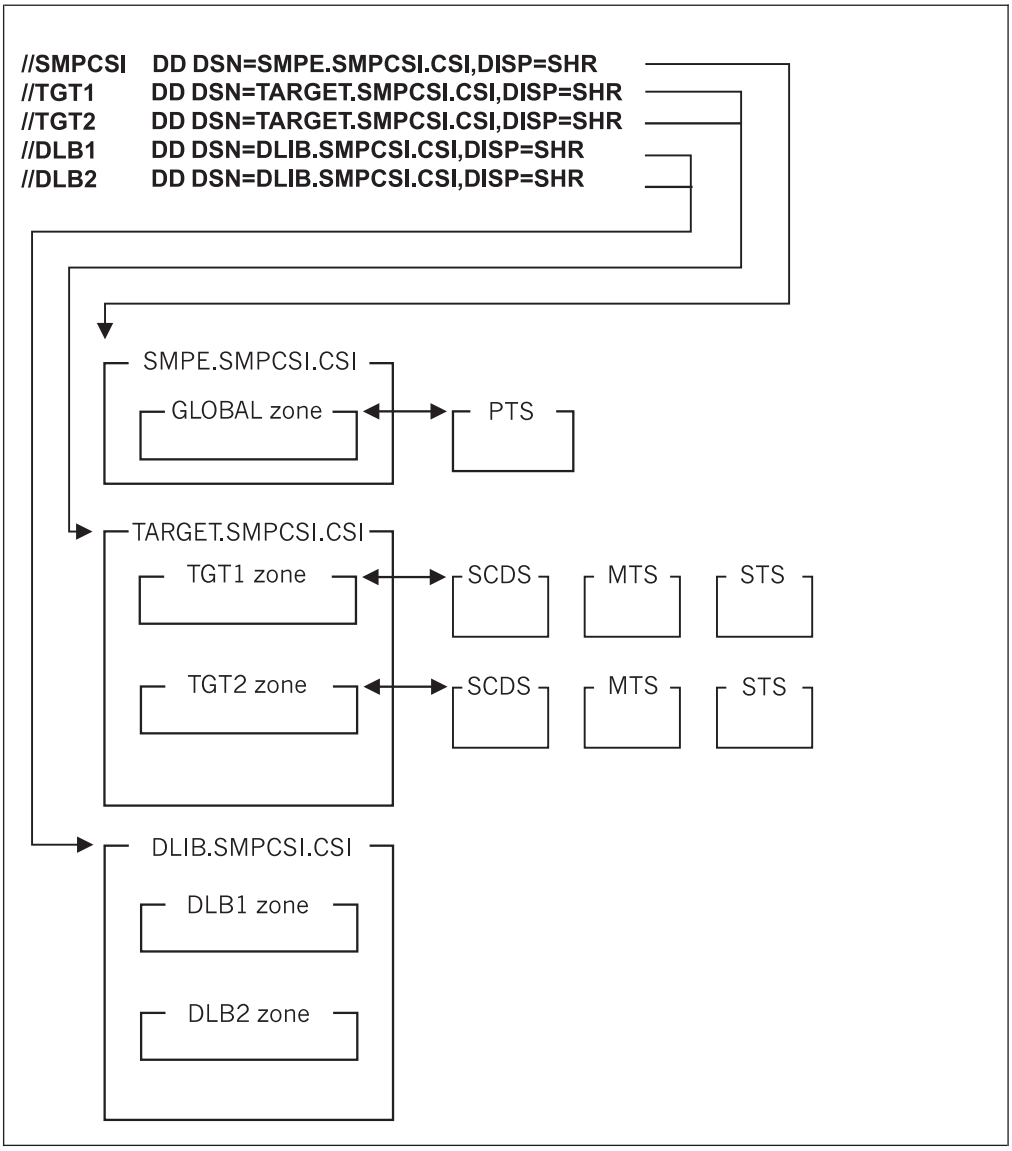

Figure 6. Multiple-CSI Structure

- Those that are used to define the status and structure of the target libraries and distribution libraries. These consist of:
  - ASSEM entries

- Data element entries
- DLIB entries
- hierarchical file system element entries
- LMOD entries
- MAC entries
- MOD entries
- SRC entries
- SYSMOD entries

Note: The SYSMOD entries also contain information referred to as HOLDDATA.

The following sections describe the entry relationships for the entries that control processing, and entries that define status and structure.

Entries that Control Processing

The starting point for all SMP/E processing is the SMPCSI DD statement. This DD statement directs SMP/E to the CSI data set containing the **GLOBALZONE entry**. The next step after obtaining the GLOBALZONE entry depends on which zone you direct SMP/E to process. (For more information on identifying which zone SMP/E is to process, see the SET command chapter of the *SMP/E Commands* manual.

Processing the Global Zone

Once the GLOBALZONE entry has been obtained and you direct SMP/E to process the global zone (for instance to receive SYSMODs), the OPTIONS subentry in the GLOBALZONE entry directs SMP/E to the correct **OPTIONS entry** to use. The OPTIONS entry contains information about the SMP/E processing options to be used. During processing, SMP/E may have to invoke one of the system utilities. Another entry, the **UTILITY entry**, is used to define to SMP/E information about the utility program to invoke, the parameters to pass to it, and the return code to expect from it. SMP/E finds the UTILITY entry through the OPTIONS entry that names the UTILITY entry. Thus, for SMP/E to use the correct utility program, you must define **both** the UTILITY entry that describes the utility program and the OPTIONS entry that names that UTILITY entry.

The other processing entries in the global zone are the DDDEF, FMIDSET, and ZONESET entries.

- **DDDEF entries** provide information used by SMP/E to dynamically allocate data sets. These entries are not connected to any other processing entry. They are accessed individually, by name, as SMP/E needs information to dynamically allocate a specific data set. They are not shown in Figure 7 on page 155.
- **FMIDSET entries** define sets of FMIDs. Various other commands, such as APPLY and ACCEPT, can then process SYSMODs by FMIDSET.
- **ZONESET entries** define sets of zones. The REPORT command can then check for SYSMODs in the zones defined in the ZONESET.

Each of these entries (GLOBALZONE, OPTIONS, UTILITY, DDDEF, FMIDSET, and ZONESET) exists in the global zone.

Figure 7 on page 155 illustrates how the various global zone processing entries are related to one another. Subsequent sections of this chapter provide a more detailed explanation of each entry and the data it contains.

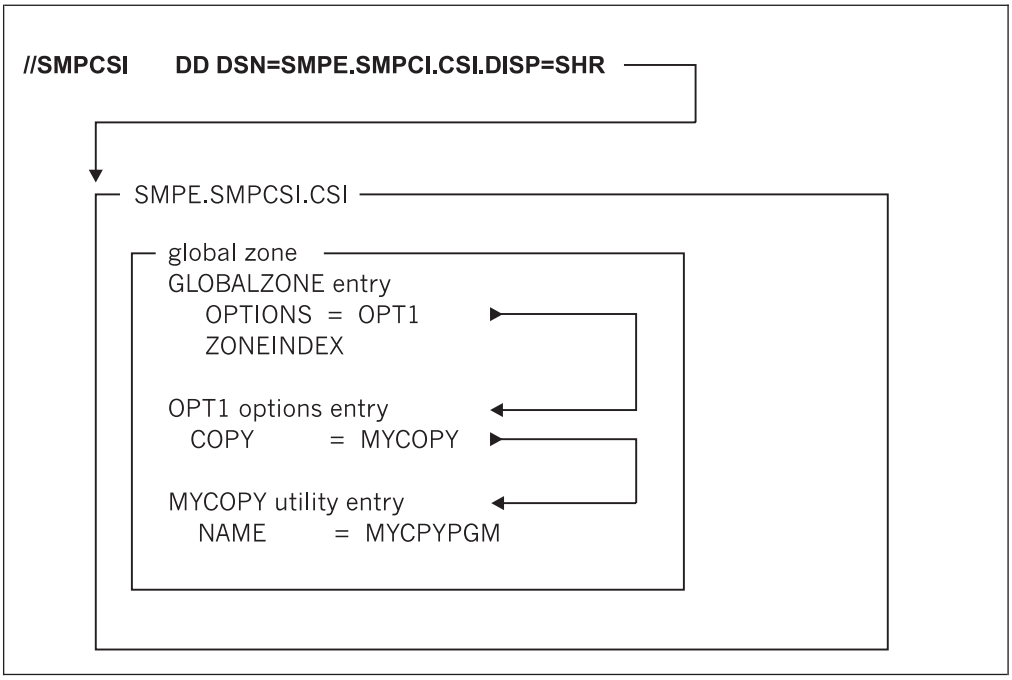

Figure 7. Global Zone: Relationships between Entries that Control Processing

Processing a Target Zone or a Distribution Zone

A target zone and a distribution zone are processed in very similar ways. The only difference is the name of the controlling entry. Therefore, they are covered together, and the differences are pointed out as appropriate.

When you direct SMP/E to process a target zone (for instance to apply a PTF) or a distribution zone (for instance to accept that PTF), SMP/E accesses the **ZONEINDEX subentries** in the GLOBALZONE entry. Those subentries list the target zones and distribution zones that you have defined, including the zone type, target or DLIB, and the name of the CSI data set on which they reside.

After SMP/E has determined that the zone specified is valid, it uses the CSI data set name specified to dynamically allocate a DD statement to access the required data set (optionally, SMP/E looks for a DD statement equal to the zone name). SMP/E can now access that DD statement to obtain further processing information for the zone.

The first entry accessed is the **TARGETZONE entry** (for target zones) or the **DLIBZONE entry** (for distribution zones). Each of these, in turn, directs SMP/E to the correct OPTIONS entry to use, which in turn directs SMP/E to the correct UTILITY entries. Target and distribution zones also contain DDDEF entries.

- The **OPTIONS and UTILITY entries** serve the same purpose for the target zone and distribution zone as for the global zone. However, the OPTIONS and UTILITY entries used to process a target zone or distribution zone are defined not in the target or distribution zone, but in the global zone that points to the target or distribution zone.
- TARGETZONE and DLIBZONE entries contain a **RELATED subentry**, which identifies a related zone. For a target zone, the RELATED subentry identifies the

distribution zone from which this target zone was built. For a distribution zone, the RELATED subentry identifies the target zone that was built from these distribution libraries.

- **DDDEF entries** in the target zone and distribution zone are not connected to any other entries. They provide information used by SMP/E to dynamically allocate data sets.

Figure 8 on page 157 shows how the various target zone, distribution zone, and global zone processing entries are related. Subsequent sections of this chapter provide a more detailed explanation of each entry and the data it contains. Because neither the FMIDSET entries nor the DDDEF entries are connected to any other distribution zone or target zone entry, they are not shown in this figure.

Entries that Define Status and Structure

Once the processing control information for the specified zone has been determined, SMP/E uses the status and structure entries within the various zones to determine what should be done.

Processing the Global Zone

Processing the global zone is fairly simple, in that only one structure and status entry exists, SYSMOD. **SYSMOD entries** are used to determine whether a SYSMOD has been received already. Various indicators within the SYSMOD entry also indicate whether the SYSMOD has been applied or accepted. The SYSMOD entries, although not directly connected to the PTS **MCS entries**, are implicitly connected, in that SMP/E assumes that there is a one-to-one relationship between global zone SYSMOD entries and PTS MCS entries.

Processing the Target Zone

Processing the target zone is much more complex than processing the global zone, because the operations performed are much more complex and require more entry types to direct SMP/E. The primary purpose of the target zone entries is to enable SMP/E to apply new function and service to the target system libraries; thus, the APPLY command is used to describe the relationship between the various target zone entries.

The starting point for applying a SYSMOD is actually the **global zone SYSMOD entries**. From the global zone SYSMOD entry, SMP/E obtains information about the relationship between this SYSMOD and other SYSMODs. SMP/E then uses other global zone SYSMOD entries and the **target zone SYSMOD entries** to resolve these relationships.

Once the eligible SYSMODs have been determined, the actual MCS statements from the PTS are accessed and lead SMP/E to the other target zone entries:

- ++MAC and ++MACUPD statements lead to target zone MAC entries.
- ++SRC and ++SRCUPD statements lead to target zone SRC entries.
- ++MOD and ++ZAP statements lead to target zone MOD and LMOD entries.
- Data element statements lead to target zone data element entries.
- ++*hfs_element* statements lead to target zone hierarchical file system element entries.

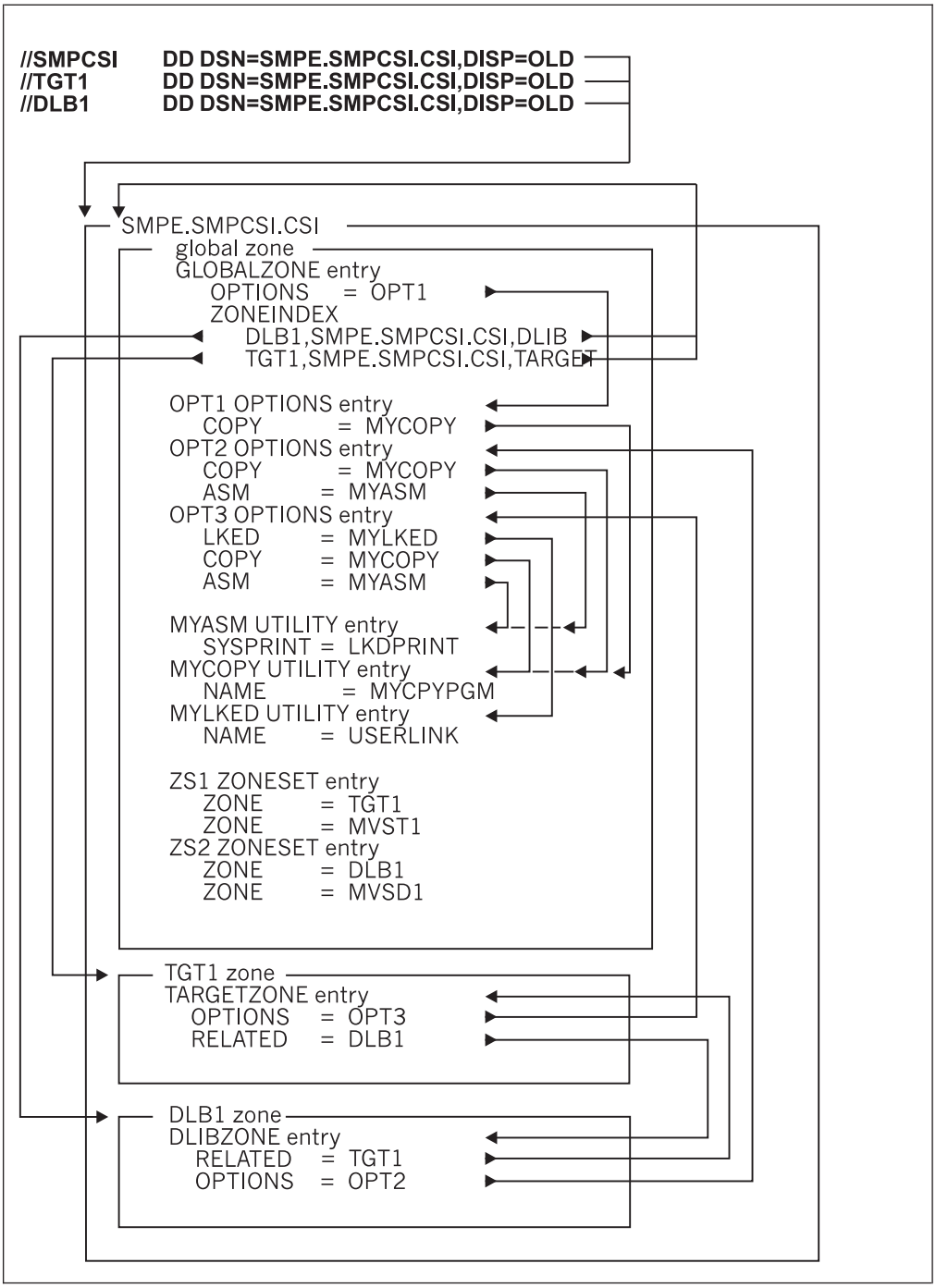

Figure 8. Target Zone and Distribution Zone: Relationships between Entries that Control Processing

If the SYSMOD replaces or modifies a macro (++MAC or ++MACUPD in SYSMOD), SMP/E uses the target zone **MAC entry** to determine the functional and service level of the macro and to determine whether any assemblies must be redone as a result of the macro update. This is done by checking the GENASM subentries in the target zone MAC entry. The GENASM subentries contain the names of either ASSEM entries or SRC entries in the target zone. In either case, SMP/E accesses the appropriate entry and uses the information stored there to perform the required assemblies.

If the SYSMOD replaces or modifies source (++SRC or ++SRCUPD in SYSMOD), SMP/E uses the target zone **SRC entry** to determine the functional and service level of the source and the library containing the source code, and then performs the required assembly.

After an assembly has been done (either using data from the ASSEM entry or SRC entry), SMP/E knows that the resulting object deck must be link-edited into the target libraries somewhere. Although there is no direct connection (that is, no subentry value present) between the ASSEM or SRC entries and a **MOD entry**, there is an implicit relationship. SMP/E assumes that for each ASSEM and SRC entry, there exists a MOD entry with the same name. Thus, after performing the assembly, SMP/E accesses the corresponding MOD entry to determine where to install the object deck. This leads us to the same point as if a MOD were supplied in the SYSMOD.

If the SYSMOD replaces or modifies a module (++MOD or ++ZAP in SYSMOD), or if an assembly was done for a SRC or ASSEM entry, SMP/E uses the target zone **MOD entry** to determine the functional and service level of the module and the load modules into which the module should be linked. Information about load modules is kept in the LMOD subentries in the MOD entry.

The LMOD subentries within the MOD entry lead SMP/E to the target zone **LMOD entries**. These represent load modules that exist in the target libraries. LMOD entries contain all the information necessary either to relink the load module or to superzap it.

If the SYSMOD replaces a data element (a data element MCS is in the SYSMOD), SMP/E uses the target zone **data element entry** to determine the functional and service level of the data element. It then gets the data element installed in the appropriate target library.

If the SYSMOD replaces a hierarchical file system element (a ++*hfs_element* MCS is in the SYSMOD), SMP/E uses the target zone **hierarchical file system element entry** to determine the functional and service level of the hierarchical file system element. It then gets the hierarchical file system element installed in the appropriate target library (which is actually in a hierarchical file system). If a shell script has been defined for the element, SMP/E passes control to the shell script to allow it to perform any necessary post-installation processing.

After all the updating, assembling, linking, and so on, are done, you arrive back almost at the starting point, the SYSMOD entry. The difference is that this is the target zone SYSMOD entry rather than the global zone SYSMOD entry. The target zone SYSMOD entry contains all the information about what has been done as a result of installing this SYSMOD.

That leaves us with one target zone entry not discussed, the **DLIB entry**. The DLIB entries are not connected to any other entry. They are used by SMP/E to keep information about libraries that are totally copied during product installation, and are used during APPLY processing to create the appropriate element and LMOD entries for elements coming from the copied DLIB.

Figure 9 on page 159 shows how the various SMP/E status and structure entries are related. Subsequent sections of this chapter provide a more detailed explanation of each entry and the data it contains.

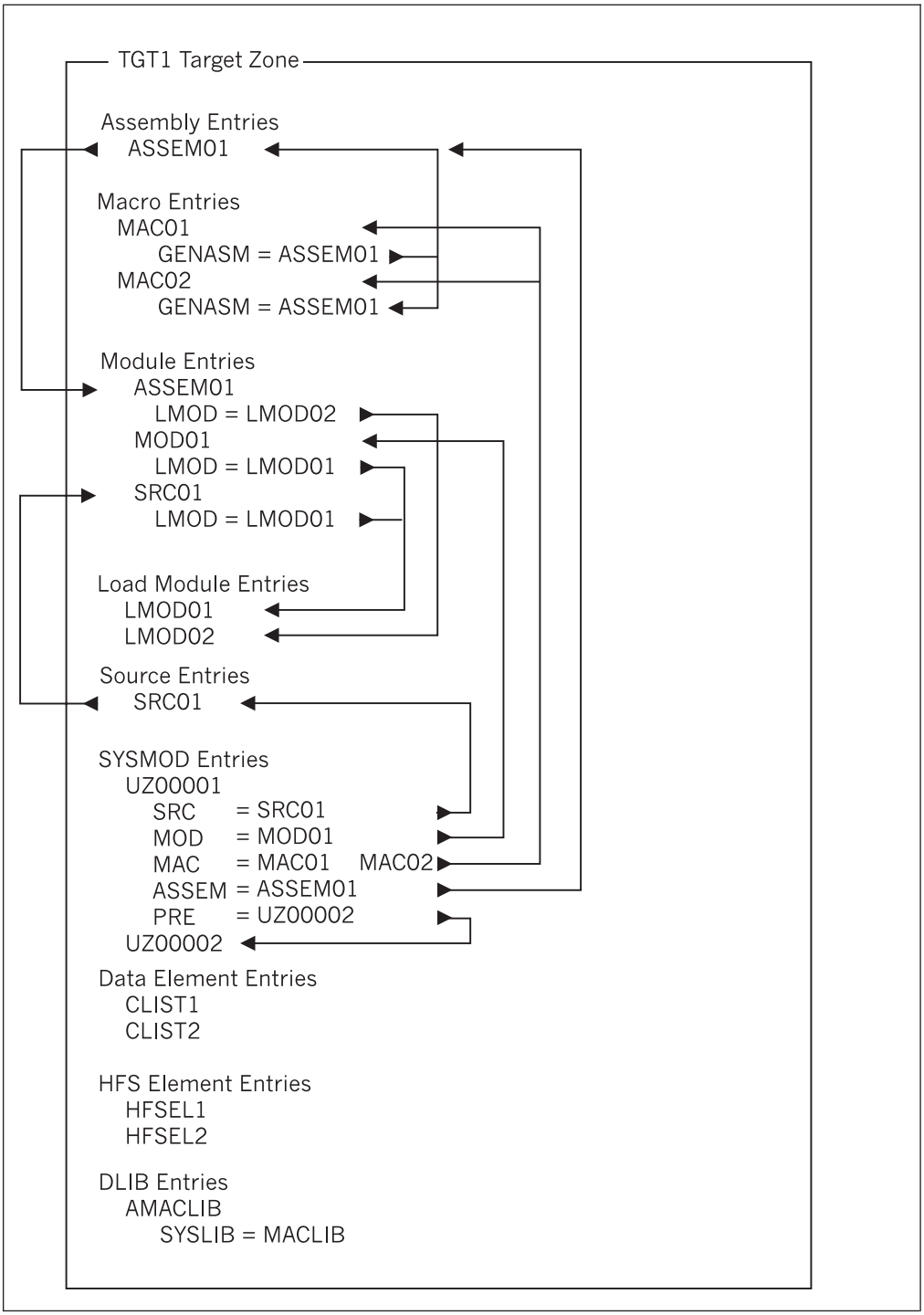

Figure 9. Target Zone: Relationships between Entries that Define Status and Structure

Note: Lines to the left of the figure are implicit connections based on the assumption that entries with equal names will be found.

Processing the Distribution Zone

Processing the distribution zone is similar to processing the target zone, but more complex than processing the global zone. The primary purpose of the distribution zone entries is to enable SMP/E to accept new function and service to the

distribution libraries; it is also used to remove a SYSMOD from the system. The ACCEPT command will be used to describe the relationship between the various distribution zone entries.

The starting point for accepting a SYSMOD is actually the **global zone SYSMOD entry**. From that entry, SMP/E obtains information about the relationship between this SYSMOD and other SYSMODs. SMP/E then uses other global zone SYSMOD entries and the **distribution zone SYSMOD entries** to resolve these relationships. In addition, SMP/E checks the target zone SYSMOD entries to ensure that the selected SYSMODs have been applied.

After the eligible SYSMODs have been determined, the various MCS statements lead SMP/E to the other distribution zone entries:

- ++MAC and ++MACUPD statements lead to distribution zone MAC entries.
- ++SRC and ++SRCUPD statements lead to distribution zone SRC entries.
- ++MOD and ++ZAP statements lead to distribution zone MOD entries.
- Data element statements lead to distribution zone data element entries.
- ++*hfs_element* statements lead to distribution zone hierarchical file system element entries.

If the SYSMOD replaces or modifies a macro (++MAC or ++MACUPD in SYSMOD), SMP/E uses the distribution zone **MAC entry** to determine the functional and service level of the macro and to determine whether any assemblies must be redone as a result of the macro update. This is done by checking the GENASM subentries in the target zone MAC entry. The names in the list can be names of either target zone ASSEM or SRC entries. In either case, SMP/E accesses the appropriate entry and uses the information stored there to perform the required assemblies.

If the SYSMOD replaces or modifies a source (++SRC or ++SRCUPD in SYSMOD), SMP/E uses the distribution zone **SRC entry** to determine the functional and service level of the source and the library containing the source code, and then performs the required assembly.

After an assembly has been done (with data from either the ASSEM entry or the SRC entry), SMP/E knows that the resulting object deck may be link-edited into the distribution libraries somewhere. Although there is no direct connection (that is, no subentry value present) between the ASSEM or SRC entries and a **MOD entry**, there is an implicit relationship. SMP/E assumes that for each ASSEM and SRC entry there exists a MOD entry with the same name. Thus, after performing the assembly, SMP/E accesses the corresponding MOD entry to determine where to install the object deck. This leads us to the same point as if a MOD were supplied in the SYSMOD.

If the SYSMOD replaces or modifies a module (++MOD or ++ZAP in SYSMOD), or if an assembly was done for a SRC or ASSEM entry, SMP/E uses the distribution zone **MOD entry** to determine the functional and service level of the module, the DLIB into which it must be linked, the load modules into which the module should be linked, and the link-edit attributes that should be used. Information about load modules is kept in the LMOD subentries in the MOD entry.

The LMOD subentries within the MOD entry lead SMP/E to the distribution zone **LMOD entries**. These represent load modules that exist in the target libraries. LMOD entries contain all the information necessary, either to relink the load module or to update it using IMASPZAP.

If the SYSMOD replaces a data element (a data element MCS is in the SYSMOD), SMP/E uses the distribution zone **data element entry** to determine the functional and service level of the data element. It then gets the data element installed in the appropriate distribution library.

If the SYSMOD replaces a hierarchical file system element (a ++*hfs_element* MCS is in the SYSMOD), SMP/E uses the distribution zone **hierarchical file system element entry** to determine the functional and service level of the hierarchical file system element. It then gets the hierarchical file system element installed in the appropriate distribution library.

After all the updating, assembling, linking, and so on, are done, you arrive back almost at the starting point, the SYSMOD entry. The difference is that this is the distribution zone SYSMOD entry, which contains all the information about what was done as a result of installing this SYSMOD.

Figure 10 on page 162 shows how the various SMP/E status and structure entries are related. Subsequent sections of this chapter provide a more detailed explanation of each entry and the data it contains.

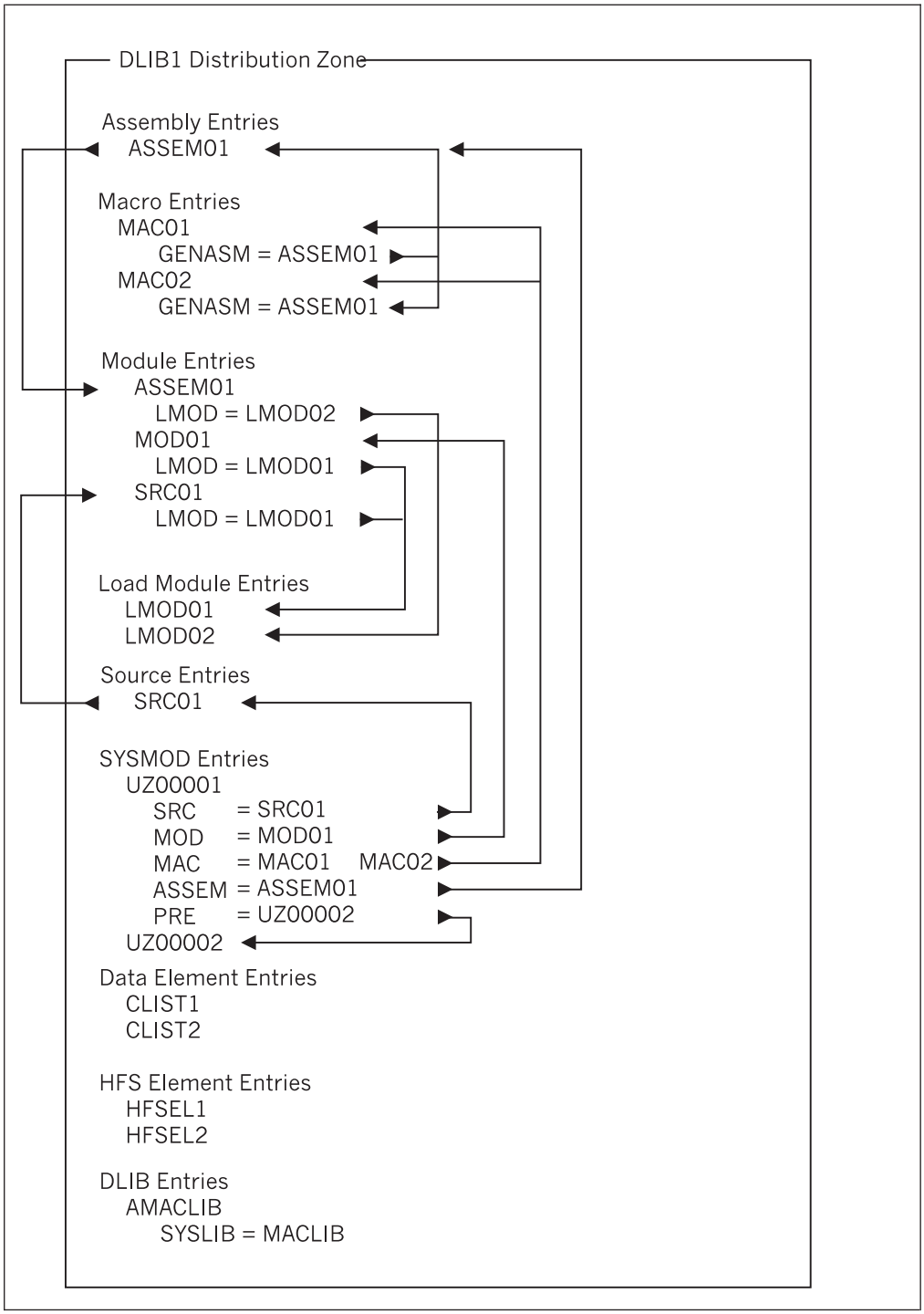

Figure 10. Distribution Zone: Relationships between Entries that Define Status and Structure

Note: Lines to the left of the figure are implicit connections based on the assumption that entries with equal names will be found.

The remaining sections of this chapter deal with each of the specific entries in the various SMP/E data sets.

ASSEM Entry (Distribution and Target Zone)

The ASSEM entry contains assembler statements that can be assembled to create an object module. It is created during JCLIN processing when SMP/E encounters an assembler step with inline assembler input. When the module is reassembled using the statements in the ASSEM entry, SMP/E copies those statements into the SMPWRK2 data set, and then assembles the module.

If a macro is invoked in the assembly, the ASSEM entry is pointed to by the GENASM subentry in the MAC entry created for that macro. As a result, when that macro is updated, SMP/E can reassemble the affected module using the statements in the ASSEM entry. For additional information, see the "Processing" section in the JCLIN command chapter of the *SMP/E Commands* manual.

Subentries

These are the subentries for the ASSEM entry as they appear in the LIST output:

name
is the name of the ASSEM entry. It corresponds to the name of the module that can be reassembled by use of that ASSEM entry.

The name can contain from 1 to 8 alphanumeric characters.

ASSEMBLER INPUT
is the actual assembler statements that were saved for this module during JCLIN processing. These statements are passed to the assembler whenever this module must be reassembled.

The UCL operands are **++ASMIN** and **++ENDASMIN**.

- An ASSEM entry must contain at least the ++ASMIN and ++ENDASMIN statements, plus the associated assembler statements.
- The ++ASMIN and ++ENDASMIN statements must start in column 1.
- No other operands can start on the same line as the ++ASMIN statement.
- If you specify the ++ASMIN statement, you must also specify the ++ENDASMIN statement.

LASTUPD
identifies the cause of the last change to this ASSEM entry.

The UCL operand is **LASTUPD(***value***)**. This subentry can contain one of the following values:

JCLIN
indicates that the change was made during JCLIN command processing.

UCLIN
indicates that the change was made as a result of UCLIN processing.

sysmod_id
indicates that the change was made during the installation of the indicated SYSMOD.

The SYSMOD ID must contain 7 alphanumeric characters.

LASTUPD TYPE
indicates how the entry was last changed.

The UCL operand is **LASTUPDTYPE(***value***)**. This subentry can contain one of the following values:
ADD The entry was added.
UPD The entry was updated.

LIST Examples

To list all the ASSEM entries in a particular zone, you can use the following commands:

```
SET      BDY(TGT1)          /* Set to requested zone.   */.
LIST     ASSEM              /* List all ASSEM entries.  */.
```

To list specific ASSEM entries, you can use these commands:

```
SET      BDY(TGT1)          /* Set to requested zone.   */.
LIST     ASSEM(ASSEM01      /* List only these two      */
               ASSEM02)     /* entries.                 */.
```

The format of the LIST output for each ASSEM entry is the same for both of these commands. The only difference is the number of ASSEM entries listed. Figure 11 is an example of LIST output for ASSEM entries.

```
PAGE nnnn  - NOW SET TO zzzzzz ZONE nnnnnnn  DATE mm/dd/yy TIME hh:mm:ss SMP/E 31.nn SMPLIST OUTPUT

TGT1          ASSEMBLER ENTRIES


  NAME

ASSEM01   LASTUPD         = JXY1102 TYPE=ADD
          ASSEMBLER INPUT = ...
                            ... assembler statements
                            ....

ASSEM02   LASTUPD         = JXY1121 TYPE=UPD
          ASSEMBLER INPUT = ...
                            ... assembler statements
                            ...
```

Figure 11. ASSEM Entry: Sample LIST Output

You can use the LIST command to find the MAC entries for macros that are called by the assembler statements in this ASSEM entry. To include the names of these MAC entries in the LIST output, you can use the XREF operand, as shown in these commands:

```
SET      BDY(TGT1)          /* Set to requested zone.     */.
LIST     ASSEM              /* List all ASSEM entries     */
         XREF               /* and macros that use them.  */.
```

Notes:

1. You can use XREF in either mass mode or select mode.
2. SMP/E obtains the data included for the XREF operand by checking the GENASM subentries in all the MAC entries. Because this data is not contained in the ASSEM entry itself, you cannot use UCLIN to change it in the ASSEM entry.

Figure 12 on page 165 is an example of the LIST output produced when the XREF operand is used.

```
PAGE nnnn  - NOW SET TO zzzzzz ZONE nnnnnnn  DATE mm/dd/yy TIME hh:mm:ss SMP/E 31.nn SMPLIST OUTPUT

TGT1          ASSEMBLER ENTRIES


  NAME

ASSEM01   LASTUPD         = JXY1102 TYPE=ADD
          ASSEMBLER INPUT = ...
                            ... assembler statements
                            ...
          MACROS USED     = NAME      FMID
                            MAC01     JXY1102
                            MAC02     JXY1121

ASSEM02   LASTUPD         = JXY1121 TYPE=UPD
          ASSEMBLER INPUT = ...
                            ... assembler statements
                            ...
          MACROS USED     = NAME      FMID
                            MAC01     JXY1102
                            MAC03     JXY1121
```

Figure 12. ASSEM Entry: Sample LIST Output When XREF Is Specified

UNLOAD Examples

To dump the ASSEM entries in UCL format, you can use the UNLOAD command. To unload all the ASSEM entries in a particular zone, you can use the following commands:

```
SET      BDY(TGT1)          /* Set to requested zone.     */.
UNLOAD   ASSEM              /* Unload all ASSEM entries.  */.
```

To unload specific ASSEM entries, you can use these commands:

```
SET      BDY(TGT1)          /* Set to requested zone.     */.
UNLOAD   ASSEM(ASSEM01      /* Unload only these two      */
               ASSEM02)     /* entries.                   */.
```

The format of the UNLOAD output for each ASSEM entry is the same for both of these commands. The only difference is the number of ASSEM entries listed. Figure 13 on page 166 is an example of UNLOAD output for ASSEM entries.

ASSEM Entry (Distribution and Target Zone)

```
UCLIN .
REP       ASSEM           ( ASSEM01  )
          LASTUPD         ( JXY1102  )
          LASTUPDTYPE     ( ADD )
++ASMIN
...
... assembler statements
...
++ENDASMIN
                          .

REP       ASSEM           ( ASSEM02  )
          LASTUPD         ( JXY1121  )
          LASTUPDTYPE     ( UPD )
++ASMIN
...
... assembler statements
...
++ENDASMIN
                          .
ENDUCL.
```

Figure 13. ASSEM Entry: Sample UNLOAD Output

UCLIN Examples

You can use the ADD, REP, and DEL UCL statements to change subentries in the ASSEM entry. When you use UCLIN to update an ASSEM entry, keep these points in mind:

- After the UCLIN changes are done, the ASSEM entry must contain at least ++ASMIN and ++ENDASMIN statements, plus the associated assembler input. Otherwise, there is not enough information in the entry to assemble the associated module.
- The input following the ++ASMIN statement replaces the existing assembler input in the ASSEM entry.
- If a DEL statement deletes all the existing subentries in the entry, SMP/E deletes the entire entry.
- When SMP/E processes a DEL statement, it does not compare any assembler input after the ++ASMIN statement with the input that is currently in the ASSEM entry. It just deletes the existing assembler input. This causes an error, because there is now insufficient data in the ASSEM entry.

The following examples are provided to help you use the ASSEM entry.

Example 1: Deleting an ASSEM Entry

The main use of UCLIN for an ASSEM entry is to delete the entry. Here is an example:

```
SET      BDY(TGT1)          /* Set to target zone.      */.
UCLIN                       /*                          */.
DEL      ASSEM(ASSEM01)     /* Delete the entry.        */.
ENDUCL                      /*                          */.
```

Example 2: Adding a New ASSEM Entry

To create an ASSEM entry, you should run the JCLIN command rather than use UCLIN. (For examples of how JCLIN creates ASSEM entries, see the *SMP/E Commands* manual. However, you can also use UCLIN to create ASSEM entries. For example, you can use the following commands to create a new ASSEM entry and to update an **existing** MAC entry to show that the macro is used in the new assembly:

```
SET      BDY(TGT1)          /* Set to target zone.      */.
UCLIN                       /*                          */.
ADD      ASSEM(ASSEM99)     /* New ASSEM entry.         */
++ASMIN                     /* Assembler data.          */
ASSEM99  CSECT              /*                          */
         MAC99    0,0,1     /*                          */
         END ASSEM99        /*                          */
++ENDASMIN                  /* End of assembler data.   */
                            /* End of adding ASSEM.     */.
ADD      MAC(MAC99)         /* Modify macro entry used  */
         GENASM(ASSEM99)    /* to indicate use in new   */
                            /* assembly entry.          */.
ENDUCL                      /*                          */.
```

BACKUP Entries (SMPSCDS)

BACKUP entries are a collection of target zone entries that are copied to the SMPSCDS during APPLY processing before they are updated by inline JCLIN, a ++MOVE MCS, or a ++RENAME MCS, or before they are deleted by an element MCS with the DELETE operand. A BACKUP entry is also created for a MOD entry if a SYSMOD being installed provides a ++MOD statement that either changes the distribution library for the module or adds the module to an existing load module.

- As SMP/E processes the inline JCLIN for a given SYSMOD, it determines which entries will be affected by that JCLIN. Before making the changes, it saves a copy of each of those entries on the SMPSCDS.
- Likewise, as SMP/E processes the ++MOVE, ++RENAME, and element MCSs in a given SYSMOD, it determines which entries will be updated or deleted. Before updating or deleting the entries, it saves a copy of each of those entries on the SMPSCDS.

Besides saving copies of the affected entries, SMP/E also saves a SYSMOD entry on the SMPSCDS to indicate which entries will be added or updated by the SYSMOD. Each entry is associated with only one SYSMOD. The entries associated with a SYSMOD are called the BACKUP entries for that SYSMOD. BACKUP entries consist of:

- A SYSMOD entry indicating what entries were added, deleted, or updated
- ASSEM entries for updated target zone ASSEM entries
- LMOD entries for updated target zone LMOD entries
- MAC entries for updated or deleted target zone MAC entries
- MOD entries for updated or deleted target zone MOD entries
- SRC entries for updated or deleted target zone SRC entries
- Data element entries for deleted target zone data element entries
- Hierarchical file system entries for deleted target zone hierarchical file system entries
- DLIB entries for updated target zone DLIB entries

SMP/E provides access to the BACKUP entries as a group—for example, through the LIST command—but it does not provide access to the individual entries or subentries.

Subentries

The subentries in the BACKUP entries are the same as those in the various entry types that are copied. For more information, see the section in this chapter describing each entry.

LIST Examples

To list the BACKUP entries for all the SYSMODs in the SMPSCDS, you can use the following commands:

```
SET      BDY(TGT1)          /* Set to requested tgt zone. */.
LIST     BACKUP             /* List all BACKUP entries.   */.
```

To list the BACKUP entries for a specific SYSMOD, you can use these commands:

```
SET      BDY(TGT1)          /* Set to requested tgt zone. */.
LIST     BACKUP(UZ12345,    /* List only BACKUP entries   */
                UZ12346)    /* for these two SYSMODs.     */.
```

The format of the LIST output for each group of BACKUP entries is the same for both of these commands. The only difference is the number of SYSMODs for which BACKUP entries are listed.

When you list the BACKUP entries for a SYSMOD, the first entry in the output is a summary entry for the SYSMOD, which indicates the date and time the SYSMOD was applied, as well as which entries were added or updated as a result of applying the SYSMOD. This is followed by a listing of all the existing target zone entries affected by this SYSMOD, before they were updated. Nothing is listed for added entries, because no entry existed before the SYSMOD was installed.

Figure 14 on page 170 is a partial example of LIST output for BACKUP entries. It shows the summary records, but not all the backup copies of the entries modified by the SYSMOD. This is because the format of those copies is the same as the format for the original target zone entries.

UCLIN Examples

You can use the DEL UCL statement to delete BACKUP entries from the SMPSCDS. This can be helpful if you plan to do an APPLY followed by ACCEPT when several target libraries have been created from the same distribution library.

When a SYSMOD is accepted into a distribution zone, the entries associated with the SYSMOD are automatically deleted from the SMPSCDS for the RELATED target zone. However, even if the SYSMOD was also applied to other target zones created from the same distribution zone, SMP/E does not clean up the SMPSCDS data sets for the other target zones.

To delete the entries from these data sets, you can accept the SYSMOD and name these other target zones as the RELATED zone. However, this updates the distribution library each time, which is time-consuming and can use up space in the distribution library data set.

Instead, you can use the DEL command to delete these entries without updating the distribution library. To determine which entries to specify, check the SMPLOG data set to see which ones SMP/E deleted during ACCEPT processing.

Note: You can also use the CLEANUP command to delete BACKUP entries without specifying them individually. For more information on the CLEANUP command, see the *SMP/E Commands* manual.

BACKUP Entries (SMPSCDS)

```
PAGE nnnn  - NOW SET TO zzzzzz ZONE nnnnnnn  DATE mm/dd/yy TIME hh:mm:ss SMP/E 31.nn SMPLIST OUTPUT

SMPCDS        BACKUP ENTRIES

  NAME

UZ12345   DATE/TIME APP   = 01.100 08:15:00
          ASSEM    (ADD)  = ASSEM01   ASSEM02   ASSEM03
          LMOD     (ADD)  = LMOD01    LMOD02
          MACRO    (ADD)  = MAC01
          MOD      (ADD)  = MOD01     MOD02     MOD03     MOD04
          SRC      (ADD)  = SRC01     SRC02     SRC03
          DLIB     (ADD)  = DLIB01
          ASSEM    (DEL)  = ASSEM04   ASSEM05
          LMOD     (DEL)  = LMOD03    LMOD04    LMOD05
          MACRO    (DEL)  = MAC05     MAC09
          MOD      (DEL)  = MOD10     MOD11     MOD12
          SRC      (DEL)  = SRC11
          ASSEM    (UPD)  = ASSEM91   ASSEM92   ASSEM93
          LMOD     (UPD)  = LMOD9A    LMOD9B
          MACRO    (UPD)  = MAC99
          MOD      (UPD)  = MOD99
          SRC      (UPD)  = SRC99
          DLIB     (UPD)  = DLIB99
...
... deleted entries for ASSEM04 ASSEM05
...                     LMOD03  LMOD05  LMOD05
...                     MAC05   MAC09
...                     MOD10   MOD11   MOD12
...                     SRC11
... updated entries for ASSEM91 ASSEM92 ASSEM93
...                     LMOD9A  LMOD9B
...                     MAC99
...                     MOD99
...                     SRC99
...                     DLIB99
... would follow here - format is as in sample
... for each target zone entry
...
```

Figure 14. BACKUP Entries: Sample LIST Output

Example: Deleting BACKUP Entries

Assume BACKUP entries exist on the SCDS for SYSMODs UZ12345 and UZ12346. Those SYSMODs have been accepted, but the BACKUP entries have not been deleted from the SCDS. This can happen when multiple systems are supported off one set of DLIBs, where you accept from only one of the target systems. Here is an example of UCL you could use to delete the BACKUP entries from the SCDS:

```
SET      BDY(TGT1)          /* Set to TGT1 zone.          */.
UCLIN                       /*                            */.
DEL      BACKUP(UZ12345)    /* Delete the BACKUP entries. */.
DEL      BACKUP(UZ12346)    /* Delete the BACKUP entries. */.
ENDUCL                      /*                            */.
```

Note: You must specify a separate UCL statement for each BACKUP entry to be deleted.

Data Element Entry (Distribution and Target Zone)

The data element entry describes an element that is not a macro, module, or source (for example, a CLIST or a sample procedure). Data elements may exist in distribution or target libraries. A data element entry is created the first time you install a SYSMOD that contains an MCS for a data element that does not yet have an entry in the CSI data set.

SMP/E records the function and service level of the data element in the entry. Once a data element entry exists, it is updated as subsequent SYSMODs that affect the data element are installed.

Table 2 on page 10 shows the types of entries used for data elements. Some types of elements, such as panels, messages, or text, may have been translated into several languages. In these cases, the entry type contains *xxx*, which represents the language used for the element. (If an element was not translated, the entry type does not contain any *xxx* value.) Table 3 on page 13 shows the *xxx* values and the languages they represent.

Subentries

These are the subentries for the data element entry as they appear in the LIST output:

name
: is the name of the data element represented by the entry. It can contain from 1 to 8 alphanumeric characters and $, #, @, or hex C0.

ALIAS
: specifies a list of alias names for the element.

The UCL operand is **ALIAS(***name***...)**.

Each alias name can contain from 1 to 8 alphanumeric characters.

DISTLIB
: specifies the ddname of the distribution library for the data element.

The UCL operand is **DISTLIB(***ddname***)**.

- The ddname can contain from 1 to 8 alphanumeric characters.
- The DISTLIB subentry is required. Without it, SMP/E cannot process any changes for the data element.

FMID
: specifies the functional owner of this data element. The functional owner is the last function SYSMOD that replaced this element.

The UCL operand is **FMID(***sysmod_id***)**.

The SYSMOD ID must contain 7 alphanumeric characters.

LASTUPD
: identifies the cause of the last change to this data element entry.

The UCL operand is **LASTUPD(***value***)**. This subentry can contain one of the following values:

UCLIN
: indicates that the change was made as a result of UCLIN processing.

sysmod_id
: indicates that the change was made during the installation of the indicated SYSMOD.

Data Element Entry (Distribution and Target Zone)

The SYSMOD ID must contain 7 alphanumeric characters.

LASTUPD TYPE
indicates how the entry was last changed.

The UCL operand is **LASTUPDTYPE(***value***)**. This subentry may contain one of the following values:
ADD The entry was added.
UPD The entry was updated.

RMID
identifies the last SYSMOD that **replaced** this data element. Any subsequent SYSMOD that modifies this data element must have a defined relationship (such as PRE or SUP) with this SYSMOD.

The UCL operand is **RMID(***sysmod_id***)**.

- The SYSMOD ID must contain 7 alphanumeric characters.
- If **RMID** is not specified but **FMID** is, SMP/E sets the RMID value to the specified FMID.

SYSLIB
specifies the ddname of the target library for the data element.

The UCL operand is **SYSLIB(***ddname***)**.
- You can specify only one SYSLIB value.
- The ddname can contain from 1 to 8 alphanumeric characters.

LIST Examples

To list all the data element entries of a given type (such as CLIST) in a particular zone, you can use the following commands:

```
SET      BDY(TGT1)          /* Set to requested zone.   */.
LIST     CLIST              /* List all CLIST entries.  */.
```

To list specific CLIST entries, you can use these commands:

```
SET      BDY(TGT1)          /* Set to requested zone.   */.
LIST     CLIST(CLIST1       /* List only these two      */
             CLIST2)        /* entries.                 */.
```

The format of the LIST output for each data element entry is the same for both of these commands. The only difference is the number of data element entries listed. Figure 15 is an example of LIST output for data element entries.

```
PAGE nnnn  - NOW SET TO zzzzzz ZONE nnnnnnn  DATE mm/dd/yy TIME hh:mm:ss SMP/E 31.nn SMPLIST OUTPUT

TGT1          CLIST ENTRIES


  NAME

CLIST1    LASTUPD         = MYCLST1 TYPE=ADD
          LIBRARIES       = DISTLIB=AMACLIB   SYSLIB=ISPCLIB
          FMID            = MYCLST1
          RMID            = MYCLST1

CLIST2    LASTUPD         = MYCPTF1 TYPE=ADD
          LIBRARIES       = DISTLIB=AMACLIB   SYSLIB=ISPCLIB
          FMID            = MYCLST1
          RMID            = MYCPTF1
```

Figure 15. Data Element Entry: Sample LIST Output

By specifying the FORFMID operand, you can reduce the number of data element entries listed. When FORFMID is specified, SMP/E lists a data element entry only if its FMID matches one of the FMIDs specified on the FORFMID operand. For example, to list CLIST entries whose FMIDs are defined in FMIDSET TP or else are MYCLST1, you can use these commands:

```
SET      BDY(TGT1)          /* Set to target zone.      */.
LIST     CLIST              /* List all CLIST entries   */
         FORFMID(TP         /* for the TP FMIDSET       */
                 MYCLST1)   /* and FMID MYCLST1.        */.
```

You can use the LIST command to find out the names of all SYSMODs that have modified data elements. To include the names of these SYSMODs in the LIST output, you can use the XREF operand, as shown in these commands:

```
SET      BDY(TGT1)          /* Set to requested zone.   */.
LIST     CLIST              /* List all CLIST entries   */
         XREF               /* and related SYSMODs.     */.
```

Notes:

1. You can use XREF in either mass mode or select mode.
2. SMP/E obtains the data included for the XREF operand by checking for entries for this data element in all the SYSMOD entries. Because this data is not contained in the data element entry itself, you cannot use UCLIN to change it in the data element entry.

Figure 16 on page 174 is an example of the LIST output produced when the XREF operand is used.

Data Element Entry (Distribution and Target Zone)

```
PAGE nnnn  - NOW SET TO zzzzzz ZONE nnnnnnn  DATE mm/dd/yy TIME hh:mm:ss SMP/E 31.nn SMPLIST OUTPUT

TGT1          CLIST ENTRIES


  NAME

CLIST1    LASTUPD         = MYCLST1 TYPE=ADD
          LIBRARIES       = DISTLIB=AMACLIB   SYSLIB=ISPCLIB
          FMID            = MYCLST1
          RMID            = MYCLST1
          SYSMOD HISTORY  = SYSMOD   TYPE      DATE   MCS     --STATUS--
                            MYCLST1  FUNCTION 01.100  CLIST   APP    ACC

CLIST2    LASTUPD         = MYCPTF1 TYPE=ADD
          LIBRARIES       = DISTLIB=AMACLIB   SYSLIB=ISPCLIB
          FMID            = MYCLST1
          RMID            = MYCPTF1
          SYSMOD HISTORY  = SYSMOD   TYPE      DATE   MCS     --STATUS--
                            MYCPTF1  PTF      01.150  CLIST   APP    ACC
```

Figure 16. Data Element Entry: Sample LIST Output When XREF Is Specified

UNLOAD Examples

To dump the data element entries in UCL format, you can use the UNLOAD command. To unload all the CLIST entries in a particular zone, you can use the following commands:

```
SET      BDY(TGT1)          /* Set to requested zone.     */.
UNLOAD   CLIST              /* Unload all CLIST entries.  */.
```

To unload specific CLIST entries, you can use these commands:

```
SET      BDY(TGT1)          /* Set to requested zone.     */.
UNLOAD   CLIST(CLIST1       /* Unload only these two      */
            CLIST2)         /* entries.                   */.
```

The format of the UNLOAD output for each data element entry is the same for both of these commands. The only difference is the number of data element entries listed. Figure 17 on page 175 is an example of UNLOAD output for CLIST entries.

```
UCLIN .
REP       CLIST           ( CLIST1   )
          LASTUPD         ( MYCLST1  )
          LASTUPDTYPE     ( ADD )
          DISTLIB         ( AMACLIB  )
          SYSLIB          ( ISPCLIB  )
          FMID            ( MYCLST1 )
          RMID            ( MYCLST1 )
                          .
REP       CLIST           ( CLIST2   )
          LASTUPD         ( MYCPTF1  )
          LASTUPDTYPE     ( ADD )
          DISTLIB         ( AMACLIB  )
          SYSLIB          ( ISPCLIB  )
          FMID            ( MYCLST1 )
          RMID            ( MYCPTF1 )
                          .
ENDUCL.
```

Figure 17. Data Element Entry: Sample UNLOAD Output

By specifying the FORFMID operand, you can reduce the number of data element entries unloaded. When FORFMID is specified, SMP/E unloads a data element entry only if its FMID matches one of the FMIDs specified on the FORFMID operand. For example, to unload CLIST entries whose FMIDs are either defined in FMIDSET TP or are MYCLST1, you can use these commands:

```
SET      BDY(TGT1)          /* Set to target zone.        */.
UNLOAD   CLIST              /* Unload all CLIST entries   */
         FORFMID(TP         /* for the TP FMIDSET         */
                 MYCLST1)   /* and FMID MYCLST1.          */.
```

UCLIN Examples

You can use the ADD, REP, and DEL UCL statements to change subentries in the data element entry. After the UCLIN changes are made, the data element entry must contain at least the following subentries:

- DISTLIB
- FMID
- RMID

Otherwise, there is not enough information in the entry to process the data element. If any of these subentries are missing, SMP/E does not make the requested UCL updates to the entry, and the entry remains as it was before the UCL command.

Example: Adding a New Data Element Entry

Assume you have installed CLIST3 outside of SMP/E, but now you want to start using SMP/E to track changes to that CLIST. Here is an example of the UCL statements you would use to define entries for that CLIST in the appropriate target and distribution zones:

```
SET      BDY(TGT1)          /* Set to target zone.      */.
UCLIN                       /*                          */.
ADD      CLIST(CLIST3)      /* Define new CLIST entry.  */
         DISTLIB(AMACLIB)   /* Define DLIB.             */
         SYSLIB(ISPCLIB)    /* System library.          */
         FMID(MYCLST1)      /* Functional owner.        */.
ENDUCL                      /*                          */.
SET      BDY(DLB1)          /* Now do same to DLIB.     */.
UCLIN                       /*                          */.
ADD      CLIST(CLIST3)      /* Define new CLIST entry.  */
         DISTLIB(AMACLIB)   /* Define DLIB.             */
```

```
                                /* no SYSLIB info in DLIB.  */
          FMID(MYCLST1)         /* Functional owner.        */.
ENDUCL                          /*                          */.
```

DDDEF Entry (Distribution, Target, and Global Zone)

The DDDEF entry contains the information SMP/E needs to dynamically allocate a specific data set. With DDDEF entries, you do not have to provide a DD statement for every data set SMP/E may need to process a particular command. When SMP/E determines that it needs a specific data set, it looks for a DD statement that it can use to allocate that data set. If there is no DD statement, SMP/E checks whether the current zone contains a DDDEF entry for that data set. If so, it uses the information in the DDDEF entry to dynamically allocate the data set.

For more information about dynamically allocating data sets, see *SMP/E User's Guide*.

Notes:

1. In a job with multiple SET commands, if you use DDDEF entries that specify SYSOUT for SMP/E output (such as SMPOUT or SMPRPT), SMP/E produces multiple SYSOUT data sets. This can cause undesirable results; for example, the output could appear to be out of sequence from one SET command to the next. Therefore, when you run such a job, you may prefer to use DD statements instead of DDDEF entries for SMP/E output data sets.
2. SMP/E does not strictly enforce rules for which subentries you can specify in DDDEF entries for specific data sets. To prevent possible allocation errors, refer to *z/OS MVS JCL User's Guide*.

Subentries

These are the subentries for the DDDEF entry as they appear in the LIST output: For more information concerning DDDEF entry syntax, see the UCLIN command chapter see the *SMP/E Commands* manual.

name
is the ddname of the data set to be allocated.

- The name can contain from 1 to 8 alphabetic (A through Z), national (@, #, or $), or numeric (0 through 9) characters. The first character must be alphabetic or national.
- Other than checking for duplicate DDDEF names in a given zone, SMP/E does not check whether the specified name is associated with another data set. For example, SMP/E does not check whether a DDDEF name is the same as a zone name. You must do this checking yourself to avoid undesired results.

BLK(*size*), CYL, or TRK
specifies the space units to be used in allocating the data set: blocks, cylinders, or tracks.

The UCL operand is **BLOCK(*size*)**, **CYLINDERS**, or **TRACKS**.

- *size* is the size, in decimal, of each block to be allocated. To specify the number of blocks to be allocated, use SPACE.
- You can specify either the long form or the short form of these operands:
  - **BLOCK** or **BLK**
  - **CYLINDERS** or **CYL**
  - **TRACKS** or **TRK**
- These operands are mutually exclusive with each other and with OLD, MOD, SHR, CONCAT, PATH, and SYSOUT.

CATALOG, DELETE, or KEEP
specifies the final disposition (DISP) of the data set.

The UCL operand is **CATALOG**, **DELETE**, or **KEEP**.

- These operands are mutually exclusive with each other and with CONCAT and PATH.
- You cannot specify a final disposition for SMPTLIB data sets. SMP/E automatically specifies a final disposition based on the command being processed. For more information, see “SMPTLIB” on page 141.

CONCAT

identifies one or more DDDEF entries, **existing in the same zone**, that should be concatenated during SMP/E processing.

The UCL operand is **CONCAT(***name*...**)**.

- The DDDEF names can contain from 1 to 8 alphabetic (A through Z), national (@, #, or $), or numeric (0 through 9) characters. The first character must be alphabetic or national.
- There must be a DDDEF entry for each specified name. SMP/E does not check other sources (such as DD statements or GIMDDALC control statements in SMPPARM member GIMDDALC) to get the information needed to allocate the data sets.
- SMP/E allows you to specify up to 123 names. However, the actual number of partitioned data sets that can be concatenated depends on the operating system you are running under. To determine the maximum number of data sets you can concatenate, see *z/OS DFSMS: Using Data Sets*, SC26-7410.
- CONCAT is required for concatenated data sets.
- CONCAT cannot specify any DDDEF entries that contain the CONCAT operand. (You cannot nest concatenated DDDEF entries.)
- CONCAT is mutually exclusive with all other operands.

Note: When a DDDEF that specifies a disposition of OLD is allocated as part of a CONCAT, a disposition of SHR is used for the allocation.

DATACLAS

specifies the name of a data class to be used for allocating a new data set managed by SMS.

The UCL operand is **DATACLAS(***name***)**.

- The data class name is defined by the storage administrator at your installation. This value can contain from 1 to 8 alphanumeric characters (A through Z and 0 through 9) or national characters (@, #, $) and must start with either an alphabetic or national character.
- You can specify this operand only if SMS manages your storage.
- Specify this operand only when you are allocating a new data set. SMS ignores this parameter if it is specified for an existing data set.
- This operand is mutually exclusive with PATH and CONCAT.

DATASET

is the name of the data set to be allocated.

The UCL operand is **DATASET(***dsname***)**.

- You can specify either **DATASET** or **DA**.
- The data set name must conform to standard naming conventions for data sets. Each part of the name must contain from 1 to 8 characters, separated from the other parts by a period (.), with no intervening blanks. The maximum length of the entire name is 44 characters (including the periods).
- The data set name itself cannot contain parentheses.

- To define a dummy data set, omit the DATASET operand and specify an initial DISP of NEW.
- **DATASET** is required if **OLD**, **SHR**, or **MOD** is specified.
- DATASET is mutually exclusive with CONCAT, PATH, and SYSOUT.
- You cannot use DATASET to specify the data set name of an SMPTLIB data set. Instead, you can use the DSPREFIX operand in either the SMPTLIB DDDEF entry or in the OPTIONS entry used to process those data sets.
- SMP/E does not check whether the specified data set name is unique within the zone. For example, SMP/E does not check whether the data set name was also defined in another DDDEF entry in the same zone, or whether the data set name defines the CSI data set containing the zone. You must do this checking yourself to avoid undesired results.

DIR

specifies the number of directory blocks to allocate.

The UCL operand is **DIR(***nnnn***)**.

- The number specified can contain from 1 to 4 decimal digits.
- DIR is mutually exclusive with OLD, MOD, SHR, CONCAT, and PATH.

DSNTYPE

specifies the type of partitioned data set to be created.

The UCL operand is **DSNTYPE(LIBRARY)** or **DSNTYPE(PDS)**.

LIBRARY

specifies that a PDSE (which must be an SMS-managed data set) is to be created.

PDS

specifies that a PDS is to be created.

You can also specify DSNTYPE in either a data class or a member of SYS1.PARMLIB.

Notes:

1. This operand is mutually exclusive with PATH and CONCAT.
2. When SMP/E RECEIVE processing allocates a new SMPTLIB data set, it uses the original DSNTYPE of the corresponding RELFILE data set. If SMP/E cannot determine the original DSNTYPE of the corresponding RELFILE data set, SMP/E uses the DSNTYPE value specified in the SMPTLIB DDDEF entry.

DSPREFIX

specifies the data set prefix to be used to construct the full data set name for SMPTLIB data sets. For more information about names for SMPTLIB data sets, see *SMP/E Commands*.

The UCL operand is **DSPREFIX(***prefix***)**.

- The prefix can contain from 1 to 26 alphanumeric characters.
- The prefix must follow standard conventions for naming data sets.
- Instead of specifying **DSPREFIX** in the SMPTLIB DDDEF entry, you can specify it in the OPTIONS entry that is in effect when you receive RELFILEs into the SMPTLIB data sets.

  If you do not specify a data set prefix in the SMPTLIB DDDEF entry or in the appropriate OPTIONS entry, no prefix is included when SMP/E assigns a name to the SMPTLIB data sets.

- DSPREFIX is mutually exclusive with CONCAT and PATH.

Note: This subentry exists only in the global zone.

MGMTCLAS
specifies the name of a management class to be used for allocating a new data set managed by SMS.

The UCL operand is **MGMTCLAS(***name***)**.

- The management class name is defined by the storage administrator at your installation. This value can contain from 1 to 8 alphanumeric characters (A through Z and 0 through 9) or national characters (@, #, $) and must start with either an alphabetic or national character.
- You can specify this operand only if SMS manages your storage.
- Specify this operand only when you are allocating a new data set. SMS ignores this parameter if it is specified for an existing data set.
- This operand is mutually exclusive with PATH and CONCAT.

MOD, NEW, OLD, or SHR
specifies the initial disposition (DISP) of the data set.

The UCL operand is **MOD**, **NEW**, **OLD**, or **SHR**.

- These operands are mutually exclusive with each other and with CONCAT and PATH.

  OLD, SHR, and MOD are also mutually exclusive with SYSOUT, PROTECT, BLOCK, CYLINDERS, TRACKS, DIR, and SPACE.
- You cannot specify an initial disposition for SMPTLIB data sets. SMP/E automatically specifies an initial disposition, which is based on the command being processed. For more information, see “SMPTLIB” on page 141.

PATH
identifies the name of the path to be allocated in the hierarchical file system. The name is not a complete pathname; it is a directory. This value is concatenated with the appropriate element or load module name to create a complete pathname.

The UCL operand is **PATH(***pathname***)**.

- PATH is mutually exclusive with all other DDDEF entry operands.
- PATH is meaningful only in a target zone DDDEF entry, because the information is used only for processing a target zone.
- The pathname can be from 1 to 255 characters.
- The pathname must begin and end with a slash (/).
- In addition to the required delimiters (/), a pathname must also be enclosed in single apostrophes (’) if any of the following is true:
  - The pathname contains lowercase alphabetic characters.
  - The pathname contains a character that is not uppercase alphabetic, numeric, national ($, #, or @), slash (/), plus (+), hyphen, period, or ampersand (&).
  - The pathname spans more than one line in the UCL control statement.

  The apostrophes must be outside the required delimiters, as in *’/pathname/’*, not */’pathname’/*.

  The single apostrophes used to enclose a pathname (the delimiters) do not count as part of the 255-character limit.

- Any apostrophes specified as part of a pathname (not the delimiters) must be doubled.

  Double apostrophes count as two characters in the 255-character limit.
- The pathname can include characters X'40' through X'FE'.
- Because symbolic substitution is not detected by SMP/E, it is not supported by SMP/E.

PROTECT

specifies that the z/OS SecureWay Security Server PROTECT option should be used when a new data set is first allocated. If **PROTECT** is specified and z/OS SecureWay Security Server is installed, the data set allocated by SMP/E will be protected by z/OS SecureWay Security Server.

You can also use PROTECT to indicate that an existing data set is protected by z/OS SecureWay Security Server. In this case, because SMP/E does not allocate the data set, it does not check the PROTECT indicator. However, you can use it to keep a record of which data sets have been protected with z/OS SecureWay Security Server.

The UCL operand is **PROTECT**.

- PROTECT is mutually exclusive with CONCAT, PATH, OLD, MOD, and SHR.

SPACE

specifies the primary and secondary space allocation for new data sets.

The UCL operand is **SPACE(***prime*,*second***)**.

- Each value must contain from 1 to 4 decimal digits, and the two values must be separated by a comma or a blank.
- SPACE is mutually exclusive with CONCAT, PATH, OLD, MOD, and SHR.

STORCLAS

specifies the name of a storage class used for allocating a new data set managed by SMS.

The UCL operand is **STORCLAS(***name***)**.

- The storage class name is defined by the storage administrator at your installation. This value can contain from 1 to 8 alphanumeric characters (A through Z and 0 through 9) or national characters (@, #, $) and must start with either an alphabetic or national character.
- You can specify this operand only if SMS manages your storage.
- Specify this operand only when you are allocating a new data set. SMS ignores this parameter if it is specified for an existing data set.
- This operand is mutually exclusive with PATH and CONCAT.

SYSOUT

specifies the output class for SYSOUT data sets.

The UCL operand is **SYSOUT(***value***)**.

- If you specify a class, it must be 1 alphabetic or numeric character (A through Z or 0 through 9).
- If you specify *, the output class depends on references to an OUTPUT JCL statement.
  - If there is an implicit or explicit reference to an OUTPUT JCL statement, the output is written to the same class as the CLASS parameter on the OUTPUT statement.

  - If there is no reference to an OUTPUT JCL statement, the output is written to the same class as the one specified as MSGCLASS on the JOB card.
- SYSOUT is mutually exclusive with BLOCK, CYLINDER, TRACK, CONCAT, PATH, and DATASET.
- You cannot specify SYSOUT for SMPTLIB data sets.

UNIT
specifies the UNIT type the data set resides on if it is not cataloged.

The UCL operand is **UNIT(***type***)**.

- If the data set is not cataloged, you must specify **UNIT** (unless it is not cataloged because of SMS). If you specify **UNIT** for a cataloged data set, it overrides the value in the catalog.
- The UNIT value can contain from 1 to 8 characters and should conform to standard UNIT naming conventions.

  SMP/E accepts any nonblank characters specified between the open and close parentheses, up to a maximum length of 8.
- UNIT is mutually exclusive with CONCAT and PATH.

VOLUME
specifies the volume serial number of the volume that the data set resides on if not cataloged.

The UCL operand is **VOLUME(***volid...***)**.

- If the data set is not cataloged, you must specify **VOLUME** (unless it is not cataloged because of SMS). If you specify **VOLUME** for a cataloged data set, it overrides the value in the catalog.
- The volume identifier can contain from 1 to 6 alphanumeric characters.
- For SMPTLIB data sets, you can specify up to five volume serial numbers. All the volumes must have the same UNIT type. For other data sets, you can specify only one volume serial number.
- VOLUME is mutually exclusive with CONCAT and PATH.

WAIT=YES or WAIT= NO
indicates whether SMP/E should wait for the data set to be allocated if the volume is not mounted or if the data set is already in use. Not waiting causes allocation to fail for the data set.

The UCL operand is **WAITFORDSN**.

- You can specify either **WAITFORDSN** or **WAIT**.
- WAIT is mutually exclusive with CONCAT and PATH.
- If you do not specify a value, the default is not to wait.
- WAIT is not related to the PROCESS parameter specified on the EXEC statement. PROCESS affects how long a job should wait for a data set before being run. For more information, see Chapter 10, “JCL Statements Required to Invoke SMP/E”.

LIST Examples

To list all the DDDEF entries in a particular zone, you can use the following commands:

```
SET      BDY(TGT1)          /* Set to requested target. */.
LIST     DDDEF              /* List all DDDEF entries.  */.
```

To list specific DDDEF entries in a particular zone, you can use these commands:

```
SET      BDY(TGT1)          /* Set to requested target. */.
LIST     DDDEF(SMPMTS       /* List only these three    */
               MACLIB       /* entries.                 */
               SYSLIB)      /*                          */.
```

The format of the LIST output for each DDDEF entry is the same for both of these commands. The only difference is the number of DDDEF entries listed.

Figure 18 and Figure 19 on page 184 are examples of LIST output for DDDEF entries.

```
PAGE nnnn  - NOW SET TO zzzzzz ZONE nnnnnnn  DATE mm/dd/yy TIME hh:mm:ss SMP/E 31.nn SMPLIST OUTPUT

TGT1          DDDEF ENTRIES


  NAME

AMACLIB   DATASET         = SYS1.AMACLIB
          VOLUME          = DLIB01
          UNIT            = 3380
          SHR

BPXLIB1   PATH            = '/path_name1/'

CMACLIB   DATASET         = SYS1.MACLIB
          SHR

MACLIB    DATASET         = SYS1.MACLIB
          OLD

SMPMTS    DATASET         = SYS1.SMPMTS
          OLD

SMPLOG    DATASET         = SYS1.SMPLOG
          MOD

SYSLIB    CONCAT          = SMPMTS    CMACLIB   AMACLIB

SMPOUT    SYSOUT          = A

SMPWRK1   UNIT            = SYSDA
          SPACE           = (25,25)
          DIR             = 25
          ALLOC           = TRK
          NEW
          DELETE

SMPWRK2   DATACLAS        = FB80CLAS
          MGMTCLAS        = SMPEMCLS
          STORCLAS        = SMPESCLS

SMPTLIB   VOLUME          = DLIB01    DLIB02    DLIB03
          UNIT            = 3380
```

Figure 18. DDDEF Entry: Sample LIST Output for a Target Zone

DDDEF Entry (Distribution, Target, and Global Zone)

```
PAGE nnnn  - NOW SET TO zzzzzz ZONE nnnnnnn  DATE mm/dd/yy TIME hh:mm:ss SMP/E 31.nn SMPLIST OUTPUT

GLOBAL        DDDEF ENTRIES


  NAME

SMPPTS    DATASET         = SYS1.SMPPTS
          OLD

SMPLOG    DATASET         = SYS1.GLOBAL.SMPLOG
          MOD

SMPOUT    SYSOUT          = A

SMPWRK1   UNIT            = SYSDA
          SPACE           = (25,25)
          DIR             = 25
          ALLOC           = TRK
          NEW
          DELETE

SMPWRK2   DATACLAS        = FB80CLAS
          MGMTCLAS        = SMPEMCLS
          STORCLAS        = SMPESCLS

SMPTLIB   VOLUME          = DLIB01    DLIB02    DLIB03
          UNIT            = 3380
          DSPREFIX        = C87MVSP
          PROTECT
```

Figure 19. DDDEF Entry: Sample LIST Output for a Global Zone

UNLOAD Examples

To dump the DDDEF entries in UCL format, you can use the UNLOAD command. To unload all the DDDEF entries in a particular zone, you can use the following commands:

```
SET      BDY(TGT1)          /* Set to requested target.   */.
UNLOAD   DDDEF              /* Unload all DDDEF entries.  */.
```

To unload specific DDDEF entries in a particular zone, you can use these commands:

```
SET      BDY(TGT1)          /* Set to requested target.   */.
UNLOAD   DDDEF(SMPMTS       /* Unload only these three    */
              MACLIB        /* entries.                   */
              SYSLIB)       /*                            */.
```

The format of the UNLOAD output for each DDDEF entry is the same for both of these commands. The only difference is the number of DDDEF entries unloaded.

Note: You can use the UNLOAD command only for target and distribution zones, not for the global zone.

Figure 20 on page 185 is an example of UNLOAD output for DDDEF entries.

```
UCLIN .
REP       DDDEF          ( AMACLIB  )
          DATASET        ( SYS1.AMACLIB                              )
          VOLUME         ( DLIB01 )
          UNIT           ( 3380    )
          SHR
                         .
REP       DDDEF          ( BPXLIB1  )
          PATH           ( '/path_name1/' )
                         .
REP       DDDEF          ( CMACLIB  )
          DATASET        ( SYS1.MACLIB                               )
          SHR
                         .
REP       DDDEF          ( MACLIB   )
          DATASET        ( SYS1.MACLIB                               )
          OLD
                         .
REP       DDDEF          ( SMPDATA1 )
          DATASET        ( MVSTGT1.SMPDATA1  )                       )
          MOD
                         .
REP       DDDEF          ( SMPDATA2 )
          DATASET        ( MVSTGT1.SMPDATA2  )                       )
          MOD
                         .
REP       DDDEF          ( SMPMTS   )
          DATASET        ( SYS1.SMPMTS                               )
          OLD
                         .
REP       DDDEF          ( SMPLOG   )
          DATASET        ( SYS1.SMPLOG                               )
          MOD
                         .
REP       DDDEF          ( SYSLIB   )
          CONCAT         ( SMPMTS    CMACLIB   AMACLIB  )
                         .
                         .
ENDUCL.
```

Figure 20. DDDEF Entry: Sample UNLOAD Output

UCLIN Examples

You can use the ADD, REP, and DEL UCL statements to change subentries in a DDDEF entry. When you use UCLIN to update a DDDEF entry, keep these points in mind:

- If a DEL statement deletes all the existing subentries in the entry, SMP/E deletes the entire entry.
- When SMP/E dynamically allocates a concatenation list, the order of the concatenation is the same as that specified in the DDDEF entry. Therefore, you cannot use ADD statements to update a DDDEF entry that already contains a concatenation list. SMP/E would not know the correct position for the new data.

  For example, suppose you have a DDDEF entry for the SYSLIB data set that concatenates SMPMTS and MACLIB. You **cannot** use the following commands to add XYZMACS at the end of the list:

```
SET      BDY(DLIB1)         /* Set to DLIB1 zone.    */.
UCLIN                       /*                       */.
ADD      DDDEF(SYSLIB)      /*                       */
         CONCAT(XYZMACS)    /*                       */.
ENDUCL                      /*                       */.
```

Instead, you can use these commands to replace the entire concatenation list:

```
SET      BDY(DLIB1)         /* Set to DLIB1 zone.    */.
UCLIN                       /*                       */.
REP      DDDEF(SYSLIB)      /*                       */
         CONCAT(SMPMTS,     /* Replace entire list.  */
                MACLIB,     /*                       */
                XYZMACS)    /*                       */.
ENDUCL                      /*                       */.
```

The following examples are provided to help you use the DDDEF entry.

Example 1: Defining Global Zone DDDEFs for Cataloged Data Sets

For this example, assume you want to define a DDDEF entry for the SMPPTS and SMPLOG. The data set names are SYS1.SMPPTS and SYS1.GLOBAL.SMPLOG, and both data sets are cataloged on the system that you are running on. Here is an example of how to define the DDDEF entries:

```
SET      BDY(GLOBAL)        /* Set to global zone.      */.
UCLIN                       /*                          */.
ADD      DDDEF(SMPPTS)      /* DDDEF for PTS.           */
         DA(SYS1.SMPPTS)    /* Data set is cataloged.   */
         OLD                /* DISP=OLD.                */
ADD      DDDEF(SMPLOG  )    /* DDDEF for LOG.           */
         DA(SYS1.SMPLOG)    /* Data set is cataloged.   */
         MOD                /* DISP=MOD.                */.
ENDUCL                      /*                          */.
```

Example 2: Defining DLIB Zone DDDEFs for Cataloged Data Sets

Assume you want SMP/E to dynamically allocate distribution libraries AOS12 and ASAMPLIB during ACCEPT. Assuming these libraries are cataloged on the system you are running SMP/E on, you can use the following commands to define the DDDEF entries:

```
SET      BDY(DLIB1)         /* Set to DLIB zone.        */.
UCLIN                       /*                          */.
ADD      DDDEF(AOS12)       /* DLIB ddname.             */
         DA(SYS1.AOS12)     /* Assume cataloged.        */
         OLD                /* OLD for update.          */.
ADD      DDDEF(ASAMPLIB)    /* DLIB ddname.             */
         DA(SYS1.ASAMPLIB)  /* Assume cataloged.        */
         OLD                /* OLD for update.          */.
ENDUCL                      /*                          */.
```

Note: Both data sets have a disposition of OLD. This is because these data sets are used for output when SMP/E calls the system utilities, and you want only one job to update the data sets at a time.

Example 3: Defining Target Zone DDDEFs for Cataloged Data Sets

Assume you want SMP/E to dynamically allocate data sets MODGEN, MACLIB, SMPMTS, and SMPLOG during APPLY. Assuming these data sets are cataloged on the system that you are running SMP/E on, you can use the following commands to define the DDDEF entries:

```
SET      BDY(TGT1)          /* Set to target zone.      */.
UCLIN                       /*                          */.
ADD      DDDEF(MODGEN  )    /* For concatenation.       */
```

```
         DA(SYS1.MODGEN)    /* Data set is cataloged.   */
         SHR                /* SHR for read.            */.
ADD      DDDEF(MACLIB  )    /* In case updated.         */
         DA(SYS1.MACLIB)    /* Data set is cataloged.   */
         OLD                /* OLD during update.       */.
ADD      DDDEF(SMPMTS  )    /* For update.              */
         DA(SYS1.SMPMTS)    /* Data set is cataloged.   */
         OLD                /* OLD for update.          */.
ADD      DDDEF(SMPLOG  )    /* For update.              */
         DA(SYS1.SMPLOG)    /* Data set is cataloged.   */
         MOD                /* MOD for log.             */.
ENDUCL                      /*                          */.
```

Note: MACLIB and SMPMTS have a disposition of OLD. This is because these data sets are used for output when SMP/E calls the system utilities, and you want only one job to update the data sets at a time.

Example 4: Defining a DDDEF for a Noncataloged Data Set

During APPLY processing, SMP/E may need to refer to some distribution library data sets not cataloged on the system that SMP/E is running on. For example, suppose AMODGEN is a distribution macro library not cataloged on the running system, and you want to use AMODGEN in the SYSLIB concatenation for assemblies. You can use the following commands to define the DDDEF entry:

```
SET      BDY(TGT1)          /* Set to target zone.      */.
UCLIN                       /*                          */.
ADD      DDDEF(AMODGEN )    /* For concatenation.       */
         DA(SYS1.AMODGEN)   /* Data set not cataloged.  */
         VOLUME(DLIB01)     /*                          */
         UNIT(3330-1)       /*                          */
         SHR                /* SHR for read.            */.
ENDUCL                      /*                          */.
```

Note: This data set has a disposition of SHR. This is because it is not updated during APPLY, but rather is used just for input.

Example 5: Defining a Concatenated DDDEF Entry

After you have defined DDDEF entries for all the data sets to be included in the SYSLIB concatenation, you can define the DDDEF entry that concatenates the data sets. This entry must specify the concatenation ddname and the order of concatenation. The ddname is the name of the DDDEF entry, and the order of concatenation is the order in which the DDDEF names are specified on the CONCAT operand.

You can use the following commands to define the DDDEF entry:

```
SET      BDY(TGT1)          /* Set to target zone.        */.
UCLIN                       /*                            */.
ADD      DDDEF(SYSLIB)      /* ddname for concatenation.  */
         CONCAT(            /* Concatenation order is     */
                SMPMTS      /* SMPMTS first,              */
                MACLIB      /* then MACLIB,               */
                MODGEN      /* then MODGEN,               */
                AMODGEN     /* then AMODGEN.              */
               )            /* End of list.               */.
ENDUCL                      /*                            */.
```

The SYSLIB concatenation is the same as if the following JCL were used:

```
//SYSLIB   DD DSN=SYS1.SMPMTS,DISP=OLD
//         DD DSN=SYS1.MACLIB,DISP=OLD
//         DD DSN=SYS1.MODGEN,DISP=OLD
//         DD DSN=SYS1.AMODGEN,DISP=SHR,
//            UNIT=3330-1,VOL=SER=DLIB01
```

Note: SYS1.MACLIB was allocated as DISP=OLD, even though it is not updated during APPLY processing. This is to limit access by any other job while SMP/E is running. If you wanted to use a disposition of SHR when MACLIB is part of the concatenation, you can use the following commands to define an additional DDDEF entry for MACLIB and change the SYSLIB DDDEF entry:

```
UCLIN                       /*                          */.
ADD      DDDEF(CMACLIB)     /* For read access.         */
         DA(SYS1.MACLIB)    /* Data set is cataloged.   */
         SHR                /* Change DISP to SHR.      */.
ADD      DDDEF(SYSLIB)      /* ddname for concatenation. */
         CONCAT(            /* concatenation order is   */
                SMPMTS      /* SMPMTS first,            */
                CMACLIB     /* ***** NOTE CHANGE *****  */
                MODGEN      /* then MODGEN,             */
                AMODGEN     /* then AMODGEN.            */
               )            /* End of list.             */.
ENDUCL                      /*                          */.
```

This corresponds to the following JCL:

```
//SYSLIB   DD DSN=SYS1.SMPMTS,DISP=OLD
//         DD DSN=SYS1.CMACLIB,DISP=SHR
//         DD DSN=SYS1.MODGEN,DISP=OLD
//         DD DSN=SYS1.AMODGEN,DISP=SHR,
//            UNIT=3330-1,VOL=SER=DLIB01
```

SYS1.MACLIB is now allocated with DISP=SHR so other jobs can still access it.

Example 6: Defining DDDEFs for Temporary Data Sets

Assume you want SMP/E to dynamically allocate the SMPOUT and SMPWRK1 data sets during ACCEPT. You can use the following commands to define the DDDEF entries:

```
SET      BDY(DLIB1)         /* Set to DLIB zone.          */.
UCLIN                       /*                            */.
ADD      DDDEF(SMPOUT)      /* SMPOUT ddname.             */
         SYSOUT(A)          /* SYSOUT class.              */.
ADD      DDDEF(SMPWRK1)     /* SMPWRK1 ddname.            */
         NEW                /* New data set.              */
         DELETE             /* Delete when finished.      */
         TRACKS             /* Allocate in tracks.        */
         SPACE(25,25)       /* prime and secondary space. */
         DIR(25)            /* 25 directory blocks.       */
         UNIT(SYSDA)        /* Allocate on SYSDA.         */.
ADD      DDDEF(SMPWRK2)     /* SMPWRK2 ddname.            */
         DATACLAS(FB80CLAS) /* Add DATACLAS name.         */
         MGMTCLAS(SMPEMCLS) /* Add MGMTCLAS name.         */
         STORCLAS(SMPESCLS) /* Add STORCLAS name.         */
ENDUCL                      /*                            */.
```

Example 7: Defining a Global Zone DDDEF for SMPTLIB Data Sets

Assume you want SMP/E to dynamically allocate the SMPTLIB data sets when it receives SYSMODs packaged in relative files. In addition, you want these data sets to be protected by z/OS SecureWay Security Server. You can use the following commands to define the DDDEF entry:

```
SET      BDY(GLOBAL)        /* Set to global zone.        */.
UCLIN                       /*                            */.
ADD      DDDEF(SMPTLIB)     /* SMPTLIB ddname.            */
         DATACLAS(FB80CLAS) /* Add DATACLAS name.         */
         DSPREFIX(C87MVSP)  /* Data set prefix.           */
         MGMTCLAS(SMPEMCLS) /* Add MGMTCLAS name.         */
```

```
        STORCLAS(SMPESCLS) /* Add STORCLAS name.         */
        PROTECT            /* Request SecureWay Security */
                           /* Server protection.         */.
ENDUCL                     /*                            */.
```

Note: No initial or final disposition is specified. This is because when SMP/E dynamically allocates SMPTLIB data sets, it automatically specifies the initial and final disposition based on the command it is processing.

Example 8: Defining a DLIB Zone DDDEF for SMPTLIB Data Sets

Assume you want SMP/E to dynamically allocate the SMPTLIB data sets when it accepts SYSMODs packaged in relative files. You can use the following commands to define the DDDEF entry:

```
SET     BDY(DLIB1)         /* Set to DLIB zone.        */.
UCLIN                      /*                          */.
ADD     DDDEF(SMPTLIB)     /* SMPTLIB ddname.          */
        VOLUME(DLIB01      /* Volumes used - DLIB01    */
               DLIB02      /* DLIB02                   */
               DLIB03)     /* DLIB03.                  */
        UNIT(3380)         /* Allocate on 3380.        */.
ENDUCL                     /*                          */.
```

Note: No initial or final disposition is specified. This is because when SMP/E dynamically allocates SMPTLIB data sets, it automatically specifies the initial and final disposition based on the command it is processing.

Example 9: Protecting Data Sets

Assume you have previously defined your SMPMTS and SMPSTS data sets outside of SMP/E and protected them with z/OS SecureWay Security Server. You now want to have these dynamically allocated, and you also want to keep a record that they are protected by z/OS SecureWay Security Server. You can use the following commands to define the DDDEF entries:

```
SET     BDY(TGT1)          /* Set to target zone.                  */.
UCLIN                      /*                                      */.
ADD     DDDEF(SMPMTS)      /* SMPMTS ddname.                       */
        DA(SYS1.SMPMTS)    /* Data set is cataloged.               */
        OLD                /* OLD for update.                      */
        PROTECT          /* Protected by SecureWay Security Server.*/.
ADD     DDDEF(SMPSTS)      /* SMPSTS ddname.                       */
        DA(SYS1.SMPSTS)    /* Data set is cataloged.               */
        OLD                /* OLD for update.                      */
        PROTECT          /* Protected by SecureWay Security Server.*/.
ENDUCL                     /*                                      */.
```

Example 10: Defining Pathnames in a Hierarchical File System

Assume a product you plan to add to your system contains load modules and elements that will reside in a hierarchical file system (HFS). You want to have the pathnames dynamically allocated instead of having DD statements for them in a cataloged procedure. You can use the following commands to define the DDDEF entry for each pathname:

```
----+----1----+----2----   ...   ----5----+----6----+----7--
SET     BDY(TGT1)            /* Set to target zone.      */.
UCLIN                        /*                          */.
ADD     DDDEF(BPXLIB1)       /* Specify DDDEF name.      */
        PATH('/path_name1/') /* Define pathname.         */
                             /*                          */.
ADD     DDDEF(BPXLIB2)       /* Specify DDDEF name.      */
        PATH('/path_name2/This/pathname/is/an/example/of/a/
very/long/pathname/It/shows/a/long/name/')
```

```
                                        /* define pathname.        */
                                        /*                         */.
                ENDUCL                  /*                         */.
```

DLIB Entry (Distribution and Target Zone)

The DLIB entry describes a distribution library that was totally copied to a target library. It is created during JCLIN processing when SMP/E encounters a COPY statement without any SELECT statements. The INDD value on the COPY statement becomes the name of the DLIB entry, and the OUTDD value on the COPY statement becomes the SYSLIB value in the DLIB entry. For additional information, see the "Processing" section of the JCLIN command chapter in *SMP/E Commands*.

SMP/E uses the DLIB entry to determine where elements and load modules should be applied, as follows:

- **Element entries other than MOD.** If there is no SYSLIB value either in the element entry or on the element MCS, SMP/E looks for a DLIB entry whose name matches the DISTLIB value for the element. SMP/E applies the element to the library indicated by the SYSLIB value in the DLIB entry, and adds that SYSLIB value to the element entry.
- **MOD entries.** For MOD entries, processing is slightly different, because MOD entries do not contain a SYSLIB subentry.
  - For a MOD entry that points to an LMOD entry, SMP/E checks whether the DISTLIB value in the MOD entry matches the name of a DLIB entry. If there is a match, and if the SYSLIB value in the DLIB entry is different from the ones in the LMOD entry, the SYSLIB value in the DLIB entry is used in addition to the LMOD's SYSLIB values.
  - For a MOD entry that does not point to an LMOD entry, SMP/E checks whether the DISTLIB value in the MOD entry matches the name of a DLIB entry. If there is a match, SMP/E assumes a load module with the same name as the MOD entry should exist in the library specified by the SYSLIB value in the DLIB entry.
    - If there is already an LMOD entry with the same name as the MOD entry, and that LMOD entry does not already contain two SYSLIB values, SMP/E adds the SYSLIB value from the DLIB entry to the LMOD entry.
    - If there is no LMOD entry with the same name as the MOD entry, SMP/E creates one and adds the SYSLIB value from the DLIB entry to the LMOD entry.

    Lastly, SMP/E updates the MOD entry by adding an LMOD subentry for the LMOD entry that was updated or created.

Subentries

These are the subentries for the DLIB entry as they appear in the LIST output:

name
: is the name of the distribution library represented by the DLIB entry.

  The name can contain from 1 to 8 alphanumeric characters.

LASTUPD
: identifies the cause of the last change to this DLIB entry.

  The UCL operand is **LASTUPD**(*value*). This subentry can contain one of the following values:

  JCLIN
  : indicates that the change was made during JCLIN command processing.

UCLIN
indicates that the change was made as a result of UCLIN processing.

sysmod_id
indicates that the change was made during the installation of the indicated SYSMOD.

The SYSMOD ID must contain 7 alphanumeric characters.

LASTUPD TYPE
indicates how the entry was last changed.

The UCL operand is **LASTUPDTYPE(***value***)**. This subentry can contain one of the following values:
ADD The entry has been added.
UPD The entry has been updated.

SYSTEM LIBRARIES
identifies the ddnames of the target libraries into which the distribution library should be copied.

The UCL operand is **SYSLIB(***ddname*...**)**.

- A DLIB entry used for modules can contain one or two SYSLIB values.
- A DLIB entry used for macros, source, or data elements should contain only one SYSLIB value.
- The ddnames can contain from 1 to 8 alphanumeric characters.

LIST Examples

To list all the DLIB entries in a particular zone, you can use the following commands:

```
SET      BDY(TGT1)          /* Set to requested zone.   */.
LIST     DLIB               /* List all DLIB entries.   */.
```

To list specific DLIB entries, you can use these commands:

```
SET      BDY(TGT1)          /* Set to requested zone.   */.
LIST     DLIB(AMACLIB       /* List only these two      */
              MACDLB01)     /* entries.                 */.
```

The format of the LIST output for each DLIB entry is the same for both of these commands. The only difference is the number of DLIB entries listed. Figure 21 on page 193 is an example of LIST output for DLIB entries.

```
PAGE nnnn  - NOW SET TO zzzzzz ZONE nnnnnnn  DATE mm/dd/yy TIME hh:mm:ss SMP/E 31.nn SMPLIST OUTPUT

TGT1          DLIB ENTRIES


  NAME

AMACLIB   SYSTEM LIBRARY  = MACLIB

MACDLB01  SYSTEM LIBRARY  = MACLIB    MACTGT01

MODDLB01  LASTUPD         = JXY1102 TYPE=ADD
          SYSTEM LIBRARY  = LPALIB    MODTGT01

MODDLB02  LASTUPD         = JXY1121 TYPE=UPD
          SYSTEM LIBRARY  = LPALIB    MODTGT02
```

Figure 21. DLIB Entry: Sample LIST Output

UNLOAD Examples

To dump the DLIB entries in UCL format, you can use the UNLOAD command. To unload all the DLIB entries in a particular zone, you can use the following commands:

```
SET      BDY(TGT1)          /* Set to requested zone.   */.
UNLOAD   DLIB               /* Unload all DLIB entries. */.
```

To unload specific DLIB entries, you can use these commands:

```
SET      BDY(TGT1)          /* Set to requested zone.   */.
UNLOAD   DLIB(AMACLIB       /* Unload only these two    */
              MACDLB01)     /* entries.                 */.
```

The format of the UNLOAD output for each DLIB entry is the same for both of these commands. The only difference is the number of DLIB entries listed. Figure 22 is an example of UNLOAD output for DLIB entries.

```
UCLIN .
REP       DLIB            ( AMACLIB  )
          SYSLIB          ( MACLIB   )
                          .
REP       DLIB            ( MACDLB01 )
          SYSLIB          ( MACLIB    MACTGT01 )
                          .
REP       DLIB            ( MODDLB01 )
          LASTUPD         ( JXY1102 )
          LASTUPDTYPE     ( ADD )
          SYSLIB          ( LPALIB    MODTGT01 )
                          .
REP       DLIB            ( MODDLB02 )
          LASTUPD         ( JXY1121  )
          LASTUPDTYPE     ( UPD )
          SYSLIB          ( LPALIB    MODTGT02 )
                          .
ENDUCL.
```

Figure 22. DLIB Entry: Sample UNLOAD Output

UCLIN Examples

You can use the ADD, REP, and DEL UCL statements to change subentries in the DLIB entry. When you use UCLIN to update a DLIB entry, keep these points in mind:

- After the UCLIN changes are made, the DLIB entry must contain at least a SYSLIB subentry. Otherwise, there is not enough information in the entry to indicate where elements should be installed.
- If a DEL statement deletes all the existing subentries in the entry, SMP/E deletes the entire entry.

Example: Changing the Destination of a Copied Library

Assume you are doing a system generation and have completed the following steps:

1. Performed stage 1 system generation
2. Allocated new target zone
3. Copied distribution zone to new target zone
4. Ran SMP/E JCLIN command

You now want to change the target library into which a module distribution library has been totally copied. Assume that the DLIB was MODDLB01, that it was previously copied to LINKLIB, and that it is now copied to LPALIB. You can do this with the following UCL statements:

```
SET      BDY(TGT1)          /* Set to target zone.      */.
UCLIN                       /*                          */.
REP      DLIB(MODDLB01)     /* Module DLIB.             */
         SYSLIB(LPALIB)     /* Now copied to LPALIB.    */
                            /* No longer in LINKLIB.    */.
ENDUCL                      /*                          */.
```

If the modules should **also** be copied into LPALIB, the following UCL can be used:

```
SET      BDY(TGT1)          /* Set to target zone.        */.
UCLIN                       /*                            */.
ADD      DLIB(MODDLB01)     /* Module DLIB.               */
         SYSLIB(LPALIB)     /* Now copied to LPALIB.      */
                            /* SYSLIB added, not replaced.*/.
ENDUCL                      /*                            */.
```

In both cases, you must take care of copying the modules from the distribution library. SMP/E does not process elements when it records UCL changes.

Now that the UCL changes are made, when SMP/E installs SYSMODs that update MODDLB01, SMP/E checks the DLIB entry for MODDLB01, determines that the modules are copied to LPALIB, and creates or modifies the LMOD entries (with the same name as the MOD entries) to indicate a copy to LPALIB.

Note: This technique works before you actually install any service. If you want to change (not add) another library in the DLIB copy list, you must find all the MOD, MAC, SRC, and LMOD entries with a SYSLIB value matching the old target library, and then change that value using UCLIN. If you do not do this, SMP/E continues to copy entries with the old SYSLIB value to the old library (and also, in some cases, to the new library).

DLIBZONE Entry (Distribution Zone)

The DLIBZONE entry contains information SMP/E uses to process a specific distribution zone and the associated distribution libraries. It is created by UCLIN and must be defined before you can do any other processing for that distribution zone.

Subentries

These are the subentries for the DLIBZONE entry as they appear in the LIST output:

name
is the name of the distribution zone. You assign the name when the zone is created.

The name can contain from one to seven alphanumeric characters (A through Z, 0 through 9) or national characters ($, #, @). The first character must be alphabetic.

ACCJCLIN
indicates that JCLIN is to be saved in the distribution zone whenever a SYSMOD containing inline JCLIN is accepted.

The UCL operand is **ACCJCLIN**.

- **ACCJCLIN** should be specified only for zones in which all the products have been installed with SMP/E Release 3, or later.
- To save inline JCLIN for a product at ACCEPT time, you must first accept that product using SMP/E Release 3, or later, and have ACCJCLIN set in the DLIBZONE entry. From then on, you must keep ACCJCLIN set in the DLIBZONE entry. This ensures that any time you accept service for that product, its JCLIN is updated in the distribution zone. For more information, see the section on inline JCLIN in the ACCEPT command chapter of the *SMP/E Commands* manual.

OPTIONS
is the name of the OPTIONS entry in the global zone that should be used when processing this distribution zone. For more information, see “OPTIONS Entry (Global Zone)” on page 265.

The UCL operand is **OPTIONS**(*name***(**.

- The name can contain from one to eight alphanumeric characters.
- This name can be overridden by using the OPTIONS parameter on the SET command. For more information on the SET command, see the *SMP/E Commands* manual.
- If no OPTIONS entry name is specified, SMP/E uses a set of default utility values when processing this distribution zone. For more information, see “OPTIONS Entry (Global Zone)” on page 265.

RELATED
is the name of the target zone to which this distribution zone is related. A distribution zone is related to the target zone that was built from these distribution libraries, such as during system generation.

The UCL operand is **RELATED**(*zone***(**.

- The zone name can contain from one to seven alphanumeric characters.
- Although the entry can be defined without this subentry, you **must** define the subentry before you can install any SYSMODs into the distribution libraries.

SREL
lists the system releases to be supported within this distribution zone.

The UCL operand is **SREL**(*srel*...**(**.

- The SREL must contain four alphanumeric characters, usually one alphabetic character followed by three numeric characters. These are the SRELs defined by IBM:

System	SREL
DB2	P115
CICS	C150
IMS	P115
MVS	Z038
NCP	P004

- Although the entry can be defined without this subentry, you **must** define the subentry before you can install any SYSMODs in the distribution libraries.

Note: Although you can support multiple products with different SREL values from one distribution zone, those products are still subject to all other restrictions related to combining products in one zone. The most common reason for not being able to combine products is common element names. For example, modules or macros with the same name are found in both products, but reside in different libraries.

ZDESC
is a user-written description for this zone.

The UCL operand is **ZONEDESCRIPTION**(*text***(**.

- The zone description can be in single-byte characters (such as English alphanumeric characters) or in double-byte characters (such as Kanji).
- The zone description can contain up to 500 bytes of data, including blanks. (For double-byte data, the 500-byte maximum includes all shift-in and shift-out characters, as well as the double-byte characters.) Extra blanks are deleted. All data beyond column 72 is ignored, including blanks.
- The zone description cannot be only blanks.
- If parentheses are included in the text, they must be in matched pairs.

LIST Examples

To list the DLIBZONE entry for a particular distribution zone, you can use the following commands:

```
SET      BDY(DLIB1)         /* Set to requested DLIB.   */.
LIST     DLIBZONE           /* List DLIBZONE entry.     */.
```

Figure 23 on page 197 is an example of LIST output for a DLIBZONE entry.

```
PAGE nnnn  - NOW SET TO zzzzzz ZONE nnnnnnn  DATE mm/dd/yy TIME hh:mm:ss SMP/E 31.nn SMPLIST OUTPUT

DLIB1         DZONE ENTRY


  NAME

DLIB1     DZONE           = DLIB1
          ZDESC           = ZONE DESCRIPTION FOR DLIB1 ZONE
          RELATED         = TGT2
          SREL            = Z038
          OPTIONS         = OPTDLIB2
          ACCJCLIN
```

Figure 23. DLIBZONE Entry: Sample LIST Output

UCLIN Examples

You can use the ADD, REP, and DEL UCL statements to change subentries in the DLIBZONE entry. When you use UCLIN to update a DLIBZONE entry, remember that if a DEL statement deletes all the existing subentries in the entry, SMP/E deletes the entire entry.

The following examples are provided to help you use the DLIBZONE entry.

Example 1: Defining a DLIBZONE Entry

Assume you are about to add a new function to your system and want to define a separate distribution zone for it named DLIB2. The OPTIONS entry you plan to use is OPTDLIB2, and the SREL for the SYSMOD is Z038. The distribution zone is in data set SMPE.SMPCSI.CSI. After installing the function in the distribution libraries, you plan to do a system generation to build a set of target libraries. The target zone for those libraries is TGT2. The following UCLIN can be used to define the new zone.

```
SET      BDY(GLOBAL)        /* Set to global zone.      */.
UCLIN                       /* UCLIN for GZONE entry    */.
ADD      GZONE              /* to set up                */
         ZONEINDEX(         /* index for new zone.      */
                   (DLIB2,SMPE.SMPCSI.CSI,DLIB) /*      */
                  )         /*                          */
                            /*                          */.
ENDUCL                      /* End global zone update.  */.

SET      BDY(DLIB2)         /* Now define new zone.     */.
UCLIN                       /* UCLIN to define it.      */.
ADD      DLIBZONE(DLIB2)    /* Identify name.           */
         OPTIONS(OPTDLIB2)  /* OPTIONS entry to use.    */
         SREL(Z038)         /* SREL for MVS.            */
         RELATED(TGT2)      /* For this tgt library.    */
         ZDESC(
               THIS DISTRIBUTION ZONE IS FOR
               SREL Z038
              )             /* Zone description.        */
                            /*                          */.
ENDUCL                      /*                          */.
```

Note: Even if the OPTIONS entry or TARGETZONE entry has not yet been defined, you can still refer to it in the DLIBZONE entry. However, you must create the entry before you process this distribution zone. For examples of defining OPTIONS entries, see “OPTIONS Entry (Global Zone)” on page 265

page 265. For examples of defining TARGETZONE entries, see "TARGETZONE Entry (Target Zone)" on page 314.

Example 2: Formatting a Zone Description

Assume you enter the following zone description with the first line ending in column 72 and the second line starting in column 1:

```
----+----1----+----2----  ...  ----5----+----6----+----7--
SET      BDY(DLIB1)         /* Set to DLIB zone.        */.
UCLIN                       /* UCLIN for DZONE entry    */.
ADD      DZONE(DLIB1)       /* to set up.               */
         ZDESC(                THIS IS THE DESCRIPTION FOR
THE DLIB1 ZONE)
                            /* End of zone description. */.
ENDUCL                      /* End DLIB zone update.    */.
```

Because there is no blank between the word ending in column 72 and the next word starting in column 1, SMP/E runs the two together.

The words in a zone description, even words that end in column 72, must be separated by blanks. To format the zone description in this example correctly, you can put a blank at the beginning of the second line:

```
----+----1----+----2----  ...  ----5----+----6----+----7--
SET      BDY(DLIB1)         /* Set to DLIB zone.        */.
UCLIN                       /* UCLIN for DZONE entry    */.
ADD      DZONE(DLIB1)       /* to set up.               */
         ZDESC(                THIS IS THE DESCRIPTION FOR
 THE  DLIB1 ZONE)
                            /* End of zone description. */.
ENDUCL                      /* End DLIB zone update.    */.
```

Because there is a blank explicitly coded between the word ending in column 72 and the word starting in column 1, SMP/E does not run the words together.

FEATURE Entry (Global Zone)

The FEATURE entry describes a collection of function SYSMODS called a feature. An SMP/E feature may be associated with an orderable software feature.

Subentries

name
is the name of this feature.

DESCRIPTION
describes the software feature.

The UCL operand is **DESCRIPTION(***description***)**.

FMID
specifies the FMIDs that make up this software feature. There can be multiple FMID subentries associated with a single feature.

The UCL operand is **FMID**(*fmid,...***)**.

PRODUCT
identifies the product with which this feature is associated.

The UCL operand is **PRODUCT(***prodid,vv.rr.mm***)**.

RECDATE
specifies the date on which the feature was received.

There is no UCL support for this subentry.

RECTIME
specifies the time at which the feature was received.

There is no UCL support for this subentry.

UCLDATE
specifies the date on which the feature was last processed using the UCLIN command.

There is no UCL support for this subentry.

UCLTIME
specifies the time at which the feature was last processed using the UCLIN command.

There is no UCL support for this subentry.

REWORK
identifies the level of this feature, which was received again for minor changes.

There is no UCL support for this subentry.

LIST Examples

To list all the FEATURE entries in a particular zone, you can use the following commands:

```
SET      BDY(GLOBAL)        /* Set to global zone.      */.
LIST     FEATURE            /* List all FEATURE entries.*/.
```

To list specific FEATURE entries, you can use these commands:

```
SET      BDY(GLOBAL)        /* Set to global zone.      */.
LIST     FEATURE(OS3250BA   /* List only these two      */
                 OS3250LD)  /* entries.                 */.
```

FEATURE Entry (Global Zone)

The format of the LIST output for each FEATURE entry is the same for both of these commands. The only difference is the number of FEATURE entries listed. Figure 24 shows an example of LIST output for FEATURE entries. FEATURE entries are listed alphanumerically by name.

```
PAGE nnnn  - NOW SET TO zzzzzz ZONE nnnnnnn  DATE mm/dd/yy TIME hh:mm:ss SMP/E 31.nn SMPLIST OUTPUT

GLOBAL  FEATURE  ENTRIES


  NAME

OS3250BA  DESCRIPTION     = OS/390 Base
          DATE/TIME REC   = 01.267  12:55:39
                    UCL   = 01.031  02:25:45
          PRODUCT         = 5647-A01  02.05.00
          FMID            = HBB6605   HMP1B00

OS3250DD  DESCRIPTION     = OpenEdition DCE User Privacy DES
          DATE/TIME REC   = 01.267  12:55:41
                    UCL   = 01.031  02:25:45
          PRODUCT         = 5647-A01  02.05.00
          FMID            = JMB3125

OS3250LD  DESCRIPTION     = Language Environment Decryption
          DATE/TIME REC   = 01.267  12:55:42
                    UCL   = 01.031  02:25:45
          PRODUCT         = 5647-A01  02.05.00
          FMID            = JMWL755
```

Figure 24. FEATURE Entry: Sample LIST Output

By specifying the FORFMID operand, you can reduce the number of FEATURE entries listed. When FORFMID is specified, SMP/E lists a FEATURE entry only if its FMID matches one of the FMIDs specified on the FORFMID operand. For example, to list FEATURE entries whose FMIDs either are defined in FMIDSET ZOSSET or are HMP1D00, you can use these commands:

```
SET      BDY(GLOBAL)        /* Set to global zone.      */.
LIST     FEATURE            /* List all FEATURE entries */
         FORFMID(ZOSSET      /* for the ZOSSET FMIDSET    */
                 HMP1D00)   /* and FMID HMP1D00.        */.
```

UCLIN Examples

You can use the ADD, REP, and DEL UCL statements to change subentries in the FEATURE entry. When you use UCLIN to update a FEATURE entry, keep in mind that after the UCLIN changes are made, the FEATURE entry must contain at least the DESCRIPTION and PRODUCT subentries.

Example: Adding a FEATURE Entry

Assume you have a feature, named Sample Feature, for which you wish to create a description and put in an entry named SAMPFEAT. You could set up a FEATURE entry as follows:

```
SET BDY(GLOBAL)                    /* Set to global zone        */.
UCLIN                              /* Start UCLIN processing    */.
  ADD FEATURE(SAMPFEAT)            /* Identify the feature:     */
      DESCRIPTION(Sample Feature)  /* - Name                    */
      PRODUCT(1234-ABC,02.05.00)   /* - Owning product          */
      FMID(XYZ1234)                /* - FMID                    */.
ENDUCL                             /* End UCLIN processing      */.
```

FMIDSET Entry (Global Zone)

The FMIDSET entry defines a group of FMIDs for use in limiting the SYSMODs processed by an SMP/E command. For example, you can specify an FMIDSET on the FORFMID operand of the APPLY command to process only SYSMODs applicable to one of the FMIDs in the FMIDSET.

Subentries

These are the subentries for the FMIDSET entry as they appear in the LIST output:

name
is the name of the FMIDSET.

The name can contain from 1 to 8 alphanumeric characters.

FMID
lists the function SYSMODs (that is, FMIDs) that are to be part of this FMIDSET.

The UCL operand is **FMID(***sysmod_id*...**)**.

The SYSMOD ID must contain 7 alphanumeric characters.

LIST Examples

To list all the FMIDSET entries in a global zone, you can use the following commands:

```
SET      BDY(GLOBAL)        /* FMIDSET in global only.    */.
LIST     FMIDSET            /* list all FMIDSET entries.  */.
```

To list specific FMIDSET entries in a global zone, you can use these commands:

```
SET      BDY(GLOBAL)        /* FMIDSET in global only.    */.
LIST     FMIDSET(ALLSET     /* List only these two        */
                 XXSET)     /* entries.                   */.
```

The format of the LIST output for each FMIDSET entry is the same for both of these commands. The only difference is the number of FMIDSET entries listed.

Figure 25 is an example of LIST output for FMIDSET entries.

```
PAGE nnnn  - NOW SET TO zzzzzz ZONE nnnnnnn  DATE mm/dd/yy TIME hh:mm:ss SMP/E 31.nn SMPLIST OUTPUT

GLOBAL        FMIDSET ENTRIES


  NAME

ALLSET    FMID            = FXX1102   JXX1121   JXX1122   JXX1123
                            FYY1102   JYY1121   JYY1122   JYY1123
                            FZZ1102   JZZ1121   JZZ1122   JZZ1123

XXSET     FMID            = FXX1102   JXX1121   JXX1122   JXX1123

YYSET     FMID            = FYY1102   JYY1121   JYY1122   JYY1123

ZZSET     FMID            = FZZ1102   JZZ1121   JZZ1122   JZZ1123
```

Figure 25. FMIDSET Entry: Sample LIST Output

UCLIN Examples

You can use the ADD, REP, and DEL UCL statements to change subentries in an FMIDSET entry. When you use UCLIN to update an FMIDSET entry, keep these points in mind:

- After the UCLIN changes are made, the FMIDSET entry must contain at least an FMID subentry. Otherwise there is not enough information in the entry for SMP/E to use the entry.
- If a DEL statement deletes all the existing subentries in the entry, SMP/E deletes the entire entry.

The following examples are provided to help you use the FMIDSET entry.

Example 1: Defining an FMIDSET Entry

Assume you have four function SYSMODs installed, JXX1102, JXX1121, JXX1122, and JXX1123, and that when installing service you would like to be able to install just the PTFs for these products. You could set up an FMIDSET entry as follows:

```
SET      BDY(GLOBAL)        /* FMIDSETs only in global. */.
UCLIN                       /*                          */.
ADD      FMIDSET(XXSET)     /* Define FMIDSET name.     */
         FMID(FXX1102       /* Define function SYSMODs  */
              JXX1121       /* to be part of set.       */
              JXX1122       /*                          */
              JXX1123)      /*                          */
                            /*                          */.
ENDUCL                      /*                          */.
```

You can use the FORFMID operand on the APPLY as follows:

```
SET      BDY(TGT1)          /* Set for APPLY to TGT1.   */.
APPLY    FORFMID(XXSET)     /* Apply XX PTFs.           */.
```

Example 2: Modifying an FMIDSET Entry

Once an FMIDSET has been defined, it can be modified as new function SYSMODs are installed or as existing function SYSMODs are replaced. For example, starting with the FMIDSET from the previous example, assume you install a new feature, JXX1124, that deletes JXX1121, and that you want to modify the FMIDSET definition. You can do this as follows:

```
SET      BDY(GLOBAL)        /* FMIDSETs only in global. */.
UCLIN                       /*                          */.
REP      FMIDSET(XXSET)     /* Define FMIDSET name.     */
         FMID(FXX1102       /* Define function SYSMODs. */
                            /* JXX1121 left out.        */
              JXX1122       /*                          */
              JXX1123       /*                          */
              JXX1124)      /* JXX1124 added.           */
                            /*                          */.
ENDUCL                      /*                          */.
```

You can also do the following:

```
SET      BDY(GLOBAL)        /* FMIDSETs only in global. */.
UCLIN                       /*                          */.
DEL      FMIDSET(XXSET)     /* Define FMIDSET name.     */
         FMID(JXX1121)      /* Delete JXX1121 from set. */
                            /*                          */.
ADD      FMIDSET(XXSET)     /* Define FMIDSET name.     */
         FMID(JXX1124)      /* Add new FMID.            */
                            /*                          */.
ENDUCL                      /*                          */.
```

The result in both cases is the same. The choice of which method to use most likely depends on the number of FMIDs defined in the FMIDSET.

GLOBALZONE Entry (Global Zone)

The GLOBALZONE entry contains processing-related information for SMP/E. It is also used by SMP/E as an index to target and distribution zones, either in the same CSI or a different CSI data set. The GLOBALZONE entry is created by UCLIN and must be defined before you can do any other processing for that global zone.

Subentries

These are the subentries for the GLOBALZONE entry as they appear in the LIST output:

FMID
lists the function SYSMODs for which SMP/E is to receive service.

The UCL operand is **FMID(***sysmod_id*...**)**.

The SYSMOD ID must contain seven alphanumeric characters.

OPTIONS
is the name of the OPTIONS entry in the global zone that should be used in processing this global zone. For more information, see “OPTIONS Entry (Global Zone)” on page 265.

The UCL operand is **OPTIONS(***name***)**.

- The name can contain from one to eight alphanumeric characters.
- This name can be overridden by using the OPTIONS parameter on the SET command. For more information on the SET command, see the *SMP/E Commands* manual.
- If no OPTIONS entry name is specified, SMP/E uses a set of default utility values when processing the global zone. For more information, see “OPTIONS Entry (Global Zone)” on page 265.

SREL
lists the system releases to be supported in this global zone.

The UCL operand is **SREL(***srel*...**)**.

The SREL must contain four alphanumeric characters, usually one alphabetic character followed by three numerics. These are the SRELs defined by IBM:

System	SREL
DB2	P115
CICS	C150
IMS	P115
MVS	Z038
NCP	P004

Note: Although you can support multiple products with different SREL values from one global zone, those products are still subject to all other restrictions related to combining products in one zone. The most common reason for not being able to combine products is common element names. For example, modules or macros with the same name are found in both products, but reside in different libraries.

ZDESC
is a user-written description for this zone.

The UCL operand is **ZONEDESCRIPTION(***text***)**.

- The zone description can be in single-byte characters (such as English alphanumeric characters) or in double-byte characters (such as Kanji).

- The zone description can contain up to 500 bytes of data, including blanks. (For double-byte data, the 500-byte maximum includes all shift-in and shift-out characters, as well as the double-byte characters.) Extra blanks are deleted. All data beyond column 72 is ignored, including blanks.
- The zone description cannot be only blanks.
- If parentheses are included in the text, they must be in matched pairs.

ZONEINDEX
identifies all the target zones and distribution zones associated with this global zone. This list is used by SMP/E to determine the data set in which the zone resides and the type of zone.

For ADD and REP statements, the UCL operand is **ZONEINDEX((***name*,*dsn*,*type***)...)**.

For DEL statements, the UCL operand is **ZONEINDEX((***name***)...)**.

- **ZONEINDEX** can also be specified as **ZINDEX**.
- *name* is the name of the zone. The name can contain from one to seven alphanumeric characters (A through Z, 0 through 9) or national characters ($, #, @). The first character must be alphabetic.
- *dsn* is the fully qualified name of the data set in which the zone resides.
- *type* is the zone type, either TARGET or DLIB.

The ZONEINDEX is only a pointer to a zone. Changes you make to a ZONEINDEX do not affect the associated zone. Therefore, you cannot add, rename, or delete a zone by simply adding, replacing, or deleting its ZONEINDEX. However, these are some other commands you can use:

- **Adding a zone:** To add a zone, you can use the following commands, depending on the particular situation:
  - UCLIN to add a ZONEINDEX, then UCLIN to define the DZONE or TZONE entry
  - ZONECOPY
  - ZONERENAME
  - ZONEEXPORT, UCLIN for the ZONEINDEX, and ZONEIMPORT
- **Renaming a zone:** To rename a zone, you must use the following command:
  - ZONERENAME
- **Deleting a zone:** To delete a zone, you can use the following commands, depending on the particular situation:
  - ZONEDELETE
  - ZONEEXPORT

For more information about any of these commands, see the chapter on that command.

LIST Examples

To list all the GLOBALZONE entry, you can use the following commands:

```
SET      BDY(GLOBAL)        /* Set to global zone.      */.
LIST     GLOBALZONE         /* List GLOBALZONE entry.   */.
```

Figure 26 is an example of LIST output for a GLOBALZONE entry.

GLOBALZONE Entry (Global Zone)

```
PAGE nnnn  - NOW SET TO zzzzzz ZONE nnnnnnn  DATE mm/dd/yy TIME hh:mm:ss SMP/E 31.nn SMPLIST OUTPUT

GLOBAL        GZONE ENTRY


  NAME

GLOBAL    ZONEINDEX       = TGT1      TARGET   SYS1.TGT.SMPCSI.CSI
                            TGT2      TARGET   SYS1.TGT.SMPCSI.CSI
                            DLIB1     DLIB     SYS1.DLIB.SMPCSI.CSI
                            DLIB2     DLIB     SYS1.DLIB.SMPCSI.CSI
          ZDESC           = ZONE DESCRIPTION FOR GLOBAL ZONE
          SREL            = Z038      I115      P115      R020
          FMID            = JXY1102   FXY1121   FXY1122   FXY1123
          OPTIONS         = OPTGBL
```

Figure 26. GLOBALZONE Entry: Sample LIST Output

UCLIN Examples

You can use the ADD, REP, and DEL UCL statements to change subentries in the GLOBALZONE entry. When you use UCLIN to update a GLOBALZONE entry, keep these points in mind:

- After the UCLIN changes are made, the GLOBALZONE entry must contain at least one of these subentries: FMID, OPTIONS, SREL, or ZONEINDEX. Otherwise, there is not enough information in the entry for SMP/E to use the entry.
- If a DEL statement deletes all the existing subentries in the entry, SMP/E deletes the entire entry.

The following examples are provided to help you use the GLOBALZONE entry.

Example 1: Defining the GLOBALZONE Entry

To perform any SMP/E processing, you must first define the GLOBALZONE entry. Given the following assumptions:

- You are supporting functions JXY1102, JXY1121, JXY1122, and JXY1123 from this global zone.
- You are supporting system releases Z038, P115, and R020, and I121.
- You are eventually going to define two target zones, TGT1 and TGT2, to exist on SYS1.TGT.SMPCSI.CSI, and two distribution zones, DLIB1 and DLIB2, to exist on SYS1.DLIB.SMPCSI.CSI.
- The OPTIONS entry used is OPTGBL.

The following UCLIN can be used to define the GLOBALZONE entry:

```
SET      BDY(GLOBAL)        /* Set to global zone.      */.
UCLIN                       /*                          */.
ADD      GLOBALZONE         /* Define global now.       */
         SREL(Z038,P115,    /* Identify SRELs.          */
              R020,I115)    /*                          */
         FMID(JXY1102,      /* Identify functions.      */
              JXY1121,      /*                          */
              JXY1122,      /*                          */
              JXY1123)      /*                          */
         OPTIONS(OPTGBL)    /* OPTIONS entry to be used.*/
         ZONEINDEX(         /*                          */
                   (TGT1,SYS1.TGT.SMPCSI.CSI,TARGET) /* */
                   (TGT2,SYS1.TGT.SMPCSI.CSI,TARGET) /* */
```

```
                  (DLIB1,SYS1.DLIB.SMPCSI.CSI,DLIB) /* */
                  (DLIB2,SYS1.DLIB.SMPCSI.CSI,DLIB) /* */
                 )         /*                        */
                           /*                        */.
ENDUCL                     /*                        */.
```

Note: Even though the OPTIONS entry has not been set up yet, you can still refer to it in the GLOBALZONE entry. The same is true for the target zone name. However, the OPTIONS entry must be created before the global zone is processed. For examples of setting up the OPTIONS entries, see “OPTIONS Entry (Global Zone)” on page 265.

Example 2: Deleting Two ZONEINDEX Entries

Assume you decide not to create the TGT1 target zone and the DLIB1 distribution zone defined in the ZONEINDEX of example 1. You should delete the entries for those two zones by using UCL as follows:

```
SET      BDY(GLOBAL)        /* Set to global zone.      */.
UCLIN                       /*                          */.
DEL      GLOBALZONE         /* Define global now.       */
         ZONEINDEX(         /*                          */
                  (TGT1)    /* Delete TGT1 entry.       */
                  (DLIB1)   /* Delete DLIB1 entry.      */
                 )          /*                          */
                            /*                          */.
ENDUCL                      /*                          */.
```

Note: The CSI data set name and the zone type operands are not required for a delete, although the open and close parentheses around the zones are still required.

Example 3: Formatting a Zone Description

Assume you enter the following zone description with the first line ending in column 72 and the second line starting in column 1:

```
----+----1----+----2----  ...  ----5----+----6----+----7--
SET      BDY(GLOBAL)        /* Set to global zone.      */.
UCLIN                       /* UCLIN for GZONE entry    */.
ADD      GZONE              /* to set up.               */
         ZDESC(                THIS IS THE DESCRIPTION FOR
THE GLOBAL ZONE)
                            /* End of zone description. */.
ENDUCL                      /* End global zone update.  */.
```

Because there is no blank between the word ending in column 72 and the next word starting in column 1, SMP/E runs the two together.

The words in a zone description, even words that end in column 72, must be separated by blanks. To format the zone description in this example correctly, you can put a blank at the beginning of the second line:

```
----+----1----+----2----  ...  ----5----+----6----+----7--
SET      BDY(GLOBAL)        /* Set to global zone.      */.
UCLIN                       /* UCLIN for GZONE entry    */.
ADD      GZONE              /* to set up.               */
         ZDESC(                THIS IS THE DESCRIPTION FOR
 THE GLOBAL ZONE)
                            /* End of zone description. */.
ENDUCL                      /* End global zone update.  */.
```

Because there is a blank explicitly coded between the word ending in column 72 and the word starting in column 2, SMP/E does not run the words together.

Example 4: Renaming an SMPCSI data set and updating a ZONEINDEX

Assume you have a target zone named TGT1 that resides in a data set named SMPE.TEST.TGT1.CSI, and you decide to rename the data set to SYS1.PROD.TGT1.CSI. After renaming the data set, you must use UCLIN to update the ZONEINDEX for the target zone in the global zone, as follows:

```
SET      BDY(GLOBAL)        /* Set to global zone.      */.
UCLIN                       /* UCLIN for GZONE entry.   */.
  DEL GZONE
  ZINDEX( (TGT1) )          /* Delete old TGT1 zone.    */.
  ADD GZONE
  ZINDEX( (TGT1, SYS1.PROD.TGT1.CSI, TARGET) )
                            /* Supply new TGT1 zone.    */.
ENDUCL                      /* End global zone update.  */.
```

You cannot use REP to replace a single zone in the ZONEINDEX list. REP will cause the entire list of zones to be replaced. Instead, you must first delete the zone from the ZONEINDEX list, and then add the zone to the list with the new SMPCSI data set name.

Hierarchical File System Element Entry (Distribution and Target Zone)

The hierarchical file system element entry describes an element that exists in a distribution library or a hierarchical file system. A hierarchical file system entry is created the first time you install a SYSMOD containing an MCS for a hierarchical file system element that does not yet have an entry in the CSI data set.

SMP/E records the function and service level of the Hierarchical File System element in the entry. Once a hierarchical file system element entry exists, it is updated as subsequent SYSMODs affecting the hierarchical file system element are installed.

Table 4 on page 26 shows the types of entries used for Hierarchical File System elements. Some types of elements may be translated into several languages. In these cases, the entry type contains *xxx*, which represents the language used for the element. (If an element was not translated, the entry type does not contain any *xxx* value. Table 5 on page 27 shows the *xxx* values and the languages they represent.

Subentries

These are the subentries for the hierarchical file system element entries as they appear in the LIST output:

name
: is the name of the hierarchical file system element represented by the entry.

  The name can contain 1–8 uppercase alphabetic, numeric, or national ($, #, @) characters.

BINARY or TEXT
: indicates the installation mode to be used when the HFS copy utility is invoked to install the element into the hierarchical file system.

  The UCL operand is **BINARY** or **TEXT**.

  - *Binary* mode means that the element is installed in its entirety as a data stream, with no breaks for logical records.
  - *Text* mode means that the element is installed with breakpoints for logical records.
  - BINARY and TEXT are mutually exclusive.
  - If there is no mode indicator in the hierarchical file system element entry, the HFS copy utility determines how to install the element.

DISTLIB
: specifies the ddname of the distribution library for the hierarchical file system element.

  The UCL operand is **DISTLIB(***ddname***)**.

  - The ddname can contain any uppercase alphabetic, numeric, or national ($, #, @) character, and can be 1–8 characters long.
  - The DISTLIB subentry is required. Without it, SMP/E cannot process any changes for the Hierarchical File System element.

FMID
: identifies the functional owner of this hierarchical file system element. The functional owner is the last function SYSMOD that replaced this element.

  The UCL operand is **FMID(***sysmod_id***)**.

The SYSMOD ID must contain 7 uppercase alphabetic, numeric, or national ($, #, @) characters.

LASTUPD
identifies the cause of the last change to this hierarchical file system element entry.

The UCL operand is **LASTUPD(***value***)**. This subentry can contain one of the following values:

UCLIN
indicates that the change was made as a result of UCLIN processing.

sysmod-id
indicates that the change was made during the installation of the indicated SYSMOD.

The SYSMOD ID must contain 7 uppercase alphabetic, numeric, or national ($, #, @) characters.

LASTUPD TYPE
indicates how the entry was last changed.

The UCL operand is **LASTUPDTYPE(***value***)**. This subentry can contain one of the following values:
ADD The entry was added.
UPD The entry was updated.

LINK
specifies a list of alternative names by which this hierarchical file system element can be known in the hierarchical file system. The full name is produced by concatenating the specified linkname with the hierarchical file system directory identified by the SYSLIB subentry.

In LIST output, linknames are always enclosed in single apostrophes. If an apostrophe is part of a linkname, it is always shown as two consecutive apostrophes in LIST output.

The UCL operand is **LINK(***linkname...***)**.

- The linkname can be from 1 to 1023 characters.
- A linkname can be enclosed in single apostrophes (’). A linkname **must** be enclosed in single apostrophes if any of the following is true:
  - The linkname contains lowercase alphabetic characters.
  - The linkname contains a character that is not uppercase alphabetic, numeric, national ($, #, or @), slash (/), plus (+), hyphen, period, or ampersand (&).
  - The linkname spans more than one line in the control statement.

  The single apostrophes used to enclose a linkname (the delimiters) do not count as part of the 1023-character limit.
- Any apostrophes specified as part of a linkname (not the delimiters) must be doubled.

  Double apostrophes count as two characters in the 1023-character limit.
- The linkname can include characters X'40' through X'FE'.

PARM
specifies a character string that is to be passed to the hierarchical file system copy utility as an execution-time parameter. The maximum length of this

character string is 300 bytes of nonblank data. If any blanks are specified in the PARM value, they are deleted by SMP/E during processing and do not count toward the 300-byte maximum.

The UCL operand is **PARM(***character_string***)**.

- PARM is an optional operand.
- The character string can be entered free-form, without regard to blanks (which are compressed out of the string), and can span multiple 80-byte records.
- If parentheses are specified in the PARM value, there must always be a pair (left and right); otherwise, the results are unpredictable.

RMID

identifies the last SYSMOD that **replaced** this hierarchical file system element. Any subsequent SYSMOD that modifies this hierarchical file system element must have defined a relationship (such as PRE or SUP) with this SYSMOD.

The UCL operand is **RMID(***sysmod_id***)**.

- The SYSMOD ID must contain 7 uppercase alphabetic, numeric, or national ($, #, @) characters.
- If RMID is not specified but **FMID** is, SMP/E sets the RMID value to the specified FMID.

SHSCRIPT

specifies a UNIX shell script to run when this element is copied to (or deleted from) a directory in the hierarchical file system.

The UCL operand is **SHSCRIPT(***scriptname***)**. This subentry optionally contains one or both of the following values, which specify the point in SMP/E processing when the shell script is run:

PRE The shell script is run before the element is copied to the hierarchical file system directory.

POST The shell script is run after the element is copied to the hierarchical file system directory.

POST is the default; the shell script is run after the element is copied to the directory.

SYMLINK

specifies a list of one or more symbolic links, which are file names that can be used as alternate names for referring to this element in the hierarchical file system. Each symbolic link name listed here is associated with a path name listed in the SYMPATH entry. See the description of the SYMPATH entry for more information on how the symbolic link names and path names are associated.

The UCL operand is **SYMLINK(***symlinkname...***)**.

- A hierarchical file system element entry that contains a SYMLINK entry must contain a matching SYMPATH entry. SMP/E will reject any UCLIN command that would violate this condition.
- A symbolic linkname can be from one to 1023 characters. Any characters in the range X'40' through X'FE' may be specified.
- A symbolic linkname can be enclosed in single apostrophes (’). A symbolic linkname **must** be enclosed in single apostrophes if any of the following is true:
  - The symbolic linkname contains lowercase alphabetic characters.

- The symbolic linkname contains a character that is not uppercase alphabetic, numeric, national ($, #, or @), slash (/), plus (+), hyphen, period, or ampersand (&).
- The symbolic linkname spans more than one line in the control statement.

The single apostrophes used to enclose a symbolic linkname (the delimiters) do not count as part of the 1023-character limit.

- Any apostrophes specified as part of a symbolic linkname (not the delimiters) must be doubled. Double apostrophes count as two characters in the 1023-character limit.

SYMPATH

specifies a list of one or more pathnames that are associated with symbolic links identified by the SYMLINK operand. The first pathname in the SYMPATH operand is associated with the first symbolic link in the SYMLINK operand, the second pathname with the second symbolic link, and so on. If there are more symbolic links listed than there are pathnames, then the last listed pathname is used for the remaining symbolic links. If more pathnames are specified than symbolic linknames, then the excess pathnames (at the end of the list) are ignored. The UCL operand is **SYMPATH(***sympathname...***)**.

- A hierarchical file system element entry that contains a SYMPATH entry must contain a matching SYMLINK entry. is specified, otherwise it must be omitted.
- A symbolic pathname can be from one to 1023 characters. Any characters in the range X'40' through X'FE' may be specified.
- A symbolic pathname can be enclosed in single apostrophes (’). A symbolic pathname **must** be enclosed in single apostrophes if any of the following is true:
  - The symbolic pathname contains lowercase alphabetic characters.
  - The symbolic pathname contains a character that is not uppercase alphabetic, numeric, national ($, #, or @), slash (/), plus (+), hyphen, period, or ampersand (&).
  - The symbolic pathname spans more than one line in the control statement.

  The single apostrophes used to enclose a symbolic pathname (the delimiters) do not count as part of the 1023-character limit.
- Any apostrophes specified as part of a symbolic pathname (not the delimiters) must be doubled. Double apostrophes count as two characters in the 1023-character limit.

SYSLIB

specifies the ddname of the “target library” within the hierarchical file system for the hierarchical file system element.

The UCL operand is **SYSLIB(***ddname***)**.

- Only one SYSLIB value can be specified.
- The ddname can contain any uppercase alphabetic, numeric, or national ($, #, @) character, and can be 1 to 8 characters long.
- The SYSLIB subentry is required. Without it, SMP/E cannot process any changes for the Hierarchical File System element.

LIST Examples

To list all the generic hierarchical file system element entries in a particular zone that support the Spanish language, you can use the following commands:

```
SET      BDY(TGT1)          /* Set to requested zone.   */.
LIST     HFSESP             /* List all generic HFS     */
                            /* element entries (Spanish)*/.
```

To list specific UNIX1 element entries, you can use these commands:

```
SET      BDY(TGT1)          /* Set to requested zone.   */.
LIST     UNIX1(UNXEL1       /* List only these          */
             UNXEL2         /* three                    */
             UNXEL3)        /* entries.                 */.
```

The format of the LIST output for each hierarchical file system element entry is the same for both of these commands. The only difference is the number of hierarchical file system element entries listed. Figure 27 shows an example of LIST output for UNIX1 element entries.

```
PAGE nnnn  - NOW SET TO zzzzzz ZONE nnnnnnn  DATE mm/dd/yy TIME hh:mm:ss SMP/E 31.nn SMPLIST OUTPUT

TGT1    UNIX1    ENTRIES


  NAME

UNXEL1    LASTUPD         = UNXFUNC TYPE=ADD
          LIBRARIES       = DISTLIB=APOSIXL1  SYSLIB=UNXTGTL1
          BINARY
          FMID            = UNXFUNC
          RMID            = UNXPTF1
          SHSCRIPT        = INSTAL01,PRE
          LINK            = 'linkname_1'
                          = 'linkname_2'

UNXEL2    LASTUPD         = UNXFUNC TYPE=ADD
          LIBRARIES       = DISTLIB=APOSIXL2  SYSLIB=UNXTGTL2
          TEXT
          FMID            = UNXFUNC
          RMID            = UNXFUNC
          LINK            = 'linkname_3'
                          = 'linkname_4'
          SHSCRIPT        = INSTAL02,POST
UNXEL3    LASTUPD         = UNXFUNC  TYPE=ADD
          LIBRARIES       = DISTLIB=APOSIXL2  SYSLIB=UNXTGTL2
          TEXT
          FMID            = UNXFUNC
          RMID            = UNXPTF2
          LINK            = 'linkname_5'
                            'linkname_6'
          SHSCRIPT        = INSTAL03,PRE,POST
          PARM            = This_is_another_sample_character_string_specified_as_the_value_of_PARM.__It_is_a_maximum____
                            length_character_string_for_this_subentry.__I.e.,_it_is_300_characters_long.__The_string____
                            has_no_blanks_in_it.__If_you_see_something_that_looks_like_a_blank,_it's_not.  The_previous_
                            2_characters_are_X'41'...
```

Figure 27. Hierarchical File System Element Entry: Sample LIST Output

By specifying the FORFMID operand, you can reduce the number of hierarchical file system element entries listed. When FORFMID is specified, SMP/E lists a hierarchical file system element entry only if its FMID matches one of the FMIDs specified on the FORFMID operand. For example, to list hierarchical file system element entries whose FMIDs either are defined in FMIDSET HFS or are HFSFUNC, you can use these commands:

```
SET      BDY(TGT1)          /* Set to target zone.      */.
LIST     HFS                /* List all hierarchical    */
                            /* file system element      */
```

```
                                /* entries                  */
          FORFMID(HFS           /* for the HFS FMIDSET      */
                  HFSFUNC)      /* and FMID HFSFUNC.        */.
```

You can use the LIST command to find out the names of all SYSMODs that have modified a hierarchical file system element. To include the names of these SYSMODs in the LIST output you can use the XREF operand, as shown in these commands:

```
SET      BDY(TGT1)            /* Set to requested zone.   */.
LIST     HFS                  /* List all hierarchical    */
                              /* file system element      */
                              /* entries                  */
         XREF                 /* and related SYSMODs.     */.
```

Notes:

1. XREF can be used either in mass mode or in select mode.
2. SMP/E obtains the data included for the XREF operand by checking all the SYSMOD entries for subentries for this hierarchical file system element. Because this data is not contained in the hierarchical file system element entry itself, you cannot use UCLIN to change it in the hierarchical file system element entry.

Figure 28 is an example of the LIST output produced when the XREF operand is used.

```
PAGE nnnn  - NOW SET TO zzzzzz ZONE nnnnnnn  DATE mm/dd/yy TIME hh:mm:ss SMP/E 31.nn SMPLIST OUTPUT

TGT1    UNIX1    ENTRIES


  NAME

UNXEL1    LASTUPD         = UNXFUNC TYPE=ADD
          LIBRARIES       = DISTLIB=APOSIXL1  SYSLIB=UNXTGTL1
          BINARY
          FMID            = UNXFUNC
          RMID            = UNXPTF1
          LINK            = 'linkname_1'
                          = 'linkname_2'
          SHSCRIPT        = INSTAL01,PRE
          SYSMOD HISTORY  = SYSMOD   TYPE      DATE    MCS     --STATUS--
                            UNXFUNC  FUNCTION  01.100  UNX     APP    ACC
                            UNXPTF1  PTF       01.120  UNX     APP    ACC

UNXEL2    LASTUPD         = UNXFUNC TYPE=ADD
          LIBRARIES       = DISTLIB=APOSIXL2  SYSLIB=UNXTGTL2
          TEXT
          FMID            = UNXFUNC
          RMID            = UNXFUNC
          LINK            = 'linkname_3'
                          = 'linkname_4'
          SHSCRIPT        = INSTAL02,POST
          SYSMOD HISTORY  = SYSMOD   TYPE      DATE    MCS     --STATUS--
                            UNXFUNC  FUNCTION  01.100  UNX     APP    ACC
```

Figure 28. Hierarchical File System Element Entry: Sample LIST Output When XREF Is Specified

To list the UNIX shell script (SHELLSCR) element entries for a particular zone, you can use the following commands:

```
SET      BDY(TGT1)            /* Set to requested zone.   */.
LIST     SHELLSCR             /* List all UNIX shell      */
                              /* script element entries   */.
```

Hierarchical File System Element Entry (Distribution and Target Zone)

Figure 29 shows an example of the LIST output for SHELLSCR element entries.

```
PAGE nnnn  - NOW SET TO TARGET ZONE zzzzzz  DATE mm/dd/yy TIME hh:mm:ss SMP/E 31.nn SMPLIST OUTPUT

TGT1  SHELLSCR   ENTRIES


  NAME

INSTAL01  LASTUPD         = FUNC001 TYPE=ADD
          LIBRARIES       = DISTLIB=HFSDLIB  SYSLIB=UNXTGTL1
          TEXT
          FMID            = FUNC001
          RMID            = FUNC001

INSTAL02  LASTUPD         = FUNC002 TYPE=UPD
          LIBRARIES       = DISTLIB=HFSDLIB  SYSLIB=UNXTGTL1
          TEXT
          FMID            = FUNC002
          RMID            = FUNC002


INSTAL03  LASTUPD         = FUNC001 TYPE=ADD
          LIBRARIES       = DISTLIB=HFSDLIB  SYSLIB=UNXTGTL1
          TEXT
          FMID            = FUNC001
          RMID            = FUNC001
```

Figure 29. Hierarchical File System Element Entry: Sample LIST Output for SHELLSCR entries

UNLOAD Examples

To dump the hierarchical file system element entries in UCL format, you can use the UNLOAD command. For example, to unload all the OS21 element entries in a particular zone, you can use the following commands:

```
SET      BDY(TGT1)          /* Set to requested zone.   */.
UNLOAD   OS21               /* Unload all OS21 element entries. */.
```

To unload specific OS21 element entries, you can use these commands:

```
SET      BDY(TGT1)          /* Set to requested zone.   */.
UNLOAD   OS21(OS2EL1        /* Unload only these        */
              OS2EL2        /* three                    */
              OS2EL3)       /* entries.                 */.
```

The format of the UNLOAD output for each OS21 element entry is the same for both of these commands. The only difference is the number of element entries listed. Figure 30 on page 216 is an example of UNLOAD output for OS21 element entries.

Hierarchical File System Element Entry (Distribution and Target Zone)

```
UCLIN .
REP       OS21            ( OS2EL1   )
          LASTUPD         ( OS2FUNC  )
          LASTUPDTYPE     ( ADD )
          DISTLIB         ( OS2DSTL1 )
          SYSLIB          ( OS2TGTL1 )
          FMID            ( OS2FUNC )
          RMID            ( OS2PTF1 )
          LINK            ( 'linkname_1'
                            'linkname_2' )
          SHSCRIPT        ( INST0S2,POST )
                          .
REP       OS21            ( OS2EL2   )
          LASTUPD         ( OS2FUNC  )
          LASTUPDTYPE     ( ADD )
          DISTLIB         ( OS2DSTL2 )
          SYSLIB          ( OS2TGTL2 )
          FMID            ( OS2FUNC )
          RMID            ( OS2FUNC )
          LINK            ( 'linkname_3'
                            'linkname_4' )
          SHSCRIPT        ( INST0S2,POST )
                          .
REP       OS21            ( OS2EL3 )
          LASTUPD         ( OS2FUNC )
          LASTUPDTYPE     ( ADD )
          DISTLIB         ( APOSIXL2 )
          SYSLIB          ( OS2TGTL2 )
          TEXT
          FMID            ( OS2FUNC )
          RMID            ( OS2PTF2 )
          LINK            ( 'linkname_5'
                            'linkname_6' )
          PARM            ( This_is_another_sample_character_string_spec
                            ified_as_the_value_of_PARM.__It_is_a_maximum
                            ____length_character_string_for_this_subentr
                            y.__I.e.,_it_is_300_characters_long.__The_st
                            ring____has_no_blanks_in_it.__If_you_see_som
                            ething_that_looks_like_a_blank,_it's_not.  T
                            he_previous_2_characters_are_X'41'...
                            )
                          .
ENDUCL.
```

Figure 30. OS21 Element Entry: Sample UNLOAD Output

By specifying the FORFMID operand, you can reduce the number of OS21 element entries unloaded. When FORFMID is specified, SMP/E unloads an OS21 element entry only if its FMID matches one of the FMIDs specified on the FORFMID operand. For example, to unload OS21 element entries whose FMIDs either are defined in FMIDSET OS2 or are OS2FUNC, you can use these commands:

```
SET      BDY(TGT1)          /* Set to target zone.             */.
UNLOAD   OS21               /* Unload all OS21 element entries */
         FORFMID(OS21       /* for the OS21 FMIDSET            */
                 OS2FUNC)   /* and FMID OS2FUNC.               */.
```

UCLIN Examples

You can use the ADD, REP, and DEL UCL statements to change subentries in the hierarchical file system element entry. After the UCLIN changes are made, the hierarchical file system element entry must contain at least the following subentries:

- DISTLIB
- FMID

- RMID
- SYSLIB

Otherwise, there is not enough information in the entry to process the element. If any of these subentries are missing, SMP/E does not make the requested UCL updates to the entry, and the entry remains as it was before the UCL command.

The following examples are provided to help you use the hierarchical file system element entries.

Example 1: Adding a New Hierarchical File System Element Entry

Defining a new hierarchical file system element entry with UCL is very seldom required; generally, hierarchical file system element entries are created from the information specified on the hierarchical file system element MCSs contained in the SYSMODs when the SYSMODs are installed. If, however, you want to use UCL in defining a new hierarchical file system element entry, the following is an example of the minimum information you should provide:

```
SET      BDY(TGT1)          /* Set to target zone.        */.
UCLIN                       /*                            */.
ADD      HFS(HFS01)         /* Define new entry.          */
         DISTLIB(AHFSLIB)   /* Define DLIB,               */
         SYSLIB(HFSLIB)     /* target library.            */
         FMID(ZUSR001)      /* Functional owner (in this
                               example a user function).  */
         RMID(ZUSR001)      /* Same value as FMID.        */
                            /*                            */.
ENDUCL                      /*                            */.
SET      BDY(DLB1)          /* Now do same to DLIB.       */.
UCLIN                       /*                            */.
ADD      HFS(HFS01)         /* Define new HFS entry.      */
         DISTLIB(AHFSLIB)   /* Define DLIB,               */
         SYSLIB(HFSLIB)     /* target library.            */
         FMID(ZUSR001)      /* Functional owner (in this
                               example a user function).  */
         RMID(ZUSR001)      /* Same value as FMID.        */
                            /*                            */.
ENDUCL                      /*                            */.
```

Note: If the RMID value had not been specified, it would have defaulted to the FMID value.

Example 2: Defining a Linkname for an Existing Hierarchical File System Element

The following shows how to inform SMP/E of new linkname for an existing hierarchical file system element:

```
SET      BDY(TGT1)          /* Set to target zone.      */.
UCLIN                       /*                          */.
ADD      HFS(HFS01)         /* Existing entry.          */
         LINK('../userlk')  /* New linkname.            */
                            /*                          */.
ADD      HFS(HFS02)         /* Existing entry.          */
         LINK('myname')     /* New linkname.            */
                            /*                          */.
ENDUCL                      /*                          */.
SET      BDY(DLB1)          /* Now do same thing to
                               appropriate DLIB.        */.
UCLIN                       /*                          */.
ADD      HFS(HFS01)         /* Existing entry.          */
         LINK('../userlk')  /* New linkname.            */
                            /*                          */.
ADD      HFS(HFS02)         /* Existing entry.          */
```

```
        LINK('myname')     /* New linkname.           */
                           /*                         */.
ENDUCL                     /*                         */.
```

Note: UCLIN does not create a linkname in the hierarchical file system; that must be done outside of SMP/E using standard utilities. The UCLIN changes ensure that, when the hierarchical file system element is subsequently modified, the hierarchical file system element is updated under both its primary name and its alternative name in the hierarchical file system.

Example 3: Adding a Hierarchical File System Element Entry with a PARM Subentry

If you want to use UCL in adding a hierarchical file system element entry with a PARM subentry, the following example shows you how this can be done.

```
SET     BDY(TGT1).         /* Set to target zone.                */
UCLIN   .                  /*                                    */
ADD     HFS(HFSEL3) LASTUPD(HFSFUNC) LASTUPDTYPE(ADD)
        DISTLIB(APOSIXL2) SYSLIB(HFSTGTL2) FMID(HFSFUNC) TEXT
        RMID(HFSPTF2) LINK('linkname_5' 'linkname_6' )
        PARM(This_is_another_sample_character_string_specified_as_the_
value_of_PARM.__It_is_a_maximum____length_character_string_for_this_
subentry.__I.e.,_it_is_300_characters_long.__The_string____has_no_
blanks_in_it.__If_you_see_something_that_looks_like_a_blank,_it's_not.
  The_previous_2_characters_are_X'41'...) .
ENDUCL  .                  /*                                    */
```

HOLDDATA Entry (Global Zone)

The HOLDDATA entry contains ++HOLD statements that either were received from SMPHOLD (external HOLDDATA) or were within a SYSMOD that was received (internal HOLDDATA). It is a record of the ++HOLD statements and is not used by SMP/E to control exception SYSMOD processing.

The HOLDDATA entry is separate from the SYSMOD entry. However, when SMP/E saves ++HOLD statements to create HOLDDATA entries, it also creates HOLDDATA subentries in the associated global zone SYSMOD entry. (These subentries appear in the LIST output as HOLDERROR, HOLDSYSTEM, or HOLDUSER plus the hold reason IDs.) SMP/E uses these HOLDDATA subentries to control exception SYSMOD processing.

LIST Examples

To list all the HOLDDATA entries in a global zone, you can use the following commands:

```
SET      BDY(GLOBAL)        /* Set to requested zone.     */.
LIST     HOLDDATA           /* List all HOLDDATA entries. */.
```

To list HOLDDATA entries for a specific type of hold, code one or more of the following operands: HOLDERROR, HOLDSYSTEM, HOLDUSER. Here is an example:

```
SET      BDY(GLOBAL)        /* Set to requested zone.     */.
LIST     HOLDDATA           /* List HOLDDATA entries      */
         HOLDSYSTEM         /* for system holds           */.
```

To list specific SYSMOD entries in the global zone along with the associated ++MCSs (HOLDDATA), you can use these commands:

```
SET      BDY(GLOBAL)        /* Set to requested zone.     */.
LIST     SYSMOD(UZ12345     /* List only these two        */
                UZ56789)    /* entries                    */
         HOLDDATA           /* plus HOLDDATA for them.    */.
```

The output from the LIST requests differs in the amount of information presented. If you list just the HOLDDATA entries, only the HOLDDATA itself is presented, as in Figure 31 on page 220. If you request the HOLDDATA associated with SYSMOD entries, the HOLDDATA is included in the SYSMOD entry, as in Figure 32 on page 221. (For more information about listing HOLDDATA, see the description of the HOLDDATA operand of the LIST command in the *SMP/E Commands* manual.)

Notes:

1. The ++HOLD statements displayed in the LIST output are exactly as received by SMP/E. They are listed in alphanumeric order by reason ID.
2. If HOLDDATA for a particular SYSMOD has been received but the SYSMOD itself has not yet been received, only the hold information is shown when the SYSMOD entry is listed. For an example, see SYSMOD UZ56789 in Figure 32 on page 221.
3. HOLDDATA entries for system holds show either **INT** or **EXT** to indicate the source of the ++HOLD statement. **INT** means that the ++HOLD statement was contained in the held SYSMOD and can be resolved only with the BYPASS operand on the APPLY or ACCEPT command. **EXT** means that the ++HOLD statement was obtained from another source, such as SMPHOLD, and can be resolved by either the BYPASS operand or a ++RELEASE statement.

4. You cannot use UCLIN to add, update, or delete HOLDDATA entries or subentries. However, you can use the REJECT command to delete HOLDDATA entries. For more information on the REJECT command, see the *SMP/E Commands* manual.

```
PAGE nnnn  - NOW SET TO zzzzzz ZONE nnnnnnn  DATE mm/dd/yy TIME hh:mm:ss SMP/E 31.nn SMPLIST OUTPUT

GLOBAL        HOLDDATA ENTRIES


  NAME

UZ12345   HOLDERROR       = AZ00001   ++HOLD(UZ12345) ERROR
                                          REASON(AZ00001) FMID(HBB2102)
                                          COMMENT(SMRTDATA(CHGDTE(011105) SYMP(PRV,IPL))).
          HOLDERROR       = AZ00002   ++HOLD(UZ12345) ERROR
                                          REASON(AZ00002) FMID(HBB2102)
                                          COMMENT(SMRTDATA(CHGDTE(011106) SYMP(FUL))).
          HOLDSYSTEM(INT) = DOC       ++HOLD(UZ12345) SYSTEM
                                          REASON(DOC) FMID(HBB2102)
                                          COMMENT(NEW MSG).
          HOLDSYSTEM(EXT) = UCLIN     ++HOLD(UZ12345) SYSTEM
                                          REASON(UCLIN) FMID(HBB2102)
                                          COMMENT(UCLIN REQUIRED).
          HOLDUSER        = INUSE     ++HOLD(UZ12345) USER
                                          REASON(INUSE) FMID(HBB2102)
                                          COMMENT(IM MODIFYING).

UZ56789   HOLDERROR       = AZ00023   ++HOLD(UZ56789) ERROR
                                          REASON(AZ00023) FMID(HBB2102)
                                          COMMENT(SMRTDATA(CHGDTE(011110) SYMP(ABENDS with E37))).
          HOLDERROR       = AZ00024   ++HOLD(UZ56789) ERROR
                                          REASON(AZ00024) FMID(HBB2102)
                                          COMMENT(SMRTDATA(CHGDTE(011113) SYMP(DAL) FIX(UW92458))).
```

Figure 31. HOLDDATA Entry: Sample LIST Output When SYSMOD Is Not Specified

```
PAGE nnnn  - NOW SET TO zzzzzz ZONE nnnnnnn  DATE mm/dd/yy TIME hh:mm:ss SMP/E 31.nn SMPLIST OUTPUT

GLOBAL        SYSMOD ENTRIES


  NAME

UZ12345   TYPE            = PTF
          STATUS          = REC
          DATE/TIME REC   = 01.100  08:00:00
          SREL   VER(001) = Z038
          DELETE VER(001) = HBB2102
          SUPING VER(001) = AZ11111   AZ11112   AZ11113
          MAC             = MAC01     MAC02     MAC03
          MOD             = MOD01     MOD02     MOD03     MOD04
          SRC             = SRC01     SRC02
          HOLDERROR       = AZ00001   ++HOLD(UZ12345) ERROR
                                          REASON(AZ00001) FMID(HBB2102)
                                          COMMENT(SMRTDATA(CHGDTE(011105) SYMP(PRV,IPL))).
          HOLDERROR       = AZ00002   ++HOLD(UZ12345) ERROR
                                          REASON(AZ00002) FMID(HBB2102)
                                          COMMENT(SMRTDATA(CHGDTE(011106) SYMP(FUL))).
          HOLDSYSTEM(INT) = DOC       ++HOLD(UZ12345) SYSTEM
                                          REASON(DOC) FMID(HBB2102)
                                          COMMENT(NEW MSG).
          HOLDSYSTEM(EXT) = UCLIN     ++HOLD(UZ12345) SYSTEM
                                          REASON(UCLIN) FMID(HBB2102)
                                          COMMENT(UCLIN REQUIRED).
          HOLDUSER        = INUSE     ++HOLD(UZ12345) USER
                                          REASON(INUSE) FMID(HBB2102)
                                          COMMENT(IM MODIFYING).

UZ56789   HOLDERROR       = AZ00023   ++HOLD(UZ56789) ERROR
                                          REASON(AZ00023) FMID(HBB2102)
                                          COMMENT(SMRTDATA(CHGDTE(011110) SYMP(ABENDS with E37))).
          HOLDERROR       = AZ00024   ++HOLD(UZ56789) ERROR
                                          REASON(AZ00024) FMID(HBB2102)
                                          COMMENT(SMRTDATA(CHGDTE(011113) SYMP(DAL) FIX(UW92458))).
```

Figure 32. HOLDDATA Listed for SYSMOD Entry: Sample LIST Output When SYSMOD Is Specified

LMOD Entry (Distribution and Target Zone)

The LMOD entry contains all the information needed to replace or update a given load module. This includes information such as whether the load module is link-edited or copied during the system generation process, any link-edit statements required to relink the load module, the link-edit attributes of the load module, and the libraries in which it resides. An LMOD entry is generally created by one of the following methods:

- **Installing a SYSMOD that adds the load module.** LMOD entries can be created when a SYSMOD is installed. SMP/E builds an LMOD entry if it encounters a ++MOD statement for a load module that does not yet have an LMOD entry and if the distribution library for the module was totally copied during system generation. For more information about copied load modules, see "DLIB Entry (Distribution and Target Zone)" on page 191 and the *SMP/E Commands* manual.
- **Processing JCLIN.** LMOD entries can be created during JCLIN processing when SMP/E scans the copy and link-edit steps. At the same time, SMP/E builds MOD entries for modules that are linked or copied to the load module. For more information, see "MOD Entry (Distribution and Target Zone)" on page 248 and the "Processing" section of the JCLIN command chapter of the *SMP/E Commands* manual.

Subentries

These are the subentries for the LMOD entry as they appear in the LIST output:

name
: is the name of the load module described by the LMOD entry.

  The name can contain from 1 to 8 alphanumeric characters.

CALLLIBS
: specifies one or more DDDEF entries, existing in the same zone, that compose the SYSLIB allocation to be used when the load module is link-edited.

  The UCL operand is **CALLLIBS(***name*...**)**.

  - The DDDEF names can contain from 1 to 8 alphabetic (A through Z), national (@, #, or $), or numeric (0 through 9) characters. The first character must be alphabetic or national.
  - SMP/E does not enforce any limit on the number of names that can be specified in a CALLLIBS subentry list. However, DFSMS/MVS sets its own limits on how many data sets can be concatenated. The actual limit depends on the kind of data sets to be concatenated (partitioned data sets or PDSEs) and the total number of extents for partitioned data sets. Refer to *z/OS DFSMS: Using Data Sets* for information on calculating this limitation.
  - The order in which the libraries are specified is important because it indicates the order in which the SYSLIB concatenation is built.

COPY
: is a special SMP/E indicator meaning that the load module was copied during system generation, and that there is a one-to-one correspondence between the distribution library module (the MOD entry) and the target system load module (the LMOD entry). This information is used during APPLY processing to determine whether the LEPARM values from a ++MOD statement are applicable to the load module. It is also used during delete and compress processing to determine whether a load module can be deleted before the new modules are installed.

The UCL operand is **COPY**.

LASTUPD
identifies the cause of the last change to this LMOD entry.

Note: If a given UCLIN command specifies only cross-zone subentries, this field is not changed.

The UCL operand is **LASTUPD(***value***)**. This subentry can contain one of the following values:

JCLIN
indicates that the change was made during JCLIN command processing.

UCLIN
indicates that the change was made as a result of UCLIN processing.

sysmod_id
indicates that the change was made during the installation of the indicated SYSMOD. The SYSMOD did one of the following:

- Contained inline JCLIN that affected the LMOD entry.
- Renamed the load module using the ++RENAME statement.
- Moved the load module to a new target system library using the ++MOVE statement.

A SYSMOD that does not do any of the previously listed actions will not cause an update to the LASTUPD subentry. For example, a SYSMOD that supplies one or more modules (++MOD) that cause the load module to be link edited does not necessarily cause the LMOD entry's LASTUPD subentry to be updated. The LASTUPD subentry only indicates when the LMOD entry was updated, not when the module content of a load module is updated.

The SYSMOD ID must contain 7 alphanumeric characters.

LASTUPD TYPE
indicates how the entry was last changed.

Note: If a given UCLIN command specifies only cross-zone subentries, this field is not changed.

The UCL operand is **LASTUPDTYPE(***value***)**. This subentry can contain one of the following values:

ADD The entry was added.
DEL A subentry in the entry was deleted.
MOV The load module was moved.
REN The load module was renamed.
UPD The entry was updated.

LKED ATTRIBUTES
identifies the link-edit attributes that must be used when this load module is link-edited. SMP/E supports the following link-edit attributes. For more information, see *z/OS DFSMS Program Management*.

AC=1 specifies that the AC=1 parameter (which is the authorization code) is to be passed to the link-edit utility when the load module is link-edited.

The UCL operand is **AC=1**.

ALIASES
specifies that the ALIASES parameter is to be passed to the link-edit utility when the load module is link-edited.

The UCL operand is **ALIASES(ALL)**.

ALIGN2
specifies that the ALIGN2 parameter (alignment on a 2KB boundary) is to be passed to the link-edit utility when the load module is link-edited.

The UCL operand is **ALIGN2** or **ALN2**.

AMODE=24
specifies that the AMODE=24 parameter is to be passed to the link-edit utility when the load module is link-edited.

The UCL operand is **AMODE=24** or **AMOD=24**.

AMODE=31
specifies that the AMODE=31 parameter is to be passed to the link-edit utility when the load module is link-edited.

The UCL operand is **AMODE=31** or **AMOD=31**.

AMODE=64
specifies that the AMODE=64 parameter is to be passed to the link-edit utility when the load module is link-edited.

The UCL operand is **AMODE=64** or **AMOD=64**.

AMODE=ANY
specifies that the AMODE=ANY parameter is to be passed to the link-edit utility when the load module is link-edited.

The UCL operand is **AMODE=ANY** or **AMOD=ANY**.

AMODE=MIN
specifies that the AMODE=MIN parameter is to be passed to the link-edit utility when the load module is link-edited.

The UCL operand is **AMODE=MIN** or **AMOD=MIN**.

CALL indicates that the CALL parameter has been specified for a load module in a JCLIN link-edit step.

Note: If the load module being link-edited contains a CALLLIBS subentry list, SMP/E uses NCAL for the link to the SMPLTS library, and ignores the CALL subentry in the LMOD entry.

For more information about link-edit parameters, see the the discussion of “Link-edit utility” under the PARM subentry of UTILITY Entry (Global Zone). Also see the APPLY command chapter in the *SMP/E Commands* manual.

The UCL operand is **CALL**.

CASE
specifies that the CASE parameter, which controls case sensitivity and folding, is to be passed to the link-edit utility when the load module is link-edited.

The UCL operand is **CASE(UPPER|MIXED)**.

- CASE(UPPER) and CASE(MIXED) are mutually exclusive.

COMPAT
specifies that the COMPAT parameter is to be passed to the link-edit utility when the load module is link-edited.

The UCL operand is **COMPAT=LKED|PM1|PM2|PM3|PM4**.

DC specifies that the DC parameter, which is the downward compatible attribute, is to be passed to the link-edit utility when the load module is link-edited.

The UCL operand is **DC**.

DYNAM
specifies that the DYNAM parameter is to be passed to the link-edit utility when the load module is link-edited.

The UCL operand is **DYNAM(DLL)**.

FETCHOPT
specifies that the FETCHOPT parameter is to be passed to the link-edit utility when the load module is link-edited.

The UCL operand is **FETCHOPT(PACK|NOPACK, PRIME|NOPRIME)**.

FILL specifies that the FILL parameter is to be passed to the link-edit utility when the load module is link-edited.

The UCL operand is **FILL(***nn***)**, where *nn* is the 2-character representation of a single hex byte (00 - FF).

HOBSET
specifies that the HOBSET parameter is to be passed to the link-edit utility when the load module is link-edited.

The UCL operand is **HOBSET**.

MAXBLK
specifies that the MAXBLK parameter is to be passed to the link-edit utility when the load module is link-edited.

The UCL operand is **MAXBLK(***nnnnn***)**, where *nnnnn* is a number between 256 and 32760.

NE specifies that the NE parameter, which is the noneditable attribute, is to be passed to the link-edit utility when the load module is link-edited.

The UCL operand is **NE**.

NOCALL
specifies that the NCAL parameter is to be passed to the link-edit utility when the load module is link-edited.

Note: If the load module being link-edited contains a CALLLIBS subentry list, SMP/E uses CALL for the link to the actual target library, and ignores the NOCALL subentry in the LMOD entry.

For more information about link-edit parameters, see the the discussion of “Link-edit utility” under the PARM subentry of UTILITY Entry (Global Zone). Also see the APPLY command chapter in the *SMP/E Commands* manual.

The UCL operand is **NOCALL** or **NCAL**.

OL specifies that the OL parameter is to be passed to the link-edit utility when the load module is link-edited.

The UCL operand is **OL**.

OVLY specifies that the OVLY parameter, which specifies that the load module is in overlay structure, is to be passed to the link-edit utility when the load module is link-edited.

The UCL operand is **OVLY**.

REFR
specifies that the REFR parameter, which is the refreshable attribute, is to be passed to the link-edit utility when the load module is link-edited.

The UCL operand is **REFR**.

RENT
specifies that the RENT parameter, which indicates that the load module is re-entrant, is to be passed to the link-edit utility when the load module is link-edited.

The UCL operand is **RENT**.

REUS
specifies that the REUS parameter, which indicates that the load module is reusable, is to be passed to the link-edit utility when the load module is link-edited.

The UCL operand is **REUS**.

REUS(NONE)
specifies that the REUS(NONE) parameter, which indicates that the load module cannot be reused, is to be passed to the link-edit utility when the load module is link-edited.

The UCL operand is **REUS(NONE)**.

RMODE=24
specifies that the RMODE=24 parameter is to be passed to the link-edit utility when the load module is link-edited.

The UCL operand is **RMODE=24** or **RMOD=24**.

RMODE=ANY
specifies that the RMODE=ANY parameter is to be passed to the link-edit utility when the load module is link-edited.

The UCL operand is **RMODE=ANY** or **RMOD=ANY**.

RMODE=SPLIT
specifies that the RMODE=SPLIT parameter is to be passed to the link-edit utility when the load module is link-edited.

The UCL operand is **RMODE=SPLIT** or **RMOD=SPLIT**.

SCTR
specifies that the SCTR parameter, which indicates that the load module can be scatter-loaded, is to be passed to the link-edit utility when the load module is link-edited.

The UCL operand is **SCTR**.

STD is a special SMP/E indication that the load module should be link-edited with none of the previously listed attributes.

STD appears in LIST and UNLOAD output in these cases:

- STD was specified on a UCL statement for this entry.
- No link-edit attributes were specified for this entry. SMP/E uses the standard system link-edit parameters.
- The LMOD entry was created by a JCLIN copy step.

If this attribute is specified when a load module is to be link-edited and no UTILITY entry is being used, SMP/E passes the default link-edit parameters to the link-edit utility. For more information about link-edit parameters, see the APPLY command chapter in the *SMP/E Commands* manual.

The UCL operand is **STD**.

UPCASE
specifies that the UPCASE parameter, which indicates how the Binder should process symbol names, is to be passed to the link-edit utility when the load module is link-edited.

The UCL operand is **UPCASE(YES|NO)**.

- UPCASE(YES) and UPCASE(NO) are mutually exclusive.

LKED CONTROL
contains all the link-edit control cards necessary to relink-edit this load module.

Note: Relink-editing a load module is triggered by a replacement for one of the modules within that load module. SMP/E performs only CSECT replaces when relink-editing the load module; it does not completely rebuild the load module from the distribution libraries. Therefore, it is not necessary to save all the link-edit control statements in the LMOD entry; for example, the INCLUDE statements are not saved.

The UCL operands are **++LMODIN** and **++ENDLMODIN**.

- The ++LMODIN and ++ENDLMODIN statements must start in column 1.
- No other operands can start on the same line as the ++LMODIN statement.
- The ++ENDLMODIN statement must be specified if the ++LMODIN statement is specified.
- The link-edit control statements must follow SMP/E's coding conventions. For more information, see the section "General JCLIN Coding Conventions" section of the JCLIN command chapter of the *SMP/E Commands* manual.
- Comment statements are ignored and are not saved in the LMOD entry. (Any link-edit control statement with an asterisk in column 1 is considered a comment statement.)

MODDEL
specifies the modules that were once part of this load module but have been deleted. If the modules are reinstalled, they are linked back into this load module.

The UCL operand is **MODDEL(***module*...**)**.

The module names can contain from 1 to 8 alphanumeric characters.

RETURN CODE
specifies the maximum acceptable return code from the link edit utility for this specific load module. If the return code from the link edit utility is higher than this value, SMP/E normally assumes the link edit operation failed.

The UCL operand is **RC(***rc***)**, where the *rc* value can be any decimal number from 0 to 16.

SIDE DECK LIBRARY
specifies the library to contain the definition side deck. The definition side deck may be created as a member of a partitioned data set (PDS or PDSE), or as a file within a directory in the hierarchical file system. The definition side deck is created by the link edit utility when the load module is link-edited, and it contains IMPORT control statements for each exported symbol defined in the load module. The member or file name of the definition side deck is the same as the load module name. In addition, the definition side deck will have the same aliases as those specified for the load module.

The UCL operand is **SIDEDECKLIB(***ddname***)**, where *ddname* is the ddname of the library where the load module's definition side deck will reside.

Note: This subentry name appears in the LIST output as SIDE DECK LIB.

SYSTEM LIBRARIES
specifies the target system libraries in which this load module resides.

The UCL operand is **SYSLIB(***ddname*...**)**.
- There can be up to two SYSLIB values in an LMOD entry.
- The ddnames can contain from 1 to 8 alphanumeric characters.

Note: This subentry name appears in the LIST output as SYSTEM LIBRARY.

UTILITY INPUT
specifies one or more files to be included when this load module is link-edited. The ddname of the library where the file resides is also indicated.

The UCL operand is **UTIN((***name,ddname***)**...**)**, where *name* is the file (or member) name, and *ddname* is the ddname of the library where the file resides.

The combination of *name* and *ddname* determines the uniqueness of a subentry in the utility input subentry list. Only one subentry value for a given *name* and *ddname* combination is saved in the utility input subentry list.

XZMOD
specifies one or more modules that were added to the load module by the LINK command. The name of the zone supplying each module is also indicated.

The UCL operand is **XZMOD((***module,zone***)**...**)**.
- The zone name specified for an XZMOD subentry cannot match the name of the set-to zone.
- The XZMOD subentry is added to an LMOD entry automatically during LINK command processing. However, it is almost never removed automatically, except during JCLIN processing. For more information, see the "Cross-Zone Relationships" section of the JCLIN command chapter of the *SMP/E Commands* manual.
- An LMOD entry can contain XZMOD and XZMODP subentries without any other subentries. Such an LMOD entry represents a *stub* load module, which is retained after a load module with cross-zone relationships is deleted. If the deleted load module is later reinstated, SMP/E uses the information in the stub load module to issue messages reminding the user to use the LINK command to restore those previous cross-zone relationships, if they are still appropriate.

- If UCLIN is used to update an existing LMOD entry and **only** cross-zone subentries (XZMOD and XZMODP) are changed, SMP/E does not update the LASTUPD and LASTUPDTYPE subentries.

XZMODP
indicates that the load module contains one or more modules from another zone and that XZMOD subentries exist in this LMOD entry.

The UCL operand is **XZMODP**.

- You never need to specify the XZMODP subentry on a UCL statement. SMP/E automatically determines the setting of XZMODP, according to whether the LMOD entry contains XZMOD subentries.
- You cannot add the XZMODP subentry to an LMOD entry that does not contain XZMOD subentries.
- You cannot delete the XZMODP subentry from an LMOD entry containing XZMOD subentries.
- An LMOD entry can contain XZMOD and XZMODP subentries without any other subentries.
- If UCLIN is used to update an existing LMOD entry and **only** cross-zone subentries are changed (XZMOD and XZMODP), SMP/E does not update the LASTUPD and LASTUPDTYPE subentries.

LIST Examples

To list all the LMOD entries in a particular zone, you can use the following commands:

```
SET      BDY(TGT1)          /* Set to requested zone.   */.
LIST     LMOD               /* List all LMOD entries.   */.
```

To list specific LMOD entries, you can use these commands:

```
SET      BDY(TGT1)          /* Set to requested zone.   */.
LIST     LMOD(LMOD01        /* List only these two      */
              LMOD02)       /* entries.                 */.
```

The format of the LIST output for each LMOD entry is the same for both of these commands. The only difference is the number of LMOD entries listed. Figure 33 on page 230 is an example of LIST output for LMOD entries.

LMOD Entry (Distribution and Target Zone)

```
PAGE nnnn  - NOW SET TO zzzzzz ZONE nnnnnnn  DATE mm/dd/yy TIME hh:mm:ss SMP/E 31.nn SMPLIST OUTPUT

TGT1    LMOD      ENTRIES


  NAME

BPXLMOD1  LASTUPD         = HBPX001 TYPE=ADD
          SYSTEM LIBRARY  = BPXLIB1
          LKED ATTRIBUTES = RENT,CASE(MIXED)
          LKED CONTROL    =  ENTRY BPXMOD01
                             ALIAS ../FRIENDLY/NAME/THAT/DOES/NOT/NEED/QUOTES
                             ALIAS '../friendly/name/with a comma,/which/requires/quotes'
                             ALIAS '../friendly/name/with/a/''/which/requires/quotes'

LMOD01    LASTUPD         = JXY1102 TYPE=ADD
          SYSTEM LIBRARY  = LINKLIB
          RETURN CODE     = 4
          LKED ATTRIBUTES = STD
          MODDEL          = MOD05     MOD06
          LKED CONTROL    =  ENTRY MOD01
                             ALIAS LMOD01A1

LMOD02    LASTUPD         = JXY1102 TYPE=ADD
          SYSTEM LIBRARY  = LINKLIB   PPLIB01
          LKED ATTRIBUTES = RENT,REUS,AC=1

LMOD03    LASTUPD         = JXY1102 TYPE=ADD
          SYSTEM LIBRARY  = LINKLIB
          LKED ATTRIBUTES = RENT,REUS,AC=1
          LKED CONTROL    =  ALIAS MOD03
                            *** CHANGE/REPLACE STMTS FOR MOD03 FROM DLIB AOS12
                             CHANGE MOD03C1(NEW03C1)
                             CHANGE MOD03C2(NEW03C2)

LMOD04    LASTUPD         = LINK    TYPE=UPD
          SYSTEM LIBRARY  = LINKLIB
          RETURN CODE     = 4
          LKED ATTRIBUTES = STD
          XZMODP
          XZMOD           =  CICSMOD1 FROM ZONE CICS1
                          =  CICSMOD2 FROM ZONE CICS1
                          =  CICSMOD4 FROM ZONE CICS1
                          =  IMSMOD1  FROM ZONE IMS1
          LKED CONTROL    =  ENTRY MOD04
                             ALIAS LMOD04A1

LMOD05    XZMODP
          XZMOD           =  CICSMOD1 FROM ZONE CICS1
                          =  CICSMOD2 FROM ZONE CICS1
                          =  IMSMOD1  FROM ZONE IMS1

LMOD06    LASTUPD         = JCLIN   TYPE=ADD
          SYSTEM LIBRARY  = LINKLIB
          LKED ATTRIBUTES = SCTR,MAXBLK(6160),AC=1,AMOD=MIN
```

Figure 33. LMOD Entry: Sample LIST Output (Part 1 of 2)

```
LMOD07    LASTUPD         = JCLIN   TYPE=ADD
          SYSTEM LIBRARY  = LINKLIB
          LKED ATTRIBUTES = FETCHOPT(PACK,PRIME),NOCALL
          MODDEL          = ISPLINK   MOD01

LMOD08    LASTUPD         = HXY0001 TYPE=ADD
          SYSTEM LIBRARY  = APPLLIB
          LKED ATTRIBUTES = RENT,REUS
          CALLLIBS        = PLIBASE   CSSLIB

LOTSOPRM  LASTUPD         = UCLIN   TYPE=UPD
          SYSTEM LIBRARY  = LINKLIB
          LKED ATTRIBUTES = RENT,REUS,SCTR,OVLY,XCAL,REFR,DC,NE,AC=1,ALIGN2,AMODE=31,CASE(MIXED),OL,MAXBLK(32760),
                            FETCHOPT(NOPACK,NOPRIME),COMPAT=LKED,NCAL,FILL(00),HOBSET,RMODE=SPLIT,ALIASES(ALL),
                            DYNAM(DLL),UPCASE(YES)
          LKED CONTROL    =  ENTRY DL1MOD2

MODULE1   LASTUPD         = UCLIN   TYPE=ADD
          SYSTEM LIBRARY  = LINKLIB
          LKED ATTRIBUTES = STD
          MODDEL          = MOD1      MOD2

MODUL25   LASTUPD         = UCLIN   TYPE=UPD
          SYSTEM LIBRARY  = LINKLIB
          LKED ATTRIBUTES = STD
```

Figure 33. LMOD Entry: Sample LIST Output (Part 2 of 2)

You can use the LIST command to find out the names of all the distribution library modules that are link-edited into this load module. To include the names of these modules in the LIST output you can use the XREF operand, as shown in these commands:

```
SET      BDY(TGT1)          /* Set to requested zone.   */.
LIST     LMOD               /* List all LMOD entries    */
         XREF               /* and MODs in them.        */.
```

Notes:

1. XREF can be used either in mass mode or in select mode.
2. SMP/E obtains the data included for the XREF operand by checking the LMOD subentries in all the MOD entries. Because this data is not contained in the LMOD entry itself, you cannot use UCLIN to change it in the LMOD entry.

Figure 34 on page 232 is an example of the LIST output produced when the XREF operand is used.

LMOD Entry (Distribution and Target Zone)

```
PAGE nnnn  - NOW SET TO zzzzzz ZONE nnnnnnn  DATE mm/dd/yy TIME hh:mm:ss SMP/E 31.nn SMPLIST OUTPUT

 TGT1    LMOD     ENTRIES


   NAME

BPXLMOD1  LASTUPD         = HBPX001 TYPE=ADD
          SYSTEM LIBRARY  = BPXLIB1
          LKED ATTRIBUTES = RENT,CASE(MIXED)
          LKED CONTROL    =  ENTRY BPXMOD01
                             ALIAS ../FRIENDLY/NAME/THAT/DOES/NOT/NEED/QUOTES
                             ALIAS '../friendly/name/with a comma,/which/requires/quotes'
                             ALIAS '../friendly/name/with/a/''/which/requires/quotes'
           MODULES         = NAME      FMID
                             BPXMOD01  HBPX001

LMOD01     LASTUPD         = JCLIN    TYPE=ADD
           SYSTEM LIBRARY  = SLIB01
           LKED ATTRIBUTES = COPY,RENT,REUS,SCTR,OVLY,EFR,DC,NE,AC=1,ALIGN2,AMODE=24,RMODE=24
           MODULES         = NAME      FMID
                             MODULE2   HXZ1234

LMOD02     LASTUPD         = JCLIN    TYPE=ADD
           SYSTEM LIBRARY  = SLIB02
           LKED ATTRIBUTES = COPY,RENT,REUS,SCTR,OVLY,EFR,DC,NE,AC=1,ALIGN2,AMODE=24,RMODE=24
           MODULES         = NAME      FMID
                             MODULE2   HXZ1234

LMOD03     LASTUPD         = JXY1102  TYPE=ADD
           SYSTEM LIBRARY  = LINKLIB
           LKED ATTRIBUTES = RENT,REUS,AC=1
           LKED CONTROL    =  ALIAS MOD3
                             *** CHANGE/REPLACE STMTS FOR MOD03 FROM DLIB AOS12
                              CHANGE MOD03C1(NEW03C1)
                              CHANGE MOD03C2(NEW03C2)
           MODULES         = NAME      FMID
                             MOD03     JXY1121

LMOD04     LASTUPD         = LINK     TYPE=UPD
           SYSTEM LIBRARY  = LINKLIB
           RETURN CODE     = 4
           LKED ATTRIBUTES = STD
           XZMODP
           XZMOD           =  CICSMOD1 FROM ZONE CICS1
                           =  CICSMOD2 FROM ZONE CICS1
                           =  CICSMOD4 FROM ZONE CICS1
                           =  IMSMOD1  FROM ZONE IMS1
           LKED CONTROL    =  ENTRY MOD04
                           =  ALIAS LMOD04A1
           MODULES         = NAME      FMID
                           = MODULE4   HXZ1234

LMOD05     XZMODP
           XZMOD           =  CICSMOD1 FROM ZONE CICS1
                           =  CICSMOD2 FROM ZONE CICS1
                           =  IMSMOD1  FROM ZONE IMS1
```

Figure 34. LMOD Entry: Sample LIST Output When XREF Is Specified (Part 1 of 2)

```
LMOD06     LASTUPD         = JCLIN   TYPE=ADD
           SYSTEM LIBRARY  = LINKLIB
           LKED ATTRIBUTES = SCTR,MAXBLK(6160),AC=1,AMOD=MIN
           MODULES         = NAME      FMID
                             MODULE5   HXZ1234

LMOD07     LASTUPD         = JCLIN   TYPE=ADD
           SYSTEM LIBRARY  = LINKLIB
           LKED ATTRIBUTES = FETCHOPT(PACK,PRIME),NOCALL
           MODDEL          = ISPLINK   MOD01
           MODULES         = NAME      FMID
                             MODULE6   JXY0001

LMOD08     LASTUPD         = HXY0001 TYPE=ADD
           SYSTEM LIBRARY  = APPLLIB
           LKED ATTRIBUTES = RENT,REUS
           CALLLIBS        = PLIBASE   CSSLIB
           MODULES         = NAME      FMID
                             MODULE7   HXY0001
                             MODULE8   HXY0001

 MODULE1   LASTUPD         = UCLIN    TYPE=UPD
           SYSTEM LIBRARY  = LINKLIB
           LKED ATTRIBUTES = STD
           MODDEL          = MOD1      MOD2
           MODULES         = NAME      FMID
                             MODULE1   ???????

 MODUL25   LASTUPD         = UCLIN    TYPE=UPD
           SYSTEM LIBRARY  = LINKLIB
           LKED ATTRIBUTES = STD
           MODULES         = NAME      FMID
                             MODUL25   HXZ1234
```

Figure 34. LMOD Entry: Sample LIST Output When XREF Is Specified (Part 2 of 2)

UNLOAD Examples

To dump the LMOD entries in UCL format, you can use the UNLOAD command. To unload all the LMOD entries in a particular zone, you can use the following commands:

```
SET      BDY(TGT1)          /* Set to requested zone.   */.
UNLOAD   LMOD               /* Unload all LMOD entries. */.
```

To unload specific LMOD entries, you can use these commands:

```
SET      BDY(TGT1)          /* Set to requested zone.   */.
UNLOAD   LMOD(LMOD01        /* Unload only these two    */
              LMOD02)       /* entries.                 */.
```

The format of the UNLOAD output for each LMOD entry is the same for both of these commands. The only difference is the number of LMOD entries listed. Figure 35 on page 234 is an example of UNLOAD output for LMOD entries.

LMOD Entry (Distribution and Target Zone)

```
UCLIN .
REP       LMOD            ( DL1LMOD  )
          LASTUPD         ( DL1F001 )
          LASTUPDTYPE     ( ADD )
          SYSLIB          ( LINKLIB  )
          SIDEDECKLIB     ( SGOSSD   )
          /* LEPARM    */   RENT REUS RMOD=ANY DYNAM(DLL)
          CALLLIBS        ( SCEELOAD  SEDCBASE )
          /* UTILITY INPUT */
          UTIN            (
                           ( GOSLMOD1 SGOSSD  )
                           ( GOSLMOD2 SGOSSD  )
                                               )
++LMODIN
  ENTRY DL1MOD1
++ENDLMODIN
                          .

REP       LMOD            ( LMOD01   )
          LASTUPD         ( JXY1102 )
          LASTUPDTYPE     ( ADD )
          SYSLIB          ( LINKLIB  )
          RC              ( 4  )
          /* LEPARM    */   STD
          MODDEL          ( MOD05    MOD06  )
++LMODIN
 ENTRY MOD01
 ALIAS LMOD01A1
++ENDLMODIN
                          .
REP       LMOD            ( LMOD02   )
          LASTUPD         ( JXY1102 )
          LASTUPDTYPE     ( ADD )
          SYSLIB          ( LINKLIB   PPLIB01  )
          /* LEPARM    */   RENT REUS AC=1
                          .
REP       LMOD            ( LMOD03   )
          LASTUPD         ( JXY1102 )
          LASTUPDTYPE     ( ADD )
          SYSLIB          ( LINKLIB  )
          /* LEPARM    */   RENT REUS AC=1
++LMODIN
 ALIAS MOD03
 CHANGE MOD03C1(NEW03C1)
 CHANGE MOD03C2(NEW03C2)
 INCLUDE AOS12   (MOD03   )
++ENDLMODIN
                          .
```

Figure 35. LMOD Entry: Sample UNLOAD Output (Part 1 of 3)

```
REP       LMOD            ( LMOD04   )
          LASTUPD         ( LINK    )
          LASTUPDTYPE     ( UPD )
          SYSLIB          ( LINKLIB  )
          RC              ( 4  )
          /* LEPARM    */   STD
          /* CROSS-ZONE*/   XZMODP
          XZMOD           (
                           ( CICSMOD1 CICS1  )
                           ( CICSMOD2 CICS1  )
                           ( IMSMOD1  IMS1   )
                                              )
++LMODIN
 ENTRY MOD01
 ALIAS LMOD04A1
++ENDLMODIN
                          .
REP       LMOD            ( LMOD05   )
          /* CROSS-ZONE*/   XZMODP
          XZMOD           (
                           ( CICSMOD1 CICS1  )
                           ( CICSMOD2 CICS1  )
                           ( IMSMOD1  IMS1   )
                                              )
                          .
REP       LMOD            ( LMOD06   )
          LASTUPD         ( JCLIN   )
          LASTUPDTYPE     ( ADD )
          SYSLIB          ( LINKLIB  )
          /* LEPARM    */   SCTR MAXBLK(6160) AC=1 AMOD=MIN
                          .
REP       LMOD            ( LMOD07   )
          LASTUPD         ( JCLIN   )
          LASTUPDTYPE     ( ADD )
          SYSLIB          ( LINKLIB  )
          MODDEL          ( ISPLINK  MOD01  )
          /* LEPARM    */   FETCHOPT(PACK,PRIME) NOCALL
                          .
REP       LMOD            ( LMOD08   )
          LASTUPD         ( HXY0001 )
          LASTUPDTYPE     ( ADD )
          SYSLIB          ( APPLLIB  )
          /* LEPARM    */   RENT REUS
          CALLLIBS        ( PLIBASE  CSSLIB  )
                          .
```

Figure 35. LMOD Entry: Sample UNLOAD Output (Part 2 of 3)

```
REP       LMOD            ( LOTSOPRM )
          LASTUPD         ( UCLIN   )
          LASTUPDTYPE     ( UPD )
          SYSLIB          ( LINKLIB  )
          /* LEPARM    */   RENT REUS SCTR OVLY XCAL REFR DC NE AC=1
                             ALIGN2 AMODE=31 CASE(MIXED) OL MAXBLK(32760)
                             FETCHOPT(NOPACK,NOPRIME) COMPAT=LKED NCAL
                             FILL(00) HOBSET RMODE=SPLIT ALIASES(ALL)
                             DYNAM(DLL) UPCASE(YES)
++LMODIN
  ENTRY DL1MOD2
++ENDLMODIN
                          .
REP       LMOD            ( MOD04    )
          LASTUPD         ( JXY1102 )
          LASTUPDTYPE     ( ADD )
          SYSLIB          ( LPALIB   )
          /* LEPARM    */   COPY STD
                          .
ENDUCL.
```

Figure 35. LMOD Entry: Sample UNLOAD Output (Part 3 of 3)

UCLIN Examples

You can use the ADD, REP, and DEL UCL statements to change subentries in the LMOD entry. When you use UCLIN to update an LMOD entry, keep these points in mind:

- After the UCLIN changes are made, the LMOD entry must contain at least a SYSLIB subentry. Otherwise, there is not enough information in the entry to indicate where the load module should be installed.
- The input following the ++LMODIN statement replaces all existing link-edit control cards in the LMOD entry. This is different from JCLIN processing, where all control cards are replaced except CHANGE and REPLACE, which are merged with the existing CHANGE and REPLACE control cards.
- If a DEL statement deletes all the existing subentries in the entry, SMP/E deletes the entire entry.
- When SMP/E processes a DEL statement, it does not compare any control cards after the ++LMODIN statement with the control cards that are currently in the LMOD entry. It deletes all the existing control cards.

The following examples are provided to help you use the LMOD entry.

Example 1: Adding a New LMOD Entry

The correct method of adding a new LMOD entry is through JCLIN, so that in addition to the LMOD entry being created, SMP/E also ensures that all related MOD entries are updated. If, however, you want to define a new load module entry using UCL, the following is an example of the minimum information you should provide.

```
SET      BDY(TGT1)          /* Set to target zone.      */.
UCLIN                       /*                          */.
ADD      LMOD(LMOD01)       /* Define new LMOD entry.   */
         SYSLIB(LPALIB      /* System library 1.        */
                PPLIB01)    /* System library 2.        */
         RENT REUS AC=1     /* All link attributes.     */
++LMODIN                    /* All link-edit stmts.     */
 INCLUDE AOS12(MOD01)
 INCLUDE AOS12(MOD02)
 ENTRY MOD01
```

```
 ALIAS LMOD01A1
 NAME LMOD01(R)
++ENDLMODIN
                          /*                          */.
REP      MOD(MOD01)       /* Now fix MOD entries.     */
         DISTLIB(AOS12)   /* MOD DLIB.                */
         FMID(FXY1102)    /* Functional owner.        */
         LMOD(LMOD01)     /* Connect to LMOD.         */
                          /*                          */.
REP      MOD(MOD02)       /* Now fix MOD entries.     */
         DISTLIB(AOS12)   /* MOD DLIB.                */
         FMID(FXY1102)    /* Functional owner.        */
         LMOD(LMOD01)     /* Connect to LMOD.         */
                          /*                          */.
ENDUCL                    /*                          */.
```

Note: In this example, the entire set of control cards needed to link the load module was specified. MOD entries for modules within the load module were also updated.

Example 2: Changing the Link-Edit Attributes of an LMOD

As in the previous example, the correct way to change any part of a LMOD entry is through the use of JCLIN. However, at times, assuming a knowledge of SMP/E and UCL processing, you may decide to use UCL to do it. For this example, assume you have a load module, LMOD99, with link-edit attributes of **RENT REUS**, and that you have made changes so that it is no longer reentrant but is now authorized and will fill uninitialized areas. This change can be made as follows:

```
SET      BDY(TGT1)        /* Set to target zone.      */.
UCLIN                     /*                          */.
DEL      LMOD(LMOD99)     /* Existing LMOD entry.     */
         RENT.            /* Delete RENT attribute.   */
ADD      LMOD(LMOD99)     /* Existing LMOD entry.     */
         AC=1 FILL(00)    /* Add authorization,       */
                          /*  and fill uninitialized  */
                          /*  areas to hex byte 00.   */.
ENDUCL                    /*                          */.
```

Example 3: Deleting a MODDEL Subentry

Suppose load module LMOD03 for product A included module MOD01 from product B, and both products are installed in zone ZOSZN. Product B deleted MOD01 without replacing it, and as a result, SMP/E created a MODDEL subentry for MOD01 in the LMOD entry for LMOD03. You have decided to reintroduce your own version of MOD01, but do not want it relinked into LMOD03. To prevent this relinking, delete the MODDEL subentry from the LMOD entry, as shown below:

```
SET      BDY(ZOSZN)        /* Set to zone.                 */.
UCLIN                     /* Start UCLIN processing.  */.
DEL      LMOD(LMOD03)     /* Identify LMOD entry.     */
         MODDEL(MOD01)    /* Delete MODDEL subentry.  */.
ENDUCL                    /*                          */.
```

Example 4: Completing Cross-Zone Updates

If SMP/E could not complete cross-zone updates for APPLY or RESTORE processing, you may need to use UCLIN to make the remaining changes. (SMP/E issues messages and reports to tell you what cross-zone work you may need to finish.) Here are some examples of using UCLIN to change XZMOD subentries in LMOD entries. Make sure you check the messages and reports to determine whether any additional changes are needed for cross-zone subentries in MOD entries or TARGETZONE entries.

- **Adding XZMOD subentries:** This example adds module IGCXXX from zone ZXXX and module IGCABC from zone ZABC to the IEANUC01 LMOD entry. If

this LMOD entry previously had no XZMOD subentries, SMP/E automatically sets XZMODP to indicate that the LMOD entry now contains XZMOD subentries.

```
SET BDY(ZOSZN)            /* Set to z/OS zone          */.
UCLIN                       /* start UCLIN processing      */.
ADD LMOD(IEANUC01)          /* identify LMOD entry         */
    XZMOD((IGCXXX,ZXXX),    /* add module from ZXXX zone   */
          (IGCABC,ZABC))    /* add module from ZABC zone   */.
ENDUCL                      /* end UCLIN processing        */.
```

- **Replacing XZMOD subentries:** This example replaces all the XZMOD subentries in LMOD entry CICSDIAG with a single subentry for module ISPLINK from zone ZOSZN. If this LMOD entry previously had no XZMOD subentries, SMP/E automatically sets XZMODP to indicate that the LMOD entry now contains XZMOD subentries.

```
SET BDY(CICS1)              /* set to CICS zone            */.
UCLIN                       /* start UCLIN processing      */.
REP LMOD(CICSDIAG)          /* identify LMOD entry         */
    XZMOD((ISPLINK,ZOSZN))   /* replace list with one value  */.
ENDUCL                      /* end UCLIN processing        */.
```

- **Deleting XZMOD subentries:** This example shows how to delete a single XZMOD subentry or all XZMOD subentries.
  - For LMOD entry IMSDIAG1, one XZMOD subentry is deleted. If no XZMOD values are left, SMP/E turns the XZMODP indicator off to indicate that the LMOD entry no longer has XZMOD subentries.
  - For LMOD entry IMSDIAG2, all XZMOD subentries are deleted. SMP/E turns the XZMODP indicator off to indicate that the LMOD entry no longer contains XZMOD subentries.

```
SET BDY(IMS1)               /* set to IMS zone             */.
UCLIN                       /* start UCLIN processing      */.
DEL LMOD(IMSDIAG1)          /* identify LMOD entry         */
    XZMOD((ISPLINK,ZOSZN))   /* delete ISPLINK reference     */
DEL LMOD(IMSDIAG2)          /* identify LMOD entry         */
    XZMOD()                 /* delete entire list          */.
ENDUCL                      /* end UCLIN processing        */.
```

Example 5: Adding a CALLLIBS Subentry List to an LMOD Entry

You can use either the ADD or the REP statement to add a CALLLIBS subentry list to an LMOD entry, depending on whether the CALLLIBS already exists or not. The order in which the libraries are specified is important because it indicates the order in which the SYSLIB concatenation is built. This is shown in the examples that follow.

- **Adding a CALLLIBS subentry:** This example adds a CALLLIBS subentry list containing PLIBASE and APPLIB to LMOD entry LMOD04.

```
SET BDY(ZOSZN)               /* set to z/OS zone             */.
UCLIN                       /* start UCLIN processing      */.
ADD LMOD(LMOD04)            /* identify LMOD entry         */
    CALLLIBS(PLIBASE,APPLIB) /* add CALLLIBS subentry       */.
ENDUCL                      /* end UCLIN processing        */.
```

- **Adding to an existing CALLLIBS subentry:** Suppose LMOD entry LMOD05 has a CALLLIBS subentry list containing PLIBASE and APPLIB, and CSSLIB is to be added to this list. The entire CALLLIBS subentry must be replaced as shown below:

```
SET BDY(ZOSZN)               /* set to z/OS zone             */.
UCLIN                       /* start UCLIN processing      */.
REP LMOD(LMOD05)            /* identify LMOD entry         */
    CALLLIBS(PLIBASE,APPLIB, /*                            */
             CSSLIB)        /*replace entire CALLLIBS      */.
ENDUCL.                     /* end UCLIN processing        */.
```

Note: If an ADD statement is used to try to update an existing CALLLIBS subentry list in an LMOD entry, SMP/E issues an error message.

Example 6: Deleting Link-Edit Control Statements

Suppose you have installed a SYSMOD that was packaged incorrectly and added unwanted link-edit control statements to the LMOD entry for an existing load module. As a result, you now need to delete those statements from the LMOD entry. Here is an example of the UCLIN statements you can use to make this change:

```
SET BDY(ZOSZN)                /* set to z/OS zone             */.
UCLIN                        /* start UCLIN processing       */.
DEL LMOD(LMODXZ)             /* identify LMOD entry          */
++LMODIN                     /* delete all link-edit         */
++ENDLMODIN                  /* control statements.          */.
ENDUCL                       /* end UCLIN processing         */.
```

Using the REP command instead of the DEL command gives you the same result. There is no need to specify the control statements to be deleted. In fact, you cannot selectively delete link-edit control statements from an LMOD entry—you can only delete them all.

Example 7: Adding a UTIN and SIDEDECKLIB Subentry to an LMOD

In this example, a utility input subentry list, containing DSOMCMP1 from library SDSOMSD and DSOMCMP2 from library SDSOMSD, is added to the LMOD entry for load module LMOD1. In addition, a side deck library subentry of SGOSSD is added to the LMOD entry for load module LMOD5.

```
SET BDY(TGT)                 /* Set to target zone.          */.
UCLIN                        /* Start UCLIN processing.      */.
ADD LMOD(LMOD1)              /* Identify LMOD entry.         */
  UTIN((DSOMCMP1,SDSOMSD)    /* Add utility input...         */
       (DSOMCMP2,SDSOMSD))   /*  ...subentry list.           */.
ADD LMOD(LMOD5)              /* Identify LMOD entry.         */
  SIDEDECKLIB(SGOSSD)        /* Add side deck library.       */.
ENDUCL                       /* End UCLIN processing.        */.
```

Example 8: Deleting a UTIN Subentry from an LMOD

In this example, DSOMCMP1 is deleted from the utility input subentry for LMOD entry LMOD2, and the entire utility input subentry list is removed from LMOD entry LMOD3.

```
SET BDY(TGT)                 /* Set to target zone.          */.
UCLIN                        /* Start UCLIN processing.      */.
DEL LMOD(LMOD2)              /* Identify LMOD entry.         */
  UTIN((DSOMCMP1,SDSOMSD))   /* Remove DSOMCMP1 from         */
                             /*  utility input subentry.     */.
DEL LMOD(LMOD3)              /* Identify LMOD entry.         */
  UTIN()                     /* Delete all utility input.    */.
ENDUCL                       /* End UCLIN processing.        */.
```

MAC Entry (Distribution and Target Zone)

The MAC entry describes a macro that exists in the distribution or target macro libraries. A MAC entry is generally created by one of the following methods:

- **Installing a SYSMOD that contains the macro.** MAC entries are created the first time you install a SYSMOD containing a ++MAC statement for a macro that does not yet have a MAC entry.
- **Processing JCLIN.** MAC entries can be built during JCLIN processing when SMP/E scans the assembler statements for inline assemblies to determine which macros are used in that assembly. The name of the assembly is kept in the MAC entry, so when the macro is updated, SMP/E can reassemble the required modules.

  MAC entries can also be built when SMP/E scans copy steps and finds a SELECT statement that specifies TYPE=MAC.

  For additional information, see the “Processing” section of the JCLIN command chapter in the *SMP/E Commands* manual.

SMP/E records the function and service level of each macro in the MAC entry, as well as information about how that macro affects the structure of the distribution or target libraries and modules.

Once a MAC entry exists for a macro, it is updated as subsequent SYSMODs are installed.

Subentries

These are the subentries for the MAC entry as they appear in the LIST output:

name
: is the name of the macro represented by the MAC entry.

  The name can contain from 1 to 8 alphanumeric characters and $, #, @, or hex C0.

DISTLIB
: is the ddname of the macro distribution library.

  The UCL operand is **DISTLIB(***ddname***)**.

  - The ddname can contain from 1 to 8 alphanumeric characters.
  - The DISTLIB subentry is not required when the MAC entry is first defined. For example, during JCLIN processing SMP/E builds MAC entries without a DISTLIB value. However, SMP/E can add a DISTLIB value later when it processes the ++MAC statement. A DISTLIB value is needed at some time to process any changes for the macro.

FMID
: identifies the functional owner of this macro. The functional owner is the last function SYSMOD that replaced this macro.

  The UCL operand is **FMID(***sysmod_id***)**.

  The SYSMOD ID must contain 7 alphanumeric characters.

GENASM
: identifies those assemblies that have to be done during APPLY each time this macro is modified. These assemblies must exist as either ASSEM or SRC entries in the target zone.

  The UCL operand is **GENASM(***name...***)**.

The names can contain from 1 to 8 alphanumeric characters.

LASTUPD
identifies the cause of the last change to this MAC entry.

The UCL operand is **LASTUPD(***value***)**. This subentry can contain one of the following values:

JCLIN
indicates that the change was made during JCLIN command processing.

UCLIN
indicates that the change was made as a result of UCLIN processing.

sysmod-id
indicates that the change was made during the installation of the indicated SYSMOD.

The SYSMOD ID must contain 7 alphanumeric characters.

LASTUPD TYPE
indicates how the entry was last changed.

The UCL operand is **LASTUPDTYPE(***value***)**. This subentry can contain one of the following values:
ADD The entry was added.
MOV The entry was moved.
UPD The entry was updated.

MALIAS
identifies any alias names for this macro.

The UCL operand is **MALIAS(***name*...**)**.

The alias names can contain from 1 to 8 alphanumeric characters.

RMID
identifies the last SYSMOD that **replaced** this macro. Any subsequent SYSMOD that modifies this macro must have a defined relationship (such as PRE or SUP) with this SYSMOD.

The UCL operand is **RMID(***sysmod_id***)**.

- The SYSMOD ID must contain 7 alphanumeric characters.
- If RMID is not specified, but **FMID** is, SMP/E sets the RMID value to the specified FMID.

SYSLIB
is the ddname of the target system macro library.

The UCL operand is **SYSLIB(***ddname***)**.
- Only one SYSLIB value may be specified.
- The ddname can contain from 1 to 8 alphanumeric characters.

UMID
identifies all those SYSMODs that have **updated** this macro since it was last replaced. Any subsequent SYSMOD that modifies this macro must have a defined relationship (such as PRE or SUP) with all these SYSMODs.

The UCL operand is **UMID(***sysmod_id*...**)**.

The SYSMOD ID must contain 7 alphanumeric characters.

LIST Examples

To list all the MAC entries in a particular zone, you can use the following commands:

```
SET      BDY(TGT1)          /* Set to requested zone.   */.
LIST     MAC                /* List all MAC entries.    */.
```

To list specific MAC entries, you can use these commands:

```
SET      BDY(TGT1)          /* Set to requested zone.   */.
LIST     MAC(MAC01          /* List only these two      */
             MAC02)         /* entries.                 */.
```

The format of the LIST output for each MAC entry is the same for both of these commands. The only difference is the number of MAC entries listed. Figure 36 shows an example of LIST output for MAC entries.

```
PAGE nnnn  - NOW SET TO zzzzzz ZONE nnnnnnn  DATE mm/dd/yy TIME hh:mm:ss SMP/E 31.nn SMPLIST OUTPUT

TGT1          MACRO ENTRIES


  NAME

MAC01     LASTUPD         = JXY1102 TYPE=ADD
          LIBRARIES       = DISTLIB=DLIBMAC1  SYSLIB=MACLIB01
          FMID            = JXY1102
          RMID            = JXY1102
          MALIAS          = TERMINAL  TERM      T
          GENASM          = ASSEM01   ASSEM02   SRC01     SRC02

MAC02     LASTUPD         = JXY1000 TYPE=UPD
          LIBRARIES       = DISTLIB=DLIBMAC1  SYSLIB=MACLIB01
          FMID            = JXY1121
          RMID            = UZ00010
          UMID            = UZ00014   UZ00015
          GENASM          = ASSEM01   SRC02
```

Figure 36. MAC Entry: Sample LIST Output

By specifying the FORFMID operand, you can reduce the number of MAC entries listed. When FORFMID is specified, SMP/E lists a MAC entry only if its FMID matches one of the FMIDs specified on the FORFMID operand. For example, to list MAC entries whose FMIDs either are defined in FMIDSET TP or are JXY1102, you can use these commands:

```
SET      BDY(TGT1)          /* Set to target zone.      */.
LIST     MAC                /* List all macro entries   */
         FORFMID(TP         /* for the TP FMIDSET       */
                 JXY1102)   /* and FMID JXY1102.        */.
```

You can use the LIST command to find out the names of all SYSMODs that have modified a macro. To include the names of these SYSMODs in the LIST output, you can use the XREF operand, as shown in these commands:

```
SET      BDY(TGT1)          /* Set to requested zone.   */.
LIST     MAC                /* List all macro entries   */
         XREF               /* and related SYSMODs.     */.
```

Notes:

1. XREF can be used either in mass mode or in select mode.

2. SMP/E obtains the data included for the XREF operand by checking for MAC and MACUPD entries for this macro in all the SYSMOD entries. Because this data is not contained in the MAC entry itself, you cannot use UCLIN to change it in the MAC entry.

Figure 37 is an example of the LIST output produced when the XREF operand is used.

```
PAGE nnnn  - NOW SET TO zzzzzz ZONE nnnnnnn  DATE mm/dd/yy TIME hh:mm:ss SMP/E 31.nn SMPLIST OUTPUT

TGT1          MACRO ENTRIES


  NAME

MAC01     LASTUPD         = JXY1102 TYPE=ADD
          LIBRARIES       = DISTLIB=DLIBMAC1  SYSLIB=MACLIB01
          FMID            = JXY1102
          RMID            = JXY1102
          MALIAS          = TERMINAL  TERM      T
          GENASM          = ASSEM01   ASSEM02   SRC01     SRC02
          SYSMOD HISTORY  = SYSMOD   TYPE      DATE   MCS     --STATUS--
                            JXY1102  FUNCTION 01.100  MAC     APP    ACC

MAC02     LASTUPD         = JXY1000 TYPE=UPD
          LIBRARIES       = DISTLIB=DLIBMAC1  SYSLIB=MACLIB01
          FMID            = JXY1121
          RMID            = UZ00010
          UMID            = UZ00014   UZ00015
          GENASM          = ASSEM01   SRC02
          SYSMOD HISTORY  = SYSMOD   TYPE      DATE   MCS     --STATUS--
                            JXY1102  FUNCTION 01.100  MAC     APP    ACC
                            JXY1121  FUNCTION 01.150  MAC     APP    ACC
                            UZ00010  PTF      01.150  MAC     APP
                            UZ00014  PTF      01.160  MACUPD  APP
                            UZ00015  PTF      01.161  MACUPD  APP
```

Figure 37. MAC Entry: Sample LIST Output When XREF Is Specified

UNLOAD Examples

To dump the MAC entries in UCL format, you can use the UNLOAD command. To unload all the MAC entries in a particular zone, you can use the following commands:

```
SET      BDY(TGT1)          /* Set to requested zone.   */.
UNLOAD   MAC                /* Unload all MAC entries.  */.
```

To unload specific MAC entries, you can use these commands:

```
SET      BDY(TGT1)          /* Set to requested zone.   */.
UNLOAD   MAC(MAC01          /* Unload only these two    */
             MAC02).        /* entries.                 */.
```

The format of the UNLOAD output for each MAC entry is the same for both of these commands. The only difference is the number of MAC entries listed. Figure 38 on page 244 is an example of UNLOAD output for MAC entries.

MAC Entry (Distribution and Target Zone)

```
UCLIN .
REP       MAC             ( MAC01    )
          LASTUPD         ( JXY1102  )
          LASTUPDTYPE     ( ADD )
          DISTLIB         ( DLIBMAC1 )
          SYSLIB          ( MACLIB01 )
          FMID            ( JXY1102 )
          RMID            ( JXY1102 )
          MALIAS          ( TERMINAL  TERM      T        )
          GENASM          ( ASSEM01   ASSEM02   SRC01     SRC02    )
                          .
REP       MAC             ( MAC02    )
          LASTUPD         ( JXY1121  )
          LASTUPDTYPE     ( UPD )
          DISTLIB         ( DLIBMAC1 )
          SYSLIB          ( MACLIB01 )
          FMID            ( JXY1121 )
          RMID            ( UZ00010 )
          UMID            ( UZ00014   UZ00015  )
          GENASM          ( ASSEM01   SRC02    )
                          .
ENDUCL.
```

Figure 38. MAC Entry: Sample UNLOAD Output

By specifying the FORFMID operand, you can reduce the number of MAC entries unloaded. When FORFMID is specified, SMP/E unloads a MAC entry only if its FMID matches one of the FMIDs specified on the FORFMID operand. For example, to unload MAC entries whose FMIDs either are defined in FMIDSET TP or are JXY1102, you can use these commands:

```
SET      BDY(TGT1)          /* Set to target zone.      */.
UNLOAD   MAC                /* Unload all macro entries */
         FORFMID(TP         /* for the TP FMIDSET       */
                 JXY1102)   /* and FMID JXY1102.        */.
```

UCLIN Examples

You can use the ADD, REP, and DEL UCL statements to change subentries in the MAC entry. After the UCLIN changes are made, the MAC entry must contain at least the following subentries:

- FMID
- RMID

Otherwise, there is not enough information in the entry to process the macro. If any of these subentries are missing, SMP/E does not make the requested UCL updates to the entry, and the entry remains as it was before the UCL command.

The following examples are provided to help you use the MAC entry.

Example 1: Adding a New MAC Entry

Defining a new macro entry with UCL is very seldom required; generally, MAC entries are created from the information specified on the ++MAC statements contained in the SYSMODs when SYSMODs are installed. If, however, you want to use UCL in defining a new macro entry, the following is an example of the minimum information you should provide:

```
SET      BDY(TGT1)          /* Set to target zone.        */.
UCLIN                       /*                            */.
ADD      MAC(MAC01)         /* Define new macro entry.    */
         DISTLIB(AMACLIB)   /* Define DLIB,               */
         SYSLIB(MACLIB)     /* system library
                               (never the SMPMTS or MTS). */
```

```
         FMID(ZUSR001)      /* Functional owner (in this
                               example a user function).  */
                            /*                            */.
ENDUCL                      /*                            */.
SET      BDY(DLB1).         /* Now do same to DLIB.       */
UCLIN                       /*                            */.
ADD      MAC(MAC01)         /* Define new macro entry.    */
         DISTLIB(AMACLIB)   /* Define DLIB.               */
                            /* No SYSLIB info in DLIB.    */
         FMID(ZUSR001)      /* Functional owner (in this
                               example a user function).  */
                            /*                            */.
ENDUCL                      /*                            */.
```

Example 2: Defining an Alias for an Existing Macro

The following defines the method of adding an alias to an existing macro:

```
SET      BDY(TGT1)          /* Set to target zone.      */.
UCLIN                       /*                          */.
ADD      MAC(MAC01)         /* Existing macro entry.    */
         MALIAS(MAC01AL1)   /* New alias name.          */
                            /* End of adding macro.     */.
ENDUCL                      /*                          */.
SET      BDY(DLB1)          /* Now do same thing to
                               appropriate DLIB.        */.
UCLIN                       /*                          */.
ADD      MAC(MAC01)         /* Existing macro entry.    */
         MALIAS(MAC01AL1)   /* New alias name.          */
                            /* End of adding macro.     */.
ENDUCL                      /*                          */.
```

Note: This UCL does not create an alias entry in the target or distribution libraries; that must be done outside of SMP/E using standard utilities. This ensures that, when the macro is subsequently modified, both the major entry and the alias entry are updated.

MCS Entry (SMPPTS)

The MCS entry is a copy of a SYSMOD exactly as it was received from the SMPPTFIN data set. The MCS entry is in the SMPPTS data set, which is used as a warehouse for SYSMODs. When SMP/E receives a SYSMOD, it stores the SYSMOD as a separate member in the SMPPTS. The member name matches the SYSMOD ID, and each member is an MCS entry. SMP/E also creates a SYSMOD entry in the global zone to describe the SYSMOD that was received. Thus, the MCS entry and the global zone SYSMOD entry are closely related.

When SMP/E accepts or applies SYSMODs, it gets them from the MCS entries in the SMPPTS. An MCS entry is generally kept in the SMPPTS until the associated SYSMOD is accepted; then the entry is deleted.

- You may want SMP/E to save the MCS entries after ACCEPT processing, for example, if you plan to do a system generation. To do this, specify **NOPURGE** in the OPTIONS entry that is in effect during ACCEPT processing.
- Likewise, you may want to save the MCS entries after RESTORE processing. To do this, specify **NOREJECT** in the OPTIONS entry that is in effect during RESTORE processing.

Subentries

The MCS entry contains no SMP/E data and appears to the system as a member of a normal partitioned data set.

LIST Examples

To list all the MCS entries in the SMPPTS, you can use the following commands:

```
SET      BDY(GLOBAL)        /* Set to global.           */.
LIST     MCS                /* List all MCS entries.    */.
```

To list specific MCS entries, you can use these commands:

```
SET      BDY(GLOBAL)        /* Set to global.           */.
LIST     MCS(UZ12345,       /* List only these two      */
             UZ12346)       /* entries.                 */.
```

The format of the LIST output for each MCS entry is the same for both of these commands. The only difference is the number of MCS entries listed.

Figure 39 on page 247 is an example of LIST output for MCS entries.

```
PAGE nnnn  - NOW SET TO zzzzzz ZONE nnnnnnn  DATE mm/dd/yy TIME hh:mm:ss SMP/E 31.nn SMPLIST OUTPUT

SMPPTS        MCS ENTRIES


  NAME

UZ12345   MCS             = ++PTF(UZ12345).
                            ++VER(Z038) FMID(JXY1102).
                            ++MOD(XYMOD01) DISTLIB(AOS12).

UZ12346   MCS             = ++PTF(UZ12346).
                            ++VER(Z038) FMID(FXY1102).
                            ++JCLIN.
                            //JOB      JOB 'accounting info',MSGLEVEL=(1,1)
                            //STEP1    EXEC PGM=IEBCOPY
                            //MACLIB   DD DSN=SYS1.MACLIB,DISP=SHR
                            //AMACLIB  DD DSN=SYS1.AMACLIB,DISP=SHR
                            //SYSIN    DD *
                             COPY INDD=AMACLIB,OUTDD=MACLIB
                            /*
                            ++MAC(MAC01) DISTLIB(AMACLIB).
```

Figure 39. MCS Entry: Sample LIST Output

As the example for UZ12346 shows, SMP/E includes inline JCLIN when listing the MCS entries.

You can use various SYSMOD-related LIST operands to limit which MCS entries are listed. For more information, see “SYSMOD Entry (Distribution and Target Zone)” on page 291 and “SYSMOD Entry (Global Zone)” on page 304.

In addition to the LIST command, you can use standard system utility programs (such as IEBGENER, IEBPTPCH, IEHLIST, and so on) or products such as ISPF to display these entries or information about the data set.

UCLIN Examples

You cannot use UCLIN to add, update, or delete MCS entries. However, you can use the REJECT command to delete MCS entries. For more information on the REJECT command, see the *SMP/E Commands* manual.

Do not use system utility programs to update MCS entries. The global zone SYSMOD entry is coordinated with the MCS entry. Any changes to the MCS entry made outside of SMP/E may get these entries out of synchronization and can result in unpredictable results when the associated SYSMOD is processed.

MOD Entry (Distribution and Target Zone)

The MOD entry describes a particular module, its function and service level, and how it relates to a load module in the target library. A MOD entry is generally created by one of the following methods:

- **Installing a SYSMOD that contains the module.** MOD entries are created the first time you install a SYSMOD that contains a ++MOD statement for a module that does not yet have a MOD entry. If the module comes from a copied distribution library, SMP/E also builds an LMOD entry with the same name. For additional information about copied libraries and the creation of LMOD entries, see "DLIB Entry (Distribution and Target Zone)" on page 191 and the *SMP/E Commands* manual.

  A MOD entry can also be created when you install a SYSMOD that causes the assembled source to be linked to the distribution library. This can happen when a SYSMOD contains both a ++MOD and a ++SRC statement for the same module, or when the DISTMOD operand is specified on the ++SRC statement.
- **Processing JCLIN.** MOD entries can be built during JCLIN processing when SMP/E scans the link-edit and copy steps. A MOD entry built during JCLIN processing is always associated with an LMOD entry. Thus, when the module is changed, SMP/E can determine which load modules are affected. For additional information, see the "Processing" section of the JCLIN command chapter in the *SMP/E Commands* manual.

Subentries

These are the subentries for the MOD entry as they appear in the LIST output:

name
: is the name of the module represented by the MOD entry.

  The name can contain from 1 to 8 alphanumeric characters and $, #, @, or hex C0.

ASSEMBLE
: indicates that the source for this module must always be assembled, even if the object module is supplied in the SYSMOD.

  The UCL operand is **ASSEMBLE**.

CSECT
: specifies the CSECTs present in this module.

  The UCL operand is **CSECT(***name*...**)**.

  - The CSECT subentry is not required. However, if CSECT is missing, SMP/E assumes that the module contains only one CSECT, whose name matches the module name.
  - A CSECT name can contain from 1 to 8 characters.

    The name can contain any characters except the following:
    Comma ,
    Left parenthesis (
    Right parenthesis)
    Blank
  - Comments are not allowed within a CSECT name. For example, the following is not allowed:

    ```
    CSECT ( /* this is a csect name */ CSECT01)
    ```

    The comment is interpreted as part of the CSECT name, instead of a comment.

- The list of CSECT names must include all of the CSECTs in the module, even if one of the CSECTs matches the module name.
- Once a ++MOD with the CSECT operand is processed, SMP/E saves the CSECT information in the MOD entry. From then on, SMP/E uses that saved information if it is not supplied on subsequent SYSMODs.
- If a module is changed from multiple CSECTs to a single CSECT that matches the module name, the CSECT operand must be specified with one name in order to get SMP/E to store that information in the MOD entry.

DALIAS
specifies the alias name for the module, where the alias exists only in the distribution library.

The UCL operand is **DALIAS(***name***)**.

The DALIAS name can contain from 1 to 8 alphanumeric characters.

DISTLIB
is the ddname of the module distribution library.

The UCL operand is **DISTLIB(***ddname***)**.

The ddname can contain from 1 to 8 alphanumeric characters.

FMID
identifies the functional owner of this module. The functional owner is the last function SYSMOD that replaced this module.

The UCL operand is **FMID(***sysmod_id***)**.

- The SYSMOD ID must contain 7 alphanumeric characters.
- Some MOD entries, specifically those associated with a system generation assembly, may have no functional owner. The DISTLIB for these modules is SYSPUNCH. They may have either no FMID, or one of the following values:
  - If the module has no functional owner but was assembled during system generation, ***SYSGEN** appears as the FMID.
  - If the module has no functional owner and was not assembled during system generation, **???????** appears as the FMID.

LASTUPD
identifies the cause of the last change to this MOD entry.

Note: If a given UCLIN command specifies only cross-zone subentries, this field is not changed.

The UCL operand is **LASTUPD(***value***)**. This subentry can contain one of the following values:

JCLIN
indicates that the change was made during JCLIN command processing.

UCLIN
indicates that the change was made as a result of UCLIN processing.

sysmod-id
indicates that the change was made during installation of the specified SYSMOD. The SYSMOD did one of the following:

- Contained inline JCLIN that affected the module
- Changed the distribution library for the module through the DISTLIB operand on the ++MOD statement

- Added the module to an existing load module through the LMOD operand on the ++MOD statement

The SYSMOD ID must contain 7 alphanumeric characters.

LASTUPD TYPE
indicates how the entry was last changed.

Note: If a given UCLIN command specifies only cross-zone subentries, this field is not changed.

The UCL operand is **LASTUPDTYPE(***value***)**. This subentry can contain one of the following values:
ADD The entry was added.
DEL A subentry in the entry was deleted.
MOV The module was moved.
UPD The entry was updated.

LKED ATTRIBUTES
identifies the link-edit attributes that must be used when this module is link-edited. SMP/E supports the following link-edit attributes. For more information, see *z/OS DFSMS Program Management*.

AC=1 specifies that the AC=1 parameter, which is the authorization code, is to be passed to the link-edit utility when the module is link-edited.

The UCL operand is **AC=1**.

ALIGN2
specifies that the ALIGN2 parameter (alignment on a 2KB boundary) is to be passed to the link-edit utility when the module is link-edited.

The UCL operand is **ALIGN2** or **ALN2**.

AMODE=24
specifies that the AMODE=24 parameter is to be passed to the link-edit utility when the module is link-edited.

The UCL operand is **AMODE=24** or **AMOD=24**.

AMODE=31
specifies that the AMODE=31 parameter is to be passed to the link-edit utility when the module is link-edited.

The UCL operand is **AMODE=31** or **AMOD=31**.

AMODE=64
specifies that the AMODE=64 parameter is to be passed to the link-edit utility when the module is link-edited.

The UCL operand is **AMODE=64** or **AMOD=64**.

AMODE=ANY
specifies that the AMODE=ANY parameter is to be passed to the link-edit utility when the module is link-edited.

The UCL operand is **AMODE=ANY** or **AMOD=ANY**.

AMODE=MIN
specifies that the AMODE=MIN parameter is to be passed to the link-edit utility when the module is link-edited.

The UCL operand is **AMODE=MIN** or **AMOD=MIN**.

COMPAT
specifies that the COMPAT parameter is to be passed to the link-edit utility when the module is link-edited.

The UCL operand is **COMPAT=LKED|PM1|PM2|PM3|PM4**.

DC specifies that the DC parameter, which is the downward compatible attribute, is to be passed to the link-edit utility when the module is link-edited.

The UCL operand is **DC**.

FETCHOPT
specifies that the FETCHOPT parameter is to be passed to the link-edit utility when the module is link-edited.

The UCL operand is **FETCHOPT(PACK|NOPACK, PRIME|NOPRIME)**.

FILL specifies that the FILL parameter is to be passed to the link-edit utility when the module is link-edited.

The UCL operand is **FILL(***nn***)**, where *nn* is the 2-character representation of a single hex byte (00 - FF).

HOBSET
specifies that the HOBSET parameter is to be passed to the link-edit utility when the module is link-edited.

The UCL operand is **HOBSET**.

MAXBLK
specifies that the MAXBLK parameter is to be passed to the link-edit utility when the module is link-edited.

The UCL operand is **MAXBLK(***nnnnn***)**, where *nnnnn* is a number between 256 and 32760.

NE specifies that the NE parameter, which is the noneditable attribute, is to be passed to the link-edit utility when the module is link-edited.

The UCL operand is **NE**.

NOCALL
specifies that the NCAL parameter is to be passed to the link-edit utility when the module is link-edited.

The UCL operand is **NOCALL** or **NCAL**.

OL specifies that the OL parameter is to be passed to the link-edit utility when the module is link-edited.

The UCL operand is **OL**.

OVLY specifies that the OVLY parameter, which specifies that the module is in overlay structure, is to be passed to the link-edit utility when the module is link-edited.

The UCL operand is **OVLY**.

REFR
specifies that the REFR parameter, which is the refreshable attribute, is to be passed to the link-edit utility when the module is link-edited.

The UCL operand is **REFR**.

RENT
specifies that the RENT parameter, which indicates that the module is reentrant, is to be passed to the link-edit utility when the module is link-edited.

The UCL operand is **RENT**.

REUS
specifies that the REUS parameter, which indicates that the module is reusable, is to be passed to the link-edit utility when the module is link-edited.

The UCL operand is **REUS**.

REUS(NONE)
specifies that the REUS(NONE) parameter, which indicates that the module cannot be reused, is to be passed to the link-edit utility when the module is link-edited.

The UCL operand is **REUS(NONE)**.

RMODE=24
specifies that the RMODE=24 parameter is to be passed to the link-edit utility when the module is link-edited.

The UCL operand is **RMODE=24** or **RMOD=24**.

RMODE=ANY
specifies that the RMODE=ANY parameter is to be passed to the link-edit utility when the module is link-edited.

The UCL operand is **RMODE=ANY** or **RMOD=ANY**.

RMODE=SPLIT
specifies that the RMODE=SPLIT parameter is to be passed to the link-edit utility when the module is link-edited.

The UCL operand is **RMODE=SPLIT** or **RMOD=SPLIT**.

SCTR
specifies that the SCTR parameter, which indicates that the module can be scatter-loaded, is to be passed to the link-edit utility when the module is link-edited.

The UCL operand is **SCTR**.

STD is a special SMP/E indication that the module should be link-edited with none of the previously listed attributes.

When this indicator is present and a link-edit is to be done, SMP/E will pass the link-edit utility only those parameters specified in the appropriate link-edit UTILITY entry.

The UCL operand is **STD**.

UPCASE
specifies that the UPCASE parameter, which indicates how the Binder should process symbol names, is to be passed to the link-edit utility when the module is link-edited.

The UCL operand is **UPCASE(YES|NO)**.
- UPCASE(YES) and UPCASE(NO) are mutually exclusive.

LMOD
specifies the names of the load modules into which this module was copied or link-edited on the target system.

The UCL operand is **LMOD(***name*...**)**.

- The load module names can contain from 1 to 8 alphanumeric characters.
- If there are no LMOD names in a MOD entry, SMP/E assumes that the module was not selected when the SYSMOD containing the module was initially installed. Therefore, during APPLY processing, SMP/E will not link or copy the module into any target library.

RMID
identifies the last SYSMOD that **replaced** this module. Any subsequent SYSMOD that modifies this module must have a defined relationship (such as PRE or SUP) with this SYSMOD.

The UCL operand is **RMID(***sysmod_id***)**.

- The SYSMOD ID must contain 7 alphanumeric characters.
- If **RMID** is not specified, but **FMID** is, SMP/E sets the RMID subentry to the FMID value.
- RMID is not required for a module assembled during system generation. The DISTLIB for these modules is SYSPUNCH.

RMIDASM
specifies that the last replacement (RMID) to the module was done by a SYSMOD that caused an assembly of the module as a result of a source or macro modification.

The UCL operand is **RMIDASM**.

TALIAS
specifies one or more alias names for the module, where the alias exists in the distribution library and, for copied modules, also in the target library.

The UCL operand is **TALIAS(***name*...**)**.

The alias names can contain from 1 to 8 alphanumeric characters.

UMID
identifies all those SYSMODs that have **updated** this module since it was last replaced. Any subsequent SYSMOD that modifies this module must have a defined relation (such as PRE or SUP) with all these SYSMODs.

The UCL operand is **UMID(***sysmod_id*...**)**.

The SYSMOD ID must contain 7 alphanumeric characters.

XZLMOD
specifies one or more load modules in other zones into which this module was added by the LINK command. The name of the zone supplying each module is also indicated.

The UCL operand is **XZLMOD((***load module,zone*)...**)**.

- The zone name specified for an XZLMOD subentry cannot match the name of the set-to zone.
- An entry can contain XZLMOD and XZLMODP subentries without any other subentries.
- If UCLIN is used to update an existing MOD entry and **only** cross-zone subentries are changed (XZLMOD and XZLMODP), SMP/E does not update the LASTUPD and LASTUPDTYPE subentries.

- The XZLMOD subentry is added to a MOD entry automatically during LINK command processing. However, it is **never** automatically removed.

XZLMODP
indicates that this module has been linked into one or more load modules controlled by a different target zone, and that XZLMOD subentries exist in this MOD entry.

The UCL operand is **XZLMODP**.

- It is never necessary to specify the XZLMODP subentry on a UCL statement. SMP/E automatically determines the setting of XZLMODP, according to whether the MOD entry contains XZLMOD subentries.
- You cannot add the XZLMODP subentry to a MOD entry that does not contain XZLMOD subentries.
- You cannot delete the XZLMODP subentry from a MOD entry containing XZLMOD subentries.
- An entry can contain XZLMOD and XZLMODP subentries without any other subentries.
- If UCLIN is used to update an existing MOD entry and **only** cross-zone subentries are changed (XZLMOD and XZLMODP), SMP/E does not update the LASTUPD and LASTUPDTYPE subentries.

LIST Examples

To list all the MOD entries in a particular zone, you can use the following commands:

```
SET      BDY(TGT1)          /* Set to requested zone.   */.
LIST     MOD                /* List all MOD entries.    */.
```

To list specific MOD entries, you can use these commands:

```
SET      BDY(TGT1)          /* Set to requested zone.   */.
LIST     MOD(MOD01          /* List only these two      */
             MOD02)         /* entries.                 */.
```

The format of the LIST output for each MOD entry is the same for both of these commands. The only difference is the number of MOD entries listed. The following examples show LIST output for MOD entries. Figure 40 on page 255 does not have cross-zone subentries. Figure 41 on page 256 does.

```
PAGE nnnn  - NOW SET TO zzzzzz ZONE nnnnnnn  DATE mm/dd/yy TIME hh:mm:ss SMP/E 31.nn SMPLIST OUTPUT

TGT1          MODULE ENTRIES

  NAME

ASSEM01   LASTUPD         = JCLIN   TYPE=ADD
          LIBRARIES       = DISTLIB=SYSPUNCH
          LMOD            = LMOD99A   LMOD99B

ASSEM02   LASTUPD         = JCLIN   TYPE=ADD
          LIBRARIES       = DISTLIB=SYSPUNCH
          LMOD            = ASSEM02

DL1MOD1   LASTUPD         = DL1F001 TYPE=ADD
          LIBRARIES       = DISTLIB=DLIB3
          FMID            = DL1F001
          RMID            = DL1F001
          LMOD            = DL1LMOD

MOD01     LASTUPD         = JXY1102 TYPE=ADD
          LIBRARIES       = DISTLIB=AOS12
          FMID            = JXY1102
          RMID            = JXY1102
          CSECT           = MOD01C1   MOD01C2   MOD01C3
          LMOD            = LMOD01

MOD02     LASTUPD         = JXY1102 TYPE=ADD
          LIBRARIES       = DISTLIB=AOS12
          FMID            = JXY1102
          RMID            = JXY1102
          CSECT           = MOD02C1
          LMOD            = LMOD01    LMOD02

MOD03     LASTUPD         = JXY1121 TYPE=UPD
          LIBRARIES       = DISTLIB=AOS12
          FMID            = JXY1121
          RMID            = JXY1121
          UMID            = UZ00010   UZ00014
          LMOD            = LMOD03

MOD04     LASTUPD         = JXY1121 TYPE=UPD
          LIBRARIES       = DISTLIB=AOS12
          ASSEMBLE
          FMID            = JXY1121
          RMID            = JXY1121
                            RMIDASM
          LMOD            = MOD04

MOD05     LASTUPD         = JXY0001 TYPE=ADD
          LIBRARIES       = DISTLIB=DLIB1
          FMID            = JXY0001
          RMID            = JXY0001

MOD06     LASTUPD         = JXY0001 TYPE=ADD
          LIBRARIES       = DISTLIB=DLIB1
          FMID            = JXY0001
          RMID            = JXY0001
```

Figure 40. MOD Entry: Sample LIST Output (No Cross-Zone Subentries)

MOD Entry (Distribution and Target Zone)

```
PAGE nnnn  - NOW SET TO zzzzzz ZONE nnnnnnn  DATE mm/dd/yy TIME hh:mm:ss SMP/E 31.nn SMPLIST OUTPUT

NOW SET TO TARGET ZONE CICS1

CICS1         MODULE ENTRIES

  NAME

CICSMOD1  LASTUPD         = LINK    TYPE=UPD
          LIBRARIES       = DISTLIB=ARESLIB
          FMID            = HCI1703
          RMID            = HCI1703
          LMOD            = CICSMOD1
          XZLMODP
          XZLMOD          = LMOD01   IN ZONE ZOSZNA
                            LMOD02   IN ZONE ZOSZNA
                            LMOD01   IN ZONE ZOSZNB

CICSMOD2  LASTUPD         = LINK    TYPE=UPD
          LIBRARIES       = DISTLIB=ARESLIB
          FMID            = HCI1703
          RMID            = HCI1703
          LMOD            = CICSMOD2
          XZLMODP
          XZLMOD          = LMOD01   IN ZONE ZOSZNA
                            LMOD02   IN ZONE ZOSZNA
                            LMODAA01 IN ZONE ZOSZNB
                            LMOD01   IN ZONE ZOSZNB

CICSMOD3  LASTUPD         = HCI1703 TYPE=ADD
          LIBRARIES       = DISTLIB=ARESLIB
          FMID            = HCI1703
          RMID            = HCI1703
          LMOD            = CICSLMD2

CICSMOD4  XZLMODP
          XZLMOD          = LMOD01   IN ZONE ZOSZNA
                            LMOD01   IN ZONE ZOSZNB
```

Figure 41. MOD Entry: Sample LIST Output (Cross-Zone Entries)

By specifying the FORFMID operand, you can reduce the number of MOD entries listed. When **FORFMID<** is specified, SMP/E lists a MOD entry only if its FMID matches one of the FMIDs specified on the FORFMID operand. For example, to list MOD entries whose FMIDs are either defined in FMIDSET TP or are JXY1102, you can use these commands:

```
SET      BDY(TGT1)          /* Set to target zone.      */.
LIST     MOD                /* List all MOD entries     */
         FORFMID(TP         /* for the TP FMIDSET       */
                 JXY1102)   /* and FMID JXY1102.        */.
```

You can also use the LIST command to find out the names of all SYSMODs that have updated a module. To include the names of these SYSMODs in the LIST output, you can use the XREF operand, as shown in these commands:

```
SET      BDY(TGT1)          /* Set to requested zone.   */.
LIST     MOD                /* List all module entries  */
         XREF               /* and related SYSMODs.     */.
```

Notes:

1. XREF can be used either in mass mode or in select mode.
2. SMP/E obtains the data included for the XREF operand by checking all the SYSMOD entries to find which SYSMODs contained ++MOD or ++ZAP

statements for this module. Because this data is not contained in the MOD entry itself, you cannot use UCLIN to change it in the MOD entry.

Figure 42 is an example of the LIST output produced when the XREF operand is used.

```
PAGE nnnn  - NOW SET TO zzzzzz ZONE nnnnnnn  DATE mm/dd/yy TIME hh:mm:ss SMP/E 31.nn SMPLIST OUTPUT

TGT1          MODULE ENTRIES


  NAME

ASSEM01   LASTUPD         = JCLIN   TYPE=ADD
          LIBRARIES       = DISTLIB=SYSPUNCH
          LMOD            = LMOD99A   LMOD99B

ASSEM02   LASTUPD         = JCLIN   TYPE=ADD
          LIBRARIES       = DISTLIB=SYSPUNCH
          LMOD            = ASSEM02
MOD01     LASTUPD         = JXY1102 TYPE=ADD
          LIBRARIES       = DISTLIB=AOS12
          FMID            = JXY1102
          RMID            = JXY1102
          CSECT           = MOD01C1   MOD01C2   MOD01C3
          LMOD            = LMOD01
          SYSMOD HISTORY  = SYSMOD   TYPE      DATE   MCS     --STATUS--
                            JXY1102  FUNCTION 01.100  MOD     APP    ACC
MOD02     LASTUPD         = JXY1102 TYPE=ADD
          LIBRARIES       = DISTLIB=AOS12
          FMID            = JXY1102
          RMID            = JXY1102
          CSECT           = MOD02C1
          LMOD            = LMOD01    LMOD02
          SYSMOD HISTORY  = SYSMOD   TYPE      DATE   MCS     --STATUS--
                            JXY1102  FUNCTION 01.100  MOD     APP    ACC
MOD03     LASTUPD         = JXY1121 TYPE=UPD
          LIBRARIES       = DISTLIB=AOS12
          FMID            = JXY1121
          RMID            = JXY1121
          UMID            = UZ00010   UZ00014
          LMOD            = LMOD03
          SYSMOD HISTORY  = SYSMOD   TYPE      DATE   MCS     --STATUS--
                            JXY1102  FUNCTION 01.100  MOD     APP    ACC
                            JXY1121  FUNCTION 01.150  MOD     APP    ACC
                            UZ00010  PTF      01.150  ZAP     APP
                            UZ00014  PTF      01.160  ZAP     APP

MOD04     LASTUPD         = JXY1121 TYPE=UPD
          LIBRARIES       = DISTLIB=AOS12
          ASSEMBLE
          FMID            = JXY1121
          RMID            = JXY1121
                            RMIDASM
          LMOD            = MOD04
          SYSMOD HISTORY  = SYSMOD   TYPE      DATE   MCS     --STATUS--
                            JXY1102  FUNCTION 01.100  MOD     APP    ACC
                            JXY1121  FUNCTION 01.150  ASSEM   APP    ACC
```

Figure 42. MOD Entry: Sample LIST Output When XREF Is Specified

UNLOAD Examples

To dump the MOD entries in UCL format, you can use the UNLOAD command. To unload all the MOD entries in a particular zone, you can use the following commands:

```
SET      BDY(TGT1)          /* Set to requested zone.   */.
UNLOAD   MOD                /* Unload all MOD entries.  */.
```

To unload specific MOD entries, you can use these commands:

```
SET      BDY(TGT1)          /* Set to requested zone.   */.
UNLOAD   MOD(MOD01          /* Unload only these two    */
             MOD02)         /* entries.                 */.
```

The format of the UNLOAD output for each MOD entry is the same for both of these commands. The only difference is the number of MOD entries unloaded. The following examples show UNLOAD output for MOD entries. Figure 43 does not have cross-zone subentries. Figure 44 on page 260 does.

```
UCLIN .
REP       MOD             ( ASSEM01  )
          LASTUPD         ( JCLIN    )
          LASTUPDTYPE     ( ADD )
          DISTLIB         ( SYSPUNCH )
          LMOD            ( LMOD99A   LMOD99B  )
                          .
REP       MOD             ( ASSEM02  )
          LASTUPD         ( JCLIN    )
          LASTUPDTYPE     ( ADD )
          DISTLIB         ( SYSPUNCH )
          LMOD            ( ASSEM02  )
                          .

REP       MOD             ( DL1MOD1  )
          LASTUPD         ( DL1F001 )
          LASTUPDTYPE     ( ADD )
          DISTLIB         ( DLIB3    )
          FMID            ( DL1F001 )
          RMID            ( DL1F001 )
          LMOD            ( DL1LMOD  )
                          .
REP       MOD             ( MOD01    )
          LASTUPD         ( JXY1102  )
          LASTUPDTYPE     ( ADD )
          DISTLIB         ( AOS12    )
          FMID            ( JXY1102 )
          RMID            ( JXY1102 )
          CSECT           ( MOD01C1   MOD01C2   MOD01C3  )
          LMOD            ( LMOD01   )
                          .
REP       MOD             ( MOD02    )
          LASTUPD         ( JXY1102  )
          LASTUPDTYPE     ( ADD )
          DISTLIB         ( AOS12    )
          FMID            ( JXY1102 )
          RMID            ( JXY1102 )
          CSECT           ( MOD02C1 )
          LMOD            ( LMOD01    LMOD02   )
                          .
```

Figure 43. MOD Entry: Sample UNLOAD Output (No Cross-Zone Subentries) (Part 1 of 2)

```
REP       MOD             ( MOD03    )
          LASTUPD         ( JXY1121  )
          LASTUPDTYPE     ( UPD )
          DISTLIB         ( AOS12    )
          FMID            ( JXY1121 )
          RMID            ( JXY1121 )
          UMID            ( UZ00010   UZ00014  )
          LMOD            ( LMOD03   )
                          .
REP       MOD             ( MOD04    )
          LASTUPD         ( JXY1121  )
          LASTUPDTYPE     ( UPD )
          DISTLIB         ( AOS12    )
          ASSEMBLE
          FMID            ( JXY1121 )
          RMID            ( JXY1121 )
                            RMIDASM
          LMOD            ( MOD04   )
                          .
REP       MOD             ( MOD05    )
          LASTUPD         ( JXY0001  )
          LASTUPDTYPE     ( ADD )
          DISTLIB         ( DLIB1    )
          FMID            ( JXY0001 )
          RMID            ( JXY0001 )
                          .
ENDUCL.
```

Figure 43. MOD Entry: Sample UNLOAD Output (No Cross-Zone Subentries) (Part 2 of 2)

MOD Entry (Distribution and Target Zone)

```
UCLIN .
REP       MOD             ( CICSMOD1 )
          LASTUPD         ( HCI1703  )
          LASTUPDTYPE     ( ADD )
          DISTLIB         ( ARESLIB  )
          FMID            ( HCI1703 )
          RMID            ( HCI1703 )
          LMOD            ( CICSMOD1 )
          /* CROSS-ZONE*/   XZLMODP
          XZLMOD          (
                           ( LMOD01   ZOSZNA   )
                           ( LMOD01   ZOSZNB   )
                                              )
                          .
REP       MOD             ( CICSMOD2 )
          LASTUPD         ( HCI1703  )
          LASTUPDTYPE     ( ADD )
          DISTLIB         ( ARESLIB  )
          FMID            ( HCI1703 )
          RMID            ( HCI1703 )
          LMOD            ( CICSMOD2 )
          /* CROSS-ZONE*/   XZLMODP
          XZLMOD          (
                           ( LMOD01   ZOSZNA   )
                           ( LMOD01   ZOSZNB   )
                           ( LMODAA01 ZOSZNB   )
                                               )
                          .
REP       MOD             ( CICSMOD3 )
          LASTUPD         ( HCI1703  )
          LASTUPDTYPE     ( ADD )
          DISTLIB         ( ARESLIB  )
          FMID            ( HCI1703 )
          RMID            ( HCI1703 )
          LMOD            ( CICSLMD2 )
                          .
REP       MOD             ( CICSMOD4 )
          /* CROSS-ZONE*/   XZLMODP
          XZLMOD          (
                           ( LMOD01   ZOSZNA   )
                           ( LMOD01   ZOSZNB   )
                                              )
                          .
ENDUCL.
```

Figure 44. MOD Entry: Sample UNLOAD Output (Cross-Zone Subentries)

By specifying the FORFMID operand, you can reduce the number of MOD entries unloaded. When **FORFMID<** is specified, SMP/E unloads a MOD entry only if its FMID matches one of the FMIDs specified on the FORFMID operand. For example, to unload MOD entries whose FMIDs are either defined in FMIDSET TP or are JXY1102, you can use these commands:

```
SET      BDY(TGT1)          /* Set to target zone.      */.
UNLOAD   MOD                /* Unload all MOD entries   */
         FORFMID(TP         /* for the TP FMIDSET       */
                 JXY1102)   /* and FMID JXY1102.        */.
```

UCLIN Examples

You can use the ADD, REP, and DEL UCL statements to change subentries in the MOD entry. After the UCLIN changes are done, the MOD entry must contain at least the following subentries:

- DISTLIB

- FMID
- RMID

Otherwise, there is not enough information in the entry to process the module. If any of the required subentries are missing, SMP/E does not make the requested UCL updates to the entry, and the entry remains as it was before the UCL command.

The following examples are provided to help you use the MOD entry.

Example 1: Adding a New MOD Entry

To create a MOD entry, you should use one of the following methods rather than UCLIN:

- JCLIN, if a new module is being added to a new load module. For examples of how JCLIN creates MOD entries, see the *SMP/E Commands* manual.
- The LMOD operand on the ++MOD statement, if a new module is being added to an existing load module and no changes are needed in the link-edit control statements other than the INCLUDE for the new module. For an example of how to do this, see "++MOD MCS" on page 61.

You could make the same changes with the UCLIN command. However, you should make sure the changes are correct and complete. For example, assume you want to define two new modules, MOD99A and MOD99B. These are linked together to form load module LMOD99AB, which has an entry point of MOD99A and exists in LINKLIB. The FMID of both new modules is ZUSR001, a user-created function. You could use these commands to create the MOD and LMOD entries:

```
SET      BDY(TGT1)          /* Set to target zone.      */.
UCLIN                       /*                          */.
ADD      MOD(MOD99A)        /* Define new module entry. */
         DISTLIB(USRDLIB1)  /* Define DLIB.             */
         LMOD(LMOD99AB)     /* Load module.             */
         FMID(ZUSR001)      /* Functional owner.        */
                            /*                          */.
ADD      MOD(MOD99B)        /* Define new module entry. */
         DISTLIB(USRDLIB1)  /* Define DLIB.             */
         LMOD(LMOD99AB)     /* Load module.             */
         FMID(ZUSR001)      /* Functional owner.        */
                            /*                          */.
ADD      LMOD(LMOD99AB)     /* Now define LMOD.         */
         SYSLIB(LINKLIB)    /*                          */
         RENT REUS          /* Attributes.              */
++LMODIN                    /* Link statements.         */
  INCLUDE USRDLIB1(MOD99A,MOD99B)
  ENTRY MOD99A
++ENDLMODIN                 /*                          */
                            /*                          */.
ENDUCL                      /*                          */.
```

Example 2: Forcing Assembly of a Module

Assume you have a macro that is used by a source, and you want to make sure the source is always assembled when the macro is changed. You can do this by setting the ASSEMBLE indicator as follows:

```
SET      BDY(DLIB1)         /* Set to DLIB zone.        */.
UCLIN                       /*                          */.
ADD      MOD(SRC01)         /* MOD entry for source.    */
         ASSEMBLE           /* Always assemble it.      */
                            /*                          */.
ENDUCL                      /*                          */.
```

Example 3: Completing Cross-Zone Updates

If SMP/E could not complete cross-zone updates for APPLY or RESTORE processing, you may need to use UCLIN to make the remaining changes. (SMP/E issues messages and reports to tell you what cross-zone work you may need to finish.) Here are some examples of using UCLIN to change XZLMOD subentries in MOD entries. Make sure to check the messages and reports to determine whether any additional changes are needed for cross-zone subentries in LMOD entries or TARGETZONE entries.

- **Adding XZLMOD subentries:** This example adds LMOD IEANUC01 to the IGCXXX MOD entry in zone IMS1. If this MOD entry previously had no XZLMOD subentries, SMP/E automatically sets XZLMODP to indicate that the MOD entry now contains XZLMOD subentries.

```
SET BDY(IMS1)                /* set to IMS zone              */.
UCLIN                        /* start UCLIN processing       */.
ADD MOD(IGCXXX)              /* identify MOD entry           */
   XZLMOD((IEANUC01,ZOSZNA))  /* add load module from zone ZOSZNA */.
ENDUCL                       /* end UCLIN processing         */.
```

- **Replacing XZLMOD subentries:** This example replaces all the XZLMOD subentries in MOD entry ISPLINK with two XZLMOD subentries. If this MOD entry previously had no XZLMOD subentries, SMP/E automatically sets XZLMODP to indicate that the MOD entry now contains XZLMOD subentries.

```
SET BDY(ZOSZNA)                /* set to first zone.           */.
UCLIN                        /* start UCLIN processing       */.
REP MOD(ISPLINK)             /* identify MOD entry           */
    XZLMOD((CICSDIAG,CICS1)  /* replace list with two values  */
           (IMSDIAG1,IMS1))  /*                              */.
ENDUCL                       /* end UCLIN processing         */.
```

- **Deleting XZLMOD subentries:** This example deletes an XZLMOD subentry from the ISPLINK subentry. If this causes the XZLMOD subentry list to become empty, SMP/E automatically turns XZLMODP off to indicate that the MOD entry no longer contains XZLMOD subentries.

```
SET BDY(ZOSZNB)                /* set to second zone.          */.
UCLIN                        /* start UCLIN processing       */.
DEL MOD(ISPLINK)             /* identify MOD entry           */
    XZLMOD((IMSDIAG2,IMS1))  /* delete IMSDIAG2 reference    */.
ENDUCL                       /* end UCLIN processing         */.
```

MTSMAC Entry (SMPMTS)

The MTSMAC entry is a copy of a macro that resides only in a distribution library but is needed temporarily during APPLY processing. The MTSMAC entry is in the SMPMTS data set, which serves as a target macro library for such macros.

When SMP/E applies the SYSMODs that affect these macros, it calls utility programs to store the macros on the SMPMTS. This way, the most current service level of each macro is available for use in assemblies. After SMP/E has accepted all the SYSMODs that affect these macros, it deletes the associated MTSMAC entries from the SMPMTS.

Note: If you specify **SAVEMTS** in the OPTIONS entry that is in effect during ACCEPT processing, SMP/E will not delete MTSMAC entries from the SMPMTS after the SYSMODs that affect those macros have been successfully accepted.

Subentries

The MTSMAC entry contains no SMP/E data and appears to the system as a member of a normal macro library.

LIST Examples

You cannot use SMP/E to list the MTSMAC entries. However, you can use standard system utility programs (such as IEBGENER, IEBPTPCH, and IEHLIST) or products such as ISPF to display these entries or information about the data set.

UCLIN Examples

You can use the DEL UCL statement to delete an MTSMAC entry from the SMPMTS. This can be helpful if you plan to do an APPLY followed by ACCEPT when several target libraries have been created from the same distribution library.

When a SYSMOD is accepted into a distribution zone, the entries associated with it are automatically deleted from the SMPMTS for the RELATED target zone. However, even if the SYSMOD was also applied to other target zones created from the same distribution zone, SMP/E does not clean up the SMPMTS data sets for the other target zones.

To delete the entries from these data sets, you can accept the SYSMOD and name these other target zones as the RELATED zone. However, this would update the distribution library each time; this is time-consuming and could use up space in the distribution library data set.

Instead, you can use the DEL command to delete these entries without updating the distribution library. To determine which entries to specify, check the SMPLOG data set to see which ones SMP/E deleted during ACCEPT processing.

Note: You can also use the CLEANUP command to delete MTSMAC entries without specifying them individually. For more information on the CLEANUP command, see the *SMP/E Commands* manual.

Example: Deleting an MTSMAC Entry

Assume that you have two target zones, TGT1 and TGT2, generated off the same distribution zone, DLB1. During ACCEPT processing of a SYSMOD, SMP/E has deleted MTSMAC MAC01 and MAC02 from the SMPMTS data set associated with target zone TGT2. After performing the ACCEPT, you want to delete the same

macro from the SMPMTS associated with target zone TGT1. Assume either that you have a cataloged procedure for TGT1 with the correct SMPMTS specified, or that you have set up the correct DDDEF entries. The following UCLIN can be used to delete the MTSMAC entry:

```
SET      BDY(TGT1)          /* Set to TGT zone.         */.
UCLIN                       /*                          */.
DEL      MTSMAC(MAC01)      /* Delete the macro.        */.
DEL      MTSMAC(MAC02)      /* Delete the macro.        */.
ENDUCL                      /*                          */.
```

Note: One UCL statement is required for each MTSMAC entry to be deleted.

You can make the same changes by use of system utilities. However, the SMPLOG will not reflect the processing done.

OPTIONS Entry (Global Zone)

The OPTIONS entry defines processing options that are to be used for an SMP/E command or set of commands. Although OPTIONS entries exist only in the global zone, they are also used to process commands for target and distribution zones. There are two ways you can specify that OPTIONS entry that should be in effect when you are processing a zone:

- In the GLOBALZONE, TARGETZONE, and DLIBZONE entries. The OPTIONS entry specified here is the default OPTIONS entry for that zone.
- On the SET command. The name specified on the SET command overrides the default OPTIONS name.

When SMP/E processes a command, it checks these sources to determine which OPTIONS entry should be in effect for that command. If SMP/E cannot find a reference to an OPTIONS entry, it will use defaults for some of the subentries. The following section describes these defaults, as well as the other values you can specify for each subentry.

Subentries

These are the subentries for the OPTIONS entry as they appear in the LIST output:

name
is the name of the OPTIONS entry.

The name can contain from 1 to 8 alphanumeric characters.

AMS
is the name of the UTILITY entry that SMP/E is to use to obtain information when calling the access method services (AMS) utility.

The UCL operand is **AMS(***name***)**.

- The name can contain from 1 to 8 alphanumeric characters.
- If no entry name is specified, SMP/E uses a default UTILITY entry. For details, see Table 7 on page 318.

ASM
is the name of the UTILITY entry that SMP/E is to use to obtain information when calling the assembler utility.

The UCL operand is **ASM(***name***)**.

- The name can contain from 1 to 8 alphanumeric characters.
- If no entry name is specified, SMP/E uses a default UTILITY entry. For details, see Table 7 on page 318.

CHANGEFILE
specifies whether library change file records should be generated and written to the SMPDATA1 and SMPDATA2 data sets during APPLY and RESTORE command processing.

The UCL operand is **CHANGEFILE(YES|NO)**, where:

YES
indicates that library change file records should be generated during APPLY or RESTORE processing.

NO
indicates that library change file records should **not** be generated during APPLY or RESTORE processing. This is the default for APPLY and RESTORE processing.

COMP
is the name of the UTILITY entry that SMP/E is to use to obtain information when calling the utility program to compress data sets.

The UCL operand is **COMP(***name***)**.

- The name can contain from 1 to 8 alphanumeric characters.
- If no entry name is specified, SMP/E uses a default UTILITY entry. For details, see Table 7 on page 318.

COMPACT
specifies whether inline element data within SYSMODs in the SMPPTS data set should be compacted. The element data is normally compacted during the GZONEMERGE and RECEIVE commands.

The UCL operand is **COMPACT(YES|NO)**, where:

YES
indicates inline element data within SYSMODs in the SMPPTS should be compacted to reduce the space requirements of the SMPPTS during the GZONEMERGE and RECEIVE commands. The element data is expanded as needed during ACCEPT and APPLY command processing. YES is the default.

NO
indicates inline element data within SYSMODs in the SMPPTS should not be compacted during the GZONEMERGE and RECEIVE commands. The element data will reside in the SMPPTS data set in its original form.

COPY
is the name of the UTILITY entry that SMP/E is to use to obtain information when calling the copy utility.

The UCL operand is **COPY(***name***)**.

- The name can contain from 1 to 8 alphanumeric characters.
- If no entry name is specified, SMP/E uses a default UTILITY entry. For details, see Table 7 on page 318.

DSPREFIX
specifies the data set prefix to be used to construct the full data set name when SMPTLIB data sets are being allocated for RELFILEs. For more information about names for SMPTLIB data sets, see *SMP/E Commands*.

The UCL operand is **DSPREFIX(***prefix***)**.

- The prefix can contain from 1 to 26 alphanumeric characters.
- The prefix must follow standard naming conventions for data sets.
- If a DDDEF entry is in effect for the SMPTLIB data sets, the DSPREFIX value in that DDDEF entry overrides the DSPREFIX value specified in the OPTIONS entry in effect.
- If no DSPREFIX value is specified in either the OPTIONS entry or the DDDEF entry, no high-level qualifier is assigned to the SMPTLIB data sets.
- If the DSPREFIX value is the same as the RFDSNPFX value for the RELFILE data sets that are being processed, the SMPTLIB data sets cannot be allocated in either of these cases:
  - The RELFILE data sets are on DASD.
  - The RELFILE data sets are on tape and are cataloged.

DSSPACE
specifies the primary and secondary space allocation (in tracks) and the number

of directory blocks to be allocated for each SMPTLIB data set. After the data set is loaded, unused space is freed. For more information about SMPTLIB data sets, see *SMP/E Commands*.

The UCL operand is **DSSPACE(***prime*, *secondary*, *directory***)**.

- Each value can contain from 1 to 4 numeric characters.
- If a DDDEF entry is in effect for the SMPTLIB data sets, the SPACE and DIR values in that DDDEF entry override the DSSPACE values specified in the OPTIONS entry in effect.
- These values should be specified in the appropriate OPTIONS or DDDEF entries before you receive a relative file. Otherwise, SMP/E cannot allocate any new SMPTLIB data sets.

EXRTYDD

specifies the list of ddnames that are not eligible for retry processing after an *x*37 abend. EXRTYDD is used with RETRYDDN in order to exclude a subset of libraries from retry processing.

The UCL operand is **EXRTYDD(***ddname*...**)**.

- The ddnames can contain from 1 to 8 alphanumeric characters.
- If a ddname is specified in both the EXRTYDD list and the RETRYDDN list, the ddname is excluded from retry processing.
- If no ddnames are specified for RETRYDDN, no retry processing will be done for any libraries. The ddnames specified on EXRTYDD are ignored.
- If **ALL** is specified on EXRTYDD, it is treated as just another ddname; it does **not** exclude all ddnames from retry processing. To exclude all libraries from retry processing, do **one** of the following instead:
  - Specify **RETRY(NO)** on the SMP/E command being processed.
  - Do not specify a RETRYDDN list in the OPTIONS entry that is in effect for the SMP/E command being processed.
  - Do not have an OPTIONS entry in effect for the SMP/E command being processed.

HFSCOPY

is the name of the UTILITY entry that SMP/E is to use to obtain information when calling the hierarchical file system (HFS) copy utility.

This is the utility used to install hierarchical file system elements and must meet the same program-to-program interface as BPXCOPY.

The UCL operand is **HFSCOPY(***name***)**.

- The name can contain from 1 to 8 uppercase alphanumeric characters.
- If no HFSCOPY subentry is specified in the OPTIONS entry, SMP/E uses a default UTILITY entry. For details, see Table 7 on page 318.

IOSUP

is the name of the UTILITY entry that SMP/E is to use to obtain information when calling the IEHIOSUP utility program to process maintenance for an OS/VS1 system.

The UCL operand is **IOSUP(***name***)**.

- The name can contain from 1 to 8 alphanumeric characters.

LKED

is the name of the UTILITY entry that SMP/E is to use to obtain information when calling the link-edit utility.

The UCL operand is **LKED(***name***)**.

- The name can contain from 1 to 8 alphanumeric characters.
- If no entry name is specified, SMP/E uses a default UTILITY entry. For details, see Table 7 on page 318.

MSGWIDTH
specifies whether the message output (SMPOUT only) should be formatted in 80 or 120 character widths.

The UCL operand is **MSGWIDTH(***value***)**. The subentry can contain one of the following values:

80 indicates that the message text should be formatted to an 80 character width.

120 indicates that the message text should be formatted to a 120 character width. This is the default.

MSGFILTER
specifies whether messages issued to SMPOUT during APPLY, ACCEPT, and RESTORE processing should be filtered to contain only the following:

- Messages with a severity of Warning or higher.
- Messages with a severity of Informational that add clarity or additional information to a previously issued higher severity message.
- Messages GIM20501I and GIM20502I.

The UCL operand is **MSGFILTER(YES|NO)**, where:

YES indicates that the number of messages issued to SMPOUT should be in a filtered format for APPLY, ACCEPT, and RESTORE processing.

NO indicates that the number of messages issued to SMPOUT should be in a unfiltered format for APPLY, ACCEPT, and RESTORE processing. This is the default.

NOPURGE
indicates that after SMP/E accepts SYSMODs, it should not delete the associated global zone SYSMOD entries, HOLDDATA entries, SMPPTS MCS entries, or SMPTLIB data sets.

The UCL operand is **NOPURGE**.

- The default is for **NOPURGE** not to be specified. In this case, SMP/E deletes the entries after the SYSMOD has been successfully accepted. (This is true only if the SYSMOD has been applied and **BYPASS(APPLYCHECK)** was not specified on the ACCEPT command.)
- Although this operand can be specified in any OPTIONS entry, it is effective only when the OPTIONS entry is used during ACCEPT processing.

NOREJECT
specifies that the global zone SYSMOD entry and the associated MCS entry should not be deleted after the SYSMOD is restored.

The UCL operand is **NOREJECT**.

- The default is for **NOREJECT** not to be specified. In this case, SMP/E deletes the entries after the SYSMOD has been successfully restored.
- Although this operand can be specified in any OPTIONS entry, it is effective only when the OPTIONS entry is used during RESTORE processing.

PAGELEN
specifies the page length for the SMPOUT, SMPRPT, and SMPLIST data sets.

The UCL operand is **PAGELEN(***nnnn***)**.
- The value can contain from 1 to 4 numeric characters.
- If no value is specified, the default is 60.

PEMAX
specifies the maximum number of subentries that can be present in any CSI entry. Most often, the largest entry is a SYSMOD entry.

The UCL operand is **PEMAX(***nnnn***)**.
- The value can contain from 1 to 4 numeric characters, with a value range of 1 to 9999.
- If no value is specified, the default is 25000. Therefore, if you want a value higher than 9999, you must use the default.

RECEXZGRP
specifies a list of zones or zonesets to be excluded during APPLYCHECK and ACCEPTCHECK processing during the SYSMOD selection phase of RECEIVE processing.

The UCL operand is **RECEXZGRP(***value*...**)**.
- Each *value* is a zone or zoneset name. Each name can contain from 1 to 8 alphanumeric characters.
- The zone or zonesets can contain both target and distribution zones.

  Note: The value specified cannot be GLOBAL nor ALLZONES.
- If a zone is specified in both the RECEXZGRP list and the RECZGRP list, the zone is excluded from processing.
- If no zones are specified for RECZGRP, the zones specified on RECEXZGRP are ignored.

RECZGRP
specifies a list of zones and zonesets eligible for APPLYCHECK and ACCEPTCHECK processing during the SYSMOD selection phase of RECEIVE processing. Any SYSMOD that has been applied or accepted into any of the zones specified by this list will not be received by the RECEIVE command, unless the SYSMOD is specified on the SELECT operand of the RECEIVE command or the list is overridden by the BYPASS(ACCEPTCHECK) or BYPASS(APPLYCHECK) operands, or a new list is specified by the ZONEGROUP operand.

The UCL operand is **RECZGRP(***value*...**)**.
- Each *value* is a zone or zoneset name. Each name can contain from 1 to 8 alphanumeric characters.
- The zone or zonesets can contain both target and distribution zones.

  Note: The value specified cannot be GLOBAL.
- ALLZONES can be specified to indicate that all zones defined by a ZONEINDEX subentry in the GLOBALZONE entry are eligible. When ALLZONES is specified, all other values specified are ignored.
- If no zones or zonesets are specified, no APPLYCHECK or ACCEPTCHECK processing is performed unless the ZONEGROUP operand is specified on the RECEIVE command.

RETRY
is the name of the UTILITY entry that SMP/E is to use to obtain information when calling the utility program to compress a data set after an *x*37 abend.

The UCL operand is **RETRY(***name***)**.

- The name can contain from 1 to 8 alphanumeric characters.
- If no entry name is specified, SMP/E uses a default UTILITY entry. For details, see Table 7 on page 318.

RETRYDDN
specifies the list of ddnames eligible for retry processing after an *x*37 abend.

The UCL operand is **RETRYDDN(***ddname*...**)**.

- The ddnames can contain from 1 to 8 alphanumeric characters.
- **ALL** can be specified to indicate that all ddnames are eligible.
- If no ddnames are specified, no retry processing will be done, even if **RETRY** was specified on the command being processed.
- Retry processing is attempted for partitioned data sets (PDSs) and partitioned data sets extended (PDSEs) that experience an *x*37 abend, indicating that they have run out of space.
- For pointers on how to set up the desired retry processing, see *SMP/E User's Guide*.

SAVEMTS
indicates that MTSMAC entries should not be deleted from the SMPMTS after the SYSMODs that affect those macros have been successfully accepted.

The UCL operand is **SAVEMTS**.

- If SAVEMTS is not specified, SMP/E deletes the entries after all the SYSMODs that affect the macros have been successfully accepted. (This is true only if the SYSMOD has been applied and **BYPASS(APPLYCHECK)** was not specified on the ACCEPT command.)
- Although this operand can be specified in any OPTIONS entry, it is effective only when the OPTIONS entry is used during ACCEPT processing.

SAVESTS
indicates that STSSRC entries should not be deleted from the SMPSTS after the SYSMODs that affect the source have been successfully accepted.

The UCL operand is **SAVESTS**.

- If SAVESTS is not specified, SMP/E deletes the entries after all the SYSMODs that affect the source have been successfully accepted. (This is true only if the SYSMOD has been applied and **BYPASS(APPLYCHECK)** was not specified on the ACCEPT command.)
- Although this operand can be specified in any OPTIONS entry, it is effective only when the OPTIONS entry is used during ACCEPT processing.

SUPPHOLD
specifies a list of HOLD reason ids for which the HOLDDATA card image should not be displayed on either the Unresolved HOLD Reason Report or Bypassed HOLD Reason Report.

The UCL operand is **SUPPHOLD(***value*...**)**, where:

value is a HOLD reason id, which is from 1 to 7 alphanumeric characters, #, @, and $. The first character cannot start with 0-9.

UPDATE
is the name of the UTILITY entry that SMP/E is to use to obtain information when calling the update utility.

The UCL operand is **UPDATE(***name***)**.

- The name can contain from 1 to 8 alphanumeric characters.

- If no entry name is specified, SMP/E uses a default UTILITY entry. For details, see Table 7 on page 318.

ZAP
specifies the name of the UTILITY entry that SMP/E is to use to obtain information when calling the superzap utility.

The UCL operand is **ZAP(***name***)**.

- The name can contain from 1 to 8 alphanumeric characters.
- If no entry name is specified, SMP/E uses a default UTILITY entry with NAME(IMASPZAP), RC(4), PRINT(SYSPRINT), and PARM().

LIST Examples

To list all the OPTIONS entries in a global zone, you can use the following commands:

```
SET      BDY(GLOBAL)        /* Set to requested zone.     */.
LIST     OPTIONS            /* List all OPTIONS entries.  */.
```

To list specific OPTIONS entries in a global zone, you can use these commands:

```
SET      BDY(GLOBAL)        /* Set to requested zone.   */.
LIST     OPTIONS(OPT1,      /* List only these three    */
                TGT1,      /* entries.                 */
                 DLIB1)     /*                          */.
```

The format of the LIST output for each OPTIONS entry is the same for both of these commands. The only difference is the number of OPTIONS entries listed.

Figure 45 on page 272 is an example of LIST output for OPTIONS entries.

OPTIONS Entry (Global Zone)

```
PAGE nnnn  - NOW SET TO zzzzzz ZONE nnnnnnn  DATE mm/dd/yy TIME hh:mm:ss SMP/E 31.nn SMPLIST OUTPUT

GLOBAL        OPTIONS ENTRIES


  NAME

FULLOPT   AMS             = MYAMS
          ASM             = MYASM
          COMP            = MYCOMP
          COPY            = MYCOPY
          HFSCOPY         = MYHCOPY
          IOSUP           = MYIOSUP
          LKED            = MYLKED
          RETRY           = MYRETRY
          UPDATE          = MYUPDAT
          ZAP             = MYZAP
          NUCID           = 8          (NUCID NO LONGER SUPPORTED)
          PAGELEN         = 100
          PEMAX           = 5000
          NOPURGE
          COMPACT SMPPTS  = YES
          NOREJECT
          SAVEMTS
          SAVESTS
          DSSPACE         = PRI=0300  SEC=0050  DIR=0025
          MSGFILTER       = YES
          MSGWIDTH        = 80
          CHANGEFILE      = YES
          DSPREFIX        = SMP.RELFILE.M9801
          RETRYDDN        = ALL
          EXRTYDD         = LINKLIB   MIGLIB    NUCLEUS
          RECZGRP         = ALLZONES
          SUPPHOLD        = DOC      MSGSKEL

OPT1      ASM             = IEUASM
          HFSCOPY         = BPXCOPY
          LKED            = IEWL
          RETRY           = USERRCVR
          PAGELEN         = 120
          NOREJECT
          DSSPACE         = PRI=300  SEC=50    DIR=25
          DSPREFIX        = SMP.RELFILE.M9801
          RETRYDDN        = ALL
          EXRTYDD         = LINKLIB   MIGLIB    NUCLEUS
          SUPPHOLD        = DOC      MSGSKEL
```

Figure 45. OPTIONS Entry: Sample LIST Output

UCLIN Examples

You can use the ADD, REP, and DEL UCL statements to change subentries in an OPTIONS entry. When you use UCLIN to update an OPTIONS entry, remember that if a DEL statement deletes all the existing subentries in the entry, SMP/E deletes the entire entry.

The following examples are provided to help you use the OPTIONS entry.

Example 1: Connecting an OPTIONS Entry to UTILITY Entries

Assume that you have set up three UTILITY entries: IEUASM, IEWL, and MYX37. For examples of setting up these entries, see “UTILITY Entry (Global Zone)” on page 318

page 318. Now you wish to define an OPTIONS entry, OPT1, that will be used during APPLY processing. The following UCL can be used to set up that entry:

```
SET      BDY(GLOBAL)        /* Set to global zone.        */.
UCLIN                       /*                            */.
ADD      OPTIONS(OPT1)      /* New OPTIONS entry.         */
         ASM(IEUASM)        /* Connect to assembler data. */
         LKED(IEWL)         /* Connect to link data.      */
         RETRY(MYX37)       /* Connect to retry.          */
                            /*                            */.
ENDUCL                      /*                            */.
```

To use the OPTIONS entry, you need either to define it as the default OPTIONS entry for the desired GLOBALZONE, DLIBZONE, or TARGETZONE entry, or to specify it on the OPTIONS operand of the SET command for the zone you want to process with these values.

Example 2: Changing the SMPOUT Page Length

Assume that you wish to modify the OPTIONS entry created in “Example 1: Connecting an OPTIONS Entry to UTILITY Entries” on page 272 to indicate that your printer now prints 120 lines per page. The following UCL will do this:

```
SET      BDY(GLOBAL)        /* Set to global zone.      */.
UCLIN                       /*                          */.
ADD      OPTIONS(OPT1)      /* Add because page length is
                               not there yet.           */
         PAGELEN(120)       /* Change page length.      */
                            /*                          */.
ENDUCL                      /*                          */.
```

Example 3: Preparing to Receive RELFILEs

To receive a new function packaged in RELFILE format, you have to define the amount of space to allocate the SMPTLIB data sets and, optionally, the prefix to be used in building the data set names. Assume that the program directory indicates that 300 tracks of primary space should be used, 50 tracks of secondary space, and 25 directory blocks, and that you want the data set names to start with SMP.RELFILE.M9801. The following UCL can be used to add this information to the OPTIONS entry created in “Example 1: Connecting an OPTIONS Entry to UTILITY Entries” on page 272:

```
SET      BDY(GLOBAL)                /* Set to global zone. */.
UCLIN                               /*                     */.
ADD      OPTIONS(OPT1)              /* Add because data is
                                       not there yet.      */
         DSSPACE(300,50,25)         /* Space allocation.   */
         DSPREFIX(SMP.RELFILE.M9801) /* Prefix.            */
                                    /*                     */.
ENDUCL                              /*                     */.
```

Example 4: Identifying Libraries for Retry Processing

During processing of commands that update product libraries (such as ACCEPT, APPLY, RESTORE, and LINK), utilities called by SMP/E may issue *x*37 abends when the libraries they are updating run out of space. SMP/E can attempt to recover from such out-of-space errors if **RETRY(YES)** was specified on the command being processed **and** if a RETRYDDN list is available in the OPTIONS entry that is in effect.

Assume that you want SMP/E to attempt this retry processing for all libraries **except** LINKLIB, MIGLIB, and NUCLEUS. The following UCL can be used to specify the desired ddnames in the OPTIONS entry created in “Example 1: Connecting an OPTIONS Entry to UTILITY Entries” on page 272:

OPTIONS Entry (Global Zone)

```
SET      BDY(GLOBAL)                /* Set to global zone. */.
UCLIN                               /*                     */.
ADD      OPTIONS(OPT1)              /* Add because data is
                                       not there yet.      */
         RETRYDDN(ALL)              /* Retry all ddnames   */
         EXRTYDD(LINKLIB,MIGLIB,NUCLEUS) /* except these.   */
                                    /*                     */.
ENDUCL                              /*                     */.
```

PRODUCT Entry (Global Zone)

The PRODUCT entry describes a software product. A product is known to SMP/E by the combination of its *prodid* and the *vv.rr.mm* values. PRODUCT entries reside only in the global zone.

Subentries

prodid
: specifies the product identifier for the product described in the PRODUCT entry. For IBM products, it is recommended that the *prodid* be the IBM program product number (for example, “5647-A01”).

vv.rr.mm
: specifies the version, release and modification level for the product described in the PRODUCT entry.

DESCRIPTION
: describes the product.

The UCL operand is **DESCRIPTION(***description***)**.

SREL
: specifies the system or subsystem releases on which the PRODUCT can be installed. There can be multiple SREL subentries associated with a PRODUCT.

The UCL operand is **SREL(***srel,...***)**.

PRODSUP
: specifies the PRODUCTs that are superseded by this PRODUCT. Multiple PRODSUP subentries can be associated with a PRODUCT. The combination of *prodid* and *vv.rr.mm* determines the uniqueness of a subentry in the PRODSUP subentry list. Only one subentry value for a given *prodid* and *vv.rr.mm* combination is saved in the PRODSUP subentry list.

The UCL operand is **PRODSUP((***prodid,vv.rr.mm***),...)**.

URL
: specifies the URL that can be accessed to obtain additional information about the product.

The UCL operand is **URL(***product_url***)**.

VENDOR
: specifies the name of the vendor supplying the product.

The UCL operand is **VENDOR(***vendor_name***)**.

RECDATE
: specifies the date on which the PRODUCT was received.

There is no UCL support for this subentry.

RECTIME
: specifies the time at which the PRODUCT was received.

There is no UCL support for this subentry.

UCLDATE
: specifies the date on which the PRODUCT was last processed using the UCLIN command.

There is no UCL support for this subentry.

PRODUCT Entry (Global Zone)

UCLTIME
specifies the time at which the PRODUCT was last processed using the UCLIN command.

There is no UCL support for this subentry.

REWORK
identifies the level of this PRODUCT, which was received again for minor changes.

There is no UCL support for this subentry.

LIST Examples

To list all the PRODUCT entries in a particular zone, you can use the following commands:

```
SET      BDY(GLOBAL)        /* Set to global zone.      */.
LIST     PRODUCT            /* List all PRODUCT entries.*/.
```

To list specific PRODUCT entries, you can use these commands:

```
SET      BDY(GLOBAL)        /* Set to global zone.      */.
LIST     PRODUCT(5647-A01)  /* List all PRODUCT entries */
                            /* with prodid of 5647-A01  */.
LIST     PRODUCT((5645-001,01.03.00))
                            /* List PRODUCT entry with  */
                            /* prodid of 5645-001       */
                            /* and VRM of 01.03.00      */.
LIST     PRODUCT(5668-949,(5645-001,1.2.0))
                            /* List all PRODUCT entries */
                            /* with prodid of 5668-949, */
                            /* plus PRODUCT entry with  */
                            /* prodid of 5645-001       */
                            /* and VRM of 01.02.00      */.
```

The format of the LIST output for each PRODUCT entry is the same for all of these commands. The only difference is the number of PRODUCT entries listed. Figure 46 shows an example of LIST output for PRODUCT entries. PRODUCT entries are listed alphanumerically by *prodid*. PRODUCT entries with the same *prodid* value are further sorted by *vv.rr.mm*.

```
PAGE nnnn  - NOW SET TO zzzzzz ZONE nnnnnnn  DATE mm/dd/yy TIME hh:mm:ss SMP/E 31.nn SMPLIST OUTPUT

GLOBAL  PRODUCT  ENTRIES


  NAME

5647-A01  VRM             = 02.09.00
          DESCRIPTION     = OS/390
          REWORK          = 1999215
          URL             = http://www.s390.ibm.com/os390/
          DATE/TIME REC   = 01.267  12:55:39
                    UCL   = 02.331  02:25:45
          VENDOR          = IBM
          PRODSUP         = 5645-001  02.07.00  5668-949  01.08.00
          SREL            = Z038
```

Figure 46. PRODUCT Entry: Sample LIST Output

Notes:

1. The entry name value for the PRODUCT entries formatted to the left of the subentry names is the prodid value.

2. If the URL value extends past column 120, it is continued on the next line.
3. The display for each PRODSUP subentry occupies two columns. The first column is the *prodid* and the second column is the *vv.rr.mm*. Four subentries can fit on a row.

UCLIN Examples

You can use the ADD, REP, and DEL UCL statements to change subentries in the PRODUCT entry. When you use UCLIN to update a PRODUCT entry, keep in mind that after the UCLIN changes are made, the PRODUCT entry must contain at least the DESCRIPTION and SREL subentries.

Example: Adding a PRODUCT Entry

Assume you have a product, SAMPLE V1R2, for which you wish to create a description and put in an entry named “1234-567,1.2.0”. You could set up a PRODUCT entry as follows:

```
SET BDY(GLOBAL)                    /* Set to global zone       */.
UCLIN                              /* Start UCLIN processing   */.
  ADD PRODUCT(1234-567,1.2.0)      /* Identify the product     */
      DESCRIPTION(SAMPLE)          /* - Name                   */
      VENDOR(IBM)                  /* - Vendor                 */
      PRODSUP((1234-456,01.04.00)) /* - Product sups           */
      SREL(Z038)                   /* - SREL                   */
      URL(http://www.ibm.com/)     /* URL                      */.
ENDUCL                             /* End UCLIN processing     */.
```

PROGRAM Entry (Distribution and Target Zone)

The PROGRAM entry describes a program element (a pre-built load module or a program object). Program elements may exist in distribution or target libraries. A PROGRAM entry is created the first time you install a SYSMOD that contains a ++PROGRAM MCS for a program element that does not yet have a PROGRAM entry.

SMP/E records the function and service level of the program element in the entry. Once a PROGRAM entry exists, it is updated as subsequent SYSMODs that affect the program element are installed.

Subentries

These are the subentries for the PROGRAM entry as they appear in the LIST output:

name
is the name of the program element represented by the entry. It can contain from 1 to 8 alphanumeric characters and $, #, @, or hex C0.

ALIAS
specifies a list of alias names for the element.

The UCL operand is **ALIAS(***name...***)**.

Each alias name can contain from 1 to 8 alphanumeric characters.

DISTLIB
specifies the ddname of the distribution library for the program element.

The UCL operand is **DISTLIB(***ddname***)**.

- The ddname can contain from 1 to 8 alphanumeric characters.
- The DISTLIB subentry is required. Without it, SMP/E cannot process any changes for the program element.

FMID
specifies the functional owner of this program element. The functional owner is the last function SYSMOD that replaced this element.

The UCL operand is **FMID(***sysmod_id***)**.

The SYSMOD ID must contain 7 alphanumeric characters.

LASTUPD
identifies the cause of the last change to this PROGRAM entry.

The UCL operand is **LASTUPD(***value***)**. This subentry can contain one of the following values:

UCLIN
indicates that the change was made as a result of UCLIN processing.

sysmod_id
indicates that the change was made during the installation of the indicated SYSMOD.

The SYSMOD ID must contain 7 alphanumeric characters.

LASTUPD TYPE
indicates how the entry was last changed.

The UCL operand is **LASTUPDTYPE(***value***)**. This subentry may contain one of the following values:

ADD The entry was added.
UPD The entry was updated.

RMID
identifies the last SYSMOD that **replaced** this program element. Any subsequent SYSMOD that modifies this program element must have a defined relationship (such as PRE or SUP) with this SYSMOD.

The UCL operand is **RMID(***sysmod_id***)**.

- The SYSMOD ID must contain 7 alphanumeric characters.
- If **RMID** is not specified but **FMID** is, SMP/E sets the RMID value to the specified FMID.

SYSLIB
specifies the ddname of the target library for the program element.

The UCL operand is **SYSLIB(***ddname***)**.

- You can specify only one SYSLIB value.
- The ddname can contain from 1 to 8 alphanumeric characters.

LIST Examples

To list all the PROGRAM entries in a particular zone, you can use the following commands:

```
SET      BDY(TGT1)          /* Set to requested zone.   */.
LIST     PROGRAM            /* List all PROGRAM entries.*/.
```

To list specific PROGRAM entries, you can use these commands:

```
SET      BDY(TGT1)          /* Set to requested zone.   */.
LIST     PROGRAM(PGM1       /* List only these two      */
             PGM2)          /* entries.                 */.
```

The format of the LIST output for each PROGRAM entry is the same for both of these commands. The only difference is the number of PROGRAM entries listed. Figure 47 is an example of LIST output for PROGRAM entries.

```
PAGE nnnn  - NOW SET TO zzzzzz ZONE nnnnnnn  DATE mm/dd/yy TIME hh:mm:ss SMP/E 31.nn SMPLIST OUTPUT

TGT1          PROGRAM ENTRIES


  NAME

PGM1      LASTUPD         = MYPROG1 TYPE=ADD
          LIBRARIES       = DISTLIB=ADSTLIB   SYSLIB=SPGMLIB
          FMID            = MYPROG1
          RMID            = MYPROG1

PGM2      LASTUPD         = PGMPTF1 TYPE=ADD
          LIBRARIES       = DISTLIB=ADSTLIB   SYSLIB=SPGMLIB
          FMID            = MYPROG1
          RMID            = PGMPTF1
```

Figure 47. PROGRAM Entry: Sample LIST Output

By specifying the FORFMID operand, you can reduce the number of PROGRAM entries listed. When FORFMID is specified, SMP/E lists a PROGRAM entry only if its FMID matches one of the FMIDs specified on the FORFMID operand. For example, to list PROGRAM entries whose FMIDs are defined in FMIDSET ABC or else are MYPROG1, you can use these commands:

PROGRAM Entry (Distribution and Target Zone)

```
SET      BDY(TGT1)          /* Set to target zone.      */.
LIST     PROGRAM            /* List all PROGRAM entries */
         FORFMID(ABC        /* for the ABC FMIDSET      */
                 MYPROG1)   /* and FMID MYPROG1.        */.
```

You can use the LIST command to find out the names of all SYSMODs that have modified program elements. To include the names of these SYSMODs in the LIST output, you can use the XREF operand, as shown in these commands:

```
SET      BDY(TGT1)          /* Set to requested zone.   */.
LIST     PROGRAM            /* List all PROGRAM entries */
         XREF               /* and related SYSMODs.     */.
```

Notes:

1. You can use XREF in either mass mode or select mode.
2. SMP/E obtains the data included for the XREF operand by checking for entries for this program element in all the SYSMOD entries. Because this data is not contained in the PROGRAM entry itself, you cannot use UCLIN to change it in the PROGRAM entry.

Figure 48 is an example of the LIST output produced when the XREF operand is used.

```
PAGE nnnn  - NOW SET TO zzzzzz ZONE nnnnnnn  DATE mm/dd/yy TIME hh:mm:ss SMP/E 31.nn SMPLIST OUTPUT

TGT1          PROGRAM ENTRIES


  NAME

PGM1      LASTUPD         = MYPROG1 TYPE=ADD
          LIBRARIES       = DISTLIB=ADSTLIB   SYSLIB=SPGMLIB
          FMID            = MYPROG1
          RMID            = MYPROG1
          SYSMOD HISTORY  = SYSMOD   TYPE      DATE   MCS     --STATUS--
                            MYPROG1  FUNCTION 01.100  PROGRAM   APP    ACC

PGM2      LASTUPD         = PGMPTF1 TYPE=ADD
          LIBRARIES       = DISTLIB=ADSTLIB   SYSLIB=SPGMLIB
          FMID            = MYPROG1
          RMID            = PGMPTF1
          SYSMOD HISTORY  = SYSMOD   TYPE      DATE   MCS     --STATUS--
                            PGMPTF1  PTF      01.150  PROGRAM   APP    ACC
```

Figure 48. PROGRAM Entry: Sample LIST Output When XREF Is Specified

UNLOAD Examples

To dump the PROGRAM entries in UCL format, you can use the UNLOAD command. To unload all the PROGRAM entries in a particular zone, you can use the following commands:

```
SET      BDY(TGT1)          /* Set to requested zone.     */.
UNLOAD   PROGRAM            /* Unload all PROGRAM entries.*/.
```

To unload specific PROGRAM entries, you can use these commands:

```
SET      BDY(TGT1)          /* Set to requested zone.     */.
UNLOAD   PROGRAM(PGM1       /* Unload only these two      */
            PGM2)           /* entries.                   */.
```

The format of the UNLOAD output for each PROGRAM entry is the same for both of these commands. The only difference is the number of PROGRAM entries listed. Figure 49 is an example of UNLOAD output for PROGRAM entries.

```
UCLIN .
REP       PROGRAM         ( PGM1     )
          LASTUPD         ( MYPROG1  )
          LASTUPDTYPE     ( ADD )
          DISTLIB         ( ADSTLIB  )
          SYSLIB          ( SPGMLIB  )
          FMID            ( MYPROG1 )
          RMID            ( MYPROG1 )
                          .
REP       PROGRAM         ( PGM2     )
          LASTUPD         ( PGMPTF1  )
          LASTUPDTYPE     ( ADD )
          DISTLIB         ( ADSTLIB  )
          SYSLIB          ( SPGMLIB  )
          FMID            ( MYPROG1 )
          RMID            ( PGMPTF1 )
                          .
ENDUCL.
```

Figure 49. PROGRAM Entry: Sample UNLOAD Output

By specifying the FORFMID operand, you can reduce the number of PROGRAM entries unloaded. When FORFMID is specified, SMP/E unloads a PROGRAM entry only if its FMID matches one of the FMIDs specified on the FORFMID operand. For example, to unload PROGRAM entries whose FMIDs are either defined in FMIDSET ABC or are MYPROG1, you can use these commands:

```
SET      BDY(TGT1)          /* Set to target zone.        */.
UNLOAD   PROGRAM            /* Unload all PROGRAM entries */
         FORFMID(ABC        /* for the ABC FMIDSET        */
                 MYPROG1)   /* and FMID MYPROG1.          */.
```

UCLIN Examples

You can use the ADD, REP, and DEL UCL statements to change subentries in the PROGRAM entry. After the UCLIN changes are made, the PROGRAM entry must contain at least the following subentries:

- DISTLIB
- FMID
- RMID

Otherwise, there is not enough information in the entry to process the program element. If any of these subentries are missing, SMP/E does not make the requested UCL updates to the entry, and the entry remains as it was before the UCL command.

Example: Adding a New PROGRAM Entry

Assume you have installed PGM3 outside of SMP/E, but now you want to start using SMP/E to track changes to that program element. Here is an example of the UCL statements you would use to define entries for that program element in the appropriate target and distribution zones:

```
SET      BDY(TGT1)          /* Set to target zone.      */.
UCLIN                       /*                          */.
ADD      PROGRAM(PGM3)      /* Define new PROGRAM entry.*/
         DISTLIB(ADSTLIB)   /* Define DLIB.             */
         SYSLIB(SPGMLIB)    /* System library.          */
```

PROGRAM Entry (Distribution and Target Zone)

```
         FMID(MYPROG1)      /* Functional owner.        */.
ENDUCL                      /*                          */.
SET      BDY(DLB1)          /* Now do same to DLIB.     */.
UCLIN                       /*                          */.
ADD      PROGRAM(PGM3)      /* Define new PROGRAM entry.*/
         DISTLIB(ADSTLIB)   /* Define DLIB.             */
                            /* no SYSLIB info in DLIB.  */
         FMID(MYPROG1)      /* Functional owner.        */.
ENDUCL                      /*                          */.
```

SRC Entry (Distribution and Target Zone)

The SRC entry describes source that exists in the distribution or target libraries. (SMP/E assumes that for each SRC entry in a particular zone there exists a MOD entry with the same name.) There are two ways a SRC entry can be created:

- **Installing a SYSMOD that contains the source.** SRC entries are created the first time you install a SYSMOD that contains a ++SRC statement for source that does not yet have a SRC entry.
- **Processing JCLIN.** SRC entries can be built during JCLIN processing when SMP/E scans the assembler step and determines that the assembler input is a member of a partitioned data set.

  SRC entries can also be built when SMP/E scans copy steps and finds a SELECT statement that specifies TYPE=SRC.

SMP/E records the function and service level of the source in the SRC entry, as well as information about how that source affects the structure of the distribution or target libraries and modules. Once a SRC entry exists for source, it is updated as subsequent SYSMODs that affect the source are installed.

Subentries

These are the subentries for the SRC entry as they appear in the LIST output:

name
: is the name of the source represented by the SRC entry.

  The name can contain from 1 to 8 alphanumeric characters and $, #, @, or hex C0.

DISTLIB
: specifies the ddname of the distribution library for the source.

  The UCL operand is **DISTLIB(***ddname***)**.

  The ddname can contain from 1 to 8 alphanumeric characters.

FMID
: identifies the functional owner of this source. The functional owner is the last function SYSMOD that replaced this module.

  The UCL operand is **FMID(***sysmod_id***)**.

  The SYSMOD ID must contain 7 alphanumeric characters.

LASTUPD
: identifies the cause of the last change to this SRC entry.

  The UCL operand is **LASTUPD(***value***)**. This subentry can contain one of the following values:

  JCLIN
  : indicates that the change was made during JCLIN command processing.

  UCLIN
  : indicates that the change was made as a result of UCLIN processing.

  sysmod_id
  : indicates that the change was made during the installation of the indicated SYSMOD.

    The SYSMOD ID must contain 7 alphanumeric characters.

SRC Entry (Distribution and Target Zone)

LASTUPD TYPE
indicates how the entry was last changed.

The UCL operand is **LASTUPDTYPE(***value***)**. This subentry can contain one of the following values:
ADD The entry was added.
MOV The entry was moved.
UPD The entry was updated.

RMID
identifies the last SYSMOD that **replaced** this source. Any subsequent SYSMOD that modifies this module must have a defined relationship (such as PRE or SUP) with this SYSMOD.

The UCL operand is **RMID(***sysmod_id***)**.

- The SYSMOD ID must contain 7 alphanumeric characters.
- If **RMID** is not specified, but **FMID** is, SMP/E sets the RMID value to the specified FMID.

SYSLIB
specifies the ddname of the target library for the source.

The UCL operand is **SYSLIB(***ddname***)**.
- Only one SYSLIB value can be specified.
- The ddname can contain from 1 to 8 alphanumeric characters.

UMID
identifies all the SYSMODs that have **updated** this source since it was last replaced. Any subsequent SYSMOD that modifies this module must have a defined relationship (such as PRE or SUP) with all these SYSMODs.

The UCL operand is **UMID(***sysmod_id...***)**.

The SYSMOD ID must contain 7 alphanumeric characters.

LIST Examples

To list all the SRC entries in a particular zone, you could use the following commands:

```
SET      BDY(TGT1)          /* Set to requested zone.   */.
LIST     SRC                /* List all SRC entries.    */.
```

To list specific SRC entries, you could use these commands:

```
SET      BDY(TGT1)          /* Set to requested zone.   */.
LIST     SRC(SRC01          /* List only these two      */
             SRC02)         /* entries.                 */.
```

The format of the LIST output for each SRC entry is the same for both of these commands. The only difference is the number of SRC entries listed. Figure 50 is an example of LIST output for SRC entries.

```
PAGE nnnn  - NOW SET TO zzzzzz ZONE nnnnnnn  DATE mm/dd/yy TIME hh:mm:ss SMP/E 31.nn SMPLIST OUTPUT

TGT1          SOURCE ENTRIES

  NAME

SRC01     LASTUPD         = JXY1102 TYPE=ADD
          LIBRARIES       = DISTLIB=ASRCLIB   SYSLIB=SRCLIB
          FMID            = JXY1102
          RMID            = JXY1102

SRC02     LASTUPD         = JXY1000 TYPE=UPD
          LIBRARIES       = DISTLIB=ASRCLIB   SYSLIB=SRCLIB
          FMID            = JXY1121
          RMID            = UZ00010
          UMID            = UZ00014   UZ00015
```

Figure 50. SRC Entry: Sample LIST Output

By specifying the FORFMID operand, you can reduce the number of SRC entries listed. When **FORFMID** is specified, SMP/E lists a SRC entry only if its FMID matches one of the FMIDs specified on the FORFMID operand. For example, to list SRC entries whose FMIDs either are defined in FMIDSET TP or are JXY1102, you could use these commands:

```
SET      BDY(TGT1)          /* Set to target zone.      */.
LIST     SRC                /* List all source entries  */
         FORFMID(TP         /* for the TP FMIDSET       */
                 JXY1102)   /* and FMID JXY1102.        */.
```

You can also use the LIST command to find out the name of every SYSMOD that has modified source. To include the names of these SYSMODs in the LIST output, you can use the XREF operand, as shown in these commands:

```
SET      BDY(TGT1)          /* Set to requested zone.   */.
LIST     SRC                /* List all source entries  */
         XREF               /* and related SYSMODs.     */.
```

Notes:

1. XREF can be used either in mass mode or in select mode.
2. SMP/E obtains the data included for the XREF operand by checking for SRC and SRCUPD entries for this module in all the SYSMOD entries. Because this data is not contained in the SRC entry itself, you cannot use UCLIN to change it in the SRC entry.

Figure 51 on page 286 is an example of the LIST output produced when the XREF operand is used.

SRC Entry (Distribution and Target Zone)

```
PAGE nnnn  - NOW SET TO zzzzzz ZONE nnnnnnn  DATE mm/dd/yy TIME hh:mm:ss SMP/E 31.nn SMPLIST OUTPUT

TGT1          SOURCE ENTRIES


  NAME

SRC01     LASTUPD         = JXY1102 TYPE=ADD
          LIBRARIES       = DISTLIB=ASRCLIB   SYSLIB=SRCLIB
          FMID            = JXY1102
          RMID            = JXY1102
          SYSMOD HISTORY  = SYSMOD   TYPE      DATE   MCS     --STATUS--
                            JXY1102  FUNCTION 01.100  SRC     APP    ACC

SRC02     LASTUPD         = JXY1000 TYPE=UPD
          LIBRARIES       = DISTLIB=ASRCLIB   SYSLIB=SRCLIB
          FMID            = JXY1121
          RMID            = UZ00010
          UMID            = UZ00014   UZ00015
          SYSMOD HISTORY  = SYSMOD   TYPE      DATE   MCS     --STATUS--
                            JXY1102  FUNCTION 01.100  SRC     APP    ACC
                            JXY1121  FUNCTION 01.150  SRC     APP    ACC
                            UZ00010  PTF      01.150  SRC     APP
                            UZ00014  PTF      01.160  SRCUPD  APP
                            UZ00015  PTF      01.161  SRCUPD  APP
```

Figure 51. SRC Entry: Sample LIST Output When XREF Is Specified

UNLOAD Examples

To dump the SRC entries in UCL format, you can use the UNLOAD command. To unload all the SRC entries in a particular zone, you could use the following commands:

```
SET      BDY(TGT1)          /* Set to requested zone.   */.
UNLOAD   SRC                /* Unload all SRC entries.  */.
```

To unload specific SRC entries, you could use these commands:

```
SET      BDY(TGT1)          /* Set to requested zone.   */.
UNLOAD   SRC(SRC01          /* Unload only these two    */
             SRC02)         /* entries.                 */.
```

The format of the UNLOAD output for each SRC entry is the same for both of these commands. The only difference is the number of SRC entries listed. Figure 52 is an example of UNLOAD output for SRC entries.

```
UCLIN .
REP       SRC             ( SRC01    )
          LASTUPD         ( JXY1102  )
          LASTUPDTYPE     ( ADD )
          DISTLIB         ( ASRCLIB  )
          SYSLIB          ( SRCLIB   )
          FMID            ( JXY1102 )
          RMID            ( JXY1102 )
                          .
REP       SRC             ( SRC02    )
          LASTUPD         ( JXY1121  )
          LASTUPDTYPE     ( UPD )
          DISTLIB         ( ASRCLIB  )
          SYSLIB          ( SRCLIB   )
          FMID            ( JXY1121 )
          RMID            ( UZ00010 )
          UMID            ( UZ00014   UZ00015  )
                          .
ENDUCL.
```

Figure 52. SRC Entry: Sample UNLOAD Output

By specifying the FORFMID operand, you can reduce the number of SRC entries unloaded. When **FORFMID** is specified, SMP/E unloads a SRC entry only if its FMID matches one of the FMIDs specified on the FORFMID operand. For example, to unload SRC entries whose FMIDs either are defined in FMIDSET TP or are JXY1102, you could use these commands:

```
SET      BDY(TGT1)          /* Set to target zone.      */.
UNLOAD   SRC                /* Unload all source entries*/
         FORFMID(TP         /* for the TP FMIDSET       */
                 JXY1102)   /* and FMID JXY1102.        */.
```

UCLIN Examples

You can use the ADD, REP, and DEL UCL statements to change subentries in the SRC entry. After the UCLIN changes are done, the SRC entry must contain at least the following subentries:

- DISTLIB
- FMID
- RMID

Otherwise, there is not enough information in the entry to process the macro. If any of these subentries are missing, SMP/E does not make the requested UCL updates to the entry, and the entry remains as it was before the UCL command.

The following examples are provided to help you use the SRC entry.

Example 1: Adding a New SRC Entry

Assume that you have a user application installed and want to support it with SMP/E. To do this, you must record the modules in the target and distribution zones. You should identify the MOD and LMOD entries for your application by running the JCLIN function, using the appropriate link and copy steps as input. The source elements in your application will have to be entered through UCLIN. Assume that the FMID you wish to assign the product is ZUSR001 and that no service level is to be recorded. The following UCL statements should be used for each such source:

```
SET      BDY(TGT1)          /* Set to target zone.        */.
UCLIN                       /*                            */.
ADD      SRC(SRC01)         /* Define new source entry.   */
         DISTLIB(ASRCLIB)   /* Define DLIB,               */
```

```
        SYSLIB(SRCLIB)     /* system library
                              (never the SMPSTS or STS). */
        FMID(ZUSR001)      /* Functional owner (in this
                              example a user function).  */
                           /*                            */.
ENDUCL                     /*                            */.
SET     BDY(DLB1)          /* Now do same to DLIB.       */.
UCLIN                      /*                            */.
ADD     SRC(SRC01)         /* Define new source entry.   */
        DISTLIB(ASRCLIB)   /* Define DLIB,               */
        SYSLIB(SRCLIB)     /* system library
                              (never the SMPSTS or STS). */
        FMID(ZUSR001)      /* Functional owner (in this
                              example a user function).  */.
```

Example 2: Recording the Application of a Corrective Fix

Assume that you have installed a corrective fix, AZ12345, to source SRC01, outside of SMP/E, and that now you want to record that fix after it has been installed. (This is not necessary if the fix was initially installed with SMP/E.) Three updates must be made:

1. Record that the fix, AZ12345, is in the system.
2. Record that the fix is on the source.
3. Record that the source has been reassembled and installed.

The following UCL can be used to record these changes:

```
SET     BDY(TGT1)          /* Set to target zone.      */.
UCLIN                      /*                          */.
ADD     SYSMOD(AZ12345)    /* Add SYSMOD entry.        */
        APAR               /* Corrective fix.          */
        APPDATE(01100)     /* Date applied.            */
        APPTIME(08:00:00)  /* Time applied.            */
        FMID(FXY1102)      /* Functional owner.        */
        SRCUPD(SRC01)      /* Updated SRC01.           */
        ASSEM(SRC01)       /* Assembled it too.        */
                           /*                          */.
REP     SRC(SRC01)         /* Update SRC01 to          */
        UMID(AZ12345)      /* add update ID of APAR.   */
                           /*                          */.
REP     MOD(SRC01)         /* Update MOD entry         */
        RMID(AZ12345)      /* with new replacement ID. */
        RMIDASM            /* Was assembled.           */
                           /*                          */.
ENDUCL                     /*                          */.
SET     BDY(DLIB1)         /* Set to DLIB zone.        */.
UCLIN                      /*                          */.
ADD     SYSMOD(AZ12345)    /* Add SYSMOD entry.        */
        APAR               /* Corrective fix.          */
        RECDATE(01100)     /* Date received.           */
        RECTIME(08:00:00)  /* Time received.           */
        INSDATE(01100)     /* Date accepted.           */
        INSTIME(09:00:00)  /* Time accepted.           */
        FMID(FXY1102)      /* Functional owner.        */
        SRCUPD(SRC01)      /* Updated SRC01.           */
        ASSEM(SRC01)       /* Assembled it too.        */
                           /*                          */.
REP     SRC(SRC01)         /* Update SRC01 to          */
        UMID(AZ12345)      /* add update ID of APAR.   */
                           /*                          */.
REP     MOD(SRC01)         /* Update MOD entry         */
        RMID(AZ12345)      /* with new replacement ID. */
        RMIDASM            /* Was assembled.           */
                           /*                          */.
ENDUCL                     /*                          */.
```

STSSRC Entry (SMPSTS)

The STSSRC entry is a copy of source that resides only in a distribution library but is needed temporarily during APPLY processing. The STSSRC entry is in the SMPSTS data set, which serves as a target source library for such modules.

When SMP/E applies the SYSMODs that affect these source, it calls utility programs to store the modules on the SMPSTS. This way, the most current service level of each module is available for use in assemblies. After SMP/E has accepted all the SYSMODs that affect these source modules, it deletes the associated STSSRC entries from the SMPSTS.

Note: If you specify **SAVESTS** in the OPTIONS entry that is in effect during ACCEPT processing, SMP/E will not delete STSSRC entries from the SMPSTS after the SYSMODs that affect those source have been successfully accepted.

Subentries

The STSSRC entry contains no SMP/E data and appears to the system as a member of a normal source library.

LIST Examples

You cannot use SMP/E to list the STSSRC entries. However, you can use standard system utility programs (such as IEBGENER, IEBPTPCH, and IEHLIST) or products such as ISPF to display these entries or information about the data set.

UCLIN Examples

You can use the DEL UCL statement to delete an STSSRC entry from the SMPSTS. This can be helpful if you plan to do an APPLY followed by ACCEPT when several target libraries have been created from the same distribution library.

When a SYSMOD is accepted into a distribution zone, the entries associated with it are automatically deleted from the SMPSTS for the related target zone. However, even if the SYSMOD was also applied to other target zones created from the same distribution zone, SMP/E does not clean up the SMPSTS data sets for the other target zones.

To delete the entries from these data sets, you could accept the SYSMOD and name these other target zones as the related zone. However, this would update the distribution library each time; this is time-consuming and could use up space in the distribution library data set.

Instead, you can use the DEL command to delete these entries without updating the distribution library. To determine which entries to specify, check the SMPLOG data set to see which ones SMP/E deleted during ACCEPT processing.

Note: You can also use the CLEANUP command to delete STSSRC entries without specifying them individually. For more information, see the CLEANUP command in see the *SMP/E Commands* manual.

Example: Deleting an STSSRC Entry

Assume that you have two target zones, TGT1 and TGT2, generated off the same distribution zone, DLB1. During ACCEPT processing of a SYSMOD, SMP/E has deleted STSSRC SRC01 and SRC02 from the SMPSTS data set associated with target zone TGT2. After performing the ACCEPT, you want to delete the same

source from the SMPSTS associated with target zone TGT1. Assume either that you have a cataloged procedure for TGT1 with the correct SMPSTS specified, or that you have set up the correct DDDEF entries. You can use the following UCLIN to delete the STSSRC entry:

```
SET      BDY(TGT1)          /* Set to TGT1 zone.        */.
UCLIN                       /*                          */.
DEL      STSSRC(SRC01)      /* Delete the source.       */.
DEL      STSSRC(SRC02)      /* Delete the source.       */.
ENDUCL                      /*                          */.
```

Note: One UCL statement is required for each STSSRC entry to be deleted.

You can make the same changes by using system utilities; however, the SMPLOG will not reflect the processing done.

SYSMOD Entry (Distribution and Target Zone)

The SYSMOD entry in a distribution zone or a target zone describes a SYSMOD that has been installed in the corresponding distribution library or target library. This SYSMOD entry contains the same information as the global zone SYSMOD entry, except that it has information from only one ++VER statement, the one to install the SYSMOD.

When SMP/E installs a SYSMOD, it uses SYSMOD entries in the distribution or target zone to do the following:

- Determine the functional level of the system. SMP/E checks which function SYSMODs have been installed, and then uses that information to determine which service SYSMODs may be applicable.
- Determine the service level of the system. SMP/E checks which service SYSMODs have been installed.
- Make sure the requisites are satisfied for each SYSMOD to be installed. SMP/E checks whether a SYSMOD entry exists in the distribution or target zone for each requisite.

Subentries

These are the subentries for the SYSMOD entry as they appear in the LIST output:

sysmod_id
is the SYSMOD identification.

The SYSMOD ID must contain 7 alphanumeric characters.

ACCEPT
indicates that the SYSMOD has been successfully accepted.

The UCL operand is **ACCEPT**, **ACPT**, or **ACC**.

Note: This subentry exists only in the distribution zone. It is required in distribution zone SYSMOD entries.

APAR
indicates that this SYSMOD is an APAR, which provides a corrective fix to a problem.

The UCL operand is **APAR**.

APAR, FUNCTION, PTF, and USERMOD are mutually exclusive. If none of these operands is specified, **PTF** is the default.

APPLY
indicates that the SYSMOD has been successfully applied.

The UCL operand is **APPLY**, **APPL**, or **APP**.

Note: This subentry exists only in the target zone. It is required in target zone SYSMOD entries.

ASSEM
lists the assemblies done during the installation of this SYSMOD.

The UCL operand is **ASSEM(***name*...**)**.

The name can contain from 1 to 8 alphanumeric characters.

BYPASS
indicates that the BYPASS operand was specified when this SYSMOD was installed.

The UCL operand is **BYPASS**.

CIFREQ
lists the conditional requisites that must be installed when this function SYSMOD is installed.

Note: The data specified is used by SMP/E only when present in a function SYSMOD.

The UCL operand is **CIFREQ((***causer,req***)...)**.

- *causer* is the SYSMOD that specified this function SYSMOD on the FMID operand of an ++IF statement. *req* is the SYSMOD specified on the REQ operand as the conditional requisite associated with this function SYSMOD.
- The *causer* and *req* fields must contain 7 alphanumeric characters each.
- The CIFREQ operand is mutually exclusive with all other UCL operands. It will not cause LASTUPD and LASTUPDTYPE to be updated.

DELBY
specifies the SYSMOD that deleted this SYSMOD.

The UCL operand is **DELBY(***sysmod_id***)**.
- The SYSMOD ID must contain 7 alphanumeric characters.
- This subentry is valid only for function SYSMODs.
- The DELBY operand is mutually exclusive with all other UCL operands.

DELETE
lists the SYSMODs deleted by this SYSMOD.

The UCL operand is **DELETE(***sysmod_id***...)**.

The SYSMOD ID must contain 7 alphanumeric characters.

DELLMOD
indicates that the SYSMOD contained a ++DELETE statement.

The UCL operand is **DELLMOD**.

DESCRIPTION
specifies the descriptive name to be associated with this SYSMOD.

The UCL operand is **DESCRIPTION(***description***)**.

DLMOD
lists the load modules deleted by ++DELETE statements contained in this SYSMOD.

The UCL operand is **DLMOD(***name***...)**.

element
lists the data element replacements contained in the SYSMOD.

The UCL operand is *element***(***name***...)**.

- The name can contain from 1 to 8 alphanumeric characters.
- In place of *element*, specify one of the replacement values shown in Table 2 on page 10.
- Some types of elements, such as panels, messages, or text, may have been translated into several languages. In these cases, the *element* operand contains *xxx*, which represents the language used for the element. (If an

element was not translated, the *element* operand does not contain any *xxx* value.) Table 3 on page 13 shows the *xxx* values and the languages they represent.

ELEMMOV
indicates that the SYSMOD contained a ++MOVE statement.

The UCL operand is **ELEMMOV**.

EMOVE
lists the elements and load modules that were moved by ++MOVE statements contained in this SYSMOD.

The UCL operand is **EMOVE(***name*...**)**.

ERROR
indicates that an error has occurred during the processing of this SYSMOD.

The UCL operand is **ERROR**.

- This operand can also be specified as **ERR**.
- If the RESTORE subentry is set, the RESDATE operand **must** be specified, and the RESTIME and ERROR operands **should** be specified (SMP/E will automatically set it otherwise).

FEATURE
lists the names of the software features that contain this SYSMOD. The identified software features correspond to FEATURE entries in the global zone.

The UCL operand is **FEATURE(***name*,...**)**.

FESN
identifies the field engineering (FE) service number.

The UCL operand is **FESN(***string***)**.

The string must contain 7 alphanumeric characters.

FMID
identifies the function SYSMOD to which this SYSMOD is applicable.

The UCL operand is **FMID(***sysmod_id***)**.

The SYSMOD ID must contain 7 alphanumeric characters.

FUNCTION
indicates that this SYSMOD is a function, which introduces a new function into the system.

The UCL operand is **FUNCTION**.

APAR, FUNCTION, PTF, and USERMOD are mutually exclusive. If none of these operands is specified, **PTF** is the default.

hfs_element
lists the hierarchical file system element replacements in the SYSMOD.

The UCL operand is *hfs-element***(***name*...**)**.

The name can contain 1 to 8 uppercase alphabetic, numeric, or national ($, #, @) characters.

IFREQ
lists the conditional requisites that were installed with this SYSMOD.

The UCL operand is **IFREQ(***sysmod_id*...**)**.

SYSMOD Entry (Distribution and Target Zone)

INSTALLDATE
specifies the date on which this SYSMOD was installed.

The UCL operand is **INSTALLDATE(***yyddd***)**.

- This operand can also be specified as **INSDATE**. For a distribution zone SYSMOD entry, it can be specified as **ACCDATE**. For a target zone SYSMOD entry, it can be specified as **APPDATE**.
- The *yyddd* must contain 5 numeric characters. SMP/E does not check whether the specified numbers are valid.
- For the distribution zone SYSMOD entry, INSTALLDATE is the date the SYSMOD was accepted. For the target zone SYSMOD entry, INSTALLDATE is the date the SYSMOD was applied.

INSTALLTIME
specifies the time at which this SYSMOD was installed.

The UCL operand is **INSTALLTIME(***hh*:*mm*:*ss***)**.

- This operand can also be specified as **INSTIME**. For a distribution zone SYSMOD entry, it can be specified as **ACCTIME**. For a target zone SYSMOD entry, it can be specified as **APPTIME**.
- The *hh*, *mm*, and *ss* must contain 2 numeric characters each. The ":" must be coded as specified. SMP/E does not check whether the specified numbers are valid.
- For a distribution zone SYSMOD entry, INSTALLTIME is the time the SYSMOD was accepted. For a target zone SYSMOD entry, INSTALLTIME is the time the SYSMOD was applied.

JCLIN
indicates that the SYSMOD contained inline JCLIN.

The UCL operand is **JCLIN**.

LASTSUP
specifies the last SYSMOD that superseded this SYSMOD.

The UCL operand is **LASTSUP(***sysmod_id***)**.

The SYSMOD ID must contain 7 alphanumeric characters.

LASTUPD
identifies the cause of the last change to this entry.

The UCL operand is **LASTUPD(UCLIN)**, indicating that the change was made as a result of UCLIN processing.

LASTUPDTYPE
identifies the last type of update made to this entry.

The UCL operand is **LASTUPDTYPE(***value***)**. This subentry can contain one of the following values:
ADD The entry was added.
UPD The entry was updated.

MAC
lists the macro replacements (++MAC statements) in the SYSMOD.

The UCL operand is **MAC(***name...***)**.

The name can contain from 1 to 8 alphanumeric characters.

MACUPD
lists the macro updates (++MACUPD statements) in the SYSMOD.

The UCL operand is **MACUPD(***name*...**)**.

The name can contain from 1 to 8 alphanumeric characters.

MOD
lists the module replacements (++MOD statements) in the SYSMOD.

The UCL operand is **MOD(***name*...**)**.

The name can contain from 1 to 8 alphanumeric characters.

NPRE
lists negative prerequisite SYSMODs (that is, SYSMODs that must not be present in the system at the same time as this SYSMOD).

The UCL operand is **NPRE(***sysmod_id*...**)**.

- The SYSMOD ID must contain 7 alphanumeric characters.
- This subentry is valid only for function SYSMODs.

PRE
lists the prerequisite SYSMODs (that is, SYSMODs that must be present before this SYSMOD can be installed).

The UCL operand is **PRE(***sysmod_id*...**)**.

The SYSMOD ID must contain 7 alphanumeric characters.

PROGRAM
lists the program element replacements (++PROGRAM statements) in the SYSMOD.

The UCL operand is **PROGRAM(***name*...**)**.

The name can contain from 1 to 8 alphanumeric characters.

PTF
indicates that this SYSMOD is a PTF, which provides preventive service fixes.

The UCL operand is **PTF**.

APAR, FUNCTION, PTF, and USERMOD are mutually exclusive. If none of these operands is specified, **PTF** is the default.

RECDATE
specifies the date on which this SYSMOD was received.

The UCL operand is **RECDATE(***yyddd***)**.

The *yyddd* must contain 5 numeric characters. SMP/E does not check whether the specified numbers are valid.

RECTIME
specifies the time at which this SYSMOD was received.

The UCL operand is **RECTIME(***hh*:*mm*:*ss***)**.

The *hh*, *mm*, and *ss* must contain 2 numeric characters each. The ":" must be coded as specified. SMP/E does not check whether the specified numbers are valid.

REGEN
indicates how the SYSMOD was installed in the target libraries.

- In a DLIB zone SYSMOD entry, REGEN is not important. It is automatically set for all SYSMODs when they are accepted.
- In a target zone SYSMOD entry, if REGEN is set, it indicates that SYSGEN was used to install the SYSMOD in the target libraries. (The REGEN

indicator was carried over when the distribution zone was copied into the target zone. This is generally done as part of SYSGEN.)

If REGEN is not set, it indicates that the APPLY command was used to install the SYSMOD in the target libraries.

The UCL operand is **REGEN** or **RGN**.

RENLMOD
indicates that the SYSMOD contained a ++RENAME statement.

The UCL operand is **RENLMOD**.

REQ
lists requisite SYSMODs (that is, SYSMODs that must be installed concurrent with this SYSMOD).

The UCL operand is **REQ(***sysmod_id*...**)**.

The SYSMOD ID must contain 7 alphanumeric characters.

RESDATE
specifies the date on which this SYSMOD was restored.

The UCL operand is **RESDATE(***yyddd***)**.

- This subentry exists only in the target zone.
- The *yyddd* must contain 5 numeric characters. SMP/E does not check whether the specified numbers are valid.
- If a SYSMOD is marked “RESTORE”, the RESDATE operand **must** be specified, and the RESTIME and ERROR operands **should** be specified (SMP/E will automatically set it otherwise).

RESTIME
specifies the time that this SYSMOD was restored.

The UCL operand is **RESTIME(***hh*:*mm*:*ss***)**.

- This subentry exists only in the target zone.
- The *hh*, *mm*, and *ss* must contain 2 numeric characters each. The “:” must be coded as specified. SMP/E does not check whether the specified numbers are valid.
- If a SYSMOD is marked “RESTORE”, the RESDATE operand **must** be specified, and the RESTIME and ERROR operands **should** be specified (SMP/E will automatically set it otherwise).

RESTORE
indicates that a RESTORE attempt has been made for this SYSMOD. The RESTORE was not successful; otherwise, the SYSMOD entry would have been deleted.

The UCL operand is **RESTORE**.

- This subentry exists only in the target zone.
- This operand can also be specified as **REST** or **RES**.
- If a SYSMOD is marked “RESTORE”, the RESDATE operand **must** be specified, and the RESTIME and ERROR operands **should** be specified (SMP/E will automatically set it otherwise).

REWORK
identifies the level of the SYSMOD, which was received again for minor changes.

The UCL operand is **REWORK(***level***)**.

- Up to 8 numeric characters can be specified.
- For SYSMODs supplied by IBM, the REWORK level is *yyyyddd*, where *yyyy* is the year the SYSMOD was reworked and *ddd* is the Julian date.
- SMP/E does not check whether this data is valid.

RLMOD
indicates the load modules renamed by ++RENAME statements in this SYSMOD.

The UCL operand is **RLMOD(***name*...**)**.

SOURCEID
lists the character strings assigned to this SYSMOD during RECEIVE or CONVERT processing. These values may have been specified by the user on the RECEIVE command, included inline on the ++ASSIGN statement, or assigned by SMP/E after conversion.

The UCL operand is **SOURCEID(***source_id*...**)**.

The source ID can contain from 1 to 8 alphanumeric characters.

SRC
lists the source replacements (++SRC statements) in the SYSMOD.

The UCL operand is **SRC(***name*...**)**.

The name can contain from 1 to 8 alphanumeric characters.

SRCUPD
lists the source updates (++SRCUPD statements) in the SYSMOD.

The UCL operand is **SRCUPD(***name*...**)**.

The name can contain from 1 to 8 alphanumeric characters.

SUPBY
lists the SYSMODs that superseded this SYSMOD. For functions, this includes SYSMODs that both deleted and superseded this SYSMOD.

Note: The SUPBY field may appear as “SUPBY(IN SYSMD)”. For example, this is the case if the superseding SYSMODs were installed separately instead of on the same APPLY or ACCEPT command.

The UCL operand is **SUPBY(***sysmod_id*...**)**.
- This operand can also be specified as **SUP**.
- The SYSMOD ID must contain 7 alphanumeric characters.

SUPING
lists the SYSMODs superseded by this SYSMOD.

The UCL operand is **SUPING(***sysmod_id*...**)**.

The SYSMOD ID must contain 7 alphanumeric characters.

SZAP
lists the module superzaps (++ZAP statements) in the SYSMOD.

The UCL operand is **SZAP(***name*...**)**.

The name can contain from 1 to 8 alphanumeric characters.

UCLDATE
specifies the date on which this SYSMOD was last modified through UCLIN.

The UCL operand is **UCLDATE(***yyddd***)**.

The *yyddd* must contain 5 numeric characters. SMP/E does not check whether the specified numbers are valid.

UCLTIME
specifies the time that this SYSMOD was last modified through UCLIN.

The UCL operand is **UCLTIME(***hh*:*mm*:*ss***)**.

The *hh*, *mm*, and *ss* must contain 2 numeric characters each. The ":" must be coded as specified. SMP/E does not check whether the specified numbers are valid.

USERMOD
indicates that this SYSMOD is a USERMOD, which puts a user modification in the system.

The UCL operand is **USERMOD**.

APAR, FUNCTION, PTF, and USERMOD are mutually exclusive. If none of these operands is specified, **PTF** is the default.

VERNUM
specifies the relative number of the ++VER statement used when this SYSMOD was installed.

The UCL operand is **VERNUM(***nnn***)**.

- *nnn* can contain from 1 to 3 numeric characters.
- When updating an existing entry, you should not specify **VERNUM**. This causes SMP/E to assume the same VERNUM value as in the current entry.
- If you do not specify **VERNUM** when adding a new entry, SMP/E assumes a VERNUM value of 1.
- The VERNUM values are kept in each entry built from information from the ++VER statements. (For example, subentries such as PRE and REQ have unique VERNUM values.) If all entries do not have the same VERNUM, an error will result.

VERSION
lists the function SYSMODs that are versioned by this SYSMOD. Versioning indicates that, if there are any elements in common between the SYSMODs listed and this SYSMOD, this SYSMOD's elements are at a higher functional level, and are thus the ones that should be installed.

The UCL operand is **VERSION(***sysmod_id*...**)**.

The SYSMOD ID must contain 7 alphanumeric characters.

XZAP
lists the module superzaps in the SYSMOD (++ZAP statements) that contain an EXPAND statement (indicating that the module should be expanded before it is updated).

The UCL operand is **XZAP(***name*...**)**.

The name can contain from 1 to 8 alphanumeric characters.

LIST Examples

To list all the SYSMOD entries in a particular zone, you could use the following commands:

```
SET      BDY(TGT1)          /* Set to requested zone.   */.
LIST     SYSMOD             /* List all SYSMOD entries. */.
```

To list specific SYSMOD entries, you could use these commands:

```
SET      BDY(TGT1)          /* Set to requested zone.   */.
LIST     SYSMOD(UZ00001     /* List only these two      */
                UZ00002)    /* entries.                 */.
```

The format of the LIST output for each SYSMOD entry is the same for both of these commands. The only difference is the number of SYSMOD entries listed. Figure 53 and Figure 54 on page 300 are examples of LIST output for SYSMOD entries.

```
PAGE nnnn  - NOW SET TO zzzzzz ZONE nnnnnnn  DATE mm/dd/yy TIME hh:mm:ss SMP/E 31.nn SMPLIST OUTPUT

DLIB1         SYSMOD ENTRIES


  NAME

HZY1102   TYPE            = DELETED
          DELBY           = HZY2102

HZY2102   TYPE            = FUNCTION
          DESCRIPTION     = Sample function
          FEATURE         = SAMPRG1
          STATUS          = REC  ACC
          FMID            = HZY2102
          JCLIN           = YES
          FESN            = 1234567
          DATE/TIME REC   = 01.100  08:00:00
                    INS   = 01.102  08:08:00
          DELETE VER(001) = HZY1102   JZY1121   JZY1122
          NPRE   VER(001) = HZZ1102
          SUPING VER(001) = AZ11111   AZ11112   AZ11113
          VERS   VER(001) = HYY1102   JYY1121   JYY1122  JYY1123
          MAC             = MAC01     MAC02     MAC03
          MOD             = MOD01     MOD02     MOD03     MOD04
          SRC             = SRC01     SRC02

HZY2121   TYPE            = FUNCTION
          DESCRIPTION     = Sample function 2
          STATUS          = REC  ACC
          FMID            = HZY2121
          JCLIN           = YES
          FESN            = 1234567
          DATE/TIME REC   = 00.100  08:30:00
                    INS   = 00.108  08:38:00
          DELETE VER(001) = HZY1102   JZY1121   JZY1122
          FMID   VER(001) = HZY2102
          SUPING VER(001) = AZ11121   AZ11122   AZ11123
          MAC             = MAC01
          MOD             = MOD01     MOD02
          SRC             = SRC01     SRC03     SRC04

JZY1121   TYPE            = DELETED
          DELBY           = HZY2102

JZY1122   TYPE            = DELETED
          DELBY           = HZY2102
```

Figure 53. SYSMOD Entry: Sample LIST Output for a Distribution Zone

SYSMOD Entry (Distribution and Target Zone)

```
PAGE nnnn  - NOW SET TO zzzzzz ZONE nnnnnnn  DATE mm/dd/yy TIME hh:mm:ss SMP/E 31.nn SMPLIST OUTPUT

TGT1          SYSMOD ENTRIES


  NAME

AZ99001   TYPE            = APAR
          DESCRIPTION     = Sample APAR
          STATUS          = REC  APP
          FMID            = HZY2102
          DATE/TIME REC   = 01.100  08:00:00
                    INS   = 01.100  08:08:00
          LASTSUP         = UZ00010
          ZAP             = MOD01

AZ99002   TYPE            = SUPERSEDED
          LASTSUP         = UZ00010

LUS0001   TYPE            = USERMOD
          DESCRIPTION     = Sample user modification
          STATUS          = REC  APP
          FMID            = HZY2102
          DATE/TIME REC   = 00.100  08:00:00
                    INS   = 00.100  08:09:00
          PRE    VER(001) = UZ00010
          MACUPD          = MAC02

UZ00008   TYPE            = PTF
          DESCRIPTION     = Sample PTF
          STATUS          = REC  APP
          FMID            = HZY2102
          DATE/TIME REC   = 00.100  08:00:00
                    INS   = 00.100  08:08:00
          LASTSUP         = UZ00010
          SUPBY(IN SYSMD) = UZ00009

UZ00009   TYPE            = SUPERSEDED
          LASTSUP         = UZ00010

UZ00010   TYPE            = PTF
          STATUS          = REC  APP
          FMID            = HZY2102
          DATE/TIME REC   = 00.100  08:00:00
                    INS   = 00.100  08:10:00
          PRE    VER(001) = UZ00008   UZ00007
          REQ    VER(001) = UZ00040
          SUPING VER(001) = AZ99001   AZ99002   UZ00009
          MAC             = MAC01
          MACUPD          = MAC02
          MOD             = MOD01
          SRCUPD          = SRC01

UZ00011   TYPE            = PTF
          STATUS          = REC  APP
          FMID            = HXY2102
          DATE/TIME REC   = 01.250  08:00:00
                    INS   = 01.250  08:10:00
          SOURCEID        = ABC0106   PUT0104   XAU3380
          PRE    VER(001) = UZ00010
          MOD             = MOD01
```

Figure 54. SYSMOD Entry: Sample LIST Output for a Target Zone

By specifying various operands, you can reduce the number of SYSMOD entries listed. If you specify any of these operands on the LIST command, SMP/E automatically assumes that SYSMOD entries are to be processed, regardless of whether the SYSMOD operand was also specified. If you specify more than one of these operands on the same LIST command, only the SYSMODs that meet all the specified conditions are processed. For more information about these operands, see the *SMP/E Commands* manual.

You can also use the LIST command to find any other SYSMODs that specify this SYSMOD in their DEL, PRE, REQ, NPRE, SUP, or VERSION lists. To include the names of these SYSMODs in the LIST output, you can use the XREF operand, as shown in these commands:

```
SET      BDY(DLIB1)         /* Set to requested zone.     */.
LIST     SYSMOD             /* List all SYSMOD entries    */
         XREF               /* and SYSMOD that hit them.  */.
```

Note: XREF can be used either in mass mode or in select mode.

Figure 55 is an example of the LIST output produced when the XREF operand is used.

```
PAGE nnnn  - NOW SET TO zzzzzz ZONE nnnnnnn  DATE mm/dd/yy TIME hh:mm:ss SMP/E 31.nn SMPLIST OUTPUT

DLIB1         SYSMOD ENTRIES


  NAME

UZ12345   TYPE            = PTF
          STATUS          = REC
          FMID            = HZY2100
          DATE/TIME REC   = 00.150  08:00:00
                    INS   = 00.160  08:08:00
          SUPING VER(001) = AZ11111   AZ11112   AZ11113
          MAC             = MAC01     MAC02     MAC03
          MOD             = MOD01     MOD02     MOD03     MOD04
          SRC             = SRC01     SRC02
          NPREBY   (XREF) = UZ00001   UZ00002
          PREBY    (XREF) = UZ00003   UZ00004
          REQBY    (XREF) = UZ00005   UZ00006
          VERSIONBY(XREF) = UZ00007   UZ00008
          DELBY    (XREF) = UZ00009   UZ00010
          IFREQBY  (XREF) = UZ00011   UZ00012
          SUPBY    (XREF) = UZ00013   UZ00014
```

Figure 55. SYSMOD Entry: Sample LIST Output When XREF Is Specified

Note: Some of the *xxx*BY subentries listed in this example are not actually valid for the type of SYSMOD shown (that is, PTF). For example, a SYSMOD does not specify VERSION, NPRE, or DELETE for a PTF SYSMOD. Those subentries are included here only to show the format of the output.

UNLOAD Examples

To dump the SYSMOD entries in UCL format, you can use the UNLOAD command. To unload all the SYSMOD entries in a particular zone, you could use the following commands:

```
SET      BDY(TGT1)          /* Set to requested zone.     */.
UNLOAD   SYSMOD             /* Unload all SYSMOD entries. */.
```

SYSMOD Entry (Distribution and Target Zone)

To unload specific SYSMOD entries, you could use these commands:

```
SET      BDY(TGT1)          /* Set to requested zone.     */.
UNLOAD   SYSMOD(UZ00001     /* Unload only these two      */
                UZ00002)    /* entries.                   */.
```

The format of the UNLOAD output for each SYSMOD entry is the same for both of these commands. The only difference is the number of SYSMOD entries listed. Figure 56 is an example of UNLOAD output for one SYSMOD.

```
UCLIN .
REP       SYSMOD          ( HZY2102  )
          /* TYPE      */   FUNCTION
          DESCRIPTION     ( Sample Function )
          FEATURE         ( SAMPRG1 )
          /* STATUS    */   ACC
          RECDATE         ( 01100 )
          RECTIME         ( 08:08:00 )
          INSDATE         ( 01101 )
          INSTIME         ( 10:00:34 )
          VERNUM          ( 002 )
          PRE             ( UZ00001   UZ00002   UZ00003 )
          REQ             ( UZ00004   UZ00005   UZ00006 )
          SUPING          ( AZ00001   AZ00002   AZ00003 )
          MOD             ( MOD01     MOD02    )
          MAC             ( MAC01    )
          SRC             ( SRC01     SRC02     SRC03   )
                          .
REP       SYSMOD          ( HZY2102 )
          CIFREQ          (
                            ( UZ00087 UZ00088 )
                            ( UZ00090 UZ00090 )
                          )
                          .
ENDUCL.
```

Figure 56. SYSMOD Entry: Sample UNLOAD Output

By specifying various operands, you can reduce the number of SYSMOD entries unloaded. If you specify any of these operands on the UNLOAD command, SMP/E automatically assumes that SYSMOD entries are to be processed. If you specify more than one of these operands on the same UNLOAD command, only those SYSMODs that meet all the specified conditions are processed. For more information about these operands, see the *SMP/E Commands* manual.

UCLIN Examples

You can use the ADD, REP, and DEL UCL statements to change subentries in the SYSMOD entry. Generally, after UCLIN changes are done, the SYSMOD entry must contain at least these subentries, unless the entire entry has been deleted:

- ACCEPT or APPLY
- APAR, FUNCTION, PTF, or USERMOD
- INSTALLDATE
- RECDATE
- FMID

Otherwise, there is not enough information in the entry to process the SYSMOD. If any of the required subentries are missing, SMP/E does not make the requested UCL updates to the entry, and the entry remains as it was before the UCL command.

Note: The entry for a deleted SYSMOD can contain just the DELBY subentry. The entry for a superseded SYSMOD can contain just the SUPBY subentry. The entry for a SYSMOD that is both deleted and superseded can contain just the DELBY and SUPBY subentries.

The following examples are provided to help you use the SYSMOD entry.

Example 1: Creating a SYSMOD Entry

Assume that you have installed an APAR fix outside of SMP/E and now wish to get that fix recorded in the distribution zone. The APAR number was AZ12345, and was an update to a source SRC01. The following UCL should be used:

```
SET      BDY(DLIB1)         /* Set to DLIB zone.        */.
UCLIN                       /*                          */.
ADD      SYSMOD(AZ12345)    /* Specify SYSMOD.          */
         SRCUPD(SRC01)      /* Changed this source.     */
         RECDATE(00100)     /* Received on this date.   */
         INSDATE(00100)     /* Accepted same day.       */
         ASSEM(SRC01)       /* Assembled source.        */
         FMID(FZY2102)      /* Functional owner.        */
                            /*                          */.
ADD      SRC(SRC01)         /* Now update source entry  */
         UMID(AZ12345)      /* with update ID.          */
                            /*                          */.
REP      MOD(SRC01)         /* Now update MOD           */
         RMID(AZ12345)      /* with new replacement ID  */
         RMIDASM            /* from assembly.           */
                            /*                          */.
ENDUCL                      /*                          */.
```

Example 2: Removing the ERROR Indicator

Assume that during an APPLY you encountered an error that caused a PTF to be marked as in error. After looking at the output you determine that the PTF actually installed correctly, and rather than reinstall the PTF you decide to make the appropriate changes to make the PTF look installed. The following UCL can be used:

```
SET      BDY(TGT1)          /* Set to target zone.      */.
UCLIN                       /*                          */.
DEL      SYSMOD(UZ12345)    /* Specify SYSMOD.          */
         RESTORE            /* Delete restore.          */
         RESDATE()          /* Delete restore date.     */
         RESTIME()          /* Delete restore time.     */
                            /*                          */.
ADD      SYSMOD(UZ12345)    /* Specify SYSMOD.          */
         APPLY              /* Add apply info.          */
         INSDATE(00100)     /*                          */
         INSTIME(08:00:00)  /*                          */
                            /*                          */.
ENDUCL                      /*                          */.
```

Note: This method is very prone to errors. The preceding example gets the SYSMOD marked as having been applied; however, you have not made all the changes necessary to get the rest of the target zone entries coordinated. Those changes include updating the RMID and UMID fields of all the elements affected by the PTF, storing superseded SYSMOD entries, and updating the global zone SYSMOD entry.

If you are not extremely familiar with SMP/E internals and how to complete the update process, the recommended method is to reapply the PTF.

SYSMOD Entry (Global Zone)

The global zone SYSMOD entry describes a SYSMOD that exists as an MCS entry in the SMPPTS. It contains information that SMP/E obtained when it received that SYSMOD. Because SMP/E processing is designed to keep the global zone SYSMOD entry and the MCS entry synchronized, you should use only SMP/E commands to update these entries. If you use system utilities to update the MCS entries, you will get unpredictable results when processing the corresponding SYSMOD. For more information about MCS entries, see “MCS Entry (SMPPTS)” on page 246.

When SMP/E processes SYSMODs, it uses the global zone SYSMOD entry to determine which SYSMODs are applicable or whether the SYSMODs you selected are applicable. In addition, after a SYSMOD has been successfully applied or accepted, SMP/E records in the SYSMOD entry the names of the zones to which the SYSMOD was applied or accepted.

Note: Although this information is saved in the global zone SYSMOD entry, it is used only for reporting purposes. SMP/E does not use it during APPLY, ACCEPT, or RESTORE processing to determine the status of a SYSMOD. Instead, SMP/E uses SYSMOD entries in the target and distribution zones to determine whether a SYSMOD has been applied or accepted.

A SYSMOD entry is generally kept in the global zone until the associated SYSMOD is accepted; then the entry is deleted. You may want SMP/E to save the global zone SYSMOD entries after ACCEPT processing (for example, if you plan to do a system generation). To do this, specify NOPURGE in the OPTIONS entry that is in effect during ACCEPT processing. Likewise, you may want to save the global zone SYSMOD entries after RESTORE processing. To do this, specify NOREJECT in the OPTIONS entry that is in effect during RESTORE processing.

Subentries

These are the subentries for the global zone SYSMOD entry as they appear in the LIST output. Only a few of these subentries can be changed with UCLIN. The description of each entry indicates whether UCLIN may be used and, if so, what the correct syntax is.

sysmod_id
: is the SYSMOD identification.

  The SYSMOD ID must contain 7 alphanumeric characters.

ACCEPT ZONE
: lists the distribution zones into which the SYSMOD has been successfully accepted.

  The UCL operand is **ACCID(***zone...***)**.

  The name can contain from 1 to 7 alphanumeric characters.

APAR
: indicates that this SYSMOD is an APAR, which provides a corrective fix to a problem.

  There is no UCL support for this subentry in the global zone.

APPLY ZONE
: lists the target zones to which the SYSMOD has been successfully applied.

  The UCL operand is **APPID(***zone...***)**.

The name can contain from 1 to 7 alphanumeric characters.

DELLMOD
indicates that the SYSMOD contained a ++DELETE statement.

The UCL operand is **DELLMOD**.

DELETE
lists the SYSMODs deleted by this SYSMOD.

There is no UCL support for this subentry in the global zone.

DESCRIPTION
specifies the descriptive name to be associated with this SYSMOD.

The UCL operand is **DESCRIPTION(***description***)**.

DLMOD
lists the load modules deleted by ++DELETE statements contained in this SYSMOD.

The UCL operand is **DLMOD(***name*...**)**.

element
lists the data element replacements in the SYSMOD.

There is no UCL support for this subentry in the global zone.

In place of *element*, you will see one of the values shown in Table 2 on page 10.

Some types of elements, such as panels, messages, or text, may have been translated into several languages. In these cases, the *element* operand contains *xxx*, which represents the language used for the element. (If an element was not translated, the *element* operand does not contain any *xxx* value.) Table 3 on page 13 shows the *xxx* values and the languages they represent.

ELEMMOV
indicates that the SYSMOD contained a ++MOVE statement.

The UCL operand is **ELEMMOV**.

EMOVE
lists the elements and load modules that were moved by ++MOVE statements contained in this SYSMOD.

ERROR
indicates that an error occurred when this SYSMOD was received.

There is no UCL support for this subentry in the global zone.

FEATURE
lists the names of the software features that contain this SYSMOD. The identified software features correspond to FEATURE entries in the global zone.

The UCL operand is **FEATURE(***name*,...**)**.

FESN
identifies the field engineering (FE) service number.

There is no UCL support for this subentry in the global zone.

FMID
identifies the function SYSMOD to which this SYSMOD is applicable.

There is no UCL support for this subentry in the global zone.

SYSMOD Entry (Global Zone)

FUNCTION
indicates that this SYSMOD is a function, which introduces a new function into the system.

There is no UCL support for this subentry in the global zone.

hfs_element
lists the hierarchical file system element replacements (++hfs_element statements) in the SYSMOD.

There is no UCL support for this subentry in the global zone.

HOLDERROR
lists the error hold reason IDs in effect for this SYSMOD.

The actual ++HOLD statement associated with each reason ID (HOLDDATA) is not in the SYSMOD entry. However, if the LIST command specified HOLDDATA and SYSMOD, the listing of the SYSMOD entry includes the HOLDDATA. For more information, see information about listing HOLDDATA with the LIST command in the *SMP/E Commands* manual.

There is no UCL support for this subentry in the global zone.

HOLDSYSTEM
lists the system hold reason IDs in effect for this SYSMOD.

The actual ++HOLD statement associated with each reason ID (HOLDDATA) is not in the SYSMOD entry. However, if the LIST command specified HOLDDATA and SYSMOD, the listing of the SYSMOD entry includes the HOLDDATA. For more information, see information about listing HOLDDATA with the LIST command in the *SMP/E Commands* manual.

HOLDSYSTEM subentries show either **INT** or **EXT** to indicate the source of the ++HOLD statement.

- **INT** means that the ++HOLD statement was contained in the held SYSMOD. The held SYSMOD can be installed only if the BYPASS operand is specified on the APPLY or ACCEPT command.
- **EXT** means that the ++HOLD statement was obtained from another source, such as SMPHOLD. The held SYSMOD can be installed only if the BYPASS operand is specified on the APPLY or ACCEPT command or if the hold is removed by a ++RELEASE statement.

There is no UCL support for this subentry in the global zone.

HOLDUSER
lists the user hold reason IDs in effect for this SYSMOD.

The actual ++HOLD statement associated with each reason ID (HOLDDATA) is not in the SYSMOD entry. However, if the LIST command specified HOLDDATA and SYSMOD, the listing of the SYSMOD entry includes the HOLDDATA. For more information, see information about listing HOLDDATA with the LIST command in the *SMP/E Commands* manual.

There is no UCL support for this subentry in the global zone.

JCLIN
indicates that the SYSMOD contained inline JCLIN.

There is no UCL support for this subentry in the global zone.

MAC
lists the macro replacements (++MAC statements) in the SYSMOD.

There is no UCL support for this subentry in the global zone.

MACUPD
lists the macro updates (++MACUPD statements) in the SYSMOD.

There is no UCL support for this subentry in the global zone.

MOD
lists the module replacements (++MOD statements) in the SYSMOD.

There is no UCL support for this subentry in the global zone.

NPRE
lists negative prerequisite SYSMODs (that is, SYSMODs that must not be present in the system at the same time as this SYSMOD).

There is no UCL support for this subentry in the global zone.

PRE
lists prerequisite SYSMODs (that is, SYSMODs that must be present before this SYSMOD can be installed).

There is no UCL support for this subentry in the global zone.

PROGRAM
lists the program element replacements (++PROGRAM statements) in the SYSMOD.

There is no UCL support for this subentry in the global zone.

PTF
indicates that this SYSMOD is a PTF, which provides preventive service fixes.

There is no UCL support for this subentry in the global zone.

RECDATE
specifies the date on which this SYSMOD was received.

There is no UCL support for this subentry in the global zone.

RECTIME
specifies the time at which this SYSMOD was received.

There is no UCL support for this subentry in the global zone.

RENLMOD
indicates that the SYSMOD contained a ++RENAME statement.

The UCL operand is **RENLMOD**.

REQ
lists requisite SYSMODs (that is, SYSMODs that must be installed concurrent with this SYSMOD).

There is no UCL support for this subentry in the global zone.

REWORK
identifies the level of the SYSMOD, which was received again for minor changes.

For SYSMODs supplied by IBM, the REWORK level is *yyyyddd*, where *yyyy* is the year the SYSMOD was reworked and *ddd* is the Julian date.

There is no UCL support for this subentry in the global zone.

RLMOD
indicates the load modules renamed by ++RENAME statements in this SYSMOD.

The UCL operand is **RLMOD(***name*...**)**.

SOURCEID
lists the character strings assigned to this SYSMOD during RECEIVE or CONVERT processing. These values may have been specified by the user on the RECEIVE command, included inline on the ++ASSIGN statement, or assigned by SMP/E after conversion.

The UCL operand is **SOURCEID(***source_id*...**)**.

The source ID can contain from 1 to 8 alphanumeric characters.

SRC
lists the source replacements (++SRC statements) in the SYSMOD.

There is no UCL support for this subentry in the global zone.

SRCUPD
lists the source updates (++SRCUPD statements) in the SYSMOD.

There is no UCL support for this subentry in the global zone.

SREL
is the system or subsystem release specified on the indicated ++VER MCS in the SYSMOD; for example, SREL VER(001) = Z038. This SREL value matches an SREL value defined in the GLOBALZONE entry that was used when receiving the SYSMOD. These are the systems and subsystems defined by IBM, with their SRELs:

System	SREL
DB2	P115
CICS	C150
IMS	P115
MVS	Z038
NCP	P004

There is no UCL support for this subentry in the global zone.

SUPING
lists the SYSMODs superseded by this SYSMOD.

There is no UCL support for this subentry in the global zone.

SZAP
lists the module superzaps (++ZAP statements) in the SYSMOD.

There is no UCL support for this subentry in the global zone.

TLIBPREFIX
is the high-level data set name qualifier of the SMPTLIB data sets used to receive this SYSMOD, which was packaged in RELFILEs. This is the DSPREFIX value that was used during RECEIVE processing.

The UCL operand is **TLIBPREFIX(***prefix***)**.
- The prefix can contain from 1 to 26 alphanumeric characters.
- The prefix must follow standard naming conventions for data sets.

Note: If the TLIBPREFIX subentry is deleted from the entry for a SYSMOD packaged in RELFILE format, the SYSMOD cannot be applied or accepted until the TLIBPREFIX subentry is re-created with the current prefix for the SMPTLIB data sets.

USERMOD
indicates that this SYSMOD is a USERMOD, which puts a user modification into the system.

There is no UCL support for this subentry in the global zone.

VERSION
lists the function SYSMODs that are versioned by this SYSMOD. Versioning indicates that, if there are any elements in common between the SYSMODs listed and this SYSMOD, this SYSMOD's elements are at a higher functional level, and are therefore the ones that should be installed.

There is no UCL support for this subentry in the global zone.

XZAP
lists the module superzaps (++ZAP statements) in the SYSMOD that contain an EXPAND statement (indicating that the module should be expanded before it is updated).

There is no UCL support for this subentry in the global zone.

LIST Examples

To list all the SYSMOD entries in a global zone, you can use the following commands:

```
SET      BDY(GLOBAL)        /* Set to requested zone.   */.
LIST     SYSMOD             /* List all SYSMOD entries. */.
```

To list specific SYSMOD entries in a global zone, you can use these commands:

```
SET      BDY(GLOBAL)        /* Set to requested zone.   */.
LIST     SYSMOD(UZ00001     /* List only these two      */
                UZ00002)    /* entries.                 */.
```

To list specific SYSMOD entries in the global zone along with the associated HOLDDATA, you can use these commands:

```
SET      BDY(GLOBAL)        /* Set to requested zone.     */.
LIST     SYSMOD(UZ12345     /* List only these two        */
                UZ56789)    /* entries                    */
         HOLDDATA           /* plus HOLDDATA for them.    */.
```

The format of the LIST output for each SYSMOD entry is the same for all of these commands. The only differences are the number of SYSMOD entries listed and the amount of information presented for each entry (HOLDDATA causes additional information to be listed).

Figure 57 on page 310, Figure 58 on page 311, and Figure 59 on page 312 are examples of LIST output for SYSMOD entries.

Note: If HOLDDATA for a particular SYSMOD has been received but the SYSMOD itself has not yet been received, only the hold information for the SYSMOD is listed. For an example, see SYSMOD UZ56789 in Figure 59 on page 312.

SYSMOD Entry (Global Zone)

```
PAGE nnnn  - NOW SET TO zzzzzz ZONE nnnnnnn  DATE mm/dd/yy TIME hh:mm:ss SMP/E 31.nn SMPLIST OUTPUT

GLOBAL        SYSMOD ENTRIES


  NAME

JXY2102   TYPE            = FUNCTION
          STATUS          = REC
          JCLIN           = YES
          FESN            = 1234567
          TLIBPREFIX      = SMP.RELFILE
          DATE/TIME REC   = 00.100  08:00:00
          APPLY ZONE      = TGT1      TGT2
          ACCEPT ZONE     = DLIB1     DLIB2
          SREL   VER(001) = Z038
          DELETE VER(001) = JXY1102   JXY1121   JXY1122
          NPRE   VER(001) = HZZ1102
          SUPING VER(001) = AZ11111   AZ11112   AZ11113
          VERS   VER(001) = HYY1102   JYY1121   JYY1122  JYY1123
          MAC             = MAC01     MAC02     MAC03
          MOD             = MOD01     MOD02     MOD03     MOD04
          SRC             = SRC01     SRC02

JXY2121   TYPE            = FUNCTION
          STATUS          = REC
          JCLIN           = YES
          FESN            = 1234567
          TLIBPREFIX      = SMP.RELFILE
          DATE/TIME REC   = 00.100  08:30:00
          APPLY ZONE      = TGT1      TGT2
          ACCEPT ZONE     = DLIB1     DLIB2
          SREL   VER(001) = Z038
          DELETE VER(001) = JXY1102   JXY1121   JXY1122
          FMID   VER(001) = JXY2102
          SUPING VER(001) = AZ11121   AZ11122   AZ11123
          MAC             = MAC01
          MOD             = MOD01     MOD02
          SRC             = SRC01     SRC03     SRC04

AZ99801   TYPE            = APAR
          STATUS          = REC
          DATE/TIME REC   = 00.100  08:00:00
          APPLY ZONE      = TGT1      TGT2
          ACCEPT ZONE     = DLIB1     DLIB2
          SREL   VER(001) = Z038
          FMID   VER(001) = JXY2102
          ZAP             = MOD01
```

Figure 57. SYSMOD Entry: Sample LIST Output for a Global Zone (Example 1)

```
PAGE nnnn  - NOW SET TO zzzzzz ZONE nnnnnnn  DATE mm/dd/yy TIME hh:mm:ss SMP/E 31.nn SMPLIST OUTPUT

GLOBAL        SYSMOD ENTRIES


  NAME

LUS0001   TYPE            = USERMOD
          STATUS          = REC
          DATE/TIME REC   = 00.100  08:00:00
          APPLY ZONE      = TGT1      TGT2
          ACCEPT ZONE     = DLIB1     DLIB2
          SREL   VER(001) = Z038
          FMID   VER(001) = JXY2102
          PRE    VER(001) = UZ00010
          MACUPD          = MAC02

UZ00010   TYPE            = PTF
          STATUS          = REC
          DATE/TIME REC   = 00.100  08:00:00
          APPLY ZONE      = TGT1      TGT2
          ACCEPT ZONE     = DLIB1     DLIB2
          SREL   VER(001) = Z038
          FMID   VER(001) = JXY2102
          PRE    VER(001) = UZ00008   UZ00007
          REQ    VER(001) = UZ00040
          SUPING VER(001) = AZ99801   AZ99802   UZ00009
          MAC             = MAC01
          MACUPD          = MAC02
          MOD             = MOD01
          SRC             = SRC01
          SRCUPD          = SRC01

UZ00011   TYPE            = PTF
          STATUS          = REC
          DATE/TIME REC   = 00.150  08:00:00
          SOURCEID        = ABC0106   PUT0104   XAU3380
          APPLY ZONE      = TGT1      TGT2
          ACCEPT ZONE     = DLIB1     DLIB2
          SREL   VER(001) = Z038
          FMID   VER(001) = JXY2102
          PRE    VER(001) = UZ00010
          MOD             = MOD01
```

Figure 58. SYSMOD Entry: Sample LIST Output for a Global Zone (Example 2)

SYSMOD Entry (Global Zone)

```
PAGE nnnn  - NOW SET TO zzzzzz ZONE nnnnnnn  DATE mm/dd/yy TIME hh:mm:ss SMP/E 31.nn SMPLIST OUTPUT

GLOBAL        SYSMOD ENTRIES


  NAME

UZ12345   TYPE            = PTF
          STATUS          = REC
          DATE/TIME REC   = 00.100  08:00:00
          SREL   VER(001) = Z038
          DELETE VER(001) = HBB2102
          SUPING VER(001) = AZ11111   AZ11112   AZ11113
          MAC             = MAC01     MAC02     MAC03
          MOD             = MOD01     MOD02     MOD03     MOD04
          SRC             = SRC01     SRC02
          HOLDERROR       = AZ00001   ++HOLD(UZ12345) ERROR
                                          REASON(AZ00001) FMID(HBB2102)
                                          COMMENT(SMRTDATA(CHGDTE(011105) SYMP(PRV,IPL))).
          HOLDERROR       = AZ00002   ++HOLD(UZ12345) ERROR
                                          REASON(AZ00002) FMID(HBB2102)
                                          COMMENT(SMRTDATA(CHGDTE(011106) SYMP(FUL))).
          HOLDSYSTEM(INT) = DOC       ++HOLD(UZ12345) SYSTEM
                                          REASON(DOC) FMID(HBB2102)
                                          COMMENT(NEW MSG).
          HOLDSYSTEM(EXT) = UCLIN     ++HOLD(UZ12345) SYSTEM
                                          REASON(UCLIN) FMID(HBB2102)
                                          COMMENT(UCLIN REQUIRED).
          HOLDUSER        = INUSE     ++HOLD(UZ12345) USER
                                          REASON(INUSE) FMID(HBB2102)
                                          COMMENT(IM MODIFYING).

UZ56789   HOLDERROR       = AZ00023   ++HOLD(UZ56789) ERROR
                                          REASON(AZ00023) FMID(HBB2102)
                                          COMMENT(SMRTDATA(CHGDTE(011110) SYMP(ABENDS with E37))).
          HOLDERROR       = AZ00024   ++HOLD(UZ56789) ERROR
                                          REASON(AZ00024) FMID(HBB2102)
                                          COMMENT(SMRTDATA(CHGDTE(011113) SYMP(DAL) FIX(UW92458))).
```

Figure 59. SYSMOD Entry: Sample LIST Output When HOLDDATA Is Specified

UCLIN Examples

You can use the ADD, REP, and DEL UCL statements to change subentries in a SYSMOD entry. When you use UCLIN to update a SYSMOD entry, remember that if a DEL statement deletes all the existing subentries in the entry, SMP/E deletes the entire entry.

The following examples are provided to help you use the SYSMOD entry.

Example 1: Changing the SOURCEID of a SYSMOD

Assume that you received a SYSMOD and assigned it a SOURCEID value of DATALINK, and that you now wish to change the SOURCEID value to PUT0101 so that the SYSMOD will be installed with that service level. The following UCL can be used to change the SOURCEID value:

```
SET      BDY(GLOBAL)        /* Set to global zone.      */.
UCLIN                       /*                          */.
REP      SYSMOD(UZ00001)    /* Specify SYSMOD.          */
         SOURCEID(PUT0101)  /* Change SOURCEID value.   */
                            /*                          */.
ENDUCL                      /*                          */.
```

Example 2: Indicating That a SYSMOD Was Applied

Assume that you have received some service, accepted it with the BYPASS(APPLYCHECK) operand, and then performed a system generation. That service is now actually in the target libraries, and you would like that recorded in the global zone SYSMOD entry. Assume that the name of your target zone is TGT1. The following UCL can be used:

```
SET      BDY(GLOBAL)        /* Set to global zone.      */.
UCLIN                       /*                          */.
ADD      SYSMOD(UZ00001)    /* Specify SYSMOD.          */
         APPID(TGT1)        /* Applied to this zone.    */
                            /*                          */.
ENDUCL                      /*                          */.
```

Note: One UCL statement is required for each SYSMOD.

TARGETZONE Entry (Target Zone)

The TARGETZONE entry contains information SMP/E uses to process a specific target zone and the associated target libraries. It is created by UCLIN and must be defined before you can do any other processing for that target zone.

Subentries

These are the subentries for the TARGETZONE entry as they appear in the LIST output:

name
is the name of the target zone. You assign the name when the zone is created.

The name can contain from one to seven alphanumeric characters (A–Z, 0–9) or national characters ($, #, @). The first character must be alphabetic.

OPTIONS
is the name of the OPTIONS entry in the global zone that should be used in processing this target zone. For more information, see “OPTIONS Entry (Global Zone)” on page 265.

The UCL operand is **OPTIONS(***name***)**.

- The name can contain from one to eight alphanumeric characters.
- This name can be overridden by using the OPTIONS parameter on the SET command. For more information, see the *SMP/E Commands* manual.
- If no OPTIONS entry name is specified, SMP/E uses a set of default utility values when processing this target zone. For more information, see “OPTIONS Entry (Global Zone)” on page 265.

RELATED
is the name of the distribution zone to which this target zone is related. A target zone is related to the distribution zone used to build the target libraries, such as during system generation.

The UCL operand is **RELATED(***zone***)**.

- The zone name can contain from one to seven alphanumeric characters.
- Although the entry can be defined without this subentry, you **must** define the subentry before you can install any SYSMODs in the target libraries.

SREL
lists the system releases to be supported in this target zone.

The UCL operand is **SREL(***srel*...**)**.

- The SREL must contain four alphanumeric characters, usually one alphabetic character followed by three numeric characters. These are the SRELs defined by IBM:

System	SREL
DB2	P115
CICS	C150
IMS	P115
MVS	Z038
NCP	P004

- Although the entry can be defined without this subentry, you **must** define the subentry before you can install any SYSMODs in the target libraries.

Note: Although you can support multiple products with different SREL values from one target zone, those products are still subject to all other

restrictions related to combining products in one zone. The most common reason for not being able to combine products is common element names. For example, modules or macros with the same name are found in both products, but reside in different libraries.

TIEDTO
specifies other target zones that either:

- Supplied modules for load modules controlled by this target zone
- Control load modules that have been link-edited with modules supplied by this target zone

The UCL operand is **TIEDTO(***zone*...**)**.

Note: TIEDTO subentries are added automatically during LINK command processing. However, they are **never** automatically deleted.

XZLINK
specifies whether APPLY and RESTORE processing in another zone should automatically update load modules in this zone when cross-zone modules previously added to those load modules by the LINK command are changed.

The UCL operand is **XZLINK(***value***)**.

- This subentry can contain one of the following values:

  DEFERRED
  Cross-zone load modules controlled by this zone should **not** be automatically updated when modules previously included in them by the LINK command are updated or deleted.

  To make sure that the modules are synchronized with the cross-zone load modules and that the cross-zone information in SMP/E entries is correct, some combination of the following commands must be run later (depending on how the module changes affect the load modules):

  – LINK command, to include modules in the affected load modules
  – Link-edit (outside of SMP/E), to delete modules from the affected load modules
  – UCLIN command, to update cross-zone subentries as necessary

  AUTOMATIC
  Cross-zone load modules controlled by this zone should be automatically updated when modules previously included in them by the LINK command are updated or deleted.

- If XZLINK is not specified, SMP/E uses the default value of DEFERRED.
- XZLINK does not affect processing of the LINK command.
- The XZLINK(DEFERRED) value is listed only when the TARGETZONE entry contains TIEDTO records.

ZDESC
is a user-written description for this zone.

The UCL operand is **ZONEDESCRIPTION(***text***)**.

- The zone description can be in single-byte characters (such as English alphanumeric characters) or in double-byte characters (such as Kanji).
- The zone description can contain up to 500 bytes of data, including blanks. (For double-byte data, the 500-byte maximum includes all shift-in and shift-out characters, as well as the double-byte characters.) Extra blanks are deleted. All data beyond column 72 is ignored, including blanks.

- The zone description cannot be only blanks.
- If parentheses are included in the text, they must be in matched pairs.

LIST Examples

To list the TARGETZONE entry for a particular target zone, you can use the following commands:

```
SET      BDY(TGT1)          /* Set to requested target. */.
LIST     TARGETZONE         /* List TARGETZONE entry.   */.
```

Figure 60 is an example of LIST output for a TARGETZONE entry.

```
PAGE nnnn  - NOW SET TO zzzzzz ZONE nnnnnnn  DATE mm/dd/yy TIME hh:mm:ss SMP/E 31.nn SMPLIST OUTPUT

TGT1          TZONE ENTRY


  NAME

TGT1      TZONE           = TGT1
          ZDESC           = ZONE DESCRIPTION FOR TGT1 ZONE
          RELATED         = DLIB1
          SREL            = P115      R020      Z038
          OPTIONS         = OPTTGT1
          XZLINK          = AUTOMATIC
          TIEDTO          = CICS1     IMS1
```

Figure 60. TARGETZONE Entry: Sample LIST Output

UCLIN Examples

You can use the ADD, REP, and DEL UCL statements to change subentries in the TARGETZONE entry. When you use UCLIN to update a TARGETZONE entry, remember that if a DEL statement deletes all the existing subentries in the entry, SMP/E deletes the entire entry.

The following examples are provided to help you use the TARGETZONE entry.

Example 1: Defining a TARGETZONE Entry

Assume that you are about to build a new set of target libraries and thus wish to define a new target zone named TGT2. The distribution zone that you have done the system generation from is DLIB1, the OPTIONS entry that will be set up will be called OPTTGT2, and the target zone will contain MVS (Z038) and two additional programs, each with its own SREL value (P010 and R020). The target zone will exist in data set SMPE.SMPCSI.CSI. Use the following UCLIN to define the new zone.

```
SET      BDY(GLOBAL)        /* Set to global zone.      */.
UCLIN                       /* UCLIN for GZONE entry    */.
ADD      GZONE              /* to set up                */
         ZONEINDEX(         /* index for new zone.      */
                   (TGT2,SMPE.SMPCSI.CSI,TARGET) /*     */
                  )         /*                          */
                            /*                          */.
ENDUCL                      /* End global zone update.  */.
SET      BDY(TGT2)          /* Now define new zone.     */.
UCLIN                       /* UCLIN to define it.      */.
ADD      TARGETZONE(TGT2)   /* Identify name.           */
         OPTIONS(OPTTGT2)   /* OPTIONS entry to use.    */
         SREL(Z038,         /* SRELs for MVS and        */
              P010,         /* two other                */
              R020)         /* programs.                */
```

```
         RELATED(DLIB1)     /* Generated from DLIB.     */
                            /*                          */.
ENDUCL                      /*                          */.
```

Note: Even though the OPTIONS entry has not been set up yet, you can still refer to it in the TARGETZONE entry. Prior to processing this target zone the OPTIONS entry must be created. For examples of setting up the OPTIONS entries, see “OPTIONS Entry (Global Zone)” on page 265.

Example 2: Formatting a Zone Description

Assume that you enter the following zone description with the first line ending in column 72 and the second line starting in column 1:

```
----+----1----+----2----  ...  ----5----+----6----+----7--
SET      BDY(TGT1)          /* Set to tgt zone.         */.
UCLIN                       /* UCLIN for TZONE entry    */.
ADD      TZONE(TGT1)        /* to set up.               */
         ZDESC(                THIS IS THE DESCRIPTION FOR
THE TGT1 ZONE)
                            /* End of zone description. */.
ENDUCL                      /* End tgt zone update.     */.
```

Because there is no blank between the word ending in column 72 and the next word starting in column 1, SMP/E will run the two together.

Words in a zone description, even words that end in column 72, must be separated by a blank. To format the zone description in this example correctly, you can put a blank at the beginning of the second line:

```
----+----1----+----2----  ...  ----5----+----6----+----7--
SET      BDY(TGT1)          /* Set to tgt zone.         */.
UCLIN                       /* UCLIN for TZONE entry    */.
ADD      TZONE(TGT1)        /* to set up.               */
         ZDESC(                THIS IS THE DESCRIPTION FOR
 THE TGT1 ZONE)
                            /* End of zone description. */.
ENDUCL                      /* End tgt zone update.     */.
```

Because there is a blank explicitly coded between the word ending in column 72 and the word starting in column 1, SMP/E will not run the words together.

UTILITY Entry (Global Zone)

The UTILITY entry contains information that SMP/E uses when invoking a particular system utility program, such as the load module name of the program and the parameters that should be passed. This information is used only if the UTILITY entry is named in the OPTIONS entry that is in effect. For example, to have SMP/E use certain parameters when it calls a specific link-edit utility, you must do the following:

1. Define a UTILITY entry that names the program and specifies the parameters.
2. Define an OPTIONS entry that specifies that UTILITY entry as the one to use for the link-edit utility.
3. Put that OPTIONS entry into effect, either by specifying it on the SET command or by defining it as the default OPTIONS entry for the zone to be processed.

If the OPTIONS entry does not point to a UTILITY entry for a particular system utility, SMP/E uses default values for that utility. Table 7 lists the default values for the various types of utility programs.

Table 7. Default Values for UTILITY Entries

Utility	NAME	RC	PRINT	PARM
Access method services	IDCAMS	0	SYSPRINT	
Assembler	ASMA90	4	SYSPRINT	XREF, NOOBJECT, DECK
Compress	IEBCOPY	0	SYSPRINT	
Copy	IEBCOPY	0	SYSPRINT	
Hierarchical file system copy	BPXCOPY	0	SYSPRINT (see note 3)	
Link-edit utility	IEWBLINK or IEWL (see note 1)	8	SYSPRINT	LET, LIST, NCAL, XREF (see note 2)
Retry after *x*37 abends	IEBCOPY	0	SYSPRINT	
Update	IEBUPDTE	0	SYSPRINT	Determined by SMP/E during processing
Superzap	IMASPZAP	4	SYSPRINT	

Notes:

1. When the DFP level supports the binder, IEWBLINK is the default link-edit utility. When the DFP level does not support the binder, IEWL is the default.
2. When the load module being link-edited contains a CALLLIBS subentry list, SMP/E does not always use NCAL by default. In this case, SMP/E uses CALL for the link to the actual target library or NCAL for the link to the SMPLTS library. SMP/E always uses NCAL for ACCEPT processing.
3. If SYSTSPRT is specified as the PRINT value, it is ignored and the default of SYSPRINT is used instead.

If a UTILITY entry defines some, but not all, of these subentries, SMP/E uses the default values for the subentries not specified. For more information about OPTIONS entries, see “OPTIONS Entry (Global Zone)” on page 265.

Notes:

1. Besides defining the information that is passed to utility programs, you can define which utility programs SMP/E is authorized to load. This is done through module GIMUTTBL. For more information, see Chapter 13, “GIMUTTBL: Specifying Which Utilities SMP/E Can Call”.
2. Because SMP/E runs authorized, all the utility programs called by SMP/E must reside in an authorized library. The utility program must be in either LINKLIB or the link pack area (LPA).

Subentries

These are the subentries for the UTILITY entry as they appear in the LIST output:

name
is the name of the UTILITY entry.

The name can contain from 1 to 8 alphanumeric characters.

LIST
indicates whether member names should be listed when SMP/E invokes a copy utility to perform compress processing, retry processing, or element installation.

The UCL operand is **LIST(YES|NO)**.

- YES indicates that member names should be listed during copy processing. This is the default.
- NO indicates that the list of member names should be suppressed during copy processing.
- The LIST value (including the default value) is ignored when the UTILITY entry is not for a copy utility.

NAME
is the name of the load module for the utility program that SMP/E is to call. Table 7 on page 318 lists the default names used by SMP/E if the OPTIONS entry in effect does not point to a UTILITY entry for a specific system utility.

The UCL operand is **NAME(***prog***)**.

The name can contain from 1 to 8 alphanumeric characters. The first character must be alphabetic.

PARM
specifies the parameters to be passed to the utility program. SMP/E may add other parameters to this list. Table 7 on page 318 lists the default parameters used by SMP/E if the OPTIONS entry in effect does not point to a UTILITY entry for a specific system utility.

The UCL operand is **PARM(***string***)**.

- If you specify **PARM**, you must specify all the parameters to be passed. You cannot specify a single value to add or change just one parameter.
- The parameter string is usually a hexadecimal character string with a length of up to 100 characters. This 100-character limit can be exceeded for a binder link-edit step using the OPTION option. For a more detailed explanation, see the GENERATE command chapter in the *SMP/E Commands* manual. No validity checking is done on the string. If any blanks are specified between the parentheses, they will be deleted by SMP/E during processing.
- If the string contains parentheses, they must be in matched pairs. SMP/E assumes it has reached the end of the specified string when it encounters a

closing parenthesis for the opening parenthesis. For example, the following is valid because there are matching parentheses within the string:

```
PARM(LIST,LET,SIZE=(1526K,80K),NCAL)
```

Parentheses within quotation marks are still considered parentheses. The next example is not valid because there are unmatched parentheses. SMP/E would continue scanning after the last parenthesis looking for another “)”.

```
PARM(PRINT(A),SPECIALCHAR'(')
```

Likewise, the following example is not valid. SMP/E would stop at the “)” after SPECIALCHAR and give a syntax error on the closing quotation mark.

```
PARM(PRINT(A),SPECIALCHAR')')
```

- **Assembler utility:** If no PARM subentry is specified for an assembler utility, SMP/E passes the default PARM values shown for assembler utilities in Table 7 on page 318.

  If you change the PARM subentry, either include DECK in the parameters chosen or ensure that the assembler program produces an object deck.
- **HFS copy utility:** If the UTILITY entry for the HFS copy utility specifies a PARM value, those parameters are passed to the utility in addition to any parameters saved in the hierarchical file system element entry.
- **Link-edit utility:** SMP/E constructs the string of link-edit parameters to be passed to the link-edit utility in the following steps:
  1. If a PARM subentry is specified for a link-edit utility, SMP/E starts the string with the parameters specified in the PARM subentry. Otherwise, SMP/E starts the string with the default parameters LET, LIST, NCAL, and XREF.
  2. If SMP/E finds any link edit parameters in the LMOD entry for the load module being link-edited, SMP/E adds those parameters to the string.
  3. If the load module being link-edited contains a CALLLIBS subentry list, then:
     – SMP/E adds CALL for the link to the actual target library
     – SMP/E adds NCAL for the link to the SMPLTS library

     Any parameter added by this step will override any CALL or NCAL parameters added in previous steps, whether they were explicitly specified or assumed by default.
  4. Finally, if SMP/E determines that the binder is available on the system and SMP/E is processing CSECT deletes, SMP/E adds the STORENX link-edit parameter to the parameter list. (If you use the linkage-editor instead of the binder, STORENX will cause “INVALID” to appear in the “invocation parameters list” output of the linkage-editor. This has no effect on processing.)

  The consolidated parameter list is passed to the link-edit utility.

  LET, LIST, and sometimes either CALL or NCAL are ordinarily required for maintenance of IBM operating systems. If you change the PARM subentry, be sure to include LET, LIST, and any other required parameters in the parameters chosen. For more information, see the APPLY command chapter in the *SMP/E Commands* manual.

  Note: Before using the GENERATE command to create JCL that will update files in the hierarchical file system, you may want to add **UID(0)** to the

PARM value so that the JCL created by GENERATE will include UID(0) in the execution parameter string for the link-edit utility. Specify UID(0) if all the following are true:

1. Your UID is not 0 but you are authorized to the BPX.SUPERUSER facility class profile. The UID(0) option, in this case, causes the binder to set an effective UID of 0 for its execution.
2. The binder invoked by the generated JCL is at the proper level to understand the UID option.
3. UID 0 authority is needed for the binder's execution in the JCL created by the GENERATE command in order to update files in the hierarchical file system.

If you do specify UID(0) for GENERATE, you must remove it after GENERATE has run, so that it is not used for other SMP/E commands (such as APPLY, which handles setting the effective UID itself prior to invoking the binder).

- **Update utility:** The PARM subentry for an update utility must not specify MOD or NEW.

PRINT

specifies the ddname that is to contain output from the utility (for example, SYSPRINT). Table 7 on page 318 lists the default ddnames used by SMP/E if the OPTIONS entry in effect does not point to a UTILITY entry for a specific system utility.

The UCL operand is **PRINT(***ddname***)**.

The value specified can contain from 1 to 8 alphanumeric characters. The first character must be alphabetic.

Notes:

1. The ddname specified for PRINT can affect whether you receive print output from this utility. For example, if you specify a DDDEF for a DUMMY data set or a DDDEF for a data set that is sent to a SYSOUT class that suppresses output, you do not receive print output from this utility.
2. If SYSTSPRT is specified as the PRINT value for the HFS copy utility, it is ignored and the default of SYSPRINT is used instead.

RC

specifies the maximum acceptable return code from this utility. If the return code is higher than this value, SMP/E normally assumes that the requested processing failed. However, the RETURN CODE value in the LMOD entry overrides (for that load module) the value in the UTILITY entry. Also, the success of a link-edit in the SMPLTS library is based on the following:

- Link-edits into the SMPLTS with a return code of 8 or less are considered successful regardless of the threshold return code specified in the UTILITY entry.
- Link-edits into the SMPLTS with a return code of greater than 8 are considered successful or failures based on the threshold (normal processing). If the SMPLTS link-edit return code is less than or equal to the threshold return code, it is considered successful. If the SMPLTS link-edit return code is greater than the threshold return code, it is considered a failure.

Table 7 on page 318 lists the default return codes used by SMP/E if the OPTIONS entry in effect does not point to a UTILITY entry for a specific system utility.

UTILITY Entry (Global Zone)

The UCL operand is **RC(*rc*)**.

- The value can be from 0 to 16.
- The installation information for a product (such as the product program directory) may state the utility return codes you should expect during SMP/E processing. For example, it may state the expected link-edit return codes for its load modules during SMP/E processing. The expected return code may be 4 or 8, because post-SMP/E link-edit work is required (for example, the load modules may require interface routines or compiler library routines). Such return codes allow the SYSMODs to be installed, but they also require you to check the actual link-edit return code in the GIM23903I or GIM23903W messages in order to determine the actual success of utility processing.

  Before using the default SMP/E return codes (especially for link-edit processing), check the installation information for the products you plan to install and determine the appropriate maximum acceptable return codes for utility processing. You may find that you need to set up more than one UTILITY entry for a particular utility program in order to accommodate different maximum return codes for various products. (As a result, you may need additional OPTIONS entries to point to the appropriate UTILITY entries.)

LIST Examples

To list all the UTILITY entries in a global zone, you can

```
SET      BDY(GLOBAL)        /* Set to requested zone.     */.
LIST     UTILITY            /* List all UTILITY entries.  */.
```

To list specific UTILITY entries in a global zone, you can use these commands:

```
SET      BDY(GLOBAL)        /* Set to requested zone.   */.
LIST     UTILITY(IEUASM     /* List only these three    */
                 IEWL       /* entries.                 */
                 MYX37)     /*                          */.
```

The format of the LIST output for each UTILITY entry is the same for both of these commands. The only difference is the number of UTILITY entries listed.

Figure 61 shows an example of LIST output for UTILITY entries.

```
PAGE nnnn  - NOW SET TO zzzzzz ZONE nnnnnnn  DATE mm/dd/yy TIME hh:mm:ss SMP/E 31.nn SMPLIST OUTPUT

GLOBAL        UTILITY ENTRIES


  NAME

IEUASM    PRINT           = MYSYSPRT

IEWL      PARM            = SIZE=(1526K,80K)

MYX37     NAME            = USERRCVR
          PARM            = TYPE=FAST
          PRINT           = X37PRINT
          RC              = 4
          LIST            = NO
```

Figure 61. UTILITY Entry: Sample LIST Output

UCLIN Examples

You can use the ADD, REP, and DEL UCL statements to change subentries in a UTILITY entry. When you use UCLIN to update a UTILITY entry, keep these points in mind:

- After the UCLIN changes are done, the UTILITY entry must contain at least one of the following subentries:
  - NAME
  - PARM
  - PRINT
  - RC

  Otherwise, there is not enough information in the entry for SMP/E to use the entry.
- If a DEL statement deletes all the existing subentries in the entry, SMP/E deletes the entire entry.

The following examples are provided to help you use the UTILITY entry.

Example 1: Changing the DD Statement for SYSPRINT Output

Assume that you wish to direct all the SYSPRINT output for assemblies to the MYSYSPRT DD statement rather than to the SYSPRINT DD statement. To do this you need to build a UTILITY entry for the assembler and then specify that UTILITY entry in the OPTIONS entry that will be in effect. Assume that the UTILITY entry to be defined is named IEUASM, and that the OPTIONS entry to be used is MYOPT1. The following UCL will accomplish your objectives:

```
SET      BDY(GLOBAL)        /* Set to global zone.      */.
UCLIN                       /*                          */.
ADD      UTILITY(IEUASM)    /* Assembler utility.       */
         PRINT(MYSYSPRT)    /* Alternate SYSPRINT       */
                            /* Other values remain as
                               in SMP/E defaults.       */.
REP      OPTIONS(MYOPT1)    /* Connect to OPTIONS.      */
         ASM(IEUASM)        /* Use IEUASM for ASM.      */
                            /*                          */.
ENDUCL                      /*                          */.
```

Note: Remember, if you specify a DDDEF for a DUMMY data set or a DDDEF for a data set that is sent to a SYSOUT class that suppresses output, you do not receive SYSPRINT output from this utility.

Example 2: Defining Link-Edit Utility Parameters

Assume that you wish to always pass the **SIZE=(1526K,80K)** parameter to the link-edit utility. To do this you need to build a UTILITY entry for the link-edit utility and then specify that UTILITY entry in the OPTIONS entry that will be in effect. Assume that the UTILITY entry to be defined is named IEWL, and that the OPTIONS entry to be used is MYOPT1. The following UCL will accomplish your objectives:

```
SET      BDY(GLOBAL)            /* Set to global zone.      */.
UCLIN                           /*                          */.
ADD      UTILITY(IEWL)          /* Link-edit utility.       */
         PARM(LET,              /* PARM values.             */
              SIZE=(1526K,80K), /*                          */
              NCAL)             /*                          */
                                /* Other values remain as
                                   in SMP/E defaults.       */.
REP      OPTIONS(MYOPT1)        /* Connect to OPTIONS.      */
         LKED(IEWL)             /* Use IEWL for LKED.       */
                                /*                          */.
ENDUCL                          /*                          */.
```

Example 3: Defining a User Utility Program

Assume that you wish SMP/E to call a user routine, USERRCVR, rather than IEBCOPY, in order to recover from *x*37 abends. In addition to the program name change, the program must also receive parameter **TYPE=FAST**. You want to indicate that the output should go to X37PRINT rather than SYSPRINT, and that a return code of 4 or less is acceptable. You also want to suppress the listing of member names during retry processing done by your program. To do this you need to build a UTILITY entry for the program, and then specify the UTILITY entry in the OPTIONS entry that will be in effect. Assume that the UTILITY entry to be defined is named MYX37, and that the OPTIONS entry to be used is MYOPT1. The following UCL will accomplish your objectives:

```
SET      BDY(GLOBAL)        /* Set to global zone.      */.
UCLIN                       /*                          */.
ADD      UTILITY(MYX37)     /* Retry/recovery program.  */
         NAME(USERRCVR)     /* Program name.            */
         PARM(TYPE=FAST)    /* PARM value.              */
         PRINT(X37PRINT)    /* SYSPRINT ddname.         */
         RC(4)              /* Highest acceptable       */
                            /* return code.             */
         LIST(NO)           /* No list of member names. */
                            /*                          */.
REP      OPTIONS(MYOPT1)    /* Connect to OPTIONS.      */
         RETRY(MYX37)       /* Use MYX37 for RETRY.     */
                            /*                          */.
ENDUCL                      /*                          */.
```

ZONESET Entry (Global Zone)

The ZONESET entry defines a group of zones to be used to limit the SYSMODs processed by an SMP/E command. For example, you can specify a ZONESET on the ZONESET operand of the REPORT command. This defines which zones SMP/E should check for installed SYSMODs that specify conditional requisites that might be needed for functions in other zones in the ZONESET. A ZONESET may also define a group of zones to be checked or ignored by the REJECT command.

Subentries

These are the subentries for the ZONESET entry as they appear in the LIST output:

name
: is the name of the ZONESET. The name can contain from 1 to 8 alphanumeric characters.

To avoid confusion and undesired results, you may want to avoid giving a ZONESET the same name as any of the target or distribution zones defined to the global zone that will contain the ZONESET entry. This is because, on some SMP/E command operands, you can specify zones and ZONESETs. When ZONESETs and zones have the same name, you might not get the results you wanted.

For example, suppose you have a ZONESET named Z001 and a zone named Z001. If you specify **Z001** on an SMP/E command operand, SMP/E assumes that you want to use the zones defined in ZONESET Z001 (which might or might not include zone Z001), and not the individual zone Z001.

XZREQCHK
: indicates whether this ZONESET should be used when establishing the default zone group for the APPLY, ACCEPT, and RESTORE commands.

The UCL operand is **XZREQCHK(YES|NO)**.

- YES indicates that the ZONESET should be used when establishing the default zone group.
- NO indicates that the ZONESET should not be used when establishing the default zone group. NO is the default.
- The XZREQCHK value (including the default value) is ignored when the XZGROUP operand is specified on the APPLY, ACCEPT, or RESTORE command.

ZONE
: lists the target or distribution zones that are to be part of this ZONESET.

The UCL operand is **ZONE(***zone*...**)**.

- Each value can contain from 1 to 7 alphanumeric characters.
- A ZONESET can contain both target and distribution zones.
- All the zones in a ZONESET must be defined in the same global zone as the ZONESET entry.
- The zones cannot be defined in global zones that are in different SMPCSI data sets. For an example of defining a ZONESET in order to report on zones controlled by different global zones, see the REPORT CROSSZONE command in the *SMP/E Commands* manual.

LIST Examples

To list all the ZONESET entries in a global zone, you can use the following commands:

ZONESET Entry (Global Zone)

```
SET      BDY(GLOBAL)        /* Set to global zone.       */.
LIST     ZONESET            /* List all ZONESET entries. */.
```

To list specific ZONESET entries in a global zone, you can use these commands:

```
SET      BDY(GLOBAL)        /* Set to global zone.       */.
LIST     ZONESET(ZST2       /* List only these           */
                 ZST4)      /* entries.                  */.
```

The format of the LIST output for each ZONESET entry is the same for both of these commands. The only difference is the number of ZONESET entries listed.

Figure 62 shows an example of LIST output for ZONESET entries.

```
PAGE nnnn  - NOW SET TO zzzzzz ZONE nnnnnnn  DATE mm/dd/yy TIME hh:mm:ss SMP/E 31.nn SMPLIST OUTPUT

GLOBAL                   ZONESET ENTRIES


ZST2          ZONE     = ZONE21   ZONE22   ZONE23

ZST4          ZONE     = ZONE41   ZONE42   ZONE43
```

Figure 62. ZONESET Entry: Sample LIST Output

UCLIN Examples

You can use the ADD, REP, and DEL UCL statements to change subentries in a ZONESET entry. When you use UCLIN to update a ZONESET entry, keep these points in mind:

- After the UCLIN changes are done, the ZONESET entry must contain at least a ZONE subentry. Otherwise, the entry contains so little information that SMP/E cannot use it.
- If a DEL statement deletes all the existing subentries in the entry, SMP/E deletes the entire entry.

Example: Defining a ZONESET Entry

Assume that you have a system with four target zones: BP111, PROD111, BP999, and PROD999. BP111 and BP999 define two different base control programs. PROD111 and PROD999 are two versions of the same product that must be synchronized with each other and with their base control programs (PROD111 with BP111 and PROD999 with BP999). To keep service for these products at the same level, you can group BP111, PROD111, and PROD999 in one ZONESET (S111) and BP999, PROD999, and PROD111 in a second ZONESET (S999). The following UCL will define the ZONESET entries:

```
SET      BDY(GLOBAL)        /* Set to global zone.      */.
UCLIN                       /*                          */.
ADD      ZONESET(S111)      /* ZONESET S111.            */
         ZONE(BP111,        /* Include these target     */
              PROD111,      /* zones.                   */
              PROD999)      /*                          */
                            /*                          */.
ADD      ZONESET(S999)      /* ZONESET S999.            */
         ZONE(BP999,        /* Include these target     */
              PROD999,      /* zones.                   */
              PROD111)      /*                          */
                            /*                          */.
ENDUCL                      /*                          */.
```

Chapter 6. SMP/E CSI Application Programming Interface

This chapter documents intended Programming Interfaces that allow the customer to write programs to obtain the services of IBM SMP/E for z/OS and OS/390, V3R1.

This chapter describes the SMP/E CSI application program interface (GIMAPI), which provides access to data stored and used by SMP/E. This data is stored in a VSAM data set called the CSI (Consolidated Software Inventory). The purpose of GIMAPI is to provide you with read-only access to data maintained by SMP/E in the CSI.

Overview of GIMAPI

GIMAPI is a program (load module) provided with IBM SMP/E for z/OS and OS/390, V3R1 that can be called by a user-written application program to query the contents of the CSI.

GIMAPI uses data structures both to receive the query parameters from the caller and to return the query output to the caller. To request a query, you must set up the data structure containing the appropriate query parameters and call GIMAPI.

The general form of the GIMAPI call is:
where *apicmd* specifies the API command that GIMAPI is to process (either

```
GIMAPI(apicmd,parmptr,outptr,language,rc,cc,msgbuff)
```

QUERY, FREE or VERSION). See “QUERY Command”, “FREE Command” on page 359 and “VERSION Command” on page 360 for descriptions of these commands and a detailed description of how the remaining parameters *parmptr*, *outptr*, *language*, *rc*, *cc*, and *msgbuff*) are used on those commands.

QUERY Command

Use the QUERY command to retrieve data from a zone or set of zones within a CSI. You specify the details of your query by setting parameters on the call to the QUERY command. These parameters determine what data is returned from the query. The data is returned to the calling program in a set of data structures.

QUERY Command Parameters

Here is an example of a call to the QUERY command:

```
GIMAPI('QUERY    ',parmptr,outptr,'language',rc,cc,msgbuff)
```

QUERY is a keyword that specifies that GIMAPI is to process a query request. Note that it is necessary to pad the string containing the QUERY command with blanks to bring it to a length of eight characters.

parmptr A 4-byte pointer to an area of storage owned by the calling program that contains a data structure whose elements are the parameters for the QUERY command. A generic data structures definition can be found in “Data Structures for QUERY Command” on page 356.

© Copyright IBM Corp. 1986, 2002

outptr
A pointer variable that is to be set by GIMAPI with the address of an area of storage owned by GIMAPI that contains the output from the QUERY command. For the QUERY command, the output is a set of linked lists that both contains and describes the requested data. See section "QUERY Command Output" on page 352 for more details on the QUERY command output.

language
A 3-byte character string specifying the language that QUERY command is to use when issuing messages. The valid values are:

ENU	US English
JPN	Japanese

Note: Specifying *language* as three blanks is also valid and is equivalent to specifying "ENU".

rc
A storage area owned by the calling program representing a 4-byte numeric variable. The value of the variable is set by GIMAPI to the return code of the QUERY command processing. The return code represents the severity of the condition raised by the GIMAPI processing. These codes may be returned:

0 Indicates the function terminated successfully. The *cc* value is also set to zero (0) when the return code is 0.

4 Indicates a warning condition was detected during execution of GIMAPI. The *cc* value given indicates the specific warning condition. When a warning occurs, the GIMAPI command continues processing. Appropriate warning messages are written to the message buffer.

8 Indicates an error condition was detected during execution of GIMAPI. The *cc* value given indicates the specific error condition. When an error occurs, the GIMAPI command terminates after storing the error condition in the message buffer. Other GIMAPI commands may be invoked from the calling program.

12 Indicates a severe error condition was detected during execution of GIMAPI. The *cc* value given indicates the specific error condition. When a severe error occurs, GIMAPI terminates after storing the severe condition in the message buffer. The calling program should not make any more calls to GIMAPI.

16 Indicates a terminating error condition was detected during execution of GIMAPI. The *cc* value given indicates the specific error condition. When a terminating error occurs, GIMAPI terminates after storing the condition in the message buffer. The calling program should not make any more calls to GIMAPI.

cc
A storage area owned by the calling program representing a 4-byte numeric variable. The value of the variable is set by GIMAPI to the condition code of the GIMAPI processing. The condition code, also known as a reason code, indicates the specific situation that occurred during GIMAPI processing. The condition code corresponds to the error message stored for the condition. For example, if error message GIM30400S is to be issued, the return code value is 8 and the condition code is 30400.

More than one error condition may occur during a call to GIMAPI. This is most likely during syntax checking, because GIMAPI checks every parameter for syntax errors. (GIMAPI will stop checking a parameter if it finds an error, so GIMAPI will not report any additional errors that may exist for that parameter.) The return code value set is the one with the highest severity of the raised conditions. If more than one "highest condition" is raised, the first condition of that severity encountered is the value returned as the condition code to the calling program.

GIMAPI sets the *cc* value to zero (0) for a successful run. The *rc* value is also zero (0) in this case.

msgbuff A pointer variable that is set by GIMAPI to the head of a linked list of messages issued by the QUERY command processing. The elements of the list are ITEM_LIST structures. See section "Data Structures for QUERY Command" on page 356 for a description of that structure.

Building the QUERY Parameters Data Structure

The QUERY command parameter list must include a pointer to a data structure (*parmptr*) that defines the query to be processed. This data structure, in turn, contains pointers to character strings that specify from where data is to be retrieved (that is, which CSI, zones, and entry types) and, optionally, a list of subentries and a *filter*, which allow you to specify conditions that will be used to determine which entries are retrieved.

The following parameters are part of the structure pointed to by the *parmptr* parameter of the QUERY command. All the parameters are required except the *subentry* and *filter* parameters.

csi Input is accepted in mixed case. A character string that specifies the name of the global CSI to be searched by the QUERY command. The DDNAME used when allocating the data set is SMPCSI.

Input is accepted in mixed case. It is folded to upper case when the command is processed.

csilen A decimal number specifying the size of the character string containing the *csi* parameter. This value cannot be greater than 44.

A zero (0) value indicates that the calling program has already allocated a global CSI data set as the SMPCSI DDNAME. That allocation is used and the *csi* parameter is ignored.

zone A character string that specifies the zones from which data is to be retrieved. You may enter one or more specific zone names separated by commas or blanks, or any of these values:

GLOBAL Use the global zone

ALLTZONES Use all target zones

ALLDZONES Use all DLIB zones

***** Use all zones defined in the GLOBAL zone index

Except for the asterisk (*), these values can be used together and with specific zone names, provided that all values are separated by commas or blanks. The asterisk (*) must be used alone.

For example, these specifications are valid:

```
GLOBAL, ALLTZONES
ALLTZONES, ALLDZONES
ALLTZONES, MY1DLIB, MY2DLIB
ALLTZONES MY1DLIB, MY2DLIB
```

whereas this is not valid:

```
GLOBAL, *, ALLTZONES
```

A zone can be specified only once in the *zone* parameter. A specific DLIB zone name along with the ALLDZONES keyword or a specific target zone name along with the ALLTZONES keyword does not cause a message to be issued. However, processing for the duplicated zone names will be done only once.

Spaces can be used freely between values and commas.

Input is accepted in mixed case. It is folded to upper case when the command is processed.

The specific zone name can be a ZONESET name. The command will first check whether the name is a ZONESET. If not, it will check the ZONEINDEX.

zonelen A decimal number specifying the size of the character string containing the *zone* parameter.

entry A character string that indicates the entry types from the specified zones to be searched. You can specify one or more entries, separated by commas or blanks, or you can specify an asterisk (*) to indicate that all entries are to be searched. If an asterisk is used, no other values may be specified.

An entry can be specified only once in the *entry* parameter.

Spaces can be used freely between entry names and commas.

Input is accepted in mixed case. It is folded to upper case when the command is processed.

The entry types specified must be valid CSI entry types. Refer to “Valid Entry Types” on page 333 for a list of the valid types.

entrylen A decimal number specifying the size of the character string containing the *entry* parameter.

subentry Each CSI entry has a set of subentries associated with it. The *subentry* parameter is a pointer to a character string used to indicate the subentries for which data is retrieved. Several subentries can be specified separated by commas or blanks, or you can specify an asterisk (*) to indicate that all subentries are to be searched. If an asterisk is used, no other values may be specified.

A subentry can be specified only once in the *subentry* parameter.

Spaces can be used freely between subentry names and commas.

Input is accepted in mixed case. It is folded to upper case when the command is processed.

Note: The *entry* parameter allows multiple entries to be specified. It may be that a subentry to be returned does not apply to all

the specified entries. In this case, the subentry is simply ignored for a particular entry to which it does not apply.

Refer to “Valid Subentry Types” on page 334 for more details.

subentrylen A decimal number specifying the size of the character string containing the *subentry* parameter.

filter A character string that specifies the set of conditions with which to limit the set of entries being retrieved. A condition is in the form

```
subentry  operator  'value'
```

For example, FMID = ’HP10230’ or INSTALLDATE >= ’01203’.

Input is accepted in mixed case. The subentry types are folded to upper case when the command is processed. The fixed values are not changed.

Filter is an optional parameter. When no filtering is desired, set the length field (filterlen) to zero (0).

Refer to “Filter Parameter Syntax” for a detailed description of the syntax of the *filter* parameter.

filterlen A decimal number specifying the size of the character string containing the *filter* parameter.

Filter Parameter Syntax

The *filter* parameter is used to limit the entries returned for a particular query. You specify a filter by listing a set of conditions. These conditions specify a comparison between two values; a subentry value in the CSI is compared with a fixed value specified in the condition.

Multiple filter conditions may be specified using the operators, & (logical AND) and | (logical OR). Parentheses may be used to group search conditions to ensure a desired evaluation sequence for the filter. The parentheses, when used, may be preceded by one or more blanks and also may be followed by one or more blanks.

When a subentry name represents a list of values, such as PRE, which is a list of all the prerequisite SYSMODs, each value in the list from the CSI is compared to the fixed value. If any match, the condition is evaluated as true.

These subentry types may be specified in the *filter* parameter only with the = or != operators and a null value (for example, ASMIN=’’ or LEPARM!=’’):

- ASMIN
- HFSPARM
- HOLDDATA
- LECNTL
- LEPARM
- LMODALIAS
- LMODSYMLINK
- UTILPARM
- ZDESC

The fixed value must be enclosed within single quotes. Any set of characters may be used in the fixed value. If the fixed value is shorter than the subentry value, GIMAPI left-justifies the fixed value and pads it with blanks before doing the comparison.

Any apostrophes specified as part of a DESCRIPTION, VENDOR, or URL subentry (excluding delimiters) must be doubled. Double apostrophes count as two characters in the filter length.

Blanks may be freely used to separate the subentry, operator, and fixed value.

The values of some subentry types are lists of composite values. An example of this is the CIFREQ parameter whose value is *causer,requisite*. The fixed value for conditions containing these types of subentries must match the format of the output provided by the QUERY command. For example:

```
CIFREQ='PTF0001,PTF0002'
```

Refer to “Valid Subentry Types” on page 334 for the format of each composite subentry type.

A null value for a subentry is specified by using two quotes with no blanks between them(’’). This can be used to find all entries whose value is not blank, for example, PATH!=’’.

The operators that can be used to compare a subentry value to a fixed value, or to join a set of conditions together, are:

Operator	Function
=	Equal to
!=	Not equal to
<	Less than
<=	Less than or equal to
>	Greater than
>=	Greater than or equal to
|	Logical OR, at least one of two conditions are true
&	Logical AND, both conditions must be true

Subentry names that may appear to the left of operators are the subentries defined in “Valid Subentry Types” on page 334. Potential values for each subentry can be found in Chapter 5, ″SMP/E Data Set Entries″. When a subentry is an indicator, such as PROTECT for the DDDEF entry, its value is either YES or NO.

A requested subentry may not have a value for a particular entry. This value is considered null. This may occur for one of the following reasons:

- The subentry has not been set for the entry.
- The subentry does not apply to that entry.

An example of the latter case is a request for the SYSLIB subentry with the SYSMOD entry type. SYSMOD entries do not contain SYSLIB subentries, causing a request for such a value to always return a null value.

When the not equal sign is used with some value within a filter, for example SYSLIB!=’MACLIB’, the case where no data is found for the subentry is considered

a match, because “MACLIB” does not equal a null value. Therefore, if this filter is used when requesting the SYSMOD entry type, all the SYSMODs in the selected zones are returned. To exclude entries having no value, write the filter as (SYSLIB!='MACLIB' & SYSLIB!='').

The >, >=, < and <= operators can be used only with the subentry types that have date, time, or return code values, which are:
- HOLDDATE
- INSTALLDATE
- INSTALLTIME
- RC
- RECDATE
- RECTIME
- RESDATE
- RESTIME
- UCLDATE
- UCLTIME

The >, >=, < and <= operators have no meaning when applied to a subentry that has a null value. GIMAPI will always resolve such comparisons to “false”.

A date fixed value must use the format 'yyddd'. It must be five numeric characters. For example, specify '01365' to represent “December 31, 2001”.

A time fixed value must use the format *'hh:mm:ss'*, where *hh* is a two-digit decimal number in the range 00 through 23, and *mm* and *ss* are both two-digit decimal numbers in the range 00 through 59. (That is, in 24-hour clock format.)

The *filter* parameter is made up of a combination of these parts:
- Subentry name
- Operator
- Fixed value
- Conjunction (& or |)
- Left parenthesis
- Right parenthesis

The following list indicates for each part, what other part or parts can follow it. Any other sequence of parts is considered a syntax error.

Filter part	Can be followed by
Subentry	Operator
Operator	Fixed value
Fixed value	Conjunction, Right parenthesis, End of filter
Conjunction	Subentry Left parenthesis
Left parenthesis	Subentry, Left parenthesis
Right parenthesis	Conjunction, Right parenthesis, End of filter

Valid Entry Types

Table 8 on page 334 lists the values that are valid as *entry* parameters and the zones to which they are applicable.

Table 8. Valid entry values

Entry type	Global zone	DLIB zone	Target zone
ASSEM		Valid	Valid
Data element[1]		Valid	Valid
DDDEF	Valid	Valid	Valid
DLIB		Valid	Valid
DLIBZONE		Valid	
ELEMENT[2]		Valid	Valid
FEATURE	Valid		
FMIDSET	Valid		
GLOBALZONE	Valid		
Hierarchical file system element[3]		Valid	Valid
HOLDDATA	Valid		
LMOD		Valid	Valid
MAC		Valid	Valid
MOD		Valid	Valid
OPTIONS	Valid		
PRODUCT	Valid		
PROGRAM		Valid	Valid
SRC		Valid	Valid
SYSMOD	Valid	Valid	Valid
TARGETZONE			Valid
UTILITY	Valid		
ZONESET	Valid		

Notes:

1. The data element entry type has many possible values. Refer to ″Data Element Entry (Distribution and Target Zone)″ in Chapter 5 for the complete list. Any one of these values can be supplied as part of the *entry* parameter.
2. ELEMENT is a pseudo-entry value indicating that MOD, MAC, PROGRAM, SRC, and all data element and hierarchical file system element entries are returned.
3. The hierarchical file system element entry type has many possible values. Refer to ″Hierarchical File System Element Entry (Distribution and Target Zone)″ in Chapter 5 for the complete list. Any one of these values can be supplied as part of the *entry* parameter.

When you specify an entry that is not applicable to a particular zone, the result is simply that no data is returned. This is not an error condition.

Valid Subentry Types

For each entry type there is a set of valid subentry types that may be specified as part of the *subentry* and *filter* parameters. The following sections contain a table for each entry. Each table lists the valid subentries for that entry. The subentry types generally correspond to the types used for UCLIN processing. However, some additional types are used for GIMAPI processing (for example, the SMODTYPE

subentry of the SYSMOD entry type). This specifies what type the SYSMOD is and is used instead of having a separate subentry for each SYSMOD type.

Notes:

1. ENAME and zone name are automatically returned for each instance of an entry as part of the ENTRY structure so they do not have to be requested on the *subentry* parameter. ENAME can be used on the *filter* parameter.

   For a PRODUCT entry, ENAME has no meaning and is always blank. PRODID and VRM values are automatically returned instead of ENAME for PRODUCT entries. PRODID and VRM can be used on the *filter* parameter.
2. A maximum length of (*) indicates that a linked list of that subentry is returned to the caller. Details of the *return* structures passed back to the caller can be found in “Data Structures for QUERY Command” on page 356.

ASSEM

Table 9. Valid subentries for the ASSEM entry

Subentry Name	Maximum Length (Decimal)	Description
ASMIN	*	A linked list of records containing the assembler statements that were saved for a module during JCLIN processing. Each record may be up to 80 bytes in length.
ENAME	8	Name of the entry.
LASTUPD	7	Cause of last change to assembler entry.
LASTUPDTYPE	8	Indicates how the entry was last changed.

Data Element

Table 10. Valid subentries for the data element entries

Subentry Name	Maximum Length (Decimal)	Description
ALIAS	*	A linked list containing alias names associated with the data element. Each alias name may be up to 8 bytes in length.
DISTLIB	8	Identifies the ddname of the distribution library for the data element
ENAME	8	Name of the entry.
FMID	7	Specifies the functional owner of the data element.
LASTUPD	7	Cause of last change to this data element entry.
LASTUPDTYPE	3	Indicates how the entry was last changed.
RMID	7	Identifies the last SYSMOD that replaced this data element.
SYSLIB	8	Identifies the ddname of the target library for the data element.

DDDEF

Table 11. Valid subentries for the DDDEF entry

Subentry Name	Maximum Length (Decimal)	Description
CONCAT	*	A linked list containing the names of the DDDEF entries existing in the same zone that should be concatenated during SMP/E processing. Each entry name may be up to 8 bytes in length.
DATACLAS	8	Specifies the name of the data class to be used for allocating a new data set managed by SMS.

Table 11. Valid subentries for the DDDEF entry (continued)

Subentry Name	Maximum Length (Decimal)	Description
DATASET	44	Specifies the name of the data set to be allocated.
DIR	4	Specifies the number of directory blocks to allocate.
DISP	7	Specifies the final disposition of the data set. • CATALOG • DELETE • KEEP
DSNTYPE	7	Specifies the type of partitioned data set to be created. • LIBRARY • PDS
DSPREFIX	26	Specifies the data set prefix to be used to construct the full data set name for SMPTLIB data sets. GLOBAL zone only.
ENAME	8	Name of the entry.
INITDISP	3	Specifies the initial disposition of the data set. • MOD • NEW • OLD • SHR
MGMTCLAS	8	Specifies the name of the management class to be used for allocating a new data set managed under SMS.
PATH	255	Identifies the name of the path to be allocated in the hierarchical file system.
PROTECT	3	Indicates whether RACF PROTECT option should be used when a new data set is allocated. (YES or NO).
SPACE	9	Specifies the primary and secondary space allocation in the format *nnnn,nnnn*.
STORCLAS	8	Specifies the name of a storage class used for allocating a new data set managed by SMS.
SYSOUT	1	Specifies the output class for SYSOUT data sets.
UNIT	8	Specifies the UNIT type the data set resides on if it is not cataloged.
UNITS	12	Specifies the space units to be used in allocating the data set. • BLK(size) • CYL • TRK
VOLUME	*	A linked list containing volume serial numbers of the device the data set resides on if it is not cataloged. Each volume serial number may be up to 6 bytes in length.
WAITFORDSN	3	Indicates whether SMP/E should wait for the data set to be allocated if the volume is not mounted or if the data set is already in use. (YES or NO).

DLIB

Table 12. Valid subentries for the DLIB entry

Subentry Name	Maximum Length (Decimal)	Description
ENAME	8	Name of the entry.
LASTUPD	7	Cause of last change to DLIB entry.

Table 12. Valid subentries for the DLIB entry (continued)

Subentry Name	Maximum Length (Decimal)	Description
LASTUPDTYPE	3	Indicates how the entry was last changed.
SYSLIB	*	A linked list containing the ddnames of the target libraries into which the distribution library should be copied. Each ddname may be up to 8 bytes in length.

DLIBZONE

Table 13. Valid subentries for the DLIBZONE entry

Subentry Name	Maximum Length (Decimal)	Description
ACCJCLIN	3	Indicates whether JCLIN is to be saved in the distribution zone whenever a SYSMOD containing inline JCLIN is accepted. (YES or NO).
ENAME	8	Name of the entry.
OPTIONS	8	The name of the OPTIONS entry in the global zone that should be used when processing this distribution zone.
RELATED	7	The name of the target zone to which this distribution zone is related.
SREL	*	A linked list containing the names of the system releases supported within this distribution zone. Each name may be up to four bytes in length.
ZDESC	500	A user-written description for this zone.

FEATURE

Table 14. Valid subentries for the FEATURE entry

Subentry Name	Maximum Length (Decimal)	Description
DESCRIPTION	64	Describes the software feature in readable text.
ENAME	8	Name of the entry.
FMID	*	A linked list containing 7-byte names of function SYSMODS that make up the feature.
PRODUCT	17	The product identifier and version, release, and modification level (*prodid,vv.rr.mm*) of the feature's associated product.
RECDATE	5	Specifies the date on which this feature was received.
RECTIME	8	Specifies the time at which the ++FEATURE MCS was received.
REWORK	8	Specifies the level of this FEATURE entry, which was received again for minor changes.
UCLDATE	5	Specifies the date on which this FEATURE entry was last modified through UCLIN.
UCLTIME	8	Specifies the time at which this FEATURE entry was last modified through UCLIN.

FMIDSET

Table 15. Valid subentries for the FMIDSET entry

Subentry Name	Maximum Length (Decimal)	Description
ENAME	8	Name of the entry.
FMID	*	A linked list containing 7-byte names of the function SYSMODS (that is, FMIDs) that are to be part of this FMIDSET.

GLOBALZONE

Table 16. Valid subentries for the GLOBALZONE entry

Subentry Name	Maximum Length (Decimal)	Description
ENAME	8	Name of the entry.
FMID	*	A linked list containing 7-byte names of the function SYSMODS for which SMP/E is to receive service.
OPTIONS	8	The name of the OPTIONS entry in the global zone that should be used when processing this global zone.
SREL	*	A linked list containing the names of the system releases supported within this global zone. Each name may be up to four bytes in length.
ZDESC	500	A user-written description for this zone.
ZONEINDEX	*	A linked list of entries containing the names, data set names, and types of all the target zones and distribution zones associated with this global zone. The format of each entry is *name,dsn,type*. Each entry in the list may be up to 59 bytes in length.

Hierarchical File System Elements

Table 17. Valid subentries for hierarchical file system element entries

Subentry Name	Maximum Length (Decimal)	Description
DISTLIB	8	Specifies the DDNAME of the distribution library for the hierarchical file system element.
ENAME	8	Name of the entry.
FMID	7	Specifies the functional owner of the hierarchical file system element.
HFSPARM	300	Specifies a character string that is to be passed to the hierarchical file system copy utility as an execution-time parameter.
INSTMODE	6	Indicates the installation mode to be used when the HFS copy utility is invoked to install the element into the hierarchical file system. • BINARY • TEXT
LASTUPD	7	Cause of last change to this hierarchical file system element entry.
LASTUPDTYPE	3	Indicates how the entry was last changed.
LINK	*	A linked list containing the alternate names by which this element can be known in the hierarchical file system. Each alternate name may be up to 1023 bytes in length.
RMID	7	Identifies the last SYSMOD that replaced this hierarchical file system element.

Table 17. Valid subentries for hierarchical file system element entries (continued)

Subentry Name	Maximum Length (Decimal)	Description
SHSCRIPT	17	Specifies a shell script, along with the point in processing in which SMP/E passes control to the shell script. The format is *script_name,*PRE,POST, where PRE and POST are optional.
SYMLINK	*	A linked list containing the names of symbolic links associated with a hierarchical file system element. Each symbolic link may be up to 1023 bytes in length.
SYMPATH	*	A linked list containing the path values for symbolic links associated with a hierarchical file system element. Each path value may be up to 1023 bytes in length.
SYSLIB	8	Specifies the ddname of the target library within the hierarchical file system for the element.

HOLDDATA

Table 18. Valid subentries for the HOLDDATA entry

Subentry Name	Maximum Length (Decimal)	Description
ENAME	7	Name of the entry. This is the name of the held SYSMOD.
HOLDCLASS	7	A 1- to 7-character string indicating an alternative reason to release an exception SYSMOD for processing.
HOLDDATA	*	A linked list containing records that contain the entire HOLDDATA entry. Each record may be up to 80 bytes in length.
HOLDDATE	5	Specifies the date that the ++HOLD statement was generated.
HOLDFMID	7	Specifies the FMID to which the held SYSMOD is applicable.
HOLDREASON	7	A 1- to 7-character string used to help you identify the reason why the SYSMOD has been put into exception SYSMOD status.
HOLDTYPE	6	Specifies the hold category into which the SYSMOD has been put. ERROR, SYSTEM, or USER are the only valid values.

Refer to the ″++HOLD MCS″ section for specific details for each of the subentries listed in the HOLDDATA entry.

LMOD

Table 19. Valid subentries for the LMOD entry

Subentry Name	Maximum Length (Decimal)	Description
CALLLIBS	*	A linked list containing the names of the DDDEF entries, existing in the same zone, that compose the SYSLIB allocation to be used when the load module is link-edited. Each entry name may be up to 8 bytes in length.
COPIED	3	A special SMP/E indicator meaning that the load module was copied during system generation, and that there is a one-to-one correspondence between the distribution library module (the MOD entry) and the target system load module (the LMOD entry) (YES or NO).
ENAME	8	Name of the entry.
LASTUPD	7	Cause of last change to this LMOD entry.

Table 19. Valid subentries for the LMOD entry (continued)

Subentry Name	Maximum Length (Decimal)	Description
LASTUPDTYPE	3	Indicates how the entry was last changed.
LEPARM	*	A character string containing the link-edit attributes that must be used when this load module is link-edited. This is not a linked list.
LECNTL	*	A linked list containing records of link-edit control cards necessary to relink-edit this load module. Each record may be up to 80 bytes in length.
LMODALIAS	*	A linked list containing the names of the aliases associated with this LMOD. Each alias name may be up to 1023 bytes in length.
LMODSYMLINK	*	A linked list containing the names of symbolic links associated with a load module. The values are the values specified on **ALIAS (SYMLINK,***symlink_value***)** link-edit control statements. Each symbolic link may be up to 1023 bytes in length.
MODDEL	*	A linked list containing the names of modules that were once part of this load module, but have been deleted. Each module name may be up to 8 bytes in length.
RC	2	Highest acceptable link edit return code for this load module.
SIDEDECKLIB	8	Specifies the ddname of the library where the load module's definition side deck resides.
SYSLIB	*	A linked list containing the ddnames of the target system libraries in which this load module resides. Each ddname may be up to 8 bytes in length.
UTIN	*	a linked list containing utility input (UTIN) subentries, each of which contains the member name of the input to be included during a link edit operation, and the library ddname where the member resides. The format is *memname,ddname*. Each UTIN subentry may be up to 16 bytes in length.
XZMOD	*	A linked list containing the XZMOD subentries containing the names of the modules that were added to the load module by the LINK command. The name of the zone supplying each module is also indicated. The format is *module,zone*. Each XZMOD subentry may be up to 16 bytes in length.
XZMODP	3	Indicates whether the load module contains one or more modules from another zone and that XZMOD subentries exist in this LMOD entry. (YES or NO).

MAC

Table 20. Valid subentries for the MAC entry

Subentry Name	Maximum Length (Decimal)	Description
DISTLIB	8	Specifies the ddname of the macro distribution library.
ENAME	8	Name of the entry.
FMID	7	Specifies the functional owner of this macro.
GENASM	*	A linked list containing the names of the assemblies that have to be done during APPLY each time this macro is modified. Each name may be up to 8 bytes in length.
LASTUPD	7	Cause of last change to this MAC entry.
LASTUPDTYPE	3	Indicates how the entry was last changed.

Table 20. Valid subentries for the MAC entry (continued)

Subentry Name	Maximum Length (Decimal)	Description
MALIAS	*	A linked list containing the alias names for this macro. Each name may be up to 8 bytes in length.
RMID	7	Identifies that last SYSMOD that replaced this macro.
SYSLIB	8	Specifies the ddname of the target library for the macro.
UMID	*	A linked list containing the 7-byte names of all those SYSMODs that updated this macro since it was last replaced.

MOD

Table 21. Valid subentries for the MOD entry

Subentry Name	Maximum Length (Decimal)	Description
ASSEMBLE	3	Indicates whether the source for this module must always be assembled (YES or NO).
CSECT	*	A linked list containing the names of the CSECTs present in this module. Each name may be up to 8 bytes in length.
DALIAS	8	Specifies the alias name for the module, where the alias exists only in the distribution library.
DISTLIB	8	Specifies the ddname of the module distribution library.
ENAME	8	Name of the entry.
FMID	7	Identifies the functional owner of this module.
LASTUPD	7	Cause of last change to this MOD entry.
LASTUPDTYPE	3	Indicates how the entry was last changed.
LEPARM	*	A character string containing the link-edit attributes that must be used when this module is link-edited. This is not a linked list.
LMOD	*	A linked list containing the names of the load modules into which this module was copied or link-edited. Each name may be up to 8 bytes in length.
RMID	7	Identifies the last SYSMOD that replaced this module.
RMIDASM	3	Specifies that the last replacement (RMID) to the module was done by a SYSMOD that caused an assembly of the module as a result of a source or macro modification (YES or NO).
TALIAS	*	A linked list containing the alias names for the module, where the alias exists in the distribution library and, for copied modules, also in the target library. Each name may be up to 8 bytes in length.
UMID	*	A linked list containing 7-byte names of all those SYSMODs that have updated this module since it was last replaced.
XZLMOD	*	A linked list containing XZLMOD subentries that contain the name of each load module in another zone into which this module was added by the LINK command. The name of the zone containing each load module is also indicated. Each subentry has the format *load module,zone* and may be up to 16 bytes in length.
XZLMODP	3	Indicates whether this module has been linked into one or more load modules controlled by a different target zone, and that XZLMOD subentries exist in this MOD entry (YES or NO).

OPTIONS

Table 22. Valid subentries for the OPTIONS entry

Subentry Name	Maximum Length (Decimal)	Description
AMS	8	Specifies the name of the UTILITY entry that SMP/E is to use to obtain information when calling the Access Method Services (AMS) utility.
ASM	8	Specifies the name of the UTILITY entry that SMP/E is to use to obtain information when calling the assembler utility.
CHANGEFILE	3	Specifies whether library change file records should be created during APPLY and RESTORE processing (YES or NO)
COMP	8	Specifies the name of the UTILITY entry that SMP/E is to use to obtain information when calling the utility program to compress data sets.
COMPACT	3	Specifies whether SMPPTS members should be compacted during RECEIVE and GZONEMERGE command processing (YES or NO)
COPY	8	Specifies the name of the UTILITY entry that SMP/E is to use to obtain information when calling the copy utility.
DSPREFIX	26	Specifies the data set prefix to be used to construct the full data set name when SMPTLIB data sets are being allocated for RELFILEs.
DSSPACE	14	Specifies the primary and secondary space allocation (in tracks) and the number of directory blocks to be allocated for each SMPTLIB data set. It is in the format *primary,secondary,directory*, *nnnn,nnnn,nnnn*.
ENAME	8	Name of the entry.
EXRTYDD	*	A linked list containing ddnames ineligible for retry processing after an x37 abend. Each ddname may be up to 8 bytes in length.
HFSCOPY	8	Specifies the name of the UTILITY entry that SMP/E is to use to obtain information when calling the hierarchical file system copy utility.
IOSUP	8	Specifies the name of the UTILITY entry that SMP/E is to use to obtain information when calling the IEHIOSUP utility program to process maintenance for an OS/VS1 system.
LKED	8	Specifies the name of the UTILITY entry that SMP/E is to use to obtain information when calling the link-edit utility.
MSGFILTER	3	Specifies whether messages issued to SMPOUT should be filtered.
MSGWIDTH	7	Specifies the width in which the message issued to SMPOUT should be formatted.
NOPURGE	3	Indicates whether after SMP/E accepts SYSMODS, it should not delete the associated global zone SYSMOD entries, HOLDDATA entries, SMPPTS MCS entries, or SMPTLIB data sets (YES or NO).
NOREJECT	3	Specifies that the global zone SYSMOD entry and the associated MCS entry should not be deleted after the SYSMOD is restored. (YES or NO).
PAGELEN	4	Specifies the page length for SMPLIST, SMPOUT, and SMPRPT.
PEMAX	4	Specifies the maximum number of subentries that can be present in any CSI entry.
RECZGRP	*	A linked list containing 8-byte zone and zoneset names eligible for APPLYCHECK and ACCEPTCHECK processing during the SYSMOD selection phase of RECEIVE.
RECEXCGRP	*	A linked list containing 8-byte zone and zoneset names **not** eligible for APPLYCHECK and ACCEPTCHECK processing during the SYSMOD selection phase of RECEIVE.

Table 22. Valid subentries for the OPTIONS entry (continued)

Subentry Name	Maximum Length (Decimal)	Description
RETRY	8	Specifies the name of the UTILITY entry that SMP/E is to use to obtain information when calling the utility program to compress a data set after an x37 abend.
RETRYDDN	*	A linked list containing ddnames eligible for retry processing after an x37 abend. Each ddname may be up to 8 bytes in length.
SAVEMTS	3	Indicates whether MTSMAC entries should be deleted from the SMPMTS after the SYSMODs that affect those macros have been successfully accepted (YES or NO).
SAVESTS	3	Indicates whether STSSRC entries should be deleted from the SMPSTS after the SYSMODs that affect the source have been successfully accepted (YES or NO).
SUPPHOLD	*	A linked list containing 7-byte HOLD Reason ids for which the HOLDATA card image is not displayed in Unresolved HOLD Reason Report and Bypassed HOLD Reason Report for Apply and Accept command processing.
UPDATE	8	Specifies the name of the UTILITY entry that SMP/E is to use to obtain information when calling the update utility.
ZAP	8	Specifies the name of the UTILITY entry that SMP/E is to use to obtain information when calling the superzap utility.

PRODUCT

Table 23. Valid subentries for the PRODUCT entry

Subentry Name	Maximum Length (Decimal)	Description
DESCRIPTION	64	Specifies the name of this product.
PRODID	8	Product identifier
PRODSUP	*	A linked list containing the *prodid,vv.rr.mm* values for the products superseded by this product.
RECDATE	5	Specifies the date on which this product was received.
RECTIME	8	Specifies the time at which the ++PRODUCT MCS was received.
REWORK	8	Specifies the level of this PRODUCT, which was received again for minor changes.
SREL	*	A linked list containing 4-byte names of the system or subsystem releases on which the PRODUCT can be installed.
UCLDATE	5	Specifies the date on which this PRODUCT entry was last modified through UCLIN.
UCLTIME	8	Specifies the time at which this PRODUCT entry was last modified through UCLIN.
URL	256	Specifies a uniform resource locator (URL) that can be accessed to obtain additional information about this product.
VENDOR	64	Specifies the name of the vendor supplying the product.
VRM	8	Specifies the version, release, and modification level (*vv.rr.mm*) of this product.

Note: For a PRODUCT entry, the ENAME value is always blank, because the PRODID and VRM subentries, taken together, make up the “entry name”

normally provided by ENAME. For each PRODUCT entry satisfying the QUERY request, the PRODID and VRM subentries are returned instead of ENAME.

PROGRAM

Table 24. Valid subentries for the PROGRAM entry

Subentry Name	Maximum Length (Decimal)	Description
ALIAS	*	A linked list containing alias names associated with the program element. Each alias name may be up to 8 bytes in length.
DISTLIB	8	Identifies the ddname of the distribution library for the program element
ENAME	8	Name of the entry.
FMID	7	Specifies the functional owner of the data element.
LASTUPD	7	Cause of last change to this program element entry.
LASTUPDTYPE	3	Indicates how the entry was last changed.
RMID	7	Identifies the last SYSMOD that replaced this program element.
SYSLIB	8	Identifies the ddname of the target library for the program element.

SRC

Table 25. Valid subentries for the SRC entry

Subentry Name	Maximum Length (Decimal)	Description
DISTLIB	8	Specifies the ddname of the distribution library for the source.
ENAME	8	Name of the entry.
FMID	7	Specifies the functional owner of this source.
LASTUPD	7	Cause of last change to this SRC entry.
LASTUPDTYPE	3	Indicates how the entry was last changed.
RMID	7	Identifies that last SYSMOD that replaced this source.
SYSLIB	8	Specifies the ddname of the target library for this source.
UMID	*	A linked list containing 7-byte names of all those SYSMODs that updated this source since it was last replaced.

SYSMOD (GLOBAL zone)

Table 26. Valid subentries for the SYSMOD entry (GLOBAL Zone)

Subentry Name	Maximum Length (Decimal)	Description
ACCID	*	A linked list containing 7-byte names of the distribution zones into which the SYSMOD has been successfully accepted.
APPID	*	A linked list containing the 7-byte names of the target zones into which the SYSMOD has been successfully applied.
Data Element[1]	*	A linked list containing the names of data element replacements contained in the SYSMOD. Each name may be up to 8 bytes in length.
DELETE[2]	*	A linked list containing 7-byte names of SYSMODs deleted by this SYSMOD.
DELLMOD	3	Indicates whether the SYSMOD contained a ++DELETE statement (YES or NO).

Table 26. Valid subentries for the SYSMOD entry (GLOBAL Zone) (continued)

Subentry Name	Maximum Length (Decimal)	Description
DESCRIPTION	64	Descriptive name associated with a SYSMOD
DLMOD	*	A linked list containing the names of load modules to be deleted by ++DELETE statements contained in this SYSMOD. Each name may be up to 8 bytes in length.
ELEMENT	*	A ″pseudo-subentry″ name that refers to all element types. It is the same as individually requesting each of these elements: • All data elements • All hierarchical file system elements • MAC • MOD • PROGRAM • SRC
ELEMMOV	3	Indicates whether the SYSMOD contained a ++MOVE statement (YES or NO).
EMOVE	*	A linked list containing names of elements and load modules to be moved by the ++MOVE statements contained in this SYSMOD. Each name may be up to 8 bytes in length.
ENAME	8	Name of the entry.
ERROR	3	Indicates whether an error has occurred during the processing of this SYSMOD (YES or NO).
FEATURE	*	A linked list containing the 8-byte names of software features that contain this SYSMOD.
FESN	7	Identifies the field engineering (FE) service number.
FMID	7	Identifies the function SYSMOD to which this SYSMOD is applicable.
Hierarchical File System Element[3]	*	A linked list containing the names of hierarchical file system element replacements (++*hfs_element* statements) in the SYSMOD. Each name may be up to 8 bytes in length.
HOLDDATA	*	A linked list of the hold information associated with the SYSMOD. Each data value in the list is in the format *holdtype,reason,sysmod* with the following definitions: *holdtype* is one of the following values: • ERROR • SYSTEM(EXT) • SYSTEM(INT) • USER *reason* is the 1- to 7-character reason ID. *sysmod* is the SYSMOD ID specified on the ++HOLD.
JCLIN	3	Indicates whether this SYSMOD contained inline JCLIN (YES or NO).
MAC	*	A linked list containing the names of macro replacements (++MAC statements) in the SYSMOD. Each name may be up to 8 bytes in length.
MACUPD	*	A linked list containing the names of macro updates (++MACUPD statements) in the SYSMOD. Each name may be up to 8 bytes in length.
MOD	*	A linked list containing the names of modules replacements (++MOD statements) in the SYSMOD. Each name may be up to 8 bytes in length.

Table 26. Valid subentries for the SYSMOD entry (GLOBAL Zone) (continued)

Subentry Name	Maximum Length (Decimal)	Description
NPRE[2]	*	A linked list containing the 7-byte names of negative prerequisite SYSMODS-that is, SYSMODs that must not be present in the system at the same time as this SYSMOD.
PRE[2]	*	A linked list containing the 7-byte names of prerequisite SYSMODS-that is, SYSMODs that must be present before this SYSMOD can be installed.
PROGRAM	*	A linked list containing the names of program element replacements (++PROGRAM statements) in the SYSMOD. Each name may be up to 8 bytes in length.
RECDATE	5	Specifies the date on which this SYSMOD was received.
RECTIME	8	Specifies the time at which this SYSMOD was received.
RENLMOD	3	Indicates whether the SYSMOD contained a ++RENAME statement (YES or NO).
REQ[2]	*	A linked list containing the 7-byte names of requisite SYSMODS-that is, SYSMODs that must be installed concurrent with this SYSMOD.
REWORK	8	Identifies the level of the SYSMOD, which was received again for minor changes.
RLMOD	*	A linked list containing the names of the load modules to be renamed by ++RENAME statements in this SYSMOD. Each name may be up to 8 bytes in length.
SMODTYPE	8	Indicates the type of SYSMOD (APAR, FUNCTION, PTF, UNKNOWN, or USERMOD).
SOURCEID	*	A linked list containing the names of strings assigned to this SYSMOD during RECEIVE or CONVERT processing. Each name may be up to 8 bytes in length.
SRC	*	A linked list containing the names of source replacements (++SRC statements) in the SYSMOD. Each name may be up to 8 bytes in length.
SRCUPD	*	A linked list containing the names of source updates (++SRCUPD statements) in the SYSMOD. Each name may be up to 8 bytes in length.
SREL[2]	*	A linked list containing the names of the system or subsystem releases on which the SYSMOD can be installed. Each name may be up to four bytes in length.
SUPING[2]	*	A linked list containing the 7-byte names of SYSMODs superseded by this SYSMOD.
SZAP	*	A linked list containing the names of module superzaps (++ZAP statements) in the SYSMOD. Each name may be up to 8 bytes in length.
TLIBPREFIX	26	Specifies the high-level data set name qualifier of the SMPTLIB data sets used to receive the SYSMOD, which was packaged in RELFILEs
VERSION[2]	*	A linked list containing 7-byte names of function SYSMODs that are versioned by this SYSMOD.

Notes:

1. For the *data element* subentry, the data is returned to the caller in separate linked lists for each unique data element type requested.

2. When PRE, NPRE, REQ, DELETE, SUPING, VERSION, FMID, or SREL subentries are requested, a subentry structure of type 'VER' is returned, along with the necessary associated VER pseudo-subentries. See "VER" on page 358 for more details.
3. For the *hierarchical file system element* subentry the data is returned to the caller in separate linked lists for each unique hierarchical file system element type requested.
4. For SYSMODs that are only superseded, a value of ″UNKNOWN″ is returned for the SMODTYPE subentry.

SYSMOD

Table 27. Valid subentries for the SYSMOD entry (DLIB and Target Zones)

Subentry Name	Maximum Length (Decimal)	Description
ACCEPT	3	Indicates whether the SYSMOD has been successfully accepted (YES or NO). This subentry appears only for DLIB zones.
APPLY	3	Indicates whether the SYSMOD has been successfully applied (YES or NO). This subentry appears only for target zones.
ASSEM	*	A linked list containing the names of the assemblies done during the installation of this SYSMOD. Each name may be up to 8 bytes in length.
BYPASS	3	Indicates whether the BYPASS operand was specified when this SYSMOD was installed (YES or NO).
CIFREQ	*	A linked list of entries containing CIFREQ data that list the conditional requisites that must be installed when this function SYSMOD is installed. Each CIFREQ entry has the format *causer,requisite* and may be up to 15 bytes in length.
DELBY	7	Specifies the SYSMOD that deleted this SYSMOD.
DELETE[2]	*	A linked list containing 7-byte names of SYSMODs deleted by this SYSMOD.
DELLMOD	3	Indicates whether the SYSMOD contained a ++DELETE statement (YES or NO).
DESCRIPTION	64	Descriptive name associated with a SYSMOD
DLMOD	*	A linked list containing the names of load modules to be deleted by ++DELETE statements contained in this SYSMOD. Each name may be up to 8 bytes in length.
Data Element[1]	*	A linked list containing the 8-byte names of data element replacements contained in the SYSMOD.
ELEMENT	*	A ″pseudo-subentry″ name that refers to all element types. It is the same as individually requesting each of these elements: • All data elements • All hierarchical file system elements • MAC • MOD • PROGRAM • SRC
ELEMMOV	3	Indicates whether the SYSMOD contained a ++MOVE statement (YES or NO).
EMOVE	*	A linked list containing the names of elements and load modules to be moved by the ++MOVE statements contained in this SYSMOD. Each name may be up to 8 bytes in length.

Table 27. Valid subentries for the SYSMOD entry (DLIB and Target Zones) (continued)

Subentry Name	Maximum Length (Decimal)	Description
ENAME	8	Name of the entry.
ERROR	3	Indicates whether an error has occurred during the processing of this SYSMOD (YES or NO).
FEATURE	*	A linked list containing the 8-byte names of software features that contain this SYSMOD.
FESN	7	Identifies the field engineering (FE) service number.
FMID	7	Identifies the function SYSMOD to which this SYSMOD is applicable.
Hierarchical File System Element[3]	*	A linked list containing the names of hierarchical file system element replacements (++*hfs_element* statements) in the SYSMOD. Each name may be up to 8 bytes in length.
IFREQ	*	A linked list containing 7-byte names of conditional requisites that were installed with this SYSMOD.
INSTALLDATE	5	Specifies the date on which this SYSMOD was installed.
INSTALLTIME	8	Specifies the time at which this SYSMOD was installed.
JCLIN	3	Indicates whether this SYSMOD contained inline JCLIN (YES or NO).
LASTSUP	7	Specifies the last SYSMOD that superseded this SYSMOD.
LASTUPD	7	Cause of last change to this SYSMOD entry.
LASTUPDTYPE	3	Indicates how the entry was last changed.
MAC	*	A linked list containing the names of macro replacements (++MAC statements) in the SYSMOD. Each name may be up to 8 bytes in length.
MACUPD	*	A linked list containing the names of macro updates (++MACUPD statements) in the SYSMOD. Each name may be up to 8 bytes in length.
MOD	*	A linked list containing the names of module replacements (++MOD statements) in the SYSMOD. Each name may be up to 8 bytes in length.
NPRE[2]	*	A linked list containing the 7-byte names of negative prerequisite SYSMODS-that is, SYSMODs that must not be present in the system at the same time as this SYSMOD.
PRE[2]	*	A linked list containing the 7-byte names of prerequisite SYSMODS-that is, SYSMODs that must be present before this SYSMOD can be installed.
PROGRAM	*	A linked list containing the names of program element replacements (++PROGRAM statements) in the SYSMOD. Each name may be up to 8 bytes in length.
RECDATE	5	Specifies the date on which this SYSMOD was received.
RECTIME	8	Specifies the time at which this SYSMOD was received.
REGEN	3	Indicates how the SYSMOD was installed in the target libraries (YES or NO).
RENLMOD	3	Indicates whether the SYSMOD contained a ++RENAME statement (YES or NO).
REQ[2]	*	A linked list containing the 7-byte names of requisite SYSMODS-that is, SYSMODs that must be installed concurrent with this SYSMOD.
RESDATE	5	Specifies the date on which this SYSMOD was restored.

Table 27. Valid subentries for the SYSMOD entry (DLIB and Target Zones) (continued)

Subentry Name	Maximum Length (Decimal)	Description
RESTIME	8	Specifies the time at which this SYSMOD was restored.
RESTORE	3	Indicates whether a restore attempt has been made for this SYSMOD (YES or NO).
REWORK	8	Identifies the level of the SYSMOD, which was received again for minor changes.
RLMOD	*	A linked list containing the names of the load modules to be renamed by ++RENAME statements in this SYSMOD. Each name may be up to 8 bytes in length.
SMODTYPE	8	Indicates the type of SYSMOD (APAR, FUNCTION, PTF, UNKNOWN, or USERMOD).
SOURCEID	*	A linked list containing the names of strings assigned to this SYSMOD during RECEIVE or CONVERT processing. Each name may be up to 8 bytes in length.
SRC	*	A linked list containing the names of source replacements (++SRC statements) in the SYSMOD. Each name may be up to 8 bytes in length.
SRCUPD	*	A linked list containing the names of source updates (++SRCUPD statements) in the SYSMOD. Each name may be up to 8 bytes in length.
SUPBY	*	A linked list containing the 7-byte names of SYSMODs that superseded this SYSMOD.
SUPING[2]	*	A linked list containing the 7-byte names of SYSMODs superseded by this SYSMOD.
SZAP	*	A linked list containing the 8-byte names of module superzaps (++ZAP statements) in the SYSMOD. Each name may be up to 8 bytes in length.
UCLDATE	5	Specifies the date on which this SYSMOD was last modified through UCLIN.
UCLTIME	8	Specifies the time at which this SYSMOD was last modified through UCLIN.
VERSION[2]	*	A linked list containing 7-byte names of function SYSMODs that are versioned by this SYSMOD.
XZAP	*	A linked list containing the names of module superzaps the SYSMOD (++ZAP statements) that contain an EXPAND statement (indicating that the module should be expanded before it is updated). Each name may be up to 8 bytes in length.

Notes:

1. For the *data element* subentry, the data is returned to the caller in separate linked lists for each unique data element type requested.
2. When PRE, NPRE, REQ, DELETE, SUPING, or VERSION subentries are requested, a subentry structure of type 'VER' is returned for each unique version statement, along with its associated pseudo-subentries. See "VER" on page 358 for more details.
3. For the *hierarchical file system element* subentry the data is returned to the caller in separate linked lists for each unique hierarchical file system element type requested.

4. For SYSMODs that are only superseded, a value of ″UNKNOWN″ is returned for the SMODTYPE subentry.

TARGETZONE

Table 28. Valid subentries for the TARGETZONE entry

Subentry Name	Maximum Length (Decimal)	Description
ENAME	8	Name of the entry.
OPTIONS	8	The name of the OPTIONS entry in the global zone that should be used when processing this target zone.
RELATED	7	The name of the distribution zone to which this target zone is related.
SREL	*	A linked list containing the names of the system releases supported within this target zone. Each name may be up to four bytes in length.
TIEDTO	*	A linked list containing the names of other target zones that either supplied modules for load modules controlled by this target zone or control load modules that have been link-edited with modules supplied by this target zone. Each name may be up to 8 bytes in length.
XZLINK	9	Specifies whether APPLY and RESTORE processing in another zone should automatically update load modules in this zone when cross-zone modules previously added to those load modules by the LINK command are changed. This subentry value can contain one of these values: • DEFERRED • AUTOMATIC
ZDESC	500	A user-written description for this zone.

UTILITY

Table 29. Valid subentries for the UTILITY entry

Subentry Name	Maximum Length (Decimal)	Description
ENAME	8	Name of the entry.
LIST	3	Indicates whether member names should be listed when SMP/E invokes a copy utility to perform compress processing, retry processing, or element installation (YES or NO).
NAME	8	The name of the load module for the utility program that SMP/E is to call.
UTILPARM	100	Specifies the parameters to be passed to the utility program.
PRINT	8	Specifies the ddname that is to contain output from the utility.
RC	2	Specifies the maximum acceptable return code from this utility. This value can be from 0 to 16.

ZONESET

Table 30. Valid subentries for the ZONESET entry

Subentry Name	Maximum Length (Decimal)	Description
ENAME	8	Name of the entry.

Table 30. Valid subentries for the ZONESET entry (continued)

Subentry Name	Maximum Length (Decimal)	Description
XZREQCHK	3	Indicates whether this ZONESET should be used when establishing the default zone group for the APPLY, ACCEPT, and RESTORE commands. (YES or NO).
ZONENAME	*	A linked list containing the 7-byte names of the target or distribution zones that are to be part of this ZONESET.

QUERY Command Processing

GIMAPI checks to see if the SMPCSI DDNAME is already allocated. If it is, GIMAPI notes the data set name. GIMAPI then determines if the caller expects GIMAPI to allocate the global CSI data set. The caller indicates this by setting the *csilen* parameter to zero. The data set name previously noted is used so a shared enqueue can be done. The enqueue is to protect GIMAPI processing from updates by any other SMP/E processing that might be going on at the same time.

If the *csilen* parameter is not zero, GIMAPI verifies that the *csi* parameter provided is a valid CSI data set name.

If the SMPCSI DDNAME has already been allocated, the data set name of the allocation must be the same as the *CSI* parameter value. If they match, GIMAPI treats it as if the calling program already did the allocation. The data set is not allocated again (and is not deallocated at the end of the command).

If the CSI data set must be allocated, GIMAPI dynamically allocates the data set with DISP=SHR.

GIMAPI continues by validating the rest of the required QUERY parameters that it has received. Syntax checking is done for each QUERY parameter received. If GIMAPI encounters an error, it stops syntax checking for that parameter list and moves on to begin syntax checking for the next QUERY parameter. If any errors are found, the QUERY command terminates after syntax checking is done. The command continues if warnings are the highest severity found.

GIMAPI enforces these syntax rules:

- When multiple values are specified on the *zone, entry* or *subentry* parameters, they must be appropriately separated by commas or spaces.
- When an asterisk (*) is used on the *zone*, *entry* or *subentry* parameters, no other values can be specified.
- Entry types entered on the *entry* parameter must be a valid CSI entry type.
- A specific value can be specified only once on the *zone, entry* or *subentry* parameters.
- A condition using the >, >=, < or <= operator with a subentry type that is not a date or time field is not allowed.
- There are a set of subentry types that are not allowed to be used in conditions on the *filter* parameter. See section “Filter Parameter Syntax” on page 331 for the list.

  A null value for a subentry may be specified by using two single quotes with no other characters or blanks between them (’’). A null value may be used with the “not equal” (!=) operator to find all entries that have some value — for example, PATH!=’’.

- A date fixed value must use the format 'yyddd'. GIMAPI checks the characters entered to make sure they are all numeric.
- A time fixed value must use the format *'hh:mm:ss'*, where *hh* is a two-digit decimal number in the range 00 through 23, and *mm* and *ss* are both two-digit decimal numbers in the range 00 through 59. (That is, in 24-hour clock format.)
- A null value can be used with date and time fields with the = and != operators to check if the values have been set or not.
- A closing quote "'" must be found by the end of the *filter* parameter.
- All parentheses must be closed before the *filter* parameter string ends.
- When any other syntax errors are found in the *filter* parameter, GIMAPI issues a general syntax error message specifying the character position with the error.

Once the syntax is checked and zones other than the GLOBAL zone are specified, specific zone names are checked to see if they are ZONESETs. If so, the ZONESET name is removed from the list of zones passed by the caller and replaced with the zone names from the ZONESET. An attempt is then made to read the ZONEINDEX for each of the zones to be processed to see if any other CSI data sets need to be dynamically allocated. If one of the zones specified is not a ZONESET and cannot be found in the ZONEINDEX, the QUERY command terminates.

If any of the target zones or DLIB zones are contained in separate CSI data sets than the global CSI, those data sets must be allocated. The command first determines if they are already allocated by the calling routine. If so, that allocation is used and the data sets are not deallocated later. If not, the data sets are allocated with DISP=SHR. In either case, a shared enqueue is done.

The command now attempts to process the query. The requested entries are read from the CSI and compared with the filter. If there is a match, the requested subentries and their values are attached to the output storage. This is a set of data structures linked together, with storage being allocated for each structure used.

Once all entries are processed, any CSI data sets that were dynamically allocated are dequeued and deallocated.

Note: Any successful allocations and enqueues are undone, even if errors are found. The data sets are always freed when the program ends.

If the query requested from the calling program did not result in any data being returned, the command *output* parameter is set to zero.

QUERY Command Output

The CSI data is made up of entries, which can be thought of as record types, and subentries, which can be considered the fields within those records. Each entry has a set of subentries. Those subentry values may be a single value, such as FMID subentry of the MOD entry. Other subentries are made up of a list of values, such as the LMOD subentry of the MOD entry, which lists all the LMODs that contain the MOD. Refer to Chapter 5, "SMP/E Data Set Entries" for a complete description of the CSI entry types and their associated subentries.

The data returned from the query follows this principle in that it is organized by entries and subentries.

What is returned from the QUERY command is a pointer to storage containing the output data. The storage is a set of linked lists that describe the output as well as contain the values.

The pointer returned points to the head of a linked list of records describing each of the entry types returned from the query. The entry type structures (ENTRY_LIST) contain a 12-character name of the entry type (padded with blanks) and a pointer to a link list of entry structures (ENTRY) representing the instances of that entry type. It also contains a pointer to the next entry type record.

The entry record points to a linked list of subentry type structures (SUBENTRY) and to the next instance of that entry type. It also contains a string with the name of the entry and a string with the name of the zone where the entry was found.

Note: If no subentries are requested on the *subentry* parameter, the entry name and zone name are still returned with the entry structure, with no subentry structures attached.

The subentry type structure contains a 12-character name of the subentry type and a pointer to the value structure (ITEM_LIST), as well as a pointer to the next subentry type.

The value structure contains the length of the value, a pointer to the character string value and a pointer to the next value structure, for subentries that have lists of values.

Refer to “Data Structures for QUERY Command” on page 356 for details on the structures defined. “Example of QUERY Command” on page 354 contains pictures of what the output looks like in storage.

Some subentries are lists of values, while others are single values. There are some subentries that are composite values as well as being lists. For example, the ZONEINDEX subentry of the GLOBALZONE entry contains the zone name, the CSI data set containing the zone name, and the zone type. Subentries such as these are returned with their parts combined into one string separated by commas, as shown here:

```
TARG1,UID.TARG1.CSI,TARGET
```

The order of the parts for subentries whose values have multiple parts follow the description of that subentry in Chapter 5, ″SMP/E Data Set Entries″.

Other subentries are indicator variables. This means they do not have a value, but the fact that they do (or do not) exist in the CSI indicates something. The PROTECT subentry of the DDDEF entry is an example of this. These types of subentries will have values in the QUERY output. If the subentry exists, the value is set to ’YES’, if it does not, the value is set to ’NO ’.

If an asterisk is used in either the *entry* or *subentry* parameters, QUERY will create a complete list, internally, of the specified type (entries, subentries, or both). If all entries and subentries are requested, then a list for each type is generated. Each list will be processed as if the user had entered it from the command. The following output will result:

Table 31. Entry and Subentry Combinations/Output

ENTRY/SUBENTRY Contents	Output
• ENTRY set to * • SUBENTRY set to *	All valid subentries are returned for all instances of all valid entry types that fulfill the filter restrictions.
• ENTRY set to specific entry types • SUBENTRY set to *	All valid subentries are returned all instances of each of the specified entry types that fulfill the filter restrictions.
• ENTRY set to * • SUBENTRY set to specific subentries	The specific subentries are returned for all instances of all entry types that fulfill the filter restrictions.

Example of QUERY Command

Suppose you want to write an application that will perform the following query:

> Find all PTF and USERMOD type SYSMODs having an FMID of HMP1D00 that were received after December 1, 2001 and that were applied with BYPASS(anything). Return the SYSMOD name, the zone, the MODs that are replaced by the SYSMOD, and the installation date.

The storage containing the input parameters may be represented like this:

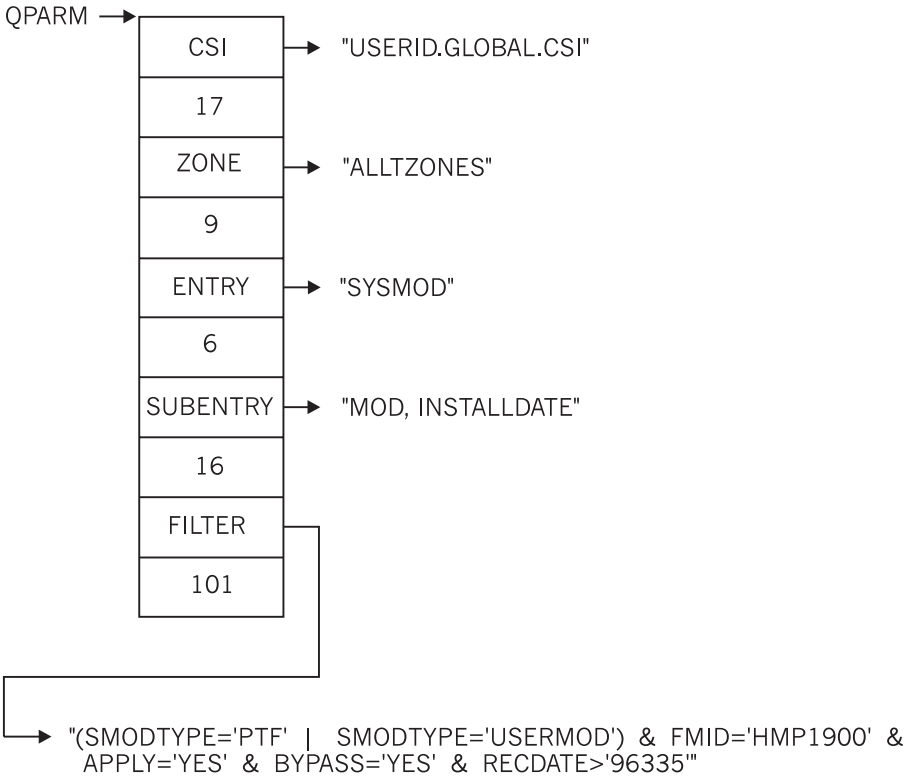

Note: The SYSMOD name and zone are automatically returned without your asking for them.

QPARM is a variable containing a pointer to a QUERY_PARMS data structure. The elements of the data structure point to strings in storage containing the values of the parameters.

Your program would then execute this call:

```
GIMAPI('QUERY',QPARM,QRESULT,'ENU',RC,CC,MSGBUFF)
```

The result of the query is two SYSMODS, SMOD019 and SMOD022. SMOD019 is in target zone TARG1 with two MODs, MOD01 and MOD02 and was installed on December 6, 2001. SMOD022 is in target zone MYTARG and has no MODs. It was installed on December 14, 2001.

Figure 63 on page 356 provides a picture of what the output storage looks like. See section “Data Structures for QUERY Command” on page 356 for a description of the data structures used in the picture.

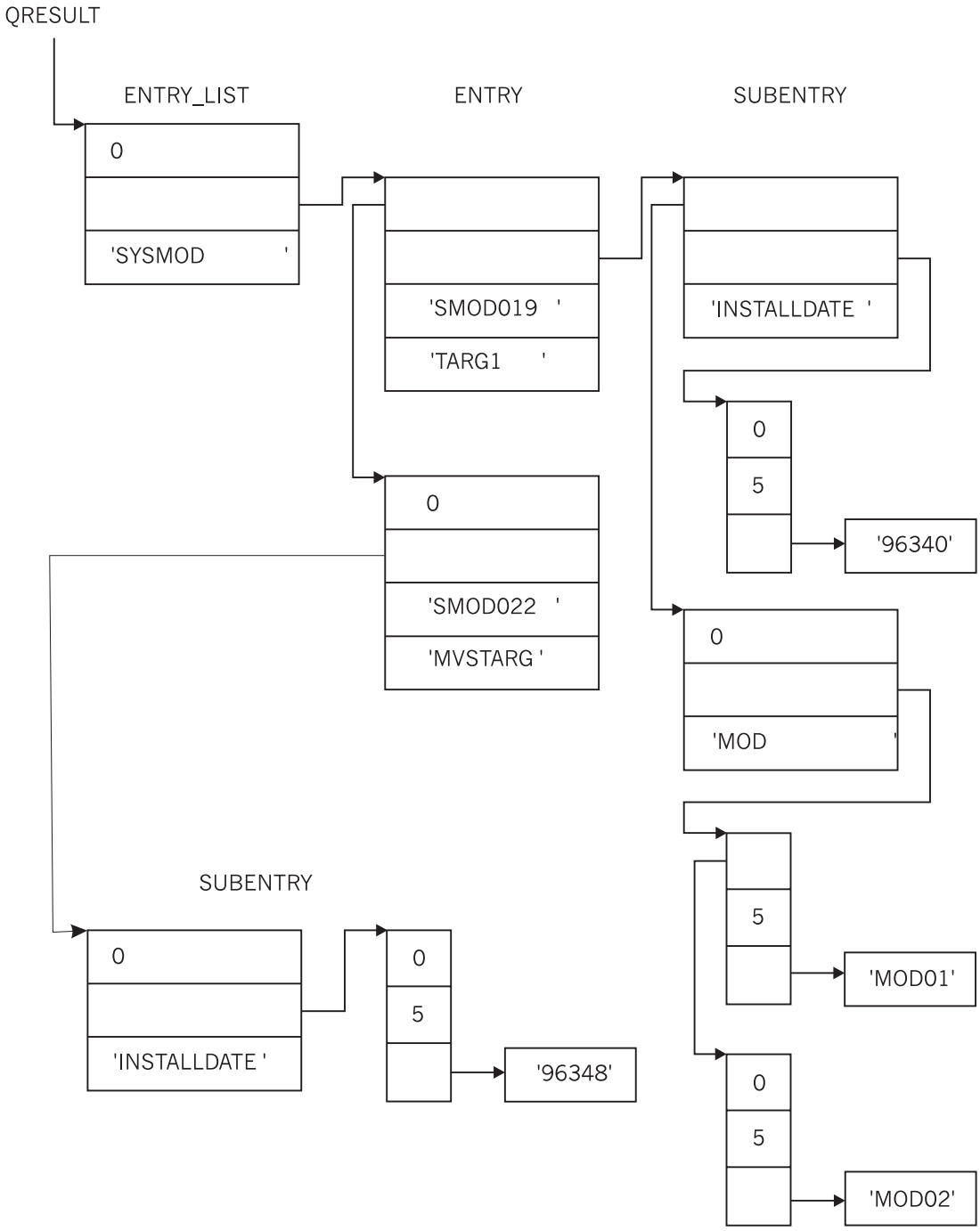

Figure 63. Picture of storage for query output

Note: There are no values for the MOD subentry for SYSMOD SMOD022. Therefore, no SUBENTRY structure is added to the output for that subentry type.

Data Structures for QUERY Command

The data structures shown in this section are defined in a language-independent format. See “Programming in C” on page 362, “Programming in PL/I” on page 364, and “Programming in Assembler” on page 366 to see the syntax of the data structures for those languages. Headers or macros with the language-specific

structure definitions are provided in members named GIMHC370 (for C/370), GIMMPLI (for PL/I), and GIMMASM (for assembler) in libraries with these DDDEFs:
MACLIB Target library
AMACLIB Distribution library

Note: The pointer and numeric values found in the tables in this section are 4-byte fields.

QUERY_PARMS

Table 32 lists the elements of the data structure used as input to the QUERY command. Only a brief description of each parameter is given here. See "QUERY Command" on page 327 for a more complete description.

Table 32. QUERY command input parameters

Element	Data Type	Description
csi	Pointer	Global CSI data set name to be searched by the query.
csilen	Numeric	Number of characters in the *csi* parameter.
zone	Pointer	Pointer to character string representing zones to search during the query.
zonelen	Numeric	Number of characters in the *zone* parameter
entrytype	Pointer	Pointer to character string representing the list of CSI entry types to be returned from the query.
entrylen	Numeric	Number of characters in the *entry* parameter
subentrytype	Pointer	Pointer to character string representing the list of subentries to be returned for each entry selected during the query.
subentrylen	Numeric	Number of characters in the *subentry* parameter
filter	Pointer	Pointer to character string representing the set of conditions used to limit the entries being returned by the query.
filterlen	Numeric	Number of characters in the *filter* parameter

ENTRY_LIST

Table 33. General SMP/E entry list structure

Element	Data Type	Description
next	Pointer	Pointer to the next entry list structure. This value is zero (0) for the last item in the list.
entries	Pointer	Pointer to a linked list of entry structures. This value is zero (0) if there are no entries.
entrytype	Character(12)	Text representation of the type of entry pointed to by the entry list structure.

ENTRY

Table 34. General SMP/E entry structure

Element	Data Type	Description
next	Pointer	Pointer to the next entry structure. This value is zero (0) for the last item in the list.
subentries	Pointer	Pointer to a linked-list of subentry structures. This value is zero (0) if there are no subentries.
entryname	Character(8)	The name of an SMP/E entry.
zonename	Character(7)	The name of an SMP/E zone.

SUBENTRY

Table 35. General SMP/E subentry structure

Element	Data Type	Description
next	Pointer	Pointer to the next subentry structure. This value is zero (0) for the last item in the list.
subentrydata	Pointer	Pointer to a linked list of item list structures. This value is zero (0) if there is no subentry data.
type	Character(12)	Text representation of the type of subentry pointed to by the subentry structure.

VER

The VER structure is used when SYSMOD entry information is requested from the GLOBAL, target, or distribution zone. More specifically, this structure is used to return information that is typically associated with a ++VER statement. Refer to the "Valid Subentry Types" on page 334 for valid subentry and pseudo-subentry specification for the SYSMOD entry.

For each request for data associated with any of the information that is contained in a ++VER statement, a VER pseudo-subentry structure is returned.

The type value in the subentry structure is set to the 12-character string 'VER' and the subentrydata pointer points to a VER pseudo-subentry structure.

For each VER pseudo-subentry returned, a linked list of subentry structures are returned.

Each subentry structure returned will be associated with one of the types of data related to a ++VER statement. In other words, the 'type' field in the subentry structure will contain one of these text strings: SREL, FMID, PRE, NPRE, REQ, DELETE, SUP, or VERSION.

Each subentry structure returned will point to an item_list structure containing the actual VER-related data.

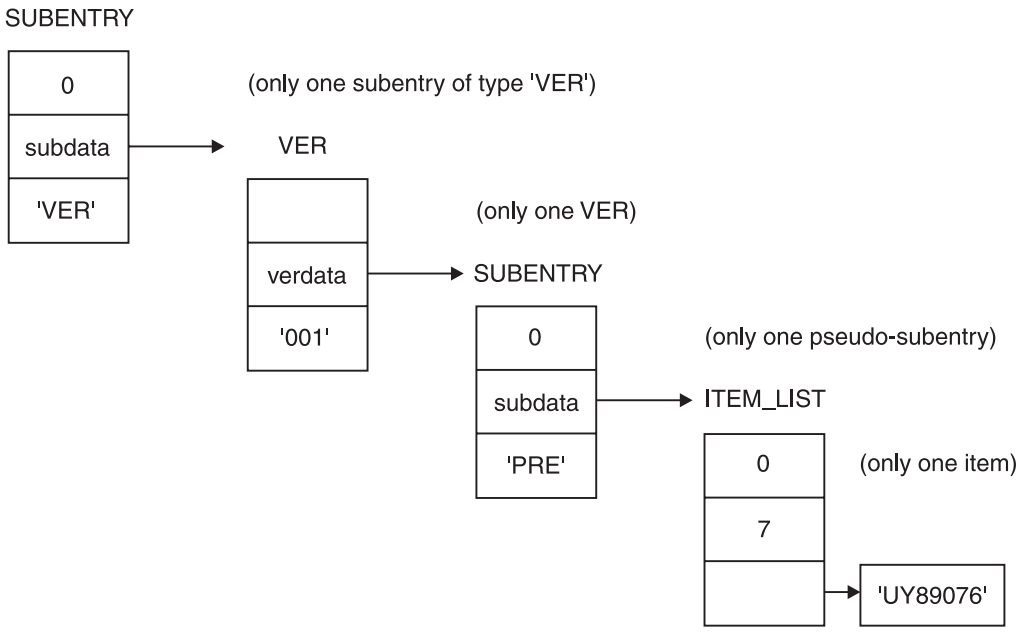

Figure 64. Illustration of VER data structure

Table 36. VER pseudo-subentry structure (GLOBAL, target, and DLIB zone)

Element	Data Type	Description
next	Pointer	Pointer to the next VER pseudo-subentry structure. This value is zero (0) for the last item in the list.
verdata	Pointer	Pointer to a linked list of subentry structures. This value is zero (0) if there is no data associated with the VER.
vernum	Character(3)	Contains the relative number of the ++VER statement when the SYSMOD was installed.

ITEM_LIST

This structure is used by many of the entry structures to hold an element in a list of subentry values attached to the entry. For example, it may contain a list of SYSMOD values, SRELs, or ALIAS names.

Table 37. Item list structure

Element	Data Type	Description
next	Pointer	Pointer to the next item in the list. This value is zero (0) when there are no more items.
datalen	Numeric	Number of characters in the item string.
data	Pointer	Pointer to the data associated with this item.

FREE Command

The FREE command frees all the storage allocated by GIMAPI for query output, message buffer, and any other data that is saved between different calls to GIMAPI. The FREE command will free storage allocated by any previous queries that has not already been freed. It is suggested that the FREE command be run after each query, but this is not required. It is good practice to use the FREE command prior to terminating the calling program.

FREE Command Parameters

Here is an example of a call to the FREE command:

```
GIMAPI('FREE    ',0,0,'ENU',rc,cc,msgbuff)
```

FREE is a keyword that specifies that GIMAPI is to process a free request. Note that it is necessary to pad the string containing the FREE command with blanks to bring it to a length of eight characters.

0,0 The *parmptr* and *outptr* parameters must both be set to zero (0) on the FREE command.

ENU The *language* parameter must be specified as either ENU, JPN, or three blanks. The FREE command does not return any messages, so it does not matter which of these choices is specified.

rc A storage area owned by the calling program representing a 4-byte numeric variable. This variable will contain the return code for the FREE command. GIMAPI will always set this variable to zero (0) after processing the FREE command.

cc A storage area owned by the calling program representing a 4-byte numeric variable. This variable will contain the condition code for the FREE command. GIMAPI will always set this variable to zero (0) after processing the FREE command.

msgbuff A pointer variable. No messages are issued by the FREE command, but this pointer variable must be passed to GIMAPI.

Note that the *parmptr*, *outptr*, *language*, *rc*, *cc*, and *msgbuff* parameters must all must be specified on the GIMAPI call, even though none of these parameters are used by the FREE command.

FREE Command Processing

The FREE command frees any storage obtained by GIMAPI on previous QUERY requests made by this caller.

VERSION Command

The VERSION command is used to query the version of GIMAPI module being accessed by the calling program.

The version is returned as 8 bytes worth of data representing the current version of SMP/E in the format *vvrrmmpp*, where:

vv version
rr release
mm modification level
pp PTF

The version of IBM SMP/E for z/OS and OS/390, V3R1 is displayed as 31.00. This translates to an 8 byte value of ″03010000″.

VERSION Command Parameters

Here is an example of a call to the VERSION command:

```
GIMAPI('VERSION',0,verout,'ENU',rc,cc,msgbuff)
```

No input parameters are defined for this command. A parameter passed to GIMAPI for this command would be ignored.

The output is a pointer to an API_VERSION structure containing the version of the current running GIMAPI module. Refer to

VERSION Command Processing

GIMAPI allocates the storage for AN API_VERSION structure. If the storage cannot be allocated, existing message GIM30700E is issued and the module terminates.

If allocation was successful, GIMAPI sets the elements of the structure with the values of the current version, release, modification and PTF level then returns to the calling program.

For example, the level of IBM SMP/E for z/OS and OS/390, V3R1 is 31.00. As the result of a call to GIMAPI with the VERSION command, the elements of the API_VERSION structure are set as follows:

```
apiver="03"
apirel="01"
apimod="00"
apiptf="00"
```

The version can be accessed by the user as the complete string, ″03010000″ or as the previously listed individual parts.

The calling program needs to issue the FREE command at some point after calling the VERSION command.

VERSION Command Output

The data structure shown in this section are defined in a language independent format. See “Programming in C” on page 362, “Programming in PL/I” on page 364, and “Programming in Assembler” on page 366 to see the syntax of the data structures for those languages. Headers or macros with the language-specific structure definitions are provided in members named GIMHC370 (for C/370), GIMMPLI (for PL/I), and GIMMASM (for assembler) in libraries with these DDDEFs:

MACLIB Target Library
AMACLIB Distribution Library

Table 38. API Version

Element	Data Type	Description
apiver	Character(2)	A 2-digit character string representing the version of the API. Leading zeros are included.
apirel	Character(2)	A 2-digit character string representing the release of the API. Leading zeros are included.
apimod	Character(2)	A 2-digit character string representing the modification of the API. Leading zeros are included.

Table 38. API Version (continued)

Element	Data Type	Description
apiptf	Character(2)	A 2-digit character string representing the PTF associated with the API. Leading zeros are included.

Programming in C

For GIMAPI to be invoked from a C/370 program, GIMAPI must first be loaded into storage. The calling program must identify the parameter linkage as standard OS linkage and must declare the routine. Figure 65 shows the statements to load and unload the module, the #pragma statement that identifies the linkage, the function declaration, and the calling syntax.

```
   typedef  void  APIPGM();
   typedef  void  CFUNC();
   #pragma  linkage(APIPGM,OS)

:
   APIPGM  *  gimapi;
   gimapi  =  (APIPGM  *)  fetch(″GIMAPI″);

:
   (*gimapi)  (apicmd,&parmptr,&outptr,language,&rc,&cc,&msgbuff);

:
   release((CFUNC*)  gimapi)
```

Figure 65. C syntax of GIMAPI invocation

The FETCH must be done once, then GIMAPI can be invoked any number of times before it is released. The release function requires a pointer to a C function as its parameter. APIPGM becomes an OS program. The typedef of CFUNC is used to cast the *gimapi* parameter so the program compiles correctly.

apicmd The *apicmd* parameter is a string of length 8 that contains the name of the command to be passed to GIMAPI.

&parmptr A *qparm* variable is declared of type QUERY_PARMS. The *parmptr* pointer variable is set to the address of the query parameter structure. The address of the pointer variable is passed to GIMAPI.

&outptr The *outptr* variable is a pointer variable that will be set to the address of the beginning of storage containing the output of the command processing. The address of *outptr* is passed to GIMAPI.

language A character string of length 3 to indicate the language to use for messaging by GIMAPI. Valid values are ENU and JPN.

&rc Address of a variable defined as *long* to be set to the command's return code by GIMAPI.

&cc Address of a variable defined as *long* to be set to the command's condition code by GIMAPI.

&msgbuff The msgbuff variable is a pointer variable that is set to the head of a linked list of messages that could be created by GIMAPI

processing. The elements to the link list are ITEM_LIST structures. The address of the pointer variable is passed to GIMAPI.

Data Structures in C

Many of the structures contain character string data. The strings are not null terminated.

A header file will be provided in the MACLIB library. The member name for C/370 is GIMHC370.

QUERY_PARMS

```
typedef _Packed struct QUERY_PARMS
{
  char    *csi;
  long    csilen;
  char    *zone;
  long    zonelen;
  char    *entrytype;
  long    entrylen;
  char    *subentrytype;
  long    subentrylen;
  char    *filter;
  long    filterlen;
} QUERY_PARMS, * P_QUERY_PARMS;
```

API_VERSION

```
typedef _Packed struct API_Version
{
  char  apiver[2];
  char  apirel[2];
  char  apimod[2];
  char  apiptf[2];
} API_VERSION, * P_API_VERSION;
```

ENTRY

```
typedef _Packed struct CSI_ENTRY
{
  _Packed struct CSI_ENTRY  *next;
  _Packed struct SUBENTRY   *subentries;
  char                      entryname[8];
  char                      zonename[7];
} CSI_ENTRY, * P_CSI_ENTRY;
```

ENTRY_LIST

```
typedef _Packed struct ENTRY_LIST
{
  _Packed struct ENTRY_LIST *next;
  _Packed struct CSI_ENTRY  *entries;
  char                      type[12];
} ENTRY_LIST, * P_ENTRY_LIST;
```

ITEM_LIST

```
typedef _Packed struct ITEM_LIST
{
  _Packed struct ITEM_LIST  *next;
  long                      datalen;
  char                      *data;
} ITEM_LIST, * P_ITEM_LIST;
```

SUBENTRY

```
typedef _Packed struct SUBENTRY
{
  _Packed struct SUBENTRY   *next;
  void                      *subentrydata;
  char                      type[12];
} SUBENTRY, * P_SUBENTRY;
```

Note: Given that C requires pointers to indicate the data type they will point to, a void pointer must be used here since more than one structure may be attached, the ITEM_LIST or the VER structure.

VER

```
typedef _Packed struct VER
{
  _Packed struct VER        *next;
  _Packed struct SUBENTRY   *verdata;
  char                      vernum[3];
} VER, * P_VER;
```

Programming in PL/I

Before the GIMAPI program can be invoked from a PL/I program, it must be declared. This identifies the variable as a callable routine and indicates to PL/I that standard OS linkage is used to pass parameters. The program must be loaded into storage before it can be invoked. The declaration, linkage, load and call syntax are shown in Figure 66.

```
   DECLARE GIMAPI(CHAR(8), PTR, PTR, CHAR(3), FIXED, FIXED, PTR)
     ENTRY OPTIONS(ASSEMBLER INTER);

.
.
.
   FETCH GIMAPI;
   CALL GIMAPI(APICMD,PARMPTR,OUTPTR,LANGUAGE,RC,CC,MSGBUFF);

.
.
.
   RELEASE GIMAPI;
```

Figure 66. PL/I syntax of GIMAPI invocation

The FETCH must be done once, then GIMAPI can be invoked any number of times before it is released.

APICMD A variable defined as CHAR(8) that contains the string representing the command GIMAPI is to process.

PARMPTR A command parameter structure (QUERY_PARMS) that contains the parameters of the command being processed is declared in the calling program. PARMPTR is a pointer variable that contains the address of that structure. The variable is passed to GIMAPI.

OUTPTR A pointer variable that will be set to the address of the beginning of storage containing the output of the command processing.

LANGUAGE 3-character national language identifier to use for messages. Valid values are ENU and JPN.

RC A return code variable declared as FIXED BIN(31). The value of the variable is set to the return code of GIMAPI call by GIMAPI program.

CCPTR A condition code variable declared as FIXED BIN(31). The value of the variable is set to the condition code of GIMAPI call by GIMAPI program.

MSGBUFF The MSGBUFF variable is a pointer variable that is set to the head of a linked list of messages that could be created by GIMAPI processing. The elements to the link list are ITEM_LIST structures.

Data Structures in PL/I

This section shows the data structures defined in "Data Structures for QUERY Command" on page 356 as they would appear in PL/I. The calling program must declare all the structures it is going to use before calling GIMAPI.

The data structures defined for the entries are BASED variables. This means no storage is allocated for the variables, but they are used to reference data allocated by the GIMAPI command. The calling program must declare pointer variables to reference the storage.

A macro file for PL/I is provided in member GIMMPLI of the MACLIB library.

QUERY_PARMS

```
DECLARE
 1 QUERY_PARMS UNALIGNED,
    2 CSI              POINTER,
    2 CSILEN           FIXED BIN(31),
    2 ZONE             POINTER,
    2 ZONELEN          FIXED BIN(31),
    2 ENTRYTYPE        POINTER,
    2 ENTRYLEN         FIXED BIN(31),
    2 SUBENTRYTYPE     POINTER,
    2 SUBENTRYLEN      FIXED BIN(31),
    2 FILTER           POINTER,
    2 FILTERLEN        FIXED BIN(31);
```

API_VERSION

```
DECLARE
  1 API_VERSION BASED UNALIGNED,
    2 APIVER           CHAR(2),
    2 APIREL           CHAR(2),
    2 APIMOD           CHAR(2),
    2 APIPTF           CHAR(2);
```

ENTRY

```
DECLARE
 1 CSI_ENTRY BASED UNALIGNED,
    2 NEXT             POINTER,
    2 SUBENTRIES       POINTER,
    2 ENTRYNAME        CHAR(8),
    2 ZONENAME         CHAR(7);
```

ENTRY_LIST

```
DECLARE
 1 ENTRY_LIST BASED UNALIGNED,
    2 NEXT             POINTER,
    2 ENTRIES          POINTER,
    2 TYPE             CHAR(12);
```

ITEM_LIST

```
DECLARE
 1 ITEM_LIST BASED UNALIGNED,
    2 NEXT             POINTER,
    2 DATALEN          FIXED BIN(31),
    2 DATA             POINTER;
```

SUBENTRY

```
DECLARE
 1 SUBENTRY BASED UNALIGNED,
    2 NEXT             POINTER,
    2 SUBENTRYDATA     POINTER,
    2 TYPE             CHAR(12);
```

VER

```
DECLARE
 1 VER BASED UNALIGNED,
    2 NEXT             POINTER,
    2 VERDATA          POINTER,
    2 VERNUM           CHAR(3);
```

Programming in Assembler

Before the GIMAPI program can be invoked from an assembler program, the load module must be brought into virtual storage using the LOAD macro. It can then be invoked using the CALL macro passing the required parameters. An example of the declares, LOAD, CALL and FREE syntax are shown in Figure 67.

```
                LA    2,APIPGM
          LOAD EPLOC=(2),LOADPT=PGMADR

          L     15,PGMADR
          CALL (15),(QUERYCMD,QUERY_PARMS@,CMDOUT,APILANG,RC,CC,MSG@)

          L     15,PGMADR
          CALL (15),(FREECMD,0,CMDOUT,APILANG,RC,CC,MSG@)

APIPGM   DC     CL8'GIMAPI  '
QUERYCMD DC     CL8'QUERY   '
FREECMD  DC     CL8'FREE    '
APILANG  DC     CL3'ENU'
         DS     0F
QUERY_PARMS@ DC AL4(QUERY_PARMS)
PGMADR   DC     AL4(0)
CMDOUT   DC     AL4(0)
MSG@     DC     AL4(0)
RC       DS     F'0'
CC       DS     F'0'
```

Figure 67. Assembler syntax of GIMAPI invocation

QUERYCMD A variable defined as CHAR(8) that contains the string representing the QUERY command GIMAPI is to process.

FREECMD A variable defined as CHAR(8) that contains the string representing the FREE command GIMAPI is to process.

QUERY_PARMS@ A command parameter structure (QUERY_PARMS) that contains the parameters of the command being processed is declared in the calling program.

QUERY_PARMS@ is a pointer variable that contains the address of that structure. The variable is passed to GIMAPI.

CMDOUT A pointer variable that will be set to the address of the beginning of storage containing the output of the command processing.

APILANGE 3-character national language identifier to use for messages. Valid values are ENU and JPN.

RC A return code variable declared as a fullword. The value of the variable is set to the return code of GIMAPI call by GIMAPI program.

CC A condition code variable declared as a fullword. The value of the variable is set to the condition code of GIMAPI call by GIMAPI program.

MSG@ The MSG@ variable is an address variable that is set to the head of a linked list of messages that could be created by GIMAPI processing. The elements to the link list are ITEM_LIST structures.

Data Structures in Assembler

This section shows the data structures defined in “Data Structures for QUERY Command” on page 356 as they would appear in assembler. The calling program must declare all the structures it is going to use before calling GIMAPI.

The data structures defined for the entries are DSECTS. This means no storage is allocated for the variables, but they are used to reference data allocated by the GIMAPI command. The calling program must declare address variables to reference the storage.

A macro file for assembler code is provided in member GIMMASM of the MACLIB library.

QUERY_PARMS

```
QUERY_PARMS DS 0CL40        PARAMETERS FOR QUERY COMMAND
PCSI        DS AL4          PTR TO GLOBAL CSI DATASET
CSILEN      DS FL4          LENGTH OF DATA SET NAME
PZONE       DS AL4          PTR TO LIST OF ZONES
ZONELEN     DS FL4          LENGTH OF ZONE LIST
PENTRY      DS AL4          PTR TO LIST OF ENTRIES
ENTRYLEN    DS FL4          LENGTH OF ENTRY LIST
PSUBENTRY   DS AL4          PTR TO LIST OF SUBENTRIES
SUBENTRYLEN DS FL4          LENGTH OF SUBENTRY LIST
PFILTER     DS AL4          PTR TO QUERY FILTER
FILTERLEN   DS FL4          LENGTH OF FILTER
```

ENTRY_LIST

```
ENTRY_LIST  DSECT           LIST OF ENTRY TYPES
NEXT        DS AL4          PTR TO NEXT ITEM IN LINKED LIST
ENTRIES     DS AL4          PTR TO HEAD OF LINKED LIST OF
*                             CSIENTRY STRUCTURES LISTING THE
*                             INSTANCES OF THIS ENTRY TYPE
TYPE        DS CL12         ENTRY TYPE
```

ENTRY

```
CSIENTRY    DSECT          DESCRIPTION OF A SPECIFIC ENTRY
CSINEXT     DS AL4         PTR TO NEXT ITEM IN LINKED LIST
SUBENTRIES  DS AL4         PTR TO HEAD OF LINKED LIST OF
*                          SUBENTRY STRUCTURES LISTING THE
*                          SUBENTRY VALUES RETURNED FOR
*                             THIS ENTRY
ENTRYNAME   DS CL8         NAME OF ENTRY
ZONENAME    DS CL7         ZONE WHERE ENTRY WAS RETRIEVED
```

SUBENTRY

```
SUBENTRY    DSECT          CONTAINS SUBENTRY DATA
SUBNEXT     DS AL4         PTR TO NEXT ITEM IN LINKED LIST
SUBENTDATA  DS AL4         PTR TO HEAD OF LINKED LIST OF
*                            DATA VALUES FOR THIS SUBENTRY
SUBTYPE     DS CL12        SUBENTRY TYPE
```

VER

```
VER         DSECT          PLACEHOLDER FOR SUBENTRIES
*                            ASSOCIATED WITH ++VER RECORDS
*                            OF A SYSMOD
VERNEXT     DS AL4         PTR TO NEXT ITEM IN LINKED LIST
VERDATA     DS AL4         PTR TO HEAD OF LINKED LIST OF
*                            SUBENTRIES ASSOC WITH A ++VER
VERNUM      DS CL3         ++VER STATEMENT NUMBER
```

ITEM_LIST

```
ITEM_LIST   DSECT          HOLDS PIECE OF SUBENTRY DATA
ITMNEXT     DS AL4         PTR TO NEXT ITEM IN LINKED LIST
DATALEN     DS FL4         NUMBER OF CHARS OF REAL DATA
DATA        DS AL3         PTR TO STORAGE CONTAINING DATA
```

API_VERSION

```
API_VERSION DSECT          API VERSION COMMAND OUTPUT
APIVER      DS CL2             STRUCTURE
APIREL      DS CL2         CURRENT SMP/E LEVEL FOR VERSION
APIMOD      DS CL2             "            "   RELEASE
APIPTF      DS CL2             "            "   MODIFICAT
```

Additional Programming Considerations

GIMAPI is installed in SYS1.LINKLIB and SYS1.MIGLIB with the GIMSMP module. Because GIMAPI resides in LINKLIB, which is considered an authorized library, GIMAPI is available to both authorized and unauthorized callers.

The GIMAPI load module cannot be reused. A new copy must be brought into virtual storage for each use. Each task must load its own copy of GIMAPI. However, a single task can load GIMAPI once and then call GIMAPI several times before deleting GIMAPI.

GIMAPI runs in AMODE 31. It will obtain storage from either above or below the 16MB line, based on the AMODE of the caller upon entry to GIMAPI.

GIMAPI will not provide an ESTAE environment. If an ESTAE environment is required, the calling program must establish it before invoking GIMAPI.

Callers of GIMAPI should not link-edit a copy of the load module into the application program. GIMAPI should be called as an external routine.

The caller of GIMAPI must first load the GIMAPI load module into virtual storage using the appropriate syntax for the language in which the application is written. For example, an assembler application may use the LOAD or LINK macros. Once the GIMAPI module is loaded into virtual storage, it can be called by the application.

The caller of GIMAPI must adhere to standard linkage conventions. For more information regarding standard linkage conventions, refer to *z/OS MVS Programming: Assembler Services Guide* and the appropriate documentation for the language you are using for your application.

GIMAPI can only be invoked from a user-written program. GIMAPI cannot be invoked from JCL.

GIMAPI exposes certain control blocks to the user. These are the data structures defined in section “Data Structures for QUERY Command” on page 356. A macro data set is provided for you to include the definition of the control blocks in your program. The DDDEF of the macro library is MACLIB for the target library and AMACLIB for the distribution library. Refer to “Programming in C” on page 362, “Programming in PL/I” on page 364, and “Programming in Assembler” on page 366 for the member names used for each language.

Sample Programs That Use GIMAPI

This section contains three sample programs that use GIMAPI. Each program does the same basic function, where differences are mostly due to the syntax of the languages involved.

Note: In addition to the programs documented here, SYS1.SAMPLIB provides other sample programs that use GIMAPI, such as GIMCRSAM and GIMPRSAM.

Each program follows these steps:

1. The query described in “Example of QUERY Command” on page 354 is set up to be invoked. The global CSI data set used is ’SMP.VSAM.CSI’.
2. GIMAPI is called with the QUERY command to retrieve the data.
3. If the query is successful, it calls a generic result print function that prints the data retrieved from any query.
4. Once these are done, the storage is freed by calling GIMAPI with the FREE command.

The following is an example of the output of the sample programs:

```
Entry Type: SYSMOD
----------------------------------------
  ENAME       : SMOD19
  ZONE        : TARG1
  INSTALLDATE : 01340
  MOD         : MOD01
                MOD02
----------------------------------------
  ENAME       : SMOD22
  ZONE        : MYTARG
  INSTALLDATE : 01348
```

Sample C/370 Program

This sample program can be found in the SAMPLIB library as member name GIMCSAMP.

```
#include <stdio.h>
#include <stdlib.h>
#include <DD:SYSLIB(GIMHC370)> /* Contains API structure definitions */

#define FREE      "FREE    "
#define QUERY     "QUERY   "
#define APILANG   "ENU"
#define TXT_VER   "VER"
#define LEN_ETYPE        12
#define LEN_ENAME         8
#define LEN_ZNAME         7
#define LEN_VERNUM        3
#define LEN_TXTVER        3
#define LEN_MSG         256
typedef void APIPGM();
typedef void cfunc();
#pragma linkage(APIPGM,OS)

static void errprint(char *, long, long, ITEM_LIST *);
static void valprint(ITEM_LIST *);
static void resprint(ENTRY_LIST *);

void main(int argc, char *argv[])
{
  long  rc,cc;
  QUERY_PARMS qparms;
  P_QUERY_PARMS pqparms = &qparms;
  ENTRY_LIST  *qreslt;
  ITEM_LIST   *msgbuff;
  APIPGM      *gimapi;

  char csi[45];
  char zone[100];
  char ent[100];
  char subent[100];
  char filter[150];

  rc = 0;
  cc = 0;

 /***********************************************/
 /* Load the GIMAPI load module for use later   */
 /***********************************************/
 gimapi = (APIPGM *) fetch("GIMAPI");

 /*****************************************************/
 /* Create the QUERY. Put the parameter strings into  */
 /* variables and put the addresses of those variables*/
 /* in the query parameter structure along with the   */
 /* length of those strings.                          */
 /*****************************************************/
 strcpy(csi,"SMP.VSAM.CSI");
 strcpy(zone,"ALLTZONES");
 strcpy(ent,"SYSMOD");
 strcpy(subent,"MOD,INSTALLDATE");
 strcpy(filter,"(SMODTYPE='PTF' | SMODTYPE='USERMOD')");
 strcat(filter," & FMID='HMP1D00' & APPLY='YES'");
 strcat(filter," & BYPASS='YES' & RECDATE>'01335'");

 qparms.csi          = csi;
 qparms.csilen       = strlen(csi);
 qparms.zone         = zone;
 qparms.zonelen      = strlen(zone);
 qparms.entrytype    = ent;
 qparms.entrylen     = strlen(ent);
 qparms.subentrytype = subent;
 qparms.subentrylen  = strlen(subent);
```

```
 qparms.filter       = filter;
 qparms.filterlen    = strlen(filter);

 gimapi(QUERY,&pqparms,(void**) &qreslt,APILANG,&rc,&cc,&msgbuff);

 if (rc!=0)
 {
   errprint(QUERY, rc, cc, msgbuff);
   if (rc>4) goto EXIT;
 }

 /*****************************************/
 /* Call routine to print results of query */
 /*****************************************/
 resprint(qreslt);

 /****************************************/
 /* Free storage returned from the QUERY */
 /****************************************/
 gimapi(FREE,0,0,APILANG,&rc,&cc,&msgbuff);

EXIT:

  release ((cfunc*)gimapi);
 }

 /*******************************/
 /* Print results of the query */
 /*******************************/
 static void resprint(ENTRY_LIST *head)
 {
  ENTRY_LIST  *curetype;
  CSI_ENTRY   *curentry;
  SUBENTRY    *cursubent;
  VER         *curver;
  SUBENTRY    *curversub;
  char        etype[13];
  char        vernumber[13];
  char        versubtype[13];
  char        stEname[LEN_ENAME+1];
  char        stZname[LEN_ZNAME+1];

  /********************************/
  /* Loop through each entry type */
  /********************************/
  for (curetype=head; curetype!=0 ; curetype=curetype->next)
  {
    /*********************************************/
    /* Print name of entry type being processed */
    /*********************************************/
    strncpy(etype,curetype->type,LEN_ETYPE);
    etype[LEN_ETYPE] = '\0';
    printf("Entry Type: %s\n",etype);

    /*********************************************************/
    /* Loop through each entry printing the ename and zone  */
    /* then the list of subentry values.                    */
    /*********************************************************/
    for (curentry=curetype->entries;
         curentry!=0;
         curentry=curentry->next)
    {
      printf("---------------------------------------\n");
      strncpy(stEname,curentry->entryname,LEN_ENAME);
      stEname[LEN_ENAME]='\0';
      strncpy(stZname,curentry->zonename,LEN_ZNAME);
      stZname[LEN_ZNAME]='\0';
```

```
      printf("  ENAME           : %s\n",stEname);
      printf("  ZONE            : %s\n",stZname);
      for (cursubent=curentry->subentries;
           cursubent!=0;
           cursubent=cursubent->next)
      {
        strncpy(etype,cursubent->type,LEN_ETYPE);
        etype[LEN_ETYPE] = '\0';
        if ((strncmp(etype,TXT_VER,LEN_TXTVER)) == 0)
        {
          for (curver=(P_VER) cursubent->subentrydata;
               curver!=0;
               curver=curver->next)
          {
            strncpy(vernumber,curver->vernum,LEN_VERNUM);
            vernumber[LEN_VERNUM]='\0';
            for (curversub=curver->verdata;
                 curversub!=0;
                 curversub=curversub->next)
            {

              /*********************************/
              /* Now print ver subentry values */
              /*********************************/
              strncpy(versubtype,curversub->type,LEN_ETYPE);
              versubtype[LEN_ETYPE]='\0';
              printf("  %.6s  VER(%s): ",versubtype,vernumber);
              valprint(curversub->subentrydata);
            }
          }
        } /* end ver subentry */
        else /* not a ver structure */
        {
          printf("  %s    : ",etype);
          valprint(cursubent->subentrydata);
        } /* end non-ver subentry */
      } /* end subentry for */
    } /* end entries for */
  } /* end entry type for */
}

static void valprint(ITEM_LIST *item1)
{
  char        databuff[500];
  ITEM_LIST   *curitem;

  for (curitem=item1;
       curitem!=0;
       curitem=curitem->next)
  {
    strncpy(databuff,curitem->data,curitem->datalen);
    databuff[curitem->datalen] = '\0';
    printf("%s\n",databuff);
    if (curitem->next!=0)
      printf("\n                   ");
  } /* end item for */
}

static void errprint(char *cmd, long rc, long cc, ITEM_LIST *msgs)
{
  char   msgout[LEN_MSG+1];
  ITEM_LIST *curmsg;
  unsigned short i;

  printf("Error processing command: %s. RC=%d CC=%d\n",
    cmd,rc,cc);
  printf("Messages follow:\n");
```

```
  /*************************************************/
  /* Loop through a linked list of error messages  */
  /* printing them out.                            */
  /*************************************************/
  for (curmsg=msgs; curmsg!=0; curmsg=curmsg->next)
  {
    strncpy(msgout,curmsg->data,curmsg->datalen);
    msgout[curmsg->datalen] = '\0';
    printf("%s\n",msgout);
  }
}
```

Sample PL/I Program

This sample program can be found in the SAMPLIB library as member name GIMPSAMP.

```
MAIN:
 PROC OPTIONS(MAIN) REORDER;

%INCLUDE GIMMPLI;

DCL QUERY CHAR(8)  INIT('QUERY');
DCL FREE  CHAR(8)  INIT('FREE');
DCL TXT_VER   CHAR(12) INIT('VER');
DCL APILANG CHAR(3) INIT('ENU');

DCL GIMAPI ENTRY(CHAR(8),PTR,PTR,CHAR(3),FIXED BIN(31),
                FIXED BIN(31),PTR)
               EXTERNAL OPTIONS(ASSEMBLER,INTER);

DCL SYSNULL BUILTIN;
DCL ADDR    BUILTIN;
DCL SUBSTR  BUILTIN;

DCL (RC,CC) FIXED BIN(31) INIT(0);

DCL QPARMS POINTER;
DCL MSGBUFF  POINTER;

DCL QRESULT POINTER;
DCL NULLPTR POINTER;

DCL CSISTR     CHAR(44);
DCL ZONESTR    CHAR(100);
DCL ENTRYSTR   CHAR(100);
DCL SUBENTSTR  CHAR(100);
DCL FILTERSTR  CHAR(150);
/*******************************************************************/
/*                                                                 */
/*  SET ADDRESS OF QUERY PARAMETERS TO THE QPARMS VAR              */
/*                                                                 */
/*******************************************************************/

QPARMS = ADDR(QUERY_PARMS);

/*******************************************************************/
/*                                                                 */
/*  LOAD GIMAPI LOAD MODULE                                        */
/*                                                                 */
/*******************************************************************/

FETCH GIMAPI;

/*******************************************************************/
/*                                                                 */
/*  PLUG QUERY PARMS INTO THE QUERY STRUCTURE                      */
```

```
/*                                                                  */
/*******************************************************************/
CSISTR    = 'SMP.VSAM.CSI';
ZONESTR   = 'ALLTZONES';
ENTRYSTR  = 'SYSMOD';
SUBENTSTR = 'MOD, INSTALLDATE';
SUBSTR(FILTERSTR,1,41) = '(SMODTYPE=''PTF'' | SMODTYPE=''USERMOD'')';
SUBSTR(FILTERSTR,42,19) = ' & FMID=''HMP1D00''';
SUBSTR(FILTERSTR,61,16) = ' & APPLY=''YES''';
SUBSTR(FILTERSTR,77,37) = ' & BYPASS=''YES'' & RECDATE>''01335''';

CSI          = ADDR(CSISTR);
CSILEN       = 12;
ZONE         = ADDR(ZONESTR);
ZONELEN      = 9;
ENTRYTYPE    = ADDR(ENTRYSTR);
ENTRYLEN     = 6;
SUBENTRYTYPE = ADDR(SUBENTSTR);
SUBENTRYLEN  = 16;
FILTER       = ADDR(FILTERSTR);
FILTERLEN    = 113;

CALL GIMAPI(QUERY,QPARMS,QRESULT,APILANG,RC,CC,MSGBUFF);

/****************************************/
/* PRINT ANY ERROR MESSAGES ENCOUNTERED */
/****************************************/
IF RC ¬=0
  THEN CALL ERRPRINT(QUERY);

/*******************************************************************/
/* CALL ROUTINE TO PRINT RESULTS OF QUERY IF QUERY WAS SUCCESSFUL */
/*******************************************************************/
IF RC<=4
  THEN CALL RESPRINT;

/****************************************/
/* FREE STORAGE RETURNED FROM THE QUERY */
/****************************************/
CALL GIMAPI(FREE,NULLPTR,NULLPTR,APILANG,RC,CC,MSGBUFF);

EXIT:
  RELEASE GIMAPI;

/*******************************************************************/
/* INTERNAL SUBROUTINES FOLLOW                                     */
/*******************************************************************/
RESPRINT:  PROCEDURE;

 DCL CURETYPE    POINTER;
 DCL CURENTRY    POINTER;
 DCL CURSUBENT   POINTER;
 DCL CURVER      POINTER;
 DCL CURVSUB     POINTER;
 DCL PRTITEM     POINTER;

 /*********************************/
 /* LOOP THROUGH EACH ENTRY TYPE */
 /*********************************/
 CURETYPE = QRESULT;                /* POINT TO HEAD OF LIST */
 DO WHILE (CURETYPE¬=SYSNULL);
   /* PRINT NAME OF ENTRY BEING PROCESSED */
   PUT EDIT('Entry Type: ',CURETYPE->ENTRY_LIST.TYPE)
           (SKIP,A(12),A(15));
   /*******************************************************/
   /* LOOP THROUGH EACH ENTRY PRINTING THE ENAME AND ZONE  */
   /* THEN THE LIST OF SUBENTRY VALUES.                    */
```

```
   /*******************************************************/
   CURENTRY = CURETYPE->ENTRIES;
   DO WHILE (CURENTRY¬=SYSNULL);
     PUT SKIP LIST('----------------------------------------');
     PUT EDIT('ENAME',':',CURENTRY->CSI_ENTRY.ENTRYNAME)
             (SKIP,X(2),A(5),X(10),A(1),X(1),A(8));
     PUT EDIT('ZONE',':',CURENTRY->CSI_ENTRY.ZONENAME)
             (SKIP,X(2),A(4),X(11),A(1),X(1),A(7));

     CURSUBENT=CURENTRY->SUBENTRIES;
     DO WHILE (CURSUBENT¬=SYSNULL);
       IF CURSUBENT->SUBENTRY.TYPE=TXT_VER THEN DO;
         CURVER=CURSUBENT->SUBENTRYDATA;
         DO WHILE (CURVER¬=SYSNULL);
           CURVSUB=CURVER->VERDATA;
           DO WHILE (CURVSUB¬=SYSNULL);
             PUT EDIT(CURVSUB->SUBENTRY.TYPE,'VER(',
                      CURVER->VERNUM,'):')
                     (SKIP,X(2),A(6),X(1),A(4),A(3),A(2),X(1));
             PRTITEM=CURVSUB->SUBENTRYDATA;
             CALL VALPRINT(PRTITEM);
             CURVSUB=CURVSUB->SUBENTRY.NEXT;
           END;
           CURVER=CURVER->VER.NEXT;
         END;
       END; /* End Process VER type subentries */
       ELSE DO;
         PUT EDIT(CURSUBENT->SUBENTRY.TYPE,':')
                 (SKIP,X(2),A(15),A(1),X(1));
         PRTITEM=CURSUBENT->SUBENTRYDATA;
         CALL VALPRINT(PRTITEM);
       END; /* End non-VER type subentries */


       CURSUBENT = CURSUBENT->SUBENTRY.NEXT;
     END; /* END SUBENT TYPE LOOP */

     CURENTRY = CURENTRY->CSI_ENTRY.NEXT; /* GET NEXT ENTRY */
   END; /* END ENTRY LOOP */
   PUT SKIP;
   CURETYPE = CURETYPE->ENTRY_LIST.NEXT;   /* GET NEXT ENTRY TYPE */
 END; /* END ENTRY TYPE LOOP */

END  RESPRINT;

VALPRINT:  PROCEDURE(ITEM1);
 DCL ITEM1       POINTER;
 DCL CURITEM     POINTER;
 DCL BUFFPTR     POINTER;
 DCL DATABUFF    CHAR(500) BASED(BUFFPTR);

 CURITEM = ITEM1;
 DO WHILE (CURITEM ¬=SYSNULL);
   BUFFPTR = CURITEM->DATA;
   PUT EDIT(SUBSTR(BUFFPTR->DATABUFF,1,CURITEM->DATALEN))
           (X(1),A);

   CURITEM = CURITEM->ITEM_LIST.NEXT; /* GET NEXT DATA VALUE */
   IF CURITEM¬=SYSNULL /* LINE UP NEXT VALUE IF THERE IS ONE */
     THEN PUT SKIP LIST('                 ');
 END; /* END DATA ITEM LOOP */

END VALPRINT;

ERRPRINT:  PROCEDURE(CMD);
 DCL CMD  CHAR(8);
```

```
  DCL CURMSG POINTER;
  DCL TEXTPTR     POINTER;
  DCL MSGTEXT     CHAR(256) BASED(TEXTPTR);


  PUT EDIT('Error processing command: ',CMD,'.  ','RC=',RC,'CC=',CC)
          (SKIP,A(26),A(8),A(3),A(3),F(5),X(2),A(3),F(5));
  IF MSGBUFF¬=SYSNULL THEN
  DO;
   PUT SKIP LIST('MESSAGES FOLLOW:');
   CURMSG = MSGBUFF;
   DO WHILE (CURMSG¬=SYSNULL);
     TEXTPTR = CURMSG->DATA;
     PUT SKIP LIST(SUBSTR(TEXTPTR->MSGTEXT,1,CURMSG->DATALEN));
     CURMSG = CURMSG->ITEM_LIST.NEXT;
   END;
  END;
   ELSE
    PUT SKIP LIST('NO MESSAGES RETURNED');
 END  ERRPRINT;
 END MAIN;
```

Sample Assembler Program

This sample program can be found in the SAMPLIB library as member name GIMASAMP.

```
 MAIN:
BALAPI   CSECT
         STM    14,12,12(13)
         LR     12,15
@PSTART  EQU    BALAPI
         USING  @PSTART,12
         ST     13,SAVE+4
         LA     14,SAVE
         ST     14,8(13)
         LR     13,14
*
* END OF STANDARD LINKAGE
*
BALAPI   AMODE 31
*
* SET UP PARAMETERS FOR QUERY
*
         XC    QUERY_PARMS,QUERY_PARMS
         LA    3,MYCSI
         ST    3,PCSI
         LA    3,19
         ST    3,CSILEN
         LA    3,MYZONE
         ST    3,PZONE
         LA    3,3
         ST    3,ZONELEN
         LA    3,MYENTRY
         ST    3,PENTRY
         LA    3,6
         ST    3,ENTRYLEN
         LA    3,MYSUBNTY
         ST    3,PSUBENTRY
         LA    3,1
         ST    3,SUBENTRYLEN
         LA    3,MYFILTER
         ST    3,PFILTER
         LA    3,16
         ST    3,FILTERLEN
*
* NOW LOAD THE API
```

```
*
         LA    2,APIPGM
         LOAD EPLOC=(2),LOADPT=PGMADR
*
* NOW DO THE QUERY
*
         L     15,PGMADR
         CALL (15),(QUERYCMD,QUERY_PARMS@,CMDOUT,APILANG,RC,CC,MSG@)
*
*
* NOW SEE WHAT WAS RETURNED
*
         L     3,RC
         LTR   3,3
         BNZ   ERRPRINT
*
* ESTABLISH ADDRESSABILITY
*
         OPEN (SYSPRINT,OUTPUT)
         L     3,CMDOUT
         USING ENTRY_LIST,3
         L      4,ENTRIES
         USING CSIENTRY,4
         L      5,SUBENTRIES
         USING SUBENTRY,5
         L      6,SUBENTDATA
         USING ITEM_LIST,6
         L      7,DATA
         USING RETDATA,7
*
* PRINT ENTRIES
*
PRTENT   LTR    4,4
         BZ     CLOSEOUT
         MVI    BUFFER,C' '
         MVC    BUFFER+1(119),BUFFER
         MVC    BUFFER(8),ENTRYNAME
         MVC    BUFFER+10(7),ZONENAME
         LA     2,ANSICHAR
         PUT    SYSPRINT,(2)
         B      PRTSUB
MOREENT  L      4,CSINEXT
         B      PRTENT
*
* PRINT SUBENTRIES
*
PRTSUB   LTR    5,5
         BZ     MOREENT
         MVI    BUFFER,C' '
         MVC    BUFFER+1(119),BUFFER
         MVC    BUFFER(11),SUBTYPE
         PUT    SYSPRINT,(2)
         B      PRTDATA
MORESUB  L      5,SUBNEXT
         B      PRTSUB
*
* PRINT DATA
*
PRTDATA  LTR    7,7
         BZ     MORESUB
         L      8,DATALEN
CHECKLEN C      8,OUTRECLN
         BNH    SETLEN
         L      8,OUTRECLN
SETLEN   LA    15,1
         SLR    8,15
         MVI   BUFFER,C' '
```

```
         MVC   BUFFER+1(119),BUFFER
         EX     8,@MOVDATA
         LA   2,ANSICHAR
         PUT  SYSPRINT,(2)
         L      8,DATALEN
         C      8,OUTRECLN
         BNH    MORESUB
         S      8,OUTRECLN
         ST     8,DATALEN
         A      7,OUTRECLN
         B      CHECKLEN
*
* PRINT ERROR MESSAGES
*
ERRPRINT OPEN   (SYSPRINT,OUTPUT)
         L      6,MSG@
         L      7,DATA
         L      8,DATALEN
CHKMSGLN C      8,OUTRECLN
         BNH    SETMSGLN
         L      8,OUTRECLN
SETMSGLN LA     15,1
         SLR    8,15
         MVI    BUFFER,C' '
         MVC    BUFFER+1(119),BUFFER
         EX     8,@MOVDATA
         LA     2,ANSICHAR
         PUT    SYSPRINT,(2)
         L      8,DATALEN
         C      8,OUTRECLN
         BNH    CLOSEOUT
         S      8,OUTRECLN
         ST     8,DATALEN
         A      4,OUTRECLN
         B      CHKMSGLN
*
CLOSEOUT CLOSE  SYSPRINT
*
* NOW FREE THE STORAGE OBTAINED DURING THE QUERY
*
CLEANUP  L     15,PGMADR
         CALL (15),(FREECMD,0,CMDOUT,APILANG,RC,CC,MSG@)
*
* NOW DELETE GIMAPI
*
         DELETE EPLOC=APIPGM
*
* EXIT
*
EXIT     LA     15,0
         L      13,4(,13)
         L      14,12(,13)
         LM     00,12,20(13)
         BR     14
*
*
@MOVDATA MVC    BUFFER(0),RETDATA
SYSPRINT DCB   DDNAME=SYSPRINT,DSORG=PS,MACRF=PM,LRECL=121,RECFM=FBA
ANSICHAR DC     CL1' '
BUFFER   DS     CL120
MYCSI    DC     CL19'TOPGUN.WAG.VSAM.CSI'
MYZONE   DC     CL3'TZ1'
MYENTRY  DC     CL6'SYSMOD'
MYFILTER DC     CL16'SMODTYPE=''PTF'''
MYSUBNTY DC     CL3'*'
APIPGM   DC     CL8'GIMAPI  '
QUERYCMD DC     CL8'QUERY   '
```

```
FREECMD  DC     CL8'FREE    '
APILANG  DC     CL3'ENU'
         DS     0F
QUERY_PARMS@ DC AL4(QUERY_PARMS)
PGMADR   DC     AL4(0)
CMDOUT   DC     AL4(0)
MSG@     DC     AL4(0)
OUTRECLN DC     F'120'
RC       DS     F'0'
CC       DS     F'0'
SAVE     DC     18F'0'
         GIMMASM
RETDATA  DSECT  CL0
         END
```

Chapter 7. Writing UNIX Shell Scripts

This chapter documents intended Programming Interfaces that allow the customer to write programs to obtain the services of IBM SMP/E for z/OS and OS/390, V3R1.

To simplify the post-install work for z/OS UNIX Services application programs, some UNIX applications include shell scripts. These scripts perform additional processing when SMP/E installs elements into the hierarchical file system. A product packager normally includes any necessary shell scripts with the product.

For example, if the hierarchical file system element is a TAR or PAX file, you can provide a shell script that performs the necessary steps to restore the file. As with other products, you use SMP/E to copy the element (a TAR or PAX file) to a directory in the hierarchical file system. However, you rely on the element's shell script to actually explode the file into its component subdirectories and files.

SMP/E provides IBM and vendor product packagers with a generic interface for writing UNIX shell scripts. This chapter describes the interface and includes suggestions for designing a shell script for SMP/E processing.

You define the shell script to SMP/E through a hierarchical file system MCS statement, as described in "Hierarchical File System Element MCS" on page 26. Once defined, the shell script receives control whenever SMP/E installs or deletes the element.

Designing a Shell Script for SMP/E Processing

To process a file in the hierarchical file system, a shell script must be able to cope with both of the actions that SMP/E can potentially perform on the file: copy and delete. That is, SMP/E can copy the file to a directory in the hierarchical file system (as a new file or a replacement for an existing file) and, later, SMP/E can delete the file from a hierarchical file system directory. A shell script must be able to detect either of these conditions (copy or delete) and respond accordingly.

Assume, for example, that as part of deleting or replacing a product on your system, you delete a function that was shipped in the product's tar file. SMP/E deletes only the original tar file from the directory in the hierarchical file system. It is the responsibility of the shell script to clean up (delete) the tar file's exploded component subdirectories and files.

Fortunately, SMP/E provides shell scripts with the necessary input. This input comes in the form of environment variables that SMP/E sets, as follows:

Variable	Description
SMP_Directory	Directory in the hierarchical file system that contains the file to be processed by your shell script. This directory should be considered the working directory for the shell script, and the shell script should not update any directories or files which do not reside within the working directory.
SMP_File	Name of the file to be processed by your shell script. This is the hierarchical file system element processed by SMP/E.

© Copyright IBM Corp. 1986, 2002

SMP_Action
Action that SMP/E is performing on the file. This value can be either of the following:

COPY
SMP/E is copying the file into the hierarchical file system directory.

DELETE
SMP/E is deleting the file from the hierarchical file system directory.

SMP_Phase
Point in processing in which SMP/E calls the shell script. This value can be either of the following:

PRE
SMP/E is calling the shell script before performing the action indicated by the SMP_Action variable.

POST
SMP/E is calling the shell script after performing the action indicated by the SMP_Action variable.

SMP_Phase is always set to PRE when SMP_Action is DELETE to ensure that SMP/E calls the shell script before deleting its corresponding element.

LC_ALL
The default value for all of the UNIX locale environment variables. This value is always set to IBM-1047.

IBM-1047 defines the United States English character set. By specifying a specific locale, all shell scripts invoked by SMP/E receive the same environment, regardless of the locale being used on any particular driving system.

This input allows you to design a shell script that can respond to SMP/E's actions, as described in the sections that follow.

Designing for Copy Actions

For a copy action, SMP/E sets the SMP_Action variable to COPY (as well as setting the other environmental variables) and passes control to the shell script.

The shell script should not assume a first-time environment for the file. For example, if APPLY REDO is in effect, previous copy processing for a file might have already completed successfully. Therefore the shell script should begin by performing some kind of clean-up processing before taking any copy-related actions.

Designing for Delete Actions

For a delete action, SMP/E sets the SMP_Action variable to DELETE (as well as setting the other environmental variables) and passes control to the shell script.

The shell script should not assume that the file has previously been installed. For example, if during an APPLY, a file is being installed for the first time, and is also being deleted by a subsequent SYSMOD, SMP/E might invoke the shell script to

delete the file before it has actually been copied to the Hierarchical File System. Therefore, the shell script should determine whether the file exists before taking any delete-related actions.

Designing for Diagnosis

Code your shell script to write status information to the STDOUT and STDERR files during the course of its processing. Doing so will aid users in verifying the successful completion of shell script processing, and, if necessary, diagnosing problems when failures occur.

SMP/E copies this information from the STDOUT and STDERR files to the print data set specified in the active HFSCOPY UTILITY entry where it can be viewed by the user. By default, SYSPRINT is the print data set.

It is recommended that shell scripts provide sufficient information about the completion of any functions they use, and especially about any detected error conditions.

Returning Control to SMP/E

When your shell script completes processing, it must return control to SMP/E. Your shell script returns control to SMP/E through the exit shell command, specifying an appropriate exit status (for example, *exit 0* or *exit –1*). SMP/E uses your shell script's exit status value to determine whether the shell script completed successfully.

SMP/E recognizes the following exit statuses from shell scripts:

Exit Status	Meaning
00	Shell script has completed successfully.
Any other value	Shell script processing has failed.

Example Shell Script

In the following example, the shell script is designed to process a UNIX tar file. The shell script is written so that it:

1. Explodes the tar file in response to a COPY action by SMP/E
2. Deletes all files from the directory in response to a DELETE action by SMP/E.

```
# This script will either explode a tar file file or delete all files in
# the directory.  The script uses the following environment variables
# for input:
#
#   SMP_Directory - directory in which the tar file resides
#   SMP_File      - name of the tar file
#   SMP_Phase     - indicates whether the shell script is being called
#                   before or after SMP/E has processed the file
#   SMP_Action    - the action that SMP/E is performing: COPY or DELETE
#
echo "Starting script processing..."
status=0                 # initialize script status
#
# Verify that the required input was received by the shell script.
#
if test ! "$SMP_Directory"
then
  echo "** No SMP_Directory parameter specified."
  status=-1
elif test ! "$SMP_File"
then
  echo "** No SMP_File parameter specified."
```

```
  status=-1
elif test ! "$SMP_Phase"
then
  echo "** No SMP_Phase parameter specified."
  status=-1
elif test ! "$SMP_Action"
then
  echo "** No SMP_Action parameter specified."
  status=-1
fi
#
# If a parameter error was detected, then exit now.
#
if test $status -ne 0               # If status is not 0, an error was detected
then
  echo "   Ensure the input environment variables for this script have been provided."
  echo "   If SMP/E was not used to invoke the script, correct the caller to specify "
  echo "   the input environment variables.  If SMP/E invoked this script, contact "
  echo "   the IBM support center."
  echo "Parameter error.  Exiting script with status $status"
  exit &status
fi
#
# If the script is being invoked after the tar file has been copied
# to the directory (SMP/E phase is post-copy), and the desired action
# is COPY, explode the tar file.
#
if test $SMP_Phase = POST
then
  if test $SMP_Action = COPY
  then
    cd $SMP_Directory                # Set the working directory for pax
    echo "Exploding all components of $SMP_Directory$SMP_File using the pax command"
    pax -rvf $SMP_Directory$SMP_File # Explode the tar file
    status=$?                        # Get the status of the pax command
    if test $status -ne 0            # If pax failed, indicate so to the user
    then
      echo "** pax command failure: pax ended with status $status"
    else
      echo "pax command completed successfully."
    fi
    ls -l $SMP_Directory            # List the contents of the directory
  fi
fi
#
# If the action is DELETE, delete all component files.
#
if test $SMP_Action = DELETE
then
  echo "Deleting the following from $SMP_Directory using the rm command:"
  ls -l $SMP_Directory              # List the contents of the directory
  cd $SMP_Directory                 # Set the working directory for rm
  rm *                              # Delete the directory and all files
  status=$?                         # Get the status of the delete
  if test $status -ne 0             # If rm failed, indicate so to the user
  then
    echo "** rm command failure: rm ended with status $status"
  else
    echo "rm command completed successfully."
  fi
  if test $status = 0               # If rm was OK, then...
  then
    mkdir $SMP_Directory            # ...recreate the directory, albeit empty
    status=$?                       # Get the status of the mkdir
    if test $status -ne 0           # If mkdir failed, indicate so to the user
   then
     echo "** mkdir command failure: mkdir ended with status $status"
```

```
    fi
  fi
fi
echo "Exiting script with status $status"
exit $status
```

Chapter 8. Library Change File Records

This chapter documents intended Programming Interfaces that allow the customer to write programs to obtain the services of IBM SMP/E for z/OS and OS/390, V3R1.

This chapter documents the various record types that are produced and written to the SMPDATA1 and SMPDATA2 data sets as a result of APPLY or RESTORE processing. You can use these records to propagate the libraries and members modified by SMP/E APPLY and RESTORE processing to other systems that require the same changes.

Note: The CHANGEFILE subentry in the OPTIONS entry must be set to **YES** to instruct SMP/E to create these records.

SMP/E provides macros containing the mappings of these records:
- GIMMALC for assembler
- GIMMCLC for C
- GIMMPLC for PL/I.

Library Change File Record Structure

The following sections provide samples of the various library change file records that are written to the SMPDATA1 and SMPDATA2 data sets as a result of APPLY or RESTORE processing.

Notes:

1. SMP/E COMPRESS processing does not create any library change records.
2. The library change file records are of varying lengths.
3. All character data in all library change records are in uppercase, except for the following, which contain mixed-case character data:
   - Aliases in Alias Record Type 0 records
   - Link names in Alias Record Type 0 records
   - Symbolic link names in Alias Record Type 1 records
   - Path names in Element Record Type 1 records
   - Path names in Library Record Type 1 records

   See “A0 - Alias Record Type 0” on page 388 and “L1 - Library Record Type 1” on page 397 for details.
4. The scale lines shown in the examples do not appear in the actual SMPDATA1 and SMPDATA2 data sets.
5. In Figure 68 on page 389, the binary zeros after the alias name are not shown in the example.
6. In Figure 69 on page 391, the binary zeros after the symbolic link name are not shown in the example.

Library Change File Record Types

The following are the valid record types produced by the library change interface:

Record Type	Description
A0	Alias Record Type 0
A1	Alias Record Type 1
C0	Continuation Record Type 0
E0	Element Record Type 0

© Copyright IBM Corp. 1986, 2002

E1	Element Record Type 1
H0	Header Record Type 0
L0	Library Record Type 0
L1	Library Record Type 1
L2	Library Record Type 2
P0	SYSMOD Status Record Type 0
S0	SMP/E Environment Record Type 0
T0	Trailer Record Type 0

A0 - Alias Record Type 0

An Alias Record Type 0 (A0) is created for each alias for an element or LMOD processed during APPLY or RESTORE processing. For hierarchical file system elements, the linkname is indicated in the record.

Multiple A0 records may be produced for the same element or LMOD, because more than one alias can exist for the same element or LMOD.

The purpose of the A0 record is to identify the aliases associated with the changed elements or LMODs associated with this execution of the APPLY or RESTORE command.

The format and contents of this record type are shown in Table 39.

Table 39. Alias Record Type 0

Field Name	Position (Decimal)	Length (Decimal)	Description
Record Type	1	2	The characters '**A0**'.
Name	3	8	The name of an SMP/E element or LMOD processed during APPLY or RESTORE processing. The data is left-justified and padded with blanks.
Type	11	12	The type of SMP/E element or LMOD processed during APPLY or RESTORE processing. The valid element types for an Alias Record Type 0 are: • Data elements • Hierarchical file system elements • MAC • LMOD • PROGRAM • SIDEDECK The data is left-justified and padded with blanks.
Action	23	8	The type of action SMP/E took against this alias of this element or LMOD during APPLY or RESTORE processing. Valid values are **ADDREP** and **DELETE**. This data is left-justified and padded with blanks.

Table 39. Alias Record Type 0 (continued)

Field Name	Position (Decimal)	Length (Decimal)	Description
DD Name	31	8	The ddname associated with the target library associated with the named element or LMOD in this A0 record. For action type **DELETE**, this field indicates the target library ddname from which the alias has been deleted. For action type **ADDREP**, , this field indicates the target library ddname into which the alias has been added or replaced. An A0 record is created for every unique library that has an alias change. Elements with multiple SYSLIBs will have the appropriate A0 records created for each unique SYSLIB changed. Therefore, it is possible to have the same element have the same change in alias structure in multiple SYSLIBs. The data is left-justified and padded with blanks. This field contains the ddname of the associated target library regardless of whether the allocation was done by a DD statement or DDDEF.
Alias	39	1023	This is an alias name associated with this SMP/E element or LMOD. If the element is a hierarchical file system element, then the linkname is placed in this field. The data is mixed-case characters and is left-justified and padded with binary zeros.

For LMODs that have an associated side deck, there is one A0 record created for each unique alias associated with the LMOD (indicated by LMOD in the element type field of the A0 record) and one A0 record created for each unique alias associated with the LMOD's side deck (indicated by SIDEDECK in the element type field of the A0 record). Both the A0 record with element type LMOD and the A0 record with element type SIDEDECK contain the same name (the LMOD's name) in the **Name** field of the A0 record.

For example, suppose that SMP/E adds load module LMODA, which has two aliases, LMA and LMDA. Load module LMODA has a side deck. Figure 68 shows the A0 records created for LMODA:

```
         1         2         3         4         5         6         7         8
----+----0----+----0----+----0----+----0----+----0----+----0----+----0----+----0
A0LMODA   LMOD        ADDREP  LINKLIB LMA
A0LMODA   LMOD        ADDREP  LINKLIB LMDA
A0LMODA   SIDEDECK    ADDREP  SIDELIB LMA
A0LMODA   SIDEDECK    ADDREP  SIDELIB LMDA
```

Figure 68. Example of Alias Record Type 0 records

A1 - Alias Record Type 1

An Alias Record Type 1 (A1) is created for each symbolic link associated with a hierarchical file system element and for each symbolic link associated with a load module within the hierarchical file system that is processed during APPLY or RESTORE processing. For hierarchical file system elements, the symbolic link

names are placed in the records. For load modules, values from the ALIAS (SYMLINK,*symlink*) control statements are placed in the records.

Multiple A1 records may be produced for the same hierarchical file system element or load module, because more than one symbolic link can exist for the same hierarchical file system element or load module.

The purpose of the A1 record is to identify the symbolic links associated with the changed hierarchical file system elements and the symbolic links associated with load modules processed with this execution of the APPLY or RESTORE command.

The format and contents of this record type are shown in Table 40.

Table 40. Alias Record Type 1

Field Name	Position (Decimal)	Length (Decimal)	Description
Record Type	1	2	The characters '**A1**'.
Name	3	8	The name of an SMP/E hierarchical file system element or load module processed during APPLY or RESTORE processing. The data is left-justified and padded with blanks.
Type	11	12	The type of SMP/E hierarchical file system element or LMOD processed during APPLY or RESTORE processing. The valid values are: • a hierarchical file system element type • **LMOD** The data is left-justified and padded with blanks.
Action	23	8	The type of action SMP/E took against this symbolic link during APPLY or RESTORE processing. Valid values are **ADDREP** and **DELETE**. The data is left-justified and padded with blanks.
DD Name	31	8	The ddname associated with the target library for the named hierarchical file system element or load module in this A1 record. The data is left-justified and padded with blanks. For action type **DELETE**, this field indicates the target library ddname **from** which the symbolic link has been deleted. For action type **ADDREP**, this field indicates the target library ddname **into** which the symbolic link has been added or replaced. An A1 record is created for all libraries modified within the hierarchical file system by having a hierarchical file system element replaced or deleted or by having a load module replaced or deleted. This field contains the ddname of the associated target library regardless of whether the allocation was done by a DD statement or DDDEF.
Symbolic Link	39	1023	This is a symbolic link associated with this SMP/E hierarchical file system element or LMOD. The data is mixed-case characters and is left-justified and padded with binary zeros.

For example, suppose that load module LMODA, which has two symbolic links, LMA and LMDA, is added to the BPXUSER library. Figure 69 shows the A1 records created for LMODA:

```
         1         2         3         4         5         6         7         8
----+----0----+----0----+----0----+----0----+----0----+----0----+----0----+----0
A1LMODA   LMOD        ADDREP  BPXUSER LMA
A1LMODA   LMOD        ADDREP  BPXUSER LMDA
```

Figure 69. Example of Alias Record Type 1

C0 - Continuation Record Type 0

One Continuation Record Type 0 (C0) is created for each delta produced by the results of APPLY or RESTORE processing when spill processing has occurred. The purpose of the C0 record is to uniquely identify the continuation of a set of library change records.

The format and contents of this record type are shown in Table 41.

Table 41. Continuation Record Type 0

Field Name	Position (Decimal)	Length (Decimal)	Description
Record Type	1	2	The characters '**C0**'.
Target Zone	3	7	The target zone name that was operated on by the APPLY or RESTORE command. It is left-justified and padded with blanks.
Time Stamp	10	13	The date and time that APPLY or RESTORE processing completed for the entire delta. This field is in the form *yyyydddhhmmss*, where: *yyyy* year *ddd* day *hh* hours *mm* minutes *ss* seconds Time is represented in 24-hour clock format (military time). The time value matches the time value in the T0 record and is the time that the GIM20501I message is issued for the associated APPLY or RESTORE command.
ERROR Count	23	6	The character representation of the count of SYSMODs applied or restored in error. The data is padded on the left with character zeroes (0).
INCMPLT Count	29	6	The character representation of the count of SYSMODs left with a status of INCMPLT by the APPLY or RESTORE. The data is padded on the left with character zeroes (0).
APPLIED or RESTORED Count	35	6	The character representation of the count of SYSMODs with a status of APPLIED or RESTORED. The data is padded on the left with character zeroes (0).
DELETED Count	41	6	The character representation of the count of SYSMODs with a status of DELETED. The data is padded on the left with character zeroes (0).
SUPD Count	47	6	The character representation of the count of SYSMODs with a status of SUPD. The data is padded on the left with character zeroes (0).

For example, suppose that a delta is produced for target zone TZONEA on January 16, 2001 at 9:57:22 AM. During this execution of SMP/E, two SYSMODs were applied in error, one SYSMOD was left incomplete, 123 SYSMODs were applied successfully, seven SYSMODs were deleted, and three SYSMODs were superseded. Figure 70 shows the C0 records created that for delta:

```
         1         2         3         4         5         6         7         8
----+----0----+----0----+----0----+----0----+----0----+----0----+----0----+----0
C0TZONEA 20010160957220000020000010001230000070000 03
```

Figure 70. Example of Continuation Record Type 0

E0 - Element Record Type 0

An Element Record Type 0 (E0) is created for each element or LMOD that changed in a target library during APPLY or RESTORE processing. The term changed in this context refers to an element or LMOD that been deleted or replaced in a target library as a result of SMP/E processing. See “Valid Action Types” on page 403 for more information.

The purpose of the E0 record is to identify the changed elements or LMODs in the associated target libraries identified by the L0 and L1 records.

The format and contents of this record type are shown in Table 42.

Table 42. Element Record Type 0

Field Name	Position (Decimal)	Length (Decimal)	Description
Record Type	1	2	The characters ’**E0**’.
Name	3	8	The name of an SMP/E element or LMOD processed during APPLY or RESTORE processing. The data is left-justified and padded with blanks.
Type	11	12	The type of SMP/E element or LMOD processed during APPLY or RESTORE processing. The valid element types for an Element Record Type 0 are: • data elements • hierarchical file system elements • LMOD • MAC • PROGRAM • SIDEDECK • SRC The data is left-justified and padded with blanks.
Action	23	8	The type of action SMP/E took against this element or LMOD during APPLY or RESTORE processing. Valid values are **ADDREP** and **DELETE**. This data is left-justified and padded with blanks.

Table 42. Element Record Type 0 (continued)

Field Name	Position (Decimal)	Length (Decimal)	Description
DD Name	31	8	The ddname associated with the target library associated with the named element or LMOD in this E0 record. The data is left-justified and padded with blanks. For cross-zone elements, this field indicates the SMP/E generated ddname associated with the SYSLIB for this element. The associated L0 record also contains the related true name for the SYSLIB in the cross-zone. For action type **DELETE**, this field indicates the target library ddname from which the element has been deleted. For action type **ADDREP**, this field indicates the target library ddname into which the element has been added or replaced. An E0 record is created for every unique library that has an element change. Elements with multiple SYSLIBs will have the appropriate E0 records created for each unique SYSLIB changed. Therefore, it is possible to have the same element have the same change take place in multiple SYSLIBs. This field contains the ddname of the associated target library regardless of whether the allocation was done by a DD statement or DDDEF.

For LMODs that have an associated side deck, there is one E0 record created for each LMOD (indicated by LMOD in the element type field of the E0 record) and one E0 record created for the LMOD's side deck (indicated by SIDEDECK in the element type field of the E0 record). Both the E0 record with element type LMOD and the E0 record with element type SIDEDECK contain the same name (the LMOD's name) in the *name* field of the E0 record.

For example, suppose that SMP/E adds load module LMODA, which has a SIDEDECK. Figure 71 shows the E0 records created for LMODA:

```
         1         2         3         4         5         6         7         8
----+----0----+----0----+----0----+----0----+----0----+----0----+----0----+----0----+----0
E0LMODA   LMOD        ADDREP  LINKLIB
E0LMODA   SIDEDECK    ADDREP  SIDELIB
```

Figure 71. Example of Element Record Type 0

E1 - Element Record Type 1

One Element Record Type 1 (E1) is created for each element having a UNIX shell script that changed in a target library during APPLY or RESTORE processing. The term changed in this context refers to an element that has been deleted or replaced in a target library as a result of SMP/E processing. See "Valid Action Types" on page 403 for more information.

The purpose of the E1 record is to identify the changed elements in the associated target libraries identified by the L0 and L1 records.

The format and contents of this record type are shown in Table 43 on page 394.

Library Change File Records

Table 43. Element Record Type 1

Field Name	Position (Decimal)	Length (Decimal)	Description
Record Type	1	2	The characters '**E1**'.
Name	3	8	The name of an SMP/E element processed during APPLY or RESTORE processing. The data is left-justified and padded with blanks.
Type	11	12	The type of hierarchical file system element processed by the APPLY or RESTORE command. The data is left-justified and padded with blanks.
Action	23	8	The type of action SMP/E took against this element during APPLY or RESTORE processing. Valid values are **ADDREP** and **DELETE**. This data is left-justified and padded with blanks.
DD Name	31	8	The ddname associated with the target library associated with the named element in this E1 record. The data is left-justified and padded with blanks. For cross-zone elements, this field indicates the SMP/E generated ddname associated with the SYSLIB for this element. The associated L1 record also contains the related true name for the SYSLIB in the cross-zone. For action type **DELETE**, this field indicates the target library ddname from which the element has been deleted. For action type **ADDREP**, this field indicates the target library ddname into which the element has been added or replaced. An E1 record is created for every unique library that has an element change. Elements with multiple SYSLIBs will have the appropriate E1 records created for each unique SYSLIB changed. Therefore, it is possible to have the same element have the same change take place in multiple SYSLIBs. It is also possible to have multiple E1 records for the same element in the same SYSLIB if the element is both deleted and replaced. Normally, only the net effect would be represented in the E1 record. However, when a shell script is run, two records are produced because the shell script is run for each action. This field contains the ddname of the associated target library regardless of whether the allocation was done by a DD statement or DDDEF.
Phase	39	8	The phase of processing when the shell script was invoked to complete the installation of the identified element. Valid values are: **PRE** Shell script was invoked before the action was performed. **POST** Shell script was invoked after the action was performed. **PRE,POST** Shell script was invoked both before and after the action was performed. The data is left-justified and padded with blanks.

Table 43. Element Record Type 1 (continued)

Field Name	Position (Decimal)	Length (Decimal)	Description
Path Name	47	263	The full path name of the shell script. The data is left-justified and padded with blanks. The value is of the form */directory/file*, in which: */directory/* Directory in the hierarchical file system in which the shell script resides. This value can be up to 255 characters. *file* Name of the shell script file. This value can be 1 to 8 characters long.

For example, suppose that a ++HFS element named XMPHFS was added to target zone TZONEB using a shell script named MYSHELL in directory */usr/lpp/abc/* and that shell script MYSHELL was invoked after XMPHFS was installed. Figure 72 shows the E1 records created for LMODA:

```
         1         2         3         4         5         6         7         8
----+----0----+----0----+----0----+----0----+----0----+----0----+----0----+----0
E1XMPHFS  HFS         ADDREP  TZONEB  POST    /usr/lpp/abc/MYSHELL
```

Figure 72. Example of Element Record Type 1

H0 - Header Record Type 0

One Header Record Type 0 (H0) is created for each delta produced by the results of APPLY or RESTORE processing. The purpose of the H0 record is to uniquely identify the start of a set of library change records.

The format and contents of this record type are shown in Table 44.

Table 44. Header Record Type 0

Field Name	Position (Decimal)	Length (Decimal)	Description
Record Type	1	2	The characters '**H0**'.
Zone Name	3	7	The target zone name that was operated on by the APPLY or RESTORE command. It is left-justified and padded with blanks.
Time Stamp	10	13	The date and time that APPLY or RESTORE processing completed for the entire delta. This field is in the form *yyyydddhhmmss*, where: *yyyy* year *ddd* day *hh* hours *mm* minutes *ss* seconds Time is represented in 24-hour clock format (military time). The time value matches the time value in the T0 record and is the time that the GIM20501I message is issued for the associated APPLY or RESTORE command.
ERROR Count	23	6	The character representation of the count of SYSMODs applied or restored in error. The data is padded on the left with character zeroes (0).

Table 44. Header Record Type 0 (continued)

Field Name	Position (Decimal)	Length (Decimal)	Description
INCMPLT Count	29	6	The character representation of the count of SYSMODs left with a status of INCMPLT by the APPLY or RESTORE. The data is padded on the left with character zeroes (0).
APPLIED or RESTORED Count	35	6	The character representation of the count of SYSMODs with a status of APPLIED or RESTORED. The data is padded on the left with character zeroes (0).
DELETED Count	41	6	The character representation of the count of SYSMODs with a status of DELETED. The data is padded on the left with character zeroes (0).
SUPD Count	47	6	The character representation of the count of SYSMODs with a status of SUPD. The data is padded on the left with character zeroes (0).

For example, suppose that a delta is produced for target zone TZONEA on January 16 of 2001 at 9:57:22 AM. During this execution of SMP/E, two SYSMODs were applied in error, one SYSMOD was left incomplete, 123 SYSMODs were applied successfully, seven SYSMODs were deleted, and three SYSMODs were superseded. Figure 73 shows the H0 records created for that delta:

```
         1         2         3         4         5         6         7         8
----+----0----+----0----+----0----+----0----+----0----+----0----+----0----+----0
H0TZONEA 20010160957220000020000010001230000070000 03
```

Figure 73. Example of Header Record Type 0

L0 - Library Record Type 0

One Library Record Type 0 (L0) is created for each target library changed during APPLY or RESTORE processing that is not associated with a pathname. A Library Record Type 1 (L1) is created for pathnames.

The purpose of the L0 record is to identify the target libraries (excluding pathnames) that were changed by this execution of APPLY or RESTORE.

SYSLIB concatenations used during the APPLY or RESTORE do not produce any L0 records.

The format and contents of this record type are shown in Table 45.

Table 45. Library Record Type 0

Field Name	Position (Decimal)	Length (Decimal)	Description
Record Type	1	2	The characters '**L0**'.
DD Name	3	8	The SMP/E ddname associated with this L0 record. The data is left-justified and padded with blanks. This field contains the ddname of the allocated target library regardless of whether the allocation was done by a DD statement or DDDEF. For cross-zone libraries, this field indicates the SMP/E-generated ddname for this library.

Table 45. Library Record Type 0 (continued)

Field Name	Position (Decimal)	Length (Decimal)	Description
SYSLIB ddname	11	8	This is the SMP/E SYSLIB ddname associated with cross-zone libraries. This is the true ddname of the cross-zone library in the associated cross-zone. The data is left-justified and padded with blanks. For libraries that are not cross-zone libraries, this field is set to blanks.
Cross-Zone Name	19	7	The cross-zone name associated with this cross-zone library. The data is left-justified and padded with blanks. For libraries that are not cross-zone libraries, this field is set to blanks.
Library Type	26	8	The type of library that is associated with this L0 record. The valid library types are **LIBRARY**, **PDS**, and **SEQ**. The data is left-justified and padded with blanks.
Volume Name	34	6	The volume name associated with the SMP/E target library named in this record.
Data Set Name	40	44	The data set name of an SMP/E target library that was changed during APPLY or RESTORE processing. The data is left-justified and padded with blanks.
Catalog Data Set Name	84	44	The catalog data set name associated with the target library data set name identified in this record. The data is left-justified and padded with blanks. If the data set name identified in this record is not cataloged, this field is set to blanks.

For example, Figure 74 shows the L0 record generated for a PDS library named SYS1.LINKLIB on volume MVSRES in catalog CATALOG.MVSICFM.VMVSRES. The library has a ddname of LINKLIB.

```
                                                                                                                                  1         1
         1         2         3         4         5         6         7         8         9         0         1
----+----0----+----0----+----0----+----0----+----0----+----0----+----0----+----0----+----0----+----0----+----0----+----0
L0LINKLIB                PDS     MVSRESSYS1.LINKLIB                                CATALOG.MVSICFM.VMVSRES
```

Figure 74. Example of Library Record Type 0

L1 - Library Record Type 1

One Library Record Type 1 (L1) is created for each target library changed during APPLY or RESTORE processing that is associated with a pathname. An L0 record is created for libraries that are not associated with pathnames.

The purpose of the L1 record is to identify the target libraries containing pathnames that were changed by the associated APPLY or RESTORE command.

The format and contents of this record type are shown in Table 46.

Table 46. Library Record Type 1

Field Name	Position (Decimal)	Length (Decimal)	Description
Record Type	1	2	The characters '**L1**'.

Table 46. Library Record Type 1 (continued)

Field Name	Position (Decimal)	Length (Decimal)	Description
DD Name	3	8	The SMP/E ddname associated with this Library Type 1 record. The data is left-justified and padded with blanks. This field contains the ddname of the allocated target library regardless of whether the allocation was done by a DD statement or DDDEF. For cross-zone libraries, this field indicates the SMP/E-generated ddname for this library.
SYSLIB Name	11	8	This is the SMP/E SYSLIB ddname associated with cross-zone libraries. This is the true ddname of the cross-zone library in the associated cross-zone. The data is left-justified and padded with blanks. For libraries that are not cross-zone libraries, this field is set to blanks.
Cross-Zone name	19	7	The cross-zone name associated with this cross-zone library. The data is left-justified and padded with blanks. For libraries that are not cross-zone libraries, this field is set to blanks.
Library Type	26	8	The type of library that is associated with this L1 record. The only valid type is **HFS**. The data is left-justified and padded with blanks.
Path Name	34	255	The path name of an SMP/E target library that was changed during APPLY or RESTORE processing. The data is left-justified and padded with blanks.

For example, Figure 75 shows the L1 record generated for a pathname of '*/hfs_path_name/*', which is an HFS library with the ddname of HFSLIB1.

```
         1         2         3         4         5         6         7         8
----+----0----+----0----+----0----+----0----+----0----+----0----+----0----+----0
L1HFSLIB1               HFS/hfs_path_name/
```

Figure 75. Example of Library Record Type 1

L2 - Library Record Type 2

A Library Record Type 2 (L2) is created for each physical data set associated with a directory in the hierarchical file system that was changed during APPLY or RESTORE processing. The purpose of the L2 record is to identify the physical data set in which a particular directory is located, how the data set is related to the directory, and the ddname that was used to allocate the directory.

The format and contents of this record type are shown in Table 47.

Table 47. Library Record Type 2

Field Name	Position (Decimal)	Length (Decimal)	Description
Record Type	1	2	The characters '**L2**'.

Table 47. Library Record Type 2 (continued)

Field Name	Position (Decimal)	Length (Decimal)	Description
DD Name	3	8	The SMP/E ddname associated with this Library Type 2 record. The data is left-justified and padded with blanks. This field contains the ddname that was used to allocate the directory in the hierarchical file system that was updated. This value can be used to correlate the Library Type 2 records with the Library Type 1 records that describe the directory.
Relationship	11	8	This field describes the relationship between the updated directory and the physical data set identified in the record. Valid relationships are: **PATHHFS** The HFS data set specified in this record contains the directory that contains a file updated by SMP/E. **SYMHFS** The HFS data set specified in this record contains the directory that contains a symbolic link associated with a file updated by SMP/E. Library Type 2 records with a type of SYMHFS are created only when the SYMHFS data set names are different than the PATHHFS data set name. In addition, records only for unique SYMHFS data set names are produced. For example, if a file updated by SMP/E has two symbolic link values, and those symbolic link values reside in two directories that reside in the same physical data set, then only one Library Type 2 record with a type of SYMHFS is produced to describe this data set. In addition, if the data set that contains the symbolic links is the same physical data set that contains the file updated by SMP/E, then no Library Type 2 records with a type of SYMHFS are produced; a single record with a type of PATHHFS describes the physical data set that contains the file and its symbolic links. The data is left-justified and padded with blanks.
Physical Data Set Name	19	44	data set name of the physical data set that was updated when SMP/E updated a file in the hierarchical file system. The data is left-justified and padded with blanks.

For example, suppose the following PTF is selected for APPLY processing and that the SBKSBIN library is allocated to directory /service/usr/lpp/booksrv/cgi-bin/IBM/ in the hierarchical file system.

```
++PTF(UW12345).
++VER(Z038) FMID(HYY2900).
++HFS(BKSMAIN) SYSLIB(SBKSBIN) DISTLIB(ABKSBIN)
  PARM(PATHMODE(7,5,5))
  LINK('../bksmain')
  SYMLINK('../../../../../bin/bksmain')
  SYMPATH('../usr/lpp/booksrv/cgi-bin/bksmain').
```

The resulting APPLY processing replaces the BKSMAIN file in the /service/usr/lpp/booksrv/cgi-bin/IBM/ directory with the copy of the HFS element supplied in the PTF. Also, when the file's symbolic link value specified on the MCS is concatenated with the file's directory, the symbolic link value resolves to /service/bin/bksmain. This file is the symbolic link and resides in the /service/bin/

directory. In this example, the directory containing the symbolic link is in a different physical data set than the directory that contains the file BKSMAIN.

At the end of APPLY processing, SMP/E produces L1 and L2 records to summarize the updates performed. Figure 76 shows the L1 record that describes the directory that contains the file, as well as the L2 records that describe the data sets that contain the file and its symbolic links.

```
         1         2         3         4         5         6         7         8
----+----0----+----0----+----0----+----0----+----0----+----0----+----0----+----0
L1SBKSBIN                HFS     /service/usr/lpp/booksrv/cgi-bin/IBM/
L2SBKSBIN PATHHFS OMVS.HFS.BOOKSRV
L2SBKSBIN SYMHFS  OMVS.HFS.ROOT.ZOS130
```

Figure 76. Example of Library Record Type 2

P0 - SYSMOD Status Record Type 0

Status records are created for SYSMODs for which some utility work was done during the command and for SYSMODs superseded by SYSMODs that were successfully applied or restored.

Note: The superseded SYSMODs are included to aid in analyzing when a set of deltas is ready for distribution. When a SYSMOD in ERROR status is noted as superseded in a subsequent delta, it's error status may be considered resolved.

The format and contents of this record type are shown in Table 48.

Table 48. SYSMOD Status Record Type 0

Field Name	Position (Decimal)	Length (Decimal)	Description
Record Type	1	2	The characters '**P0**'.
SYSMOD ID	3	7	The SYSMOD ID.
Status	10	8	The status of the SYSMOD. The following text may appear in this field. Where the text is less than 8 characters, it is left justified and padded with blanks. • APPLIED • DELETED • ERROR • INCMPLT • RESTORED • SUPD The status in this library change record is consistent with the status of the SYSMOD as reported in the SYSMOD STATUS REPORT. **Note:** SYSMODs identified in the SYSMOD STATUS REPORT with the following status are not included in the library change records, because they failed during SYSMOD selection processing. • EXCLUDED • HELD • NOGO • NOGO(E) • NOGO(H)

Table 48. SYSMOD Status Record Type 0 (continued)

Field Name	Position (Decimal)	Length (Decimal)	Description
FMID	18	7	The FMID of the SYSMOD. If the status is SUPD and the SYSMOD is not in process, this field contains blanks.
Type	25	8	The SYSMOD type. The following text is valid in this field: • FUNCTION • PTF • APAR • USERMOD If the status is SUPD and the SYSMOD is not in process, this field contains blanks.

The SYSMOD Status (P0) records follow the E0 record in the set of library change records for the command. Figure 77 shows examples of P0 records written for APPLY processing.

```
         1         2         3         4         5         6         7         8
----+----0----+----0----+----0----+----0----+----0----+----0----+----0----+----0
P0UZ00002ERROR   H000001PTF
P0UZ00001APPLIED H000001PTF
P0UZ00000SUPD
```

Figure 77. Example of SYSMOD Status Records

Additionally, fields are added to the header and trailer records to represent the count of SYSMODs represented in the P0 records with each status.

This information tells you whether any errors are contained in the current delta. However, just because a delta is error free, it does not mean that it can be distributed without resolving errors in previous deltas. You must perform the task of error resolution among deltas prior to distribution in order to ensure an error free package. Refer to “Usage Recommendations” on page 404 for usage information.

S0 - SMP/E Environment Record Type 0

One SMP/E Environment Record Type 0 (S0) is created for each delta produced by the results of APPLY or RESTORE processing.

The purpose of the S0 record is to identify the SMP/E environment from which this set of library change records was derived.

The format and contents of this record type are shown in Table 49.

Table 49. SMP/E Environment Record Type 0

Field Name	Position (Decimal)	Length (Decimal)	Description
Record Type	1	2	The characters ’**S0**’.
Command	3	7	The SMP/E command that was executed. Valid values are **APPLY** or **RESTORE**. The data is left-justified and padded with blanks.

Table 49. SMP/E Environment Record Type 0 (continued)

Field Name	Position (Decimal)	Length (Decimal)	Description
SMP/E Level	10	8	The level of SMP/E under which the APPLY or RESTORE command was executed. This subfield is in the form *vvrrmmpp*, where: **vv** version of SMP/E **rr** release of SMP/E **mm** release of SMP/E **pp** PTF level of SMP/E
Data Set Name	18	44	The data set name of the SMP/E target zone CSI that contains the target zone operated on by the SMP/E APPLY or RESTORE function. The data is left-justified and padded with blanks.
Catalog Data Set Name	62	44	The catalog data set name of the SMP/E target zone CSI that contains the target zone operated on by the SMP/E APPLY or RESTORE function. The data is left-justified and padded with blanks.
Volume Name	106	6	The volume name of the SMP/E target zone CSI that contains the target zone operated on by the SMP/E APPLY or RESTORE function.

For example, Figure 78 shows an S0 record for a target zone CSI data set named SAMPLE.ZOSYS.TARGET.CSI on volume SMPVOL in catalog CATALOG.MVSICF1.VMVSRES. The SMP/E level is 03.01.00, and the SMP/E command executed was APPLY.

```
                                                                                                                                                                                                                                                                                                                                                                                                                                                                                                                                                                                                                                                                                                                                                                                                                                                                                                                                                                                                                                                                                                                                                                                                                                                                                                                                                                                                                                                                                                                                                                                                                                                                                                                                                                                                                                                                                                                                                                                                                                                                                                                                                                                                                                                                                                                                                                                                                                                                                                                                                                                                                                                                                                                                                                                                                                                                                                                                                                                                                                                                                                                                                                                                                                                                                                                                                                                                                                                                                                                                                                                                                                                                                                                                                                                                                                                                                                                                                                                                                                                                                                                                                                                                                                                                                                                                                                                                                                                                                                                                                                                                                                                                                                                                                                                                                                                                                                                                                                                                                                                                                                                                                                                                                                                                                                                                                                                                                                                                                                                                                                                                                                                                                                                                                                                                                                                                                                                                                                                                                                                                                                                                                                                                                                                                                                                                                                                                                                                                                                                                                                                                                                                                                                                                                                                                                                                                                                                                                                                                                                                                                                                                                                                                                                                                                                                                                                                                                                                                                                                                                                                                                                                                                                                                                                                                                                                                                                                                                                                                                                                                                                                                                                                                                                                                                                                                                                                                                                                                                                                                                                                                                                                                
          1         2         3         4         5         6         7         8         9         0         1         2
----+----0----+----0----+----0----+----0----+----0----+----0----+----0----+----0----+----0----+----0----+----0----+----0----+----0
S0APPLY  03010000SAMPLE.ZOSYS.TARGET.CSI
CATALOG.MVSICF1.VMVSRES                     SMPVOL
```

Figure 78. Example of SMP/E Environment Record Type 0

T0 - Trailer Record Type 0

One Trailer Record Type 0 (T0) is created for each delta produced by the results of APPLY or RESTORE processing. The purpose of the T0 record is to uniquely identify the end of a set of library change records.

The format and contents of this record type are shown in Table 50.

Table 50. Trailer Record Type 0

Field Name	Position (Decimal)	Length (Decimal)	Description
Record Type	1	2	The characters '**T0**'.
Zone Name	3	7	The target zone name that was operated on by the APPLY or RESTORE command. It is left-justified and padded with blanks.

Table 50. Trailer Record Type 0 (continued)

Field Name	Position (Decimal)	Length (Decimal)	Description
Time Stamp	10	13	The date and time that APPLY or RESTORE processing completed for the entire delta. This field is in the form *yyyydddhhmmss*, where: *yyyy* year *ddd* day *hh* hours *mm* minutes *ss* seconds Time is represented in 24-hour clock format (military time). The time value matches the time value in the T0 record and is the time that the GIM20501I message is issued for the associated APPLY or RESTORE command.
ERROR Count	23	6	The character representation of the count of SYSMODs applied or restored in error. The data is padded on the left with character zeroes (0).
INCMPLT Count	29	6	The character representation of the count of SYSMODs left with a status of INCMPLT by the APPLY or RESTORE. The data is padded on the left with character zeroes (0).
APPLIED or RESTORED Count	35	6	The character representation of the count of SYSMODs with a status of APPLIED or RESTORED. The data is padded on the left with character zeroes (0).
DELETED Count	41	6	The character representation of the count of SYSMODs with a status of DELETED. The data is padded on the left with character zeroes (0).
SUPD Count	47	6	The character representation of the count of SYSMODs with a status of SUPD. The data is padded on the left with character zeroes (0).

For example, Figure 79 shows a T0 record for a target zone named MYTZN. The delta processing for this zone ended on January 16, 2001 at 10:12:34 AM. During this execution of SMP/E, one SYSMOD was applied in error, four SYSMODs were left incomplete, ten SYSMODs were applied successfully, one SYSMOD was deleted, and two SYSMODs were superseded.

```
         1         2         3         4         5         6         7         8
----+----0----+----0----+----0----+----0----+----0----+----0----+----0----+----0
T0MYTZN  20010161012340000010000040000100000010000002
```

Figure 79. Trailer Record Type 0

Valid Action Types

Action Meaning

ADDREP

The ADDREP action indicates either that a new element or LMOD was added to a target library during APPLY or RESTORE processing, or that an existing element or LMOD was replaced in a target library during APPLY or RESTORE processing

This includes elements added or replaced by way of:

- Data element MCS
- Hierarchical file system element MCS
- Link-edits or copies of load modules:
  - ++MOD MCS (add or replace)
- ++MAC MCS
- ++MACUPD MCS
- ++MOVE MCS for MACs, SRC, and LMODs
- ++PROGRAM MCS
- ++RENAME MCS for load modules
- ++SRC MCS
- ++SRCUPD MCS
- ++ZAP MCS

This also includes aliases added or replaced by way of:

- Data element MCS with ALIAS operand
- Hierarchical file system element MCS with LINK operand
- Link-edits or copies of load modules:
  - ++MOD MCS with TALIAS operand
  - LMODs defined in JCLIN
- ++MAC MCS with MALIAS operand
- ++MACUPD MCS with MALIAS operand
- ++MOVE MCS for MACs and LMODs
- ++PROGRAM MCS with ALIAS operand
- ++RENAME MCS for load modules

DELETE

The DELETE action indicates that an element or LMOD was deleted from a target library during APPLY processing.

This includes elements and their aliases deleted by way of:

- DELETE operand on data element MCS
- DELETE operand on hierarchical file system element MCS
- DELETE operand on ++MAC MCS
- DELETE operand on ++PROGRAM MCS
- DELETE operand on ++SRC MCS
- DELETE operand on ++VER MCS
- ++DELETE MCS for load modules

This also includes aliases deleted by way of:

- ALIAS operand on ++DELETE MCS for load modules

Usage Recommendations

Users cannot simply look at the records created by the library change interface and move the identified parts. As is the case whenever SMP/E is executed, each processed SYSMOD has a specific completion status when the particular APPLY or RESTORE completes. Therefore, the results of each APPLY or RESTORE must be looked at collectively. Until a set of SYSMODs has been successfully processed, you cannot distribute the library change records associated with those SYSMODs.

Therefore, you must first get a successful APPLY CHECK or RESTORE CHECK before attempting to use the records produced by library change processing for a specified target zone. Since there are no records produced during CHECK processing, there are no records to be lost until delta processing is activated.

Once activated, delta processing produces records for an execution of APPLY or RESTORE. Since all SYSMODs may not successfully complete in one run, the records from each run against the same set of SYSMODs must be kept.

Once a successful APPLY or RESTORE is obtained, the net result of the processing must be analyzed by elements, LMODs, or both to determine the appropriate action to take to distribute the elements and LMODs.

Alternatively, once a successful APPLY or RESTORE is obtained, the net result of the libraries updated can be analyzed to determine the appropriate action to take to distribute the libraries affected by the APPLY/RESTORE activity.

Chapter 9. SMP/E Exit Routines

This chapter describes intended Programming Interfaces that allow the customer to write programs to obtain the services of IBM SMP/E for z/OS and OS/390, V3R1.

This chapter describes how to write exit routines that:

- Process statements in SMPPTFIN at RECEIVE time
- Control retry processing when data sets run out of space during ACCEPT, APPLY, GZONEMERGE, LINK, RECEIVE, or RESTORE processing.

A common parameter list is used to pass information between SMP/E and the exit routines. It is pointed to by register 1 and is mapped by macro GIMMPUXP in SYS1.MACLIB. Table 51 shows the format and contents of the parameter list.

Table 51. GIMMPUXP: Exit Routine Parameter List

Field Name	Offset (DEC)	Offset (HEX)	Length	Description
UXPUXNUM	+ 0	+ 0	2	Exit routine number: X'0001' – RECEIVE X'0002' – RETRY
	+ 2	+ 2	2	Not used
UXPUXNAM	+ 4	+ 4	8	Name of exit routine
UXPUXAD	+12	+ C	4	Address of exit routine
UXPFUNCT	+16	+10	8	SMP/E command
UXPPRMAD	+24	+18	4	Address of exit routine parameter list
UXPLOJAD	+28	+1C	4	Not used
UXPLOEAD	+32	+20	4	Not used
UXPCTBAD	+36	+24	4	Reserved for future use
UXPMODAD	+40	+28	4	Reserved for future use

The following sections describe the exit routines for RECEIVE and retry processing.

RECEIVE Exit Routine

The RECEIVE exit routine allows you to scan statements in the SMPPTFIN data set at RECEIVE time. This exit routine must be defined by a GIMEXITS control statement in the GIMEXITS member of SMPPARM, which tells SMP/E RECEIVE processing that an exit routine exists and should be called. Optionally, the GIMEXITS control statement may also specify the data set containing the exit routine. This exit routine must be a load module residing in an authorized library. For more information on specifying exit routines in GIMEXITS, see Chapter 3, “Defining Control Statements in SMPPARM Members” on page 113. The RECEIVE exit routine is loaded at the start of RECEIVE command processing and is deleted at the end of RECEIVE processing.

When this exit routine is called, the parameter list contains the values shown in Table 52 on page 408 and Table 53 on page 408.

© Copyright IBM Corp. 1986, 2002

Table 52. RECEIVE Exit Routine: Parameter List Values

Field Name	Description
UXPUXNUM	X'0001' (exit routine number)
UXPUXNAM	Name of exit routine
UXPUXAD	Address of exit routine
UXPFUNCT	RECEIVE
UXPPRMAD	Address of 81-byte buffer area (see Table 53)

Table 53. RECEIVE Exit Routine: Buffer Passed by UXPPRMAD

Field Name	Offset (DEC)	Offset (HEX)	Length	Description
UX001RC	+ 0	+ 0	1	X'00' – Buffer contains record to be processed X'04' – End-of-file on SMPPTFIN
UX001RCD	+ 1	+ 1	80	Record from SMPPTFIN

According to the input record, the RECEIVE exit may decide to continue RECEIVE processing, change the record, insert data after the record, or skip the record. Or, it may choose to stop processing for the SYSMOD, for the RECEIVE command, or for SMP/E.

When the exit routine returns control to SMP/E, it must set register 15 to one of the following values:

Value	Meaning
0	Continue normal RECEIVE processing.
8	Stop SYSMOD processing. SMP/E does not receive this SYSMOD, but continues to pass records from the SYSMOD to the exit routine.
12	Stop RECEIVE processing.
16	Stop SMP/E processing.
20	Insert a record after the current one in the buffer.
24	Skip the record in the buffer area.

If any other value is returned, SMP/E issues an error message and fails.

Changing Records Within SMPPTFIN

To change the current record within the SMPPTFIN data set, the exit routine must change the record currently in UX001RCD and set the return code in register 15 to 0 or 20. A return code of 0 indicates to SMP/E that the changed record should be processed and normal processing should continue. A return code of 20 indicates to SMP/E that the exit routine inserts records after this changed record. For more information, see Inserting Records Within SMPPTFIN.

Inserting Records Within SMPPTFIN

To insert one or more records within the SMPPTFIN data set after the current record in UX001RCD, the exit routine must set the return code in register 15 to 20.

SMP/E first processes the current record in UX001RCD; then it calls the exit routine again. On this call, the exit routine must place the record to be inserted into

UX001RCD. If more records are to be inserted, the exit routine must set the return code in register 15 to 20. If this is the last record to be inserted, the exit routine must set the return code to 0.

When the exit routine passes a return code of 0, SMP/E processes the record in UX001RCD; then it continues processing with the next record in the SMPPTFIN data set.

Inserting Records at the End of SMPPTFIN

To insert one or more records at the end of the SMPPTFIN data set, the exit routine must set the return code in register 15 to 20.

SMP/E then calls the exit routine again. On this call, the exit routine must place the record to be inserted into UX001RCD. If more records are to be inserted, the exit routine must set the return code in register 15 to 20. If this is the last record to be inserted, the exit routine must set the return code to 0. SMP/E processes the inserted records as if they were at the end of the SMPPTFIN data set.

When the exit routine passes a return code of 0, SMP/E processes the record in UX001RCD; then it continues with normal end-of-file processing.

Note: When you specify the SELECT operand during RECEIVE processing, and all selected SYSMODs have been processed, SMP/E indicates end-of-file to the exit routine. If the exit routine passes a return code of 20 at this point, the add request is ignored, and SMP/E continues with end-of-file processing.

Skipping Records in SMPPTFIN

To skip a record in SMPPTFIN, the exit routine must set the return code in register 15 to 24. SMP/E does not process the current record in UX001RCD; instead, it processes the next record in SMPPTFIN.

Retry Exit Routine

The retry exit routine enables you to control retry processing when a data set runs out of space during ACCEPT, APPLY, GZONEMERGE, LINK, RECEIVE, or RESTORE processing. (In retry processing, the data set is compressed and the utility that failed is called again.) This exit routine must be defined by a GIMEXITS control statement in the GIMEXITS member of SMPPARM, which tells SMP/E retry processing that an exit routine exists and should be called. Optionally, the GIMEXITS control statement may also specify the data set containing the exit routine. This exit routine must be a load module residing in an authorized library. For more information on specifying exit routines in GIMEXITS, see Chapter 3, “Defining Control Statements in SMPPARM Members” on page 113. The retry exit routine is loaded at the start of ACCEPT, APPLY, GZONEMERGE, LINK, RECEIVE, or RESTORE command processing and is deleted at the end of command processing.

Note: The processing of this routine is not affected by the debatching SMP/E does after retry processing fails, because this routine is called as part of the initial retry processing, **before** debatching is attempted.

When a data set runs out of space, an *x*37 abend occurs. If SMP/E determines that a retry can be attempted, it cancels the abend dump and calls the retry exit routine. The parameter list contains these values:

Retry Exit Routine

Table 54. Retry Exit Routine: Parameter List Values

Field Name	Description
UXPUXNUM	X'0002' (exit routine number)
UXPUXNAM	Name of exit routine
UXPUXAD	Address of exit routine
UXPFUNCT	ACCEPT, APPLY, GZMRG, LINK, RECEIVE, or RESTORE
UXPPRMAD	Address of 25-byte parameter list (see Table 55)

Table 55. Retry Exit Routine: Parameter List Passed by UXPPRMAD

Field Name	Offset (DEC)	Offset (HEX)	Length	Description
UX002DDN	+ 0	+ 0	8	ddname of data set that ran out of space
UX002PGM	+ 8	+ 8	8	Name of the utility program that failed
UX002ACH	+16	+10	3	ABEND code (hex) in the same format as field SDWACMPC in the SDWA control block
UX002RCH	+19	+13	1	ABEND reason code (hex)
UX002ACP	+20	+14	3	ABEND code (EBCDIC)
UX002RCP	+23	+17	2	ABEND reason code (EBCDIC)

According to the input, the retry exit can either cancel retry processing or perform some other method of recovery.

When the exit routine returns control to SMP/E, it must set register 15 to one of the following values:

Value	Meaning
0	Continue normal retry processing.
12	Stop command processing and perform no retry.
16	Stop SMP/E processing and perform no retry.
20	Perform modified retry processing. Call the failing utility, but do not compress the failing data set.

If any other value is returned, SMP/E converts it to 12, and command processing fails.

Chapter 10. JCL Statements Required to Invoke SMP/E

Unless you are using the SMP/E dialogs, you must provide the following JCL statements to invoke SMP/E:

- A JOB statement
- An EXEC statement
- DD (data definition) statements

JOB Statement

The **JOB** statement describes your installation-dependent parameters. The JOB statement (or the EXEC statement, or both) can also include the REGION parameter to set the size of the region in which SMP/E runs. For details, see *z/OS MVS JCL User's Guide*, SA22-7598 or *z/OS MVS JCL Reference*, SA22-7597

Note: To enable the SMP/E job step to get the maximum space above 16 megabytes. you can specify REGION=0M.

EXEC Statement

The **EXEC** statement must specify PGM=GIMSMP or the name of your cataloged procedure for calling SMP/E. (For an example of a cataloged procedure, see *SMP/E User's Guide*.) The following can be specified in the EXEC statement PARM parameter:

CSI=*dsname*

where *dsname* is the name of the CSI data set containing the global zone. (This data set is also known as the *master CSI*.) This parameter is used to enable SMP/E to allocate the master CSI data set dynamically.

Note: If there is an SMPCSI DD statement, the **CSI=***dsname* operand is not allowed. If both are specified, SMP/E does **not** run.

DATE=*date*

where *date* can be one of the following:

U or IPL	To use the IPL date of the system.
REPLY	To request the date from the operator. As a result, SMP/E issues message GIM399I.
yyddd	To specify a specific date, where *yy* is the year and *ddd* is the day of the year (the Julian date).

If **DATE** is not specified, the IPL date of the system is used.

LANGUAGE=*xxx*

where *xxx* can be one of the following:

ENU	US English
JPN	Japanese

The LANGUAGE option defines which language to use for SMP/E messages.

LANGUAGE can also be specified as **L**. If **LANGUAGE** is not specified, the default is **LANGUAGE=ENU**.

© Copyright IBM Corp. 1986, 2002

You can specify **LANGUAGE=JPN** only if you have installed the Japanese language feature of SMP/E. If you have installed the Japanese language feature, you can specify **LANGUAGE=ENU** or **LANGUAGE=JPN**. (You do not need to install the English feature along with the Japanese feature.)

The output devices used must support the selected language and English single-byte characters. SMP/E does not check to verify that the output devices provide this support.

PROCESS=WAIT or
PROCESS=END

The PROCESS parameter is used to control how long a job should wait if a CSI or PTS data set is not immediately available because it is currently being used either by another job or by a dialog.

- WAIT causes the job to wait until the data set is available. A message is issued to the system operator every 30 minutes while the job is waiting.
- END causes the job to wait for 10 minutes. If the data set is still not available after the 10-minute wait, the command requiring the data set is stopped.

If **PROCESS** is not specified, the default is **PROCESS=WAIT**.

For more information on obtaining and sharing CSI data sets, see the "Sharing SMP/E Data Sets" appendix in *SMP/E Commands*.

Processing of the PTS data set is also affected by the WAITFORDSN value specified in its DDDEF entry. WAITFORDSN determines whether SMP/E should wait to allocate a data set that is not immediately available. If the DDDEF entry specifies WAITFORDSN=NO (or lets this value default to NO) and the data set is not available, allocation of the data set fails, regardless of the PROCESS value specified on the EXEC statement. If WAITFORDSN=NO, SMP/E does not wait to retry allocation of the data set.

For example, suppose a PTS with a disposition of OLD is already being used by a job, and a second job tries to access the same PTS data set by allocating it through a DDDEF entry. The DDDEF entry used by the second job for the PTS specifies WAITFORDSN=NO. As a result, allocation of the PTS fails for the second job.

DD Statements

DD statements define the data sets that can be used in SMP/E processing. For information on the data sets required for each command, see the chapters on individual SMP/E commands in *SMP/E Commands*.

Note: You can use DDDEF entries, rather than DD statements, to allocate many of the necessary data sets. For more information, see "DDDEF Entry (Distribution, Target, and Global Zone)" on page 177.

Chapter 11. Service Routines

SMP/E provides several service routines:

- GIMCPTS
- GIMDTS
- GIMUNZIP
- GIMXTRX
- GIMZIP

GIMCPTS: SYSMOD Compaction Service Routine

The GIMCPTS service routine is used to compact or expand inline element data within SYSMODs. The inline element data can be compacted prior to receiving a SYSMOD or SYSMODs already received can be compacted.

SYSMODs with their inline element data compacted require less space, so the space requirements of the SMPPTS data set should be reduced. Of course, SMP/E APPLY and ACCEPT processing will expand any compacted inline element data prior to installing the element in a target or distribution library respectively.

GIMCPTS can also be used to expand the inline element data within a SYSMOD. This could be useful if you need to send the SYSMOD to another system where the SMP/E installed on the other system cannot handle compacted inline element data. It could also be useful for viewing inline data. Note that the SMP/E Query Dialogs can be used to view MCS entries from the SMPPTS data set and that SMP/E expands the inline element data before displaying it.

Note: GIMCPTS is a separate load module residing in the MIGLIB library that runs independently from the rest of SMP/E processing.

Calling GIMCPTS

Following are the JCL statements needed to call GIMCPTS:

```
//JOBx     JOB ...
//STEP1    EXEC PGM=GIMCPTS,PARM='options'
//SYSPRINT DD SYSOUT=*
//SYSUT1   DD DSN=aaaaaaaa,DISP=SHR
//SYSUT2   DD DSN=bbbbbbbb,DISP=OLD
```

Figure 80. JCL to Call GIMCPTS

EXEC
is the statement used to call GIMCPTS. The EXEC statement must specify **PGM=GIMCPTS**. The following options may be specified on the EXEC statement PARM operand:

COMPACT
The COMPACT option indicates to GIMCPTS the input data is to be compacted. **COMPACT** is mutually exclusive with **EXPAND**. If neither **COMPACT** nor **EXPAND** is specified, the default is **COMPACT**.

EXPAND
The EXPAND option indicates to GIMCPTS the input data is to be

© Copyright IBM Corp. 1986, 2002

expanded. **EXPAND** is mutually exclusive with **COMPACT**. If neither **EXPAND** or **COMPACT** is specified, the default is **COMPACT**.

LANGUAGE=*xxx*
where *xxx* can be one of the following:

ENU	US English
JPN	Japanese

The LANGUAGE option defines which language to use for GIMCPTS messages. **LANGUAGE** can also be specified as **L**. If **LANGUAGE** is not specified, the default is **LANGUAGE=ENU**.

SYSPRINT
is used by GIMCPTS for messages.

The record format (RECFM) of SYSPRINT must be FBA, and the record length (LRECL) may be either 81 or 121. GIMCPTS will format messages to 80 characters or 120 characters in length, based on the record length of the SYSPRINT data set.

SYSUT1
points to the sequential or partitioned input data. Sequential input data may be a sequential data set or a single member of a partitioned data set. Partitioned input data is an entire partitioned data set (PDS) whose members each contain input data. The actual input data must be the MCS of one or more SYSMODs. The inline element data within the SYSMODs will be either compacted or expanded, as determined by the COMPACT and EXPAND options.

The record format (RECFM) of SYSUT1 must be fixed (F), fixed-block (FB), or fixed-block standard (FBS), and the record length (LRECL) must be 80.

SYSUT2
points to the sequential or partitioned output destination. If the input is sequential, then SYSUT2 must also be sequential. If the input is partitioned, then SYSUT2 must also be partitioned. The output will contain the input SYSMODs with either compacted or expanded inline element data.

The record format (RECFM) of SYSUT2 must be fixed (F), fixed-block (FB), or fixed-block standard (FBS), the record length (LRECL) must be 80, and the BLKSIZE value must be a multiple of 80.

IBM recommends that SYSUT2 be allocated the same size as the original SMPPTS data set. The amount of compaction that can be achieved will vary depending on the content and packaging method of the SYSMOD in the originating SMPPTS data set. For example, if the originating SMPPTS data set contained only functions packaged in RELFILE format, no compaction would occur.

After GIMCPTS is run, you can release the unused space using ISPF (or other methods). You could also specify RLSE on the SPACE parameter of the SYSUT2 data set (if it is being allocated when GIMCPTS is being run) and z/OS will free unused space when it is closed.

Example

Suppose your system has an existing SMPPTS data set that is quite large and requires the space of an entire physical volume. You can use the SMP/E GIMCPTS compaction service routine to compact data within the members of the SMPPTS. In this example, the existing SMPPTS data set is compacted in place. However, a new data set could be allocated and used to receive the compacted data.

```
//JOBx     JOB ...
//COMPACT  EXEC PGM=GIMCPTS,PARM='COMPACT,LANGUAGE=ENU'
//*
//SYSPRINT DD SYSOUT=*
//SYSUT1   DD DSN=SMP.ZOSR1.SMPPTS,DISP=SHR
//SYSUT2   DD DSN=SMP.ZOSR1.SMPPTS,DISP=OLD
```

Figure 81. Sample GIMCPTS jobstream

When this is executed, the GIMCPTS service routine will compact the inline element data within all SYSMOD members in the SMPPTS data set and re-write them to the SMPPTS data set.

Note: You should only attempt to compact a partitioned data set in place if it is a PDSE. If the data set is a simple PDS however, it is likely the data set will get an out of space condition during the operation, unless a large amount of free space is available.

Return Codes

To help you diagnose errors, GIMCPTS issues messages and return codes. The messages are documented in the *SMP/E Messages, Codes, and Diagnosis* manual. Here is a description of the return codes:

Return Code	Meaning
0	The input data was processed successfully.
8	One of the following: • Syntax errors were found in an input SYSMOD. • An unsupported compaction dictionary was used to compact data. • Compacted data is incomplete.
12	One of the following: • Data sets were missing. • Data sets could not be opened. • Data set organization of SYSUT1 and SYSUT2 is not sequential or partitioned. • Data set organizations of SYSUT1 and SYSUT2 did not match. • SYSUT2 data set had incorrect RECFM or LRECL. • SYSUT2 and SYSUT1 data sets are the same data set and they are sequential or members of a PDS. • Directory space for SYSUT2 was exceeded. • Compression and expansion services are not supported.
16	One of the following: • An I/O error occurred. • Syntax error was found on the EXEC statement parameters.
20	SYSPRINT data set is missing.
> 20	Internal error. Report the error to the IBM Support Center.

GIMDTS: Data Transformation Service Routine

Elements may have any of a variety of record formats, depending on how they are meant to be used. However, when elements are packaged inline in a SYSMOD, they must contain fixed-block 80 records. To help you package inline elements, SMP/E provides the GIMDTS service routine. GIMDTS is a background utility

program that transforms data into fixed-block 80 records. For example, it can be used to format inline replacements for data elements. Although GIMDTS is packaged as part of SMP/E, it is a separate load module residing in SYS1.MIGLIB and runs independently from the rest of SMP/E processing.

The input for GIMDTS must meet these requirements:

- It must be a sequential data set or a member of a partitioned data set (PDS).
- It can contain either variable-length or fixed-length records.

The output from GIMDTS is in this format:

- It is a sequential data set or a member of a partitioned data set.
- It has these attributes:

  RECFM=FB
  LRECL=80
  BLKSIZE=a multiple of 80

After using GIMDTS to transform an element into the required format, you can package the transformed data inline in a SYSMOD, following the associated data element MCS. Later, when the element is installed, it is changed back to its original format.

The following sections describe:

- Statements used to call GIMDTS
- Processing done by GIMDTS
- Return codes issued by GIMDTS

Calling GIMDTS

Here are the JCL statements that are required to call GIMDTS:

```
//JOBx     JOB 'account','name',MSGLEVEL=(1,1)
//STEP1    EXEC PGM=GIMDTS
//SYSPRINT DD SYSOUT=A
//SYSUT1   DD DSN=aaaaaaa,DISP=SHR
//SYSUT2   DD DSN=bbbbbbb,DISP=SHR
```

EXEC
is the statement used to call GIMDTS.

SYSPRINT
is used by GIMDTS for messages.

SYSUT1
points to the sequential data set or PDS member containing the data to be transformed.

The record format (RECFM) must be F, FA, FM, FB, FBA, FBM, V, VA, VM, VB, VBA, VBM, VS, or VBS.

SYSUT2
points to the sequential data set or PDS member that will contain the transformed data. This data set must be on DASD.

The record format of this file should be fixed-block (RECFM=FB) with a BLKSIZE value that is a multiple of 80.

Processing

GIMDTS first checks for the required data sets, opens the SYSUT1 and SYSUT2 data sets, and makes sure these data sets have the correct attributes. If necessary, GIMDTS changes the RECFM value of the SYSUT2 data set to FB and the BLKSIZE value to 3200. Next, GIMDTS reads records from the SYSUT1 data set and transforms the data.

After processing the data, GIMDTS writes the output records to the SYSUT2 data set. GIMDTS also issues messages to SYSPRINT indicating the input data set, the output data set, and the return code. If any errors occur during processing, GIMDTS issues messages describing the errors and stops processing. If an abend occurs, normal system abend processing is done.

If SYSUT1 is already fixed-block with LRECL=80 and the data has no ″++″ characters in columns 1 and 2, then the data needs no transformation and is simply copied from SYSUT1 to SYSUT2.

Return Codes

GIMDTS may issue the following return codes:

Return Code	Meaning
00	The input data was processed successfully.
04	The SYSUT2 data set was reblocked.
08	The input data was not processed successfully.
16	An I/O error occurred.

GIMUNZIP File Extraction Service Routine

The GIMUNZIP service routine is used to extract data sets from archive files in GIMZIP packages created by the GIMZIP service routine. These packages typically contain software and associated materials in the form of SYSMODs, RELFILE data sets, HOLDDATA, and other materials such as documentation, samples, and text files. These GIMZIP packages may be transported through a network, processed by the GIMUNZIP service routine, and then processed by the SMP/E RECEIVE command.

More specifically, the GIMUNZIP service routine extracts data sets from the archive files that compose the GIMZIP package. An archive file consists of a portable image of a sequential or partitioned data set and the information needed to create a data set from the portable image.

Notes:

1. GIMUNZIP is a separate load module residing in the MIGLIB library and runs independently from the rest of SMP/E processing.
2. GIMUNZIP optionally requires the Integrated Cryptographic Services Facility (ICSF) One-Way Hash Generate callable service to be available for its use in order to compute an SHA-1 hash value.

Calling GIMUNZIP

The following figure shows the job control statements for GIMUNZIP:

GIMUNZIP

```
//JOBx     JOB ...
//STEP1    EXEC PGM=GIMUNZIP,PARM='options'
//SMPDIR   DD PATH='path',PATHDISP=KEEP
//SMPOUT   DD SYSOUT=*
//SYSPRINT DD SYSOUT=*
//SYSUT3   DD UNIT=SYSALLDA,SPACE=(CYL,(50,10))
//SYSUT4   DD UNIT=SYSALLDA,SPACE=(CYL,(25,5))
//SYSIN    DD *
  package control statements
/*
```

Figure 82. JCL to Call GIMUNZIP

EXEC
is the statement used to call GIMUNZIP. The EXEC statement must specify PGM=GIMUNZIP. The following options may be specified on the EXEC statement PARM operand:

LANGUAGE=*xxx*
where *xxx* can be one of the following:

ENU US English
JPN Japanese

The LANGUAGE option defines the language to use for GIMUNZIP messages. LANGUAGE can also be specified as L. If LANGUAGE is not specified, the default is LANGUAGE=ENU.

HASH=*xxx*
where *xxx* can be one of the following:

YES indicates GIMUNZIP is to perform SHA-1 hash checking for the archive files specified in the SYSIN data set.

Note: GIMUNZIP requires the Integrated Cryptographic Services Facility (ICSF) One-Way Hash Generate callable service to be available in order to compute an SHA-1 hash value.

NO indicates GIMUNZIP is not to perform SHA-1 hash checking for the archive files specified in the SYSIN data set.

HASH can also be specified as H. If HASH is not specified, the default is HASH=NO.

SYSIN
specifies a control data set that contains the package control tags to control GIMUNZIP processing (see “GIMUNZIP Package Control Tags” on page 419). The control data set may be a sequential data set or a single member of a partitioned data set, and its attributes must be LRECL=80 and RECFM=F or FB.

SMPDIR
specifies a directory in the hierarchical file system that contains a GIMZIP package. This directory is referred to as the package directory.

SMPOUT
specifies an output data set that will contain SMP/E messages issued during GIMUNZIP processing. The data set attributes are LRECL=81 or LRECL=121 and RECFM=FBA.

SYSUT3 and SYSUT4
specifies work areas for the IEBCOPY utility to use for spill data sets on DASD.

SYSPRINT
specifies a data set to contain output and messages from the utilities called by GIMUNZIP.

GIMUNZIP Package Control Tags

GIMUNZIP service routine processing is controlled by package control tags. The package control tags identify the archive files to be extracted by GIMUNZIP and are specified in the SYSIN data set. The package control tags follow XML syntax rules and their format is as follows:

GIMUNZIP Package Control Tags

GIMUNZIP:

```
├─<GIMUNZIP>──┬─┬─┬─
```

prefix="*data set prefix*"
specifies a data set prefix to use for the data set to be extracted from the archive file. This prefix replaces the high-level qualifier of the original name for the data set as recorded in the archive's file attribute file. The specified data set prefix can be up to 26-characters long and must conform to standard data set naming conventions.

If neither the **prefix** nor the **newname** attributes are specified, the original name for the data set is used.

Syntax Notes

1. GIMUNZIP ignores columns 73 through 80. If data is specified beyond column 72, GIMUNZIP ignores it, which may lead to the diagnosis of an error in a following tag.
2. Package control tags may contain comments. Comments start with **<!--** (hex 4C5A6060) and end with **-->** (hex 60606E). The first **-->** encountered after the initial **<!--** will end the comment. A comment may precede or follow a tag, but may not appear within a tag.

Example of Using GIMUNZIP

Suppose a GIMZIP package contains a set of archive files and you want to extract the data sets from those archive files. In addition, you wish to verify the integrity of the archive files and rename the data sets in the process. The following job stream can be used to perform such an operation.

```
//JOBx     JOB ...
//STEP1    EXEC PGM=GIMUNZIP,PARM="HASH=YES"
//SMPDIR   DD PATH='/u/smpe/ORDER123/',PATHDISP=KEEP
//SMPOUT   DD SYSOUT=*
//SYSPRINT DD SYSOUT=*
//SYSUT3   DD UNIT=SYSALLDA,SPACE=(CYL,(50,10))
//SYSUT4   DD UNIT=SYSALLDA,SPACE=(CYL,(25,5))
//SYSIN    DD *
<GIMUNZIP>

  <ARCHDEF name="SMPPTFIN/S0001.SAMPLE.FMID001.SMPMCS.pax.Z"
           newname="USERID.FMID001.SMPMCS">
  </ARCHDEF>

  <ARCHDEF name="SMPRELF/SAMPLE.IBM.FMID001.F1.pax.Z"
           newname="USERID.IBM.FMID001.F1">
  </ARCHDEF>

  <ARCHDEF name="SMPRELF/SAMPLE.IBM.FMID001.F2.pax.Z"
           newname="USERID.IBM.FMID001.F2">
  </ARCHDEF>

  <ARCHDEF name="S0004.SAMPLE.ORDER123.DOCLIB.pax.Z"
           newname="USERID.ORDER123.DOCLIB">
  </ARCHDEF>

  <ARCHDEF name="S0005.SAMPLE.ORDER123.RIMLIB.pax.Z"
           newname="USERID.ORDER123.RIMLIB">
  </ARCHDEF>

</GIMUNZIP>
/*
```

Figure 83. GIMUNZIP Example

Note: Blank lines and spaces have been added to the package control tags for clarity, but are not required.

GIMUNZIP Processing

The GIMUNZIP service routine extracts data sets from the archive files that compose the GIMZIP package. An archive file consists of a portable image of a sequential or partitioned data set and the information needed to reload the data from the portable image (see “Archive Files” on page 439 for details on archive file contents and construction).

GIMUNZIP uses the UNIX System Services **pax** command to expand the following component files from an archive file temporarily into the hierarchical file system:

1. the portable image of the original data set, and
2. the file attribute file that contains the information necessary to reload the data from the archived data set.

GIMUNZIP then reads the file attribute file and uses the information recorded there, along with information specified on the **<ARCHDEF>** tag, such as **volume**, **newname**, or **prefix**, to allocate a new data set. The portable image of the original data set is stored in this new data set.

If the HASH=YES option was specified, then GIMUNZIP performs SHA-1 hash checking for the archive files. Specifically, GIMUNZIP reads the package attribute file for the package. The package attribute file, GIMPAF.XML, is found in the package directory, and contains the known hash values for the archives. These hash values were recorded by GIMZIP when the package and archives were created. GIMUNZIP then uses ICSF services to compute the current hash values for the archive files, and compares this value to the known hash values for the archive files.

If the computed hash value matches the known hash value, then the integrity of the archive file is ensured. However, if the computed hash value does not match the known hash value, GIMUNZIP stops processing for the archive file. This condition indicates the archive file has been corrupted since it was produced by GIMZIP when the package was created.

Sample RECEIVE Job for GIMUNZIP Output

After GIMUNZIP has been run, the SMP/E RECEIVE command can be used to process the data sets extracted by GIMUNZIP. Here is a sample RECEIVE job that would process the SMPMCS and RELFILE data sets extracted by GIMUNZIP in the sample in Figure 2:

```
//JOBx     JOB ...
//STEP1    EXEC PGM=GIMSMP
//SMPCSI   DD DSN=SMPE.GLOBAL.CSI,DISP=SHR
//SMPPTFIN DD DSN=USERID.FMID001.SMPMCS,DISP=SHR
//SMPCNTL  DD *
  SET BDY(GLOBAL).
  RECEIVE SYSMODS
          RFPREFIX(USERID).
/*
```

Figure 84. Sample RECEIVE Job for GIMUNZIP

Return Codes

GIMUNZIP may end with the following return codes:

Return Code	Meaning
00	The input data was processed successfully.
04	A call to a system service may not have completed successfully.
12	One of the following: • Required file attributes could not be obtained. • Input data sets were not sequential or partitioned. • Call to a required system service failed. • Syntax errors in the SYSIN data set. • Data sets could not be opened. • SMPDIR was not allocated to an HFS directory. • Data sets were missing. • Required modules could not be loaded.
16	One of the following: • An I/O error occurred. • A syntax error was found on the EXEC statement parameters.
20	SMPOUT data set is missing.
> 20	Internal error. Report the error to the IBM Support Center.

GIMXTRX Service Routine

GIMXTRX is intended for use as part of an offering called ShopzSeries. It provides two basic functions:

List Target Zone Names (LSTTZN)
Generate a list of target zone names associated with a given GLOBAL zone SMPCSI data set name.

Create a BITMAP of an SMPCSI (BMPTZN)
Generate a BITMAP representation of FUNCTION and PTF SYSMODs found in a given list of target zone names associated with a given GLOBAL zone SMPCSI data set name.

The input to GIMXTRX is the name of a data set that contains the input parameters. See “Input Parameter Data Set Contents” on page 423.

The results of each function is written to a data set created by GIMXTRX. See “Processing” on page 425.

Note: GIMXTRX is a separate load module residing in the MIGLIB library and runs independently from the rest of SMP/E, and is executable on a z/OS, OS/390, or MVS system; it will not run on VM.

Calling GIMXTRX

GIMXTRX has normal standard linkage and expects an input parameter that is a character string that is a data set name. Following are the JCL statements needed to call GIMXTRX:

```
//JOBx     JOB ...
//XTRX EXEC PGM=GIMXTRX,PARM='parmdsn'
//SYSTSPRT DD SYSOUT=(*),HOLD=YES
```

Figure 85. JCL to call GIMXTRX

EXEC
is the statement used to call GIMXTRX. The EXEC statement must specify PGM=GIMXTRX. The following option must be specified on the EXEC statement PARM operand:

parmdsn
name of the data set that contains the input parameters required for the GIMXTRX function. See “Input Parameter Data Set Contents” for a description of the data contained in the input parameter data set.

SYSTSPRT
is used by GIMXTRX for messages. The record format (RECFM) of SYSTSPRT must be FBA, and the record length (LRECL) must be 121. GIMXTRX will format messages to 120 characters in length.

Note: GIMXTRX messages are only issued in the U.S. English language.

Input Parameter Data Set Contents

The input parameter data set is a fixed-block 80-byte record sequential data set. Each input parameter consists of a keyword and an associated value. The rules for the input parameter data set are as follows:

- There must be one keyword with its associated parameter data per 80-byte record.
- All keywords must begin in column one of the records.
- No blanks are allowed after the keyword and before the equal sign
- No blanks are allowed after the equal sign and before the first parameter value
- Any data read from the input parameter data set that is not a recognized keyword parameter is ignored and processing continues.

The keywords and parameters passed to the GIMXTRX program are as follows:

GIMXTRX Input Parameters

SUFFNC Keyword:

```
├─SUFFNC=──┬─LSTTZN─┬──────────────────────────────────────────────┤
          └─BMPTZN─┘
```

SUFGBL Keyword:

```
├─SUFGBL=globaldsn──────────────────────────────────────────────────┤
```

SUFVOL Keyword:

```
├─SUFVOL=volume─────────────────────────────────────────────────────┤
```

SUFTGT Keyword:

```
                ┌──────────────┐
                ▼              │
├─SUFTGT=──────tzone name──────┴──────────────────────────────────────┤
```

SUFFNC
This is the name of the function to be processed by the GIMXTRX program. The two allowable values are

LSTTZN
Generate a list of target zone names.

BMPTZN
Create a BITMAP of a set of target zones.

This is a required parameter.

There can only be one function executed per invocation of GIMXTRX.

SUFGBL
This is the data set name containing the GLOBAL zone to be processed. This parameter is 44 characters long. This is a required parameter.

SUFVOL
This is the work volume used to allocate the output data set. The value is six characters long, and must be a valid MVS volume name. This is an optional parameter.

If no volume is specified, GIMXTRX will attempt to allocate the output data set without a volume serial.

SUFTGT
This is the list of target zone names that will be queried. Each target zone name is 7 characters long separated by one blank space. If a target zone name is less than 7 characters long it must be left-justified and padded with blanks.

Each SUFTGT record can contain up to nine target zones. This is a required parameter when SUFFNC=BMPTZN. It is not required when SUFFNC=LSTTZN.

There can be multiple instances of the SUFTGT record to allow for situations where a single 80-byte record cannot contain the required input data.

Processing

GIMXTRX obtains the input parameter data set name from the PARM value passed to it on the EXEC statement.

GIMXTRX then constructs the name of the output data set using the input parameter data set name as a base. The last qualifier of the input parameter data set name is changed to 'OUT' and this becomes the name of the output data set. For example, if the input parameter data set name is TEST.GIMXTRX.DATA.IN, the output data set name will be TEST.GIMXTRX.DATA.OUT.

The output data set is allocated and cataloged as follows:

```
DSNAME=dsn.OUT
DSORG=PS
RECFM=FB
LRECL=12560
BLKSIZE=0
SPACE=(TRK,(10,1),RLSE)
UNIT=SYSALLDA
VOLUME=volume name (supplied as SUFVOL= on input).
```

Since GIMXTRX will attempt to create the output data set, it must not exist at the time that GIMXTRX is initiated. If there is no volume supplied as input, GIMXTRX will attempt the allocation without a volume serial. When this occurs, GIMXTRX still uses ″UNIT=SYSALLDA″.

GIMXTRX then allocates and opens all of the required data sets and extracts the input parameters from the input parameter data set.

Once the input parameters have been read and the output data set created, GIMXTRX continues processing based on the function requested (LSTTZN or BMPTZN).

List Target Zone Names (LSTTZN)

This function of GIMXTRX produces a list of target zone names associated with a given GLOBAL zone SMPCSI data set name. The results are written to the output data set.

Inputs: The inputs to the List Target Zone Names function are:

SUFFNC
: Name of the function to be executed (LSTTZN)

SUFGBL
: GLOBAL zone SMPCSI data set name

SUFVOL
: VOLUME to be used for output data set (optional)

A sample of the parameters contained in the input parameter data set for the List Target Zone Names function is:

```
         1         2         3         4         5         6         7         8
----+----0----+----0----+----0----+----0----+----0----+----0----+----0----+----0----+----0
SUFFNC=LSTTZN
SUFGBL=TEST.GLOBAL.VSAM.CSI
SUFVOL=VOL111
```

Figure 86. Sample Input Parameter Data Set for Function LSTTZN

Using the SMP/E GIMAPI, GIMXTRX obtains the names of all of the target zones associated with the specified global zone. GIMXTRX then writes the list of target zone names to the output data set in 12560-byte records defined as follows:

Field **Description**

header
60-byte header character string starting with the literal ″TARGETZN″ in upper case. The remaining 52 bytes are set to blanks.

Target Zone Name list
7-character target zone names each separated by one blank space, up to 12500 bytes in length. For target zone names that are less than 7 characters long, the field is left-justified and padded to the right with blanks. When the list is less than 12500 bytes long, the remaining bytes contain blanks.

Example of a Target Zone Name Record: The following example indicates an SMPCSI that has target zones MVST1, JESTGT1, CICTGA, DB2TG2.

```
         1         2         3         4         5         6         7         8         9
----+----0----+----0----+----0----+----0----+----0----+----0----+----0----+----0----+----0

TARGETZN                                                MVST1   JESTGT1 CICTGA  DB2TG2
```

Figure 87. TARGETZN Record

Create a BITMAP of an SMPCSI (BMPTZN)

This function of GIMXTRX produces a BITMAP representation of the PTF service present in a user's SMPCSI. This information is intended for shipment to IBM where it can be analyzed to create a custom-built service package to be delivered to the user over the internet.

The intent of the Create a BITMAP of an SMPCSI function is to identify and record in a set of BITMAP records:

- All FMIDs and PTFs applied in the target zones identified in the input data set (SUFTGT parameter).
- All PTFs received in the GLOBAL zone identified in the input data set (SUFGBL parameter) that are associated with the FMIDs applied in the specified target zones.

A PTF is considered applicable to a target zone if its FMID is applied in that target zone. If a PTF is applied in all selected target zones to which it is applicable, it is recorded in a BITMAP record. If a PTF is not applied in all of the selected target zones to which it is applicable, then it is not recorded in a BITMAP record. For example, if an FMID is applied in 4 of the selected target zones, but a PTF associated with that FMID is applied in only 3 of those zones, the PTF is not recorded in the BITMAP record.

All PTFs that are received in the GLOBAL zone are checked against the FMIDs applied in the selected target zones to determine if the PTFs are associated with the applied FMIDs. All PTFs received in the GLOBAL zone that are applicable to the FMIDs applied in the selected target zones are recorded in a BITMAP record.

Inputs: The inputs to the Create a BITMAP of an SMPCSI function are:

SUFFNC
Name of the function to be executed (BMPTZN)

SUFGBL
GLOBAL zone SMPCSI data set name

SUFVOL
VOLUME to be used for output data set (optional)

SUFTGT
Target zone names selected by the user

A sample of the input parameters contained in the input parameter data set for the create a BITMAP of an SMPCSI function is:

```
         1         2         3         4         5         6         7         8
----+----0----+----0----+----0----+----0----+----0----+----0----+----0----+----0

SUFFNC=BMPTZN
SUFGBL=TEST.GLOBAL.VSAM.CSI
SUFVOL=VOL111
SUFTGT=TARGET1 TGT2    TARGET3 TGT4    TARGET5 TARGET6 TGT7
```

Figure 88. Sample Input Parameter Data Set for Function BMPTZN

The output records created by GIMXTRX for the BMPTZN function represent the functions applied in the target zones selected by the user (PRODLIST record) and the PTFs that are either applied or received (BITMAP records). GIMXTRX then writes the PRODLIST and BITMAP records to the output data set in 12560-byte records defined as follows:

PRODLIST Record: The PRODLIST record contains the list of FMIDs applied in the target zones identified by the user in the input data set. Following is the definition of the PRODLIST record that is placed in the output data set by GIMXTRX.

PRODLIST Record

Field Description

header
60-byte header starting with the literal ″PRODLIST″ in upper case. The remaining 52 bytes are set to blank.

FMID list
list of 7-character FMIDs each separated by one blank space. This field is 12500 bytes long. When the FMID list is less than 12500 bytes long, the remaining bytes will be made blanks.

The following example of a PRODLIST record indicates an SMPCSI that has FMIDs HBB6602, HMP1B00, JMP1B01 present.

```
         1         2         3         4         5         6         7         8
----+----0----+----0----+----0----+----0----+----0----+----0----+----0----+----0----+

PRODLIST                                                 HBB6602 HMP1B00 JMP1B01
```

Figure 89. PRODLIST Record

The PRODLIST record will be placed before any BITMAP bitstring records in the output data set.

BITMAP Records: The BITMAP records represent the PTFs applied in the target zones or received in the GLOBAL zone that are associated with the FMIDs listed in the PRODLIST record.

The BITMAP bitstring logic is based on the following PTF naming convention:

- PTF names are architected by IBM to consist of a 2 character prefix followed by 5 decimal digits providing 100000 possible PTF numbers per prefix (00000-99999).
- A BITMAP bitstring record simply contains 100000 bits and a 2-character PTF prefix in the record header.
- For example, if the prefix is ″UR″, then the first bit in the bitstring represents PTF UR00000, the second bit represents PTF UR00001, the third represents PTF UR00002 and so on. The last bit in the bitstring represents UR99999.
- The bits representing the UR<pv>nnnnn</pv> PTF numbers received or applied on the customer system are turned on while the remaining bits are set to zero.
- One bitstring is required for each PTF prefix in the SMPCSI

Following is the definition of the BITMAP records that are placed in the output data set by GIMXTRX.

BITMAP bitstring Record

Field **Description**

header
60-byte header starting with the literal ″BITPTF″ in upper case, followed by the 2-character PTF prefix for each unique PTF prefix present in the zones being queried. This field is in upper case. The remaining 52 bytes in the header are set to blank.

bitstring
12500 bytes with 100000 bits representing PTF numbers present in the SMPCSI associated with the two-character PTF prefix in this record. A bit is set on to indicate a PTF number exists. All remaining bit positions are set to zero.

The following example of a BITMAP bitstring record indicates an SMPCSI that has PTFs UR00001 and UR00005 present.

```
         1         2         3         4         5         6         7         8
----+----0----+----0----+----0----+----0----+----0----+----0----+----0----+----0----+----0

BITPTFUR                                                   bitstring...........
```

Figure 90. BITMAP Record

The bitstring section of the BITMAP record is expanded as follows (where each mark of the scale line represents one bit position of the BITMAP record):

```
6       6       6       6       6       6       6       6       6       7
1-------2-------3-------4-------5-------6-------7-------8-------9-------0

01000100000000000000000000000000000000000000000000.........................
```

Figure 91. Bitstring Section of BITMAP Record

Return Codes

To help you diagnose errors, GIMXTRX issues messages and return codes. The messages are documented in *SMP/E Messages, Codes, and Diagnosis*.

All non-zero return codes indicate unsuccessful completion of GIMXTRX. Here is a description of the return codes:

Return Code
Meaning

0 The requested GIMXTRX function was processes successfully.

4 A warning condition was encountered in a program called by GIMXTRX.

8 An error condition was encountered in a program called by GIMXTRX.

12 One of the following
- A required parameter is missing or incorrect.
- An allocation error occurred.
- An I/O error occurred.
- An error occurred while opening or closing a data set.
- GIMXTRX could not load either GIMAPI, GIMSGENU, or GIMKXENU.
- SMP/E could not obtain enough storage for processing.

If an error occurs with SYSTSPRT, there will be no message issued. Only a return code will be returned through standard linkage.

GIMXTRX does not provide an ESTAE routine for recovery when an ABEND occurs. Normal system ABEND processing occurs.

GIMZIP Packaging Service Routine

The GIMZIP service routine creates portable packages of software and associated materials. Typically the packages will contain SYSMODs, RELFILE data sets, HOLDDATA, and associated materials such as documentation, samples, and text files. These GIMZIP packages may be transported through a network, processed by the GIMUNZIP service routine, and then processed by the SMP/E RECEIVE command.

More specifically, a GIMZIP package consists of a single package definition file, a set of archive files and text files. The package definition file describes the total package and identifies the archive files and text files contained in the package. An archive file consists of a portable image of a sequential or partitioned data set and the information necessary to reload the data from the portable image. A single GIMZIP package typically consists of several archive files.

Notes:

1. GIMZIP is a separate load module residing in the MIGLIB library and runs independently from the rest of SMP/E processing.
2. GIMZIP requires the Integrated Cryptographic Services Facility (ICSF) One-Way Hash Generate callable service to be available for its use in order to compute an SHA-1 hash value.

Calling GIMZIP

The following figure shows the job control statements for GIMZIP:

```
//JOBx     JOB ...
//STEP1    EXEC PGM=GIMZIP,PARM='option'
//SMPDIR   DD PATH='path',PATHDISP=KEEP
//SMPOUT   DD SYSOUT=*
//SYSPRINT DD SYSOUT=*
//SYSUT2   DD UNIT=SYSALLDA,SPACE=(CYL,(200,20))
//SYSUT3   DD UNIT=SYSALLDA,SPACE=(CYL,(50,10))
//SYSUT4   DD UNIT=SYSALLDA,SPACE=(CYL,(25,5))
//SYSIN    DD *
  package control tags
/*
```

Figure 92. JCL to Call GIMZIP

EXEC
is the statement used to start GIMZIP. The EXEC statement must specify PGM=GIMZIP. The following option may be specified on the EXEC statement PARM operand:

LANGUAGE=*xxx*
where *xxx* can be one of the following:

ENU	US English
JPN	Japanese

The LANGUAGE option defines which language to use for GIMZIP messages. LANGUAGE can also be specified as L. If LANGUAGE is not specified, the default is LANGUAGE=ENU.

SYSIN
specifies a control data set that contains the package control tags to direct GIMZIP processing (see “GIMZIP Package Control Tags” on page 431). The control data set may be a sequential data set or a single member of a partitioned data set and its attributes must be LRECL=80 and RECFM=F or FB.

SMPDIR
specifies a directory in the hierarchical file system that is to contain the package created by GIMZIP. All files and archives created by GIMZIP are stored in this directory. This directory is referred to as the package directory.

The package directory must be empty at the start of GIMZIP processing. If any files, including a previous package, already exist in the package directory, you

must move them to another directory, delete them, or specify a different directory on the SMPDIR DD statement for the package directory.

SMPOUT
specifies an output data set that will contain SMP/E messages issued during GIMZIP processing. The data set attributes are LRECL=81 or LRECL=121 and RECFM=FBA.

SYSUT2
specifies a work area for the IEBCOPY utility to use for the sequential unload data sets placed on DASD as the result of an IEBCOPY unload operation. This data set must be large enough to accommodate the largest partitioned data set being processed by the current execution of GIMZIP.

SYSUT3 and SYSUT4
specifies work areas for the IEBCOPY utility to use for spill data sets on DASD.

SYSPRINT
specifies a data set to contain output and messages from the utilities called by GIMZIP.

GIMZIP Package Control Tags

GIMZIP service routine processing is controlled by package control tags. The package control tags define the GIMZIP package to be created and are specified in the SYSIN data set. The package control tags follow XML syntax rules and their format is as follows:

GIMZIP Package Control Tags

GIMZIP:

```
├─<GIMZIP──┬──────────────────────────────────┬──>──┬──┬──┬
```

<FILEDEF> Tag Syntax

The **<FILEDEF>** and corresponding **</FILEDEF>** tags identify the beginning and end of a file definition. Each file described by a **<FILEDEF>** tag is input to GIMZIP and is to be a component of the GIMZIP package. The following attributes may be found on the **<FILEDEF>** tag:

name="*file name*"
: specifies the data set name of a data set that is to be a component of the GIMZIP package. The specified data set name can be up to 44-characters long and must conform to standard data set naming conventions.

description="*file description*"
: specifies a text description for the file. The description can be up to 500-characters long.

type="*file type*"
: specifies a file type indicator that describes the contents of the file, identifies how the file is to be processed by GIMZIP, and also how the file will be processed by the SMP/E RECEIVE command. Any of the following values may be specified:

README indicates the data set specified on the **name** attribute is a sequential data set containing text. The intent is for this file to be viewable once the GIMZIP package is constructed.

SMPHOLD indicates the data set specified on the **name** attribute is a sequential data set containing SMP/E HOLDDATA statements.

SMPPTFIN indicates the data set specified on the **name** attribute is a sequential data set containing SMP/E modification control statements (MCS).

SMPRELF indicates the data set specified on the **name** attribute is an SMP/E RELFILE data set associated with a SYSMOD contained in the SMPPTFIN file. Data sets with the SMPRELF file type must be either a partitioned data set or an IEBCOPY unloaded sequential image of a partitioned data set.

If the **type** attribute is not specified, then the data set specified on the **name** attribute can be either sequential or partitioned.

volume="*file volume*"
: specifies the volume serial number of the volume containing the data set specified on the **name** attribute. The volume identifier must be from 1 to 6 alphanumeric characters and should be specified only if the data set is uncataloged.

Syntax Notes

1. GIMZIP ignores columns 73 through 80. If data is specified beyond column 72, GIMZIP ignores it, which may lead to the diagnosis of an error in a following tag.
2. Package control tags may contain comments. Comments start with **<!--** (hex 4C5A6060) and end with **-->** (hex 60606E). The first **-->** encountered after the initial **<!--** will end the comment. A comment may precede or follow a tag, but may not appear within a tag.

Example of Using GIMZIP

Suppose a GIMZIP package is to be created containing the following data sets:

- SAMPLE.FMID001.SMPMCS - an SMP/E MCS file

- SAMPLE.IBM.FMID001.F1 - An SMP/E PDS relative file
- SAMPLE.IBM.FMID001.F2 - An SMP/E PDSE relative file
- SAMPLE.ORDER123.DOCLIB - A PDS containing documents
- SAMPLE.ORDER123.RIMLIB - A PDS containing related installation materials
- SAMPLE.ORDER123.README - A sequential text data set containing a README file.

The following job stream can be used to create such a GIMZIP package:

```
//JOBx     JOB ...
//STEP1    EXEC PGM=GIMZIP
//SMPDIR   DD PATH='/u/smpe/GIMZIP/ORDER123/',PATHDISP=KEEP
//SMPOUT   DD SYSOUT=*
//SYSPRINT DD SYSOUT=*
//SYSUT2   DD UNIT=SYSALLDA,SPACE=(CYL,(200,20))
//SYSUT3   DD UNIT=SYSALLDA,SPACE=(CYL,(50,10))
//SYSUT4   DD UNIT=SYSALLDA,SPACE=(CYL,(25,5))
//SYSIN    DD *
<GIMZIP description="This is a sample software package.">
  <FILEDEF name="SAMPLE.FMID001.SMPMCS"
           description="This is the SMPMCS file for FMID001."
           type="SMPPTFIN">
  </FILEDEF>

  <FILEDEF name="SAMPLE.IBM.FMID001.F1"
           description="This is SMP/E RELFILE 1 for FMID001."
           type="SMPRELF">
  </FILEDEF>

  <FILEDEF name="SAMPLE.IBM.FMID001.F2"
           description="This is SMP/E RELFILE 2 for FMID001."
           type="SMPRELF">
  </FILEDEF>

  <FILEDEF name="SAMPLE.ORDER123.DOCLIB"
           description="This is the Document Library for the package.">
  </FILEDEF>

  <FILEDEF name="SAMPLE.ORDER123.RIMLIB"
           description="This is the Related Installation Materials
                        Library for the package.">
  </FILEDEF>

  <FILEDEF name="SAMPLE.ORDER123.README"
           description="This is the README file for the package."
           type="README">
  </FILEDEF>

</GIMZIP>
/*
```

Figure 93. GIMZIP Example

Note: Blank lines and spaces have been added to the package control tags for clarity, but are not required.

GIMZIP Processing

The GIMZIP service routine processes sequential and partitioned (PDS and PDSE) data sets as input to create GIMZIP packages. The packages produced are stored in the package directory in the hierarchical file system. The package directory is specified by the SMPDIR DD statement.

GIMZIP collects various attributes for the input data sets specified in the package control tags. These attributes, along with portable images of the input data sets, are temporarily stored in the hierarchical file system. These images are then archived and compressed to create archive files. Each GIMZIP package will contain one or more archive files.

For each package there are two additional files:

- The package attribute file, which describes the contents of the package itself. The package attribute file identifies the archives for a package and contains a hash value for each archive within the package. The hash value for each archive is used for data integrity purposes and can be checked when the original data set is re-created from the archive using the GIMUNZIP service routine.
- An extensible stylesheet language (XSL) file, which describes how to format the information found in the package attribute file. The XSL file is used for rendering (displaying on a browser) the package attribute file.

Package Attribute File

Each package contains a package attribute file. The name of this file is **GIMPAF.XML** and it is stored in the package directory identified by the SMPDIR DD statement. The file contains package definition control tags that describe the contents of the package and how the package was created. The package definition control tags follow XML syntax rules; their format is as follows:

Package Definition Control Tags

PKGDEF:

```
├──<PKGDEF──┬──────────────────────────────────────┬──┬──────────────────────┬──┬──────────────────────┬──►
            └─description="package description"─┘  └─level="vv.rr.mm.pp"─┘  └─date="yyyy.ddd"─┘

►──┬──────────────────┬──┬──────────────────┬──┬──────────────────────┬──────────────────────────────►
   └─gmt="hh:mm:ss"─┘  └─files="nnnn"─┘  └─size="package size"─┘

►──┬──────────────────────────────────────┬──>──┬──────────┬──┬──────────┬──────────────────────────┤
   └─originalsize="original package size"─┘     │ ARCHDEF  │  │ ARCHDEF  │  </PKGDEF>──
                                                └──────────┘  └──────────┘
```

ARCHDEF:

```
├──<ARCHDEF──name="archive name"──┬──────────────────────────────────────┬──►
                                  └─description="archive description"─┘

►──┬──────────────────────────┬──┬──────────────────────┬──┬──────────────────────────────────────┬──►
   └─type="──┬─README─────┬─"─┘  └─size="archive size"─┘  └─originalsize="original file size"─┘
             ├─SMPHOLD────┤
             ├─SMPPTFIN───┤
             └─SMPRELF────┘

►──hash="archive hash value"──>──</ARCHDEF>──────────────────────────────────────────────────────┤
```

PKGHASH:

```
├──<?PKGHASH──hash="package hash value"──?>──────────────────────────────────────────────────────┤
```

<PKGDEF> Tag Syntax

The **<PKGDEF>** and corresponding **</PKGDEF>** tags identify the beginning and end of a GIMZIP package definition. The following attributes may be found on the **<PKGDEF>** tag:

description="*package description*"
: specifies a text description for the package. The value GIMZIP places here, is the same as the description value, if specified, on the input **<GIMZIP>** tag.

level="*vv.rr.mm.pp*"
: indicates the service level of the GIMZIP service routine used to create this package. The individual values are as follows:

vv	version
rr	release
mm	modification level
pp	PTF level

date="*yyyy.ddd*"
: indicates the year and Julian day on which the package was created by the GIMZIP service routine.

gmt="*hh:mm:ss*"
indicates the time at which the package was created by the GIMZIP service routine. The time value is expressed as Greenwich Mean Time (GMT).

files="*nnnn*"
indicates the total number of files that compose the package. This number includes all archives, and any and all control files, such as the Package Attribute File.

originalsize="*original package size*"
indicates the sum of all the values of *originalsize* attributes on ARCHDEF tags in this package definition. It is used to determine the amount of auxiliary storage required to retrieve all the archives in this package.

size="*package size*"
indicates the total size of the package, in bytes. This size is the sum of the sizes of all files that compose the package.

<ARCHDEF> Tag Syntax

The **<ARCHDEF>** and corresponding **</ARCHDEF>** tags identify the beginning and end of a specific archive retrieval request. The following attributes may be found on the **<ARCHDEF>** tag:

name="*archive name*"
specifies the path name for an archive file in the GIMZIP package. The path name value is a relative value and it is relative to the package directory specified on the SMPDIR DD statement.

description="*archive description*"
specifies a text description for the archive. The value GIMZIP produces is copied from the description value, if specified, on the corresponding input **<FILEDEF>** tag.

type="*file type*"
specifies an archive type indicator that describes the contents of the archive and how the file will be processed by the SMP/E RECEIVE command. The value is copied from the file type value, if specified, on the corresponding **<FILEDEF>** statement, and may be any of the following values:

README indicates the archive contains text data.

SMPHOLD indicates the archive contains SMP/E HOLDDATA statements.

SMPPTFIN indicates the archive contains SMP/E modification control statements (MCS).

SMPRELF indicates the archive contains an SMP/E RELFILE data set associated with a SYSMOD contained in the SMPPTFIN file.

originalsize="*original file size*"
indicates the total size, in bytes, of the original file or data set stored in the archive file.

size="*archive size*"
indicates the total size of the archive file, in bytes.

hash="*archive hash*"
indicates an SHA-1 hash value for the archive file.

<?PKGHASH> Tag Syntax

hash="*package hash*"
indicates an SHA-1 hash value for the information in the package attribute file between the starting **<PKGDEF>** tag and the ending **</PKGDEF>** tag.

Syntax Notes

1. Data in columns 73 through 80 is ignored. If data is specified beyond column 72, it is ignored and an error in a following tag may be indicated.
2. Package definition control tags may contain comments. Comments start with **<!--** (hex 4C5A6060) and end with **-->** (hex 60606E). The first **-->** encountered after the initial **<!--** will end the comment. A comment may precede or follow a tag, but may not appear within a tag.

Package Attribute File Example

The package attribute file for the package produced by GIMZIP in Figure 93 on page 433 would look like the following:

```
<?xml version="1.0" ?>
<?xml-stylesheet type="text/xsl" href="GIMPAF.XSL" ?>
<PKGDEF level="02.07.35"
        date="2001.241"
        gmt="14:39:05"
        files="8"
        size="1216012"
        originalsize="1745920">

  <ARCHDEF name="SMPPTFIN/S0001.SAMPLE.FMID001.SMPMCS.pax.Z"
           type="SMPPTFIN"
           description="This is the SMPMCS file for FMID001."
           size="42160"
           originalsize="112640"
           hash="C2326430D2D458713D307F70C7CFA59EA08CE6D7">
  </ARCHDEF>
```

Figure 94. Package Attribute File (GIMPAF.XML) Example (Part 1 of 2)

```
  <ARCHDEF name="SMPRELF/SAMPLE.IBM.FMID001.F1.pax.Z"
           type="SMPRELF"
           description="This is SMP/E RELFILE 1 for FMID001."
           size="123456"
           originalsize="281600"
           hash="FBF458413B2326430D3047A0C23264646430E6F4">
  </ARCHDEF>

  <ARCHDEF name="SMPRELF/SAMPLE.IBM.FMID001.F2.pax.Z"
           type="SMPRELF"
           description="This is SMP/E RELFILE 2 for FMID001."
           size="345678"
           originalsize="450560"
           hash="A2F758A0C23264730D307F70B7BFA59EA08BE6B7">
  </ARCHDEF>

  <ARCHDEF name="S0004.SAMPLE.ORDER123.DOCLIB.pax.Z"
           description="This is the Document Library for the package."
           size="15678"
           originalsize="56320"
           hash="B2326730F2F758713D30A0C232643264326430D8">
  </ARCHDEF>

  <ARCHDEF name="S0005.SAMPLE.ORDER123.RIMLIB.pax.Z"
           description="This is the Related Installation Materials
                        Library for the package."
           size="678912"
           originalsize="844800"
           hash="D607F70C7C32643FA59EA0C20D2D4587138CE6A6">
  </ARCHDEF>

  <ARCHDEF name="S0006.SAMPLE.ORDER123.README"
           type="README"
           description="This is the README file for the package."
           size="2048"
           hash="EA59EA0C2D307F70C7C326430D2D4587138CE6B2">
  </ARCHDEF>

  <ARCHDEF name="GIMPAF.XSL"
              description="This is an Extensible Stylesheet Language
              (XSL) document used to render the Package Attribute File
              (GIMPAF.XML) on an internet browser.  This file has not
              been archived and should not be included on the input
              control statements for GIMUNZIP processing."
              size="4720"
              hash="3EC6A7064CDCAAB6A5683A82DA7485F7E261E4B3">
  </ARCHDEF>

</PKGDEF>
<?PKGHASH hash="D30412326430F4FBF4584130B4BFA59EA08BE6D4" ?>
```

Figure 94. Package Attribute File (GIMPAF.XML) Example (Part 2 of 2)

Note: Blank lines and spaces have been added to the package attribute file for clarity, but are not necessarily produced by the GIMZIP service routine, nor are they required.

Displaying the Package Attribute File

The package attribute file (GIMPAF.XML) can be rendered on an internet browser that supports XML and XSL (for example, Microsoft® Internet Explorer 5). The package directory containing the package attribute file must be accessible to the browser through your z/OS web server. The accessibility of the package directory is determined by your specific web server configuration.

For example, suppose */u/userid/public/* is defined by your z/OS web server to be your publicly accessible directory. Further suppose, to view the contents of this directory, you must specify an URL of the form **http://***host name/~userid*. Then, in order to view the package attribute file, your package directory must be contained within the */u/userid/public/* directory, or a symbolic link that points to the package directory must be in the */u/userid/public/* directory in the hierarchical file system. Furthermore, your z/OS web server must be configured to recognize **.XML** and **.XSL** as text MIME types and, if appropriate, convert EBCDIC text to ASCII text.

The package attribute file can then be viewed on an internet browser by entering an URL similar to the following:

http://*host name*/*~userid*/**GIMPAF.XML**

Archive Files

The actual software and associated materials for a package are stored in archive files. GIMZIP creates an archive file for each input data set specified by a **<FILEDEF>** tag. An archive file consists of a portable image of the original data set and attributes of the original data set needed to reload the data from the portable image.

The portable image of the original data set is stored temporarily as a file in the hierarchical file system. Similarly, the attributes of the original data set are recorded in a file attribute file in the hierarchical file system. The name of the file attribute file is **GIMFAF.XML**. An archive file is then created by using the UNIX System Services **pax** command to combine the two files into an archive.

Data sets with a type of **README** are an exception to the archive processing described above. README data sets have no file attribute file and are not archived using **pax**, but rather are stored unchanged in a file in the package directory.

When archive files are written to the package directory, GIMZIP uses a particular naming convention for the files. The absolute path name for the archive files is of the following format:

/package_directory/filetype/Snnnn.original_data_set_name.pax.Z

package_directory
indicates the package directory specified on the SMPDIR DD statement.

filetype
indicates the subdirectory into which the archive file is stored. GIMZIP creates up to three subdirectories as follows:

SMPPTFIN
created to contain archives for files with a specified file type of **SMPPTFIN**.

SMPHOLD
created to contain archives for files with a specified file type of **SMPHOLD**.

SMPRELF
created to contain archives for files with a specified file type of **SMPRELF**.

All archive files without a specified file type, and those with a file type of **README**, are stored in the package directory without a **filetype** subdirectory specification.

Snnnn
specifies the sequence indicator for the archive file. The sequence indicator is necessary so the correct order can be determined for the SMPHOLD and SMPPTFIN files when eventually processed by the SMP/E RECEIVE command. GIMZIP processes the input data sets in the sequence in which they are specified in the package control tags and the indicator is assigned accordingly. All archive files, except those specified with a file type of **SMPRELF**, are assigned a sequence indicator.

original_data_set_name
specifies the original data set name as indicated on the **name** attribute of the **<FILEDEF>** tag.

pax.Z
is the file extension for all archive files, except those with a file type of **README**. The **pax.Z** extension indicates a file that has been processed by the UNIX System Services **pax** command with the compress option.

File Attribute File

File attribute files contain file definition control tags that describe the attributes of the original data set. These attributes are used by the GIMUNZIP service routine to reload the data from the archived data set. The file definition control tags follow XML syntax rules and their format is as follows:

File Definition Control Tags

FILELIST:

```
├─<FILELIST>─┤ FILEATTR ├─</FILELIST>──────────────────────────────────────────┤
```

FILEATTR:

```
├─<FILEATTR─name="file name"─┬──────────────────────────────┬─┬──────────────────────────────┬──►
                             └─description="file description"─┘ └─type="─┬─SMPHOLD──────"─┘
                                                                         ├─SMPPTFIN──┤
                                                                         └─SMPRELF───┘

►─┬──────────────────────────┬─┬──────────────────────────────┬─dsorg="─┬─PO─┬"─recfm="format"──────────►
  └─level="vv.rr.mm.pp"──────┘ └─dsntype="─┬─LIBRARY─┬"─┘         └─PS──┘
                                           └─PDS─────┘

►─lrecl="length"─┬──────────────────────┬─blksize="size"─┬──────────────────────┬─primary="nnnn"──────►
                 └─lreclu="length"──────┘                 └─blksizeu="size"──────┘

►─┬──────────────────────┬─┬──────────────────────┬─allocunits="─┬─BLOCK───────"──────────────────►
  └─secondary="nnnn"─────┘ └─dirblocks="nnnn"─────┘              ├─CYLINDER──┤
                                                                 ├─RECORD────┤
                                                                 └─TRACK─────┘

►─┬──────────────────────────────────┬─┬──────────────────────────┬──────────────────────────────►
  └─length="─┬─block length──────"─┬─┘ └─avgrec="─┬─U─┬"─┘
             └─record length───────┘               ├─K─┤
                                                   └─M─┘

►─>─</FILEATTR>──────────────────────────────────────────────────────────────────────────────────┤
```

<FILELIST> Tag Syntax: The **<FILELIST>** and corresponding **</FILELIST>** tags identify the beginning and end of a group of file definitions.

<FILEATTR> Tag Syntax: The **<FILEATTR>** and corresponding **</FILEATTR>** tags identify the beginning and end of a file attribute definition for an archive file. The following attributes may be found on the **<FILEATTR>** tag:

name="*file name*"
: specifies the data set name of the original data set contained in this archive file.

description="*file description*"
: specifies a text description for the file. The value GIMZIP produces is copied from the description value, if specified, on the corresponding input **<FILEDEF>** tag.

type="*file type*"
: specifies a file type indicator that describes the contents of the original data set. The value is copied from the file type value, if specified, on the corresponding **<FILEDEF>** tag, and may be any of the following values:

  SMPHOLD indicates the data set contains SMP/E HOLDDATA statements.

SMPPTFIN indicates the data set contains SMP/E modification control statements (MCS).

SMPRELF indicates the data set contains an SMP/E RELFILE data set associated with a SYSMOD contained in the SMPPTFIN file.

level="*vv.rr.mm.pp*"
indicates the service level of the GIMZIP service routine used to create this file attribute file. The individual values are as follows:
vv version
rr release
mm modification level
pp PTF level

dsntype="*data set type*"
specifies the type of partitioned data set for the original data set.
LIBRARY indicates a PDSE
PDS indicates a PDS

dsorg="*organization*"
specifies the data set organization of the original data set.
PO indicates a partitioned organization
PS indicates a sequential organization

recfm="*format*"
specifies the record format of the original data set. The value can be from 1 to 3 alphabetic characters.

lrecl="*length*"
specifies the logical record length of the original data set. The value can be from 1 to 5 decimal digits.

lreclu="*length*"
specifies the logical record length of the IEBCOPY unloaded format of the original data set. The value can be from 1 to 5 decimal digits.

blocksize="*size*"
specifies the block size of the original data set. The value can be from 1 to 5 decimal digits in the range of 00000 through 32760.

blocksizeu="*size*"
specifies the block size of the IEBCOPY unloaded format of the original data set. The value can be from 1 to 5 decimal digits in the range of 00000 through 32760.

primary="*nnnnn*"
specifies the primary space for reloading the data from the original data set. The value must be non-zero and can be from 1 to 5 decimal digits.

secondary="*nnnnn*"
specifies the secondary space for reloading the data from the original data set. The value must be non-zero and can be from 1 to 5 decimal digits.

dirblocks="*nnnnn*"
specifies the number of directory blocks in the original data set. The value must be non-zero and can be from 1 to 5 decimal digits.

allocunits="*units*"
specifies the units of primary and secondary space and may be one of the following values:

BLOCK
indicates space is to be allocated in blocks. The size of the blocks is specified on the **length** attribute.

CYLINDER
indicates space is to be allocated in cylinders.

RECORD
indicates space is to be allocated in records. The average length of these records is specified on the **length** attribute.

TRACK
indicates space is to allocated in tracks.

length=″*nnnnn*″
specifies either the block length, or the average record length, used to allocate the primary and secondary space for reloading the data from the archive. If **allocunits=**″**BLOCK**″ is specified, then this value represents the block length. If **allocunits=**″**RECORD**″ is specified, then this value represents the average record length.

avgrec=″*multiplier*″
indicates the multiplier for the primary and secondary space allocation values, when the allocation units is records.

U indicates the primary and secondary space quantities represent the number of records in units (multiplier of 1).

K indicates the primary and secondary space quantities represent the number of records in thousands (multiplier of 1024 or 1K).

M indicates the primary and secondary space quantities represent the number of records in millions (multiplier of 1048576 or 1M).

Syntax Notes:

1. Data in columns 73 through 80 is ignored. If data is specified beyond column 72, it is ignored and an error in a following tag may be indicated.
2. File definition control tags may contain comments. Comments start with **<!--** (hex 4C5A6060) and end with **-->** (hex 60606E). The first **-->** encountered after the initial **<!--** will end the comment. A comment may precede or follow a tag, but may not appear within a tag.

File Attribute File Example: The following is an example of a file attribute file for a sequential data set containing modification control statements.

```
<?xml version="1.0" ?>
<FILELIST>

  <FILEATTR name="SAMPLE.FMID001.SMPMCS"
            description="This is the SMPMCS file for FMID001."
            level="02.07.00.35"
            type="SMPPTFIN"
            dsorg="PS"
            recfm="FB"
            lrecl="80"
            blksize="6160"
            allocunits="TRACK"
            primary="15">
  </FILEATTR>

</FILELIST>
```

Figure 95. File Attribute File (GIMFAF.XML) Example

Note: Blank lines and spaces have been added to the file attribute file for clarity, but are not necessarily produced by the GIMZIP service routine, nor are they required.

Return Codes

GIMZIP may end with the following return codes:

Return Code	Meaning
00	The input data was processed successfully.
04	A call to a system service may not have completed successfully.
12	One of the following: • Required file attributes could not be obtained. • Input data sets were not sequential or partitioned. • Call to a required system service failed. • Syntax errors in the SYSIN data set. • Data sets could not be opened. • SMPDIR data set was not allocated to an HFS directory. • SMPDIR directory was not empty. • Data sets were missing. • Required modules could not be loaded.
16	One of the following: • An I/O error occurred. • A syntax error was found on the EXEC statement parameters.
20	SMPOUT data set is missing.
> 20	Internal error. Report the error to the IBM Support Center.

Chapter 12. GIMIAP: Copy Utility Invocation Program

The SMP/E GENERATE command creates a job stream that builds a set of target libraries from a set of distribution libraries. For data elements or hierarchical file system elements, the GENERATE command builds a job (DEIINST for data elements or HFSINST for hierarchical file system elements) to invoke the appropriate copy utility for those elements. Each job step in the job installs multiple elements from multiple distribution libraries into a single target library. This is done by invoking the SMP/E program GIMIAP, which calls the appropriate copy utility to do the actual installation.

Although GIMIAP is to be used only by SMP/E, you may need to understand the control statements passed to the program. For example, you may need to diagnose errors detected by GIMIAP (such as syntax errors or missing information). To help you with this task, this chapter describes:

- The control statements used to invoke GIMIAP
- The return codes issued by GIMIAP
- The JCL statements used in the job that invokes GIMIAP

Control Statements Used to Invoke GIMIAP

The GIMIAP program runs as a background job and is driven by control statements that identify the following:

- The copy utility to be invoked
- The distribution and target libraries to be used for each invocation of GIMIAP
- The elements to be installed
- The parameters to be passed to the copy utility

These control statements are created by SMP/E during GENERATE processing and are for use during GIMIAP processing. Each invocation of GIMIAP can install many elements through multiple invocations of the copy utility. Each invocation of the copy utility by GIMIAP installs a single element. These are the control statements used for input to a GIMIAP step:

- INVOKE
- COPY
- SELECT

The INVOKE Control Statement

The INVOKE control statement identifies the copy utility that GIMIAP should invoke.

The INVOKE control statement is always produced. There is one INVOKE control statement for each job step (that is, one INVOKE control statement for each invocation of GIMIAP). The INVOKE control statement must be the first control statement and must be a single-card image (one 80-byte record).

INVOKE Control Statement

```
►►─INVOKE──┬─COPY(name)─LIST(─┬─YES─┬─)──┬──────────┬──┬──────────────┬──RC(rc)─PRINT(ddname)─•──────────────►◄
           │                  └─NO──┘    └─REPLACE──┘  │              │
           └─HFSCOPY(name)──────────────────────────────┘              │
```

© Copyright IBM Corp. 1986, 2002

The following operands are required on the INVOKE statement:

COPY
Specifies the name of the copy utility to be used when copying data elements that do not need reformatting and are being installed into a partitioned data set. The value of COPY is either the value of the NAME operand in the UTILITY entry in effect at GENERATE time or the default of IEBCOPY.

HFSCOPY
Specifies the name of the copy utility to be used when copying hierarchical file system elements. The value of HFSCOPY is either the value of the NAME operand in the UTILITY entry in effect at GENERATE time or the default of BPXCOPY.

LIST
Applies only when copying data elements. It specifies whether member names should be listed during copy processing. This value is derived from the copy utility entry in effect when the GENERATE command was issued.

YES Indicates that member names should be listed during copy processing. This is the default.

NO Indicates that the list of member names should be suppressed during copy processing.

PRINT
Specifies the ddname that is to be used for print output generated by the specified copy utility. The value of PRINT is either the value of the PRINT operand in the UTILITY entry in effect at GENERATE time or the default of SYSPRINT.

Note: If SYSTSPRT is specified as the PRINT value for the copy utility, it is ignored and the default of SYSPRINT is used instead.

RC
Specifies the highest acceptable return code from the specified copy utility. The value of RC is either the value of the RC operand in the UTILITY entry in effect at GENERATE time or the default of 0.

REPLACE
Applies only when copying data elements. It specifies whether existing members are to be replaced when copying an element. If REPLACE is specified on the GENERATE command, then it is specified on the INVOKE control statement for data elements.

COPY Control Statement

A COPY control statement identifies the input and output libraries to be used for the SELECT control statements that follow it. Each COPY statement identifies a distribution library that has elements to be copied to a single target library. Multiple COPY statements can identify the same target library.

A COPY control statement must follow an INVOKE or SELECT control statement. Also, each COPY control statement must be followed by at least one SELECT control statement.

COPY Control Statement

```
►►──COPY──FROMLIB(ddname)──TOLIB(ddname)──•──────────────────────────────►◄
```

The following operands are required on the COPY statement:

FROMLIB
is the ddname used by the copy utility as its input file for the source of the element (that is, the distribution library). The name can be 1 to 8 characters and must be composed of uppercase alphabetic, numeric, or national ($, #, @) characters.

TOLIB
is the ddname used by the copy utility as its output file identifying where the element is to be installed (that is, the target library). The name can be 1 to 8 characters and must be composed of uppercase alphabetic, numeric, or national ($, #, @) characters.

The SELECT Control Statement

The SELECT control statement identifies the element to be installed and the operands to be passed to the copy utility or SMP/E to enable its installation. The SELECT control statement must follow a COPY control statement and may span multiple 80-byte records.

SELECT Control Statement

```
►►──SELECT──type(name)──┬──────────────────────────────┬──────────────────►
                        │   ┌──,──┐                    │
                        ├──ALIAS(──▼──alias──────)────┤
                        │   ┌──,──┐                    │
                        └──EPARM(──▼──option─────)────┘

►──┬──────────────────────────────────────────────────┬──•──────────────►◄
   └──SHSCRIPT──(──'/directory/file'──┬──────────┬──┬──────────┬──)──┘
                                      └──,PRE────┘  └──,POST───┘
```

type
is the type of the element to be processed. Any valid data element type or hierarchical file system element type, including those with national language identifiers, may be specified. An element type name is formed by stripping the ++ from the beginning of the name of the MCS for that element. For example, the element type for an element defined by a ++CLIST MCS is **CLIST**, while the element type for a ++HFSRMS MCS is **HFSRMS**. See “Data Element MCS” on page 10 for a list of data element MCS and “Hierarchical File System Element MCS” on page 26 for a list of hierarchical file system element MCS.

name
is the name of element to be processed.

ALIAS
specifies the list of alias names for the data element. This operand applies only to data elements.

EPARM
is the parameter list to be passed for this invocation of the HFSCOPY utility. This operand applies only to hierarchical file system elements. The parameter list consists of an LL value and the actual execution parameters.

- LL represents a halfword hexadecimal length of the character string (the HFSCOPY utility execution parameters) immediately following it as part of the EPARM value. The length of the character string described does not include the opening parenthesis preceding the LL value nor the closing parenthesis following the last option specified.

  No blanks are allowed between the opening parenthesis and the LL value. The opening parenthesis and the LL value must be in the same record.

  Because the LL value is nondisplayable (ready-to-use) hexadecimal, it may appear as blanks or odd characters. This is valid data and should not be removed or modified.
- The *option* values are the execution parameters to be used by the HFSCOPY utility for this invocation of the utility. SMP/E always supplies execution parameters to the HFSCOPY utility, and the parameters are separated by commas with no intervening blanks.

  If the HFSCOPY UTILITY entry that is in effect supplies execution parameters, these values precede the SMP/E-generated information. For example, suppose the UTILITY entry has the following values:
  NAME MYHFSCPY
  PRINT MYPRINT
  PARM A-PARM-FOR-MYHFSCPY

  The character string for the execution parameters would be generated as:
  ```
  LLA-PARM-FOR-MYHFSCPY,ELEMENT(hfselm1),TYPE(TEXT),LINK('linknm01'))
  ```

  If a PARM value of *user_info* is specified in an element's MCS, the character string for the execution parameters would be generated as:
  ```
  LLA-PARM-FOR-MYHFSCPY,user_info,ELEMENT(hfselm1),TYPE(TEXT),LINK('linknm01'))
  ```

  These are the parameters that are generated by SMP/E, using information in the hierarchical file system element entry:

  ELEMENT(element_name)
  the name of the element to be installed in the hierarchical file system. The *element_name* is an unquoted character string 1 to 8 bytes long. It is composed of uppercase alphabetic, numeric, or national ($, #, @) characters.

  LINK('linkname1','linkname2','linkname3'...)
  the alternate names by which this element can be known in the target library within the hierarchical file system. A *linkname* can be up to 1023 characters long and can contain special characters other than just uppercase alphabetic, numeric, or national ($, #, and @) characters.

  SMP/E always puts apostrophes around each *linkname* and separates multiple values with commas with no intervening blanks.

  SYMLINK('linkname1','linkname2','linkname3'...)
  a list of symbolic links, which are file names that can be used as alternate names for referring to this element in the hierarchical file

system. Each linkname listed here is associated with a pathname listed in the SYMPATH operand. A symbolic link can be up to 1023 characters long and can contain characters in the range X'40' through X'FE'.

SMP/E always puts apostrophes around each symbolic link and separates multiple values with commas with no intervening blanks.

SYMPATH('pathname1','pathname2','pathname3'...)
a list of pathnames that are associated with symbolic links identified by the SYMLINK operand. A symbolic pathname can be up to 1023 characters long and can contain characters in the range X'40' through X'FE'.

SMP/E always puts apostrophes around each symbolic pathname and separates multiple values with commas with no intervening blanks.

SYMPATH appears if SYMLINK appears, otherwise it is omitted.

For information on how the pathnames and linknames are associated, see the description of the SYMPATH operand and "Example 3: Packaging a SYSMOD with a Symbolic Link" on page 35 in "Hierarchical File System Element MCS" on page 26.

TYPE(TEXT|BINARY)
the installation format for the element in the hierarchical file system. SMP/E generates this parameter from information stored in the element entry in the target zone. If no setting exists for TEXT mode or BINARY mode, SMP/E does not pass this parameter to the HFS copy utility.

SHSCRIPT
indicates that a UNIX shell script is to be invoked to complete the installation of the selected element. This operand applies only to hierarchical file system elements whose ELEMENT entry contains a SHSCRIPT subentry.

/directory/file
is the full path specification for the shell script to be invoked. The */directory/file* is derived from the SHELLSCR entry that matches the name in the hierarchical file system element's SHSCRIPT subentry. The SYSLIB subentry of the shell script identifies the ddname of the directory and the shell script name itself is the file.

PRE
indicates the shell script is to be invoked before the selected element is copied to the directory in the hierarchical file system. This value is obtained from the SHSCRIPT subentry of the selected element.

POST
indicates the shell script is to be invoked after the selected element is copied to the directory in the hierarchical file system. This value is obtained from the SHSCRIPT subentry of the selected element.

Return Codes

To help you diagnose errors, GIMIAP issues messages and return codes. The messages are documented in the *SMP/E Messages, Codes, and Diagnosis* manual. Here is a description of the return codes:

Return Code	Meaning
00	GIMIAP processing was successful. The message issued by GIMIAP states that the invocation of GIMIAP was successful.

Return Code	Meaning
04	GIMIAP processing was successful. The message issued by GIMIAP states that the invocation of GIMIAP was successful, but one or more of the following has occurred: • An ALIAS was not installed during element installation. • The COPY or HFSCOPY utility issued a non-zero return code that is less than or equal to the acceptable return code as defined in the RC operand of the INVOKE statement.
08	SMP/E processing errors occurred or a return code from the copy utility was higher than the acceptable return code specified on the INVOKE control statement. At least one element was not installed correctly, although an attempt was made to install all elements to the target library. Review the copy utility print output and SMPOUT output to determine the error. Correct the problem and rerun the job step.
12	GIMIAP encountered an invalid control statement. As a result, the elements in that job step were not installed. Once a control statement error is encountered, no more elements are processed for that job step. The statement must be corrected and the job step must be rerun. However, subsequent job steps will be processed. The message issued by GIMIAP indicates how many 80-byte records had been processed when the syntax error was encountered.
16	A severe error was encountered. As a result, the elements in that job step were not installed. After correcting the problem, the job step must be rerun. However, subsequent job steps will be processed. The message issued by GIMIAP indicates the cause of the problem, such as an I/O error on SYSIN, an open failure on SYSIN or another ddname, a syntax error on the EXEC parm, a syntax error on the control cards, or the absence of the copy utility.
20	A terminating error was encountered. The SMPOUT data set is not allocated or cannot be opened. GIMIAP is terminated.

JCL Statements Used in the DEIINST or HFSINST Job

JCL statements are created for the DEIINST or HFSINST job during the GENERATE process. Along with the GIMIAP control statements for each job step, the JCL is composed of:

- A **JOB** statement. The JOB statement describes current installation-dependent parameters. The jobname is “DEIINST” when GIMIAP is to install data elements or “HFSINST” for hierarchical file system elements.
- One or more **EXEC** statements. The **EXEC statement** specifies **PGM=GIMIAP,PARM=’***option*’.

  The step name is the name of the target library.

  The following is an example of the EXEC statement to call GIMIAP:

```
//jobname  JOB ...
//stepname EXEC PGM=GIMIAP,PARM='option'
```

Figure 96. JCL to call GIMIAP

EXEC
is the statement used to call GIMIAP. The EXEC statement must specify **PGM=GIMIAP**. The following option may be specified on the EXEC statement PARM operand:

LANGUAGE=*xxx*
where *xxx* can be one of the following:
ENU US English

JPN Japanese

The LANGUAGE option defines which language to use for GIMIAP messages. **LANGUAGE** can also be specified as **L**. The LANGUAGE value will be the same as was used on GIMSMP while the GENERATE command was executed. If **LANGUAGE** is not specified, the default is **LANGUAGE=ENU**.

- **DD statements.** The DD statements define the data sets to be used by GIMIAP processing. The following ddnames are required:

  dlib the file identified by a FROMLIB operand on a COPY control statement.

  syslib the file identified by a TOLIB operand on a COPY control statement.

  print This ddname is used by the copy utility for messages and processing information. If no DDDEF is found for the print file during GENERATE processing, the default of **SYSOUT=*** is generated. The ddname is the same as is specified for the PRINT operand of the INVOKE statement being used for the current invocation of GIMIAP.

  SYSIN defines the input control stream for GIMIAP.

  SMPOUT the file to be used by the GIMIAP for message writing.

  SYSPRINT Contains output when GIMIAP is processing data elements or hierarchical file system elements with shell scripts.

  The following DD statements are required when processing data elements:

  SYSUT1 the file identified for containing the input statements to the copy program.

  SYSUT3 A work file to be used by the copy program.

  SYSUT4 A work file to be used by the copy program.

Figure 97 on page 452 illustrates the JCL statements that could be generated to invoke GIMIAP processing for data elements and Figure 98 on page 453 illustrates the JCL statements that could be generated to invoke GIMIAP processing for hierarchical file system elements.

```
----+----1----+----2----+----3----+----4----+----5----+----6----+----7----+----8
1
//DEIINST  JOB 'accounting info',MSGLEVEL=(1,1)
2
//tgtlib01  EXEC PGM=GIMIAP,PARM='LANGUAGE=ENU'                        EXECDEI
//distlib1 DD distribution library DD info.                             distlib1
//distlib2 DD distribution library DD info.                             distlib2
//tgtlib01 DD target library 1 DD info                                  tgtlib01
//* ------ work data sets ----------------
//SYSUT1   DD UNIT=SYSDA,SPACE=(TRK,(x,y)),DISP=(NEW,DELETE)            SYSUT1
//SYSUT3   DD UNIT=SYSDA,SPACE=(TRK,(x,y)),DISP=(NEW,DELETE)            SYSUT3
//SYSUT4   DD UNIT=SYSDA,SPACE=(TRK,(x,y)),DISP=(NEW,DELETE)            SYSUT4
//SYSPRINT DD SYSOUT=*                                                  DEFAULT
//SMPOUT   DD SYSOUT=*                                                  SMPOUT
//SYSIN    DD *                                                         DEFAULT
INVOKE COPY(IEBCOPY) RC(0) PRINT(SYSPRINT) REPLACE.
COPY FROMLIB(distlib1) TOLIB(tgtlib01).
SELECT CLIST(elem1).
SELECT CLIST(elem2) ALIAS(elemA,elemB).
COPY FROMLIB(distlib2) TOLIB(tgtlib01).
SELECT CLIST(elem3) ALIAS(elemC).
SELECT CLIST(elem4).
/*
2
//tgtlib02  EXEC PGM=GIMIAP,PARM='LANGUAGE=ENU'                        EXECDEI
//distlib3 DD distribution library DD info.                             distlib3
//distlib4 DD distribution library DD info.                             distlib4
//tgtlib02 DD target library 2 DD info.                                 tgtlib02
//* ------ work data sets ----------------
//SYSUT1   DD UNIT=SYSDA,SPACE=(TRK,(x,y)),DISP=(NEW,DELETE)            SYSUT1
//SYSUT3   DD UNIT=SYSDA,SPACE=(TRK,(x,y)),DISP=(NEW,DELETE)            SYSUT3
//SYSUT4   DD UNIT=SYSDA,SPACE=(TRK,(x,y)),DISP=(NEW,DELETE)            SYSUT4
//SYSPRINT DD SYSOUT=*                                                  DEFAULT
//SMPOUT   DD SYSOUT=*                                                  SMPOUT
//SYSIN    DD *                                                         DEFAULT
INVOKE COPY(IEBCOPY) RC(0) PRINT(SYSPRINT) REPLACE.
COPY FROMLIB(distlib3) TOLIB(tgtlib02).
SELECT HELPENU(elem3).
SELECT HELPENU(elem4) ALIAS(elemD,elemE).
COPY FROMLIB(distlib4) TOLIB(tgtlib02).
SELECT HELPENU(elem5) ALIAS(elemF).
SELECT PNLENU(elem6).
/*
```

Notes:

1. The **job name** “DEIINST” is generated during the job creation process. A single job installs the data elements.
2. The **job step** name is the target library. Each job step installs multiple data elements from multiple distribution libraries into a single target library.

Figure 97. Sample DEIINST Job for GIMIAP

```
----+----1----+----2----+----3----+----4----+----5----+----6----+----7----+----8
1
//HFSINST  JOB 'accounting info',MSGLEVEL=(1,1)
2
//tghfs01  EXEC PGM=GIMIAP                                            EXECIAP
//distlib1 DD distribution library DD info.                            distlib1
//distlib2 DD distribution library DD info.                            distlib2
//tghfs01  DD PATH='/Hierarchical/File/System/library1/DD/info/'       tghfs01
//SYSPRINT DD SYSOUT=*                                                 DEFAULT
//SYSIN    DD *                                                        DEFAULT
INVOKE HFSCOPY(BPXCOPY) RC(0) PRINT(SYSPRINT)
COPY FROMLIB(distlib1) TOLIB(tgthfs01)
SELECT HFS(hfselm1) EPARM(LLELEMENT(hfselm1),LINK('linkname01','linkname
thatislongerthanthefirstoneandshouldbemoreuserfriendly'),TYPE(BINARY))
SELECT HFS(hfselm2) EPARM(LLELEMENT(hfselm2),LINK('linknm01'),TYPE(TEXT)
)
COPY FROMLIB(distlib2) TOLIB(tgthfs01)
SELECT HFS(hfselm3) EPARM(LLELEMENT(hfselm3),TYPE(TEXT))
SELECT HFS(hfselm4) EPARM(LLELEMENT(hfselm4),LINK('linknm01','linknm02',
'linknm03','linknm04','linknm05'))
/*
2
//tghfs02  EXEC PGM=GIMIAP                                            EXECIAP
//distlib3 DD distribution library DD info.                            distlib3
//distlib4 DD distribution library DD info.                            distlib4
//tghfs02  DD PATH='/Hierarchical/File/System/library2/DD/info/'       tghfs02
//SYSPRINT DD SYSOUT=*                                                 DEFAULT
//SYSIN    DD *                                                        DEFAULT
INVOKE HFSCOPY(BPXCOPY) RC(0) PRINT(SYSPRINT)
COPY FROMLIB(distlib3) TOLIB(tgthfs02)
SELECT HFS(hfselm3) EPARM(LLELEMENT(hfselm3),LINK('linknm01','linknm02',
'linknm03','linknm04'),TYPE(TEXT))
SELECT HFS(hfselm4) EPARM(LLELEMENT(hfselm4),LINK('linknm01'),TYPE(TEXT)
)
COPY FROMLIB(distlib4) TOLIB(tgthfs02)
SELECT HFS(hfselm5) EPARM(LLELEMENT(hfselm5),TYPE(TEXT))
SELECT HFS(hfselm6) EPARM(LLELEMENT(hfselm6),LINK('linknm01','linknm02',
'linknm03','linknm04','linknm05'),TYPE(TEXT))
/*
```

Notes:

1. The **job name** “HFSINST” is generated during the job creation process. A single job installs all hierarchical file system elements.
2. The **job step name** on the EXEC statement is the target library within the hierarchical file system. Each job step installs multiple hierarchical file system elements from multiple distribution libraries into a single target library within the hierarchical file system.

Figure 98. Sample HFSINST Job for Invoking GIMIAP

Chapter 13. GIMUTTBL: Specifying Which Utilities SMP/E Can Call

> **Note**
> The information in this appendix is **not** intended to be used as a Programming Interface of IBM SMP/E for z/OS and OS/390, V3R1.

When you install SYSMODs, SMP/E calls system utility programs to make the changes or to recover from failures. For security, you may want to restrict the programs SMP/E can call. To do this, you can change module GIMUTTBL, which lists all the utility programs SMP/E should consider valid.

Summary of GIMUTTBL Processing

When SMP/E is installed, GIMUTTBL is copied from SYS1.AOS12 to SYS1.LINKLIB and SYS1.MIGLIB. SMP/E uses the resulting load module in SYS1.LINKLIB to choose the programs it can call. When SMP/E processes a call for a particular utility program, it follows these steps to determine whether the program can be called:

1. Before SMP/E calls the utility program, it loads module GIMUTTBL.
2. SMP/E checks the list of valid program names in GIMUTTBL.
   - If the list is empty, SMP/E assumes that any utility program is valid. So, if you do not change GIMUTTBL, SMP/E does not check for valid programs.
   - If the list has entries, SMP/E checks the list for the name of the program to be loaded.
     - If SMP/E finds the name, processing continues.
     - If SMP/E does not find the name, command processing fails.
3. If SMP/E does not find GIMUTTBL, command processing fails. This happens if you delete GIMUTTBL from SYS1.LINKLIB after installing SMP/E.

Using GIMUTTBL

If you want to use module GIMUTTBL to restrict which utility programs SMP/E can call, follow these steps:

1. Code macro GIMDFUT with the parameters needed to make the desired changes. This macro comes with SMP/E.
2. Assemble macro GIMDFUT. This creates a USERMOD that lists the valid program names and replaces GIMUTTBL.
3. Use RECEIVE, APPLY, and ACCEPT to install the USERMOD for GIMUTTBL.

These are the parameters you can specify on macro GIMDFUT:

© Copyright IBM Corp. 1986, 2002

Macro GIMDFUT

```
►►─GIMDFUT─USERMOD=sysmod_id──┬──────────────────────┬──┬─,DEFAULT=NO──┬──────────────►
                              │   ┌──────────────┐   │  └─,DEFAULT=YES─┘
                              └─,PGM=(──name──)──┘
►──┬──────────────────────┬──┬──────────────────────┬──┬──────────────────────┬──►◄
   │   ┌──────────────┐   │  │   ┌──────────────┐   │  │   ┌──────────────┐   │
   └─,PRE=(──sysmod_id──)─┘  └─,REQ=(──sysmod_id──)─┘  └─,SUP=(──sysmod_id──)─┘
```

USERMOD
defines the SYSMOD ID of the USERMOD SMP/E creates.

PGM
is the list of program names SMP/E can invoke. Specify any number of names enclosed in parentheses and separated by a comma. Each value must contain from 1 to 8 alphanumeric characters.

If you specify YES for the DEFAULT operand, you can omit the PGM operand. Otherwise, you must define it.

DEFAULT
indicates whether the names of standard utility programs should be included in GIMUTTBL. These names are added to any names defined with the PGM operand. The default value is NO.

If you specify YES for DEFAULT, the following standard utility programs are included in GIMUTTBL:

BPXCOPY	Hierarchical file system copy utility
ASMA90	Assembler utility
IDCAMS	Access method services utility
IEBCOPY	Compress utility, copy utility, retry utility
IEBUPDTE	Update utility
IEWBLINK	Binder link-edit utility
IEWL	Link-edit utility
IMASPZAP	Superzap utility

PRE
lists the prerequisite SYSMODs that should be specified on the ++VER statement of the USERMOD. Specify any number of SYSMOD IDs; enclose them in parentheses, and use a comma as a separator after every one except the last. Each SYSMOD ID must contain 7 alphanumeric characters.

REQ
lists the requisite SYSMODs that should be specified on the ++VER statement of the USERMOD. Specify any number of SYSMOD IDs; enclose them in parentheses, and use a comma as a separator after every one except the last. Each SYSMOD ID must contain 7 alphanumeric characters.

SUP
lists any superseded SYSMODs that should be specified on the ++VER statement of the USERMOD. Specify any number of SYSMOD IDs; enclose them in parentheses, and use a comma as a separator after every one except the last. Each SYSMOD ID must contain 7 alphanumeric characters.

Figure 99 is an example of macro GIMDFUT and the resulting USERMOD.

```
----+----1--....---10----+----11----+--
                   GIMDFUT  USERMOD=USER003,                        x
                         PGM=(MYCOPY,IFOX00,                       x
                         MYRETRY,USERZAP),                         x
                         DEFAULT=YES,                              x
                         SUP=(USER001,USER002)
                         END.

This would generate the following user modification:

++USERMOD(USER003).
++VER(Z038) FMID(HMP1D00)
     SUP(
        USER001
        USER002
               ).
++MOD(GIMUTTBL) DISTLIB(AOS12).
...
... object code for GIMUTTBL
...
```

Figure 99. Sample USERMOD Created by GIMDFUT

After this sample USERMOD is installed, module GIMUTTBL contains entries for the following utility programs:

- From the user modification:
  - MYCOPY
  - IFOX00
  - MYRETRY
  - USERZAP
- From the GIMDFUT defaults:
  - BPXCOPY
  - ASMA90
  - IDCAMS
  - IEBCOPY
  - IEBUPDTE
  - IEWBLINK
  - IEWL
  - IMASPZAP

Appendix A. SMP/E Naming Conventions

This appendix describes the naming conventions used by SMP/E. Table 56 summarizes the naming conventions you need to follow when using SMP/E. After this table are details on the naming conventions IBM follows for:

- HOLD reason IDs and classes
- Source IDs
- SYSMODs

Table 56. Summary of SMP/E Naming Conventions

Entry or Value	Number of Characters	Other Requirements
DDDEF entry	1–8 alphabetic (A–Z), national (@, #, or $), or numeric (0–9) characters	• The first character must be alphabetic or national • Must match ddname of data set
DLIB zone or DLIBZONE entry	1–7 alphanumeric (A–Z, 0–9) or national ($, #, @) characters	The first character must be alphabetic.
Element entry	1–8 alphanumeric (A–Z, 0–9) characters	Naming convention for first character: **A–I** Used by IBM **J–Z** Available for users
FMID *see* SYSMOD ID		
FMIDSET entry	1–8 alphanumeric (A–Z, 0–9) characters	
Global zone or GLOBALZONE entry		Must be **GLOBAL**
Hold class	1–7 alphanumeric (A–Z, 0–9) characters	Naming convention for first character: **A** Reserved for IBM use **V** Reserved for user-assigned values For a description of the hold classes used by IBM, see “Class Values” on page 462.
Hold reason ID: error	1–7 alphanumeric (A–Z, 0–9) characters	Number of the APAR used to report an error in a PTF For details on the conventions IBM follows, see “Error Reason IDs” on page 460.
Hold reason ID: system	1–7 alphanumeric (A–Z, 0–9) characters	Naming convention for first character: **A–U** Reserved for IBM use **V–Z** Reserved for user-assigned values For a description of the system reason IDs used by IBM, see “System Reason IDs” on page 460.
Hold reason ID: user	1–7 alphanumeric (A–Z, 0–9) characters	To avoid conflicts with IBM reason IDs, follow the conventions for system reason IDs. For details on the conventions IBM follows, see “User Reason IDs” on page 462.
OPTIONS entry	1–8 alphanumeric (A–Z, 0–9) characters	

© Copyright IBM Corp. 1986, 2002

Table 56. Summary of SMP/E Naming Conventions (continued)

Entry or Value	Number of Characters	Other Requirements
Source ID	1–8 alphanumeric (A–Z, 0–9) characters	Naming convention for first character: **A–O** Reserved for user-assigned values **P–Z** Reserved for IBM use For a description of the source IDs used by IBM, see "Naming Conventions for Source IDs" on page 462.
SYSMOD ID	7 alphanumeric (A–Z, 0–9) characters	Must start with a letter. Naming convention for first character: **A–K** Used by IBM for functions **L–T** Available for users **U** Used by IBM for PTFs **V–Z** Used by IBM for APARs For details on the conventions IBM follows, see "Naming Conventions for SYSMODs" on page 463.
Target zone or TARGETZONE entry	1–7 alphanumeric (A–Z, 0–9) or national ($, #, @) characters	The first character must be alphabetic.
UTILITY entry	1–8 alphanumeric (A–Z, 0–9) characters	Must match the associated name specified in the appropriate OPTIONS entry Should match the name of the associated utility program
ZONESET entry	1–8 alphanumeric (A–Z, 0–9) characters	Avoid using the same name as any of the target or DLIB zones defined in the global zone containing the ZONESET entry

Naming Conventions for HOLD Reason IDs and HOLD Classes

The ++HOLD statement prevents SMP/E from installing a SYSMOD until some special action is taken. The type of action is indicated by the reason ID or class specified on the ++HOLD statement. A reason ID or class value can contain from 1 to 7 alphanumeric characters. To prevent conflicts between IBM- and user-specified values, there are naming conventions for the three types of HOLD reason IDs (error, system, and user), as well as for HOLD classes.

Error Reason IDs

The reason ID for an error HOLD is the number of the APAR used to report an error in a PTF. Therefore, error reason IDs follow the naming conventions for APARs. These are described under "PTF, APAR, and USERMOD SYSMOD IDs" on page 464.

System Reason IDs

The reason ID for a system HOLD is generally a brief indication of the kind of processing the SYSMOD requires. These are the values currently used by IBM:

ID	Explanation
ACTION	The SYSMOD needs special handling before or during APPLY processing, ACCEPT processing, or both.
AO	The SYSMOD may require action to change automated operations procedures and associated data sets and user exits in products or

in customer applications. The PTF cover letter describes any changes (such as to operator message text, operator command syntax, or expected actions for operator messages and commands) that can affect automation routines.

DB2BIND A DB2 application REBIND is required for the SYSMOD to become effective.

DELETE The SYSMOD contains a ++DELETE MCS, which deletes a load module from the system.

DEP The SYSMOD has a software dependency.

DOC The SYSMOD has a documentation change that should be read before the SYSMOD is installed.

EC The SYSMOD needs a related engineering change.

ENH The SYSMOD contains an enhancement, new option or function. The HOLD statement provides information to the user regarding the implementation and use of the enhancement.

EXIT The SYSMOD contains changes that may affect a user exit. For example, the interface for an exit may be changed, an exit may need to be reassembled, or a sample exit may be changed.

EXRF The SYSMOD must be installed in both the active and the alternative Extended Recovery Facility (XRF) systems at the same time to maintain system compatibility. (If you are not running XRF, you should bypass this reason ID.)

FULLGEN The SYSMOD needs a complete system or subsystem generation to take effect.

IOGEN The SYSMOD needs a system or subsystem I/O generation to take effect.

IPL The SYSMOD requires an IPL to become effective. For example, the SYSMOD may contain changes to LPA or NUCLEUS, the changes may require a CLPA, or a failure to perform an IPL might lead to catastrophic results, such as could be caused by activation of a partial fix.

Note: If you plan to perform an IPL with CLPA after the SYSMOD has been applied, then no further investigation of the HOLD is required; simply bypass the IPL reason ID. However, if you are not planning to perform an IPL with CLPA, then the details of the HOLD statement must be investigated to determine what kind of actions are required to activate the SYSMOD.

MSGSKEL This SYSMOD contains message changes that must be compiled for translated versions of the message changes to become operational on extended TSO consoles.

If you want to use translated versions of the messages, you must run the message compiler once for the library containing the English message outlines, and once for each additional language you want to be available on your system. For details, see *z/OS MVS Planning: Operations*.

If you want to use **only** the English version of the messages, you do not need to run the message compiler. You should bypass this reason ID.

RESTART To become effective, the SYSMOD requires a special subsystem restart operation. The HOLD statement contains information regarding the required restart actions.

User Reason IDs

The reason ID for a user HOLD is whatever you think is appropriate to describe why the SYSMOD should be held. Because IBM does not use these reason IDs, there are no restrictions on the values you can use. However, to prevent possible confusion with other IBM reason IDs, follow the naming conventions for system reason IDs.

Class Values

A class value indicates an alternative way to release a held SYSMOD. These are the values currently used by IBM:

Class	Explanation
ERREL	The SYSMOD is held for an error reason ID but should be installed anyway. IBM has determined that the problem the SYSMOD resolves is significantly more critical than the error reflected by the holding APAR.
HIPER	The SYSMOD is held with a hold class of HIPER (High Impact)
PE	The SYSMOD is held with a hold class of “PTF in Error”.
UCLREL	UCLIN needed for the SYSMOD has been handled by IBM and no longer requires your attention.
YR2000	Identifies PTFs that provide Year 2000 function, or fix a Year 2000-related problem.

Naming Conventions for Source IDs

With the SOURCEID operand, you can associate a name (a source ID) with each SYSMOD processed by a single RECEIVE command, and then later process those SYSMODs as a group by using that source ID. The following values are currently used by IBM.

RSU*yymm* This is the indicator used to identify a Recommended Service Upgrade. For more information on RSU, see *SMP/E User’s Guide*.

PUT*yymm* Each PTF is assigned a source ID in the format PUT*yymm*.

- *yy* is the year the PTF was made available as preventive service.
- *mm* is the month the PTF was made available as preventive service.

The PUT*yymm* source ID represents a monthly accumulation of PTFs that have been COR-closed (made available for corrective service) within a given month and assigned a RETAIN VOLID indicating this. The RETAIN VOLID reflects the monthly PUT*yymm* level no later than the 15th of the following month. For example, PUT0106 represents PTFs that were COR-closed in June 2001 and assigned a RETAIN VOLID of 0106 between July 1 and July 15.

SMCCOR This indicates a PTF that is approved for distribution, but has not been assigned a monthly PUT*yymm* source ID at the time your order was created. SMCCOR PTFs are not necessary for installation; however, they are made available for corrective service. If you plan to install any of the PTFs with this source ID, refer to the CORPE PSP bucket or latest available PUT bucket for the most current HOLD information. These PTFs are provided in case you experience the problem they fix and need to install them as corrective service.

SMCREC This indicates a PTF that is approved for distribution and is recommended for installation, but has not been assigned a monthly PUT*yymm* source ID at the time your order was created. These PTFs should be installed on your system. They were assigned a source ID of SMCREC for one of the following reasons:

- The PTF is needed to install a product.
- The PTF is needed to support new hardware.
- The PTF resolves an error for another PTF (PE-PTF).

To further enhance your ability to selectively install PUT*yymm* and SMCREC PTFs, the additional SOURCEIDs listed below are assigned to the applicable PTFs. (There will be PUT*yymm* and SMCREC PTFs that **do not** fit into the categories below and, therefore, are not assigned multiple source IDs.)

HIPER Identifies PTFs resolving a high-impact APAR

SPE Identifies PTFs that are small programming enhancements

PRP Identifies PTFs that resolve PTFs in error

OS390R*n* This indicates a PTF that is at the integration tested level for OS/390 Release *n*.

YR2000 This identifies PTFs that provide Year 2000 function, or fix a Year 2000-related problem.

Naming Conventions for SYSMODs

The specific naming conventions for a SYSMOD ID depend on the type of SYSMOD: function, PTF, APAR, or USERMOD. The following sections define IBM's naming conventions for SYSMOD IDs. This information is provided to help you develop a naming scheme for your own SYSMODs and avoid conflicts with IBM-written SYSMODs. However, these conventions are **not** requirements for user-written SYSMODs, and SMP/E does not check whether a SYSMOD ID follows these conventions.

Function SYSMOD IDs

The IBM convention for the SYSMOD ID of a function SYSMOD is *tcccrrr*, where:

t is the type of function. These are the values used by IBM:

- **A** Licensed vendor or business partner base function
- **B** Licensed vendor or business partner dependent function
- **C, D** Reserved for future use
- **E** Unlicensed base function
- **F** Unlicensed dependent function
- **G** Reserved for future use

H Licensed base function
I Reserved for future use
J Licensed dependent function
K Reserved for future use

Names of user-written functions can start with any letters other than these.

ccc For functions provided by IBM, this is the product code. It must be three alphanumeric characters (no vowels).

rrr For functions provided by IBM, this is the release number. It identifies a specific function within a product. These three characters identify a specific release of a product function and must be alphanumeric.

Note: The former convention for the SYSMOD ID of a function was *tvvvrrr*.

PTF, APAR, and USERMOD SYSMOD IDs

The IBM convention for the SYSMOD ID of a service SYSMOD (APAR, APAR fix, PTF) or USERMOD is *tsnnnnn*, where:

t identifies the type of SYSMOD. It is a single alphanumeric character. These are the values used by IBM:

A–K Used by IBM for various levels of an APAR fix

L–T Available for users

U Used by IBM for PTFs

V–Z Used by IBM for various levels of an APAR fix

s is the system to which the SYSMOD and its associated product apply. These are the values used by IBM for PTFs and APAR fixes:

L, N, P Licensed products for MVS

R Unlicensed products for MVS

W, Y, Z MVS products only

Any valid character can be used for user SYSMODs.

nnnnn is an additional identifier for the SYSMOD. For PTFs and APAR fixes supplied by IBM, it is a number from 00001 to 99999.

Appendix B. Accessibility

Accessibility features help a user who has a physical disability, such as restricted mobility or limited vision, to use software products successfully. The major accessibility features in z/OS enable users to:

- Use assistive technologies such as screen-readers and screen magnifier software
- Operate specific or equivalent features using only the keyboard
- Customize display attributes such as color, contrast, and font size

Using assistive technologies

Assistive technology products, such as screen-readers, function with the user interfaces found in z/OS. Consult the assistive technology documentation for specific information when using it to access z/OS interfaces.

Keyboard navigation of the user interface

Users can access z/OS user interfaces using TSO/E or ISPF. Refer to *z/OS TSO/E Primer*, *z/OS TSO/E User's Guide*, and *z/OS ISPF User's Guide Volume I* for information about accessing TSO/E and ISPF interfaces. These guides describe how to use TSO/E and ISPF, including the use of keyboard shortcuts or function keys (PF keys). Each guide includes the default settings for the PF keys and explains how to modify their functions.

© Copyright IBM Corp. 1986, 2002

Notices

This information was developed for products and services offered in the USA.

IBM may not offer the products, services, or features discussed in this document in other countries. Consult your local IBM representative for information on the products and services currently available in your area. Any reference to an IBM product, program, or service is not intended to state or imply that only that IBM product, program, or service may be used. Any functionally equivalent product, program, or service that does not infringe any IBM intellectual property right may be used instead. However, it is the user's responsibility to evaluate and verify the operation of any non-IBM product, program, or service.

IBM may have patents or pending patent applications covering subject matter described in this document. The furnishing of this document does not give you any license to these patents. You can send license inquiries, in writing, to:

IBM Director of Licensing
IBM Corporation
North Castle Drive
Armonk, NY 10504-1785
USA

For license inquiries regarding double-byte (DBCS) information, contact the IBM Intellectual Property Department in your country or send inquiries, in writing, to:

IBM World Trade Asia Corporation
Licensing
2-31 Roppongi 3-chome, Minato-ku
Tokyo 106, Japan

The following paragraph does not apply to the United Kingdom or any other country where such provisions are inconsistent with local law:
INTERNATIONAL BUSINESS MACHINES CORPORATION PROVIDES THIS PUBLICATION "AS IS" WITHOUT WARRANTY OF ANY KIND, EITHER EXPRESS OR IMPLIED, INCLUDING, BUT NOT LIMITED TO, THE IMPLIED WARRANTIES OF NON-INFRINGEMENT, MERCHANTABILITY OR FITNESS FOR A PARTICULAR PURPOSE. Some states do not allow disclaimer of express or implied warranties in certain transactions, therefore, this statement may not apply to you.

This information could include technical inaccuracies or typographical errors. Changes are periodically made to the information herein; these changes will be incorporated in new editions of the publication. IBM may make improvements and/or changes in the product(s) and/or the program(s) described in this publication at any time without notice.

Any references in this information to non-IBM Web sites are provided for convenience only and do not in any manner serve as an endorsement of those Web sites. The materials at those Web sites are not part of the materials for this IBM product and use of those Web sites is at your own risk.

IBM may use or distribute any of the information you supply in any way it believes appropriate without incurring any obligation to you.

© Copyright IBM Corp. 1986, 2002

Licensees of this program who wish to have information about it for the purpose of enabling: (i) the exchange of information between independently created programs and other programs (including this one) and (ii) the mutual use of the information which has been exchanged, should contact:

IBM Corporation
Mail Station P300
2455 South Road
Poughkeepsie, NY 12601-5400
USA

Such information may be available, subject to appropriate terms and conditions, including in some cases, payment of a fee.

The licensed program described in this information and all licensed material available for it are provided by IBM under terms of the IBM Customer Agreement, IBM International Program License Agreement, or any equivalent agreement between us.

If you are viewing this information softcopy, the photographs and color illustrations may not appear.

Programming Interface Information

This publication is intended to help you understand the output from SMP/E processing.

This publication also documents intended Programming Interfaces that allow the customer to write programs to obtain the services of IBM SMP/E for z/OS and OS/390, V3R1. This Programming Interface information is identified where it occurs by an introductory statement to a chapter or section.

This publication also documents information that is **not** intended to be used as a Programming Interface of IBM SMP/E for z/OS and OS/390, V3R1. This information is identified where it occurs by an introductory statement to a chapter or section.

Trademarks

The following terms are trademarks of the IBM Corporation in the United States, other countries, or both:

BookManager
CICS
DATABASE 2
DB2
DFSMS
DFSMS/MVS
DFSMSdfp
DFSMSdss
IBM
IBMLink
IMS
OS/2
OS/390
RACF
RETAIN
SP

System/390
SystemPac
VTAM
z/OS

UNIX is a registered trademark of The Open Group in the United States and other countries.

Microsoft, Windows, Windows NT, and the Windows logo are trademarks of Microsoft Corporation in the United States, other countries, or both.

Other company, product, and service names may be trademarks or service marks of others.

Glossary

This glossary defines technical terms and abbreviations used in SMP/E documentation. If you do not find the term you are looking for, refer to the index of the appropriate SMP/E manual or view *IBM Glossary of Computing Terms*, located at:
http://www.ibm.com/networking/nsg/nsgmain.htm

Sequence of Entries: For clarity and consistency of style, this glossary arranges the entries alphabetically on a letter-by-letter basis. In other words, only the letters of the alphabet are used to determine sequence; special characters and spaces between words are ignored.

Organization of Entries: Each entry consists of a single-word or multiple-word term or the abbreviation or acronym for a term, followed by a commentary. A commentary includes one or more items (definitions or references) and is organized as follows:

1. An item number, if the commentary contains two or more items.
2. A usage label, indicating the area of application of the term, for example, “In programming,” or “In SMP/E.” Absence of a usage label implies that the term is generally applicable to SMP/E, to IBM, or to data processing.
3. A descriptive phrase, stating the basic meaning of the term. The descriptive phrase is assumed to be preceded by “the term is defined as ...” The part of speech being defined is indicated by the opening words of the descriptive phrase: “To ...” indicates a verb, and “Pertaining to ...” indicates a modifier. Any other wording indicates a noun or noun phrase.
4. Annotative sentences, providing additional or explanatory information.
5. References, directing the reader to other entries or items in the dictionary.

References: The following cross-references are used in this glossary:

Contrast with. This refers to a term that has an opposed or substantively different meaning.
Synonym for. This indicates that the term has the same meaning as a preferred term, which is defined in its proper place in the glossary.
Synonymous with. This is a backward reference from a defined term to all other terms that have the same meaning.
See. This refers you to multiple-word terms that have the same last word.
See also. This refers the reader to related terms that have a related, but not synonymous, meaning.
Deprecated term for or **Deprecated abbreviation for**. This indicates that the term or abbreviation should not be used. It refers to a preferred term, which is defined in its proper place in the glossary.

Selection of Terms: A term is a word or group of words to be defined. In this glossary, the singular form of the noun and the infinitive form of the verb are the terms most often selected to be defined. If the term may be abbreviated, the abbreviation is given in parentheses immediately following the term. The abbreviation is also defined in its proper place in the glossary.

A

ACCEPT. The SMP/E command used to install SYSMODs in the distribution libraries.

accept. In SMP/E, to install SYSMODs in the distribution libraries. This is done with the ACCEPT command.

accepted SYSMOD. A SYSMOD that has been successfully installed by the SMP/E ACCEPT command. Accepted SYSMODs do not have the ERROR flag set and are found as SYSMOD entries in the distribution zone.

Access method services (AMS). The system utility program used to support VSAM data sets.

AMS. Access method services.

APAR. Authorized program analysis report.

APAR fix. A temporary correction of a defect in an IBM system control program or licensed program that affects a specific user. An APAR fix is usually replaced later by a permanent correction called a PTF. APAR fixes are identified to SMP/E by the ++APAR statement.

applied SYSMOD. A SYSMOD that has been successfully processed by the SMP/E APPLY command. Applied SYSMODs do not have the ERROR flag set and are found as SYSMOD entries in the target zone.

© Copyright IBM Corp. 1986, 2002

APPLY. The SMP/E command used to install SYSMODs in the target libraries.

apply. In SMP/E, to install SYSMODs in the target libraries. This is done with the APPLY command.

archive. An archive is a network transportable file containing two files; a file attribute file (FAF) and and the data file that the FAF describes.

ASSEM entry. An SMP/E entry containing assembler statements that can be assembled to create an object module.

authorized program analysis report (APAR). A report of a problem caused by a suspected defect in a current unaltered release of a program. The correction is called an APAR fix.

B

BACKUP entries. A collection of SMP/E target zone entries that are copied into the SMPSCDS data set during APPLY processing before they are updated by inline JCLIN, a ++MOVE MCS, or a ++RENAME MCS, or before they are deleted by an element MCS with the DELETE operand.

BACKUP entries consist of:

- A SYSMOD entry indicating what entries have been added, deleted, or updated
- ASSEM entries for updated target zone ASSEM entries
- LMOD entries for updated target zone LMOD entries
- MAC entries for updated or deleted target zone MAC entries
- MOD entries for updated or deleted target zone MOD entries
- SRC entries for updated or deleted target zone SRC entries
- Data element entries for deleted target zone data element entries
- DLIB entries for updated target zone DLIB entries

BALR. Branch and link register commands.

base function. A SYSMOD defining elements of the base system or other products that were not previously present in the target libraries. Base functions are identified to SMP/E by the ++FUNCTION statement. SMP/E is an example of a base function.

base level system. The level of the target system modules, macros, source, and DLIBs created by system generation, to which function and service modifications are applicable.

base version of a load module. Some load modules include modules both explicitly (through INCLUDE statements) and implicitly (through a SYSLIB allocation). The base version of such a load module includes only the explicitly-defined modules for the load module. It is maintained by SMP/E in the SMPLTS data set. The base version of a load module is used with the SYSLIB allocation as input to the link-edit utility in order to build the load module in its target libraries.

binder. A program that processes the output of language translators and compilers into an executable program (load module). It is part of the DFSMS/MVS element of z/OS.

bypass. In SMP/E, to circumvent errors that would otherwise cause SYSMOD processing to fail. This is done by using the BYPASS operand on an SMP/E command.

C

causer SYSMOD. A SYSMOD identified by root cause analysis to be at the base of errors that caused other SYSMODs to fail. See *root cause analysis*.

CBPDO. MVS Custom-Built Product Delivery Offering.

CICS. Customer Information Control System.

CLEANUP. The SMP/E command used to delete entries from the SMPMTS, SMPSTS, and SMPSCDS data sets after a SYSMOD has been accepted into the related distribution zone.

CNTL. See *SMPCNTL*.

coexisting functions. Functions that meet these requirements: (1) they are for the same system or subsystem and have the same SREL value, (2) they do not delete or supersede each other and are not negative prerequisites, and (3) if they are base functions, they are for different products. See also *conditionally coexisting functions* and *unconditionally coexisting functions*.

comment statements. Special control statements that are coded as JCL comments and which are used to convey information to SMP/E during JCLIN processing.

conditional requisites. Requisites defined by an ++IF statement. These are requisites that must be installed if the functions specified on the ++IF statements are installed.

conditionally coexisting functions. Functions that coexist but do not have to be in the same zone.

consolidated software inventory. See *SMPCSI*.

corequisite SYSMODs. SYSMODs each of which can be installed properly only if the other is present. Corequisites are defined by the REQ operand on the ++VER statement.

corrective service. Any SYSMOD used to selectively fix a system problem. Generally, corrective service refers to APAR fixes.

cross-zone. (1) A target zone other than the set-to zone that defines a load module containing modules from set-to zone. Also called a *TIEDTO zone.* The modules were added to the load module through the SMP/E LINK command. The relationship between the cross-zone and the set-to zone is established through the TIEDTO subentry in their zone definition entries. See also *set-to zone* and *TIEDTO relationship*. (2) Pertaining to relationships between zones, especially as a result of conditional requisites (++IF statements) or LINK processing. See also *cross-zone requisite, cross-zone load module,* and *cross-zone module*.

cross-zone load module. A load module containing modules from a different zone as a result of LINK processing.

cross-zone module. A module included in a load module from a different zone as a result of LINK processing.

cross-zone requisite. A conditional requisite that must be installed in one zone because of another SYSMOD that is installed in a different zone. The REPORT command can be used to check information saved from ++IF statements and determine where any cross-zone requisites should be installed.

CSI. Consolidated software inventory data set. See *SMPCSI*.

D

data element. An element that is not a macro, module, or source—for example, a dialog panel or sample code.

DDDEF entry. An SMP/E entry containing the information SMP/E needs in order to dynamically allocate a particular data set.

DEBUG. The SMP/E command used to obtain additional information for problem determination—for example, to trace messages or take dumps.

debug. In SMP/E, to obtain additional information for problem determination—for example, to trace messages or take dumps. This is done with the DEBUG command.

definition side deck. A file in the hierarchical file system, a member of a partitioned data set, or a sequential data set that contains binder IMPORT control statements.

deleted function. In SMP/E, a function that was removed from the system when another function was installed. This is indicated by the DELBY subentry in the SYSMOD entry for the deleted function. See also *explicitly deleted function* and *implicitly deleted function*.

deleting function. A function that removes other functions from the system. This is done by specifying them on the DELETE operand of the ++VER statement.

dependent function. A function that introduces new elements or redefines elements of the base level system or other products. A dependent function cannot exist without a base function. Dependent functions are identified to SMP/E by the ++FUNCTION statement.

dialog. The interactive support provided by SMP/E through ISPF. Instead of entering specific commands and operands, you can use panels to specify the desired processing.

distribution library (DLIB). A library that contains the master copy of all the elements in a system. A distribution library can be used to create or back up a target library.

distribution zone. In SMP/E, a group of records in a CSI data set that describes the SYSMODs and elements in a distribution library.

DLIB. Distribution library.

DLIB entry. An SMP/E entry describing a distribution library that has been totally copied into a target library.

DLIBZONE entry. An SMP/E entry containing information used by SMP/E to process a specific distribution zone and the associated distribution libraries.

DLL. Dynamic link library

E

EC. Engineering change.

element. In SMP/E, part of a product, such as a macro, module, dialog panel, or sample code.

element MCS. An MCS used to replace or update an element.

element selection. The process by which SMP/E chooses the appropriate changes for an element affected by several SYSMODs being installed at the same time.

entry. In SMP/E, a collection of records in a CSI data set. An entry can be created, updated, or deleted by use of UCL statements.

environment. The functions (FMIDs) installed on a particular system or subsystem (SREL).

ERROR indicator. In SMP/E, an indicator in a target or distribution zone SYSMOD entry that shows that

SYSMOD processing failed. The ERROR indicator is set before SMP/E updates any libraries and is reset if processing is successful. If processing fails, it remains set to show that an error occurred.

ESO. Expanded service options.

exception SYSMOD. A SYSMOD that is in error or that requires special processing before it can be installed. ++HOLD and ++RELEASE statements identify exception SYSMODs.

EXCP. Execute channel programs.

expanded service options (ESO). A tape that includes preventive service PTFs. Where available, it replaces PUTs as the vehicle for delivering preventive service. An ESO contains PTFs and ++ASSIGN statements assigning source IDs for the PTFs. In the United States, this tape is available from the IBM Support Center and can be ordered either by subscription or as needed.

explicitly deleted function. A function deleted because it was specified on the DELETE operand of a ++VER statement in another SYSMOD.

exported zone. A zone copied into a sequential data set by use of the SMP/E ZONEEXPORT command.

external HOLDDATA. ++HOLD statements contained in SMPHOLD. Contrast with *internal HOLDDATA*.

F

FAF. file attribute file.

FE. Field engineering.

feature. See *dependent function*.

file attribute file. A file attribute file (FAF) is a file containing control statements that describe the attributes of the file contained in an SMP/E network transportable archive. The FAF is contained within the archive information about how the file was created.

File Transfer Protocol. File Transfer Protocol (FTP) is a protocol that defines the interactions necessary between a client and server to facilitate the exchange of binary and textual data files.

firewall. A firewall is an intermediate server that functions to isolate a secure network from an insecure network.

FTP. File Transfer Protocol.

FMID. Function modification identifier.

FMIDSET. A group of FMIDs to be used in processing an SMP/E command—for example, to indicate that SYSMODs applicable to certain functions should be installed.

FMIDSET entry. An SMP/E entry defining an FMIDSET.

function. In SMP/E, a product (such as a system component or licensed program) that can be installed in a user's system if desired. Functions are identified to SMP/E by the ++FUNCTION statement. Each function must have a unique FMID.

function modification identifier (FMID). The SYSMOD ID of a function SYSMOD. It identifies the function that currently owns a given element.

functionally higher SYSMOD. A SYSMOD that uses the function contained in an earlier SYSMOD (called the *functionally lower SYSMOD*) and contains additional functions as well.

functionally lower SYSMOD. A SYSMOD whose function is also contained in a later SYSMOD (called the *functionally higher SYSMOD*).

G

GENASM. A subentry in the MAC entry that lists the ASSEM or SRC entries that must be assembled if the macro is replaced or updated.

GENERATE. The SMP/E command used to create a job stream that builds a set of target libraries from a set of distribution libraries.

generate. In SMP/E, to create a job stream that builds a set of target libraries from a set of distribution libraries. This is done with the GENERATE command.

GIMUNZIP. An SMP/E service routine used to extract files contained in network transportable packages that were built using GIMZIP.

GIMZIP. An SMP/E service routine used to produce network transportable packages.

global zone. A group of records in a CSI data set used to record information about SYSMODs received for a particular system. The global zone also contains information that (1) enables SMP/E to access target and distribution zones in that system, and (2) enables you to tailor aspects of SMP/E processing.

GLOBALZONE entry. An SMP/E entry containing information that SMP/E uses to process the global zone, the associated target and distribution zones, and SMPPTS.

GTF. Generalized trace facility.

H

hashing. An operation that uses a one-way (irreversible) function on data, usually to reduce the length of the data and to provide a verifiable authentication value (checksum) for the hashed data.

header MCS. An ++APAR, ++FUNCTION, ++PTF, or ++USERMOD statement. The header MCS indicates the type of SYSMOD.

HFS. Hierarchical file system.

hierarchical file system element. An element that has a hierarchical file system as its “target library”.

hierarchy. In SMP/E, the top-down structure of function and service SYSMODs, in which each SYSMOD is dependent on the one above it.

higher functional level. An element version that contains all the functions of all other relevant versions of that element.

HOLDDATA. In SMP/E, MCSs used to indicate that certain SYSMODs contain errors or require special processing before they can be installed. ++HOLD and ++RELEASE statements are used to define HOLDDATA. SYSMODs affected by HOLDDATA are called *exception SYSMODs*.

HOLDDATA entry. An SMP/E entry containing ++HOLD statements that either were received from SMPHOLD (external HOLDDATA) or were within a SYSMOD that was received (internal HOLDDATA).

I

ICSF. Integrated Cryptographic Service Facility.

IFREQ. A conditional requisite. Conditional requisites are specified on the REQ operand of the ++IF statement.

IMASPZAP. The system utility program used to install superzaps, which are changes for modules, load modules, or CSECTs within modules.

implicitly deleted function. A function deleted because of its dependency on an explicitly deleted function that is specified on the DELETE operand of the ++VER statement.

imported zone. A zone copied from a sequential data set into another zone by use of the SMP/E ZONEIMPORT command.

IMS. Information Management System.

IMSGEN. IMS generation.

indicator. See *subentry indicator*.

in effect. Having control over SMP/E processing. For example, an OPTIONS entry is in effect if (1) it is specified on the SET command or (2) it is defined as the default OPTIONS entry for the set-to zone.

inline data. Information (such as utility control statements or code for an element) that is packaged directly after the associated MCS, rather than in a separate file or data set.

inline JCLIN. The JCL statements associated with a ++JCLIN statement. Inline JCLIN may immediately follow the ++JCLIN statement, or it may be in the RELFILE or TXLIB data set pointed to by the ++JCLIN statement. Inline JCLIN is used to update the target zone when a SYSMOD is applied, or the distribution zone when a SYSMOD is accepted. Contrast with *JCLIN input*.

inner macro. A macro invoked by another macro. In particular, inner macros are those that SMP/E does not detect during JCLIN processing of assembler job steps.

install. In SMP/E, to apply a SYSMOD to the target libraries or to accept a SYSMOD into the distribution libraries.

internal HOLDDATA. ++HOLD statements contained within a SYSMOD. Contrast with *external HOLDDATA*.

I/O. Input or output.

IOGEN. Input/output device generation.

IPL. Initial program load.

ISMD. IBM Software Manufacturing and Delivery (formerly called *PID*).

ISPF. Interactive System Productivity Facility.

ISPF/PDF. Interactive System Productivity Facility/Program Development Facility.

IVP. Installation verification procedure.

J

JCL. Job control language.

JCLIN. (1) The SMP/E command used to process data from SMPJCLIN. (2) The ++JCLIN statement, which is associated with JCLIN data that is included in a SYSMOD. (3) SMPJCLIN. See *SMPJCLIN*.

See also *inline JCLIN* and *JCLIN data*.

JCLIN data. The JCL statements associated with the ++JCLIN statement or saved in the SMPJCLIN data set. They are used by SMP/E to update the target zone when the SYSMOD is applied. Optionally, SMP/E can use JCLIN data to update the distribution zone when the SYSMOD is accepted.

JCLIN input. The JCL statements contained in SMPJCLIN and used as input for the JCLIN command. Contrast with *inline JCLIN*.

job control language (JCL). A problem-oriented language designed to express statements in a job that are used to identify the job or describe its requirements to an operating system.

L

licensed program. A program that performs a function for the user, and usually interacts with and relies upon the system control program or some other IBM-provided control program. Generally, a licensed program is a software package that can be ordered from the program libraries, such as IBM Software Distribution (ISMD). IMS and CICS are examples of licensed programs.

link library (LKLIB). A data set containing link-edited object modules.

LIST. The SMP/E command used to display entries in SMP/E data sets.

list. In SMP/E, to display entries in SMP/E data sets. This is done with the LIST command.

LKLIB. Link library.

LMOD. In SMP/E, an abbreviation for load module.

LMOD entry. An SMP/E entry containing all the information needed to replace or update a given load module.

load module. A computer program in a form suitable for loading into main storage for execution. It is usually the output of a link-edit utility.

LOG. (1) The SMP/E command used to write user-supplied information to the SMPLOG data set. (2) The SMPLOG data set. See *SMPLOG*.

lower functional level. An element version that is contained in a later element version.

M

MAC. The SMP/E entry or MCS that describes a macro.

macro. An instruction in a source language that is to be replaced by a defined sequence of instructions in the same source language.

MACUPD. The SMP/E MCS used to update a macro.

mass-mode processing. In SMP/E, processing that includes all eligible SYSMODs, regardless of whether they were individually selected.

master CSI. The CSI data set that contains the global zone.

MCS. Modification control statement.

MCS entry. An SMP/E entry containing a copy of a SYSMOD exactly as it was received from SMPPTFIN. MCS entries are in SMPPTS, which is used to store SYSMODs.

MOD. The SMP/E entry or MCS that describes an object module or a single-module load module.

MODID. Modification identifier.

modification. In SMP/E, an alteration or correction to a system control program, licensed program, or user program. Synonymous with *system modification* (SYSMOD).

modification control statement (MCS). An SMP/E control statement used to package a SYSMOD. MCSs describe the elements of a program and the relationships that program has with other programs that may be installed on the same system.

modification identifier (MODID). A list of SYSMOD IDs, including the last SYSMOD that totally replaced the element (RMID), any subsequent partial updates to the element (UMIDs), and the function that owns the element (FMID). MODIDs are contained in element entries.

modification level. A distribution of all temporary fixes that have been issued since the previous modification level. A change in modification level does not add new functions or change the programming support category of the release to which it applies. Contrast with *release* and *version*.

Note: Whenever a new release of a program is shipped, the modification level is set to 0. When the release is reshipped with the accumulated services changes incorporated, the modification level is incremented by 1.

module. Synonym for *object module* or *single-module load module*.

MTS. Macro temporary storage data set. See *SMPMTS*.

MTSMAC entry. An SMP/E entry that is a copy of a macro that resides only in a distribution library but is needed temporarily during APPLY processing. MTSMAC entries are in the SMPMTS data set.

MVS. Multiple Virtual Storage.

MVS Custom-Built Product Delivery Offering (CBPDO). A software delivery offering used to add products or service to an existing MVS, NCP, CICS, or IMS system.

N

NCP. Network Control Program.

negative prerequisite (NPRE). In SMP/E, a function that is mutually exclusive with another function. It is defined by the NPRE operand on the ++VER statement.

NPRE. Negative prerequisite.

O

object deck. Object module input to the link-edit utility that is placed in the input stream, in card format.

object module. A module that is the output from a language translator (such as a compiler or an assembler). An object module is in relocatable format with machine code that is not executable. Before an object module can be executed, it must be processed by the link-edit utility.

When an object module is link-edited, a load module is created. Several modules can be link-edited together to create one load module (for example, as part of SMP/E APPLY processing), or an object module can be link-edited by itself to create a single-module load module (for example, to prepare the module for shipment in RELFILE format or in an LKLIB data set or as part of SMP/E ACCEPT processing).

operating system. In SMP/E, the system updated by APPLY and RESTORE processing. It consists of the target libraries. Also called the target system.

OPTIONS entry. An SMP/E entry defining processing options that are to be used by SMP/E.

P

package attribute file. A package attribute file (PAF) is a file that contains control statements describing the contents of a network transportable package.

packaging. Adding the appropriate MCS statements to elements to create a SYSMOD, then putting the SYSMOD in the proper format on the distribution medium, such as a tape or direct access data sets.

PAF. package attribute file.

partitioned data set extended (PDSE). A system-managed data set containing an indexed directory and members that are similar to the directory and members of partitioned data sets. A PDSE can be used instead of a partitioned data set.

PE. See *program error PTF*.

PE-PTF. See *program error PTF*.

PID. The former name for ISD.

PRE. Prerequisite.

prerequisite (PRE). In SMP/E, a SYSMOD that must be installed before or along with another SYSMOD in order for that other SYSMOD to be successfully installed. It is defined by the PRE operand on the ++VER statement.

preventive service. (1) The mass installation of PTFs to avoid rediscoveries of the APARs fixed by those PTFs. (2) The SYSMODs delivered on the program update tape.

preventive service planning (PSP). Installation recommendations and HOLDDATA for a product or a service level. PSP information can be obtained through the IBM Support Center.

product. Generally, a software package, such as a licensed program or a user application. A product can contain one or more functions and can consist of one or more versions and releases.

product version. All the releases for a given version of a product.

program error PTF (PE-PTF). A PTF that has been found to contain an error. A PE-PTF is identified on a ++HOLD ERROR statement, along with the APAR that first reported the error.

program object. An executable program stored in a PDSE program library. It is similar to a load module, but has fewer restrictions. For SMP/E purposes, program objects are referred to as load modules.

program packaging. See *packaging*.

program product. The former term for licensed program.

program temporary fix (PTF). A temporary solution or bypass of a problem that may affect all users and that was diagnosed as the result of a defect in a current unaltered release of the program. In the absence of a new release of a system or component that incorporates the correction, the fix is not temporary but is the permanent and official correction mechanism. New elements can also be defined in a PTF. PTFs are identified to SMP/E by the ++PTF statement.

program update tape (PUT). The former vehicle for preventive service. See *expanded service options*.

PSP. Preventive service planning.

PSW. Program status word.

PTF. Program temporary fix.

PTS. PTF temporary store data set. See *SMPPTS*.

PTFIN. PTF input. See *SMPPTFIN*.

PUT. See *expanded service options*.

R

RACF. Resource Access Control Facility.

RECEIVE. The SMP/E command used to read in SYSMODs and other data from SMPPTFIN and SMPHOLD.

receive. In SMP/E, to read SYSMODs and other data from SMPPTFIN and SMPHOLD and store them on the global zone for subsequent SMP/E processing. This is done with the RECEIVE command.

regressed SYSMOD. A SYSMOD one or more of whose elements are modified by subsequent SYSMODs that are not related to it.

regressing SYSMOD. A SYSMOD that causes regression of previous modifications when it is installed.

regression. In SMP/E, the condition that occurs when an element is changed by a SYSMOD that is not related to SYSMODs that previously modified the element.

REJECT. The SMP/E command used to remove SYSMODs from the global zone and SMPPTS.

reject. In SMP/E, to remove SYSMODs from the global zone and SMPPTS and delete any related SMPTLIB data sets. This is done with the REJECT command.

related installation materials (RIMs). In IBM custom-built offerings, task-oriented documentation, jobs, sample exit routines, procedures, parameters, and examples developed by IBM.

related SYSMOD. A SYSMOD associated with other SYSMODs by the FMID, PRE, REQ, or SUP operands.

related zone. The zone named in the RELATED subentry of a TARGETZONE or DLIBZONE entry. For a target zone, the related zone is generally the distribution zone for the libraries used to create the target libraries. For a distribution zone, the related zone is generally the target zone for the libraries built from the distribution libraries.

relative file (RELFILE) format. A SYSMOD packaging method where elements and JCLIN data are in separate relative files from the MCSs. When SYSMODs are packaged in relative file format there is a file of MCSs for one or more SYSMODs, and one or more relative files containing unloaded source-code data sets and unloaded link-edited data sets containing executable modules. The relative files can be either unloaded files in IEBCOPY format, or they can be partitioned data sets. Relative file format is the typical method used for packaging function SYSMODs.

relative files (RELFILEs). Unloaded files containing modification text and JCL input data associated with a SYSMOD. These files are used to package a SYSMOD in relative file format.

release. A distribution of a new product or new function and APAR fixes for an existing product. Contrast with *modification level* and *version*.

replacement modification identifier (RMID). The SYSMOD ID of the last SYSMOD that completely replaced a given element.

REPORT. The SMP/E command used to obtain information about SYSMODs that have been installed. These are the types of REPORT commands:

- REPORT CALLLIBS: Identifies load modules that need to be relinked because implicitly-included modules in a particular library have been updated.
- REPORT CROSSZONE: Lists conditional requisites that must be installed in certain zones because of SYSMODs installed in other zones.
- REPORT ERRSYSMODS: Determines whether any SYSMODs already installed are now exception SYSMODs.
- REPORT SOURCEID: Lists the source IDs associated with SYSMODs in the specified zones.
- REPORT SYSMODS: Compares the SYSMODs installed in two target or distribution zones.

requisite. A SYSMOD that must be installed before or at the same time as the SYSMOD being processed. There are several types of requisites:

- Prerequisites, which are specified by the PRE operand on the SYSMOD's ++VER statement
- Corequisites, which are specified by the REQ operand on the SYSMOD's ++VER statement
- Conditional requisites, which are specified by the REQ operand on the SYSMOD's associated ++IF statement

requisite chain. A sequence of SYSMODs that are directly or indirectly identified as requisites for a given SYSMOD, (A SYSMOD may identify other SYSMODs as requisites, which in turn may have requisites of their own. The requisite chain extends from the initial SYSMOD, through the hierarchy of requisites, until no more SYSMODs are found that have requisites.) See *requisite*.

requisite set. The set of all SYSMODs on the requisite chain for a particular SYS

RESETRC. The SMP/E command used to set the return codes for the previous commands to zero, so that SMP/E can process the current command.

RESTORE. The SMP/E command used to remove applied SYSMODs from the target libraries.

restore. In SMP/E, to remove applied SYSMODs from the target libraries by use of the RESTORE command.

restore group. All the SYSMODs that have a direct or indirect relationship with a SYSMOD being restored by use of the GROUP operand.

RIM. Related installation material.

RMID. Replacement modification identifier.

RMF. Resource measurement facility.

root cause analysis. Processing done by SMP/E for the ACCEPT, APPLY, and RESTORE commands to identify causer SYSMODs (SYSMODs whose failure has led to the failure of other SYSMODs). The types of errors SMP/E analyzes to determine causer SYSMODs include the following:

- Held SYSMODs
- Missing requisite SYSMODs
- Utility program failures: copy, update, assembler, link, zap
- Out-of-space conditions: *x*37 abends
- Missing DD statements and other allocation errors
- ID errors (a SYSMOD does not supersede or specify as a prerequisite an RMID or a UMID)
- JCLIN failures (syntax errors)

RPL. Request parameter list.

RTM2WA. Recovery termination manager 2 work area.

S

SCDS. Save control data set. See *SMPSCDS*.

SCP. System control program.

select-mode processing. In SMP/E, processing that includes individually selected SYSMODs.

service. PTFs and APAR fixes.

service level. The FMID, RMID, and UMID values for an element. The service level identifies the owner of the element, the last SYSMOD to replace the element, and all the SYSMODs that have updated the element since it was last replaced.

service order relationship. A relationship among service SYSMODs that is determined by the PRE and SUP operands, and the type of SYSMOD.

service SYSMOD. Any SYSMOD identified by an ++APAR or ++PTF statement.

service update. The integration of available service into the current release of a function. Since this is not a new release of the function, it does not change the function's FMID.

SET. The SMP/E command used to indicate the zone to be processed.

set. In SMP/E, to indicate which zone should be processed by the subsequent commands. This is done with the SET command.

set-to zone. The zone that was specified on the previous SET command and that is currently being processed. Contrast with *cross-zone*.

SHA-1. Secure Hash Algorithm 1.

side deck. See *definition side deck*.

single-module load module. A load module created by link-editing a single object module by itself—for example, to prepare the module for shipment in RELFILE format or in an LKLIB data set or as part of SMP/E ACCEPT processing.

SMPCNTL. The SMP/E data set or file in the hierarchical file system that contains the SMP/E commands to be processed.

SMPCSI. The SMP/E data set that contains information about the structure of a user's system as well as information needed to install the operating system on a user's system. The SMPCSI DD statement refers specifically to the CSI that contains the global zone. This is also called the *master CSI*.

SMPDEBUG. The SMP/E data set or file in the hierarchical file system that contains a dump requested by the DEBUG command. Depending on the operands specified, it may contain (1) a dump of SMP/E control blocks and storage areas associated with the specified dump points or (2) a dump of the VSAM RPL control block for the specified SMP/E function.

SMP/E. A program product, or an element of OS/390 or z/OS, used to install software and software changes on z/OS systems. SMP/E consolidates installation data, allows more flexibility in selecting changes to be installed, provides a dialog interface, and supports dynamic allocation of data sets.

SMP/E commands. Commands defining the processing to be done by SMP/E, such as RECEIVE.

SMP/E entry. An entry in an SMP/E data set—for example, a MOD entry in a CSI data set.

SMPHOLD. SMPHOLD is the source for HOLDDATA (++HOLD and ++RELEASE statements) to be processed by the RECEIVE command. SMPHOLD may be a tape file, a data set, or one or more files in the hierarchical file system.

SMPJCLIN. The SMP/E data set or file in the hierarchical file system that contains a job stream of assembly, link-edit, and copy job steps. This data is typically the stage 1 output from the most recent full or

partial system generation. However, it may also be other data in a similar format, such as the output of the GENERATE command. This job stream is used as input to the JCLIN command to update or create entries in a target zone.

SMPLIST. The SMP/E data set or file in the hierarchical file system that contains the output of all LIST commands.

SMPLOG. The SMP/E data set that contains time-stamped records of SMP/E processing. The records in this data set can be written automatically by SMP/E or added by the user through the LOG command.

SMPLOGA. A secondary log data set for SMP/E processing. If SMPLOGA is defined, it is automatically used when the SMPLOG data set is full.

SMPLTS. The SMP/E data set used as a target load module library to maintain the base version of a load module that specifies a SYSLIB allocation in order to implicitly include modules.

SMPMTS. The SMP/E data set used as a target library for macros that exist only in a distribution library, such as macros in SYS1.AMODGEN. The SMPMTS enables the current version of these macros to be used for assemblies during APPLY processing.

SMPNTS. The SMPNTS is a directory structure and associated files contained in the hierarchical file system used for temporary storage of network transported packages that were received during SMP/E RECEIVE processing.

SMPOBJ. The SMP/E data set used for source-maintained products. SMPOBJ contains preassembled modules that can be used to avoid reassembling those modules. These modules must be in load module format—that is, in the same format as modules residing in the distribution library.

SMPOUT. The SMP/E data set or file in the hierarchical file system that contains messages issued during SMP/E processing. It may also contain a dump of the VSAM RPL, if a dump was taken. In addition, it may contain LIST output and reports if SMPLIST and SMPRPT are not defined.

SMPPARM. The data set that contains members to define parameters, such as macros, assembler operation codes, GIMDDALC control statements, and exit routines.

SMPPTFIN. SMPPTFIN is the source of SYSMODs and ++ASSIGN statements to be processed by the RECEIVE command. SMPPTFIN may be a tape file, a data set, or one or more files in the hierarchical file system.

SMPPTS. The SMP/E data set that contains SYSMODs received from SMPPTFIN. SMPPTS is the source of SYSMODs that are installed in the target and distribution libraries.

SMPPTS spill data sets. Optional SMP/E data sets that can be used to store SYSMODs when the SMPPTS data set becomes full.

SMPPUNCH. The SMP/E data set or file in the hierarchical file system that contains output from various SMP/E commands. This output generally consists of commands or control statements.

- GENERATE: A job stream for building target libraries
- REPORT: Commands for installing or listing SYSMODs
- UNLOAD: UCLIN statements for recreating the entries that were unloaded

SMPRPT. The SMP/E data set or file in the hierarchical file system that contains the reports produced during SMP/E processing.

SMPSCDS. The SMP/E data set that contains backup copies of target zone entries that are created during APPLY processing. These backup copies are made before the entries are (1) changed by inline JCLIN, a ++MOVE MCS, or a ++RENAME MCS, or (2) deleted by an element MCS with the DELETE operand. The backup copies are used during RESTORE processing to return the entries to the way they were before APPLY processing.

SMPSNAP. The SMP/E data set that is used for snap dump output. When a severe error such as an abend or severe VSAM return code occurs, SMP/E requests a snap dump of its storage before doing any error recovery. In addition, the DEBUG command can request a snap dump of SMP/E storage when specified messages are issued, or can request a snap dump of control blocks and storage areas associated with a specified dump point.

SMPSTS. The SMP/E data set used as a target library for source that exists only in a distribution library. The SMPSTS enables the current version of this source to be used for assemblies during APPLY processing.

SMPTLIB. The SMP/E data sets used as temporary storage for relative files loaded from SMPPTFIN during RECEIVE processing. The SMPTLIB data sets are deleted when the associated SYSMOD is deleted by REJECT, RESTORE, or ACCEPT processing.

SMPWRK1. The SMP/E data set used as temporary storage for macro updates and replacements that will be processed by an update or copy utility program. SMP/E places the input in SMPWRK1 during APPLY and ACCEPT processing before calling the utility.

SMPWRK2. The SMP/E data set used as temporary storage for source updates and source replacements

that will be processed by an update or copy utility program. SMP/E places the input in SMPWRK2 during APPLY and ACCEPT processing before calling the utility.

SMPWRK3. The SMP/E data set used as temporary storage for object modules supplied by a SYSMOD, object modules created by assemblies, and zap utility input following ++ZAP statements.

SMPWRK4. The SMP/E data set used as temporary storage for zap utility or link-edit utility input that contains EXPAND control statements.

SMPWRK6. The SMP/E data set used during ACCEPT and APPLY processing as temporary storage for inline replacements for data elements. SMP/E places the input in this data set so that it can be directly accessed and installed by the copy utility or SMP/E.

source. The source statements that constitute the input to a language translator for a particular translation.

source ID. A 1- to 8-character identifier that indicates how a SYSMOD was obtained—for example, from a particular service level in an ESO. A source ID is associated with a specific SYSMOD by the RECEIVE command or the ++ASSIGN statement.

SOURCEID. The operand used to refer to a source ID.

source module. The source statements that constitute the input to a language translator, such as a compiler or an assembler, for a particular translation.

SRC. The SMP/E entry or MCS statement that describes a source.

SRCUPD. The MCS used to update a source.

SREL. System release identifier.

Storage Management Subsystem (SMS). A DFSMS/MVS facility used to automate and centralize the management of storage. Using SMS, a storage administrator describes data allocation characteristics, performance and availability goals, backup and retention requirements, and storage requirements to the system through data class, storage class, management class, storage group, and ACS routine definitions.

STS. Source temporary store data set. See *SMPSTS*.

STSSRC entry. An SMP/E entry that is a copy of source that resides only in a distribution library but is needed temporarily during APPLY processing. STSSRC entries are in the SMPSTS data set.

stub entry. An element entry or LMOD entry that does not contain the basic information SMP/E requires in order to process the element or load module (such as FMID, RMID, or library names), but does contain other information, such as subentries describing cross-zone relationships.

stub load module. A load module that does not contain the modules needed to perform its basic functions, but does contain other modules, such as cross-zone modules.

subentry. A field in an SMP/E entry. Each subentry has associated with it a type and a value. The same subentry type may occur several times in a single entry, each time with a different value. For example, the modules supplied by a PTF are saved as MOD subentries in the PTF's SYSMOD entry. Some subentries occur only once within an entry, such as the FMID subentry in a target zone MOD entry.

subentry indicator. A subentry that does not have a data value associated with it. An example of an indicator is the ERROR indicator in the SYSMOD entry. An indicator is either on or off.

subentry list. Multiple occurrences of the same subentry type in an entry, each with a different value. For example, the modules supplied by a PTF are saved as names in the MOD subentry list within the SYSMOD entry for that PTF.

SUP. Supersede.

superseded-only SYSMOD. A SYSMOD that has not been installed, but that has been superseded by another SYSMOD that has been installed.

superseded SYSMOD. In SMP/E, a SYSMOD that is contained in or replaced by the SYSMOD or requisite set of SYSMODs currently being processed. This is indicated by the SUPBY subentry in the SYSMOD entry for the superseded SYSMOD. A superseded SYSMOD is functionally lower than the SYSMOD that superseded it.

superseding SYSMOD. In SMP/E, a SYSMOD that contains all the functions in another SYSMOD and is recognized as the equivalent of that other SYSMOD. The superseding SYSMOD uses SUP operand on its ++VER statement to specify the superseded SYSMOD.

superzap. A generic term for the process performed by IMASPZAP. It can also refer to the module updates processed by IMASPZAP.

SVC. Supervised call.

SVRB. Supervisor request block.

SYSGEN. System generation.

SYSLIB. (1) A subentry used to identify the target library in which an element is installed. (2) A concatenation of macro libraries to be used by the assembler. (3) A set of routines used by the link-edit utility to resolve unresolved external references.

SYSMOD. System modification.

SYSMOD entry. An SMP/E entry containing information about a SYSMOD that has been received into SMPPTS, accepted into the distribution libraries, or applied to the target libraries.

SYSMOD ID. System modification identifier.

SYSMOD packaging. See *packaging*.

SYSMOD selection. The process of determining which SYSMODs are eligible to be processed.

SYSPRINT. The data set that contains output from the utilities called by SMP/E.

SYSPUNCH. The temporary data set containing object modules assembled by running the job stream produced by system generation or the GENERATE command. These modules are not installed in the distribution libraries at ACCEPT time.

system control program (SCP). IBM-supplied programming that is fundamental to the operation and maintenance of the system. It serves as an interface with licensed programs and user programs and is available without additional charge.

system generation (SYSGEN). The process of selecting optional parts of an operating system and of creating a particular operating system tailored to the requirements of a data processing installation.

system modification (SYSMOD). The input data to SMP/E that defines the introduction, replacement, or update of elements in the operating system and associated distribution libraries to be installed under the control of SMP/E. A system modification is defined by a set of MCS.

system modification identifier (SYSMOD ID). The name that SMP/E associates with a system modification. It is specified on the ++APAR, ++FUNCTION, ++PTF, or ++USERMOD statement.

system release identifier (SREL). A 4-byte value representing the system or subsystem, such as Z038 for MVS-based products.

SYSUT1, SYSUT2, SYSUT3. Scratch data sets for SMP/E and the utilities it calls.

SYSUT4. A data set that is used instead of the SYSIN data sets when certain utilities are called.

T

target library. A library containing the executable code that makes up a system.

target system. The system updated during APPLY and RESTORE processing, also referred to as the operating system. See also target libraries.

target zone. In SMP/E, a group of records in a CSI data set that describes the SYSMODs, elements, and load modules in a target library.

TARGETZONE entry. An SMP/E entry containing information used by SMP/E to process a specific target zone and the associated target libraries.

TCP/IP. Transmission Control Protocol/Internet Protocol (TCP/IP) is a hardware independent communication protocol used between physically separated computers. It was designed to facilitate communication between computers located on different physical networks.

temporary data set. A work data set (SMPWRK1–SMPWRK6) or utility data set (SYSUT1–SYSUT4). Temporary data sets are allocated when processing for an SMP/E command begins, and deleted when processing is finished.

text library (TXLIB). A data set containing JCLIN input or replacements for macros, source, or object modules that have not been link-edited. It is used when the JCLIN or elements are provided in partitioned data sets rather than inline or in relative files.

TGTLIB. Target library.

TIEDTO relationship. A cross-zone relationship between two target zones created when the LINK command updates a load module in one of the zones to include modules from the other zone. This relationship is established through the TIEDTO subentry in the zone definition entries for each of the zones.

TIEDTO zone. See *cross-zone*.

TLIB. Temporary library. See *SMPTLIB*.

transformed data. Data processed by the GIMDTS service routine so that it can be packaged inline in fixed-block 80 records.

TSO. Time-sharing option.

TXLIB. Text library.

U

UCL. Update control language.

UCL statement. An SMP/E control statement used to define or change information in an SMP/E data set entry. UCL statements are coded between the UCLIN and ENDUCL commands. The UCL statement specifies the action to be taken (ADD, REP, or DEL), the entry to be modified, and any indicators and subentries to be changed.

UCLIN. The SMP/E command used to mark the beginning of UCL statements, which are used to make changes to entries in SMP/E data sets.

UMID. Update modification identifier.

unconditionally coexisting functions. Functions that coexist and must be in the same zone.

UNLOAD. The SMP/E command used to copy data out of SMP/E data set entries in the form of UCL statements.

unload. In SMP/E, to copy data out of SMP/E data set entries in the form of UCL statements, by use of the UNLOAD command.

update. In SMP/E, to change an existing element without replacing it.

update modification identifier (UMID). The SYSMOD ID of a SYSMOD that updated the last replacement of a given element.

user modification (USERMOD). A change constructed by a user to modify an existing function, add to an existing function, or add a user-defined function. USERMODs are identified to SMP/E by the ++USERMOD statement.

USERMOD. User modification.

UTILITY entry. An SMP/E entry containing information used by SMP/E to invoke a particular system utility program.

V

VERSION. An operand on the ++VER or element statement. VERSION specifies one or more SYSMODs containing elements that are functionally lower than elements in the SYSMOD that specifies the operand. The VERSION operand is also used to change ownership of elements.

version. A separate licensed program that is based on an existing licensed program and that usually has significant new code or new functions. Contrast with *release* and *modification level*.

versioned element. An element that is part of more than one function—for example, one that is part of a base function and a dependent function.

VSAM. Virtual Storage Access Method.

VTOC. Volume table of contents.

Z

ZAP. (1) The SMP/E MCS used to package an update for an object module. (2) The superzap control statement used to update an object module. (3) A shortened name for the superzap utility, which is used to install these updates. See *IMASPZAP*.

zone. A partition in a CSI data set.

ZONECOPY. The SMP/E command used to copy a zone from one CSI data set to another.

ZONEDELETE. The SMP/E command used to delete a zone from a CSI data set.

ZONEEDIT. The SMP/E command used to change the values for a subentry in all the DDDEF or UTILITY entries in a given zone.

ZONEEXPORT. The SMP/E command used to copy a zone into a sequential data set.

ZONEIMPORT. The SMP/E command used to load an exported zone from a sequential data set into another zone.

ZONEMERGE. The SMP/E command used to copy one zone into another, or to merge two zones into one.

ZONERENAME. The SMP/E command used to change the name of a zone.

ZONESET. A group of zones to be used when processing an SMP/E command. For example, it may define the zones that the REPORT command is to check for cross-zone requisites. A ZONESET may also define a group of zones to be checked or ignored by the REJECT command.

ZONESET entry. An SMP/E entry defining a ZONESET.

z/OS UNIX System Services (z/OS UNIX). The set of functions provided by the Shell and Utilities, kernel, debugger, file system, C/C++ Run-Time Library, Language Environment, and other elements of the z/OS operating system that allow users to write and run application programs that conform to UNIX standards.

Index

Special Characters

?PKGHASH
  tag syntax 437
++APAR MCS
  examples 7
  operands
    DESCRIPTION 6, 23
    FILES 6
    REWORK 7
    RFDSNPFX 7
    SYSMOD ID 7
  overview 6
  syntax 6
++ASMIN
  ASSEM entry 163
++ASSIGN MCS
  coding considerations 8
  examples 9
  operands
    SOURCEID 8
    TO 8
  overview 8
  syntax 8
++DELETE MCS
  coding considerations 18
  examples 19
  operands
    ALIAS 17
    name 18
    SYSLIB 18
  overview 17
  syntax 17
++ENDASMIN
  ASSEM entry 163
++ENDLMODIN
  LMOD entry 227
++FEATURE MCS
  coding considerations 22
  example 22
  operands 21
    DESCRIPTION 21
    FMID 21
    PRODUCT 21
    REWORK 22
  overview 21
  syntax 21
++FUNCTION MCS
  coding considerations 24
  examples 25
  operands
    FESN 23
    FILES 23
    REWORK 24
    RFDSNPFX 24
    SYSMOD ID 24
  overview 23
  syntax 23
++HOLD MCS
  coding considerations 41
  examples 41
  operands
    CLASS 37
    COMMENT 38
    DATE 39
    ERROR 39
    FMID 39
    REASON 39
    SYSMOD ID 41
    SYSTEM 39
    USER 39
  overview 37
  syntax 37
++IF MCS
  coding considerations 43
  examples 44
  operands
    FMID 43
    REQ 43
    THEN 43
  overview 43
  syntax 43
++JCLIN MCS
  coding considerations 47
  examples 47
  operands
    ASM 45
    CALLLIBS 45
    COPY 45
    LKED 46
    OPCODE 46
    RELFILE 46
    TXLIB 47
    UPDATE 47
  overview 45
  syntax 45
++LMODIN
  LMOD entry 227
++MAC MCS
  coding considerations 54
  example 54
  operands
    ASSEM 50
    DELETE 51
    DISTLIB 51
    DISTMOD 51
    DISTSRC 51
    MALIAS 52
    name 52
    PREFIX 52
    RELFILE 53
    RMID 53
    SSI 53
    SYSLIB 53
    TXLIB 53
    UMID 53

© Copyright IBM Corp. 1986, 2002

++MAC MCS *(continued)*
operands *(continued)*
VERSION 53
overview 50
syntax 50
++MACUPD MCS
coding considerations 58
example 59
operands
ASSEM 57
DISTLIB 57
DISTMOD 58
DISTSRC 58
MALIAS 58
name 58
PREFIX 58
SYSLIB 58
overview 57
syntax 57
++MOD MCS
coding considerations 66
examples 66
operands
CSECT 62
DALIAS 62
DELETE 62
DISTLIB 62
LEPARM 63
LKLIB 64
LMOD 65
name 65
RELFILE 65
RMID 65
TALIAS 65
TXLIB 66
UMID 66
VERSION 66
overview 61
syntax 61
++MOVE MCS
coding considerations 71
examples 71
operands
DISTLIB 70
FMID 70
LMOD 70
MAC 70
MOD 70
name 71
SRC 70
SYSLIB 71
TODISTLIB 71
TOSYSLIB 71
overview 70
syntax 70
++NULL MCS
overview 73
syntax 73
++PRODUCT MCS
coding considerations 76
example 76
++PRODUCT MCS *(continued)*
operands 74
DESCRIPTION 74
PRODSUP 75
REWORK 76
SREL 75
URL 75
VENDOR 75
overview 74
syntax 74
++PROGRAM MCS
coding considerations 79
examples 80
operands
ALIAS 77
DELETE 77
DISTLIB 78
FROMDS 78
LKLIB 78
name 79
RELFILE 79
RMID 79
SYSLIB 79
VERSION 79
overview 77
syntax 77
++PTF MCS
coding considerations 83
examples 83
operands
DESCRIPTION 82
FILES 82
REWORK 83
RFDSNPFX 83
SYSMOD ID 83
overview 82
syntax 82
++RELEASE MCS
coding considerations 87
examples 88
operands
DATE 86
ERROR 85
FMID 86
REASON 86
SYSMOD ID 87
SYSTEM 85
USER 85
overview 85
syntax 85
++RENAME MCS
coding considerations 90
examples 91
operands
oldname 90
TONAME 90
overview 90
syntax 90
++SRC MCS
coding considerations 94
examples 95

++SRC MCS *(continued)*
operands
DELETE 92
DISTLIB 92
DISTMOD 93
name 93
RELFILE 93
RMID 94
SSI 94
SYSLIB 94
TXLIB 94
UMID 94
VERSION 94
overview 92
syntax 92
++SRCUPD MCS
coding considerations 97
examples 98
operands
DISTLIB 97
DISTMOD 97
name 97
SYSLIB 97
overview 97
syntax 97
++USERMOD MCS
coding considerations 101
examples 101
operands
DESCRIPTION 100
FILES 100
REWORK 101
RFDSNPFX 101
SYSMOD ID 101
overview 100
syntax 100
++VER MCS
coding considerations 105
examples 106
operands
DELETE 103
FMID 103
NPRE 104
PRE 104
REQ 104
SREL 104
SUP 105
VERSION 105
overview 103
syntax 103
++ZAP MCS
coding considerations 110
examples 111
operands
DALIAS 109
DISTLIB 109
name 109
TALIAS 109
overview 109
syntax 109

A

AC=1
LMOD entry 223
MOD entry 250
ACCDATE
SYSMOD entry
distribution zone 294
ACCEPT
SYSMOD entry
distribution zone 291
accessibility 465
ACCID
SYSMOD entry
global zone 304
ACCJCLIN
DLIBZONE entry 195
ACCTIME
SYSMOD entry
distribution zone 294
ACTION reason ID 40, 86, 460
ALIAS
++DELETE MCS operand 17
++PROGRAM MCS operand 77
data element entry 171
data element MCS operand 14
PROGRAM entry 278
SELECT control statement operand 447
alias names
++DELETE MCS operand 17
load modules 65
ALIASES
LMOD entry 224
ALIGN2
LMOD entry 224
MOD entry 250
allocating data sets
DDDEF entry 177
summary 125
AMODE=24
LMOD entry 224
MOD entry 250
AMODE=31
LMOD entry 224
MOD entry 250
AMODE=64
LMOD entry 224
MOD entry 250
AMODE=ANY
LMOD entry 224
MOD entry 250
AMODE=MIN
LMOD entry 224
MOD entry 250
AMS utility
default values 265, 318, 456
OPTIONS entry 265
UTILITY entry for 265
AO reason ID 40, 86, 461
APAR fixes
defining 6
MCS statement for 6

APAR fixes *(continued)*
naming conventions 464
SYSMOD entry for
distribution zone 291
global zone 304
target zone 291
APPDATE
SYSMOD entry
target zone 294
APPID
SYSMOD entry
global zone 304
application programming interface
for SMP/E CSI 327
for SMP/E exit routines 407
for SMP/E shell scripts 381
library change file records 387
APPLY
SYSMOD entry
target zone 291
APPLY command
LEPARM processing 67
APPTIME
SYSMOD entry
target zone 294
ARCHDEF
tag syntax 419, 436
archive file 439
archive files
contents of 430
creating 429
extracting data from 417
ASM
++JCLIN MCS operand 45
OPTIONS entry 265
UTILITY entry for 318
ASMA90 utility
See assembler utility
ASSEM
++MAC MCS operand 50
++MACUPD MCS operand 57
SYSMOD entry
distribution zone 291
target zone 291
ASSEM entry
listing 164
subentries
ASSEMBLER INPUT 163
LASTUPD 163
LASTUPDTYPE 163
summary 163
UCLIN for 166
unloading 165
ASSEMBLE
MOD entry 248
assembler
data structures in 367
sample GIMAPI program 369
ASSEMBLER INPUT
ASSEM entry 163
assembler OPCODEs
in SMPPARM 121
assembler utility
++JCLIN MCS operand 45
default values 265, 318, 320, 456
OPTIONS entry 265
specifying on JCLIN 45
UTILITY entry for 265, 318

B

BACKUP entries
listing 168
subentries 168
summary 168
UCLIN for 169
BINARY
hierarchical file system element entry 209
hierarchical file system element MCS operand 28
binary data
in CLIENT 125
in SERVER 127
in SMPCNTL 127
in SMPHOLD 131
in SMPJCLIN 131
in SMPPTFIN 137
in SYSIN 147
binder
See also link-edit utility
default values 456
UTILITY entry for 319
BLOCK
DDDEF entry 177
BMPTZN option
of GIMXTRX 426
BYPASS
SYSMOD entry
distribution zone 292
target zone 292

C

C
data structures in 363
sample GIMAPI program 369
CALL
effect of CALLLIBS subentry on 318
LMOD entry 224
CALLLIBS
LMOD entry 222
specifying on JCLIN 45
CASE
LMOD entry 224
CATALOG
DDDEF entry 177
CBPDO
Recommended Service Upgrade 462
ccc value of FMID 464
CHANGEFILE
OPTIONS entry 265

CHANGEFILE(YES) subentry
required for library change file records 387
CIFREQ
SYSMOD entry
distribution zone 292
target zone 292
CLASS
++HOLD MCS operand 37
naming conventions 462
values
ERREL 38, 462
HIPER 38, 462
PE 38, 462
UCLIN 38, 462
YR2000 38, 462
CLIENT, defining 125
CLIST data element
installing in variable block library 10
COMMENT
++HOLD MCS operand 38
COMP
OPTIONS entry 266
UTILITY entry 318
COMPACT
OPTIONS entry 266
COMPACT option
of GIMCPTS 413
compacting SMPPTS data set
with GIMCPTS 413
COMPAT
LMOD entry 225
MOD entry 251
compress utility
default values 266, 318, 456
OPTIONS entry 266
UTILITY entry for 266, 318
CONCAT
DDDEF entry 178
concatenating data sets
DDDEF entry 178
not allowed for SMPPTS spill data sets 139
SYSLIB data sets
++MAC 54
++MACUPD 59
order 147
SMPMTS 134
use 147
conditional requisites
defining 43
COPY
++JCLIN MCS operand 45
INVOKE control statement operand 446
LMOD entry 222
OPTIONS entry 266
UTILITY entry for 318
COPY control statement
for GIMIAP 446
copy utility
default values 266, 318, 456
OPTIONS entry 266
specifying on JCLIN 45
copy utility *(continued)*
UTILITY entry for 266, 318
corequisite SYSMODs
++IF MCS 43
defining 104
CSECT
++MOD MCS operand 62
MOD entry 248
CSI
application programming interface for 327
ASSEM entry
distribution zone 163
target zone 163
data element entry
distribution zone 171
target zone 171
DDDEF entry
distribution zone 177
global zone 177
target zone 177
defining 127
DLIB entry
distribution zone 191
target zone 191
DLIBZONE entry 195
FEATURE entry 199
FMIDSET entry 201
GIMAPI for 327
GLOBALZONE entry 204
HOLDDATA entry 219
LMOD entry
distribution zone 222
target zone 222
parameter
EXEC statement for GIMSMP 411
PRODUCT entry 275
PROGRAM entry
distribution zone 278
target zone 278
CYLINDERS
DDDEF entry 177

D

DALIAS
++MOD MCS operand 62
++ZAP MCS operand 109
MOD entry 249
data element entry
listing 172
subentries 171
summary 171
UCLIN for 175
unloading 174
data element MCS
coding considerations 16
examples 16
operands
ALIAS 14
DELETE 14
DISTLIB 14

data element MCS *(continued)*
operands *(continued)*
FROMDS 14, 29, 46, 51, 63, 93
name 15
RELFILE 15
RMID 15
SYSLIB 15
TXLIB 15
VERSION 16
overview 10
syntax 13
data elements
adding 10, 16
defining 10
deleting
data element MCS 14
listing 172
renaming 16, 90
replacing
data element MCS 10
SYSMOD entry
distribution zone 292
global zone 305
target zone 292
unloading 174
data set organization 151
data sets
CLIENT 125
defining 125
distribution library 125
INFILE 125
link library 126
LKLIB 126
OUTFILE 126
SERVER 127
SMPCNTL 127
SMPCSI 127
SMPDATA1 128
SMPDATA2 129
SMPDEBUG 130
SMPDIR 130
SMPHOLD 131
SMPJCLIN 131
SMPLIST 131
SMPLOG 132
SMPLOGA 132
SMPLTS 133
SMPMTS 134
SMPnnnnn 146
SMPNTS 135
SMPOBJ 135
SMPOUT 136
SMPPARM 136
SMPPTFIN 137
SMPPTS 138
SMPPTS spill 138
SMPPUNCH 139
SMPRPT 140
SMPSCDS 140
SMPSNAP 141
SMPSTS 141
data sets *(continued)*
SMPTLIB 141
SMPTLOAD 143
SMPWRK1 144
SMPWRK2 144
SMPWRK3 145
SMPWRK4 146
SMPWRK6 146
SYSIN 147
SYSLIB 147
SYSPRINT 147
SYSPUNCH 148
SYSUT1 148
SYSUT4 149
target library 149
text library 150
TXLIB 150
zonename 150
data structures
for QUERY command 329
in assembler 367
in C 363
in PL/I 365
data transformation service routine (GIMDTS) 415
DATACLAS
DDDEF entry 178
DATASET
DDDEF entry 178
DATE
++HOLD MCS operand 39
++RELEASE MCS operand 86
DATE parameter, EXEC statement for GIMSMP 411
DB2BIND reason ID 40, 86, 461
DC
LMOD entry 225
MOD entry 251
DDDEF entry
listing 182
subentries
BLOCK 177
CATALOG 177
CONCAT 178
CYLINDERS 177
DATACLAS 178
DATASET 178
DELETE 177
DIR 179
DSNTYPE 179
DSPREFIX 179
KEEP 177
MGMTCLAS 180
MOD 180
NEW 180
OLD 180
PATH 180
PROTECT 181
SHR 180
SPACE 181
STORCLAS 181
SYSOUT 181
TRACKS 177

DDDEF entry *(continued)*
subentries *(continued)*
UNIT 182
VOLUME 182
WAIT 182
summary 177
UCLIN for
distribution zone 185
global zone 185
target zone 185
unloading 184
default utilities used by SMP/E 318
defaults
OPTIONS entry
distribution zone 195
global zone 204
on the SET command 265
target zone 314
SMPTLIB
data set space 267
disposition 142
subentries
NOPURGE 268
NOREJECT 268
PAGELEN 269
PEMAX 269
RETRYDDN 270
SAVEMTS 270
SAVESTS 270
SUPPHOLD 270
utility programs
access method services 265, 318, 456
assembler 265, 318, 320, 456
binder link-edit utility 456
compress 266, 318, 456
copy 266, 318, 456
hierarchical file system copy utility 456
link-edit utility 268, 318, 320, 456
retry 270, 318, 456
superzap 271, 318, 456
update 270, 318, 456
defining data sets
data set descriptions 125
DDDEF entry 177
DEIINST job, built by GENERATE 445
DELBY
SYSMOD entry
distribution zone 292
target zone 292
DELETE
++MAC MCS operand 51
++MOD MCS operand 62
++PROGRAM MCS operand 77
++SRC MCS operand 92
++VER MCS operand 103
data element MCS operand 14
DDDEF entry 177
hierarchical file system element MCS operand 29
MCS statement 17
SYSMOD entry
distribution zone 292
DELETE *(continued)*
SYSMOD entry *(continued)*
global zone 305
target zone 292
DELETE reason ID 40, 86, 461
deleting elements
data elements 14
hierarchical file system elements 29
macros 51
modules 62
modules, MCS for 69
source 92
deleting functions
++VER MCS 103
dummy function SYSMOD 107
example of 107
deleting load modules
++DELETE MCS 17
DELLMOD
SYSMOD entry
distribution zone 292, 305
target zone 292, 305
DEP reason ID 40, 86, 461
DESCRIPTION
++APAR MCS operand 6, 23
++FEATURE MCS operand 21
++PRODUCT MCS operand 74
++PTF MCS operand 82
++USERMOD MCS operand 100
FEATURE entry 199
PRODUCT entry 275
SYSMOD entry
distribution zone 292, 305
target zone 292, 305
DIR
DDDEF entry 179
directory information for pathname 180
disability 465
DISTLIB
++MAC MCS operand 51
++MACUPD MCS operand 57
++MOD MCS operand 62
++MOVE MCS operand 70
++PROGRAM MCS operand 78
++SRC MCS operand 92
++SRCUPD MCS operand 97
++ZAP MCS operand 109
data element entry 171
data element MCS operand 14
hierarchical file system element entry 209
hierarchical file system element MCS operand 29
MAC entry 240
MOD entry 249
PROGRAM entry 278
SRC entry 283
DISTMOD
++MAC MCS operand 51
++MACUPD MCS operand 58
++SRC MCS operand 93
++SRCUPD MCS operand 97

distribution libraries
  defining 125
distribution zone
  ASSEM entry 163
  data element entry 171
  DDDEF entry 177
  DLIB entry 191
  DLIBZONE entry 195
  hierarchical file system element entry 209
  LMOD entry 222
  MAC entry 240
  MOD entry 248
  PROGRAM entry 278
  SRC entry 283
  SYSMOD entry 291
  zone description provided by user 196
DISTSRC
  ++MAC MCS operand 51
  ++MACUPD MCS operand 58
DLIB entry
  listing 192
  subentries
    LASTUPD 191
    LASTUPDTYPE 192
    SYSLIB 192
    UCL syntax 191
  summary 191
  UCLIN for 194
  unloading 193
DLIBZONE entry
  listing 196
  subentries
    ACCJCLIN 195
    name 195
    OPTIONS 195
    RELATED 195
    SREL 196
    UCL syntax 195
    ZDESC 196
  summary 195
  UCLIN for 197
DLMOD
  SYSMOD entry
    distribution zone 292, 305
    target zone 292, 305
DOC reason ID 40, 86, 461
DSNTYPE
  DDDEF entry 179
DSPREFIX
  conflict with RFDSNPFX value 266
  DDDEF entry (global zone only) 179
  OPTIONS entry 266
  SYSMOD entry
    global zone 308
DSSPACE
  OPTIONS entry 266
dummy data sets
  defined in DDDEF entry 179
  not allowed for SMPPTS 138
  not allowed for SMPPTS spill data sets 139
dummy function SYSMOD to delete another function 107
dummy volumes
  restriction for SMPTLIB data sets 142
DYNAM
  LMOD entry 225
dynamic allocation
  CSI parameter on EXEC statement for GIMSMP 411
  DDDEF entry 177
  specifying data sets in GIMDDALC 113

E

EC reason ID 40, 86, 461
elements 69
  deleting
    data elements, MCS for 14
    hierarchical file system elements, MCS for 29
    macros, MCS for 51
    modules, MCS for 62
    source, MCS for 92
  moving
    ++MOVE MCS 70
  renaming
    data elements, MCS for 16
    hierarchical file system elements, MCS for 35
    macros, MCS for 56
    modules, MCS for 68
    source, MCS for 95
ELEMMOV
  SYSMOD entry
    distribution zone 293, 305
    target zone 293, 305
EMOVE
  SYSMOD entry
    distribution zone 293, 305
    target zone 293, 305
END
  EXEC statement parameter for GIMSMP 412
ENH reason ID 40, 86, 461
Enhanced HOLDDATA
  in ++HOLD MCS 38
entries
  ASSEM entry 163
  BACKUP entries 168
  CSI 153
  data element entry 171
  DDDEF entry 177
  DLIB entry 191
  DLIBZONE entry 195
  FEATURE entry 199
  FMIDSET entry 201
  GLOBALZONE entry 204
  hierarchical file system element entry 209
  HOLDDATA entry 219
  LMOD entry 222
  MAC entry 240
  MCS entry 246
  MOD entry 248
  MTSMAC entry 263

entries *(continued)*
OPTIONS entry 265
PRODUCT entry 275
PROGRAM entry 278
relationship between
distribution zone 153
global zone 153
target zone 153
SMPMTS 263
SMPPTS 246
SMPSCDS 168
SMPSTS 289
SRC entry 283
STSSRC entry 289
SYSMOD entry
distribution zone 291
global zone 304
target zone 291
TARGETZONE entry 314
UTILITY entry 318
ZONESET entry 325
entry types valid for QUERY command 333
environment
defining 103
EPARM
SELECT control statement operand 447
ERREL class value 38, 462
ERROR
See also error reason IDs
++HOLD MCS operand 39
++RELEASE MCS operand 85
reason IDs 39, 86, 460
SYSMOD entry
distribution zone 293
global zone 305
target zone 293
error reason IDs
naming conventions 460
exception SYSMOD management
++HOLD MCS 37, 85
operands 37, 85
exception SYSMODs
holding 37
releasing 85
EXEC statement
CSI=dsname 411
DATE=date 411
LANGUAGE 411
PARM 411, 412
PROCESS=END 412
PROCESS=WAIT 412
EXIT reason ID 40, 87, 461
exit routines
specifying in GIMEXITS
summary 117
exit routines for SMP/E 407
parameter list mapping 407
RECEIVE exit (Exit 1) 407
Retry Exit (Exit 2) 409
summary 407
EXPAND option
of GIMCPTS 414
EXPAND statement
++ZAP input 110
expanding SMPPTS data set
with GIMCPTS 413
EXRF reason ID 40, 87, 461
EXRTYDD
OPTIONS entry 267
extensible stylesheet language (XSL) file
browser for 438
definition of 434
external HOLDDATA 37, 219

F

FEATURE
SYSMOD entry 293, 305
FEATURE entry
listing 199
subentries
DESCRIPTION 199
FMID 199
name 199
PRODUCT 199
RECDATE 199
RECTIME 199
REWORK 199
UCLDATE 199
UCLTIME 199
summary 199
UCLIN for 200
FESN
++FUNCTION MCS operand 23
SYSMOD entry
distribution zone 293
global zone 305
target zone 293
FETCHOPT
LMOD entry 225
MOD entry 251
file attribute file
definition of 440
example of 443
name of 439
FILEATTR
tag syntax 441
FILEDATA operand
for CLIENT 125
for SERVER 127
for SMPCNTL 127
for SMPDEBUG 130
for SMPHOLD 131
for SMPJCLIN 131
for SMPLIST 132
for SMPOUT 136
for SMPPTFIN 137
for SMPPUNCH 140
for SMPRPT 140
for SYSIN 147

FILEDEF
  tag syntax 432
FILELIST
  tag syntax 441
FILES
  ++APAR MCS operand 6
  ++FUNCTION MCS operand 23
  ++PTF MCS operand 82
  ++USERMOD MCS operand 100
FILL
  LMOD entry 225
  MOD entry 251
filter parameter
  of QUERY command 331
FMID
  ++FEATURE MCS operand 21
  ++HOLD MCS operand 39
  ++IF MCS operand 43
  ++MOVE MCS operand 70
  ++RELEASE MCS operand 86
  ++VER MCS operand 103
  data element entry 171
  FEATURE entry 199
  FMIDSET entry 201
  GLOBALZONE entry 204
  hierarchical file system element entry 209
  MAC entry 240
  MOD entry 249
  PROGRAM entry 278
  SRC entry 283
  SYSMOD entry
    distribution zone 293
    global zone 305
    target zone 293
FMIDSET entry
  listing 201
  subentries
    FMID 201
    UCL syntax 201
  summary 201
  UCLIN for 202
FREE command
  of GIMAPI 359
FROMDS
  ++PROGRAM MCS operand 78
  data element MCS operand 14, 29, 46, 51, 63, 93
FROMLIB
  COPY control statement operand 447
FULLGEN reason ID 40, 87, 461
FUNCTION
  MCS statement 23
  SYSMOD entry
    distribution zone 293
    global zone 306
    target zone 293
function SYSMODs
  deleting
    ++VER MCS 103
  naming conventions 463
functions
  defining 23

G

GENASM
  MAC entry 240
GIMAPI
  data structures for 327
  FREE command of 359
  overview of 327
  QUERY command of 327
  sample assembler program 369
  sample C program 369
  sample PL/I program 369
  used by GIMXTRX 426
  VERSION command of 360
GIMCPTS 413
GIMDDALC control statements
  defined in SMPPARM 113
GIMDDALC member
  sample 116
  use of 113
GIMDFUT 455
GIMDTS
  inline data elements 16, 34
  inline program elements 79
  summary 415
GIMEXITS control statements
  defined in SMPPARM 117
GIMEXITS member
  in SMPPARM 117
  sample 119
  specifying exit routines in
    control statements for 117
    RECEIVE exit routine 407
    Retry exit routine 409
  use of 118
GIMFAF.XML 439
GIMIAP 445
GIMMPUXP 407
GIMOPCDE
  sample member supplied 121, 137
    overriding values in, example of 123
GIMOPCDE members
  operands 122
GIMPAF.XML
  browser for 438
  definition of 434
GIMSMP 411
GIMUNZIP
  example of using 420
  package control tags 419
  processing 421
  sample RECEIVE job for 421
  summary 417
  SYSIN data set for 147
  tag syntax 419
  use of ICSF 417
GIMUTTBL 319, 455
GIMXTRX 422
  calling 422
  processing 425
GIMZIP
  calling 430

GIMZIP *(continued)*
example of using 432
package control tags 431
processing 433
sample job stream 433
summary 429
SYSIN data set for 147
tag syntax 431
global zone
DDDEF entry 177
FEATURE entry 199
FMIDSET entry 201
GLOBALZONE entry 204
HOLDDATA entry 219
OPTIONS entry 265
PRODUCT entry 275
SYSMOD entry 304
UTILITY entry 318
zone description provided by user 204
ZONESET entry 325
GLOBALZONE entry
listing 205
subentries
FMID 204
OPTIONS 204
SREL 204
UCL syntax 204
ZONEDESCRIPTION 204
ZONEINDEX 205
summary 204
UCLIN for 206

H

HASH option
of GIMUNZIP 418
HEWLH096 utility
See link-edit utility
HFSCOPY
INVOKE control statement operand 446
OPTIONS entry 267
HFSINST job, built by GENERATE 445
hierarchical file system
copy utility
default values 318, 456
interaction with hierarchical file system element entry 320
OPTIONS entry 267
UTILITY entry for 267
data sets residing in
CLIENT 125
SERVER 127
SMPCNTL 127
SMPDEBUG 130
SMPHOLD 131
SMPJCLIN 131
SMPLIST 132
SMPOUT 136
SMPPTFIN 137
SMPPUNCH 140
SMPRPT 140
hierarchical file system *(continued)*
data sets residing in *(continued)*
SYSIN 147
MCS statement 26
placing pre-built program object in 34
syntax 27
hierarchical file system element entry
hierarchical file system element MCS 26
listing 213
subentries
BINARY 209
DISTLIB 209
FMID 209
LASTUPD 210
LASTUPDTYPE 210
LINK 210
PARM 210
RMID 211
SHSCRIPT 211
SYMLINK 211
SYMPATH 212
SYSLIB 212
TEXT 209
UCL syntax 209
summary 209
unloading 215
hierarchical file system element MCS
coding considerations 34
examples 34
operands
BINARY 28
DELETE 29
DISTLIB 29
LINK 30
name 30
PARM 31
RELFILE 31
RMID 31
SHSCRIPT 31
SYMLINK 32
SYMPATH 32
SYSLIB 33
TEXT 33
TXLIB 34
VERSION 34
overview 26
hierarchical file system elements 26
adding 26, 35
defining 26
deleting 29
example of symbolic link 35
hierarchical file system element MCS 29
renaming 35, 90
replacing
hierarchical file system element MCS 26
SYSMOD entry
distribution zone 293
global zone 306
target zone 293
HIPER class value 38, 462

HOBSET
LMOD entry 225
MOD entry 251
HOLD
See HOLD reason IDs
HOLD reason IDs
class values
++HOLD MCS 37
ERREL 38, 462
HIPER 38, 462
naming conventions 462
PE 38, 462
UCLIN 38, 462
YR2000 38, 462
error reason IDs
++HOLD MCS 39
++RELEASE MCS 86
naming conventions 460
naming conventions 460
system reason IDs
++HOLD MCS 39
++RELEASE MCS 86
ACTION 40, 86, 460
AO 40, 86, 461
DB2BIND 40, 86, 461
DELETE 40, 86, 461
DEP 40, 86, 461
DOC 40, 86, 461
EC 40, 86, 461
ENH 40, 86, 461
EXIT 40, 87, 461
EXRF 40, 87, 461
FULLGEN 40, 87, 461
IOGEN 40, 87, 461
IPL 40, 87, 461
MSGSKEL 41, 87, 461
naming conventions 460
RESTART 41, 87, 462
user reason IDs
++HOLD MCS 41
++RELEASE MCS 87
naming conventions 462
HOLDDATA
See also HOLD reason IDs
external 37, 219
internal 37, 88, 219
HOLDDATA entry
listing 219
saving after ACCEPT processing (NOPURGE) 268
summary 219
HOLDERROR
SYSMOD entry
global zone 306
HOLDSYSTEM
SYSMOD entry
global zone 306
HOLDUSER
SYSMOD entry
global zone 306

I

ICSF
use by GIMUNZIP 417
use by GIMZIP 430
IDCAMS utility
See AMS utility
IEBCOPY utility
See copy utility
IEBUPDTE utility
See update utility
IEHIOSUP utility
OPTIONS entry 267
UTILITY entry for 267
IEWBLINK utility
See link-edit utility
IEWL utility
See link-edit utility
IF
MCS statement 43
IFREQ
SYSMOD entry
distribution zone 293
target zone 293
IMASPZAP utility
See superzap utility
INFILE
defining 125
inline elements 16, 34, 54, 66, 79, 94
inline JCLIN
packaging 47
INSTALLDATE
SYSMOD entry
distribution zone 294
target zone 294
INSTALLTIME
SYSMOD entry
distribution zone 294
target zone 294
internal HOLDDATA 37, 88, 219
INVOKE control statement
for GIMIAP 445
IOGEN reason ID 40, 87, 461
IOSUP
OPTIONS entry 267
IPL reason ID 40, 87, 461

J

JCLIN
GIMOPCDE member for assembler OPCODEs in SMPPARM 121
GIMOPCDE members
summary 121
syntax 122
packaged inline 47
SYSMOD entry
distribution zone 294
global zone 306
target zone 294

K

KEEP
  DDDEF entry 177
keyboard 465

L

language abbreviations used on MCS for data elements 12
LANGUAGE option
  of GIMCPTS 414
  of GIMUNZIP 418
  of GIMZIP 430
LANGUAGE parameter, EXEC statement for GIMSMP 411
LASTSUP
  SYSMOD entry
    distribution zone 294
    target zone 294
LASTUPD
  ASSEM entry 163
  data element entry 171
  DLIB entry 191
  hierarchical file system element entry 210
  LMOD entry 223
  MAC entry 241
  MOD entry 249
  PROGRAM entry 278
  SRC entry 283
  SYSMOD entry
    distribution zone 294
    target zone 294
LASTUPDTYPE
  ASSEM entry 163
  data element entry 172
  DLIB entry 192
  hierarchical file system element entry 210
  LMOD entry 223
  MAC entry 241
  MOD entry 250
  PROGRAM entry 278
  SRC entry 284
  SYSMOD entry
    distribution zone 294
    target zone 294
LC_ALL variable
  used for shell scripts 382
LEPARM
  ++MOD MCS operand 63
  example of use 67
library change file records
  file records 387
  record types 387
  SMPDATA1 data set for 128
  SMPDATA2 data set for 129
  spill processing for 129
LINK
  hierarchical file system element MCS operand 30
LINK command
  hierarchical file system element entry 210
link-edit utility
  default values 268, 318, 320, 456
  effect of LEPARM 67
  OPTIONS entry 267
  specifying on JCLIN 46
  UTILITY entry for 267, 318
LIST
  INVOKE control statement operand 446
  UTILITY entry 319
LKED
  ++JCLIN MCS operand 46
  OPTIONS entry 267
  UTILITY entry for 318
LKED ATTRIBUTES
  LMOD entry 223
  MOD entry 250
LKED CONTROL
  LMOD entry 227
LKLIB
  ++MOD MCS operand 64
  ++PROGRAM MCS operand 78
  defining 126
LLA
  effect on ++ZAP processing 111
LMOD
  ++MOD MCS operand 65
  ++MOVE MCS operand 70
  MOD entry 253
LMOD entry
  listing 229
  subentries
    CALLLIBS 222
    COPY 222
    LASTUPD 223
    LASTUPDTYPE 223
    LKED ATTRIBUTES 223
    LKED CONTROL 227
    MODDEL 227
    RC 227
    SIDEDECKLIB 228
    SYSLIB 228
    UTIN 228
    XZMOD 228
    XZMODP 229
  summary 222
  UCLIN for 236
  unloading 233
load modules
  aliases for 65
  deleting 17
  moving 70
  renaming 90
  updating 111
loading system utility programs 455
local shared resources (LSR) 128, 150
LSTTZN option
  of GIMXTRX 425

M

MAC
- ++MOVE MCS operand 70
- MCS statement 50
- OPCODE statement 122
- SYSMOD entry
  - distribution zone 294
  - global zone 306
  - target zone 294

MAC entry
- ++MAC MCS 50
- listing 242
- subentries
  - DISTLIB 240
  - FMID 240
  - GENASM 240
  - LASTUPD 241
  - LASTUPDTYPE 241
  - MALIAS 241
  - RMID 241
  - SYSLIB 241
  - UCL syntax 240
  - UMID 241
- summary 240
- UCLIN for 244
- unloading 243

macros
- ++MAC MCS 51
- ++MACUPD MCS 57
- adding 50
- defining 50
- deleting
  - ++MAC MCS 51
- MCS statement 51, 57
- moving 70
- renaming 56, 90
- replacing
  - ++MAC MCS 50
- updating
  - ++MACUPD MCS 57

MACUPD
- MCS statement 57
- SYSMOD entry
  - distribution zone 294
  - global zone 307
  - target zone 294

MALIAS
- ++MAC MCS operand 52
- ++MACUPD MCS operand 58
- MAC entry 241

master CSI
- specified on EXEC statement 411
- use 127

MAXBLK
- LMOD entry 225
- MOD entry 251

MCS entry
- listing 246
- subentries 246
- summary 246

MCS statements
- ++APAR 6
- ++ASSIGN 8
- ++DELETE 17
- ++FEATURE 21
- ++FUNCTION 23
- ++HOLD 37
- ++IF 43
- ++JCLIN 45
- ++MAC 50
- ++MACUPD 57
- ++MOD 61
- ++MOVE 70
- ++NULL 73
- ++PRODUCT 74
- ++PROGRAM 77
- ++PTF 82
- ++RELEASE 85
- ++RENAME 90
- ++SRC 92
- ++SRCUPD 97
- ++USERMOD 100
- ++VER 103
- ++ZAP 109
- data element 10
- general syntax rules 2
- hierarchical file system 26
- overview 5

MGMTCLAS
- DDDEF entry 180

MOD
- ++MOVE MCS operand 70
- DDDEF entry 180
- MCS statement 61
- SYSMOD entry
  - distribution zone 295
  - global zone 307
  - target zone 295

MOD entry
- ++MOD MCS 61
- listing 254
- subentries
  - ASSEMBLE 248
  - CSECT 248
  - DALIAS 249
  - DISTLIB 249
  - FMID 249
  - LASTUPD 249
  - LASTUPDTYPE 250
  - LKED ATTRIBUTES 250
  - LMOD 253
  - RMID 253
  - RMIDASM 253
  - TALIAS 253
  - UMID 253
  - XZLMOD 253
  - XZLMODP 254
- summary 248
- UCLIN for 260
- unloading 258

MODDEL
LMOD entry 227
modules
++MOD MCS 61
++ZAP MCS 109
adding 61
adding to an existing load module 66
defining 61
deleting 69
++MOD MCS 62
moving 70
renaming 68, 90
replacing
++MOD MCS 61
++PROGRAM MCS 77
updating
++ZAP MCS 109
moving elements
++MOVE MCS 70
moving load modules
++MOVE MCS 70
MSGSKEL reason ID 41, 87, 461
MTSMAC entry
saving through the OPTIONS entry 270
subentries 263
summary 263
UCLIN for 263

N

name
++DELETE MCS operand 18
++FEATURE MCS operand 21
++MAC MCS operand 52
++MACUPD MCS operand 58
++MOD MCS operand 65
++MOVE MCS operand 71
++PROGRAM MCS operand 79
++SRC MCS operand 93
++SRCUPD MCS operand 97
++ZAP MCS operand 109
data element MCS operand 15
FEATURE entry 199
hierarchical file system element MCS operand 30
NAME
UTILITY entry 319
naming conventions
CLASS 462
HOLD reason IDs 460
reason IDs 460
SOURCEIDs 462
summary 459
SYSMOD IDs
APARs 464
function 463
PTFs 464
summary 463
USERMODs 464
zones 195, 314
national language identifiers used on MCS for data elements 12
NCAL
effect of CALLLIBS subentry on 318
LMOD entry 225
NE
LMOD entry 225
MOD entry 251
negative prerequisite SYSMODs
defining with the NPRE operand 104
NEW
DDDEF entry 180
NLS (national language support)
language abbreviations used on MCS for data elements 12
NOCALL
LMOD entry 225
MOD entry 251
NOPURGE
default value 268
OPTIONSentry 268
NOREJECT
default value 268
OPTIONS entry 268
notices 467
NPRE
++VER MCS operand 104
SYSMOD entry
distribution zone 295
global zone 307
target zone 295
NULL
MCS statement 73
NULLFILE used for dummy data sets
not allowed for SMPPTS 138
not allowed for SMPPTS spill data sets 139

O

OGET
creating ++HFS MCS with 34
OL
LMOD entry 226
MOD entry 251
OLD
DDDEF entry 180
OPCODE 137
++JCLIN MCS operand 46
defined in SMPPARM 121
JCLIN OPCODEs
overview 121
member for assembler OPCODEs in SMPPARM 121
OPCODE statement 122
syntax 122
OPTIONS
DLIBZONE entry 195
GLOBALZONE entry 204
TARGETZONE entry 314
Options entry
subentries
MSGWIDTH 268

OPTIONS entry
defining default
distribution zone 195
global zone 204
target zone 314
listing 271
subentries
AMS 265
ASM 265
COMP 266
COMPACT 266
COPY 266
DSPREFIX 266
DSSPACE 266
EXRTYDD 267
HFSCOPY 267
IOSUP 267
LKED 267
MSGFILTER 268
NOPURGE 268
NOREJECT 268
PAGELEN 268
PEMAX 269
RETRY 269
RETRYDDN 270
SAVEMTS 270
SAVESTS 270
SUPPHOLD 270
UPDATE 270
ZAP 271
summary 265
UCLIN for 272
organization of SMP/E data sets 151
OS21 element entry
UCLIN for 216
OS390Rn SOURCEID 463
OUTFILE
defining 126
OVLY
LMOD entry 226
MOD entry 251

P

package attribute file
control tags 434
definition of 434
displaying 438
example of 437
GIMPAF.XML 434
packaging SYSMODs
indirect libraries
LKLIB 64
TXLIB 34, 47, 53, 66, 94
LKLIB 64
relative files (RELFILEs)
FILES operand on ++APAR 6, 23
FILES operand on ++FUNCTION 23
FILES operand on ++MAC 53
FILES operand on ++PTF 82
FILES operand on ++USERMOD 100
packaging SYSMODs *(continued)*
relative files (RELFILEs) *(continued)*
FILES operand on hierarchical file system element MCS 31
reference material 23
RELFILE operand on ++JCLIN 46, 47
RELFILE operand on ++MOD 65
RELFILE operand on ++PTF 82
RELFILE operand on ++SRC 93
RFDSNPFX operand on ++APAR 7
RFDSNPFX operand on ++FUNCTION 24
RFDSNPFX operand on ++PTF 83
RFDSNPFX operand on ++USERMOD 101
TXLIB 34, 47, 53, 66, 94
PAGELEN
default value 269
OPTIONS entry 268
PARM
hierarchical file system element entry 210
hierarchical file system element MCS operand 31
UTILITY entry 319
PATH
DDDEF entry 180
pathname, DDDEF entry for 180
PATHOPTS operand
for CLIENT 125
for SERVER 127
for SMPCNTL 127
for SMPDEBUG 130
for SMPHOLD 131
for SMPJCLIN 131
for SMPLIST 132
for SMPOUT 136
for SMPPTFIN 137
for SMPPUNCH 140
for SMPRPT 140
for SYSIN 147
pax command
use by GIMUNZIP 421
use by GIMZIP 439
PDSE
specification in DDDEF entry 179
PE class value 38, 462
PEMAX
default value 269
OPTIONS entry 269
performance
local shared resources (LSR) feature of VSAM 128, 150
PKGDEF
tag syntax 435
PL/I
data structures in 365
sample GIMAPI program 369
PRE
++VER MCS operand 104
SYSMOD entry
distribution zone 295
global zone 307
target zone 295

pre-built program object
  ++HFS MCS for 34
pre-defined load module
  ++PROGRAM MCS 77
  adding 77
  defining 77
PREFIX
  ++MAC MCS operand 52
  ++MACUPD MCS operand 58
prefix for relative file data sets
  See RFDSNPFX
prerequisite SYSMODs
  ++IF MCS 43
  defining 104
PRINT
  INVOKE control statement operand 446
  UTILITY entry 321
PROCESS parameter, EXEC statement for GIMSMP 412
prodid
  ++PRODUCT MCS operand 74
  PRODUCT entry 275
PRODSUP
  ++PRODUCT MCS operand 75
  PRODUCT entry 275
PRODUCT
  ++FEATURE MCS operand 21
  FEATURE entry 199
PRODUCT entry
  listing 276
  subentries
    DESCRIPTION 275
    prodid 275
    PRODSUP 275
    RECDATE 275
    RECTIME 275
    REWORK 276
    SRL 275
    UCLDATE 275
    UCLTIME 276
    URL 275
    VENDOR 275
  summary 275
  UCLIN for 277
product release specified in FMID 464
PROGRAM
  MCS statement 77
  SYSMOD entry
    distribution zone 295
    global zone 307
    target zone 295
program element
  ++PROGRAM MCS 77
  adding 77
  defining 77
program element entry
  ++PROGRAM MCS 77
program element MCS
  examples 80
program elements
  listing 279
program elements *(continued)*
  unloading 280
PROGRAM entry
  listing 279
  subentries 278
  summary 278
  UCLIN for 281
  unloading 280
PROTECT
  DDDEF entry 181
PTF
  defining 82
  MCS statement 82
  naming conventions 464
  SYSMOD entry
    distribution zone 295
    global zone 307
    target zone 295
PUTyymm
  SOURCEID
    naming conventions 462

Q

QUERY command
  data structures for 329
  example of 327
  of GIMAPI 327
  parameters of 327

R

RC
  INVOKE control statement operand 446
  LMOD entry 227
  UTILITY entry 321
README data sets 439
REASON
  ++HOLD MCS operand 39
  ++RELEASE MCS operand 86
reason IDs
  naming conventions 460
RECDATE
  FEATURE entry 199
  PRODUCT entry 275
  SYSMOD entry
    distribution zone 295
    global zone 307
    target zone 295
RECEIVE exit routine 407
Recommended Service Upgrade 462
RECTIME
  FEATURE entry 199
  PRODUCT entry 275
  SYSMOD entry
    distribution zone 295
    global zone 307
    target zone 295
REFR
  LMOD entry 226
  MOD entry 251

REGEN
SYSMOD entry
distribution zone 295
target zone 295
RELATED
DLIBZONE entry 195
TARGETZONE entry 314
related zone
defining
for a distribution zone 195
for a target zone 314
summary 155
relative files (RELFILEs)
prefix for
See RFDSNPFX
release
specified in FMID 464
releasing a held SYSMOD
++RELEASE MCS 85
RELFILE
++JCLIN MCS operand 46
++MAC MCS operand 53
++MOD MCS operand 65
++PROGRAM MCS operand 79
++SRC MCS operand 93
data element MCS operand 15
hierarchical file system element MCS operand 31
renaming elements 90
data elements, MCS for 16
hierarchical file system elements, MCS for 35
macros, MCS for 56
modules, MCS for 68
source, MCS for 95
renaming load modules
++RENAME MCS 90
RENLMOD
SYSMOD entry
distribution zone 296, 307
target zone 296, 307
RENT
LMOD entry 226
MOD entry 252
REPLACE
INVOKE control statement operand 446
REQ
++IF MCS operand 43
++VER MCS operand 104
SYSMOD entry
distribution zone 296
global zone 307
target zone 296
RESDATE
SYSMOD entry
target zone 296
RESTART reason ID 41, 87, 462
RESTIME
SYSMOD entry
target zone 296
RESTORE
SYSMOD entry
target zone 296
restricting system utility programs 455
restrictions
dummy volumes for SMPTLIB data sets 142
retry
exit routine 409
RETRY
excluding data sets 267
including data sets 270
OPTIONS entry 269
UTILITY entry for 318
retry utility
default values 270, 318
defaults 270, 318, 456
OPTIONS entry 269
UTILITY entry for 269, 318
RETRYDDN
OPTIONS entry 270
return codes
for GIMIAP 449
utilities
maximum acceptable value, specifying 321
summary 321
REUS
LMOD entry 226
MOD entry 252
REUS(NONE)
LMOD entry 226
MOD entry 252
REWORK
++APAR MCS operand 7
++FEATURE MCS operand 22
++FUNCTION MCS operand 24
++PRODUCT MCS operand 76
++PTF MCS operand 83
++USERMOD MCS operand 101
FEATURE entry 199
PRODUCT entry 276
SYSMOD entry
distribution zone 296
global zone 307
target zone 296
RFDSNPFX
++APAR MCS operand 7
++FUNCTION MCS operand 24
++PTF MCS operand 83
++USERMOD MCS operand 101
conflict with DSPREFIX value 266
RLMOD
SYSMOD entry
distribution zone 297, 307
target zone 297, 307
RMID
++MAC MCS operand 53
++MOD MCS operand 65
++PROGRAM MCS operand 79
++SRC MCS operand 94
data element entry 172
data element MCS operand 15
hierarchical file system element entry 211
hierarchical file system element MCS operand 31
MAC entry 241

RMID *(continued)*
MOD entry 253
PROGRAM entry 279
SRC entry 284
RMIDASM
MOD entry 253
RMODE=24
LMOD entry 226
MOD entry 252
RMODE=ANY
LMOD entry 226
MOD entry 252
RMODE=SPLIT
LMOD entry 226
MOD entry 252

S

sample GIMAPI program 369
SAVEMTS
default value 270
OPTIONS entry 270
SAVESTS
default value 270
OPTIONS entry 270
SCTR
LMOD entry 226
MOD entry 252
SELECT control statement
for GIMIAP 447
SERVER, defining 127
service routines 413
GIMDTS 415
GIMUNZIP 417
GIMXTRX 422
GIMZIP 429
SETSSI statement
++ZAP input 110
shell scripts for SMP/E
description 381
example 383
returning control from 383
ShopzSeries
GIMXTRX service routine 422
shortcut keys 465
SHR
DDDEF entry 180
SHSCRIPT
hierarchical file system element entry 211
hierarchical file system element MCS operand 31
SELECT control statement operand 447
SIDEDECKLIB
LMOD entry 228
SMCCOR SOURCEID
naming conventions 463
SMCREC SOURCEID
naming conventions 463
SMODTYPE
additional subentry type for GIMAPI 335
value for superseded only SYSMODs 347, 350
SMP_Action variable
used for shell scripts 382
SMP_Directory variable
used for shell scripts 381
SMP_File variable
used for shell scripts 381
SMP_Phase variable
used for shell scripts 382
SMP/E data set entries 151
SMP/E data sets, descriptions of 125
SMP/E MCS statements 5
SMP/E service routines 413
SMPCNTL, defining 127
SMPCSI
hierarchical file system element entry
distribution zone 209
target zone 209
MAC entry
distribution zone 240
target zone 240
MOD entry
distribution zone 248
target zone 248
OPTIONS entry 265
SRC entry
distribution zone 283
target zone 283
SYSMOD entry
distribution zone 291
global zone 304
target zone 291
TARGETZONE entry 314
UTILITY entry 318
ZONESET entry 325
SMPDATA1
defining 128
SMPDATA2
defining 129
SMPDEBUG
defining 130
SMPDIR option
of GIMUNZIP 418
SMPDIR, defining 130
SMPHOLD
defining 131
SMPJCLIN
defining 131
SMPLIST
defining 131
SMPLOG
defining 132
SMPLOGA
defining 132
SMPLTS
defining 133
SMPMTS
ACCEPT processing 263
APPLY processing 263
defining 134
MTSMAC entry 263

SMPMTS *(continued)*
saving MTSMAC entries after ACCEPT processing (SAVEMTS) 270
SMPnnnnn
defining 146
SMPNTS
defining 135
SMPOBJ
defining 135
SMPOUT
defining 136
SMPOUT option
of GIMUNZIP 418
SMPPARM
defining 136
members of 113
syntax rules 2
SMPPTFIN
defining 137
SMPPTS
compacting 413
defining 138
expanding 413
MCS entry 246
saving MCS entries after ACCEPT processing (NOPURGE) 268
saving MCS entries after RESTORE processing (NOREJECT) 268
SMPPTS spill
defining 138
SMPPUNCH
defining 139
SMPRPT
defining 140
SMPSCDS
BACKUP entries 168
defining 140
SMPSNAP
defining 141
SMPSTS
ACCEPT processing 289
APPLY processing 289
defining 141
saving STSSRC entries after ACCEPT processing (SAVESTS) 270
STSSRC entry 289
SMPTLIB
ACCEPT processing 268
conflict between DSPREFIX value and RFDSNPFX value 266
defaults
disposition 142
space 267
defining 141
DSPREFIX value for data set name
DDDEF entry 179
OPTIONS entry 266
DSSPACE value for 266
saving after ACCEPT processing (NOPURGE) 268
SMPTLOAD
defining 143
SMPWRK1
defining 144
SMPWRK2
defining 144
SMPWRK3
defining 145
SMPWRK4
defining 146
SMPWRK6
defining 146
SMS
DATACLAS specification in DDDEF entry 178
MGMTCLAS specification in DDDEF entry 180
PDSE (LIBRARY) specification in DDDEF entry 179
STORCLAS specification in DDDEF entry 181
UNIT specification not needed in DDDEF entry 182
VOLUME specification not needed in DDDEF entry 182
source
++SRC MCS 92
++SRCUPD MCS 97
adding 92, 95
defining 92
deleting
++SRC MCS 92
moving 70
renaming 90, 95
replacing
++SRC MCS 92
updating
++SRCUPD MCS 97
SOURCEID
++ASSIGN MCS operand 8
assigning 8
naming conventions 462
OS390Rn 463
PUTyymm 462
RSUyymm 462
SMCCOR 463
SMCREC 463
SYSMOD entry
distribution zone 297
global zone 308
target zone 297
YR2000 463
SPACE
DDDEF entry 181
specifying which utilities SMP/E can call 455
SRC
++MOVE MCS operand 70
MCS statement 92
SYSMOD entry
distribution zone 297
global zone 308
target zone 297
SRC entry
++SRC MCS 92
listing 284
subentries
DISTLIB 283
FMID 283

SRC entry *(continued)*
subentries *(continued)*
LASTUPD 283
LASTUPDTYPE 284
RMID 284
SYSLIB 284
UMID 284
summary 283
UCLIN for 287
unloading 286
SRCUPD
MCS statement 97
SYSMOD entry
distribution zone 297
global zone 308
target zone 297
SREL
++PRODUCT MCS operand 75
++VER MCS operand 104
DLIBZONE entry 196
GLOBALZONE entry 204
SYSMOD entry
global zone 308
TARGETZONE entry 314
SRL
PRODUCT entry 275
SSI
++MAC MCS operand 53
++SRC MCS operand 94
STD
LMOD entry 226
MOD entry 252
STORCLAS
DDDEF entry 181
STORENX parameter 320
STSSRC entry
saving through the OPTIONS entry 270
subentries 289
summary 289
UCLIN for 289
subentry types valid for QUERY command 334
SUP
++VER MCS operand 105
SUPBY
SYSMOD entry
distribution zone 297
target zone 297
superseded SYSMODs
defining 105
superzap utility
default values 271, 318, 456
examples 111
OPTIONS entry 271
UTILITY entry for 271, 318
SUPING
SYSMOD entry
distribution zone 297
global zone 308
target zone 297
SUPPHOLD
default value 270
SUPPHOLD *(continued)*
OPTIONS entry 270
SYMLINK
hierarchical file system element entry 211
hierarchical file system element MCS operand 32
SYMPATH
hierarchical file system element entry 212
hierarchical file system element MCS operand 32
syntax of SMP/E control statements
how to read 1
rules for coding
MCS statements 2
OPCODE members 2
SMPPARM members 2
XML statements 4
syntax rules 2, 4
SYSALLDA
restriction for SMPTLIB data sets 142
SYSIN
defining 147
SYSIN data set 147
SYSIN option
of GIMUNZIP 418
SYSLIB
++DELETE MCS operand 18
++MAC MCS operand 53
++MACUPD MCS operand 58
++MOVE MCS operand 71
++PROGRAM MCS operand 79
++SRC MCS operand 94
++SRCUPD MCS operand 97
copied from DLIB entry 191
data element entry 172
data element MCS operand 15
defining 147
DLIB entry 192
hierarchical file system element entry 212
hierarchical file system element MCS operand 33
LMOD entry 228
MAC entry 241
PROGRAM entry 279
SRC entry 284
SYSMOD entry
distribution zone
summary 291
global zone
saving after ACCEPT processing (NOPURGE) 268
saving after RESTORE (NOREJECT) 268
summary 304
listing 298, 309
subentries
ACCDATE 294
ACCEPT 291
ACCID 304
ACCTIME 294
APAR 291, 304
APPDATE 294
APPID 304
APPLY 291
APPTIME 294

SYSMOD entry *(continued)*
subentries *(continued)*
ASSEM 291
BYPASS 292
CIFREQ 292
DELBY 292
DELETE 292, 305
DELLMOD 292, 305
DESCRIPTION 292, 305
DLMOD 292, 305
DSPREFIX 308
ELEMMOV 293, 305
EMOVE 293, 305
ERROR 293, 305
FEATURE 293, 305
FESN 293, 305
FMID 293, 305
FUNCTION 293, 306
hierarchical file system elements 293, 306
HOLDERROR 306
HOLDSYSTEM 306
HOLDUSER 306
IFREQ 293
INSTALLDATE 294
INSTALLTIME 294
JCLIN 294, 306
LASTSUP 294
LASTUPD 294
LASTUPDTYPE 294
MAC 294, 306
MACUPD 294, 307
MOD 295, 307
NPRE 295, 307
PRE 295, 307
PROGRAM 295, 307
PTF 295, 307
RECDATE 295, 307
RECTIME 295, 307
REGEN 295
RENLMOD 296, 307
REQ 296, 307
RESTIME 296
RESTORE 296
REWORK 296, 307
RLMOD 297, 307
SOURCEID 297, 308
SRC 297, 308
SRCUPD 297, 308
SREL 308
SUPBY 297
SUPING 297, 308
SZAP 297, 308
UCL syntax 291, 304
UCLDATE 297
UCLTIME 298
USERMOD 298, 309
VERNUM 298
VERSION 298, 309
XZAP 298, 309
summary 291, 304
SYSMOD entry *(continued)*
target zone
summary 291
UCLIN for
distribution zone 302
global zone 312
target zone 302
unloading 301
SYSMOD ID
++APAR MCS operand 7
++FUNCTION MCS operand 24
++HOLD MCS operand 41
++PTF MCS operand 83
++RELEASE MCS operand 87
++USERMOD MCS operand 101
naming conventions 463
SYSOUT
DDDEF entry 181
SYSPRINT
defining 147
specified in UTILITY entry 321
SYSPRINT option
of GIMUNZIP 419
SYSPUNCH
defining 148
SYSTEM
See also SYSMOD ID
++HOLD MCS operand 39
++RELEASE MCS operand 85
reason IDs 39, 86, 460
system generation
indicated by REGEN subentry 296
system reason IDs
naming conventions 460
values
ACTION 40, 86, 460
AO 40, 86, 461
DB2BIND 40, 86, 461
DELETE 40, 86, 461
DEP 40, 86, 461
DOC 40, 86, 461
EC 40, 86, 461
ENH 40, 86, 461
EXIT 40, 87, 461
EXRF 40, 87, 461
FULLGEN 40, 87, 461
IOGEN 40, 87, 461
IPL 40, 87, 461
MSGSKEL 41, 87, 461
RESTART 41, 87, 462
SYSTSPRT
specified in UTILITY entry 321
used by GIMXTRX 423
SYSUT1
defining 148
SYSUT3 option
of GIMUNZIP 418
SYSUT4
defining 149
SYSUT4 option
of GIMUNZIP 418

SZAP
SYSMOD entry
distribution zone 297
global zone 308
target zone 297

T

TALIAS
++MOD MCS operand 65
++ZAP MCS operand 109
MOD entry 253
target libraries
defining 149
target zone
ASSEM entry 163
cross-zone, automatic updating 315
cross-zone, information added by LINK command 315
data element entry 171
DDDEF entry 177
DLIB entry 191
hierarchical file system element entry 209
LMOD entry 222
MAC entry 240
MOD entry 248
PROGRAM entry 278
SRC entry 283
SYSMOD entry 291
TARGETZONE entry 314
zone description provided by user 315
TARGETZONE entry
listing 316
subentries
name 314
OPTIONS 314
RELATED 314
SREL 314
TIEDTO 315
XZLINK 315
ZONEDESCRIPTION 315
summary 314
UCLIN for 316
TEXT
hierarchical file system element entry 209
hierarchical file system element MCS operand 33
TIEDTO
TARGETZONE entry 315
TLIBPREFIX
SYSMOD entry
global zone 308
TODISTLIB
++MOVE MCS operand 71
TOLIB
COPY control statement operand 447
TONAME
++RENAME MCS operand 90
TOSYSLIB
++MOVE MCS operand 71
totally copied library
JCLIN processing 191
TRACKS
DDDEF entry 177
TXLIB
++JCLIN MCS operand 47
++MAC MCS operand 53
++MOD MCS operand 66
++SRC MCS operand 94
data element MCS operand 15
defining 150
hierarchical file system element MCS operand 34
TYPE operand
OPCODE statement 122

U

UCL syntax
ASSEM entry 163
data element entry 171
DDDEF entry
distribution zone 177
target zone 177
DLIB entry 191
DLIBZONE entry 195
FMIDSET entry 201
GLOBALZONE entry 204
hierarchical file system element entry
summary 209
LMOD entry
summary 222
MAC entry
summary 240
MOD entry
summary 248
OPTIONS entry 265
PROGRAM entry 278
SRC entry
summary 283
SYSMOD entry
distribution zone 291
global zone 304
target zone 291
TARGETZONE entry 314
UTILITY entry
summary 319
ZONESET entry 325
UCLDATE
FEATURE entry 199
PRODUCT entry 275
SYSMOD entry
distribution zone 297
target zone 297
UCLIN class value 38, 462
UCLTIME
FEATURE entry 199
PRODUCT entry 276
SYSMOD entry
distribution zone 298
target zone 298
UMID
++MAC MCS operand 53
++MOD MCS operand 66

UMID *(continued)*
++SRC MCS operand 94
MAC entry 241
MOD entry 253
SRC entry 284
uniform resource locator (URL)
in ++PRODUCT MCS 75
UNIT
DDDEF entry 182
UPCASE
LMOD entry 227
MOD entry 252
UPDATE
++JCLIN MCS operand 47
OPTIONS entry 270
UTILITY entry for 318
update utility
default values 270, 318, 456
OPTIONS entry 270
restrictions 321
specifying on JCLIN 47
UTILITY entry for 270, 318
URL
++PRODUCT MCS operand 75
PRODUCT entry 275
usage recommendations
library change file records 404
USER
See also user reason IDs
++HOLD MCS operand 39
++RELEASE MCS operand 85
reason IDs 41, 87, 462
user modification
See USERMOD
user reason IDs
naming conventions 462
USERMOD
defining 100
naming conventions 464
source update example 98
SYSMOD entry
distribution zone 298
global zone 309
target zone 298
UTILITY entry
listing 322
subentries
LIST 319
NAME 319
PARM 319
PRINT 321
RC 321
summary 319
summary 318
UCLIN for 323
utility programs
default programs
access method services (IDCAMS) 456
assembler (ASMA90) 456
compress (IEBCOPY) 456
copy (IEBCOPY) 456
utility programs *(continued)*
default programs *(continued)*
hierarchical file system copy (BPXCOPY) 456
link-edit utility (IEWBLINK) 456
link-edit utility (IEWL) 456
retry (IEBCOPY) 456
superzap (IMASPZAP) 456
update (IEBUPDTE) 456
default values
access method services (AMS) 265, 318
assembler 265, 318
compress 266, 318
copy 266, 318
HFS copy 267
hierarchical file system copy 318
link-edit utility 267, 318
retry 269, 318
superzap 271, 318
update 270, 318
loading 455
OPTIONS entry pointer to
access method services 265
assembler 265
compress 266
copy 266
hierarchical file system copy 267
IEHIOSUP utility 267
link-edit utility 267
retry 269
superzap 271
update 270
parameters passed to 318, 319
restricting through GIMUTTBL 455
return codes for
default values 318
threshold 321
SYSPRINT output 318, 321
UTILITY entries for 318
UTIN
LMOD entry 228

V

variable block library
installing CLIST data element in 10
VENDOR
++PRODUCT MCS operand 75
PRODUCT entry 275
VER
MCS statement 103
VERNUM
SYSMOD entry
distribution zone 298
target zone 298
VERSION
++MAC MCS operand 53
++MOD MCS operand 66
++PROGRAM MCS operand 79
++SRC MCS operand 94
++VER MCS operand 105
data element MCS operand 16

VERSION *(continued)*
hierarchical file system element MCS operand 34
SYSMOD entry
distribution zone 298
global zone 309
target zone 298
VERSION command
of GIMAPI 360
VLF
effect on ++ZAP processing 111
VOLUME
DDDEF entry 182
vv.rr.mm
PRODUCT entry 275

W

WAIT
DDDEF entry 182
EXEC statement parameter for GIMSMP 412
WAITFORDSN
DDDEF entry 182

X

XML statements
general syntax rules 4
XREF
sample LIST output
ASSEM entry 164
data element entry 173
hierarchical file system element entry 214
LMOD entry 231
MAC entry 242
MOD entry 256
PROGRAM entry 280
SRC entry 285
SYSMOD entry 301
XSL (extensible stylesheet language) file
browser for 438
definition of 434
XZAP
SYSMOD entry
distribution zone 298
global zone 309
target zone 298
XZLINK
TARGETZONE entry 315
XZLMOD
MOD entry 253
XZLMODP
MOD entry 254
XZMOD
LMOD entry 228
XZMODP
LMOD entry 229
XZREQCHK
ZONESET entry 325

Y

YR2000 class value 38, 462
YR2000 SOURCEID
naming conventions 463

Z

z/OS SecureWay Security Server protection for data sets 181
ZAP
MCS statement 109
OPTIONS entry 271
UTILITY entry for 318
ZONE
ZONESET entry 325
ZONEDESCRIPTION
DLIBZONE entry 196
GLOBALZONE entry 204
TARGETZONE entry 315
ZONEINDEX
GLOBALZONE entry 205
zones
defining 150
naming conventions 195, 314
ZONESET entry
listing 325
subentries
XZREQCHK 325
ZONE 325
summary 325
UCLIN for 326

Readers' Comments — We'd Like to Hear from You

SMP/E for z/OS and OS/390
Reference

Publication No. SA22-7772-02

Overall, how satisfied are you with the information in this book?

	Very Satisfied	Satisfied	Neutral	Dissatisfied	Very Dissatisfied
Overall satisfaction	☐	☐	☐	☐	☐

How satisfied are you that the information in this book is:

	Very Satisfied	Satisfied	Neutral	Dissatisfied	Very Dissatisfied
Accurate	☐	☐	☐	☐	☐
Complete	☐	☐	☐	☐	☐
Easy to find	☐	☐	☐	☐	☐
Easy to understand	☐	☐	☐	☐	☐
Well organized	☐	☐	☐	☐	☐
Applicable to your tasks	☐	☐	☐	☐	☐

Please tell us how we can improve this book:

Thank you for your responses. May we contact you? ☐ Yes ☐ No

When you send comments to IBM, you grant IBM a nonexclusive right to use or distribute your comments in any way it believes appropriate without incurring any obligation to you.

Name _____ Address _____

Company or Organization _____

Phone No. _____

Readers' Comments — We'd Like to Hear from You
SA22-7772-02

IBM

Cut or Fold
Along Line

Fold and Tape | **Please do not staple** | Fold and Tape

NO POSTAGE
NECESSARY
IF MAILED IN THE
UNITED STATES

BUSINESS REPLY MAIL

FIRST-CLASS MAIL PERMIT NO. 40 ARMONK, NEW YORK

POSTAGE WILL BE PAID BY ADDRESSEE

IBM Corporation
Department 55JA, Mail Station P384
2455 South Road
Poughkeepsie, NY
12601-5400

Fold and Tape | **Please do not staple** | Fold and Tape

SA22-7772-02

Cut or Fold
Along Line

Program Number: 5655-G44

Printed in the United States of America
on recycled paper containing 10%
recovered post-consumer fiber.

SA22-7772-02