z/OS

Language Environment Vendor Interfaces

SA22-7568-03

z/OS

Language Environment Vendor Interfaces

SA22-7568-03

Note

Before using this information and the product it supports, be sure to read the general information under “Notices” on page 671.

Fourth Edition, September 2002

This edition applies to Language Environment® in Version 1, Release 4 of z/OS™ (5694-A01), Version 1, Release 4 of z/OS.e™ (5655-G52), and to all subsequent releases and modifications until otherwise indicated in new editions.

This is a major revision of SA22-7568-02.

Order documents through your IBM® representative or the IBM branch office serving your locality. Documents are not stocked at the address below.

IBM welcomes your comments. A form for readers’ comments may be provided at the back of this document, or you may address your comments to the following address:

International Business Machines Corporation
Department 55JA, Mail Station P384
2455 South Road
Poughkeepsie, NY 12601-5400
United States of America

FAX (United States & Canada): 1+845+432-9405
FAX (Other Countries):
Your International Access Code +1+845+432-9405

IBMLink™ (United States customers only): IBMUSM10(MHVRCFS)
Internet e-mail: mhvrcfs@us.ibm.com
World Wide Web: http://www.ibm.com/servers/eserver/zseries/zos/webqs.html

If you would like a reply, be sure to include your name, address, telephone number, or FAX number.

Make sure to include the following in your comment or note:
- Title and order number of this document
- Page number or topic related to your comment

When you send information to IBM, you grant IBM a nonexclusive right to use or distribute the information in any way it believes appropriate without incurring any obligation to you.

© Copyright International Business Machines Corporation 1991, 2002. All rights reserved.
US Government Users Restricted Rights – Use, duplication or disclosure restricted by GSA ADP Schedule Contract with IBM Corp.

Contents

Figures vii

Tables xi

About this document xiii
Using your documentation. xiv
How to read syntax diagrams. xv
Where to find more information xvii

Summary of changes xix

Chapter 1. Common Interfaces and Conventions 1
Common Run-Time Environment 1
Language Environment Dynamic Storage Area – Non-XPLINK 29
Language Environment Dynamic Storage Area – XPLINK 31
Language Environment Common Anchor Area 32
Language Environment Enclave Data Block 53
Language Environment Process Control Block 63
Language Environment Region Control Block. 70
Language Environment Member List and Event Handler. 74
Language Environment Callable Services Calling Conventions 76

Chapter 2. CALL Linkage Conventions 81
Terminology 81
Standard CALL Linkage Conventions. 82
FASTLINK CALL Linkage Conventions 92
Extra Performance Linkage (XPLINK) CALL Linkage Conventions. 104

Chapter 3. Program Initialization and Termination 127
Initialization Overview 127
Termination Overview 128
Putting Initialization/Termination Together 129
Member Interfaces for Initialization 129
Member Interfaces for Termination 166
Member Event Codes for Initialization and Termination 169
Language Environment Abend Summary 171
Options Processing Event 174
User Exits 174
Language Environment Interface Validation Exit 175
Interface for Preinitialization. 186

Chapter 4. Storage Management 193
Dynamic Storage (Heap) Services 193
User-Created Heap Services 202
Vendor heap manager interface 205
XPLINK DSA Extension Services. 208
XPLINK Compatibility Stack Swapping Services 210
__stack_info() - Stack segment ranges 213

Chapter 5. Condition Representation 217
Objectives 217
The Model 217
Data Objects 218

© Copyright IBM Corp. 1991, 2002

Compiler-Writer Interfaces 222

Chapter 6. National Language Support and Message Handler 225
National Language Support 225
Introduction to Language Environment Message Services. 226
MSGFILE — Related CWIs 226
Message Handling Services. 231
C/C++-Specific Vendor Interfaces 235

Chapter 7. Condition Management 241
Compiler-Writer Interfaces (CWIs) 241
Other Language Environment Condition Manager Topics 264
HLL Conventions and Information 266
Language Environment-Issued Abends 267

Chapter 8. Program Management 269
Loading and Deleting Programs 269
CWI to Program Management Process Services 270
CWI to Program Management Region Services 271
CWI to Program Management Enclave Services 273
Library Subroutine Access 284
CEEPPOS - Program Object Services 293
CWIs for Explicit DLL Reference 297
CWIs for Implicit DLL Reference 302
CWIs to Find the Writable Static Area (WSA) 312

Chapter 9. Debugging and Performance Analysis 315
Language Environment-Provided CWIs for the Debug Tool 315
CEEQFBC — Query Feedback Code Routine 318
Debug Tool-Provided Event Handlers 323
Language Environment Actions for the Interactive Debug Tool 329
Language Environment Interactive Debug Data Areas 330
Performance Analysis Support. 331

Chapter 10. DFSORT Interface 335
DFSORT Interface Description. 335
CEE3SRT — Call DFSORT. 335
ILC within SORT Exits. 337
Error Handling within SORT Exits 337

Chapter 11. Math Library 339
Calling Math Services from an Application 339
Math Service Condition Handling Requirements 339
Data Types and Their Abbreviations. 340
CWI Conventions for Scalar Math Services 340
Condition Token Values for Math Services 341
Math Services. 342
Message ID — Message Text for Math Library 353
Language Environment Conversion Services 358

Chapter 12. Dump and Tracing Services 371
Dump Services 371
Other Dump-Related CWIs 387
Tracing Services 392

Chapter 13. Subsystem Considerations 397

CICS and POSIX 397
Background Information 397
Language Environment-CICS Interface 402
CEECTCB — Set TCB+X'144' Routine 435
CEECCICS — Partition Initialization Changes 436
IMS Considerations 437

Chapter 14. Anchor Support 439
Anchor Service 439
CEEARLU — Anchor Lookup 440
Anchor Considerations 441
Bypassing Anchor Lookup, Set, or Reset 442

Chapter 15. Member Language Information 443
OS Services — Restricted Use 443
Structure of Executable Programs 443
Central Control Blocks. 444
The Event Handler 444
Event Handler Calls 445

Chapter 16. z/OS UNIX System Services Support. 493
Thread Management Functions 493
Signal Handling CWIs 505
Thread Keyed Data CWIs 507
Thread Cancellation CWIs 511
Thread Synchronization — Mutex and Read-Write Locks 516
Thread Synchronization — Condition Variables 543
Process Control Functions Support 557
Miscellaneous Utilities 565
Support for POSIX Functions getenv(), setenv(), and clearenv() 566

Chapter 17. COBOL-Specific Vendor Interfaces 569
ILBOLLDX — OS/VS COBOL Library Load/Delete Exit. 569
IGZCXCC — COBOL Call/Cancel Routine 571

Chapter 18. C/C++ Special Purpose Interfaces for IEEE Floating-Point 575
IEEE Floating-Point Introduction 575
IEEE Floating-Point Functions 576

Appendix A. Options Control Block and Supplementary Options Control Block 589
Options Control Block 589
Supplementary Options Control Block 643

Appendix B. Condition Information Block 647

Appendix C. Machine State Block. 653

Appendix D. CALL Linkage Argument Examples 657
FASTLINK CALL Linkage Argument Examples 657
XPLINK CALL Linkage Argument Examples 662

Appendix E. Accessibility 669
Using assistive technologies 669
Keyboard navigation of the user interface. 669

Notices 671
Programming Interface Information 673
Trademarks. 673

Bibliography 675
Language Products Publications 675
Related Publications 676
Softcopy Publications 677

Index 679

Figures

1. Layout Entry of Language Environment-Conforming Routines – Standard . . . 4
2. Layout Entry of Language Environment-Conforming Routines – FASTLINK . . . 5
3. Layout Entry of Language Environment-Conforming Routines – XPLINK . . . 5
4. XPLINK Stack Extension Marker . . . 6
5. XPLINK End of Data Marker . . . 7
6. XPLINK Stub Entry Marker . . . 7
7. Layout Entry of C/370-Conforming Routines . . . 8
8. Prolog Constants Format – Level 1 (Standard) . . . 10
9. Prolog Constants Format – Level 2 (FASTLINK) . . . 11
10. Prolog Constants Format – Level 3 (IEEE Floating-Point) . . . 12
11. Compilation Flag bits . . . 13
12. Language Environment PPA1 Offset X'02' . . . 13
13. Language Environment PPA1 Flag 2 Offset X'18' . . . 14
14. Language Environment PPA1 Flag 3 Offset X'1C' . . . 15
15. Language Environment-Enabled Language Member Identifiers . . . 17
16. Prolog Constants Format – Level 4 (XPLINK), PPA1: Entry Point Block (Version 3) . . . 17
17. PPA1: XPLINK Entry Point Block Fixed Area (Version 3) Details . . . 18
18. Language Environment PPA1 Flag 1 Offset X'08' . . . 19
19. Language Environment PPA1 Flag 2 Offset X'09' . . . 20
20. Language Environment PPA1 Flag 3 Offset X'0A' . . . 20
21. Language Environment PPA1 Flag 4 Offset X'0B' . . . 21
22. Language Environment PPA1 Flag Word as defined by C++ . . . 23
23. Prolog Constants Format – Level 4 (XPLINK), PPA2: Compile Unit Block . . . 24
24. Level 4 (XPLINK), PPA2: Compile Unit Block bits . . . 25
25. Timestamp and Version Information . . . 25
26. Language Environment Dynamic Storage Area – Non-XPLINK Format . . . 30
27. Language Environment Dynamic Storage Area – XPLINK Format . . . 31
28. Member List Format. . . . 75
29. Format of an Entry Variable . . . 78
30. CALL Terminology Refresher . . . 81
31. Language Environment Non-XPLINK Stack Storage Model . . . 82
32. DSA Allocation, User Stack . . . 84
33. DSA Extension, User Stack . . . 84
34. Free a DSA Extension Using Saved NAB Value . . . 85
35. DSA Allocation in User Stack when R13 Does Not Address a Language Environment DSA 86
36. DSA Allocation, Library Stack . . . 87
37. DSA Return, Library Stack . . . 88
38. Get Next Available Byte in User Stack . . . 88
39. S/370 Argument/Parameter List Format . . . 91
40. Typical FASTLINK Stack Frame Storage Map . . . 93
41. Argument List Passed on a Procedure Call . . . 95
42. Stack Segment Showing FASTLINK Frames. . . . 97
43. FASTLINK to FASTLINK Linkage Code Sequence, Non-Sleaf Routine . . . 101
44. FASTLINK to FASTLINK Linkage Code Sequence, Sleaf Routine . . . 103
45. Language Environment XPLINK Stack Storage Model. . . . 105
46. Language Environment XPLINK Stack Frame Layout . . . 106
47. XPLINK Function Layout . . . 118
48. Non-XPLINK CEESTART Format . . . 131
49. XPLINK CEESTART Format . . . 134
50. Format of CEEFMAIN . . . 136
51. Format of CEEMAIN . . . 137
52. Signature CSECT Format . . . 139
53. CEEBETBL CSECT Format . . . 140

© Copyright IBM Corp. 1991, 2002

54. CEEBLLST Format 142
55. Format of the Initialization Parameter List 143
56. Updated Format of the Initialization Parameter List 144
57. Run-Time Options Error Table 174
58. CEEAFHX0 Example 185
59. Preinitialization Environment Initialization exceprtn Flow (Task Mode) 191
60. Preinitialization Environment Exception Flow (SRB Mode) 192
61. Condition Token 219
62. Language Environment Condition Token (CEECTOK) 222
63. Access to Message Insert Information 234
64. Format of a non-XPLINK Label Variable 250
65. XPLINK Extended Format Label Variable 250
66. XPLINK Extended Format Label Variable – Resume Area 252
67. Library Subroutine Access Table (LIBVEC) 285
68. Partial LIBPACK CSECT Definition 287
69. LIBVEC Descriptor 288
70. Function Descriptor Control Block (FDCB) Format 306
71. Variable Descriptor Control Block (VDCB) Format 310
72. Load List Layout 316
73. DFSORT's Extended Parameter List 336
74. HLL CWI Parameter List Format 341
75. Condition Token Values for Math Services 342
76. Examples of E-format Output Conversions 361
77. Examples of F-format Output Conversions 365
78. Examples of Input Conversions 367
79. Examples of Input Conversions with Feedback Indicated 369
80. Transferring Control Between Application Program, Member Language Library, and Language Environment 372
81. CEEVDMP Output Format 383
82. CEEHDMP Output Format 385
83. CEEBDMP Output Format 387
84. Example: Calling the CEEKCTRC CWI from the C RTL 395
85. Language Environment-CICS and Language Environment-Batch Program Model 401
86. CICS Call Argument List 405
87. Language Environment-CICS Run Unit Initialization, Invocation, and Termination 406
88. Language Environment-CICS Run Unit Termination 406
89. Structure of Interface Flags Field 408
90. Structure of Information Supplied to CICS by Language Environment for PGMINFO1 413
91. Structure of Information Supplied to CICS by Language Environment for PGMINFO2 415
92. Structure of Information Supplied to CICS by Language Environment for STATUSFLAGS 418
93. Structure of Information Supplied to Language Environment by CICS 420
94. Structure of Standard I/O Information provided to Language Environment by CICS 422
95. Run Information Supplied to Language Environment by CICS 422
96. Termination Information Supplied from CICS to Language Environment 423
97. Structure of Information Supplied to Language Environment by CICS 425
98. Program Termination Block (PTB) Declaration 428
99. Lang Bit Definition for CEECICS (60) 433
100. Lang Bit Definition for CEECICS (70) 435
101. Lang Bit Definition for GOTOFLGS 435
102. IMS Parameter List Format 437
103. Structure of the Language Environment Anchor Vector 439
104. Example of Code to Set and Obtain the Language Environment Anchor 442
105. Condition Qualifying Data Returned by CEEOKILL CWI 507
106. Link Edit Information to Enable ILBOLLDX in ILBONTR 570
107. Link Edit Information to Enable ILBOLLDX in ILBOSRV 571
108. Link Edit Information to Enable ILBOLLDX in ILBOSTT 571

109. Structure for CALL with Name 572
110. Structure for CANCEL with Name 572
111. Condition Information Block 647
112. Condition Information Block Cross Reference 650
113. Machine State Block 653
114. Machine State Block Cross Reference 655

Tables

1. How to Use z/OS Language Environment Publications . . . xiv
2. Syntax examples . . . xvi
3. Common Anchor Area (CAA) Field Descriptions . . . 32
4. Common Anchor Area (CAA) Constants . . . 39
5. Common Anchor Area (CAA) Cross Reference . . . 40
6. Enclave Data Block (EDB) Field Descriptions . . . 53
7. Enclave Data Block (EDB) Constants . . . 57
8. Enclave Data Block (EDB) Cross Reference . . . 58
9. Process Control Block (PCB) Field Descriptions . . . 63
10. Process Control Block (PCB) Constants . . . 65
11. Process Control Block (PCB) Cross Reference . . . 66
12. Region Control Block (RCB) Field Descriptions . . . 70
13. Region Control Block (RCB) Constants. . . . 71
14. Region Control Block (RCB) Cross Reference . . . 72
15. Prolog/Epilog Example: Small Size Stack Frame, no backchain, no alloca . . . 108
16. Prolog/Epilog Example: Small Size Stack Frame, varag, backchain . . . 108
17. Prolog/Epilog Example: Intermediate Size Stack Frame, no backchain, no alloca, no varargs 108
18. Prolog/Epilog Example: Large Size Stack Frame (4K≤dsasize≤32768), 31-bit . . . 109
19. Prolog/Epilog Example: Huge Size Stack Frame (32768<dsasize), 31-bit . . . 109
20. Bootstrap behavior . . . 137
21. Unhandled Condition Behavior Summary . . . 157
22. Interface Validation Exit Reference Entry Fields . . . 181
23. Heap IDs Recognized by Language Environment Heap Manager . . . 194
24. Routines Using a Parameter List Interface . . . 194
25. CEECIB State Variable, Constant Values, and Associated Actions . . . 265
26. Debugger Language Environment Event Handler Interface . . . 324
27. Debugger Language Environment Event Handler Bit Mask Descriptions . . . 326
28. CWI CEE3CBTS Event Handler Interface Parameters . . . 327
29. Profile Tool — Language Environment Event Handler Interface . . . 331
30. Data Types and Their Abbreviations . . . 340
31. CWI Register Interface Format . . . 341
32. Result Registers for Scalar Routines (CWI Register Interface) . . . 341
33. Language Environment Scalar Math Services . . . 343
34. Degree Input/Output Trig Functions . . . 351
35. Language Environment Scalar Bit Manipulation Routines . . . 352
36. Math Message_IDs . . . 354
37. Language Environment Math Services - Value of Inserts . . . 355
38. Options Control Block (OCB) and Supplementary Options Control Block (SOCB) Type Field Definitions . . . 589
39. Options Control Block (OCB) Field Descriptions . . . 589
40. Options Control Block (OCB) Constants . . . 619
41. Options Control Block (OCB) Cross Reference . . . 620
42. Supplementary Options Control Block (SOCB) Field Descriptions . . . 643
43. Supplementary Options Control Block (SOCB) Constants . . . 645
44. Supplementary Options Control Block (SOCB) Cross Reference . . . 645

© Copyright IBM Corp. 1991, 2002

About this document

This document supports z/OS (5694–A01) and z/OS.e (5655–G52).

IBM z/OS Language Environment (also called Language Environment) provides common services and language-specific routines in a single run-time environment for C, C++, COBOL, Fortran (z/OS only; no support for z/OS UNIX System Services or CICS®), PL/I, and assembler applications. It offers consistent and predictable results for language applications, independent of the language in which they are written.

Language Environment is the prerequisite run-time environment for applications generated with the following IBM compiler products:
- z/OS C/C++
- OS/390® C/C++
- C/C++ Compiler for MVS/ESA™
- AD/Cycle® C/370™ Compiler
- VisualAge for Java, Enterprise Edition for OS/390
- Enterprise COBOL for z/OS and OS/390
- COBOL for OS/390 & VM
- COBOL for MVS & VM (formerly COBOL/370)
- Enterprise PL/I for z/OS and OS/390
- VisualAge PL/I for OS/390
- PL/I for MVS & VM (formerly PL/I MVS™ & VM)
- VS FORTRAN and FORTRAN IV (in compatibility mode)

Restrictions: The following restrictions apply to z/OS.e:
- The following compilers are not licensed for use on z/OS.e:
  - COBOL
  - PL/I
  - FORTRAN
- The following subsystems are not licensed for use on z/OS.e:
  - CICS
  - IMS™
- Execution of applications written in the following languages is not functionally supported on z/OS.e:
  - COBOL (except for precompiled COBOL DB2® stored procedures and other precompiled COBOL applications using the Language Environment preinitialization interface
  - FORTRAN
- The following are not functional and/or not licensed for use on z/OS.e:
  - Language Environment Library Routine Retention (LRR)
  - Language Environment compatibility preinitialization for C and PL/I
  - Run-time library services (RTLS)
- Customers are not permitted to use lower levels of Language Environment on z/OS.e.

Language Environment supports, but is not required for, an interactive debug tool for debugging applications in your native z/OS environment. The IBM interactive Debug Tool is available with z/OS, or with the latest releases of the C/C++, COBOL, PL/I and VisualAge for Java compiler products.

© Copyright IBM Corp. 1991, 2002

Language Environment supports, but is not required for, VS Fortran Version 2 compiled code (z/OS only).

Language Environment consists of the common execution library (CEL) and the run-time libraries for C/C++, COBOL, Fortran, and PL/I.

For more information on VisualAge for Java, Enterprise Edition for OS/390, program number 5655-JAV, see the product documentation.

This book documents the set of low-level interfaces, or Compiler-Writer Interfaces (CWIs), that can be used between the common run-time component and C, C++, COBOL, Fortran, PL/I, and other member run-time components of Language Environment.

Note: Throughout this book there are descriptions of Language Environment messages. The text of these messages might not exactly match that produced by Language Environment. You can find the exact text of messages in *z/OS Language Environment Debugging Guide*.

Using your documentation

The publications provided with Language Environment are designed to help you:

- Manage the run-time environment for applications generated with a Language Environment-conforming compiler.
- Write applications that use the Language Environment callable services.
- Develop interlanguage communication applications.
- Customize Language Environment.
- Debug problems in applications that run with Language Environment.
- Migrate your high-level language applications to Language Environment.

Language programming information is provided in the supported high-level language programming manuals, which provide language definition, library function syntax and semantics, and programming guidance information.

Each publication helps you perform different tasks, some of which are listed in Table 1. All books are available in printed and softcopy formats. For a complete list of publications that you may need, see “Bibliography” on page 675.

Table 1. How to Use z/OS Language Environment Publications

To ...	Use ...
Evaluate Language Environment	*z/OS Language Environment Concepts Guide*
Plan for Language Environment	*z/OS Language Environment Concepts Guide* *z/OS Language Environment Run-Time Migration Guide*
Install Language Environment	*z/OS Program Directory*
Customize Language Environment	*z/OS Language Environment Customization*
Understand Language Environment program models and concepts	*z/OS Language Environment Concepts Guide* *z/OS Language Environment Programming Guide*
Find syntax for Language Environment run-time options and callable services	*z/OS Language Environment Programming Reference*

Table 1. How to Use z/OS Language Environment Publications (continued)

To ...	Use ...
Develop applications that run with Language Environment	*z/OS Language Environment Programming Guide* and your language programming guide
Debug applications that run with Language Environment, diagnose problems with Language Environment	*z/OS Language Environment Debugging Guide*
Get details on run-time messages	*z/OS Language Environment Run-Time Messages*
Develop interlanguage communication (ILC) applications	*z/OS Language Environment Writing Interlanguage Communication Applications* and your language programming guide
Migrate applications to Language Environment	*z/OS Language Environment Run-Time Migration Guide* and the migration guide for each Language Environment-enabled language

How to read syntax diagrams

This section describes how to read syntax diagrams. It defines syntax diagram symbols, items that may be contained within the diagrams (keywords, variables, delimiters, operators, fragment references, operands) and provides syntax examples that contain these items.

Syntax diagrams pictorially display the order and parts (options and arguments) that comprise a command statement. They are read from left to right and from top to bottom, following the main path of the horizontal line.

Symbols

The following symbols may be displayed in syntax diagrams:

Symbol	Definition
►►——	Indicates the beginning of the syntax diagram.
——►	Indicates that the syntax diagram is continued to the next line.
►——	Indicates that the syntax is continued from the previous line.
——►◄	Indicates the end of the syntax diagram.

Syntax items

Syntax diagrams contain many different items. Syntax items include:

- Keywords - a command name or any other literal information.
- Variables - variables are italicized, appear in lowercase and represent the name of values you can supply.
- Delimiters - delimiters indicate the start or end of keywords, variables, or operators. For example, a left parenthesis is a delimiter.
- Operators - operators include add (+), subtract (-), multiply (*), divide (/), equal (=), and other mathematical operations that may need to be performed.
- Fragment references - a part of a syntax diagram, separated from the diagram to show greater detail.
- Separators - a separator separates keywords, variables or operators. For example, a comma (,) is a separator.

Keywords, variables, and operators may be displayed as required, optional, or default. Fragments, separators, and delimiters may be displayed as required or optional.

Item type	Definition
Required	Required items are displayed on the main path of the horizontal line.
Optional	Optional items are displayed below the main path of the horizontal line.
Default	Default items are displayed above the main path of the horizontal line.

Syntax examples

The following table provides syntax examples.

Table 2. Syntax examples

Item	Syntax example
Required item. Required items appear on the main path of the horizontal line. You must specify these items.	```►►─KEYWORD─required_item──────────────►◄``` (KEYWORD followed by required_item)
Required choice. A required choice (two or more items) appears in a vertical stack on the main path of the horizontal line. You must choose one of the items in the stack.	```►►─KEYWORD─┬─required_choice1─┬──────────►◄ └─required_choice2─┘``` (KEYWORD followed by required_choice1 or required_choice2)
Optional item. Optional items appear below the main path of the horizontal line.	```►►─KEYWORD─┬──────────────────┬──────────►◄ └─optional_item─┘``` (KEYWORD followed by optional_item)
Optional choice. An optional choice (two or more items) appears in a vertical stack below the main path of the horizontal line. You may choose one of the items in the stack.	```►►─KEYWORD─┬──────────────────────┬──────►◄ ├─optional_choice1─┤ └─optional_choice2─┘``` (KEYWORD followed by optional_choice1 or optional_choice2)
Default. Default items appear above the main path of the horizontal line. The remaining items (required or optional) appear on (required) or below (optional) the main path of the horizontal line. The following example displays a default with optional items.	```┌─default_choice1──┐ ►►─KEYWORD─┤──────────────────┼──────►◄ ├─optional_choice2─┤ └─optional_choice3─┘``` (KEYWORD followed by default_choice1, optional_choice2, or optional_choice3)

Table 2. Syntax examples (continued)

Item	Syntax example
Variable. Variables appear in lowercase italics. They represent names or values.	►►─KEYWORD─*variable*──────────────────────────►◄
Repeatable item. An arrow returning to the left above the main path of the horizontal line indicates an item that can be repeated. A character within the arrow means you must separate repeated items with that character. An arrow returning to the left above a group of repeatable items indicates that one of the items can be selected, or a single item can be repeated.	►►─KEYWORD─┬─repeatable_item─┬──────────────────►◄ │◄──────────────┘ ►►─KEYWORD─┬─,──────────┬─repeatable_item─┬──────────►◄ │◄───────────┘ └─────────────────────────┘
Fragment. The ─┤ fragment ├─ symbol indicates that a labelled group is described below the main syntax diagram. Syntax is occasionally broken into fragments if the inclusion of the fragment would overly complicate the main syntax diagram.	►►─KEYWORD─┤ fragment ├──────────────────────────►◄ **fragment:** ├─┬─,required_choice1─┬─┬─┬─,default_choice─┬─┬─┤ │ │ │ │ │ └─┴─,required_choice2─┴─┴─┴─,optional_choice─┴─┴

Where to find more information

Please see *z/OS Information Roadmap* for an overview of the documentation associated with z/OS, including the documentation available for z/OS Language Environment.

Accessing z/OS licensed documents on the Internet

z/OS licensed documentation is available on the Internet in PDF format at the IBM Resource Link™ Web site at:

`http://www.ibm.com/servers/resourcelink`

Licensed documents are available only to customers with a z/OS license. Access to these documents requires an IBM Resource Link user ID and password, and a key code. With your z/OS order you received a Memo to Licensees, (GI10-0671), that includes this key code. [1]

To obtain your IBM Resource Link user ID and password, log on to:

`http://www.ibm.com/servers/resourcelink`

To register for access to the z/OS licensed documents:

1. Sign in to Resource Link using your Resource Link user ID and password.
2. Select **User Profiles** located on the left-hand navigation bar.

1. z/OS.e customers received a Memo to Licensees, (GI10-0684) that includes this key code.

Note: You cannot access the z/OS licensed documents unless you have registered for access to them and received an e-mail confirmation informing you that your request has been processed.

Printed licensed documents are not available from IBM.

You can use the PDF format on either **z/OS Licensed Product Library CD-ROM** or IBM Resource Link to print licensed documents.

Using LookAt to look up message explanations

LookAt is an online facility that allows you to look up explanations for most messages you encounter, as well as for some system abends and codes. Using LookAt to find information is faster than a conventional search because in most cases LookAt goes directly to the message explanation.

You can access LookAt from the Internet at:

`http://www.ibm.com/eserver/zseries/zos/bkserv/lookat/`

or from anywhere in z/OS where you can access a TSO/E command line (for example, TSO/E prompt, ISPF, z/OS UNIX System Services running OMVS). You can also download code from the *z/OS Collection* (SK3T-4269) and the LookAt Web site that will allow you to access LookAt from a handheld computer (Palm Pilot VIIx suggested).

To use LookAt as a TSO/E command, you must have LookAt installed on your host system. You can obtain the LookAt code for TSO/E from a disk on your *z/OS Collection* (SK3T-4269) or from the **News** section on the LookAt Web site.

Some messages have information in more than one document. For those messages, LookAt displays a list of documents in which the message appears.

Summary of changes

Summary of changes
for SA22-7568-03
z/OS Version 1 Release 4

The book contains information previously presented in *z/OS Language Environment Vendor Interfaces*, SA22-7568-02, which supports z/OS Version 1 Release 3.

The following changes apply to z/OS Version 1 Release 4.

New information

- Information is added to indicate this book supports z/OS.e. Limitations on the languages supported are in “About this document” on page xiii.
- A new CWI, __info_stack, to provide JAVA with stack segment addresses is described, see “__stack_info() - Stack segment ranges” on page 213.
- Added Debug Tool event codes to signal PIPI sub initializations and PIPI sub terminations; see Table 26 on page 324.

Changed information

- APAR PQ55925 included updates to the description of the common anchor area (CAA) fields:
  - CEECAAEOS
  - CEECAAESS
  - CEECAALEOS
  - CEECAALESS
- CEEBETBL CSECT format to support z/OS.e; see Figure 53 on page 140.
- In support of z/OS.e additional feedback or abend codes were provided for CWIs:
  - CEE3ADDM
  - CEE3CRE
  - CEE3CSYS
  - CEE3MBR
  - CEEPLDE

Deleted information

- A table cross-referencing Language Environment scalar math routines and the names of the called routines was removed.
- References to vector registers and vector routines have been removed; in particular, sections titled:
  - Vector Register Conventions
  - CWI Conventions for Math Routines
  - Vector Math Services
- Deleted detail, which varies from release to release, in descriptions of variables, in non-XPLINK CEESTART format, Section 2, in Figure 48 on page 131 and XPLINK CEESTART format, Section 2, in Figure 49 on page 134.

This book contains terminology, maintenance, and editorial changes. Technical changes or additions to the text and illustrations are indicated by a vertical line to the left of the change.

© Copyright IBM Corp. 1991, 2002

Starting with z/OS V1R2, you may notice changes in the style and structure of some content in this book—for example, headings that use uppercase for the first letter of initial words only, and procedures that have a different look and format. The changes are ongoing improvements to the consistency and retrievability of information in our books.

Summary of changes
for SA22-7568-02
z/OS Version 1 Release 3

The book contains information previously presented in *z/OS Language Environment Vendor Interfaces*, SA22-7568-01, which supports z/OS Version 1 Release 2.

The following changes apply to z/OS Version 1 Release 3.

New information

- A new vendor interface has been added to allow for vendor heap management for C/C++ applications. _CEE_HEAP_MANAGER and __cee_heap_manager() are described in “Vendor heap manager interface” on page 205.
- Support for XPLINK has been added to the Language Environment preinitialization (PIPI). It can now be used with applications using XPLINK, see “CEEPIPI (call_sub_addr_nochk) and CEEPIPI (call_sub_addr_nochk2) — Invocation for Subroutine by Address” on page 186.
- Information was added to the XPLINK definitions for “PPA1 Optional Area Fields” on page 23.
- Explanations have been added for the XPLINK data layouts, beginning with Figure 3 on page 5.
- Information was added describing “__fnwsa() —- CWI to find a writable static area” on page 313.
- An appendix with z/OS product accessibility information has been added.

Changed information

- Event 39 information was updated to indicate that the event is now enabled for COBOL, see “Event Code 39 — Interrupt Received Event” on page 486.

This book contains terminology, maintenance, and editorial changes including changes to improve consistency and retrievability

Summary of changes
for SA22-7568-01
z/OS Version 1 Release 2

The book contains information previously presented in *z/OS Language Environment Vendor Interfaces*, SA22-7568-00, which supports z/OS Version 1 Release 1.

New information

- Support for automatic storage tuning of Language Environment storage areas has resulted in defining two bits in CEECICS, LE_TUNE_SUP and LE_AUTODST, see Figure 89 on page 408. It also resulted in adding two new fields, PGMTYPE and UPDATE_PGMINFO2, in Figure 91 on page 415.
- Changes to improve the diagnosis of storage leaks resulted in a new suboption of HEAPCHK, CALL_LEVEL, see Appendix A, “Options Control Block and Supplementary Options Control Block” on page 589.

- Improvements to CICS dump services have resulted in defining a bit in the "Language Environment Region Control Block" on page 70, CEERCB_CICS_FLAGS, bit 7, CEERCB_CICS_TRANS_OK. Also defined is a new run-time suboption of TERMTHDACT, CICSCESE in Appendix A, "Options Control Block and Supplementary Options Control Block" on page 589.
- Improvements have been made to the way Java programs run under JVM in the Language Environment/CICS Extended Run-Time Library Interface (ERTLI). A 'reusable Language Environment rununit' has been implemented. For changes to the CEECICS calls, see "Language Environment-CICS Interface" on page 402.
- In support of CICS application domain tracing, a new parameter, *statusflags,* has been added to "Thread Initialization" on page 417.
- Enhanced ASCII support has resulted in:
  - A new bit in the compilation flags, see Figure 24 on page 25
  - Four new compiler writer interfaces, see "C/C++-Specific Vendor Interfaces" on page 235
    - __ae_autoconvert_state()
    - __ae_thread_setmode()
    - __ae_thread_swapmode()
    - __isASCII()
  - A new run-time option, FILETAG, for control of run-time file tagging and autoconversion. The parameters are documented in Appendix A, "Options Control Block and Supplementary Options Control Block" on page 589.
- An appendix has been added defining the Machine State Block, Figure 113 on page 653.
- Reusable enclave support uses a newly defined bit, CEEPCB_REUSE, in CDDPCBFLAG2, in the "Language Environment Process Control Block" on page 63.
- Compiler writer interface (CWI) descriptions throughout the book have been enhanced to document the way the CWI is called.

Changed information

- APAR PQ44243, which changes Language Environment to redrive the C run-time library function under certain conditions, resulted in minor changes to "Language Environment Common Anchor Area" on page 32.

This book contains terminology, maintenance, and editorial changes including changes to improve consistency and retrievability.

Summary of changes
for SA22-7568-00
z/OS Version 1 Release 1

This book contains information also presented in *OS/390 Language Environment Vendor Interfaces.*

The following changes apply to z/OS Version 1 Release 1.

New information

- The ability to limit the amount of storage dumped by CEEDUMP has been added via APARs PQ39636 and PQ39927. The new fields CEEOCB_TERMTHDACT_REGSTOR and

CEEOCB_TERMTHDACT_REGSTOR_V have been added to Appendix A, “Options Control Block and Supplementary Options Control Block” on page 589.

- The ability to dynamically change some run-time options has been added via APAR PQ38838. Constants have been added to Appendix A, “Options Control Block and Supplementary Options Control Block” on page 589.
- The ability to quickly freeze or unfreeze a set of threads belonging to the caller’s process has been added via APAR PQ40047. The new fields CEECAA_FRZ_UNSAFE and CEEOPCB_QFEXIT are described in the “Language Environment Common Anchor Area” on page 32 and the “Language Environment Process Control Block” on page 63 respectively. State data can also be retrieved for the frozen threads.

Chapter 1. Common Interfaces and Conventions

This section describes the common run-time library components of Language Environment. The description indicates when a convention is mandatory. These conventions form the basis for a well-behaved application and enhance the ability to do interlanguage communication (ILC).

Language Environment external names begin with the reserved prefix CEE.

Common Run-Time Environment

A thread is represented by a Common Anchor Area (CAA). All thread- and enclave-related resources can be located either directly within the CAA or through the CAA.

An enclave is one or more executable programs that contain one or more separately-compiled bound procedures (also known as compilation units). The executable program that contains the main routine is known as the **root** load module. An enclave can consist of multiple executable programs when a dynamic call is run within the enclave. Fetch mechanisms, such as the C `fetch()` function, introduce a new executable program into the application. However, it typically behaves differently than dynamic calls in today's implementation, in so far as the scope of static external data is concerned. An executable program can exist in a variety of forms. It can be a mixture of an HLL or assembler procedure with Language Environment routines. It can also be a strictly Language Environment library module that does not contain any user-written code.

Situations exist where member subprograms are called from operating environment functions such as SORT, QMF™ or assembler language routines without Language Environment register conventions. Member languages must either disallow this form of specification, or be able to detect this form of access and perform whatever is necessary to re-establish the Language Environment environment.

Library Not All Linkable

Most Language Environment routines cannot be statically linked. In general, it is not possible to make a complete, self-contained module.

Reentrancy

All Language Environment library code is reentrant. All read/write areas are dynamically acquired from STACK or HEAP. Language Environment provides a reentrant environment for compiled code.

Recursion

All Language Environment-supplied library code can be called recursively. For example, if an interrupt occurs in a Language Environment routine and the exception is signaled to some other code (user, Language Environment, or language-specific), that code could, in turn, during its exception processing, use the function that originally caused the exception. This does not mean that the application itself is recursive.

Special handling of certain situations, such as short-on-storage conditions, cause recursive entry to be detected and handled appropriately.

© Copyright IBM Corp. 1991, 2002

AMODE/RMODE

Most Language Environment library routines are AMODE(31) RMODE(ANY). Library routines residing below the 16 MB line are AMODE(ANY) and RMODE(24). These switch to AMODE(24) if necessary and return to the entry AMODE before returning to the caller. HLLs participating in Language Environment and supporting dynamic loading of application programs are responsible for switching and restoring the AMODE between load module calls.

Member Code AMODE Restrictions

Language Environment can allocate any of its control blocks above the line. Any member code that accesses a Language Environment control block must run in AMODE(31) to have addressability to the control blocks.

External Names

Language Environment supports external names such as files, programs, and data structures in the same manner as the host system. External names are limited to eight SBCS characters. No supported host system permits DBCS names.

Some languages permit longer names to be used when referring to externally named objects. In order to conform to the host system requirements, each language can use an algorithm to convert a long internal name to a shorter name that is acceptable to the host system.

Language Environment does not define a common naming convention or name conversion algorithm. Users are responsible for ensuring that names are not ambiguous when long names are converted. External and internal forms of names must match after conversion to a shorter form of the name.

General Register Usage at Entry to Callable Services

The following registers must have the prescribed contents when control reaches the entry point of a Language Environment callable service. Calls that remain within the same language do not need to adhere to the register conventions described below. ILC calls might or might not adhere to these conventions depending upon the languages involved. A library routine that accommodates the differences in the linkage conventions can be used in some ILC cases.

R0 Reserved

R1 Must point to the parameter list or be zero if no parameter list exists

R2–R11
Not referenced by Language Environment; caller's values are passed through transparently

R12 Must point to the CAA upon entry to an external routine; R12 does not have to point to the CAA within a routine

R13 Must point to the caller's DSA

R14 The return address

R15 The address of the called entry point

General Register Usage at Exit from Callable Services

Registers have the following contents when control returns to the caller of the callable service.

R0 Not defined by Language Environment

R1 Not defined by Language Environment

R2–R11
Preserved

R12 Points to the CAA
R13 Points to the caller's DSA
R14 Not preserved
R15 Not preserved

Notes:

1. The called procedure must ensure that R2 through R13 have the same values on exit as they had on entry.
2. The called procedure cannot rely upon the values contained in R0, R1, R14, and R15 unless explicitly stated by the interface.

Floating-Point Register Conventions

No conventions have been defined for floating-point registers. The contents are neither saved nor restored by Language Environment, except by the exception handler when exceptions are raised. Intrinsic functions use these registers to return results. For more details, see "CWI Conventions for Scalar Math Services" on page 340.

Access Register Conventions

No conventions have been defined for access registers. Language Environment neither saves nor restores the contents of the access registers. Language Environment does not restrict exploitation of access registers in the future.

Program Mask Conventions

The maskable program exceptions are enabled for all member languages represented in the root or main load module during Language Environment initialization. Each member language informs Language Environment of its program mask requirements, and Language Environment ORs all of the requirements together and sets the program mask during initialization. During termination, the program mask is reset by Language Environment to its value upon entry to Language Environment initialization.

A language is represented in the load module by providing a load module signature CSECT for each compilation.

A callable service is provided to query, save, restore, and modify the program mask setting. The name of this service is CEE3SPM. Users are responsible for managing program mask setting if they alter the program mask while the application is running. Altering the program mask might change some HLL semantics. Use caution when altering the program mask.

Language Environment neither saves nor restores the program mask setting across calls to Language Environment services or calls within the Language Environment environment.

The run-time option XUFLOW indicates the initial setting of the mask for exponent underflow. You can alter this setting by using the callable service CEE3SPM. (Note, however, that the use of CEE3SPM might alter some HLL semantics.)

In summary, the program mask's initial setting is determined by the requirements of the members within the main load module and by the setting of the XUFLOW run-time option.

Language Environment Conventions

While the enclave is running, the program mask is influenced by the callable service, CEE3SPM, and by members' requirements that are newly-added as a result of a dynamic call or fetch; this is handled by the CWI service CEE3ADDM.

Routine Layout

The following table shows the five types of entry points that Language Environment recognizes as Language Environment-conforming routines. The fifth type is an example of a nonconforming entry point that would be recognized by the member language.

Entry point type is...	If...
Language Environment-conforming	The entry point plus 4 is X'00C3C5C5'. For layout detail see Figure 1.
Language Environment-conforming FASTLINK	The entry point plus 4 is X'01C3C5C5'. FASTLINK linkage conventions are used. For layout detail see Figure 2 on page 5.
Language Environment-conforming XPLINK	The entry point minus 16 is X'00C300500C500F1'. XPLINK linkage conventions are used. For layout detail see Figure 3 on page 5.
C/370	The entry point plus 5 is X'CE'.
CEESTART CSECT	The entry point plus 28 is `CL8'CEESTART'`.
Nonconforming	The entry point is none of the above. Nonconforming entry points are for routines that follow the linking convention in which the name is at the beginning of the routine. X'47F0Fxxx' is the instruction to branch around the routine name.

FASTLINK supports an optimized linkage convention that reduces the total number of instructions for prolog and epilog sequences. XPLINK provides optimal performance for a certain class of applications.

The layout entry for standard routines is shown in Figure 1 and the layout entry for FASTLINK routines is shown in Figure 2 on page 5. The layout entry for standard and FASTLINK routines is defined by the field at offset X'04', X'00' represents standard layouts and X'01' represents FASTLINK layouts.

Language Environment-Conforming Standard Routine Layout Entry

00	B 20(,R15)		Branch around constant areas
04	X'00'	CL3'CEE'	CEE eye catcher
08	Stack frame size for this routine		
0C	Offset to the PPA1 (signed) from routine start		
10	B 01(0, R15)		Disable the +16 entry point
14	Code to acquire a DSA		

Figure 1. Layout Entry of Language Environment-Conforming Routines – Standard

Language Environment-Conforming FASTLINK Routine Layout Entry

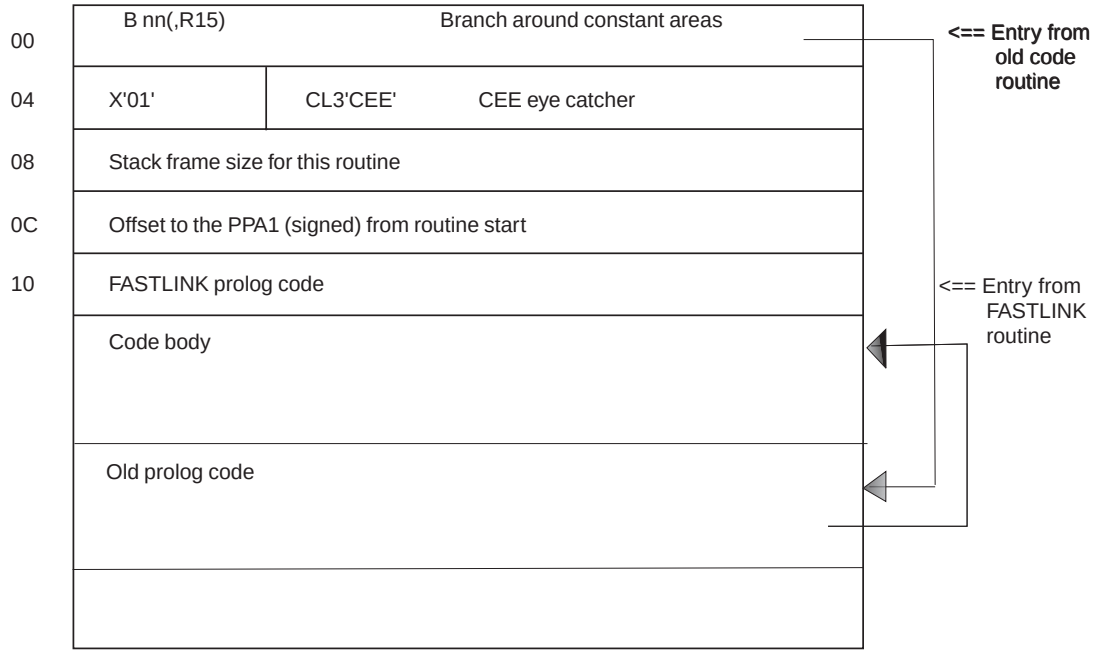

Figure 2. Layout Entry of Language Environment-Conforming Routines – FASTLINK

XPLINK Data Layouts

The layout entry for XPLINK routines is shown in Figure 3. The layout entry for XPLINK routines is defined by the Version field at offset X'00' in the PPA1, see Figure 16 on page 17.

Language Environment-Conforming XPLINK Routine Layout Entry

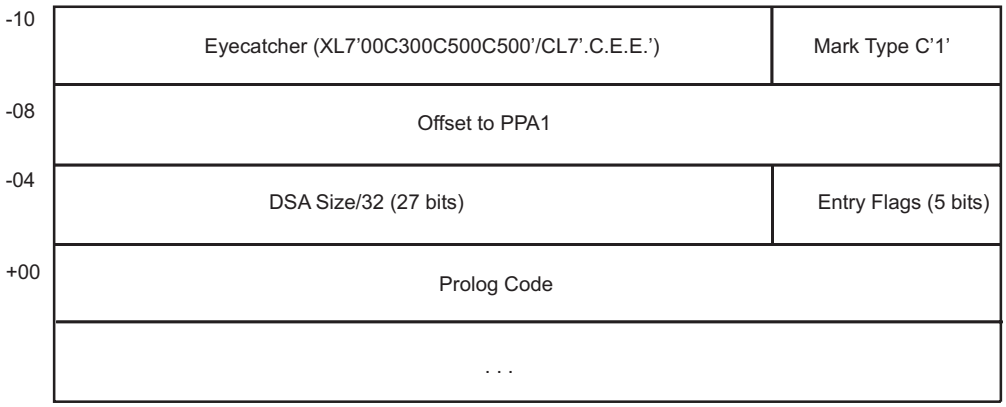

Figure 3. Layout Entry of Language Environment-Conforming Routines – XPLINK

Eyecatcher: Seven byte field containing the XPLINK eyecatcher, XL7’00C300C500C500’.

Mark Type: Field marking the type of code. Entry code is C’1’.

Offset to PPA1: A signed fullword representing the offset from the start of the entry marker to the start of the PPA1.

DSA Size/16: A 28-byte field representing the size of the routine's DSA in quadwords.

Entry Flags: A 4-bit field containing flag bits to identify the type of routine. If bit 0 is on, the routine is an XPLEAF. XPLEAF routines save caller's registers in their own stack frame, but do not update the stack pointer. Bit 1 indicates whether the routine uses the alloca() service.

The compiler emits an XPLINK Stack Extension Marker in front of the call to Language Environment for the overflow prolog sequence for the +4K DSA scenario. Figure 4 depicts this marker.

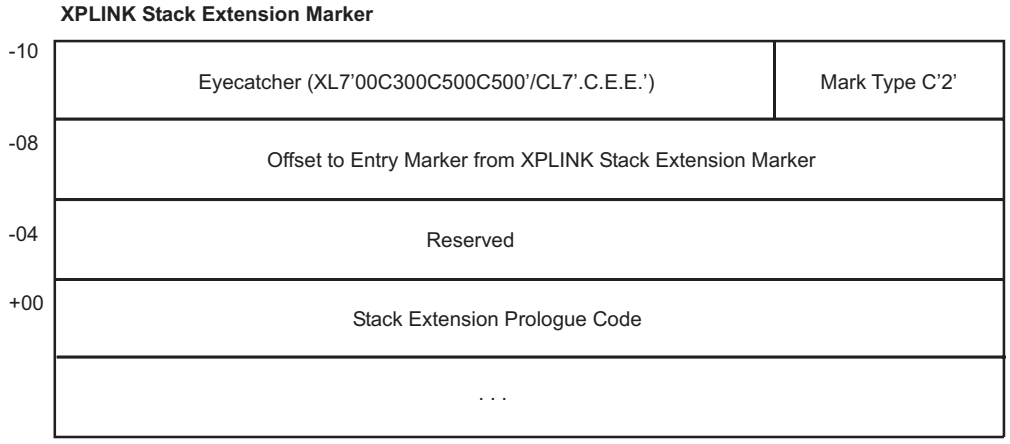

Figure 4. XPLINK Stack Extension Marker

Eyecatcher: Seven byte field containing the XPLINK eyecatcher, XL7'00C300C500C500'.

Mark Type: Field marking the type of code. XPLINK stack extension is C'2'.

Offset to Entry Marker from XPLINK Stack Extension Marker: The signed offset from the start of the XPLINK stack extension marker to the start of the entry point marker.

The XPLINK end of data marker is placed after, or at the end of a section of code, where the compiler may have placed constants. Language Environment's asynchronous signal deliverer uses this in its scan backwards to identify that a signal did not arrive inside a function's prolog. Figure 5 on page 7 depicts this marker.

XPLINK End of Data Marker

	Data . . .	
+00	Eyecatcher (XL7’00C300C500C500’/CL7’.C.E.E.’)	Mark Type C’3’
+08	Offset to Entry Marker from XPLINK End of Data Marker	
+0C	Reserved	

Figure 5. XPLINK End of Data Marker

Eyecatcher: Seven byte field containing the XPLINK eyecatcher, XL7’00C300C500C500’.

Mark Type: Field marking the type of code. XPLINK end of data is C’3’.

Offset to Entry Marker from XPLINK End of Data Marker: The signed offset from the start of XPLINK end of data marker to the start of the entry point marker.

Language Environment implements an 8-byte XPLINK stub entry marker for Language Environment and C runtime stubs. Figure 6 depicts this marker.

XPLINK Stub Entry Marker

-08	Eyecatcher (XL7’00C300C500C500’/CL7’.C.E.E’)	Mark Type C’4’
+00	Stub Code	

Figure 6. XPLINK Stub Entry Marker

Eyecatcher: Seven byte field containing the XPLINK eyecatcher, XL7’00C300C500C500’.

Mark Type: Field marking the type of code. XPLINK Stub is C’4’.

Figure 7 on page 8 shows the entry point layout and Program Prolog Area-1 (PPA1) for C/370 routines; see “Prolog Information Blocks” on page 8 for more information about the PPA1 format.

C Routine Layout Entry and PPA1

00	B xxx(0,15) Branch around prolog data			
04	X'14' Offset to the name	X'CE' (Language Environment signature)	Language Environment Flags	Member Flags
08	A(PPA2)			
0C	A (Block Debugging Information (BDI)) or zero			
10	Stack frame size			
	⋮			
yy	Length of name		Untruncated entry/label name	

Figure 7. Layout Entry of C/370-Conforming Routines

Prolog Information Blocks

Several prolog information blocks have been defined:

- the standard layout is defined in Figure 8 on page 10
- the FASTLINK layout is defined in Figure 9 on page 11
- the IEEE floating-point layout is defined in Figure 10 on page 12
- the XPLINK layout is defined in Figure 16 on page 17, Figure 17 on page 18, and Figure 23 on page 24

The prolog information exists for every block or internal procedure. A block or internal procedure is found by R15 pointing to an area saved in the DSA. Code to allocate stack space is not required in the Language Environment prolog; see Figure 32 on page 84.

Program Prolog Area-1 (PPA1) appears for every Language Environment entry point. There is a one-to-one correlation between a PPA1 and a DSA. The length of the name offset field (PPA1 offset 00) ranges from 32 to 255 bytes. Note that for the FASTLINK version, the value in this field is the offset to the name length field, divided by 2; therefore, the value of the field may range from X'10' to X'FF'. An offset zero indicates that an entry name does not exist. A PL/I BEGIN block that does not contain a name is an example of offset zero in the PPA1 length field. The content of the entry/label name field is defined by member languages. The name can be SBCS characters or DBCS characters bracketed by shift-codes. Member-defined information can be placed starting at offset X'20'. Fields described as fullword offsets are treated as signed offsets.

Program Prolog Area-2 (PPA2) appears once for each compile unit and can immediately follow the primary PPA1. The control level field indicates the change level of the prolog. The timestamp and version information normally appears at the end of PPA2 and is optional. The version and release data fields identify the level of the compiler that produced the object code. You can use the PPA2 field at offset

X'10' to determine the primary entry point for the compilation unit. It is zero if the compilation unit primary entry point does not exist. Member-defined information can be placed at the end of PPA2.

The Block Debug Information (BDI) and Compile Debug Information (CDI) blocks are member-defined for coordination with the Debug Tool.

In the timestamp block, as shown in Figure 25 on page 25, the two characters that indicate the version are to be used at the discretion of the high level language that produces the block; they are not interrogated by Language Environment. In addition, the dump service uses the service level field to add the module service level information to the traceback.

Figure 8 on page 10 shows the Language Environment-supported prolog for standard routines.

PPA1: Entry Point Block

X'00'	Offset to the length of name	X'CE' (Lang Env Signature)	Lan Env flags	Member flags
X'04'	Address of PPA2			
X'08'	Signed offset to BDI from the entry point of zero			
X'0C'	Reserved			
X'10'	Reserved			
X'14'	Reserved			
X'18'	Reserved			
X'1C'	Language Environment flags (16 bits)			
	⋮			
	Length of name	Untruncated entry/label name		

PPA2: Compile Unit Block

X'00'	Member identifier	Member Subid	Member Defined	Control Level (= 1)
X'04'	V(CEESTART) for load module			
X'08'	Offset from PPA2 to CDI, zero if no compile unit debug info			
X'0C'	Offset from PPA2 to timestamp/version information, or zero			
X'10'	A(PEP) - address of the compilation unit's Primary Entry Point			
	⋮			

Figure 8. Prolog Constants Format – Level 1 (Standard)

Figure 9 on page 11 shows the Language Environment-supported prolog for FASTLINK routines.

PPA1: Entry Point Block

X'00'	Offset/2 to length of name	X'CE' (Lang Env Signature)	Lan Env flags	Member flags
X'04'	Signed offset to PPA2 from the entry point			
X'08'	Signed offset to BDI from the entry point of zero			
X'0C'	Reserved			
X'10'	GPR save bit mask	Reserved - must be zero		
X'14'	Member PPA1 word			
X'18'	CEL flag 2	Max space used by nonleaf rtn in caller's DSA/8		
X'1C'	Language Environment flags (16 bits)			
	⋮			
	Length of name	Untruncated entry/label name		

PPA2: Compile Unit Block

X'00'	Member identifier	Member Subid	Member Defined	Control Level (= 2)
X'04'	Signed offset from PPA2 to CEESTART for load module			
X'08'	Signed offset from PPA2 to CDI, zero if no compile unit debug info			
X'0C'	Signed offset from PPA2 to timestamp/version information, or zero			
X'10'	Signed offset from PPA2 to compilation unit Primary Entry Point			
	⋮			

Figure 9. Prolog Constants Format – Level 2 (FASTLINK)

Figure 10 on page 12 shows the Language Environment-supported prolog for IEEE floating-point routines.

PPA1: Entry Point Block

X'00'	Offset/2 to length of name	X'CE' (Lang Env Signature)	Lan Env flags	Member flags
X'04'	Signed offset to PPA2 from the entry point			
X'08'	Signed offset to DBI from the entry point of zero			
X'0C'	Pointer to entry point data descriptors			
X'10'	GPR save bit mask		Unsigned offset/16 to DSR of FPR8-15 save area	FPR save bit mask
X'14'	Member PPA1 word			
X'18'	CEL flag 2	Max space used by nonleaf rtn in caller's DSA/8		
X'1C'	CEL flag 3	Unsigned offset/2 from PPA1 to code descriptor list		
	⋮			
	Length of name	Untruncated entry/label name		

PPA2: Compile Unit Block

+00	Member Identifier	Member Subid	Member Defined	Control Level (= 3)
+04	Signed offset from PPA2 to CEESTART for load module			
+08	Signed offset from PPA2 to CDI or zero if no compile unit debug info			
+0C	Signed offset from PPA2 to timestamp/version information or zero			
+10	Signed offset from PPA2 to the compilation unit’s Primary Entry Point			
+14	Compilation flags	Reserved (must be zero)		
	⋮			

Figure 10. Prolog Constants Format – Level 3 (IEEE Floating-Point)

The Member Subid (PPA2 offset X'01') is defined by the member language.

Compilation Flag bits

```
'0.......'B  Indicates that program was compiled for hexadecimal floating-point
'1.......'B  Indicates that program was compiled for binary floating-point
'.0......'B  Indicates that the code is compiler generated user code
'.1......'B  Indicates that the code is associated with library code
'..0.....'B  Program does not contain service information
'..1.....'B  Program contains service information
'...00000'B  Reserved
```

Figure 11. Compilation Flag bits

Program Flags — PPA1 Offset X'02'

Language Environment program flags (PPA1 offset X'02') are shown in Figure 12 and are described following the figure.

```
'0.......'B  Internal procedure
'1.......'B  External procedure
'.0......'B  Primary entry point
'.1......'B  Secondary entry point
'..0.....'B  This procedure/block does not have a DSA
'..1.....'B  This procedure/block has a DSA
'...0....'B  Compiled object
'...1....'B  Library object
'....0...'B  Program sampling interrupts are to be attributed
                to *LIBRARY
'....1...'B  Program sampling interrupts are to be attributed
                to this program
'.....0..'B  Not an exit DSA - no cleanup needed
'.....1..'B  Exit DSA - cleanup processing at exit is needed
'......0.'B  Use own language exception model
'......1.'B  Use caller's exception model (enablement, et.al.)
'.......x'B  Reserved
```

Figure 12. Language Environment PPA1 Offset X'02'

Bit 0	Internal/external procedure **0** Indicates this routine is an internal procedure with a nesting level greater than 0. **1** Indicates this routine is an external procedure with a nesting level of 0.
Bit 1	Primary/secondary entry point **0** Indicates this entry point is a primary entry point. **1** Indicates this entry point is a secondary entry point.
Bit 2	Code with/without a DSA **0** Indicates that this block of code did not allocate its own DSA. **1** Indicates that this block of code did allocate its own DSA.
Bit 3	Library/compiler-generated user code **0** Indicates that the code is compiler-generated user code. **1** Indicates that the code is associated with the library code.
Bit 4	Sampling flag **0** Sampling interrupts that occur in this block of code are attributed to library support code. **1** Sampling interrupts that occur in this block of code are attributed to compiler-generated user code.

Bit 5	Exit DSA marking **0** Indicates that no action is required to be taken on behalf of this routine when abnormally collapsing the associated DSA (nonreturn style). **1** Indicates that this routine requires action to be taken when abnormally collapsing the associated DSA (nonreturn style). The associated DSA is known as an exit DSA. For additional information, see “DSA Exit Routines” on page 261.
Bit 6	Condition management actions **0** Indicates that the HLL of the generated code participates in condition management activities. **1** Indicates that the HLL of the generated code chooses not to participate in condition management activities. **All phases** of condition management skip the associated DSA. This includes enablement, driving member condition handlers, and user handlers. It is invalid to establish a user handler at this stack frame. Also, stack frames with this flag set are not counted in calls to CEEMRCR.
Bit 7	Reserved and must be zero.

Program Flags — PPA1 Offset X’18’

Language Environment program flags (PPA1 offset X'18') for FASTLINK are shown in Figure 13 and are described following the figure.

```
'0.......'B  CEL Version 1 Release 1 stack frame layout
'1.......'B  FASTLINK stack frame layout
'.000....'B  CEL version 1 Release 1 calling conventions (Version 2)
'.001....'B  Old C C private conventions (+16 Entry Point disabled)
'.101....'B  FASTLINK Special conventions (Version 2)
'.110....'B  FASTLINK V1R2 conventions (Version 2)
'.111....'B  FASTLINK Public conventions (Version 2)
'....00..'B  Non Sleaf
'....01..'B  Sleaf return/entry address not in save area but in R14 & R15
'....10..'B  Sleaf return/entry address in save area
'......00'B  Old code (+0) entry disabled
'......01'B  Old code (+0) entry enabled by member simulation routine
'......10'B  Old code (+0) entry enabled by line code
```

Figure 13. Language Environment PPA1 Flag 2 Offset X’18’

Bit 0	Stack Frame Layout (see note) **0** Indicates the routine uses the Version 1 Release 1 stack frame layout. **1** Indicates the routine uses the Version 1 Release 2 FASTLINK frame layout.
Bit 1-3	Calling conventions (see note) **0** Entry point uses R1 non-FASTLINK conventions (version 2). **1** Entry point uses old C conventions. **6** Entry point uses V1 R2 FASTLINK conventions and is potentially bilingual. **7** Entry point supports FASTLINK conventions and is potentially bilingual.

Bit 4-5	SLEAF only valid for FASTLINK; otherwise, it must be zero. **0** Indicates this entry point is not a SLEAF routine; it allocates its own DSA. **1** Indicates this entry point is a SLEAF routine that keeps its return address in R14 and the entry address in R15 — not in the DSA. **2** Indicates this entry point is a SLEAF routine that keeps its return and entry address in a normal save area location.
Bit 6-7	Old entry enablement only valid for FASTLINK; otherwise, it must be zero. **0** Indicates +0 entry point is disabled. **1** Indicates +0 entry point is enabled but does not obtain its own stack frame; it uses the same stack frame as the primary entry. **2** Indicates +0 entry point is enabled and obtains its own stack frame. Two stack frames are obtained by this routine when it is called from old code: one for old code entry and the other normal one created by the primary entry point.

Note: For Version 1 Release 2, if Bit 0 is 0, which indicates Version 1 Release 1 DSA layout, Bit 1-3 may only have a value of 1, which indicates old C conventions. If Bit 0 is 1, which indicates FASTLINK DSA layout, Bit 1-3 may only have a value of 6, which indicates FASTLINK conventions.

Program Flags — PPA1 Offset X’1C’

Language Environment program flags (PPA1 offset X'1C') are shown in Figure 14 and are described following the figure.

```
'00.............'B  Old code entry performs full save (14,15,2-12)
'01.............'B  Old code performs partial save (Version 2)
'10.............'B  Old code performs partial save + R12 (Version 2)
'..0............'B  Asynchronous condition processing not deferred
'..1............'B  Asynchronous condition processing deferred (Version 2)
'...0...........'B  Word 0 of save area not initialized
'...1...........'B  Word 0 of save area initialized
'....0..........'B  Code is non-external glue
'....1..........'B  Code is external glue
'.....0.........'B  Real return address saved in save area at offset 0x0C
'.....1.........'B  Real return address saved in linkage area (Version 2)
'......0........'B  Storage argument area start indeterminate
'......1........'B  Storage argument area start valid
'.......0.......'B  R12 must contain CAA address upon old code entry
'.......1.......'B  R12 not defined upon old code entry (Version 2)
'........0......'B  Not vararg routine
'........1......'B  Vararg routine
'.........0.....'B  Asynchronous interrupts are not supported
'.........1.....'B  Asynchronous interrupts are supported
'..........0....'B  No module service level
'..........1....'B  Module service level applied
'...........x...'B  Reserved
'............x..'B  Reserved
'.............x.'B  Reserved
'..............x'B  Reserved
```

Figure 14. Language Environment PPA1 Flag 3 Offset X’1C’

Bit 0 - 9 are reserved in Prolog Constants Format – Level 1 (Standard). The definition below is for Prolog Constants Format – Level 2 (FASTLINK).

Bit 0 - 1 (Entry Point Partial Save Flag)	(only valid for FASTLINK bilingual routines which have Bit 5, return address location, set to one. In other cases this field must be zero. **0** Indicates that the +0 entry point performs full save (GPR14-15 and GPR2 through GPR12). **1** Indicates that the +0 entry point performs partial save, the same as the primary entry point. **2** Indicates that the +0 entry point performs partial save, the same as the primary entry point plus R12 is also saved.
Bit 2	Deferred Asynch Exceptions **0** Indicates allow asynchronous exceptions to take effect. **1** Indicates defer asynchronous exceptions.
Bit 3	Save area Language Word (Offset 0 in Save area). **0** Indicates that the language word is initialized (required for DSAs that are flagged in the save area). **1** Indicates that the language word is uninitialized.
Bit 4	Glue code **0** Indicates that the code is not glue. **1** Indicates that the code is external binder glue or run-time simulated prologue. (Language Environment currently has no operational dependency on this flag.)
Bit 5	Return Address Location **0** Indicates that the return address is in the caller provided save area in the normal R14 slot at offset 12 unless 'stolen' by Language Environment to enable CEL to gain control upon return from the routine (e.g., by CEEHDLR to provide for automatic de-registration of a user condition handler routine). . **1** Indicates that the return address maybe in the linkage area of the callee's DSA.
Bit 6	Argument List Valid (FASTLINK only) **0** Indicates that the portion of the argument list corresponding to the parameters passed in registers may not be initialized.. **1** Indicates that the portion of the argument list corresponding to the parameters passed in registers is valid. This bit is potentially used by debug or by readers of a dump. In Version 2 all compilers must have an optimization level which produces a prologue in which all parameters passed in registers are stored into the argument list.
Bit 7	CAA Address valid at FASTLINK + 0 entry point **0** Indicates that R12 must contain a valid CAA pointer at entry (preserved). **1** Indicates that R12 contents are undefined at entry and must be preserved.
Bit 8	C vararg routine **0** Indicates that the routine is not a C or C++ varargs. **1** Indicates that the routine is a C or C++ varargs.
Bit 9	Async Interrupt Support **0** Indicates that the routine does not support async interrupts. **1** Indicates that the routine supports async interrupts.
Bit 10	Module Service Level Info **0** Indicates that the function has no service applied. **1** Indicates that the function has service applied.

Member Identifiers — PPA2 Offsets X'00' and X'01'

The Member Identifier (PPA2 offset X'00') identifies the product origin of the running code by compiler. Figure 15 on page 17 shows the codes for the various compiler products.

The product codes are assigned by IBM and the assignment codes are in decimal. The member list table's implementation size is bound to a maximum of 17 (0 through 16) for Language Environment.

```
00  Reserved
01  Language Environment  (CEL)
02  Reserved
03  OS/390 C/C++, C VM/ESA
04  Reserved
05  COBOL for OS/390 & VM, COBOL for MVS & VM
06  Debug Tool
07  VS FORTRAN
08  DCE
09  Available
10  PL/I for MVS & VM
11  VisualAge PL/I for OS/390
12  Berkeley Sockets
13  Available
14  Reserved
15  ASSEMBLER
16  Reserved
```

Figure 15. Language Environment-Enabled Language Member Identifiers

PPA1 in Support of XPLINK

To optimize the space used for control purposes, the structure and contents of the PPA1 for XPLINK have been redefined. The control block is made up of a fixed part followed by a contiguous optional part, with the presence of optional fields indicated by flag bits. Optional fields, if present, are stored immediately following the fixed part of the PPA1 aligned on fullword boundaries in the order specified below.

PPA1: XPLINK Entry Point Block Fixed Area (Version 3)

+00	Version	LE Signature X'CE' (Lan Env Signature)	Saved GPR Mask		
+04	Signed Offset to PPA2 from start of PPA1				
+08	PPA1 Flags 1	PPA1 Flags 2	PPA1 Flags 3	PPA1 Flags 4	
+0C	Length/4 of Parms		Length/2 of Prolog	Alloca Reg	Offs/2 R4 Chg
+10	Length of Code				

Figure 16. Prolog Constants Format – Level 4 (XPLINK), PPA1: Entry Point Block (Version 3)

The PPA1 is located through an offset field preceding the entry point which provides flexibility to group all PPA1s either by compilation unit or by module. The new PPA1 content is extensible in that a version field identifies the particular table structure.

Program prolog areas are mandatory for languages participating in XPLINK. Each entry point must have a corresponding PPA1 associated with it.

PPA1 Fixed Area Fields:

+0	Version	CEL Signature X'CE' (Lang Env Signature)	Saved GPR Mask		
+4	Signed offset to PPA2 from start of PPA1				
+8	PPA1 Flag 1 0 DSA Format 0: 31 bit 1: 64 bit 1 0: Short form PPA1 1: Reserved 2 Exception Model 0: Own 1: Caller's 3 BDI Type Flag 0: tiny 1: full PPA3 4 Invoke member for DSA exit event 5 XPLink Exit DSA 6 Special Linkage 7 Vararg function	PPA1 Flag 2 0 Procedure 0: Internal 1: External 1 Reserved, 0 2 Reserved, 0 3 Reserved, 0 4 Reserved, 0 5 Reserved, 0 6 Reserved, 0 7 Reserved, 0	PPA1 Flag 3 0 State Variable Locator 1 Argument Area Length 2 FPR Mask 3 AR Mask 4 Member PPA1 Word 5 Block Debug Info 6 Interface Mapping Flags 7 Java Method Locator Table Indicating fields in optional area	PPA1 Flag 4 0 Reserved, 0 1 Reserved, 0 2 Reserved, 0 3 Reserved, 0 4 Reserved, 0 5 Reserved, 0 6 Reserved, 0 7 Name Length and Name Indicating fields in optional area	
+12 0x0c	Length/4 of Parms		Length/2 of Prolog	Alloca Reg	Offset/2 to StackPointer Update
+16 0x10	Length of Code				

Figure 17. PPA1: XPLINK Entry Point Block Fixed Area (Version 3) Details

Version: An 8-bit field that is set to X'02' to identify this PPA1 as having the Level 4, XPLINK (Version 3) layout.

Note: No Version 1 or Version 2 layouts exist. PPA1 layouts prior to XPLINK are identified by X'00' for a standard layout and X'01' for a FASTLINK layout in the field at offset X'04'.

Language Environment Signature: An 8-bit field that must be set to X'CE'.

Saved GPR Mask: A 16 bit mask, indicating which registers are saved and restored by the associated routine. Bit 0 indicates register 0, followed by bits for registers 1 to 15 in order.

Signed offset to PPA2 from the start of PPA1: The offset of the PPA2 block belonging to the compilation unit containing the function described by this PPA1.

PPA1 Flag 1: program flags (PPA1 offset X'08') are shown in Figure 17 and are described below.

```
'0.......'B  GPR Save area is 32 bit.
'1.......'B  GPR Save area is 64 bit.
'.0......'B  Reserved.
'..0.....'B  Own exception model.
'..1.....'B  Inherited exception model.
'...0....'B  BDI is a tiny PPA3.
'...1....'B  BDI is a full PPA3.
'....0...'B  Do Not call member for Exit DSA event.
'....1...'B  Call member for Exit DSA event.
'.....0..'B  Do Not treat as PL/I style exit DSA.
'.....1..'B  Treat as PL/I style exit DSA.
'......0.'B  This is not a Special linkage routine.
'......1.'B  This is a Special linkage routine.
'.......0'B  Not a Vararg routine.
'.......1'B  Vararg routine.
```

Figure 18. Language Environment PPA1 Flag 1 Offset X'08'

The PPA1 Flag 1 field (PPA1 offset X'08') contains 8 bits, as shown above, and are described as follows:

Bit 0	Format of General Purpose Registers (GPR) save area **0** Indicates that GPRs are saved as 32-bit quantities. **1** Indicates that GPRs are saved as 64-bit quantities.
Bit 1	Format of PPA1 **0** Indicates that this is a short form of the PPA1. **1** Reserved.
Bit 2	Exception Model Flag **0** Indicates that this routine uses it's own exception model. **1** Indicates that this routine inherited the exception model from its caller.
Bit 3	BDI Type Flag **0** Indicates that the BDI is a tiny PPA3. **1** Indicates that the BDI is a full PPA3.
Bit 4	Call Member for DSA Exit flag **0** Indicates that the owning member of the DSA should not be called for Exit DSA processing. **1** Indicates that the owning member of the DSA should be called for Exit DSA processing.
Bit 5	XPLINK Exit DSA Flag **0** Indicates that the associated stack frame is not an XPLINK Exit DSA. **1** Indicates that the associated stack frame is an XPLINK Exit DSA and its R7 (return addr) should be given control during stack collapse.
Bit 6	Special Linkage Flag **0** Indicates that this is not a special linkage routine. **1** Indicates that this is a special linkage routine used to handle calls between XPLINK and non-XPLINK routines or to handle calls that cause a stack segment extension.
Bit 7	Vararg Flag **0** Indicates that this is not a variable argument (Vararg) routine. **1** Indicates that this is a Vararg routine.

PPA1 Flag 2: program flags (PPA1 offset X'09') are shown in Figure 17 on page 18 and are described below.

```
'0...............'B  Internal procedure
'1...............'B  External procedure
'.0000000'B  Reserved for future use (must all be zero).
```

Figure 19. Language Environment PPA1 Flag 2 Offset X'09'

Bit 0	Internal/External procedure **0** Indicates that this procedure is an internal procedure with a nesting level greater than zero. **1** Indicates that this procedure is an external procedure with a nesting level of zero.
Bit 1 - 7	Reserved for future use.

PPA1 Flag 3: program flags (PPA1 offset X'0A') are shown in Figure 17 on page 18 and are described below.

```
'0.......'B  State Variable locator field is not in optional area.
'1.......'B  State Variable locator field is in the optional area.
'.0......'B  Argument Area Length is not in the optional area.
'.1......'B  Argument Area Length is in the optional area.
'..0.....'B  FP Register Mask is not in the optional area.
'..1.....'B  FP Register Mask is in the optional area.
'...0....'B  No ARs are saved. AR mask not in optional area.
'...1....'B  ARs are saved. AR mask in optional area.
'....0...'B  Member PPA1 word is not present in optional area.
'....1...'B  Member PPA1 word is present in the optional area.
'.....0..'B  Offset to BDI is not present in optional area.
'.....1..'B  Offset to BDI is present in the optional area.
'......0.'B  Interface mapping flags not in the optional area.
'......1.'B  Interface mapping flags in the optional area.
'.......0'B  Java Method Locator Table not in the optional area.
'.......1'B  Java Method Locator Table in the optional area.
```

Figure 20. Language Environment PPA1 Flag 3 Offset X'0A'

Bit 0	State Variable Locator Flag **0** Indicates that this field is not present in the optional part of the PPA1. **1** Indicates that this field is present in the optional part of the PPA1.
Bit 1	Argument Area Length **0** Indicates that this field is not present in the optional part of the PPA1. **1** Indicates that this field is present in the optional part of the PPA1.
Bit 2	Floating-Point Registers Flag **0** Indicates that the Floating-Point registers are not saved in the DSA. **1** Indicates that the Floating-Point registers are saved in the DSA and that the FPR mask and Offset to FPR savearea is present in the optional PPA1 area. If this field is present, the entire word containing FPR Mask and AR Mask is present in the optional area.

Bit 3	Access Registers Flag **0** Indicates that the Access Registers are not saved in the DSA. **1** Indicates that the Access Registers (as indicated by the Saved AR Bit Mask field) are saved in the DSA and the AR mask in the optional area. If this field is present, the entire word containing FPR Mask, Alloca Reg, and AR Mask is present in the optional area.
Bit 4	Member PPA1 Word Flag **0** Indicates that this field is not present in the optional part of the PPA1. **1** Indicates that this field is present in the optional part of the PPA1.
Bit 5	Offset to BDI Flag **0** Indicates that this field is not present in the optional part of the PPA1. **1** Indicates that this field is present in the optional part of the PPA1.
Bit 6	Interface Mapping Flag **0** Indicates that this field is not present in the optional part of the PPA1. **1** Indicates that this field is present in the optional part of the PPA1.
Bit 7	Java™ Method Locator Table **0** Indicates that this field is not present in the optional part of the PPA1. **1** Indicates that this field is present in the optional part of the PPA1.

PPA1 Flag 4: program flags (PPA1 offset X'0B') are shown in Figure 17 on page 18 and are described below.

```
'0000000.'B  Reserved for future optional fields (must all be zero).
'.......0'B  Name length and name are not in the optional area.
'.......1'B  Name length and name in the optional area.
```

Figure 21. Language Environment PPA1 Flag 4 Offset X'0B'

Bit 0 - 6	Reserved for future optional fields
Bit 7	Procedure/Label Name Flag **0** Indicates that the length of name field and the entry/label name field are not present in the optional part of the PPA1. **1** Indicates that the length of name field and the entry/label name field are present in the optional part of the PPA1.

Length/4 of Parms: Length of expected parameter area for this function in fullwords (for vararg functions, the length of the fixed portion of the parameter list). This is used for copying parameters on stack extension. For vararg functions the entire caller's argument area must be copied on stack extension.

Length/2 of Prolog: Length of prolog instruction sequence in halfwords starting from the entry point. The prolog is complete when all conditions described in this architecture are satisfied. This includes: saving the non-volatile registers used by the function, including FPRs and ARs; updating the stack pointer; and loading the alloca() register. Other instructions from the function body, including setting up various base registers, may be moved into the prolog, so no component can assume anything about the state of registers within the prolog without scanning the prolog code.

alloca() Register: The register used to point to automatic storage (and other parts of the originally-allocated stack frame) in functions that use alloca(). This must be zero if alloca() is not used.

Offset/2 to Stack Pointer Update: The offset in halfwords from the Entry Point to the beginning of the instruction that updates the stack pointer (register 4). For XPLeaf routines, this field will be set to zero.

Length of Code: The length of the code for this function, starting from the Entry Point Marker associated with this PPA1 to the last instruction in the function, in bytes. This does not necessarily include instructions which are the target of ″execute,″ which may be in other parts of the code section, the stack frame, or writable static.

State Variable Locator: Defines the location of the state variable. Bits 0-3 contain the number of a GPR whose contents are added to the unsigned offset in bits 4-31 to calculate the address of the state variable. The register used to address the State Variable, typically the stack register or the alloca() register, must be set in the prolog and retain its value throughout the function. This field is optional; its presence is indicated by PPA1 Flag 3, Bit 0.

Argument Area Length: Length of argument area allocated by this function on the stack. If present, this field contains the size of the largest argument list used by this function.

This field is optional; its presence is indicated by PPA1 Flag 3, Bit 1.

This field is required for every function that contains a call with an argument list longer than 128 bytes.

FPR Mask: a 16-bit mask indicating which of FPRs are saved and restored by this routine. Bit 0 indicates FPR0, followed by bits for FPR1 to FPR 15. Space is reserved in the function's local storage for those FPRs actually saved by the function.

Access Register Mask: Reserved for future use.

Floating Point Register Save Area Locator: Defines the location of the Floating Point Register Save Area. Bits 0-3 contain the number of a GPR whose contents are added to the unsigned offset in Bits 4-31 to calculate the address of this save area. The register used to address this save area, typically the stack register or the alloca() register, must be set in the prolog and retain its value throughout the function. This field is optional; its presence is indicated by PPA1 Flag 3, Bit 2.

Access Register Save Area Locator: Reserved for future use.

Member PPA1 word: This word contains the following information for C and C++ (previously part of the Member Flags) when present.

```
'00000000000000000000000........'B  Reserved (must be zero)
'........................0.......'B  Argparse
'........................1.......'B  No argparse
'.........................0......'B  Redirection
'.........................1......'B  No redirection
'..........................0.....'B  Execops
'..........................1.....'B  No execops
'...........................00000'B  Reserved (must be zero)
```

Figure 22. Language Environment PPA1 Flag Word as defined by C++

For C++ this word is used for flags as shown in the preceding figure and are described as follows:

Bit 0 - 23	Reserved (must be zero)
Bit 24	Noargparse **0** Indicates argparse. **1** Indicates no argparse.
Bit 25	Noredirection **0** Indicates redirection. **1** Indicates no redirection.
Bit 26	Noexecops **0** Indicates execops. **1** Indicates no execops.
Bit 27 - 31	Reserved (must be zero)

Offset to Block Debug Information: Signed offset to block debug information from the start of PPA1. This field is optional; its presence is indicated by PPA1 Flag 3, Bit 5.

Interface mapping flags: This field is provided to allow interface mapping by a glue routine when an XPLINK routine is called from non-XPLINK. It describes the linkage type, the floating-point parameters expected by this routine, and the format of the function return value. It has the same format as the second word of the call descriptor described on page 11 Call Descriptor. This field is optional; its presence is indicated by PPA1 Flag 3, Bit 6.

Java Method Locator Table: Used to locate meta-information for Java classes. This field is optional; its presence is indicated by PPA1 Flag 3, Bit 7.

PPA1 Optional Area Fields: There are several optional PPA1 Fields; each one's presence indicated by a flag bit in PPA1 Flags3 or PPA1 Flags4. Where an optional field is less than 4 bytes in length, the entire word is present if any of the fields in that word are present. Unused parts of the word are filled with zeroes. The optional fields are fullword aligned and appear in the order listed here. The field name and length are given:

State Variable Locator (PPA1 Flag 3, Bit 0)	4

Argument Area Length (PPA1 Flag 3, Bit 1)	4

FPR mask (PPA1 Flag 3, Bit 2)	AR mask (PPA1 Flag 3, Bit 3)	4

Note: If either Bit 2 or Bit 3 of Flag 3 is on, the fullword variable representing FPR mask and AR mask is present.

Floating Point Register Save Area Locator (PPA1 Flag 3, Bit 2)	4

Access Register Save Area Locator (PPA1 Flag 3, Bit 3)	4

PPA1 Member Word (PPA1 Flag 3, Bit 4)	4

Offset to Block Debug Info (PPA1 Flag 3, Bit 5)	4

Interface Mapping Flags (PPA1 Flag 3, Bit 6)	4

Java Method Locator Table (MLT) (PPA1 Flag 3, Bit 7)	8

Length of Name (PPA1 Flag 4, Bit 7)	Name of Function	variable length
Name of Function (continued)		

PPA2 in support of XPLINK

PPA2: Compile Unit Block

+00	Member Identifier	Member Subid	Member Defined	Control Level (= 4)
+04	Signed offset from PPA2 to CEESTART for load module			
+08	Signed offset from PPA2 to CDI or zero if no compile unit debug info			
+0C	Signed offset from PPA2 to timestamp/version information or zero			
+10	Signed offset from PPA2 to the compilation unit's Primary Entry Point			
+14	Compilation flags	Reserved (must be zero)		

Figure 23. Prolog Constants Format – Level 4 (XPLINK), PPA2: Compile Unit Block

Level 4 (XPLINK), PPA2: Compile Unit Block bits:

```
'0.......'B  Indicates that program was compiled for hexadecimal floating-point
'1.......'B  Indicates that program was compiled for binary floating-point
'.0......'B  Indicates that the code is compiler generated user code
'.1......'B  Indicates that the code is associated with library code
'..0.....'B  Program does not contain service information
'..1.....'B  Program contains service information
'...0....'B  Not compiled with XPLINK(STOREARGS)
'...1....'B  Compiled with XPLINK(STOREARGS)
'....0...'B  Reserved
'.....0..'B  Compiled unit is EBCDIC
'.....1..'B  Compiled unit is ASCII
'......0.'B  Reserved for enhanced ASCIIl
'.......0'B  Not compiled with XPLINK
'.......1'B  Compiled with XPLINK
```

Figure 24. Level 4 (XPLINK), PPA2: Compile Unit Block bits

The XPLINK(STOREARGS) and XPLINK flags were added in PPA2 Level 4.

Timestamp and Version: Figure 25 shows the format of the information in the timestamp and version.

00	CL4'yyyy' Year of compilation	
04	CL4'mmdd' Date of compilation	
08	CL4'hhmm' Time of compilation	
0C	CL2'ss' Time of compilation	CL2 'vv' Version
10	CL4'rrmm' Release/Modification	
14	Service level string length	Untruncated service level string

Figure 25. Timestamp and Version Information

Epilog Code

Explicit code to free stack space is not required in the Language Environment epilog.

CEEYEPAF — Locates an XPLINK or non-XPLINK entry point PPA1 and PPA2 from a passed DSA

CEEYEPAF locates an XPLINK or non-XPLINK entry point, PPA1, and PPA2 from a passed DSA.

Syntax

void CEEYEPAF (*dsa_ptr, dsa_fmt, epa_ptr, (ppa1_ptr, ppa2_ptr),(fc))*

```
POINTER    *dsa_ptr;
INT4       *dsa_fmt;
POINTER    *epa_ptr;
POINTER    *ppa1_ptr;
POINTER    *ppa2_ptr;
FEED_BACK  *fc;
```

CEEYEPAF

From a non-XPLINK routine, call this CWI interface as follows:

```
L     R15,CEECAALEOV-CEECAA(,R12)   Address of CAA in R12
L     R15,4(,R15)
BALR  R14,R15
```

dsa_ptr **(input)**
Pointer to the DSA to be examined.

dsa_fmt **(input/optionally output)**
Format of the stackframe. 0=Upward-growing stack, 1=Downward-growing stack, -1=CWI determines and returns.

epa_ptr **(output)**
Address of Entry Point. If unable to identify entry, returns zero.

ppa1_ptr **(output/optional)**
Optional PPA1 address to be returned. If unable to identify PPA1 address, returns zero.

ppa2_ptr **(output/optional)**
Optional PPA2 address to be returned. If unable to identify PPA2 address, returns zero.

fc **(output/optional)**
Optional feedback code. If omitted and the CWI will end in other than a CEE000, the CWI raises the feedback code as an error condition. The following conditions may result from this CWI:

CEE000	Severity	0
	Msg_No	N/A
	Message	The service completed successfully.
CEE3EM	Severity	0
	Msg_No	3452
	Message	Unable to find a valid entry point or PPA1 or PPA2 for this DSA.

Note: It is recommended, for performance reasons, that whenever possible, this service is passed the DSA format instead of determining it dynamically. When used in conjunction with CWI CEEYDSAF, to find the previous DSA, the DSA format derived from CEEYDSAF can be passed directly into CEEYEPAF to identify the owner of an XPLINK or non-XPLINK DSA.

__ep_find () — returns the address of the entry point of the function owning the dsa_p DSA

The __ep_find() function returns the address of the entry point of the function owning the *dsa_p* DSA.

__ep_find() can be used when the passed-in DSA is not in the current address space. To access storage outside the current address space, the user must provide the *callback_p* parameter. *callback_p* is a pointer to a user-written function that fetches all data required by __ep_find(). Generally, the (**callback_p*)() function would obtain the data using some application-dependent method (like BPX1PTR) and move it into the current address space, where __ep_find() can access it directly. If the passed-in DSA is in the same address space and is directly accessible to __ep_find(), *callback_p* can be NULL.

Syntax

```
#include <edcwccwi.h>

void *_ep_find (const void * dsa_p, int dsa_fmt, void * (*callback_p)(void *
data_p, size_t data_l))
```

const void ***** *dsa_p*
: Pointer to the DSA. *dsa_p* may point to a DSA in another address space or in some other place not directly accessible by __ep_find(). If this address is not directly accessible, the *callback_p* parameter must be non-NULL. The callback function will be used to access *dsa_p* indirectly.

int dsa_fmt
: The format of the DSA pointed to by *dsa_p*. The allowed values for *dsa_fmt* are:

__EDCWCCWI_UP
: This value indicates that *dsa_p* points to a non-XPLINK DSA.

__EDCWCCWI_DOWN
: This value indicates that *dsa_p* points to an XPLINK DSA.

*void * (*callback_p)()*
: Pointer to a user-provided function that fetches data not normally accessible by __ep_find(). If *callback_p* is NULL, __ep_find() accesses *dsa_p* and any other required Language Environment data areas directly in the current address space. All required data must be directly accessible to __ep_find() in this case. The user-provided (**callback_p*)() function is passed the address and length of data to access. It must fetch the data in some application-dependent manner, and make the data available in the current address space in a place accessible to __ep_find(). *(*callback_p)()* must return a pointer to the copied data. This data must remain available to __ep_find() until the next call to *(*callback_p)()*, or until __ep_find() returns to its caller, whichever happens first. On subsequent calls, (**callback_p*)() is allowed to reuse the same data passback area. There is no provision for *(*callback_p)()* to pass back an error return code, indicating that the requested data could not be obtained. If *(*callback_p)()* cannot return the requested data, it must not return to __ep_find(). When an error occurs, *(*callback_p)()* may:

- longjmp() back to some error return point in the user code that called __ep_find()
- abend or otherwise terminate abnormally

- exit(), pthread_exit()
- Raise a caught signal where the catcher does longjmp() so as not to return to __ep_find()
- Use Language Environment condition management to bypass __ep_find() after the error and resume in user code.
- Recover in some other way that does not involve returning to __ep_find().

__ep_find() calls (**callback_p*)() with two parameters:

*void * data_p*
: Pointer to the start of the required data. This address might not be in the current address space.

size_t data_l
: The number of bytes of data required. *data_l* will never exceed 16 bytes. If (**callback_p*)() cannot pass back the complete data requested, it must not return to __ep_find().

Returned Value

If successful, __ep_find() returns the entry point address of the function owning the *dsa_p* DSA.

If unsuccessful, __ep_find() returns a NULL pointer, and sets errno. to one of the following values:

ESRCH
: This error indicates that the entry point could not be located for the passed-in DSA. This error also occurs if *dsa_p* is NULL when __ep_find() is called.

EINVAL
: This error occurs if *dsa_fmt* is not **__EDCWCCWI_UP** or **__EDCWCCWI_DOWN**.

Usage Notes:

1. __ep_find() may cause program checks if it accesses invalid addresses. This is especially likely to happen if *callback_p* is NULL and the DSA being looked at is not valid. For this reason, the caller should consider having a signal catcher set up to handle SIGSEGV with appropriate error recovery.

CEEYPPAF — Locates a field in the PPA1 optional area based on a passed pointer to the PPA1

CEEYPPAF locates a field in the PPA1 optional area based on a passed pointer to the PPA1 and an indicator for which field is requested.

Syntax

void CEEYPPAF (*ppa1_ptr, opt_nam, opt_ptr, opt_ptr2, fc*)

```
POINTER    *ppa1_ptr;
INT4       *opt_nam;
POINTER    *opt_ptr;
POINTER    *opt_ptr2;
FEED_BACK  *fc;
```

CEEYPPAF
: From a non-XPLINK routine, call this CWI interface as follows:

```
L     R15,CEECAALEOV-CEECAA(,R12)   Address of CAA in R12
L     R15,8(,R15)
BALR  R14,R15
```

ppa1_ptr **(input)**
Pointer to the PPA1.

opt_nam **(input)**
An integer indicating the requested PPA1 optional field.

```
1 = State variable locator
2 = Argument area length
3 = Floating point register mask and Offset to FPR savearea
4 = Access register mask and Offset to AR savearea
5 = Member PPA1 word
6 = Block debug info offset
7 = Interface mapping flags
8 = Java method locator table
9 = Name length/name
```

opt_ptr **(output)**
Address of the requested optional field in passed PPA1. If unable to identify field, returns zero.

opt_ptr2 **(output/optional)**
Optional address of the offset to the FPR or AR savearea if FPR (3) or AR (4) requested. If unable to identify or not applicable, returns zero.

fc **(output/optional)**
Optional feedback code. If omitted and the CWI will end in other than a CEE000, the CWI raises the feedback code as an error condition. The following conditions may result from this CWI:

CEE000	Severity	0
	Msg_No	N/A
	Message	The service completed successfully.
CEE3EN	Severity	0
	Msg_No	3453
	Message	Requested optional field not found in the passed PPA1.
CEE3EO	Severity	0
	Msg_No	3544
	Message	Optional field requested is not valid (1-9).
CEE3EP	Severity	0
	Msg_No	3545
	Message	Unable to verify the passed PPA1 as valid for XPLINK.

Language Environment Dynamic Storage Area – Non-XPLINK

A DSA (dynamic storage area) is an extension to the save area described in the OS Type I linkage convention. The DSA is described in Figure 26 on page 30. Note that DSAs are sometimes referred to as *stack frames*. This DSA is used by exception handling and Debug Tool services. A macro is provided for assembler language programs.

00	'0000'X Note 1	Member-defined	
04	CEEDSABACK - standard save area back chain		Note 2
08	CEEDSAFWD - standard save area forward chain		Note 3
0C	CEEDSASAVE - GPRs 14, 15, 0-12		Note 4
48	CEEDSALWS - PL/I LWS		Note 8
4C	CEEDSANAB - Current Next Available Byte (NAB) in stack		Note 2
50	CEEDSAPNAB - End of Prolog NAB		
54	Member-defined		Note 5
58	Member-defined		
5C	Member-defined		
60	Member-defined		
64	Reserved		Note 6
68	Member-defined		
6C	CEEDSAMODE - Return address of the module that caused the last mode switch.		Note 7
70	Member-defined		
74	Member-defined		
78	Reserved for future exception handling		
7C	Reserved for future use		

Figure 26. Language Environment Dynamic Storage Area – Non-XPLINK Format

R13 addresses the currently active DSA or standard system save area. The DSA is required for all callers of Language Environment services. A DSA is allocated every time a block is entered and might be extended for member use. For the code sequences to allocate or extend a DSA, see “Allocate/Extend/Return Storage in User Stack” on page 82 and “Allocate/Return Storage in Library Stack” on page 86.

All DSAs and save areas are backward-chained. A stopping DSA, known as the *dummy DSA*, the *zeroth stack frame*, or the *zeroth DSA*, indicates the first DSA on the stack. The DSA layout includes all fields used/accessed by Language Environment and language-specific components.

Notes on DSA Format:

1. IBM language products use these two bytes. All other products must set these two bytes to X'0000'.
2. This field must be initialized.
3. This field is not used by Language Environment but is reserved for compatibility. If it is used, it is the standard forward chain of save areas.

4. This area should only be used to save the caller's general registers. General registers R14 through R12 are saved during prolog and restored during epilog. Bit 0 of R14 indicates the AMODE of the caller.
5. The member-defined fields are established by the caller.
6. This field is reserved for Debug Tool use. It is currently used by the compiled code EXecute hook mechanism.
7. This field is used by the Language Environment library routines.
8. If any vendor package calls a PL/I application, the caller's DSA must have the address of the PL/I LWS. Before calling PL/I user or library routines, the application must pick up the address of the LWS from the CAA (CEECAALWS) and store it into the DSA at CEEDSALWS.

The following is the minimum set of DSA requirements:
- CEEDSANAB must contain a valid NAB (Next Available Byte).
- CEEDSAMODE does not need to be initialized.
- CEEDSABACK must be properly set.
- R14 and R15, used as the linkage registers, must be saved in the appropriate offsets within the DSA.

Implementation Note: Non-Language Environment DSAs can be in the save area chain. Routines that scan the stack should be aware that the length of the save area and the saved register contents might not conform to Language Environment conventions.

Language Environment Dynamic Storage Area – XPLINK

An XPLINK DSA (Dynamic Storage Area) differs significantly from the non-XPLINK DSA based on the OS Type I linkage convention that is described in the following figure:

000	CEEDSAHP_BIAS - Stack Bias, DO NOT USE	Note 1
800	CEEDSAHP4TO15 - Save area for GPRs 4-15	Note 2
830	Reserved for use by run-time	
838	CEEDSAHPTRAN - Debug Area	Note 3
83C	CEEDSAHP_ARG_PRE - Argument prefix area	Note 4
840	CEEDSAHP_ARGLIST - Start of variable length argument list	Note 5

Figure 27. Language Environment Dynamic Storage Area – XPLINK Format

In an XPLINK function, the currently active DSA is located by R4. However, R4 is ″biased″ by x'800' (2048) bytes. This bias needs to be added to the contents of R4 to get the actual start of the XPLINK register save area.

XPLINK DSAs can be back-chained using the value of GPR4 in the register save area. However, GRP4 is only optionally saved. The correct way to find the caller's DSA is to add the size of the current DSA to its location.

Note:

- This is the size of the bias between the actual value in the XPLINK stack register (R4) and the start of the DSA. This area is not usable by the current function. It will contain the DSAs of any called XPLINK functions.
- A called XPLINK function will only save the registers that might be altered during its execution.
- Used by Debug Tool.
- Used by stack switching glue code for compatibility with non-XPLINK functions.
- Area where argument list for called functions will be built. Only parameters that are not passed in registers will be stored into the argument area.

Language Environment Common Anchor Area

Each thread is represented by a Common Anchor Area (CAA). It is the central communication area for the environment. All thread- and enclave-related resources are anchored, provided for, or can be obtained through the CAA. The CAA is generated during thread initialization and deleted during thread termination. The CAA points to the encompassing Enclave Data Block (EDB).

The CAA is addressed by R12 when calling Language Environment-participating external routines. This requirement is relaxed when calling internal routines within a given HLL.

Fields in the CAA should be used as described in other sections of this document. In particular, fields should not be modified and routine addresses should not be used as entry points, except as specified. Fields marked reserved exist for migration of specific languages, or internal use by Language Environment. Their location in the CAA is defined by Language Environment, but their use is not. They should be neither used nor referenced except as specified by the language that defines them.

The following three tables show the format of the CAA.
- Table 3 shows the CAA field descriptions.
- Table 4 on page 39 shows the CAA constants.
- Table 5 on page 40 shows the CAA cross reference information.

Table 3. Common Anchor Area (CAA) Field Descriptions

Offsets		Type	Len	Name (Dim) (* = Reserved)	Description
Dec	Hex				
0	(0)	STRUCTURE	976	CEECAA	CAA mapping
0	(0)	CHARACTER	976	CEECAA_EXTERNAL	External portion
0	(0)	BITSTRING	1	CEECAAFLAG0	CAA Flags
		1111 11..		*	Reserved
		.... ..1.		CEECAAXHDL	Bypass exception handling
		1		*	Reserved
1	(1)	BITSTRING	1	*	Reserved
		11..		*	Reserved
		..1.		CEECAADBGINIT	Debugger is init'd

Table 3. Common Anchor Area (CAA) Field Descriptions (continued)

Offsets		Type	Len	Name (Dim) (* = Reserved)	Description
Dec	Hex				
		...1 1111		*	Reserved
2	(2)	BITSTRING	1	CEECAALANGP	PL/I Compatibility flags
		1111		*	Reserved
		.... 1...		CEECAATHFN	If set, NO PL/I FINISH on-unit is active
		.... .111		*	Reserved
3	(3)	CHARACTER	5	*	Reserved
8	(8)	ADDRESS	4	CEECAABOS	Start of current storage seg
12	(C)	ADDRESS	4	CEECAAEOS	End of current storage seg
16	(10)	CHARACTER	52	*	Reserved
68	(44)	SIGNED	4	CEECAATORC	Thread level ret code
68	(44)	SIGNED	2	*	
70	(46)	SIGNED	2	CEECAATURC	
72	(48)	CHARACTER	44	*	Reserved
116	(74)	ADDRESS	4	CEECAATOVF	Stack overflow rtn
120	(78)	CHARACTER	168	*	Reserved
288	(120)	ADDRESS	4	CEECAAATTN	Addr of CEL attention handler
292	(124)	CHARACTER	56	*	Reserved
348	(15C)	ADDRESS	4	CEECAAHLLEXIT	Set by CEEBINT
Debugger controls					
352	(160)	CHARACTER	56	*	Reserved
408	(198)	BITSTRING	12	CEECAAHOOK	Code to pass control to the debugger
CEECAAHOOK will contain: `ST 12,CEEDSARENT` Put return addr into DSA `BALR 12,0` Get addressability `L 12,CEECAADIMA-*(,12)` Get A(CEECAADIMADDR) `BALR 12,12` Go with 12 the base reg.					
420	(1A4)	ADDRESS	4	CEECAADIMA	A(debugger entry)
Each of the following hook switches will contain: `DS X'0700',S(CEECAAUDHOOK)` When the hook switch is activated, the X'0700' is changed to X'45C0', so it becomes: `BAL 12,CEECAAUDHOOK`					
424	(1A8)	CHARACTER	72	CEECAAHOOKS	Hook control words for debug
424	(1A8)	CHARACTER	4	CEECAAALLOC	ALLOCATE descr. built
428	(1AC)	CHARACTER	4	CEECAASTATE	New statement begins
432	(1B0)	CHARACTER	4	CEECAAENTRY	Block entry
436	(1B4)	CHARACTER	4	CEECAAEXIT	Block exit

Common Anchor Area (CAA)

Table 3. Common Anchor Area (CAA) Field Descriptions (continued)

Offsets		Type	Len	Name (Dim) (* = Reserved)	Description
Dec	Hex				
440	(1B8)	CHARACTER	4	CEECAAMEXIT	Multiple block exit
444	(1BC)	CHARACTER	32	CEECAAPATHS	PATH hooks
444	(1BC)	CHARACTER	4	CEECAALABEL	At a label constant
448	(1C0)	CHARACTER	4	CEECAABCALL	Before CALL
452	(1C4)	CHARACTER	4	CEECAAACALL	After CALL
456	(1C8)	CHARACTER	4	CEECAADO	DO block starting
460	(1CC)	CHARACTER	4	CEECAAIFTRUE	True part of IF
464	(1D0)	CHARACTER	4	CEECAAIFFALSE	False part of IF
468	(1D4)	CHARACTER	4	CEECAAWHEN	WHEN group starting
472	(1D8)	CHARACTER	4	CEECAAOTHER	OTHERWISE group
476	(1DC)	CHARACTER	4	CEECAACGOTO	GOTO hook for C
480	(1E0)	CHARACTER	4	CEECAARSVDH1	Reserved hook
484	(1E4)	CHARACTER	4	CEECAARSVDH2	Reserved hook
488	(1E8)	CHARACTER	4	CEECAARSVDH3	Reserved hook
492	(1EC)	CHARACTER	4	CEECAARSVDH4	Reserved hook -End of Debugger-
496	(1F0)	CHARACTER	80	CEECAAMEMBER_AREA	
496	(1F0)	CHARACTER	4	*	Reserved
500	(1F4)	ADDRESS	4	CEECAACRENT	C or C++ writable static
504	(1F8)	CHARACTER	24	*	Reserved
528	(210)	ADDRESS	4	CEECAAEDCV	C/C++ run-time library vector table
532	(214)	CHARACTER	44	*	Reserved
576	(240)	CHARACTER	24	*	Reserved
600	(258)	CHARACTER	36	CEECAA_TCASRV	TCA Service Rtn Vctr
600	(258)	ADDRESS	4	CEECAA_TCASRV_USERWORD	
604	(25C)	ADDRESS	4	CEECAA_TCASRV_WORKAREA	
608	(260)	ADDRESS	4	CEECAA_TCASRV_GETMAIN	
612	(264)	ADDRESS	4	CEECAA_TCASRV_FREEMAIN	
616	(268)	ADDRESS	4	CEECAA_TCASRV_LOAD	
620	(26C)	ADDRESS	4	CEECAA_TCASRV_DELETE	
624	(270)	ADDRESS	4	CEECAA_TCASRV_EXCEPTION	
628	(274)	ADDRESS	4	CEECAA_TCASRV_ATTENTION	
632	(278)	ADDRESS	4	CEECAA_TCASRV_MESSAGE	
636	(27C)	CHARACTER	4	*	Reserved
640	(280)	ADDRESS	4	CEECAALWS	Addr of PL/I LWS
644	(284)	ADDRESS	4	CEECAASAVR	Register save
648	(288)	CHARACTER	36	*	Reserved
684	(2AC)	BITSTRING	1	CEECAASYSTM	Underlying Op Sys

Table 3. Common Anchor Area (CAA) Field Descriptions (continued)

Offsets		Type	Len	Name (Dim) (* = Reserved)	Description
Dec	Hex				
685	(2AD)	BITSTRING	1	CEECAAHRDWR	Underlying Hardware
686	(2AE)	BITSTRING	1	CEECAASBSYS	Underlying Subsystem
687	(2AF)	BITSTRING	1	CEECAAFLAG2	
		1...		CEECAABIMODAL	Bimodal addressing
		.1..		CEECAA_VECTOR	Vector hardware avail
		..1.		CEECAATIP	Thread terminating
		...1		CEECAA_THREAD_INITIAL	Initial thread
		.... 1...		CEECAA_TRACE_ACTIVE	Library trace is active (the TRACE run-time option was set)
		.... .1..		*	Reserved
		.... ..1.		CEECAA_ENQ_WAIT_INTERRUPTABLE	
		1		*	Reserved
688	(2B0)	UNSIGNED	1	CEECAALEVEL	CEL level identifier
689	(2B1)	BITSTRING	1	CEECAA_PM	Image of current program mask
690	(2B2)	CHARACTER	2	*	Reserved
692	(2B4)	ADDRESS	4	CEECAAGETLS	Addr of CEL library stack mgr
696	(2B8)	ADDRESS	4	CEECAACELV	Addr of CEL LIBVEC
700	(2BC)	ADDRESS	4	CEECAAGETS	Addr of CEL get stack stg rtn
704	(2C0)	ADDRESS	4	CEECAALBOS	Start of library stack stg seg
708	(2C4)	ADDRESS	4	CEECAALEOS	End of library stack stg seg
712	(2C8)	ADDRESS	4	CEECAALNAB	Next available byte of lib stg
716	(2CC)	ADDRESS	4	CEECAADMC	Addr ESPIE Devil-May-Care rtn
720	(2D0)	SIGNED	4	CEECAACD	Most recent ABEND completion code
720	(2D0)	SIGNED	4	CEECAAABCODE	
724	(2D4)	SIGNED	4	CEECAARS	Most recent ABEND reason code
724	(2D4)	SIGNED	4	CEECAARSNCODE	
728	(2D8)	ADDRESS	4	CEECAAERR	Addr of the current CIB
732	(2DC)	ADDRESS	4	CEECAAGETSX	Addr of CEL stack stg extender
736	(2E0)	ADDRESS	4	CEECAADDSA	Addr of the dummy DSA

Common Anchor Area (CAA)

Table 3. Common Anchor Area (CAA) Field Descriptions (continued)

Offsets		Type	Len	Name (Dim) (* = Reserved)	Description
Dec	Hex				
740	(2E4)	SIGNED	4	CEECAASECTSIZ	Vector Section Size
744	(2E8)	SIGNED	4	CEECAAPARTSUM	Vector Partial Sum Number
748	(2EC)	SIGNED	4	CEECAASSEXPNT	Log of Vector Section Size
752	A(2F0)	ADDRESS	4	CEECAAEDB	
756	A(2F4)	ADDRESS	4	CEECAAPCB	
The following two fields are used for validation of the CAA.					
760	(2F8)	ADDRESS	4	CEECAAEYEPTR	Addr of CAA eyecatcher
764	(2FC)	ADDRESS	4	CEECAAPTR	Addr of this CAA
768	(300)	ADDRESS	4	CEECAAGETS1	DSA alloc - R13 not DSA addr
772	(304)	ADDRESS	4	CEECAASHAB	ABEND shunt routine address
776	(308)	ADDRESS	4	CEECAAPRGCK	Pgm interrupt code for CAADMC
780	(30C)	BITSTRING	1	CEECAAFLAG1	CAA Flags 1
		1...		CEECAASORT	Call to DF/SORT is active
		.111 1111		*	Reserved
781	(30D)	CHARACTER	3	*	Reserved
784	(310)	SIGNED	4	CEECAAURC	Thread level return code
The following four fields are for FASTLINK capability.					
788	(314)	ADDRESS	4	CEECAAESS	End of current user stack
792	(318)	ADDRESS	4	CEECAALESS	End of current library stack
796	(31C)	ADDRESS	4	CEECAAOGETS	Overflow user seg from FASTLINK
800	(320)	ADDRESS	4	CEECAAOGETLS	Overflow lib seg from FASTLINK
The following field contains the Pre-Init Compatibility Control Block address.					
804	(324)	ADDRESS	4	CEECAAPICICB	Addr of pre-init compat cb
The following field is for FASTLINK capability.					
808	(328)	ADDRESS	4	CEECAAOGETSX	User DSA ext from FASTLINK
812	(32C)	SIGNED	4	*	Fields used by GOTO and CEEHTRAV
812	(32C)	SIGNED	2	CEECAAGOSMR	When set will be used to indicate additional frames to skip

Table 3. Common Anchor Area (CAA) Field Descriptions (continued)

Offsets		Type	Len	Name (Dim) (* = Reserved)	Description
Dec	Hex				
814	(32E)	SIGNED	2	*	Indicate additional frames to skip.
816	(330)	ADDRESS	4	CEECAALEOV	Addr of Lang Env/z/OS UNIX LIBVEC
820	(334)	SIGNED	4	CEECAA_SIGSCTR	SIGSAFE counter
824	(338)	BITSTRING	4	CEECAA_SIGSFLG	SIGSAFE flags
		1...		CEECAA_SIGPUTBACK	Signal putback
		.1..		CEECAA_SA_RESTART	SA_RESTART loopback is required this time
		..1.		*	Reserved
		...1		CEECAA_SIGSAFE	It is safe to unconditionally accept delivery of a synchronous signal
		.... 1...		CEECAA_CANCELSAFE	It is safe to unconditionally accept delivery of a synchronous cancel
		.... .1..		CEECAA_SIGRESYNCH	One or more synchronous signals may have been recently put back the last time a signal was resolicited while returning from library to user code
		.... ..1.		CEECAA_FRZ_UNSAFE	It is unsafe to freeze the thread
824	(338)	BITSTRING	3	*	Reserved
828	(33C)	CHARACTER	8	CEECAATHDID	Thread id
836	(344)	ADDRESS	4	CEECAA_DCRENT	CRENT anchor for DCE
840	(348)	ADDRESS	4	CEECAA_DANCHOR	DCE anchor per thread
844	(34C)	ADDRESS	4	CEECAA_CTOC	TOC anchor for CRENT
848	(350)	ADDRESS	4	CEECAARCB	
852	(354)	SIGNED	4	CEECAACICSRSN	CICS reason code from member language
856	(358)	ADDRESS	4	CEECAAMEMBR	Addr of thread-level
860	(35C)	ADDRESS	4	CEECAA_SIGNAL_STATUS	Signal status of the terminating thread member list

Common Anchor Area (CAA)

Table 3. Common Anchor Area (CAA) Field Descriptions (continued)

Offsets		Type	Len	Name (Dim) (* = Reserved)	Description
Dec	Hex				
864	(360)	ADDRESS	4	CEECAA_HCOM_REG7	HCOM saved R7
864	(360)	ADDRESS	4	CEECAA_HCOM_REG14	HCOM saved R14
868	(364)	ADDRESS	4	CEECAA_STACKFLOOR	Lowest usable addr in XP stack
872	(368)	ADDRESS	4	CEECAAHPGETS	XP stack extension rtn
876	(36C)	ADDRESS	4	CEECAAEDCHPXV	C/C++ XPLINK libvec
880	(370)	ADDRESS	4	CEECAAFOR1	Reserved for FORTRAN
884	(374)	ADDRESS	4	CEECAAFOR2	Reserved for FORTRAN
888	(378)	ADDRESS	4	CEECAATHREADHEAPID	Thread heapid
892	(37C)	CHARACTER	4	CEECAA_SYS_RTNCODE	System (kernel) return code
896	(380)	CHARACTER	4	CEECAA_SYS_RSNCODE	System (kernel) reason code
900	(384)	ADDRESS	4	CEECAAGETFN	Address of the WSA swap routine
904	(388)	CHARACTER	8	*	Reserved
912	(390)	ADDRESS	4	CEECAASIGNGPTR	Pointer to 'signam' external variable in a C application
916	(394)	SIGNED	4	CEECAASIGNG	Value of sign of lgamma() -1 - negative sign 0 - zero +1 - positive sign
920	(398)	ADDRESS	4	CEECAA_FORDBG	Ptr to AFHDBHIM - FORTRAN hook interface
924	(39C)	BITSTRING	1	CEECAAAB_STATUS	Validity flags
		1...		CEECAAAB_GR0_VALID	CEECAAAB_GR0 is valid
		.1..		CEECAAAB_ICD1_VALID	CEECAAAB_ICD1 is valid
		..1.		CEECAAAB_ABCC_VALID	CEECAAAB_ABCC is valid
		...1		CEECAAAB_CRC_VALID	CEECAAAB_CRC is valid
		.... 1...		CEECAAAB_GR15_VALID	CEECAAAB_GR15 is valid
		.... .111		*	Reserved
925	(39D)	UNSIGNED	1	CEECAA_STACKDIRECTION	Stack direction
926	(39E)	BITSTRING	2	*	Reserved
928	(3A0)	SIGNED	4	CEECAAAB_GR0	Reg 0 at the time of abend

Table 3. Common Anchor Area (CAA) Field Descriptions (continued)

Offsets		Type	Len	Name (Dim) (* = Reserved)	Description
Dec	Hex				
932	(3A4)	SIGNED	4	CEECAAAB_ICD1	SDWAICD1
936	(3A8)	SIGNED	4	CEECAAAB_ABCC	SDWAABCC
940	(3AC)	SIGNED	4	CEECAAAB_CRC	SDWACRC
944	(3B0)	ADDRESS	4	CEECAAAGTS	Entry point of CEEVAGTS routine
948	(3B4)	ADDRESS	4	CEECAA_LER5N1	Reserved
952	(3B8)	ADDRESS	4	CEECAAHERP	Address of CEEHERP routine
956	(3BC)	ADDRESS	4	CEECAAUSTKBOS	Start of user stack segment
960	(3C0)	ADDRESS	4	CEECAAUSTKEOS	End of user stack segment
964	(3C4)	ADDRESS	4	CEECAAUSERRTN@	Address of thread start routine. Undefined on IPT or prior to thread init event.
968	(3C8)	CHARACTER	8	CEECAAUDHOOK	Hook swapping XPLINK
976	(3D0)	CHARACTER	1	*	Reserved
977	(3D1)	BITSTRING	1	CEECAAUDHOOKSW	Hook switch
978	(3D2)	BITSTRING	1	*	Reserved
979	(3D3)	CHARACTER	6	*	Reserved
985	(3D9)	ADDRESS	4	CEECAACEL_HPXV_B	Address of XPLINK compact vector for Base library
989	(3DC)	ADDRESS	4	CEECAACEL_HPXV_M	Address of XPLINK compact vector for Math library
993	(3E0)	ADDRESS	4	CEECAACEL_HPXV_L	Address of XPLINK compact vector for Locale library
997	(3E4)	ADDRESS	4	CEECAACEL_HPXV_O	Address of XPLINK compact vector for Open library

Table 4. Common Anchor Area (CAA) Constants

Len	Type	Value	Name	Description
Declare constants for operating system, hardware, and subsystem CEECAASYSTM, CEECAAHRDWR, CEECAASBSYS				
1	DECIMAL	0	CEECAASYUND	Undefined
1	DECIMAL	1	CEECAASYUNS	Unsupported
1	DECIMAL	2	CEECAASYVM	VM
1	DECIMAL	3	CEECAASYMVS	z/OS Underlying Hardware

Common Anchor Area (CAA)

Table 4. Common Anchor Area (CAA) Constants (continued)

Len	Type	Value	Name	Description
1	DECIMAL	0	CEECAAHWUND	Undefined
1	DECIMAL	1	CEECAAHWUNS	Unsupported
1	DECIMAL	2	CEECAAHW370	System/370™ non-XA
1	DECIMAL	3	CEECAAHWXA	System/370 XA
1	DECIMAL	4	CEECAAHWESA	System/370 ESA Underlying Subsystem
1	DECIMAL	0	CEECAASSUND	Undefined
1	DECIMAL	1	CEECAASSUNS	Unsupported
1	DECIMAL	2	CEECAASSNON	No subsystem
1	DECIMAL	3	CEECAASSTSO	TSO
1	DECIMAL	5	CEECAASSCIC	CICS
Declare constants for stack direction CEECAA_STACKDIRECTION				
1	DECIMAL	0	CEECAASTACK_UP	UP
1	DECIMAL	1	CEECAASTACK_DOWN	DOWN

Table 5. Common Anchor Area (CAA) Cross Reference

Name	Hex Offset	Hex Value	Level
CEECAA	0		1
CEECAA_CANCELSAFE	338	08	4
CEECAA_CTOC	34C		3
CEECAA_DANCHOR	348		3
CEECAA_DCRENT	344		3
CEECAA_ENQ_WAIT_INTERRUPTABLE	2AF	02	4
CEECAA_EXTERNAL	0		2
CEECAA_FORDBG	398		3
CEECAA_FRZ_UNSAFE	338	02	4
CEECAA_HCOM_REG14	360		3
CEECAA_HCOM_REG7	360		4
CEECAA_LER4	388		3
CEECAA_LER5	3BC		3
CEECAA_LER5N1	3B4		3
CEECAA_PM	2B1		3
CEECAA_SA_RESTART	338	40	4
CEECAA_SIGNAL_STATUS	35C		3
CEECAA_SIGPUTBACK	338	80	4
CEECAA_SIGRESYNCH	338	04	4
CEECAA_SIGSAFE	338	10	4
CEECAA_SIGSCTR	334		3
CEECAA_SIGSFLG	338		3
CEECAA_STACKDIRECTION	39D		3

Table 5. Common Anchor Area (CAA) Cross Reference (continued)

Name	Hex Offset	Hex Value	Level
CEECAA_STACKFLOOR	364		3
CEECAA_TCASRV	258		3
CEECAA_TCASRV_ATTENTION	274		4
CEECAA_TCASRV_DELETE	26C		4
CEECAA_TCASRV_EXCEPTION	270		4
CEECAA_TCASRV_FREEMAIN	264		4
CEECAA_TCASRV_GETMAIN	260		4
CEECAA_TCASRV_LOAD	268		4
CEECAA_TCASRV_MESSAGE	278		4
CEECAA_TCASRV_USERWORD	258		4
CEECAA_TCASRV_WORKAREA	25C		4
CEECAA_THREAD_INITIAL	2AF	10	4
CEECAA_TRACE_ACTIVE	2AF	08	4
CEECAA_VECTOR	2AF	40	4
CEECAAAB_ABCC	3A8		3
CEECAAAB_ABCC_VALID	39C	20	4
CEECAAAB_CRC	3AC		3
CEECAAAB_CRC_VALID	39C	10	4
CEECAAAB_GR0	3A0		3
CEECAAAB_GR0_VALID	39C	80	4
CEECAAAB_GR15_VALID	39C	08	4
CEECAAAB_ICD1	3A4		3
CEECAAAB_ICD1_VALID	39C	40	4
CEECAAAB_STATUS	39C		3
CEECAAABCODE	2D0		4
CEECAAACALL	1C4		5
CEECAAAGTS	3B0		3
CEECAAALLOC	1A8		4
CEECAAATTN	120		3
CEECAABCALL	1C0		5
CEECAABIMODAL	2AF	80	4
CEECAABOS	8		3
CEECAACD	2D0		3
CEECAACEL_HPXV_B	3DC		3
CEECAACEL_HPXV_M	3E1		3
CEECAACEL_HPXV_L	3E5		3
CEECAACEL_HPXV_O	3E9		3
CEECAACELV	2B8		3
CEECAACGOTO	1DC		4
CEECAACICSRSN	354		3

Common Anchor Area (CAA)

Table 5. Common Anchor Area (CAA) Cross Reference (continued)

Name	Hex Offset	Hex Value	Level
CEECAACRENT	1F4		4
CEECAADBGINIT	1	20	4
CEECAADDSA	2E0		3
CEECAADIMA	1A4		3
CEECAADMC	2CC		3
CEECAADO	1C8		5
CEECAAEDB	2F0		3
CEECAAEDCHPXV	36C		3
CEECAAEDCV	210		4
CEECAAENTRY	1B0		4
CEECAAEOS	C		3
CEECAAERR	2D8		3
CEECAAESS	314		3
CEECAAEXIT	1B4		4
CEECAAEYEPTR	2F8		3
CEECAAFLAG0	0		3
CEECAAFLAG1	30C		3
CEECAAFLAG2	2AF		3
CEECAAFOR1	370		3
CEECAAFOR2	374		3
CEECAAGETFN	384		3
CEECAAGETLS	2B4		3
CEECAAGETS	2BC		3
CEECAAGETSX	2DC		3
CEECAAGETS1	300		3
CEECAAGOSMR	32C		4
CEECAAHERP	3B8		3
CEECAAHLLEXIT	15C		3
CEECAAHOOK	198		3
CEECAAHOOKS	1A8		3
CEECAAHPGETS	368		3
CEECAAHRDWR	2AD		3
CEECAAIFFALSE	1D0		5
CEECAAIFTRUE	1CC		5
CEECAALABEL	1BC		5
CEECAALANGP	2		3
CEECAALBOS	2C0		3
CEECAALEOS	2C4		3
CEECAALEOV	330		3
CEECAALESS	318		3

Table 5. Common Anchor Area (CAA) Cross Reference (continued)

Name	Hex Offset	Hex Value	Level
CEECAALEVEL	2B0		3
CEECAALNAB	2C8		3
CEECAALWS	280		3
CEECAAMEMBER_AREA	1F0		3
CEECAAMEMBR	358		3
CEECAAMEXIT	1B8		4
CEECAAOGETLS	320		3
CEECAAOGETS	31C		3
CEECAAOGETSX	328		3
CEECAAOTHER	1D8		5
CEECAAPARTSUM	2E8		3
CEECAAPATHS	1BC		4
CEECAAPCB	2F4		3
CEECAAPICICB	324		3
CEECAAPRGCK	308		3
CEECAAPTR	2FC		3
CEECAARCB	350		3
CEECAARS	2D4		3
CEECAARSNCODE	2D4		4
CEECAARSVDH1	1E0		4
CEECAARSVDH2	1E4		4
CEECAARSVDH3	1E8		4
CEECAARSVDH4	1EC		4
CEECAASAVR	284		3
CEECAASBSYS	2AE		3
CEECAASECTSIZ	2E4		3
CEECAASHAB	304		3
CEECAASIGNG	394		3
CEECAASIGNGPTR	390		3
CEECAASORT	30C	80	4
CEECAASSEXPNT	2EC		3
CEECAASTATE	1AC		4
CEECAASYSTM	2AC		3
CEECAATHDID	33C		3
CEECAATHFN	2	08	4
CEECAATHREADHEAPID	378		3
CEECAATIP	2AF	20	4
CEECAATORC	44		3
CEECAATOVF	74		3
CEECAATURC	46		4

Table 5. Common Anchor Area (CAA) Cross Reference (continued)

Name	Hex Offset	Hex Value	Level
CEECAAUDHOOK	3C8		3
CEECAAUDHOOKSW	3D1		3
CEECAAURC	310		3
CEECAAUSTKBOS	3BC		3
CEECAAUSTKEOS	3C0		3
CEECAAWHEN	1D4		5
CEECAAXHDL	0	02	4

The fields are defined as follows:

CEECAAFLAG0
CAA flag bits; the bits are defined as follows:
0-5 Reserved
6 CEECAAXHDL — a flag used by the exception handler. If the flag is set to 1, the application requires immediate return/percolation to the system on any interrupt or exception handler event.
7 Reserved

CEECAALANGP
PL/I language compatibility flags external to Language Environment. The bits are defined as follows:
0-3 Reserved
4 CEECAATHFN — A flag set by PL/I to indicate a PL/I FINISH ON UNIT is active. If flag is set to 1, then NO PL/I FINISH ON UNIT is active.
5-7 Reserved

CEECAABOS
Start of the current storage segment. This field is initially set during thread initialization. It indicates the start of the current stack storage segment. It is altered when the current stack storage segment is changed.

CEECAAEOS
This field is used to determine if a stack overflow routine must be called when allocating storage from the user stack. Normally, the value of this field will represent the end of the current user stack segment. However, its value can also be zero to force the call of a stack overflow routine for every allocation of storage from the user stack. This field is used by function prologs that do not use FASTLINK linkage conventions.

CEECAATORC
Thread level return code. The thread level return code set by CEESRC callable service.

CEECAATOVF
Address of stack overflow routine. This routine is called when there is no space available in the current stack extension to allocate a new stack frame. The routine allocates a new stack extension, updates the CEECAABOS and CEECAAEOS fields in the CAA, and returns the DSA address in the stack extension.

CEECAAATTN
Address of the Language Environment attention handling routine. The

address of the Language Environment attention handling routine supports Language Environment's polling code convention for attention processing.

CEECAAHLLEXIT
Exit list control block address. Exit list control block address as passed back from the HLL user exit in the *A_exit* parameter. For more information, see *z/OS Language Environment Programming Guide*.

CEECAAHOOK
Hook code sequence. CEECAAHOOK contains the following code sequence:

```
ST   12,CEEDSARENT    Put return addr into DSA
BALR 12,0             Get addressability
L    12,CEECAADIMA-*(,12)  Get A(CEECAADIMADDR)
BALR 12,12            Go with 12 the base reg.
```

CEECAADIMA
DIM address. Address of the Debugger Interface Module (DIM)

CEECAAHOOKS
Hook area. This is the start of 18 fullword execute hooks. Language Environment initializes each fullword to X'0700',S(CEECAAUDHOOK). The hooks can be altered to support various debugger hook mechanisms such as the Debug Tool's EXecute hooks.

CEECAAALLOC
ALLOCATE description built hook.

CEECAASTATE
New statement begins hook.

CEECAAENTRY
Block entry hook.

CEECAAEXIT
Block exit hook.

CEECAAMEXIT
Multiple block exit hook.

CEECAAPATHS
PATH hook.

CEECAALABEL
At a label constant hook.

CEECAABCALL
Before CALL hook.

CEECAACALL
After CALL hook.

CEECAADO
DO block starting hook.

CEECAAIFTRUE
True part of IF hook.

CEECAAIFFALSE
False part of IF hook.

CEECAAWHEN
WHEN group starting hook.

CEECAAOTHER
OTHERWISE group hook.

CEECAAGOTO
GOTO hook for C hook.

CEECAARSVDH1
Reserved hook.

CEECAARSVDH2
Reserved hook.

CEECAARSVDH3
Reserved hook.

CEECAARSVDH4
Reserved hook.

CEECAACRENT
C or C++ writable static.

CEECAAEDCV
Pointer to the C/370 vector table.

CEECAA_TCASRV
TCA service routine vector, which contains the following fullword address pointers:
- CEECAA_TCASRV_USERWORD
- CEECAA_TCASRV_WORKAREA
- CEECAA_TCASRV_GETMAIN
- CEECAA_TCASRV_FREEMAIN
- CEECAA_TCASRV_LOAD
- CEECAA_TCASRV_DELETE
- CEECAA_TCASRV_EXCEPTION
- CEECAA_TCASRV_ATTENTION
- CEECAA_TCASRV_MESSAGE

CEECAALWS
Address of PL/I Language Working Space.

CEECAASAVR
Register save area.

CEECAASYSTM
Underlying operating system. The value indicates the operating system supporting the active program. The values are defined as follows:
0 Undefined—this value should never occur after initializing Language Environment
1 Unsupported
2 VM/ESA®
3 z/OS

CEECAAHRDWR
Underlying hardware. The value indicates the type of hardware on which the program is executing; the values are defined as follows:
0 Undefined—this value should never occur after initializing Language Environment
1 Unsupported
2 System/370, non-XA
3 System/370, XA
4 System/370, ESA

CEECAASBSYS

Underlying subsystem. The value indicates the subsystem, if any, on which the program is executing; the values are defined as follows:

0 Undefined—this value should never occur after initializing Language Environment
1 Unsupported
2 None—the program is not executing under a subsystem according to Language Environment
3 TSO
4 IMS
5 CICS

CEECAAFLAG2

CAA Flag 2. The bits are defined as follows:

0 Set if bimodal addressing
1 Set if vector hardware
2 Thread terminating
3 Initial thread
4 Library trace is active; the TRACE run-time option was set
5 Reserved
6 Thread is in an enqueue wait
7 Reserved

CEECAALEVEL

Language Environment level identifier. This contains a unique value that identifies each release of Language Environment. This number is incremented for each new release of Language Environment. Beginning with 10, the version and release numbers are the same as OS/390 version and release numbers. The values are defined as follows:

1 IBM SAA® AD/Cycle LE/370 V1 R1
2 IBM SAA AD/Cycle LE/370 V1 R2
3 IBM SAA AD/Cycle LE/370 V1 R3
4 IBM Language Environment for MVS & VM V1 R4
5 OS/390 Language Environment V1 R5
6 OS/390 Language Environment V1 R6
7 OS/390 Language Environment V1 R7
8 OS/390 Language Environment V1 R8
9 OS/390 Language Environment V1 R9
10 OS/390 Language Environment V2 R7
11 OS/390 Language Environment V2 R8
12 OS/390 Language Environment V2 R9
13 OS/390 Language Environment V2 R10
14 z/OS Language Environment V1 R2
15 z/OS Language Environment V1 R3
16 z/OS Language Environment V1 R4

CEECAA_PM

Program mask.

CEECAAGETLS

Address of stack overflow for library routines.

CEECAACELV

Address of the Language Environment library vector. This field is used to locate dynamically loaded Language Environment routines.

Common Anchor Area (CAA)

CEECAAGETS
Address of the Language Environment prolog stack overflow routine. The address of the Language Environment get stack storage routine is included for fast reference in prolog code.

CEECAALBOS
Start of the library stack storage segment. This field is initially set during thread initialization. It indicates the start of the library stack storage segment. It is altered when the library stack storage segment is changed.

CEECAALEOS
This field is used to determine if a stack overflow routine must be called when allocating storage from the library stack. Normally, the value of this field will represent the end of the current library stack segment. However, its value can also be zero to force the call of a stack overflow routine for every allocation of storage from the library stack. This field is used by function prologs that do not use FASTLINK linkage conventions.

CEECAALNAB
Next available library stack storage byte. This contains the address of the next available byte of storage on the library stack. It is modified when library stack storage is obtained or released.

CEECAADMC
Language Environment shunt routine address. Its value is initially set to zero during thread initialization. If it is nonzero, this is the address of a routine used in specialized exception processing. For more information, see *z/OS Language Environment Programming Guide*.

CEECAAACD
Most recent CAASHAB abend code.

CEECAAABCODE
Most recent abend completion CDE.

CEECAAARS
Most recent CAASHAB reason code.

CEECAAARSNCODE
Most recent abend reason code.

CEECAAERR
Address of the current CEECIB. After completion of initialization, this always points to a CEECIB. During exception processing, the current CEECIB contains information about the current exception being processed. Otherwise, it indicates no exception being processed.

CEECAAGETSX
Address of the user stack extender routine. This routine is called to extend the current DSA in the user stack. Its address is in the CEECAA for performance reasons.

CEECAADDSA
Address of the Language Environment dummy DSA. This address determines if a DSA is the dummy DSA, also known as the zeroth DSA.

CEECAASECTSIZ
Vector section size.

CEECAAPARTSUM
Vector partial sum number.

CEECAASSEXPNT
Log of the vector section size.

CEECAAEDB
Address of the Language Environment enclave data block. This field points to the encompassing EDB.

CEECAAPCB
Address of the Language Environment Process Control Block. This field points to the encompassing PCB.

CEECAAEYEPTR
Address of the CAA eye catcher. This field can be used for validation of the CAA.

CEECAAPTR
Address of the CAA. This field points to the CAA itself and can be used in validation of the CAA.

CEECAAGETS1
Non-DSA Stack overflow. This field is the address of a stack overflow routine which cannot guarantee that the current R13 is pointing at a DSA. R13 must point, at a minimum, point to a save area. For additional details, see "Obtain a DSA in User Stack with R13 Pointing to Save Area" on page 85.

CEECAASHAB
ABEND shunt routine. Its value is initially set to zero during thread initialization. If it is nonzero, this is the address of a routine used in specialized exception processing for ABENDs that are intercepted in the ESTAE exit. For more information, see *z/OS Language Environment Programming Guide*.

CEECAAPRGCK
Program interrupt code for CEECAADMC. If CEECAADMC is nonzero, and a program interrupt occurs, this field is set to the program interrupt code and control is passed to the address in CEECAAMDC. For more information, see *z/OS Language Environment Programming Guide*.

CEECAAFLAG1
CAA flag bits; the bits are defined as follows:
0 CEECAASORT; a call to DFSORT™ is active.
1-7 Reserved.

CEECAAURC
Thread level return code. This is the common place for members to set the return codes for sub-to-sub return code processing.

CEECAAESS
This field is used to determine if a stack overflow routine must be called when allocating storage from the user stack. Normally, the value of this field will represent the end of the current user stack segment. However, its value can also be zero to force the call of a stack overflow routine for every allocation of storage from the user stack. This field is used by function prologs that use FASTLINK linkage conventions.

CEECAALESS
This field is used to determine if a stack overflow routine must be called when allocating storage from the library stack. Normally, the value of this field will represent the end of the current library stack segment. However, its value can also be zero to force the call of a stack overflow routine for every

allocation of storage from the library stack. This field is used by function prologs that use FASTLINK linkage conventions.

CEECAAOGETS
Pointer to overflow user segment from FASTLINK.

CEECAAOGETLS
Pointer to overflow library segment from FASTLINK.

CEECAAPICICB
Address of preinit compatibility control block. This is provided in support of the PL/I preinitialization compatibility support.

CEECAAOGETSX
Pointer to user DSA exit from FASTLINK.

CEECAAGOSMR
Go Some More—Used CEEHTRAV multiple.

CEECAALEOV
Address of the Language Environment—z/OS UNIX System Services (z/OS UNIX) LIBVEC.

CEECAA_SIGSCTR
Signal Safe counter. When 0, an interrupt is allowed; when greater than 0, interrupts are temporarily inactive. Four types of interrupts can be blocked or allowed: signal interrupts, cancel interrupts, quiesce-terminate interrupts, and quiesce-freeze interrupts.

CEECAA_SIGSFLG
Signal Safe flags.

0 CEECAA_SIGPUTBACK — A signal was put back.
1 CEECAA_RESTART — indicates that a signal registered with the SA_RESTART flag interrupted the last kernel call and the signal catcher returned (that is, loopback is required to re-issue the kernel call).
2 Reserved.
3 CEECAA_SIGSAFE — Indicates that synchronous signals are safe to be delivered, regardless of where the interrupt occurred.
4 CEECAA_CANCELSAFE — Indicates that it is safe to unconditionally accept delivery of a synchronous cancel.
5 CEECAA_SIGRESYNC — Indicates that one or more synchronous signals may have been recently put back the last time a signal was resolicited while returning from library to user code.
6 CEECAA_FRZ_UNSAFE — Indicates that the thread is unsafe to be frozen.

CEECAATHDID
This CAA's POSIX thread identifier (8 bytes).

CEECAA_DCRENT
DCE's read/write static external anchor.

CEECAA_DANCHOR
DCE's per-thread anchor.

CEECAA_CTOC
TOC anchor for CRENT.

CEECAARCB
Address of RCB.

CEECAACICSRSN
CICS reason code for member language.

CEECAAMEMBR
Address of thread-level member list. An entry is reserved for each member known to Language Environment. There is one member list per thread. For details, see “Language Environment Member List and Event Handler” on page 74.

CEECAA_SIGNAL_STATUS
Signal status for terminating thread.

CEECAAFOR1
Reserved for Fortran.

CEECAAFOR2
Reserved for Fortran.

CEECAATHREADHEAPID
Pointer to thread heap ID.

CEECAASIGNGPTR
Pointer to the “signam” external variable.

CEECAASIGNG
Value of the sign of lgamma() function.

-1 Negative sign
0 Zero
+1 Positive sign

CEECAA_FORDBG
Pointer to AFHDBHIM — FORTRAN hook interface.

CEECAA_STATUS
Contains the following validity flags:

CEECAAAB_GR0_VALID
Indicates if the CEECAAAB_GR0 field contains valid data about the last abend.

CEECAAAB_ICD1_VALID
Indicates if the CEECAAAB_ICD1 field contains valid data about the last abend.

CEECAAAB_ABCC_VALID
Indicates if the CEECAAAB_ABCC field contains valid data about the last abend.

CEECAAAB_CRC_VALID
Indicates if the CEECAAAB_CRC field contains valid data about the last abend.

CEECAAAB_GR15_VALID
Indicates if the CEECAAAB_GR15 field contains valid data about the last abend.

CEECAAAB_GR0
Register 0 contents at the time of the ABEND. This is only valid if CEECAAAB_GR0_VALID bit is on.

CEECAAAB_ICD1
The eight bit interrupt code from SDWAICD1 field of the SDWA for the abend. This is only valid if CEECAAAB_ICD1_VALID bit is on.

Common Anchor Area (CAA)

CEECAAB_ABCC
The abend completion code, taken from SDWAABCC field of the SDWA for the shunted abend. This is only valid if CEECAAAB_ABCC_VALID bit is on.

CEECAAAB_CRC
Component reason code, or return code associated with the abend, taken from the SDWACRC field of the SDWA for the shunted abend. This is only valid if CEECAAAB_CRC_VALID bit is on.

CEECAAAGTS
A 4-byte pointer that contains the address of the entry point of the CEEVAGTS routine. CEEVAGTS supports the code that the C compiler generates in module prologs for DSA allocation.

CEECAA_LER5N1
Reserved.

CEECAAAHERP
Address of the CEEHERP routine.

CEECAAAUSTKBOS
Start of user stack segment.

CEECAAAUSTKEOS
End of user stack segment.

CEECAA_LER5
Reserved.

CEECAA_HCOM_REG14
The original register 14 value overlaid by a pointer to CEEOSIGR when the latest signal was put back.

CEECAA_HCOM_REG7
The original register 7 value overlaid by a pointer to CEEOSIGX when the latest signal was put back.

CEECAA_SA_RESTART
SA_RESTART loopback is required this time.

CEECAA_SIGRESYNCH
One or more synchronous signals may have been put back just prior to the last time a signal was resolicited while returning from library to user code.

CEECAA_STACKFLOOR
Lowest usable address in the XPLINK stack.

CEECAAHPGETS
XPLINK stack extension routine.

CEECAAEDCHPXV
C++ XPLINK libvec.

CEECAAGETFN
Address of the WSA swap routine.

CEECAA_STACKDIRECTION
Stack direction.

CEECAAUDHOOK
Hook swapping XPLINK.

CEECAAUDHOOKSW
Hook switch.

CEECAACEL_HPXV_B
Address of XPLINK vector for Base library.

CEECAACEL_HPXV_M
Address of XPLINK vector for Math library.

CEECAACEL_HPXV_L
Address of XPLINK vector for Locale library.

CEECAACEL_HPXV_O
Address of XPLINK vector for Open library.

Language Environment Enclave Data Block

Each enclave is represented by an enclave data block (EDB), which supports the program model. All enclave-related resources are provided in the EDB; it is generated during enclave initialization and deleted during enclave termination. Fields in the EDB should be used as described in other sections of this document. In particular, fields should not be modified and routine addresses should not be used as entry points, except as specified.

The following three tables show the format of the EDB.
- Table 6 shows the EDB field descriptions.
- Table 7 on page 57 shows the EDB constants.
- Table 8 on page 58 shows the EDB cross reference information.

Table 6. Enclave Data Block (EDB) Field Descriptions

Offsets		Type	Len	Name (Dim) (* = Reserved)	Description
Dec	Hex				
0	(0)	STRUCTURE	164	CEEEDB	EDB mapping
0	(0)	CHARACTER	164	CEEEDB_EXTERNAL	External portion
0	(0)	CHARACTER	8	CEEEDBEYE	Eyecatcher 'CEEEDB '
8	(8)	BITSTRING	4	CEEEDBFLAGS	Enclave information
8	(8)	BITSTRING	1	CEEEDBFLAG1	EDB Flags
		1...		CEEEDBMAINI	Main program initialized
		.1..		CEEEDB_INITIAL_AMODE	
		..1.		CEEEDBACTIV	Environment is now active
		...1		CEEEDBTIP	Termination In Progress
		.... 1...		CEEEDBPICI	Pre-Init Compat. is active
		.... .1..		CEEEDB_POSIX	z/OS UNIX is active and run-time option POSIX(ON) is active
		.... ..1.		CEEEDBMULTITHREAD	Multithreading environment
		1		CEEEDB_OMVS_DUBBED	z/OS UNIX is dubbed
9	(9)	BITSTRING	1	CEEEDBIPM	Initial Program Mask
10	(A)	BITSTRING	1	CEEEDBPM	Current Program Mask

Enclave Data Block (EDB)

Table 6. Enclave Data Block (EDB) Field Descriptions (continued)

Offsets		Type	Len	Name (Dim) (* = Reserved)	Description
Dec	Hex				
11	(B)	UNSIGNED	1	CEEEDB_CREATOR_ID	Enclave creator ID
12	(C)	ADDRESS	4	CEEEDBMEMBR	A(member list body)
16	(10)	ADDRESS	4	CEEEDBOPTCB	A(options control block)
20	(14)	SIGNED	4	CEEEDBURC	User Return Code
24	(18)	SIGNED	4	CEEEDBRSNCD	CEL Reason Code
28	(1C)	ADDRESS	4	CEEEDBDBGEH	Addr of debugger event handler
32	(20)	SIGNED	4	CEEEDBANHP	CEL Anywhere Heap ID
36	(24)	SIGNED	4	CEEEDBBEHP	CEL Below Heap ID
40	(28)	ADDRESS	4	CEEEDBCELV	Addr of CEL LIBVEC
44	(2C)	ADDRESS	4	CEEEDBPCB	A(PCB)
48	(30)	ADDRESS	4	CEEEDBELIST	Exit list from HLL user exit
52	(34)	ADDRESS	4	CEEEDB_PL_ASTRPTR	A(appl parm str)
56	(38)	ADDRESS	4	CEEEDBDEFPLPTR	A(main parm list)
60	(3C)	SIGNED	4	CEEEDBCXIT_PAGE	Cxit_page value for user exit
64	(40)	CHARACTER	4	CEEEDB_DEBUG_TERMID	Debugger terminal ID
68	(44)	ADDRESS	4	CEEEDBPARENT	Addr of the parent enclave CAA
When the enclave is created, its creator (or parent) needs to provide: 1. Enclave termination routine (CEEEDB_TERM). 2. Information where to return to when the enclave terminates along with the environment which is to be restored. CEEEDB_R13_PARENT is a convenient way to provide the return information. It is a pointer to the DSA which contains all the registers of the enclave's parent.					
72	(48)	ADDRESS	4	CEEEDB_R13_PARENT	A(DSA of enclave creator)
76	(4C)	CHARACTER	64	CEEEDB_LER3	Lang Env V1R3M0 externals
76	(4C)	CHARACTER	8	*	Reserved from Lang Env V1R2M0
84	(54)	ADDRESS	4	CEEEDBLEOV	Addr of z/OS UNIX LIBVEC
88	(58)	ADDRESS	4	CEEEDBENVAR	Address of environment variable array. This is the case only when a POSIX-C prog is not part of the application. WARNING! this field should not be updated by other than CEL or C initialization.

Table 6. Enclave Data Block (EDB) Field Descriptions (continued)

Offsets		Type	Len	Name (Dim) (* = Reserved)	Description
Dec	Hex				
92	(5C)	ADDRESS	4	CEEEDBENVIRON	Address of environment variable anchor. In POSIX-C, it is the environ variable, otherwise it points to the CEEEDBENVAR.
96	(60)	ADDRESS	4	CEEEDB_CEEOSIGR@	CEEOSIGR address
100	(64)	ADDRESS	4	CEEEDBOTRB	Pointer to trace table
The following five fields are used by the CEEXGPES (get permanent enclave storage) macro. This macro allows member languages to quickly allocate storage that is freed by CEL only after member enclave termination.					
104	(68)	ADDRESS	4	CEEEDBPSA31	Address and length of..
108	(6C)	SIGNED	4	CEEEDBPSL31	..preallocated 31 storage
112	(70)	ADDRESS	4	CEEEDBPSA24	Address and length of..
116	(74)	SIGNED	4	CEEEDBPSL24	..preallocated 24 storage
120	(78)	ADDRESS	4	CEEEDBPSRA	Addr of overflow routine
124	(7C)	ADDRESS	4	CEEEDB_CAACHAIN@	Pointer to IPT's CAA
128	(80)	BITSTRING	4	CEEEDBFLAGS1	Additional external
128	(80)	BITSTRING	1	CEEEDBFLAG1A	Flags
		1...		CEEEDB_SIGENABLED	Signals enabled
		.1..		CEEEDB_MVS_BATCH	Running z/OS batch
		..1.		CEEEDB_TERM_DNFR	Do not free heap or delete programs during termination of the enclave.
		...1		CEEEDB_TERM_NOEDSA	No scan for exit DSAs at enclave termination.
		.... 1...		CEEEDB_CICS_OPEN_PROGRAM	1= Program runs only on an OTE TCB and can use Open C functions 0= Program may run on OTE or QR TCB
		.... .1..		CEEEDB_MAIN_HP	Main uses XP linkage
		.... ..1.		CEEEDB_HPLINK	XPLINK is being used
		1		CEEEDB_EVNTDEST	Running destructors
129	(81)	BITSTRING	1	CEEEDBFLAG1B	Flags

Enclave Data Block (EDB)

Table 6. Enclave Data Block (EDB) Field Descriptions (continued)

Offsets		Type	Len	Name (Dim) (* = Reserved)	Description
Dec	Hex				
		1...		CEEEDB_2_ENV_TABLES	1= Lang Env maintains two identical tables of environment variables, one in EBCDIC and one in ASCII 0= Only an EBCDIC table is maintained
		.1..		CEEEDB_CICS_REUSE_ENCLAVE	1= Program is part of a reusable enclave 0= Program is not part of a reusable enclave
		..1.		CEEEDB_CICS_RE_DIRTY	1= Reusable enclave has been corrupted and is no longer reusable by Lang Env. CICS requested to terminate enclave 0= Enclave is clean and still reusable
		...1		CEEEDB_EXEC_EXIT	1= User exit routine for exec() processing is running 0= User exit routine is not running
		 1111		*	Reserved
130	(82)	CHARACTER	2	*	Reserved
132	(84)	ADDRESS	4	CEEEDB_CEEOSGR1@	CEEOSIGR end address
136	(88)	ADDRESS	4	CEEEDB_XPL_NODLL_FDS	Ptr to chain of XPLINK compat descriptors representing NODLL func ptrs
140	(8C)	CHARACTER	8	CEEEDB_LER4	
140	(8C)	BITSTRING	4	CEEEDBMEMBERCOMPAT	
Member compatibility flags					
140	(8C)	BITSTRING	1	CEEEDBMEMBERCOMPAT1	
		1...		CEEEDBPLITASKING	PL/I tasking
		.111 1111		*	Reserved
141	(8D)	BITSTRING	1	CEEEDBMEMBERCOMPAT2	Reserved
142	(8E)	BITSTRING	1	CEEEDBMEMBERCOMPAT3	Reserved
143	(8F)	BITSTRING	1	CEEEDBMEMBERCOMPAT4	Reserved
144	(90)	SIGNED	4	CEEEDBTHREADSACTIVE	Threads active
148	(94)	CHARACTER	8	CEEEDB_LER5	
148	(94)	SIGNED	4	CEEEDBCURMSGFILEDCBPTR	DCB ptr

Table 6. Enclave Data Block (EDB) Field Descriptions (continued)

Offsets		Type	Len	Name (Dim) (* = Reserved)	Description
Dec	Hex				
152	(98)	ADDRESS	4	CEEEDB_CEEINT_INPUT_R1	
When the request block boundary is crossed, a new enclave is created and request block info must be maintained. This is to maintain compatibility with the VS COBOL II definition of a run unit. The following two fields allow support for implicit enclave create.					
156	(9C)	ADDRESS	4	CEEEDB_LAST_RBADDR	A(Last request block)
160	(A0)	SIGNED	4	CEEEDB_LAST_RBCNT	Index of last request blk
164	(A4)	SIGNED	4	CEEEDB_ENVLENGTH	Length of envar array of pointers
168	(A8)	ADDRESS	4	CEEEDBENVAR_A	Address of alternate environment variable array
172	(AC)	ADDRESS	4	CEEEDBENVIRON_A	Address of alternate environment variable anchor

Table 7. Enclave Data Block (EDB) Constants

Len	Type	Value	Name	Description
Declare constants to identify creator of an enclave				
1	DECIMAL	1	CEEEDB_CREATOR_BINIT	batch (BINIT)
1	DECIMAL	2	CEEEDB_CREATOR_RINI	CICS (RINI)
1	DECIMAL	3	CEEEDB_CREATOR_BCREN	cr_enc(BCREN)
1	DECIMAL	4	CEEEDB_CREATOR_PIPI_MAIN	preinit main
1	DECIMAL	5	CEEEDB_CREATOR_PIPI_SUBR	preinit subr
1	DECIMAL	6	CEEEDB_CREATOR_IMPLICIT	LINK SVC
1	DECIMAL	7	CEEEDB_CREATOR_EXEC	POSIX exec()
1	DECIMAL	0	CEEEDBTRMRSN_NORMAL_RETURN	
1	DECIMAL	1	CEEEDBTRMRSN_CEETREN_EXIT	
1	DECIMAL	2	CEEEDBTRMRSN_CEETREC_EXIT	
1	DECIMAL	3	CEEEDBTRMRSN_CEEEXIT_EXIT	_exit()
1	DECIMAL	4	CEEEDBTRMRSN_UNHANDLED_COND	
1	DECIMAL	5	CEEEDBTRMRSN_PTHREAD_EXIT	
1	DECIMAL	6	CEEEDBTRMRSN_QUIESCE	
1	DECIMAL	7	CEEEDBTRMRSN_CEEEXIT_EXEC	exec
1	DECIMAL	1	CEEEDB_PIN_UNSET	
1	DECIMAL	2	CEEEDB_PIN_UNAVAIL	
1	DECIMAL	3	CEEEDB_PIN_SET	
Maximum member ID and maximum member number both relate to the number of CEL members currently supported. The range of member ID values is from 0 to max_member_id.				
4	DECIMAL	17	CEEEDB_MAXMEMID	max member ID
4	DECIMAL	18	CEEEDB_MAXMEMNUM	max member number

Enclave Data Block (EDB)

Table 8. Enclave Data Block (EDB) Cross Reference

Name	Hex Offset	Hex Value	Level
CEEEDB	0		1
CEEEDB_CAACHAIN@	7C		4
CEEEDB_CEEINT_INPUT_R1	98		4
CEEEDB_CEEOSIGR@	60		4
CEEEDB_CEEOSGR1@	84		4
CEEEDB_CICS_OPEN_PROGRAM	80		6
CEEEDB_CREATOR_ID	B		4
CEEEDB_DEBUG_TERMID	40		3
CEEEDB_ENVLENGTH	A4		3
CEEEDB_EVNTDEST	80	01	6
CEEEDB_EXTERNAL	0		2
CEEEDB_HPLINK	80		6
CEEEDB_INITIAL_AMODE	8	40	5
CEEEDB_LAST_RBADDR	9C		3
CEEEDB_LAST_RBCNT	A0		3
CEEEDB_LER3	4C		3
CEEEDB_LER4	8C		3
CEEEDB_LER5	94		3
CEEEDB_MAIN_HP	80		6
CEEEDB_MVS_BATCH	80	40	6
CEEEDB_OMVS_DUBBED	8	01	5
CEEEDB_PL_ASTRPTR	34		3
CEEEDB_POSIX	8	04	5
CEEEDB_R13_PARENT	48		3
CEEEDB_SIGENABLED	80	80	6
CEEEDB_TERM_DNFR	80	20	6
CEEEDB_XPL_NODLL_FDS	88		4
CEEEDBACTIV	8	20	5
CEEEDBANHP	20		3
CEEEDBBEHP	24		3
CEEEDBCELV	28		3
CEEEDBCURMSGFILEDCBPTR	94		4
CEEEDBCXIT_PAGE	3C		3
CEEEDBDBGEH	1C		3
CEEEDBDEFPLPTR	38		3
CEEEDBELIST	30		3
CEEEDBENVAR	58		4
CEEEDBENVAR_A	168		3
CEEEDBENVIRON	5C		4
CEEEDBENVIRON_A	172		3

Table 8. Enclave Data Block (EDB) Cross Reference (continued)

Name	Hex Offset	Hex Value	Level
CEEEDBEYE	0		3
CEEEDBFLAGS	8		3
CEEEDBFLAGS1	80		4
CEEEDBFLAG1	8		4
CEEEDBFLAG1A	80		5
CEEEDBIPM	9		4
CEEEDBLEOV	54		4
CEEEDBMAINI	8	80	5
CEEEDBMEMBERCOMPAT	8C		4
CEEEDBMEMBERCOMPAT1	8C		5
CEEEDBMEMBERCOMPAT2	8D		5
CEEEDBMEMBERCOMPAT3	8E		5
CEEEDBMEMBERCOMPAT4	8F		5
CEEEDBMEMBR	C		3
CEEEDBMULTITHREAD	8	02	5
CEEEDBOPTCB	10		3
CEEEDBOTRB	64		4
CEEEDBPARENT	44		3
CEEEDBPCB	2C		3
CEEEDBPICI	8	08	5
CEEEDBPLITASKING	8C	80	6
CEEEDBPM	A		4
CEEEDBPSA24	70		4
CEEEDBPSA31	68		4
CEEEDBPSL24	74		4
CEEEDBPSL31	6C		4
CEEEDBPSRA	78		4
CEEEDBRSNCD	18		3
CEEEDBTHREADSACTIVE	90		4
CEEEDBTIP	8	10	5
CEEEDBURC	14		3

The fields are defined as follows:

CEEEDBFLAG1

CEEEDB flags. The bits in this flag byte are defined as follows:

0 CEEEDBMAINI

This bit indicates that a main program has been initialized within the current enclave. Each member language must ensure that a main program written in that language sets this bit when it is initialized.

1 CEEEDB_INITIAL_AMODE

This bit indicates the amode upon entry into the Language Environment initialization routine. ON indicates a 31-bit entry; OFF indicates a 24-bit entry.

2 CEEEDBACTIV

This bit indicates the environment is currently active. A preinitialized environment has this bit initially set to zero.

3 CEEEDBTIP

This bit indicates termination is in progress.

4 CEEEDBPICI

Preinitialization compatibility is active.

5 CEEEDB_POSIX

POSIX(ON) was specified and z/OS UNIX is available.

6 CEEEDBMULTITHREAD

Multithread environment is active.

7 CEEEDB_OMVS_DUBBED

z/OS UNIX is dubbed.

CEEEDBIPM
The initial program mask. This is the result of ORing all of the member language's program mask requirements. Language Environment sets the program mask to this value during initialization.

CEEEDBPM
The current program mask setting.

CEEEDB_CREATOR_ID
ID of enclave creator. The values defined in this byte are as follows:

1 CEEEDB_CREATOR_BINIT

This value indicates this is the first enclave in the process created under batch.

2 CEEEDB_CREATOR_RINI

This value indicates the enclave was created under CICS.

3 CEEEDB_CREATOR_BCREN

This value indicates the enclave was created with the callable service to create enclaves.

4 CEEEDB_CREATOR_PIPI_MAIN

This value indicates the enclave was created with preinitialization services for the main routine.

5 CEEEDB_CREATOR_PIPI_SUBR

This value indicates the enclave was created with preinitialization services for subroutines.

6 CEEEDB_CREATOR_IMPLICIT

This value indicates the enclave was created implicitly with host system services, such as the LINK SVC.

7 CEEEDB_CREATOR_EXEC

This value indicates the enclave was created and invoked from the kernel as a result of an `exec()`.

CEEEDBMEMBR
Address of a list of member entries. An entry is reserved for each member known to Language Environment. There is one member list per enclave. For details, see “Language Environment Member List and Event Handler” on page 74.

CEEEDBOPTCB
Address of the options control block. Enclave initialization processes the run-time options and generates the options control block, CEEOCB. There is one CEEOCB per enclave. This pointer makes the run-time options easily available to all members.

CEEEDBURC
User return code. This field contains the return code generated and stored here by the user program. It is augmented by the Language Environment reason code and returned at enclave termination.

CEEEDBRSNCD
Language Environment reason code. The value indicates the reason for Language Environment termination. It augments the return code, and is returned separately at enclave termination.

CEEEDBDBGEH
Debugger event handler. This field holds the address of the debugger event handler, which is loaded by Language Environment. For additional information, see Chapter 9, “Debugging and Performance Analysis” on page 315.

CEEEDBANHP
Language Environment Anywhere heap ID. This field holds the identification for Language Environment’s defined heap storage that is typically allocated above the 16M line. For more information, see “Dynamic Storage (Heap) Services” on page 193.

CEEEDBBEHP
Language Environment below heap ID. This field holds the identification for Language Environment’s defined heap storage that is always allocated below the 16M line; see “Dynamic Storage (Heap) Services” on page 193 for more information.

CEEEDBCELV
Address of Language Environment LIBVEC. This field holds the address of Language Environment’s library vector table (LIBVEC). Access to Language Environment routines is through this vector table.

CEEEDBPCB
Address of the process control block. This field holds the address of Language Environment’s process control block (PCB). This allows access to process-level resources and information.

CEEEDBELIST
Address of exit list from the HLL user exit. The address of a list of user exits provided by the user with the HLL user exit. Language Environment copies the value to the EDB.

CEEEDB_PL_ASTRPTR
Address of the user parameter list varying string pointer.

CEEEDBDEFPLPTR
The default pointer that is the inbound parameter list.

CEEEDBCEXIT_PAGE
Cxit_page value for user exit parameter list.

CEEEDB_DEBUG_TERMID
Debugger terminal ID under CICS.

CEEEDBPARENT
Address of parent enclave CAA. When the enclave is created, its creator (or parent) need to provide:
1. Enclave termination routine (CEEEDB_TERM).
2. Information where to return to when the enclave terminates along with the environment which is to be restored.

CEEEDB_R13_PARENT
Address of DSA enclave creator. CEEEDB_R13_PARENT is a convenient way to provide return information. It is a pointer to the DSA which contains all the registers of the enclave's parent.

CEEEDB_LER3
External section.

CEEEDBLEOV
Address of the LIBVEC for z/OS UNIX support.

CEEEDBENVAR
Address of the environment variable array.

CEEEDBENVAR_A
Address of the alternate environment variable array.

CEEEDBENVIRON
Address of the environment variable anchor.

CEEEDBENVIRON_A
Address of the alternate environment variable anchor.

CEEEDB_CEEOSIGR@
Address of the CEEOSIGR routine.

CEEEDBOTRB
Address of the in-core wrapping trace table.

CEEEDBPSA31
Address and preallocated 31 storage.

CEEEDBPSL31
Length of preallocated 31 storage.

CEEEDBPSA24
Address of preallocated 24 storage.

CEEEDBPSL24
Length of preallocated 24 storage.

CEEEDBPSRA
Address of overflow routine.

CEEEDBFLAG1A
Additional EDB flags, as follows:

0 CEEEDB_SIGENABLED

Signal processing enabled.

1 CEEEDB_MVS_BATCH

Running z/OS batch first enclave.

2 CEEEDB_TERM_DNFR

Do not free heap or delete programs at enclave termination.

3 CEEEDB_ENVTDEST

Running destructors.

4-7 Reserved

CEEEDB_CICS_OPEN_PROGRAM

0 Program may run on OTE or QR TCB.

1 Program runs only on an OTE TCB and can use Open C functions.

CEEEDB_MAIN_HP

Main uses XPLINK linkage.

CEEEDB_HPLINK

XPLINK is being used.

CEEEDB_CEEOSGR1@

CEEOSIGR and address.

CEEEDB_XPL_NODLL_FDS

Pointer to a chain of XPLINK compatibility descriptors representing NODLL function pointers.

CEEEDB_ENVLENGTH

Length to envar array of pointers.

Language Environment Process Control Block

Each process is represented by a Process Control Block (PCB). All process resources are anchored, provided for, or can be obtained through the PCB. The PCB is generated during process initialization and deleted during process termination. Fields in the PCB should be used as described in other sections of this document.

The following three tables show the format of the PCB.

- Table 9 shows the PCB field descriptions.
- Table 10 on page 65 shows the PCB constants.
- Table 11 on page 66 shows the PCB cross reference information.

Table 9. Process Control Block (PCB) Field Descriptions

Offsets		Type	Len	Name (* = Reserved)	Description
Dec	Hex				
0	(0)	STRUCTURE	76	CEEPCB	PCB mapping
0	(0)	CHARACTER	76	CEEPCB_EXTERNAL	External portion
0	(0)	CHARACTER	8	CEEPCBEYE	Eyecatcher 'CEEPCB '
8	(8)	BITSTRING	1	CEEPCBSYSTM	Underlying Operating System
9	(9)	BITSTRING	1	CEEPCBHRDWR	Underlying Hardware
10	(A)	BITSTRING	1	CEEPCBSBSYS	Underlying Subsystem
11	(B)	BITSTRING	1	CEEPCBFLAG2	

Process Control Block (PCB)

Table 9. Process Control Block (PCB) Field Descriptions (continued)

Offsets		Type	Len	Name (* = Reserved)	Description
Dec	Hex				
		1...		CEEPCBBIMODAL	Bimodal addressing is avail.
		.1..		CEEPCB_LVFORM	LIBVEC format 1=stat./0=dynam
		..1.		CEEPCB_VECTOR	Vector hardware available
		...1		CEEPCB_CL24	CEL Libvec AMODE24 is built
		.... 1...		CEEPCB_OMVS	z/OS UNIX is up and available
		.... .1..		CEEPCB_RTLS	RTLS(ON) is in effect
		.... ..1.		CEEPCB_PICI	PICI environment
		1		CEEPCB_REUSE	This CCIS process contains a reusable enclave environment
12	(C)	ADDRESS	4	CEEPCBDBGEH	A(debug event handler)
16	(10)	CHARACTER	8	CEEPCBDBGRSVD	Reserved for debugger
24	(18)	ADDRESS	4	CEEPCBDMEMBR	A(process member list)
28	(1C)	ADDRESS	4	CEEPCB_ZLOD	A(process load routine)
32	(20)	ADDRESS	4	CEEPCB_ZDEL	A(process delete routine)
36	(24)	ADDRESS	4	CEEPCB_ZGETST	A(process get storage rtn)
40	(28)	ADDRESS	4	CEEPCB_ZFREEST	A(process free storage rtn)
44	(2C)	ADDRESS	4	CEEPCB_LVTL	Address of a Lang Env library table that contains info about Lang Env libvecs, in order to determine which transfer vector should be used to access a library routine and be signal safed.
48	(30)	ADDRESS	4	CEEPCBRCB	Address of the RCB
52	(34)	ADDRESS	4	CEEPCB_SYSEIB	A(CICS System EIB)
The following three fields are used by the CEEXGPPS (get permanent process storage) macro. This macro allows the member languages to quickly allocate storage at the process level that is freed only by CEL after member process termination.					
56	(38)	SIGNED	4	CEEPCBPSL	Length of perm process stg
60	(3C)	ADDRESS	4	CEEPCBPSA	Addr of perm process stg
64	(40)	ADDRESS	4	CEEPCBPSRA	Perm process stg overflow routine address
68	(44)	BITSTRING	4	CEEPCB_OMVS_LEVEL	z/OS UNIX release level (Multiple bits may be set)
		1...		*	Reserved

Table 9. Process Control Block (PCB) Field Descriptions (continued)

Offsets		Type	Len	Name (* = Reserved)	Description
Dec	Hex				
		.1..		CEEPCB_OMVS_1120	HOM1120 functions are present.
		..1.		CEEPCB_OMVS_1130	HOM1130 functions are present.
68	(44)	BITSTRING	3	*	Reserved
72	(48)	ADDRESS	4	CEEPCB_CHAIN	Pointer to next PCB on PICI environment chain
76	(4C)	ADDRESS	4	CEEPCB_VSSFE	Address of the stack segment free routine
80	(50)	ADDRESS	4	CEEPCBPRFEH	Address of profile event handler
84	(54)	BITSTRING	1	CEEPCBFLAG6	Additional PCB flags
		1...	4	CEEPCB_ESAME	ESAME supported
		.111 1111		*	Reserved
85	(55)	CHARACTER	3	CEEPCB_RSRVED	Reserved
88	(58)	ADDRESS	4	CEEPCB_QFEXIT	pthread quiesce exit routine address

Table 10. Process Control Block (PCB) Constants

Len	Type	Value	Name	Description
Constants				
4	DECIMAL	16384	CEEPCB_IS_SIZE	Init dummy stk size
4	DECIMAL	2048	CEEPCB_LIS_SIZE	Init dummy lib size
CAUTION: CEEPCB_IS_SIZE and CEEPCB_LIS_SIZE must be multiple of doubleword size.				
4	DECIMAL	8	CEEPCB_MAXLVTNUM	Maximum library transfer vector tables in Lang Env
Declare constants for operating system, hardware, and subsystem CEEPCBSYSTM, CEEPCBHRDWR, CEEPCBSYS				
1	DECIMAL	0	CEEPCBSYUND	Undefined
1	DECIMAL	1	CEEPCBSYUNS	Unsupported
1	DECIMAL	2	CEEPCBSYVM	VM
1	DECIMAL	3	CEEPCBSYMVS	z/OS Underlying Hardware
1	DECIMAL	0	CEEPCBHWUND	Undefined
1	DECIMAL	1	CEEPCBHWUNS	Unsupported
1	DECIMAL	2	CEEPCBHW370	System/370 non-X
1	DECIMAL	3	CEEPCBHWXA	System/370 XA
1	DECIMAL	4	CEEPCBHWESA	System/370 ESA Underlying Subsystem
1	DECIMAL	0	CEEPCBSSUND	Undefined
1	DECIMAL	1	CEEPCBSSUNS	Unsupported
1	DECIMAL	2	CEEPCBSSNON	No subsystem

Process Control Block (PCB)

Table 10. Process Control Block (PCB) Constants (continued)

Len	Type	Value	Name	Description
1	DECIMAL	3	CEEPCBSSTSO	TSO
1	DECIMAL	5	CEEPCBSSCIC	CICS
Declare constants describing state of process				
1	DECIMAL	0	CEEPCBSTATE_INIT	Process init
1	DECIMAL	1	CEEPCBSTATE_TERM	Process term
1	DECIMAL	2	CEEPCBSTATE_ACTIVE	Process active

Table 11. Process Control Block (PCB) Cross Reference

Name	Hex Offset	Hex Value	Level
CEEPCB	0		1
CEEPCB_CHAIN	48		3
CEEPCB_CL24	B	10	4
CEEPCB_ESAME	54	80	4
CEEPCB_EXTERNAL	0		2
CEEPCB_LVFORM	B	40	4
CEEPCB_LVTL	2C		3
CEEPCB_OMVS	B	08	4
CEEPCB_OMVS_LEVEL	44		3
CEEPCB_OMVS_1120	44	40	4
CEEPCB_OMVS_1130	44	20	4
CEEPCB_PICI	B	02	4
CEEPCB_QFEXIT	58		3
CEEPCB_REUSE	B	01	4
CEEPCB_RTLS	B	04	4
CEEPCB_SYSEIB	34		3
CEEPCB_VECTOR	B	20	4
CEEPCB_VSSFE	4C		3
CEEPCB_ZDEL	20		3
CEEPCB_ZFREEST	28		3
CEEPCB_ZGETST	24		3
CEEPCB_ZLOD	1C		3
CEEPCBBIMODAL	B	80	4
CEEPCBDBGEH	C		3
CEEPCBDBGRSVD	10		3
CEEPCBDMEMBR	18		3
CEEPCBEYE	0		3
CEEPCBFLAG2	B		3
CEEPCBFLAG6	54		3
CEEPCBHRDWR	9		3
CEEPCBPRFEH	50		3

Table 11. Process Control Block (PCB) Cross Reference (continued)

Name	Hex Offset	Hex Value	Level
CEEPCBPSA	3C		3
CEEPCBPSL	38		3
CEEPCBPSRA	40		3
CEEPCBRCB	30		3
CEEPCBSBSYS	A		3
CEEPCBSYSTM	8		3

The fields are defined as follows:

CEEPCBEYE
8-character eyecatcher 'CEEPCB'.

CEEPCBSYSTM
Underlying operating system. The value indicates the operating system supporting the active program. The values are defined as follows:

0 Undefined — this value should never occur after initializing Language Environment
1 Unsupported
2 VM/ESA
3 z/OS

CEEPCBHRDWR
Underlying hardware The value indicates the type of hardware on which the program is executing; the values are defined as follows:

0 Undefined — this value should never occur after initializing Language Environment
1 Unsupported
2 System/370, non-XA
3 System/370, XA
4 System/370, ESA

CEEPCBSBSYS
Underlying subsystem The value indicates the subsystem, if any, on which the program is executing; the values are defined as follows:

0 Undefined — this value should never occur after initializing Language Environment
1 Unsupported
2 None — the program is not executing under a subsystem according to Language Environment
3 TSO
5 CICS

CEEPCBFLAG2
PCB flag bits; the bits are defined as follows:

0 CEEPCBBIMODAL

When 1, this indicates the hardware is capable of bimodal addressing

1 CEEPCB_LVFORM

Reserved

2 CEEPCB_VECTOR

When 1, the vector facility is available on the hardware

3 CEEPCB_CL24

LIBVEC for AMODE24 is available

4 CEEPCB_OMVS

z/OS UNIX is up and available

5 CEEPCB_RTLS

RTLS(ON) is in effect

6 CEEPCB_PICI

PICI environment is in effect

7 CEEPCB_REUSE

When 1, the CICS process contains a reusable enclave environment.

The CEEPCB_REUSE flag is required to indicate how Language Environment will getmain/freemain/load/delete resources upon requests in a reusable enclave environment. These resources must be freed explicitly during transaction termination.

CEEPCBDBGEH
Address of the debug tool event handler. This field holds the address of the debug tool event handler. When this field is zero, a debug tool has not been initialized.

CEEPCBDBGRSVD
Reserved for the debug tool's use. A doubleword that is reserved for the debug tool's use. It is zeroed by Language Environment process initialization.

CEEPCBMEMBR
Address of the process level member list. An entry is reserved for each member known to Language Environment. There is one member list per process. The process level member list has the same format as the enclave level member list. For details, see "Language Environment Member List and Event Handler" on page 74.

CEEPCB_ZLOD
Process level LOAD service. This is the address of a LOAD service. Routines loaded using this service persist across enclaves within this process. For details, see "Loading and Deleting Programs" on page 269.

CEEPCB_ZDEL
Process level DELETE service. This is the address of a DELETE service. Routines loaded using CEEPCB_ZLOD must be deleted using this service. For details, see "Loading and Deleting Programs" on page 269.

CEEPCB_ZGETST
Process level GETMAIN service. This is the address of a GETMAIN service. Storage obtained using this service persist across enclaves within this process.

CEEPCB_ZFREEST
Process level FREEMAIN service. This is the address of a FREEMAIN service. Storage obtained using CEEPCB_ZGETST must be freed using this service.

CEEPCB_LVTL
Address of a Language Environment library vector.

CEEPCBRCB
Address of the RCB.

CEEPCB_SYSEIB
Address of CICS system EIB.

CEEPCBPSL
Length of permanent process storage. This field is used by the CEEXGPPS (get permanent process storage) macro. This macro allows the member languages to quickly allocate storage at the process level that is freed only by Language Environment after member process termination.

CEEPCBPSA
Address of permanent process storage. This field is used by the CEEXGPPS (get permanent process storage) macro. This macro allows the member languages to quickly allocate storage at the process level that is freed only by Language Environment after member process termination.

CEEPCBPSRA
Permanent process storage overflow routine address table which contains information for all Language Environment LIBVECs that allow signal safing of Language Environment library for asynchronous signals. This field is used by the CEEXGPPS (get permanent process storage) macro. This macro allows the member languages to quickly allocate storage at the process level that is freed only by Language Environment after member process termination.

CEEPCB_OMVS_LEVEL
z/OS UNIX release level. The flags are as follows:
0 Reserved
1 HOM1120 functions are present
2 HOM1130 functions are present

CEEPCB_CHAIN
This field is used to run the PICI environment chain; it will be NULL when there is no next environment in the chain.

CEEPCB_VSSFE
Address of the stack segment free routine.

CEEPCBPRFEH
Address of the profile event handler

CEEPCBFLAG6
Additional PCB flag bits. The bits are defined as follows:
0 CEEPCB_ESAME
1 CEEPCB_ESAME hardware is available
1 - 7 Reserved

CEEPCB_QFEXIT
The address of the pthread quiesce exit routine to register for BPX1ENV. The values are:
0 In this environment, Language Environment is not providing any pthread quiesce exit routine to register via BPX1ENV.
1 The pthread quiesce exit routine has already been registered. Any member that calls BPX1ENV to register the pthread exit routine should set this field to 1.

Addr The address of the pthread quiesce exit routine that needs to be registered before the member uses BPX1PQG.

Language Environment Region Control Block

Regions are defined to effectively manage the resources for multiple processes, allowing, for instance, for the reuse of resources. Regions are:
- Internally defined
- Initialized once for each environment
- Not part of the program model
- Not visible to the HLL programmer

For example, under CICS, each CICS thread corresponds to a CEE process. Resources that are common to multiple CICS threads (or CEE processes) are managed at the region level. The region control block (RCB) provides access to region-level resources.

Although CICS is the only environment that has multiple processes in a single region, regions exist for all environments and region initialization/termination events are called in all environments, not just for CICS. For this reason, you should write all event handlers so that resources created during region initialization can be shared across multiple processes. Region and process initialization/termination events should be designed for the possibility of having multiple processes sharing a single Language Environment region in environments other than CICS.

There is one RCB per instance of a Language Environment environment and there is no link between RCB in separate Language Environment environments.

The following three tables show the format of the RCB.
- Table 12 shows the RCB field descriptions.
- Table 13 on page 71 shows the RCB constants.
- Table 14 on page 72 shows the RCB cross reference information.

Table 12. Region Control Block (RCB) Field Descriptions

Offsets		Type	Len	Name (Dim) (* = Reserved)	Description
Dec	Hex				
0	(0)	STRUCTURE	48	CEERCB	RCB mapping
0	(0)	CHARACTER	48	CEERCB_EXTERNAL	External portion
0	(0)	CHARACTER	8	CEERCBEYE	Eyecatcher ’CEERCB ’
8	(8)	BITSTRING	1	CEERCBSYSTM	Underlying Operating System
9	(9)	BITSTRING	1	CEERCBHRDWR	Underlying Hardware
10	(A)	BITSTRING	1	CEERCBSBSYS	Underlying Subsystem
11	(B)	BITSTRING	1	CEERCBFLAGS	
		1...		CEERCBBIMODAL	Bimodal addressing is avail.
		.1..		CEERCBLRR	ON= Lib Routine Retention is in effect
		..1.		CEERCBLRRTR	ON= Lib Routine Retention is being terminated
		...1 1111		*	Reserved
12	(C)	SIGNED	4	*	Reserved
16	(10)	SIGNED	4	*	Reserved

Table 12. Region Control Block (RCB) Field Descriptions (continued)

Offsets		Type	Len	Name (Dim) (* = Reserved)	Description
Dec	Hex				
20	(14)	ADDRESS	4	CEERCBDMEMBR	A(region member list)
24	(18)	ADDRESS	4	CEERCB_ZLOD	A(region load routine)
28	(1C)	ADDRESS	4	CEERCB_ZDEL	A(region delete routine)
32	(20)	ADDRESS	4	CEERCB_ZGETST	A(region get storage rtn)
36	(24)	ADDRESS	4	CEERCB_ZFREEST	A(region free storage rtn)
40	(28)	SIGNED	4	CEERCB_VERSION_ID	Ver., Rel., and Mod. of Language Environment
44	(2C)	ADDRESS	4	CEERCB_PCBCHAIN	Head of the PICI environment chain
48	(30)	SIGNED	4	CEERCB_REUSE_STATE	Run-time reuse state
52	(34)	BITSTRING	4	CEERCB_CICS_FLAGS	CICS flags from Partition Initialization Call
		1...		CEERCB_CICS_POK_OK	CICS indicated Program Objects are supported
		.1..		*	Reserved
		..1.		CEERCB_CICS_OTE	CICS OTE is supported
		...1		CEERCB_CICS_RRWA_OK	CICS indicated Reusable Rununit Work Areas are available
		.... 1...		CEERCB_CICS_OTE2_OK	CICS OTE II is supported
		.... .11.		*	Reserved
		1		CEERCB_CICS_TRANS_OK	CICS dump data set is supported
56	(38)	ADDRESS	4	CEERCB_CICS_QR_TCB	CICS QR TCB address

Table 13. Region Control Block (RCB) Constants

Len	Type	Value	Name	Description
Declare constants for operating system, hardware, and subsystem CEERCBSYSTM, CEERCBHRDWR, CEERCBSBSYS				
1	DECIMAL	0	CEERCBSYUND	Undefined
1	DECIMAL	1	CEERCBSYUNS	Unsupported
1	DECIMAL	2	CEERCBSYVM	VM
1	DECIMAL	3	CEERCBSYMVS	z/OS Underlying Hardware
1	DECIMAL	0	CEERCBHWUND	Undefined
1	DECIMAL	1	CEERCBHWUNS	Unsupported
1	DECIMAL	2	CEERCBHW370	System/370, non-XA
1	DECIMAL	3	CEERCBHWXA	System/370 XA
1	DECIMAL	4	CEERCBHWESA	System/370 ESA Underlying Subsystem
1	DECIMAL	0	CEERCBSSUND	Undefined

Region Control Block (RCB)

Table 13. Region Control Block (RCB) Constants (continued)

Len	Type	Value	Name	Description
1	DECIMAL	1	CEERCBSSUNS	Unsupported
1	DECIMAL	2	CEERCBSSNON	No subsystem
1	DECIMAL	3	CEERCBSSTSO	TSO
1	DECIMAL	5	CEERCBSSCIC	CICS
1	DECIMAL	0	CEERCB_REUSE_NONE	Not a reuse environment
1	DECIMAL	1	CEERCB_REUSE_FULL	Reuse, full init is needed
1	DECIMAL	2	CEERCB_REUSE_PART	Reuse, partial init is needed
1	DECIMAL	3	CEERCB_REUSE_TERM	Terminate the reuse environment

Table 14. Region Control Block (RCB) Cross Reference

Name	Hex Offset	Hex Value	Level
CEERCB	0		1
CEERCB_EXTERNAL	0		2
CEERCB_PCBCHAIN	2C		3
CEERCB_REUSE_STATE	30		3
CEERCB_VERSION_ID	28		3
CEERCB_ZDEL	1C		3
CEERCB_ZFREEST	24		3
CEERCB_ZGETST	20		3
CEERCB_ZLOD	18		3
CEERCBBIMODAL	B	80	4
CEERCBDMEMBR	14		3
CEERCBEYE	0		3
CEERCBFLAGS	B		3
CEERCBHRDWR	9		3
CEERCBLRR	B	40	4
CEERCBLRRTR	B	20	4
CEERCBSBSYS	A		3
CEERCBSYSTM	8		3

The fields are defined as follows:

CEERCBSYSTM

Underlying operating system. The value indicates the operating system supporting the active program. The values are defined as follows:

0 Undefined; this value should never occur after initializing Language Environment

1 Unsupported

2 VM/ESA

3 z/OS

CEERCBHRDWR
Underlying hardware. The value indicates the type of hardware on which the program is executing. The values are defined as follows:
0 Undefined; this value should never occur after initializing Language Environment
1 Unsupported
2 System/370, non-XA
3 System/370, XA
4 System/370, ESA

CEERCBSBSYS
Underlying subsystem. The value indicates the subsystem, if any, on which the program is executing. The values are defined as follows:
0 Undefined — this value should never occur after initializing Language Environment
1 Unsupported
2 None — the program is not executing under a subsystem according to Language Environment
3 TSO
4 IMS
5 CICS

CEERCBFLAGS
A byte containing various flags. The flags are defined in the bits of the byte, from high order to low order, as follows:
0 CEERCBBIMODAL; bimodal addressing is available
1 CEERCBLRR; ON= Lib Routine Retention is in effect
2 CEERCBLRRTR; ON= Lib Routine Retention is is being terminated
3–7 Reserved

CEERCBDMEMBR
Address of the region member list.

CEERCB_ZLOD
Address of region-level load routine. The parameters to this routine are the same as for the process-level load routine. The modules loaded by this routine remain loaded until explicitly deleted by the region-level delete routine.

CEERCB_ZDEL
Address of the region-level delete routine. The parameters to this routine are the same as for the process-level delete routine.

CEERCB_ZGETST
Address of the region-level GETMAIN routine. The parameters to this routine are the same as for the process-level GETMAIN routine. Storage obtained by this routine remains allocated until explicitly freed by the region-level FREEMAIN routine. The *user_word* parameter should not be filled in.

CEERCB_ZFREEST
Address of the region-level FREEMAIN routine. The parameters to this routine are the same as for the process-level FREEMAIN routine. The *user_word* parameter should not be filled in.

CEERCB_VERSION_ID
This four byte numeric field contains the Language Environment Version, Release, and Modification levels. It is a fullword integer field, which is defined as follows:
byte 0 a copy of CEERCBSYSTM

byte 1 Version in hex
byte 2 Release in hex
byte 3 Modification level in hex

This field would be useful when debugging a problem using a static dump.

CEERCB_PCBCHAIN
This field points to the first PCB on the chain. The PCB may belong to either a batch environment or PICI environment. The field may be NULL, which would be the case under CICS and for PIPI processes.

CEERCB_REUSE_STATE
This field indicates the run-time reuse state; the following values are defined:
0 This is not a reuse environment
1 Reuse environment, full initialization is needed
2 Reuse environment, partial initialization is needed
3 Terminate the reuse environment

CEERCB_CICS_FLAGS
A byte containing various flags. The flags are defined in the bits of the byte, from high order to low order, as follows:
0 CEERCB_CICS_POK_OK; CICS indicated Program Objects are supported
2 CEERCB_CICS_OTE; CICS OTE is supported
3 CEERCB_CICS_RRWA_OK; CICS indicated Reusable Rununit Work Areas are available
4 CEERCB_CICS_OTE2_OK; CICS OTE II is supported
7 CEERCB_CICS_TRANS_OK; CICS Dump data set is supported
1, 5, 6 Reserved

Notes:
1. CICS SPF: The RCB can be in key 8 storage under CICS. Member languages should assume the storage is write-protected when running in key 9. Also, storage allocate by the region-level GETMAIN service is always in key 8 under CICS. It is write protected when running in key 9.
2. Storage allocated at the region level should be released at the region level and storage allocated at the process level should be released at the process level.

Language Environment Member List and Event Handler

A Language Environment member list is created during region, process, enclave, and thread initialization. Each is a table of member-specific data. The length of the member list is determined by the highest assigned member number, which is 18 for Language Environment. Thus, indices range from 0 to 17 inclusive. An entry is reserved for each member that is known to Language Environment. The offset into the list is determined by using the member code defined in the program prolog (PPA2) as an index. The contents of the member list are shown in Figure 28 on page 75.

-0018	CEEMEMLEYE CL8'CEEMEML'	
-0010	CEEMEMLVER - Version	CEEMEMLLEN - length
-000C	Reserved	
-0008	Reserved	
-0004	CEEMEMLSIZE - Number of entries in member list	
000000	CEEMEMLDEF - Member 0 defined (8 bytes)	
000008	CEEMEMLEXIT(0) - Address of member 0 event handler for region, process, or enclave. Reserved for thread level	
00000C	Reserved	
	/	/
	/	/
16*n+0	CEEMEMLDEF(n) - Member n defined (8 bytes)	
16*n+8	CEEMEMLEXIT(n) - Address of member n event handler for region, process, or enclave. Reserved for thread level	
16*n+C	Reserved	

Figure 28. Member List Format

The fields are defined as follows:

CEEMEMLEYE
The eyecatcher for the member list.

CEEMEMLVER
The version number for the control block; set to 1.

CEEMEMLLEN
The total length of the control block in bytes.

CEEMEMLSIZE
The number of entries in the control block. Set to 18.

CEEMEMLDEF
Eight bytes, member-defined; initially set to zero.

CEEMEMLEXIT
Address of the member language event handler. If the member event handler does not exist, this field is set to point to a dummy event handler, which always returns -4 in R15.

This field is set during region, process, or enclave initialization. For thread-level processing, this field is reserved.

Notes:

1. A member language should write only into its CEEMEMLDEF field in the member list.
2. CICS SPF: The RCB can be in key 8 storage under CICS. Member languages should assume the storage is write protected when running in key 9. Member languages should insure that they are running in key 8 before writing into the member list.

Member List

When certain events occur, Language Environment calls a member-provided event handler, and passes it a parameter list consisting of an event code and other event-specific information. This allows the member to process its own resources within the context of the event.

Language Environment can allocate any of its control blocks above the line. Any member code that accesses a Language Environment control block must run in AMODE(31) to have addressability to the control blocks.

Language Environment gets a member's event handler address from the member list entry. Each language running in a Language Environment environment that provides a signature CSECT is required to have an event handler routine. For a description of signature CSECTs, see "Signature CSECT" on page 139. The load name of the event handler routine must be CEEEV*nnn*, where *nnn* is a decimal member number. The values for *nnn* are in Figure 15 on page 17.

During enclave initialization, CEEEV*nnn* is dynamically loaded. Its address is saved in the member list as the event handler entry point. All other entries in the member list are initialized to the address of a Language Environment-provided default event handler. Event handlers are required to set a return code in R15. If an event handler does not process the event being called, the return code should be set to -4. For more information about events, see Chapter 15, "Member Language Information" on page 443.

Language Environment Callable Services Calling Conventions

Language Environment callable services supports the following argument passing styles:

- Indirect/by value
- Indirect/by reference

Language semantics usually determine when data are passed by value and when they are passed by reference.

Calls that occur within the same HLL, or between the compiled code and its associated HLL library support routine are free to choose the manner in which arguments are passed.

In Language Environment, the following calling conventions are followed.

- All Language Environment languages must support the indirect access mode for passing arguments for external calls.
- The last argument pointer in the argument list body has the high-order bit ON. Thus, the length of the argument list can be determined through the argument list itself.
- When no argument is provided, R1 must be zero.
- All addresses are considered to be 31-bit addresses. Explicit ESA support is not provided.
- All stack frames on the call path must be back-chained, even if they are not explicitly on the Language Environment-managed stack.
- When a stack frame is present on the Language Environment-managed stack, it must be in the format of a DSA containing a valid NAB. Except for those exceptions noted in "Language Environment Dynamic Storage Area – Non-XPLINK" on page 29, the first word of the DSA must contain zero.
- Language Environment callable services, at times, impose their own restrictions.

Callable Services Syntax Declarations

Throughout this document, the callable service syntax is shown as a C function prototype; a function declaration for the routine which is called. Data structures are described by C **struct** definitions.

By using the C function prototype, the argument list as well as the data type of each argument can be shown accurately and in one place. In addition, the prototype makes clear if a parameter is passed by value or by reference. The caller then matches parameters to the argument descriptions.

The application writer's interface is described from the callee's point of view. Usually, when the call is described from the caller's point of view, the data type of each parameter is not clear unless it is explained later in the document. It is also often not clear which parameters are required for calling by reference rather than by value.

Some basic properties of the callable services are:

- C function declarations have a return type of void since they are procedures. No value is returned by the function.
- All parameters are passed by reference.
- Each argument is a pointer.
- Brackets '[]' surround parameters that are optional.

Optional Parameter Support

Optional parameters are represented by a zero address in the parameter address list. Not all HLL compilers are capable of generating this form of optional parameter. Thus, the syntax examples are misleading for some HLLs.

Language Environment tolerates the high-order bit on in the parameter address list for an optional parameter. The high-order bit is used to indicate the "end-of-list".

Data Type Definitions

To insure a consistent interpretation of the arguments, the following data type definitions are used in the callable service descriptions. When declaring fixed length strings in C or C++ of size *n*, specify a length of *n+1* so the NULL can be placed in the *n+1* position. Language Environment neither sets nor interrogates the *n+1*st position. A *stack frame* in the next section is equivalent to a DSA.

CEE_COND
: A condition variable, as defined by the type pthread_cond_t

CEE_ENTRY
: Entry point address of a Language Environment-conforming function to be run on a new thread

CEE_MUTEX
: A mutex object, as defined by the type pthread_mutex_t

CEE_RWLOCK
: A read/write lock, as defined by the type pthread_rwlock_t

CEE_THDID
: An identifier representing a pthread-crafted thread, as defined by the type pthread_t

Data Type Definitions

CHARn
A string (character array) of length *n*

CONST INT
A fullword constant numeric value

ENTRY
Language-dependent entry constant and/or entry variable

FEED_BACK
A mapping of the feedback (condition) code; see Chapter 5, “Condition Representation” on page 217

FLOAT4
A 4-byte single-precision floating-point number

FLOAT8
A 8-byte double-precision floating-point number

INT2 A 2-byte signed integer

INT4 A 4-byte signed integer

LABEL
Language-dependent label variable

LABEL370
370 extensions to CSC label variable; see “LABEL Variable” on page 79

POINTER
A fullword address pointer

VSTRING
A Language Environment string of arbitrary length, which is used for polymorphic string parameter declarations. The string may be any one of a fixed-length string, a null-terminated varying string (known as an ASCIIZ string), or a length-prefixed string.

Note: Language Environment assumes the following defaults for VSTRING:
- For input parameters, assume a halfword length-prefixed character string.
- For output parameters, assume a fixed-length 80-character string padded right with blanks.

Strong alignment is assumed in all data structures. Each item is aligned on the proper boundary for its type with padding, if necessary.

ENTRY Variable

Language Environment defines an entry variable as a doubleword, and is shown in Figure 29.

+0	Code_address
+4	0 (external) / HLL specific

Figure 29. Format of an Entry Variable

Language Environment’s support of entry variables has the following characteristics:

- An entry variable can be either an external routine (nesting level zero), or an internal routine (nesting level greater than zero). The nesting level can be determined statically at compile time.
- Language Environment's use of an entry variable is restricted to an external variable, for example, a nesting level zero.
- An entry variable consists of a doubleword. The first word contains the entry point address of the routine, and for external routines the second word contains a zero.
- An HLL can use the second word of the entry variable for internal routines to enforce block scoping rules.
- An entry variable for an internal (nested) routine can only be created and used by the same HLL. It is the responsibility of the called routine to establish its proper block scope as presented by the entry variable.

LABEL Variable

Language Environment defines a label variable to have a fixed portion and a language-dependent portion that is pointed to by an extension field. The label variable is used in the service CEEGOTO. For more information, see "CEEGOTO — Restart Execution at Specified Label" on page 249.

Callable Service Example

An example of a callable service declaration is shown below for the fictitious service CEESERV. A list explaining each argument follows the syntax description. The information given for each argument is:

- Whether it is an input only, input/output, or output only argument
- Any values that have special meaning
- A description of invalid parameters when necessary

Usage notes generally follow each description. They contain information about error conditions and any clarifications needed to completely specify the behavior of the service.

Syntax

void CEESERV(*heap_id, size, address, [fc]*)

```
INT4      *heap_id;
INT4      *size;
POINTER   *address;
FEED_BACK *fc;
```

In C, a variable that has an asterisk preceding it is a pointer. To be more precise, **heap_id* is a pointer to the variable *heap_id* in the statement `x = *heap_id`. It has the value of the pointer *heap_id*.

Chapter 2. CALL Linkage Conventions

This chapter describes the program call linkage conventions supported by Language Environment:

- The standard Language Environment linkage, used by all Language Environment-conforming languages
- FASTLINK linkage, used by default with OS/390 C++ and High Performance Compiled Java (HPCJ)
- Extra Performance Linkage (XPLINK), produced by the OS/390 C and C++ compilers to provide optimal performance for a certain class of applications

Terminology

The terminology around the call or function invocation is not exactly the same in all HLLs. Figure 30 summarizes the terminology in this section.

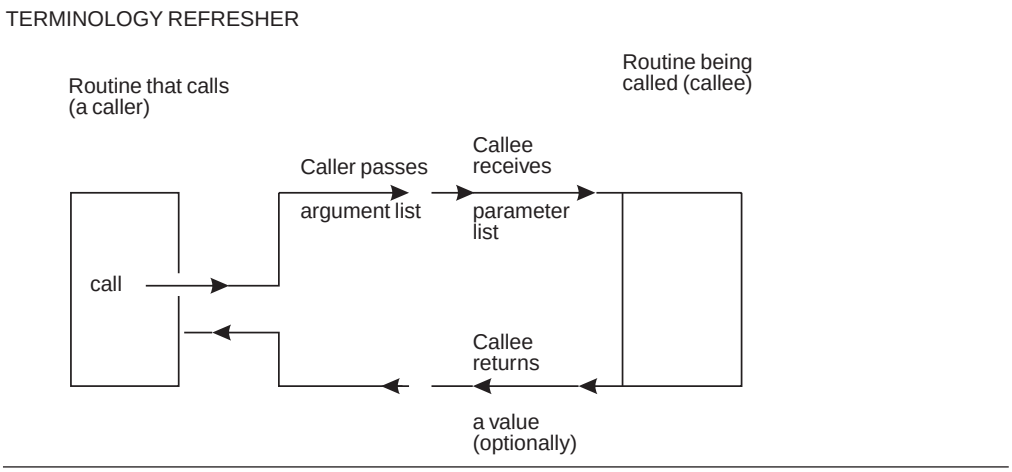

Figure 30. CALL Terminology Refresher

The formats of a Language Environment argument list and parameter list are identical. Rather than refer to both formats in this section, the term argument list only is used. However, everything that applies to an argument list format also applies to a parameter list format.

There are two access modes for arguments:

Direct The value of the argument is placed directly in the argument list body.

Indirect
The body of the argument list contains a pointer to the argument value.

Programming languages have two basic argument passing semantics:

By value
The value of the object is passed. No change made by the callee to the argument value is reflected in the calling routine.

By reference
Changes made by the callee to the argument value are reflected in the calling routine.

© Copyright IBM Corp. 1991, 2002

Standard CALL Linkage Conventions

The prime purpose of a call or a function invocation is to transfer control to a target routine and optionally pass/receive data to/from the called routine. The transfer of control and communication must be as efficient as possible. Language Environment assumes that:

1. Caller's arguments match the callee's parameters.
2. The only supported way to pass arguments on the ILC call is **indirectly**, either by **reference** or by **value**.
3. Pointers longer than 31 bits are **NOT** supported.
4. Pointers are assumed to be 31-bit capable.

This section describes the standard Language Environment protocols for passing arguments to external routines. These protocols do not apply to internal routines or to compiled code calling its own library routine. Each HLL is free to decide the method for transferring control as well as passing arguments between internal routines.

Register Usage

Linkage

```
GPR1    => a list of argument addresses, terminated with an address
           containing a 1 in its high order bit
GPR2-12 => Preserved
GPR13   => an 18-word save area
GPR14   => the return point in the caller's routine
GPR15   => the entry point in the called routine
FPRs    => not preserved, value undefined
```

Stack Format

Figure 31 shows the standard Language Environment stack storage model.

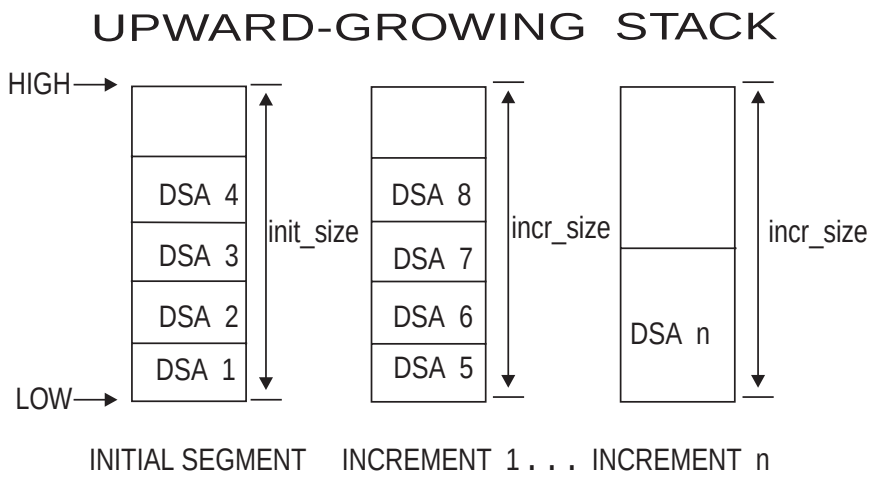

Figure 31. Language Environment Non-XPLINK Stack Storage Model

Allocate/Extend/Return Storage in User Stack

DSA allocation code sequences must be used whenever a DSA is required and/or needs to be extended. The generated code and the Language Environment and member libraries use code sequences such as the following examples. Rules which must be followed are:

- A DSA allocated in the Language Environment user stack must be in the Language Environment format. Storage management expects the CEEDSANAB field to be located at offset X'4C' from the start of the DSA. Figure 26 on page 30 shows the format of a Language Environment DSA.
- Stack storage must be requested in doubleword increments, and is obtained from the stack in doubleword increments. This ensures that a DSA begins on a doubleword.

Figure 32 on page 84 shows an example of the code sequence to allocate a DSA in the user stack when the calling routine is known to pass the Language Environment Anchor Area address in R12. R13 points to a valid DSA containing the current next available byte address, CEEDSANAB. Note that R13 is set to point to the new DSA only after the new DSA has been completely constructed.

Figure 33 on page 84 shows an example of a code sequence that gets additional storage appended to the DSA in the user stack. Note that the DSA extension is not guaranteed to be contiguous with the DSA.

Figure 34 on page 85 shows an example of a code sequence freeing a DSA extension. The code sequence depends upon the proper initialization of CEEDSAPNAB (prolog NAB) before the DSA is extended. Member languages can save the *prolog NAB* in CEEDSAPNAB or elsewhere. The NAB value is the DSA address as it has been acquired by prolog code and before it is extended. There is no Language Environment requirement to use the CEEDSAPNAB field for this purpose when allocating user stack extensions. However, there *is* a Language Environment requirement to use CEEDSAPNAB when allocating from the Library stack.

Note: If the STACK(,,,FREE) run-time option is in effect, empty user stack segments are returned to the operating system at the next stack overflow request, or at termination.

The DSA stack storage in the current user stack segment is automatically freed when R13 is updated by the **L 13,4(,13)** instruction at procedure or block termination. Freeing stack storage occurs because the current NAB is always accessed from the DSA pointed to by R13 when a routine is entered.

The registers do not need to be those shown in the examples as long as the interface to the stack overflow routine, whose address is contained in CEECAAGETS, adheres to the following conditions:

- The stack overflow routine is called with a BALR instruction. R15 contains the entry point address of the stack overflow routine and R14 the address of the next sequential instruction in the caller routine.
- R0 contains the newly generated NAB address from the BALR instruction. That is, it would have been the NAB address if the segment were long enough. This value and the information in the DSA allows the stack overflow routine to determine the minimum amount of storage to obtain for the next stack segment.
- R13 contains the address of the last DSA in the stack and this DSA contains a valid NAB value.

Examples of Managing the User Stack: The examples in this section illustrate some user stack management techniques. Figure 32 on page 84 shows how to manage a DSA allocation.

```
ENTRYPT  B     *+20                   SKIP OVER CONSTANT AREA
         DC    AL4(X'00C3C5C5')       EYECATCHER '.CEE'
         DC    AL4(length)            DSA LENGTH
         DC    AL4(CEEPPA1-ENTRYPT)   OFFSET TO PPA1
         B     1(,15)                 WRONG ENTRY POINT, CAUSE EXCEPTION
CL..0    STM   14,12,12(13)           SAVE CALLER'S REGISTERS
         L     Ra,CEEDSANAB-CEEDSA(,13) LOAD NEW DSA ADDRESS
         L     0,length               LOAD DSA LENGTH
         ALR   0,Ra                   GENERATE NEW NAB ADDRESS
         CL    0,CEECAAEOS-CEECAA(,12) EXCEED CURRENT STORAGE SEGMENT?
         BNH   CL..1                  NO - WE GOT IT
         L     15,CEECAAGETS-CEECAA(,R12) ADDRESS OF STACK SEGMENT MGR
 *-- Input to stack overflow routine
 *-- 1) R0  calculated required next available byte
 *-- 2) R12 address of CEECAA
 *-- 3) R13 caller's save area address
 *-- 4) R14 return address
 *-- 5) R15 stack overflow routine entry point address
         BALR  14,15                  GET ANOTHER STACK SEGMENT
 *-- Upon return from the stack segment manager:
 *-- 1) R15 has the new DSA address
 *-- 2) R0  has the new NAB address
         LR    Ra,15                  PUT DSA ADDRESS INTO WORK REGISTER
 CL..1   ST    13,4(,Ra)              BACK CHAIN NEW DSA TO CALLER
         ST    0,CEEDSANAB-CEEDSA(,Ra) STORE NEW NAB ADDRESS
 *-- The following instruction is required to set the
     Language Environment architecture.
 *-- first word of the DSA to zero (some exceptions noted).
         XC    0(2,Ra),0(Ra)          ZERO FIRST HALF WORD
 *-- The following instruction is optional.  It is used to store the
 *-- prolog NAB address for later use.  For example, to free a DSA
 *-- extension, we just copy CEEDSAPNAB back to CEEDSANAB.
         ST    0,CEEDSAPNAB-CEEDSA(,Ra) STORE END OF PROLOG NAB ADDRESS
         LR    13,Ra                  SET DSA POINTER REGISTER
```

Figure 32. DSA Allocation, User Stack

Figure 33 shows how to manage a DSA extension.

```
         L     Ra,CEEDSANAB-CEEDSA(,13) LOAD DSA EXTENSION POINTER
         L     0,length               LOAD EXTENSION LENGTH
         ALR   0,Ra                   GET STACK NAB ADDRESS
         CL    0,CEECAAEOS-CEECAA(,12) EXCEED CURRENT STORAGE SEGMENT?
         BNH   CL..1                  NO - WE GOT IT
         L     15,CEECAAGETSX-CEECAA(,R12) ADDR OF STACK EXTENSION RTN
 *-- Input to DSA extension overflow routine
 *-- 1) R0  calculated required next available byte
 *-- 2) R12 address of CEECAA
 *-- 3) R13 caller's Language Environment-managed DSA
 *-- 4) R14 return address
 *-- 5) R15 DSA extension overflow routine entry point address
         BALR  14,15                  GET ANOTHER STACK SEGMENT
 *-- Upon return from the stack segment manager:
 *-- 1) R15 has the new DSA extension address
 *-- 2) R0  has the new NAB address
         LR    Ra,15                  SET DSA EXTENSION POINTER REGISTER
 CL..1   ST    0,CEEDSANAB-CEEDSA(,13) STORE NEW NAB ADDRESS
```

Figure 33. DSA Extension, User Stack

In the example in Figure 34 on page 85, the NAB value was previously saved in field CEEDSAPNAB.

```
MVC   CEEDSANAB-CEEDSA(4,13),CEEDSAPNAB-CEEDSA(13) FREE EXTENSION USING
                                                   SAVED NAB VALUE
```

Figure 34. Free a DSA Extension Using Saved NAB Value

Languages that save the prolog NAB at a different location should replace CEEDSAPNAB-CEEDSA(13) with the appropriate storage location. Do not use this code sequence unless CEEDSAPNAB was initialized as shown at the bottom of Figure 32 on page 84.

Obtain a DSA in User Stack with R13 Pointing to Save Area

Figure 35 on page 86 shows an example of the code sequence to allocate a DSA in the user stack when the calling routine is known to be passing the Language Environment Anchor Area address in R12 and R13 points to a O/S save area that might or might not be a DSA.

The DSA stack storage in the current user stack segment is automatically freed when R13 is updated by the **L 13,4(,13)** instruction at procedure or block termination.

When a DSA cannot be contained within the current stack, a stack overflow routine that does not depend upon R13 pointing to a DSA is called. The address of this overflow routine is held in the CAA at CEECAAGETS1. Typically, this overflow routine is called after a call to CEEVGTUN, described in “CEEVGTUN — Next Available Byte Locator Service” on page 88. The interface is as follows.

- The stack overflow routine is called as shown below using a BALR instruction. R15 is the entry point address of overflow routine and R14 the return address.
- R1 contains the current NAB.
- R0 contains the result of the BALR instruction. That is, it is what would have been NAB value if the segment were long enough. This value and the information in R1 allows the stack overflow routine to determine the minimum amount of storage to obtain for the next stack segment. The requested amount of storage for a DSA must be in doubleword increments.
- R13 contains the address of a standard OS save area, which can be a DSA. Note that the NAB value is **not** obtained from the save area, and the contents of the save area are not changed by either the CEEVGTUN routine or the overflow routine whose address is in CEECAAGETS1.

```
ENTRYPT  B     *+20                    Skip over constant area
         DC    AL4(X'00C3C5C5')        Eyecatcher 'CEE'
         DC    AL4(length)             DSA Length rounded to a dword
         DC    AL4(CEEPPA1-ENTRYPT)    Offset to PPA1
         B     1(,15)                  Disable this entry point
CL..0    STM   14,12,12(13)            Save caller's regs
         L     15,CEECAACELV-CEECAA(,12)    Get libvec
         L     15,CEECELVVGTUN-CEECELV(,15)   Get A(Get User NAB)
         BALR  14,15                   Find the user NAB
         LR    1,15                    Save NAB into R1
         L     15,16(,13)              Reset 15 to ENTRYPT
         L     0,length                Get new DSA len rounded to a dword
         ALR   0,1                     Calc a new NAB
         CL    0,CEECAAEOS-CEECAA(,12) Exceed current stack segment?
         BNH   CL..1                   No
         L     15,CEECAAGETS1-CEECAA(,12)  A(overflow routine)
 *-- Input to stack overflow routine
 *-- 1) R0  calculated required next available byte
 *-- 2) R1  current NAB
 *-- 2) R12 address of CEECAA
 *-- 3) R13 caller's save area address
 *-- 4) R14 return address
 *-- 5) R15 stack overflow routine entry point address
 *--
          BALR  14,15                 GET ANOTHER STACK SEGMENT
 *-- Upon return from the stack segment manager:
 *-- 1) R15 has the new DSA address
 *-- 2) R0  has the new NAB address
 *--
          LR    R1,15                 Put DSA addr into work reg
 CL..1    ST    13,4(,R1)             Back chain the DSA
          ST    0,CEEDSANAB-CEEDSA(,Ra)  Save the new NAB address
 *-- The following instruction is required to set the
     Language Environment architecture.
 *-- first word of the DSA to zero (exceptions noted).
          XC    0(2,Ra),0(Ra)         Zero the first half word
          LR    13,R1                 Make the new DSA official
```

Figure 35. DSA Allocation in User Stack when R13 Does Not Address a Language Environment DSA

Allocate/Return Storage in Library Stack

DSA allocation code sequences can be used whenever a DSA is required from the Language Environment library stack. It is always below the 16M line. Obtaining storage from the library stack is illustrated in the following examples. Several coding rules must be followed:

- A DSA allocated in the Language Environment library stack must be in the Language Environment format. Figure 26 on page 30 shows the format of a Language Environment DSA. For example, storage management expects the CEEDSANAB field to be located at offset X'4C' from the start of the DSA.
- Stack storage must be requested in doubleword increments, and is obtained from the stack in doubleword increments. This ensures that a DSA begins on a doubleword.
- User stack NAB must be carried forward in the CEEDSANAB field.
- Library stack NAB (CEECAALNAB) is saved in CEEDSAPNAB before being updated by the current routine.
- Due to this special use of CEEDSAPNAB, library stack extensions cannot be extended like user stack frames.

Figure 36 shows a coding example that allocates a DSA in the library stack. The maintenance of the user stack CEEDSANAB value is required to allow a routine using the library stack to call a routine expecting to use the user stack. This example passes the caller's CEEDSANAB address through unchanged. The library stack NAB address is maintained in the CAA field CEECAALNAB. The library beginning of stack and end of stack addresses are also maintained in the CAA fields, CEECAALBOS and CEECAALEOS, respectively. Each routine using a library stack must save the CEECAALNAB address in the CEEDSAPNAB field at the time of entry. Special processing by the **go to out of block** function interrupts the normal flow of control to restore the CEECAALNAB value from the CEEDSAPNAB field in all DSAs in the library stack.

Figure 37 on page 88 shows a coding example to return from a routine which has allocated a DSA in the library stack.

Note: Empty library-stack segments are returned to the operating system at the next invocation of CEECAAGETLS, or at termination.

Examples to Manage Library Stack: This sections contains examples of how to manage the library stack. Figure 36 shows how to manage a DSA allocation.

```
 ENTRYPT  B     *+20                  SKIP OVER CONSTANT AREA
          DC    AL4(X'00C3C5C5')      EYECATCHER '.CEE'
          DC    AL4(length)           DSA LENGTH
          DC    AL4(CEEPPA1-ENTRYPT)  OFFSET TO PPA1
          B     1(,15)                WRONG ENTRY POINT, CAUSE EXCEPTION
CL..0     STM   14,12,12(13)          SAVE CALLER'S REGISTERS
          L     Ra,CEECAALNAB-CEECAA(,12) LOCATE LIBRARY STACK NAB
          L     0,length              LOAD DSA LENGTH
          ALR   0,Ra                  GENERATE NEW NAB ADDRESS
          CL    0,CEECAALEOS-CEECAA(,12) EXCEED CURRENT STORAGE SEGMENT?
          BNH   CL..1                 NO - WE GOT IT
          L     15,CEECAAGETLS-CEECAA(,R12)  A(LIBRARY STACK SEG MGR)
 *-- Input to library stack overflow
 *-- 1) R0  calculated required next available byte
 *-- 2) R12 address of CEECAA
 *-- 3) R13 caller's save area address
 *-- 4) R14 return address
 *-- 5) R15 library stack routine entry point address
          BALR  14,15                 GET ANOTHER STACK SEGMENT
 *-- Upon return from the stack segment manager:
 *-- 1) R0  has the new NAB address
 *-- 2) R15 has the new DSA address
 *--
          LR    Ra,15                 PUT DSA ADDRESS INTO WORK REGISTER
 CL..1    ST    13,4(,Ra)             BACK CHAIN NEW DSA TO CALLER
          MVC   CEEDSANAB-CEEDSA(4,Ra),CEEDSANAB-CEEDSA(13) SAVE USER
                NAB ADDR
          MVC   CEEDSAPNAB-CEEDSA(4,Ra),CEECAALNAB-CEECAA(12) SAVE LIB
                NAB ADDR
          ST    0,CEECAALNAB-CEECAA(,12) STORE NEW LIBRARY NAB ADDRESS
          XC    0(2,Ra),0(Ra)         ZERO FIRST HALFWORD
          LR    13,Ra                 SET DSA POINTER REGISTER
```

Figure 36. DSA Allocation, Library Stack

Figure 37 on page 88 shows how to manage a DSA return.

```
         MVC   CEECAALNAB-CEECAA(4,12),CEEDSAPNAB-CEEDSA(13) RESET LIB
                                       NAB ADDR
         L     13,4(,13)               LOAD CALLER'S DSA ADDRESS
         LM    14,12,12(13)            LOAD CALLER'S REGISTERS
         BR    14                      RETURN TO CALLER
```

Figure 37. DSA Return, Library Stack

CEEVGTUN — Next Available Byte Locator Service

The Language Environment storage manager provides a service that returns the next available byte address for the user stack to the caller. CEEVGTUN is a S/370-specific CWI (compiler writer interface) that performs this service.

CEEVGTUN isolates the user from Language Environment internals. This prevents the problem of having generated code use any of the Language Environment storage management internal control blocks and structures. Only a low-level interface is provided with the following conventions.

Input Registers	R0–R11	Not used.
	R12	Address of CAA.
	R13	Save area address of the CEEVGTUN caller's caller. Note that this save area is not modified by CEEVGTUN.
	R14	Return address to the caller.
	R15	Address of CEEVGTUN.
Output Registers	R0–R14	Unchanged.
	R15	Next available byte in the user stack.

CEEVGTUN

Call this CWI interface as follows:

```
L     R15,CEECAACELV-CEECAA(,R12)
L     R15,148(,R15)
BALR  R14,R15
```

If CEEVGTUN encounters any errors, it abends with code 4088. The reason code associated with abend 4088 indicates the cause of the failure:

99 An exception occurred while trying to locate the NAB, or a zero back chain pointer was found prior to finding the Language Environment dummy DSA.

Use the code sequence shown in Figure 38 only in a library routine, not in compiler-generated code.

```
CL..0    STM   14,12,12(13)          SAVE CALLER'S REGISTERS
         L     15,CEECAACELV         GET ADDRESS OF LIBVEC
         L     15,CEECELVVGTUN-CEECELV(15)  LOAD ADDR OF GET USER NAB
                                     SERVICE
         BALR  14,15                 CALL THE SERVICE
         LR    Ra,15                 LOAD NEW DSA ADDRESS
         L     15,16(,13)            RESTORE ADDRESSABILITY
         L     0,length              LOAD DSA LENGTH
         ALR   0,Ra                  GENERATE NEW NAB ADDRESS
         ...
```

Figure 38. Get Next Available Byte in User Stack

CEEVSSEG — Return the Stack Segment Bounds

The Stack Segment Bounds CWI returns the beginning point and the ending point of a Language Environment stack segment given an address within the bounds of that segment.

Syntax

void (*CEECELVVSSEG) (*ss_ptr, ss_type, ss_start, ss_end, ss_chain, [fc]*)

```
POINTER      *ss_ptr;
INT4         *ss_type;
POINTER      *ss_start;
INT4         *ss_end;
POINTER      *ss_chain;
FEED_BACK    *fc;
```

CEECELVVSSEG

A field in Language Environment LIBVEC that points to the CEEVSSEG CWI. Call this CWI interface as follows:

```
L     R12,A(CAA)            Get the address of CAA in R12
L     R15,CEECAACELV-CEECAA(,R12)
L     R15,3372(,R15)
BALR  R14,R15
```

ss_ptr **(input)**

An address within the bounds of a user or library stack segment.

ss_type **(output)**

A fullword binary integer representing the type of Language Environment stack segment containing *ss_ptr*. If *fc* is CEE3MO, the *ss_type* value is undefined. The possible values for *ss_ptr* are:

1 User stack
2 Library stack
3 Downward-growing stack

ss_start **(output)**

A pointer to the beginning of the stack segment, containing *ss_ptr*. If *fc* is CEE3MO, the *ss_start* value is undefined.

ss_end **(output)**

A pointer to the end of usable stack segment, containing *ss_ptr*. If *fc* is CEE3MO, the *ss_end* value is undefined.

ss_chain **(output)**

A pointer to the next stack segment. If *ss_ptr* points to the last stack segment, *ss_chain* is set to 0. If *fc* is CEE3MO, the *ss_chain* value is undefined.

fc **(output/optional)**

The resulting feedback code. The following conditions can result from this service:

CEE000	Severity	0
	Msg_No	N/A
	Message	The service completed successfully.

CEE3MO	Severity	3
	Msg_No	3800
	Message	The address passed to the stack segment service is not within any Language Environment stack segment.
	Explanation	The address passed to the stack segment bounds service is not within any currently allocated Language Environment stack segment.
	Programmer Response	This is an internal problem. Contact your service representative.
	System Action	The bounds, segment type, and chain are undefined.

Usage Notes:

1. This service is intended for members to use to access stack extensions when the NAB field in a DSA indicates a stack frame has been extended beyond the current stack segment boundary.
2. The *ss_ptr* value is usually a DSA or NAB address. CEEVSSEG searches both the library and user stack for the segment containing this address.
3. The sequence of stack segments that follow the segment that contains *ss_ptr* can be located by repeatedly passing the value of *ss_chain* returned by the previous call to **CEEVSSEG** into another call to **CEEVSSEG** and obtaining new values of *ss_type*, *ss_start*, *ss_end*, and *ss_chain*.

The Standard Save Area

The save area is 128 bytes (X'80') in length. The first 72 bytes of the save area matches the format of a traditional OS save area and is provided to called routines for the purpose of saving general registers. Certain fields are critical to this description and are included here as well as documenting existing HPCJ usage of some reserved fields. This existing usage occurs in OS/390 V1R1 and older code.

X'00'	STKLANG - Language word
X'04'	CEEDSABACK - Back chain pointer to previous save area
X'08'	CEEDSAFWD - Forward chain pointer to next save area
X'0C'	CEEDSASAVE - GPR save area (registers 14 through 12)
X'4C'	CEEDSANAB - Next Available Byte
X'78'	Used by C to save the parm list address (r1)
X'7C'	Reserved

Argument List Format

An argument list is located by an argument list pointer. In S/370™, the argument list pointer is held in general purpose R1. An argument list has an architected way to access individual arguments and their data descriptors. It is sometimes known as a **Type-I parameter list**. The format of this argument list is seen in Figure 39 on page 91.

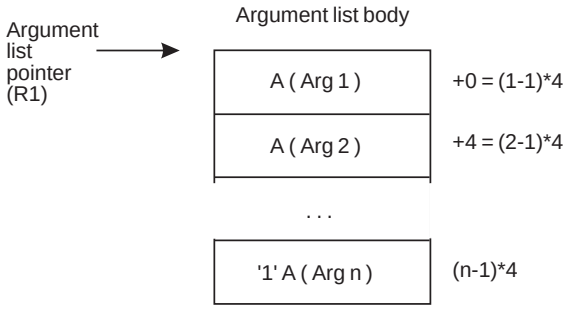

Figure 39. S/370 Argument/Parameter List Format

Argument Passing - C Linkage

When a C Linkage routine is called from another C Linkage routine, GPR1 contains the address of the caller's argument list. The argument list may contain addresses of arguments passed indirectly (by reference) or values of arguments passed directly by value. The end of the parameter list is not marked by the high order bit being turned on. Since the end of the argument list is not identified the programmer is responsible to ensure that the callee only accesses as many parameters as the caller had arguments.

In C Linkage the caller of a function whose return value is not passed in registers must provide storage where this value may be placed. The address of such storage is passed as a hidden first argument at the beginning of the argument list.

C Linkage utilizes a logical argument list. At a +0 Entry Point the argument list is located by means of GPR1 and may be placed anywhere in storage at the discretion of the calling routine.

C Linkage supports both direct and indirect arguments for calls between cooperating routines and thus the argument list may contain a mixture of values and addresses.

When using C conventions, floating point parameters and structure return values are placed in storage whose address is passed as the first parameter, other types are returned in GPR15. The +0 Entry Point prolog must relocate the return value into register 15 or in some cases into storage provided by the caller. In C the arguments are all passed in storage, thus the logical and physical argument list are identical.

All addresses in the argument list are of a consistent width of 4 bytes. Each parameter takes up a multiple of 4 bytes.

Pointers to indirect arguments in the list are aligned on fullword boundaries. Direct by value scalar arguments are right-aligned within one or more 4 byte slots in the argument list. With this alignment, they may be simply loaded into an appropriate register. In particular:

- fullword integers and addresses are aligned on a fullword boundary.
- halfword integers are placed in the 2 low order bytes of a fullword-aligned field.
- single byte integers are placed in the low order byte of a fullword aligned field.

  Note: The high order bytes are sign extended in the case of a signed argument or are zero for an unsigned argument.
- a Boolean scalar is placed in the low order bit of a fullword-aligned field, whose high order 31 bits are zero.

- real or complex floating point numbers are fullword-aligned and may occupy one or more 4-byte slots in the argument list.
- structures begin in the high order byte of a fullword and occupy an integral number of fullwords. Any padding bytes on the right end of the last full word are unused and their value is undefined.

FASTLINK CALL Linkage Conventions

FASTLINK is essentially an extension of the OS linkage convention, which has been in use since the inception of System/360™. FASTLINK linkage is used today as the default linkage for the C++ and High Performance Compiled Java (HPCJ) compilers.

Register Usage

Linkage

```
GPR0    => writable Static Area (WSA)
GPR1-3  => arguments (depending upon type)
GPR4-12 => preserved
GPR12   => CAA, the key Language Environment control block
GPR13   => the caller's stack frame in the Language Environment stack.
           Each such stack frame begins with a 36-word save area.
GPR14   => the return point in the caller's routine
GPR15   => the entry point in the called routine
FPRs    => arguments (depending upon type)
```

Some of the caller's arguments are placed in registers and the remainder in a portion of what will be the callee's stack frame. With FASTLINK the caller enters the called routine at an offset of 16 bytes from the called routine's entry point.

Notes:

1. The module is assumed to be readonly and never changed during execution, in particular the eyecatcher, frame size or offset to PPA1 do not change during execution.
2. The frame size field in the prolog above is owned by the compiled module and the value it contains is whatever is required by the prolog of the routine. It does not necessarily contain the precise value of the dsa size. For example, in C++ vararg routines, it contains the size of the fixed portions of the stack frame. Since the frame size may change from one call to the next and the size of the argument area is passed from the caller to the callee, a run-time calculation of the actual dsa size is required.
3. The eyecatcher is changed slightly to signify that this procedure uses the FASTLINK dsa layout and is thus prepared for future support of extended addresses.

FASTLINK is designed to operate in conjunction with the Language Environment-provided execution stack. The current stack pointer is maintained in GPR13. The prolog of a Language Environment-enabled routine may allocate space (referred to as a ″frame″, ″stack frame″ or ″dsa″) in this stack for its own purposes and to support subsequent calls to other routines. The stack frame is an architected area that contains the following sub-sections:

- A save area to be used by any routines called by the executing routine for saving registers and other values as architected. This save area, which is the first sub-section in a Language Environment stack frame, is pointed to by GPR13, and begins with a 36-word OS save area.

- A link area reserved for Language Environment defined use. This area contains a number of architected fields used by languages and glue code.
- The argument area where the caller of this routine places arguments when more arguments exist than can be passed in registers.
- The near auto area used to guarantee a register spill area within 4K of the stack pointer.
- The work area where scratch and or automatic variables are located.

Stack Format

Stack Frame Mapping

The storage map of a typical FASTLINK stack frame is shown below.

```
  High     |==================================|
           |                                  |
           | Work area (Automatic)            |
           ------------------------------------
           |              | Arg Word 5        |   ---
           |              | Arg Word 4        |     |
           |              | Arg Word 3 *      |    Created by caller prior
           |              | Arg Word 2 *      |     to call.
           | Args Area    | Arg Word 1 *      |     |
           |                  ...             |   ---
           | ***  arglist prefix         *** |
CEEDSAARG->------------------------------------   X'B8'
           |                                  |
           | Near_Auto (32 bytes)             |
CEEDSANRA->------------------------------------   X'98'
           |                                  |
           | Linkage Area                     |
CEEDSALNK->------------------------------------   X'80'
           |                                  |
           | Save Area                        |
           |                                  |
CEEDSA---->|==================================|

= R13
  Low
* Corresponding parm in register
```

Figure 40. Typical FASTLINK Stack Frame Storage Map

The stack frame is double-word-aligned, in terms of where the stack frame pointer (R13) points.

The Save Area

The save area in FASTLINK is 128 bytes (X’80’) in length. In detail the save area appears as:

X’00’	STKLANG - Language word Note 1
X’04’	CEEDSABACK - Back chain pointer to previous save area Note 2
X’08’	CEEDSAFWD - Forward chain pointer to next save area Note 3
X’0C’	CEER14DSASAVE - GPR Link save area (register 14) Note 4
X’10’	CEER15DSASAVE - GPR Link save area (register 15) Note 4
X’14’	CEEDSAGSAVE - GPR save area register 0 through 12
X’48’	(future AR save area register 1 through 12) Note 5

Notes:

1. The PPA1 indicates validity of fields in the language word.
2. The back chain pointer to the previous save area must be set by any routine that allocates a stack frame.
3. The forward chain pointer is not required to be valid and is reserved.
4. The return address must be saved at offset X'0C' and the entry point address at X'10'.
5. Shown only for illustration purposes. The Language Environment routines use some locations between X'0C' and X'7C'. In particular Language Environment continues to use Save Area words (X'4C' and X'6C') for the same purposes as in R1. This does not cause a problem in R1 FASTLINK because
   a. Language Environment does not support greater than 32 bit addressing in FASTLINK-compiled code or in library code, thus there is no requirement to save or restore ARs from this area.
   b. FASTLINK generated code does not read or write from the this area except
      1) in the code prolog, and then only to retrieve the NAB from the caller's stack frame.
      2) possibly to set the NAB at X'4C' in the current stack frame, for example just prior to a call to a Language Environment facility.
6. The only part of the caller's dsa that a callee may update is the portion of the caller's Save Area into which registers are saved (X'0C' thro X'47'). In particular the STKLANG, CEEDSABACK, and CEEDSAFWD fields may not be changed by a callee. Words X'48' through X'7C' of the save area in the caller's dsa are never changed by any FASTLINK callee.
7. FASTLINK programs containing calls must be compiled assuming that the current Save Area addressed by R13 offsets x'0C' through X'7C' are overwritten across calls.
8. For stack unwinding and exception processing purposes, the PPA1 specifies which GPR registers must be restored from their slots in the save area.

The Link Area

The linkage area is used to store the Next Available Byte (NAB) in CEEODSANAB. CEEODSARET contains information used in support of the +0 Entry Point entry point. It contains a logical flag rather than the real return address in some instances. Neither CEEODSARET nor the following words are initialized if they are not in use.

X'00'	CEEODSANAB - Next Available Byte Note 1
X'04'	CEEODSARET - Real Return or epilog flag Note 2
X'08'	Amode switching (reserved)
X'0C'	reserved contents unspecified
X'10'	reserved contents unspecified
X'14'	reserved contents unspecified

Notes:

1. The NAB field points to the first free byte on the stack (double word aligned) following this stack frame. Programs can always assume that the NAB field is double word aligned when they receive control.

2. This word is available for use by the members to control execution of the +0 Entry Point as contrasted to the +16 Entry Point code epilog.

Use of the Link Area is only as described in this document. In particular it must not be used for any other purposes than shown.

The Near_Auto Area

With a large argument area it is possible that none of the Work area is addressable within a 4K displacement of R13. Near_auto is provided to guarantee the compiler some work space in the first 4K block of the dsa. Logically Near_Auto is part of the Work area.

Argument Area

This area at fixed dsa offset X'B8' contains the argument list passed from caller to callee on a procedure call. The format of the argument list follows:

```
--------------------------------
|  address of descriptor hdr * |
--------------------------------
|  Argument 1                  |
--------------------------------
|  Argument 2                  |
--------------------------------
:
--------------------------------
|  Argument N                  |
--------------------------------

* value is undefined if call is not described.
```

Figure 41. Argument List Passed on a Procedure Call

C and FASTLINK utilize argument lists of almost identical format. The FASTLINK argument list is always prefixed with space for a pointer to the descriptors.

Upon return the callee's argument area may have been modified regardless of format. FASTLINK programs must assume that callees may update their parameters and rebuild the argument area prior to each call.

Work area

This is the space (work_size) owned by the executing procedure (which allocated the stack frame) and may be used at its discretion for local variables and temporaries. The executing routine has total control of the work area.

Total stack frame size

The size of the stack frame is best described as the difference between the NAB and stack pointer, R13, assuming that both are in the same stack segment. Most frequently it will be:

```
frame_size = save_size + arg_area_size + work_size + link_area + near_auto
```

The frame_size is rounded up to a double word boundary.

Stack Segment Pad

FASTLINK CALL Linkage

For FASTLINK a 256 byte pad is added at the high end of the stack segment and is used to allow calling programs to build their argument lists in the callee's stack frame with minimal code. Thus if the caller's argument list is smaller than 256 - save_size - near_auto - link_size (72 bytes), the parameter list can be constructed without checking for stack segment overflow or including logic to support stack frame segment overflow. FASTLINK uses a new CAA field (CEECAAESS) for its stack segment limit. The stack segment is actually 256 bytes larger than indicated in CEECAAESS. CEECAAESS = MAX(CEECAAEOS - 256,0). The STACK run-time option is reflected in the stack size value in CEECAAEOS, thus the FASTLINK stack appears to be 256 bytes smaller.

Few procedures create argument lists larger than this size and thus code to handle large argument lists will not be common. Callers which create argument lists greater than allowed above will have to ensure that the current stack segment has sufficient space (check against CEECAAESS) or, if not, obtain a free segment from CEL. The beginning address of this additional segment must be placed in the NAB field of the current frame and arguments must be stored at the appropriate offset in the stack segment just obtained.

When stack segment overflow is detected in the prolog, the run time is called to obtain a new segment. As well as allocating a new segment, this code also copies the argument area from the old stack segment to the new stack segment. No language allows addresses of parameters to be passed as a parameter and thus such a copy preserves address values in the argument list. The stack segment overflow logic is the same as for non-FASTLINK except that CEECAAEOS must also be set to mimic the setting of CEECAAESS. While the overflow stack segment is being used CEECAAESS, like CEECAAEOS, has a value of zero.

Stack Segment

A stack segment containing multiple stack frames is shown below. The stack pointer register (R13) grows from numerically lower storage addresses to numerically higher ones.

```
 High    ------------------------------------ <-----CEECAAEOS
         | Stack Pad (256 bytes)            |
         ------------------------------------ <-----CEECAAESS
         // Unused Stack Space             //
         //                                //
         |==================================| <----
         |                                  |   N |
         | Work area                        |   A |
         |                                  |   B |
         ------------------------------------     |
Callee   |                                  |     |
         | Args Area                        |     |
         |                                  |     |
         ------------------------------------     |
         |                                  |     |
         | Near Auto                        |     |
         |                                  |     |
         ------------------------------------     |
         |                                  |     |
         | Link area                        |  ----
         |                                  |
         ------------------------------------
         |                                  |
         | Save Area                        |
         |                             -----------
         |==================================|  B    | <---- <R13
         |                                  |  A  C |   N |
         | Work area                        |  C  H |   A |
Caller   |                                  |  K  A |   B |
         ------------------------------------     I |     |
         |                                  |     N |     |
         | Args Area                        |       |     |
         |                                  |       |     |
         ------------------------------------       |     |
         |                                  |       |     |
         | Near Auto                        |       |     |
         |                                  |       |     |
         ------------------------------------       |     |
         |                                  |       |     |
         | Link Area                        |       |  ---
         |                                  |       |
         ------------------------------------       |
         |                                  |       |
         | Save Area                        |       |
         |                                  |       |
Low      |==================================|
```

Figure 42. Stack Segment Showing FASTLINK Frames

Argument List Format

FASTLINK utilizes a logical argument list. Upon entry to the FASTLINK entry point at +16, the argument list is located in the argument area which is at a fixed location in what will be the callee's stack frame.

At the +16 Entry Point some of the argument values are passed in registers and some in storage. The physical argument list in storage has space for the arguments which are passed in registers. The logical argument list contains all of the arguments. The logical argument list consists of the physical argument list plus the contents of those registers used to pass arguments. Depending upon the type of the parameters, some arguments are loaded into either the GPRs or the FPRs.

FASTLINK CALL Linkage

FASTLINK linkage supports both direct and indirect arguments for calls between cooperating routines and thus the argument list may contain a mixture of values and addresses. Because the argument list may contain values, it has no explicit termination bit and the length of the FASTLINK argument list is specified elsewhere.

Note: The width of argument list elements is 4 bytes or a multiple thereof when direct values are passed.

Argument Passing

The logical argument list used with FASTLINK linkage is of the same format as the C Linkage argument list, however, GPR1 does not point to the argument list. Instead, the arguments are placed into the argument area of the callee's stack frame and/or certain general purpose or floating point registers.

In FASTLINK the first 3 words of the virtual argument list are loaded into GPR1-3 if they represent indirect arguments or direct value arguments of data types other than floating point (real or complex). If a direct value floating point argument (real or complex) begins in the first 3 argument words, it is loaded into an appropriate number of floating point registers FPR0 through FPR6. Note that only one such floating point value is loaded into a floating point register. If a second floating point value begins in the first 3 virtual argument words, it is located in storage. When a floating point argument is loaded in FPRs, the contents of the GPRs corresponding to those argument words are unpredictable and are not preserved over the call.

Arguments that are not loaded into a GPR or FPR are located in the physical argument list in storage. The argument slots in the physical argument list corresponding to the arguments loaded into registers are reserved and their contents at the time of call are undefined; these slots in the argument area may be used by the callee.

Note: The unused, reserved slots in the argument list may be used to store the arguments passed in registers. This is useful if the callee takes the address of an argument that is passed in a register or in a code produced by a compiler which has fixed register usage assignments which overlap with registers 1 through 3.

C allows arithmetic to be performed on pointers and the address of a parameter may be taken. Although it is not ANSI C conforming, some programmers use address arithmetic to locate and reference any of the parameters. Since some arguments are located in registers this practice may access uninitialized storage. Hence if the address of a parameter is taken then the callee's prolog code must store all of the parameters passed in registers into the physical argument list (potentially any of the arguments may be referenced without the compiler being able to detect such references).

The argument list can be modified by the called routine. However, such updates are not reflected to the calling programs HLL variables, for example, when compiling code for the caller the compiler assumes that the argument list is destroyed across a call.

Considerations for FASTLINK Routines with variable number of parameters

When a C++ caller has a prototype visible which ends with an ellipsis then the first three words of the argument list are loaded in GPRs 1-3 regardless of their type, and no values are loaded into the floating point registers. From the rules given earlier we observe that for FASTLINK callers without prototypes, GPRs 1-3 are

always loaded with the first three words of the virtual argument list. Thus when a procedure who's prototype contains ellipses is invoked at the +16 entry point the location of the first words of the argument list is always in the GPRs. The +16 Entry Point prolog stores GPRs1-3 into the physical argument list. The +0 Entry Point prolog does not copy the argument list into the argument area. Prologs for both the +0 Entry Point and the +16 Entry Point must pass GPR1 containing the address of the physical argument list to the body of the code and therefore a varargs code body always addresses its parameters based upon GPR1. GPRs 2-3 must be preserved by a vararg routine when entered at the +16 Entry Point.

Register Conventions

The FASTLINK register linkage conventions at the +16 Entry Point follow. The caller is responsible to ensure that registers are set up as indicated. The callee is responsible to preserve or restore certain registers as noted. The stack pointer (R13) must be kept valid at all times during execution.

GPR0	Undefined, Not preserved.			
GPR1-3	First argument words, or undefined: 1. If no arguments exist 2. If the corresponding arguments are floating point scalars or floating point scalar complex values.			
GPR1-3	When are GPR Registers 1-3 preserved?			
GPR1-3	Logical Argument Word 1	Logical Argument Word 2	Logical Argument Word 3	Registers Preserved
GPR1-3	empty	empty	empty	GPR1-3
GPR1-3	argument	empty	empty	GPR2-3
GPR1-3	argument	argument	empty	GPR3
GPR1-3	argument	argument	argument	none

Note: *empty* means that their is no corresponding parameter value at all. Thus a call with no parameters at all preserves the GPRs 1-3, whereas a call with one floating point extended parameter uses the FPRs to contain the floating value and, except for a very special case, GPRs 1-3 have an undefined value and are not preserved over the call.

GPR4-11	Undefined, preserved.
GPR12	CAA address. Must be valid on entry to any Language Environment routine. Need not be valid during execution of a routine. Preserved.
GPR13	Stack frame address. Must be valid at all times.
GPR14	Return address. Preserved.
GPR15	The +0 Entry Point entry point address. Must be valid on entry. Value contains return code on return. **Note:** The return code referred to here is not to be confused with the return value for functions. Some languages use a return code to facilitate multiple return points, and others pass a status code between the caller and the callee using this return code.
FPR0-6	Value of first floating point value if one of the first three argument words represents a direct floating point argument, otherwise undefined. For functions with floating point result, contains result on exit, otherwise not preserved.
Condition register	Undefined. Not preserved
Program mask	As documented in this book

Vector Registers	Undefined Not preserved
ARs	Undefined Preserved

Leaf Routines

Leaf routines are routines that do not call any other routines (with the possible exception of routines that are inlined). Leaf routines:

- whose work area requirements may be obtained from the stack segment pad
- which are not vararg
- which do not perform stack frame extension
- which are not bilingual

need not allocate a stack frame. Such routines are called Sleaf routines and they may use truncated prologs and epilogs as illustrated later.

Note: When entered at the +16 Entry Point, the value of the NAB in the caller's DSA provides 256 bytes of pad area that can be used by the current routine to store data into.

Code Sequences

This section contains annotated code sequences for FASTLINK linkages (calls, prologs and epilog). These code sequences will, in general, be used by FASTLINK C++ and HPCJ but they are not necessarily exhaustive. Thus the compiler may have to supplement it to meet compiler-specific requirements like dealing with long argument lists. C-to-FASTLINK is shown as an illustrative example — there currently is no support in either C++ or HPCJ for old-to-new linkage.

FASTLINK, Non-Sleaf Routine

```
FASTLINK to FASTLINK, Non-Sleaf Routine

R0      Undefined, not preserved
R1-R3   Args
R4-R11  Undefined, must be preserved
R12 =>  CAA
R13 =>  Language Environment stack frame (DSA)
R14,R15 Linkage registers

Caller:
00- 58F0 ****             L    15,=V(routine)
04- 4DE0 F010             BAS  14,16(15)         Call to FASTLINK entry pt
08- 4700 ****             NOP  N

Callee:
00                routine  DS    0D                C-style entry point...
00- 47F0  F001             B     1(,r15)           ...is invalid for FASTLINK
                           DC    X'01'             Language Environment
                                                   eyecatcher
04- 01C3C5C5               DC    CL3'CEE'
08- ********               DC    A(SIZE)           DSA size
0C- ********               DC    A(PPA1-routine)   Offset to PPA1
                           DS    0D                FASTLINK entry point
10- 90Ex  D00C             STM   r14,rXX,12(r13)   Save caller's regs
14- 58E0  D04C             L     r14,76(,r13)      Get NAB
18- 4100  Exxx             LA    r0,Size(,r14)     Move NAB forward by Size
1C- 5500  C314             CL    r0,CEECAAESS-CAA(,r12)
                                                   Check for stack end
20- 4140  F04C             LA    r4,76(,r15)       Set up basereg
24- 47D0  F03A             BNH   58(,r15)          Branch if no stack overflow
28- 58F0  C31C             L     r15,CEECAAOGETS-CAA(,r12)
                                                   FASTLINK overflow routine
2C- 184E                   LR    r4,r14            Copy requested NAB into r4
2E- 05EF                   BALR  r14,r15           Branch to overflow rtn
30- 00000000                     =F'0'
34- 0540                   BALR  r4,r0             Establish addressability...
36- 4140  4016             LA    r4,22(,r4)        ...and set up basereg
3A- 5000  E04C             ST    r0,76(,r14)       Save new NAB in DSA
3E- 9210  E000             MVI   0(r14),16         Initialize member word
42- 50D0  E004             ST    r13,4(,r14)       Backchain to caller's DSA
46- 5800  D014             L     r0,20(,r13)       Reload reg 0 (WSA address)
4A- 18DE                   LR    r13,r14           Set new DSA addr in stack reg
                 End of Prolog
4C-              CODE      DS    0H
                           ...
                 Start of Epilog
60- 58D0  D004             L     r13,4(,r13)       Get caller's DSA addr
64- 58E0  D00C             L     r14,12(,r13)      Restore return reg
68- 98yz  Doff             LM    rYY,rZZ,OFF(r13)  Restore other regs
6C- 47F0  E004             B     4(,r14)           FASTLINK return
```

Figure 43. FASTLINK to FASTLINK Linkage Code Sequence, Non-Sleaf Routine

Notes:

1. Instructions at offsets X'00' and X'04' in the caller.
2. Offset X'04' in caller: FASTLINK callers enter the called routine at +16. C linkage callers enter at +0, but for FASTLINK routines this entry point is invalid and will cause an abend.

3. Offset X'08' in caller: The instruction used to pass control from a FASTLINK-enabled routine must be followed by a NOP instruction, which contains the length of the argument list. The index field is reserved and must be zero.

   The base and displacement fields (indicated by ″N″) are treated as a half word signed binary quantity. The value is positive and represents the number of bytes in the argument list. Negative values are reserved.
4. Offset X'00' in callee: This entry point is invalid.
5. Offset X'04' in callee: Bit 7 in the first byte of the eyecatcher indicates that this routine uses the new FASTLINK dsa layout and that the PPA2 is located by a relative offset. This bit must only be non zero if the new dsa layout and relative offsets are used, use a mask to test this bit and not the whole byte for an exact match to X'01' since some other bits may be assigned for special purposes in the future.
6. Offset X'08' in callee: In cases where the stack frame size is not known at compile time such as variable length argument lists (eg C++ varargs) then DSASIZ represents only the fixed portion of the stack frame. The actual stack frame size is calculated from DSASIZ plus the size of the argument list contained in the NOP.
7. Instructions at offsets X'10' and X'68' in callee: Line is only required to save/restore the registers actually required by this routine thus the instruction could be a ST/L or even entirely missing.

   Note that two registers are used in the stack extension logic and thus RXX must be set correspondingly. In routines with few parameters it is possible that no registers beyond 14 and 15 would need to be saved and restored.

   The offset into the save area is based upon the first GPR saved.
8. Offset X'18' in callee: Line may be replaced by the following lines when the stack frame size is larger than 4K.

```
L       DS0,DSASZE-OLD(,15)     Get DSA size
ALR     0,14                    Move Nab forward by size
```

9. Offset X'3E' in callee: Stack frame is marked as FASTLINK for ILC calls with PL/I, COBOL,FORTRAN, or an OS linkage routine, or if this routine needs an exit DSA.
10. Offset X'60' in callee: For details of the handling of function return values, see Function Results.
11. Special considerations, required to handle variable length parameter lists, are documented in Routines with a Variable Number of Parameters.

Considerations for Large Argument Lists

When one routine calls another routine with an argument list greater than 72 bytes, the calling routine must ensure that the current stack segment is large enough to contain the large argument list. The calling routine may elect to accomplish this in two ways.

1. as part of the code to actually generate the call the current stack segment size may be checked and a new segment obtained if necessary. If a new stack segment is required then the current NAB must be updated appropriately prior to the call and just following the return.
2. the calling routines prolog may ensure that sufficient space exists both for the calling routines own DSA requirements plus space for the largest argument list that the calling routine builds.

FASTLINK, Sleaf Routine

```
FASTLINK to FASTLINK, Sleaf Routine


R0      Undefined, not preserved
R1-R3   Args
R4-R11  Undefined, must be preserved
R12 =>  CAA
R13 =>  CEL stack frame (DSA)
R14,R15 Linkage registers

Caller:

00- 58F0  ****             L     r15,=V(leafrtn)
04- 4DE0  F010             BAS   r14,16(,r15)     Call to FASTLINK entry pt
08- 4700  ****             NOP   N

Callee:
 00-               leafrtn  DS    0D               C-style entry point...
 00- 47F0  F001             B     1(,r15)          ...is invalid for FASTLINK
                            DC    X'01'            Language Environment
                                                   eyecatcher
 04- 01C3C5C5               DC    CL3'CEE'
 08- ********               DC    A(SIZE)          DSA size
 0C- ********               DC    A(PPA1-leafrtn)  Offset to PPA1
                            DS    0D               FASTLINK entry point
 10- 9016  D018             STM   r1,r6,24(r13)
 14- 58x0  D04C             L     rX,76(,r13)
                   End of Prolog
 18-               CODE     DS    0H
                            ...
                    Start of Epilog
 34- 9816  D018             LM    r1,r6,24(r13)    Restore regs
 38- 47F0  E004             B     4(,r14)          FASTLINK return
```

Figure 44. FASTLINK to FASTLINK Linkage Code Sequence, Sleaf Routine

Instructions at offsets 10 and 34 in callee are only required to save/restore the registers actually required by this routine and the STM/LM may be replaced by a ST/L if only one register needs to be saved, or may be deleted altogether if no registers need be saved/restored.

CEECAAOGETS Get New Stack Segment Routine

CEECAAOGETS is similar in function to CEECAAGETS except that the linkage is different and it is intended for use by FASTLINK enabled procedures.

Inputs are:

R0	calculated required next available byte
R4	caller's next available byte
R12	address of CAA
R13	caller's save area address which must contain a valid NAB field. The save area addressable by R13 is not useable by CEECAAOGETS.
R14	address of a fullword containing the length of the argument list. Return to the code is made to R14+4.
R15	address of CEECAAOGETS routine

Upon return:

R14	contains the new DSA address
R0	contains the new NAB
R15	undefined
R1-R13	preserved

If the supplied length of the argument list is non zero then the arguments are copied from the old stack segment to the new one. If the Storage option dsa_alloc_value indicates that the stack frame is to be initialized then this routine also initializes the dsa work area as required. The Link area is copied unconditionally from the old stack segment to the new one.

Note: Functions which are var_arg/sleaf do not have their dsa frames initialized by this option.

The condition manager and this code must cooperate for the short on stack storage condition. After stack segment overflow has occurred then this routine must ensure that the stack address returned in R0 allows for the 256 byte stack segment pad, for example, the request size behaves as if it were 256 bytes larger that the input R0 would indicate.

Extra Performance Linkage (XPLINK) CALL Linkage Conventions

This section describes the Language Environment XPLINK protocols for passing arguments to external routines. XPLINK is a linkage convention which differs substantially from the standard Language Environment linkage and FASTLINK linkage protocols.

Introduction

The primary goal of XPLINK is to make subroutine calls as fast and efficient as possible by removing all nonessential instructions from the main path. This is achieved by introducing the following:

- growing the stack from higher to lower addresses (″negative-″ or ″downward-growing″)
  - to eliminate overhead in stack frame allocation
  - to eliminate need for inline stack overflow check
  - to allow for an improved epilog
  - to allow addressability to information (such as parameters) in the caller's stack frame
- biasing the stack pointer (by 2048 bytes), so that small functions can save registers in their own stack frame before updating the stack pointer, avoiding address generation interlocks
- reassignment of registers (see ″Register Conventions″ on page 17) to support more efficient saving and restoring of registers in function prologs and epilogs
- parameter passing in registers, accepting return values in registers
- elimination of Inter-language Call (ILC) overhead (marking of stack frame) for non-ILC calls
- faster call sequences for inter-module calls
- passing the address of the data area associated with a function, its ″environment″, to the function on entry
- no branching around CEL words

- use of relative branching for function calls where possible
- unification of the various (RENT and NORENT, DLL and NODLL) function pointer implementations, reducing the costs of all operations involving function pointers

An important additional goal is the reduction in size of the function in memory. This is accomplished by eliminating unused information in function control blocks.

Register Usage

Linkage

```
GPR1-3  => arguments (depending upon type)
GPR4    => the caller's stack frame in the downward-
           growing stack. This is biased and actually points to 2048
           bytes before the real start of the stack frame.
GPR5    => the called routine's environment pointer
GPR6    => the entry point in the called routine if
           the call was made by a BASR instruction
GPR7    => the return point in the caller's routine. The return point
           also contains information to determine if the call
           was made via BASR or branch relative.
GPR8-15 => preserved
GPR12   => CAA, the key Language Environment control block
FPRs    => arguments (depending upon type)
```

Stack Format

Figure 45 shows the Language Environment XPLINK stack storage model.

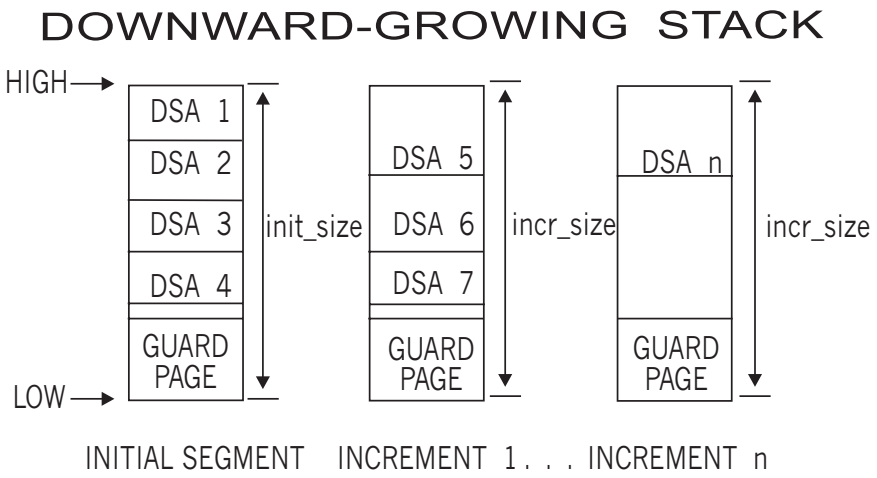

Figure 45. Language Environment XPLINK Stack Storage Model

Stack Frame Mapping

The prolog of a function usually allocates space (referred to as a ″frame″, ″Stack Frame″, or ″DSA″ - dynamic storage area) in the Language Environment-provided stack segment for its own purposes and to support calls to other routines.

Stack Frame Mapping

Stack Layout:

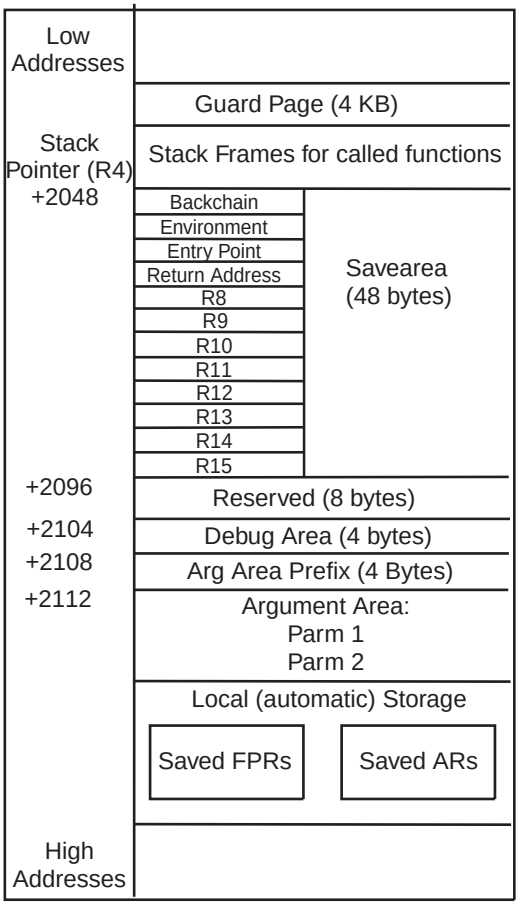

Figure 46. Language Environment XPLINK Stack Frame Layout

Stack Frame layout is shown here. The stack register points to a location 2048 bytes before the stack frame for the currently active routine. It grows from numerically higher storage addresses to numerically lower ones, that is the stack frame for a called function is normally at a lower address than the calling function. The stack frame is quadword-aligned.

Savearea (48 bytes): This area is always present when a stack frame is required. It holds up to 12 registers. The first two words hold, optionally, GPRs 4 and 5, the registers containing the address of the previous stack frame and the environment address passed into the function. This is followed by the two words containing GPR6, which may or may not hold the actual entry point address depending on the type of call, and GPR7, the return address. As many of the 8 non-volatile registers as are used by the called function are saved in the following 32 bytes.

Except when registers are saved in the prolog, this area may not be altered by compiled code. The PPA1 GPR Save Mask indicates which GPRs are saved in this area by the prolog.

Stack overflow is detected by the STM instruction used to save registers in this save area.

Storage of the Backchain field in the save area is triggered by the optional XPLINK(BACKCHAIN) compiler option (or at the convenience of the compiler). The

Environment Address is stored when the TEST compiler option or the optional XPLINK(STOREARGS) compiler option is specified, or at the convenience of the compiler.

The third slot in the save area contains the value in GPR6 on entry to the routine. If the routine was called with a BASR instruction this will be the address of the function's entry point. The fourth slot contains the return address. The return point can be examined to determine how the function was called: if with a BASR instruction then the entry point address can be found in the third slot of the save area; if with a relative branch then the entry point can be computed from the return address and the branch offset contained in the relative branch instruction.

Debugger Work Area (4 bytes): This area is always present and is for the exclusive use of the debugger. It is uninitialized by compiled code.

Reserved (8 bytes): This area is always present and is for the exclusive use of the runtime. It is uninitialized by compiled code.

Argument area prefix (4 bytes): This area is used for parameter mapping (hidden parameter) to accommodate calls between new and old code. It is uninitialized by compiled code.

Argument area (minimum 16 bytes): This area (at a fixed DSA offset: 64 bytes into the caller's stack frame) contains the argument lists passed on function calls made by the function associated with this stack frame. The called function finds its parameters in the caller's stack frame.

A minimum of 4 words (16 bytes) must be always be allocated.

Local storage: This is the space owned by the executing procedure and may be used for its local variables and temporaries.

Stack Overflow: To maximize function call performance, XPLINK replaces the explicit inline check for overflow with a storage protect mechanism that detects stores past the end of the stack segment.

The stack floor is the lowest useable address of the current stack segment. In the lower storage addresses, it is preceded by a store-protected guard page used to detect stack overflows.

Availability of space for a stack frame is ensured in the function prolog usually by storing into the start of the called function's frame. In case of overflow, this triggers an exception which in turn causes a discontiguous extension of the stack by Language Environment. Functions with a DSA larger than the guard page use the stack floor address in the CAA to verify space availability. Allocation and deallocation of extensions is transparent to the application.

To make the stack appear contiguous to the application, a small stack frame containing all fields up to and including the Argument area will be allocated in the new stack segment for use by the called function and the contents of the caller's stack up to the end of the argument area should be copied into the new stack segment. The length of the argument list expected is available in the called function's PPA1 except for vararg functions, where the entire argument area in the calling function must be copied.

Stores into the guard page done outside the prolog and done outside ″alloca″ built-in processing should be treated as invalid and cause the application to be terminated.

Prolog/Epilog Examples

This section contains typical prolog and epilog code sequences for XPLINK. These are examples, not definitive code sequences that must be generated by conforming compilers.

Small Size Stack Frame (dsasize≤2048 bytes), no backchain, no alloca:

Table 15. Prolog/Epilog Example: Small Size Stack Frame, no backchain, no alloca

```
        DC      0D'0',XL8'00C300C500C500F1' .C.E.E.1
        DC      A(*-8-PPA1),AL.27 (dsasize/32),AL.5(flags)
EP      STM     6,lastused,2048-dsasize+8(4)
        STM     1,Rx,2112(4)            if XPLINK(STOREARGS) or TEST,
                                        or varargs
        AHI     4,-dsasize              update stack pointer
        ...
        function body
        ...
        LM      7,lastused,2048+12(4)   restore registers
        LA      4,dsasize(,4)           restore stack pointer
        BR      7                       return to caller
```

Small Size Stack Frame (dsasize≤2048 bytes), vararg, backchain:

Table 16. Prolog/Epilog Example: Small Size Stack Frame, varag, backchain

```
        DC      0D'0',XL8'00C300C500C500F1' .C.E.E.1
        DC      A(*-8-PPA1),AL.27 (dsasize/32),AL.5(flags)
EP      STM     4,lastused,2048-dsasize(4)
        STM     2,3,2112+4(4)           save varargs if any in first 3
        AHI     4,-dsasize              update stack pointer
        ...
        function body
        ...
        L       7,2048+12(,4)           restore return address
        LM      8,lastused,2048+16(4)   restore remaining registers
        LA      4,2048(,4)              restore stack pointer
        BR      7                       return to caller
```

Intermediate Size Stack Frame (2048<dsasize<4K), no backchain, no alloca, no varargs:

Table 17. Prolog/Epilog Example: Intermediate Size Stack Frame, no backchain, no alloca, no varargs

```
        DC      0D'0',XL8'00C300C500C500F1' .C.E.E.1
        DC      A(*-8-PPA1),AL.27 (dsasize/32),AL.5(flags)
EP      AHI     4,-dsasize              update stack pointer
        STM     6,lastused,2048+dsasize+8(4)
        ...
        function body
        ...
        L       7,2048+12(,4)           restore return address
        LM      8,lastused,2048+16(4)   restore remaining registers
```

Table 17. Prolog/Epilog Example: Intermediate Size Stack Frame, no backchain, no alloca, no varargs (continued)

```
        AHI     4,dsasize               restore stack pointer
        BR      7                       return to caller
```

Large Size Stack Frame (4K≤dsasize≤32768), 31-bit:

Table 18. Prolog/Epilog Example: Large Size Stack Frame (4K≤dsasize≤32768), 31-bit

```
        DC      0D'0',XL8'00C300C500C500F1' .C.E.E.1
        DC      A(*-8-PPA1),AL.27 (dsasize/32),AL.5(flags)
EP      LR      0,4                     save caller's stack register
*       Combine any of the following 3 instructions into STM
        ST      1,2112+0(,4)            if XPLINK(STOREARGS)
        ST      2,2112+4(,4)            if XPLINK(STOREARGS) or 2nd
                                        parameter is vararg
        ST      3,2112+8(,4)            if XPLINK(STOREARGS) or more
                                        than 2 parameters
        AHI     4,-dsasize              update stack pointer
        C       4,CEECAA_STACKFLOOR-CEECAA(,12)
                                        check bottom of stack
        JM      EXTEND
STK     DS      0H
        STM     6,lastused,2048+8(4)
        ST      0,2048(,4)
        ...
        function body
        ...
        LM      4,lastused,2048(4)      restore registers
        BR      7                       return to caller
        ...
        DC      0D'0',XL8 '00C300C500C500F2' .C.E.E.2
        DC      A(this marker - entry point marker)
EXT     DS      0D
        L       3,CEECAAHPGETS-
                CEECAA(,12)
*       GPRs: 0, previous DSA; 3, return; 4, new DSA
        BASR    3,3                     call Language Environment stack
                                        extender
*       GPR0 contains (possibly updated) previous DSA value
        NOP
        J       STK
```

Huge Size Stack Frame (327684K<dsasize), 31-bit:

Table 19. Prolog/Epilog Example: Huge Size Stack Frame (32768<dsasize), 31-bit

```
        DC      0D'0',XL8'00C300C500C500F1' .C.E.E.1
        DC      A(*-8-PPA1),AL.27 (dsasize/32),AL.5(flags)
EP      LR      0,4
        ST      1,2112(,4)              save in XPLINK(STOREARGS) slot
        BASR    1,0                     establish code base for dsasize
        S       4,=A(dsasize)           update stack pointer
        C       4,CEECAA_STACKFLOOR-CEECAA(,12)
                                        check bottom of stack
        JM      EXTEND
```

Table 19. Prolog/Epilog Example: Huge Size Stack Frame (32768<dsasize), 31-bit (continued)

```
STK   DS        0H
      STM       6,lastused,2048+8(4)
      ST        0,2048(,4)              save backchain, possibly updated by
                                        the runtime if there was a stack
                                        extension
      ...
      function body
      ...
      LM        4,lastused,2048(4)      restore registers
      BR        7                       return to caller
      ...
      DC        0D'0', XL8'00C300C500C500F2' .C.E.E.2
      DC        A(this marker - entry point marker)
EXT   DS        0D
      L         3,CEECAAHPGETS-
                CEECAA(,12)
*     Registers: 0, previous DSA; 3, return; 4, new DSA
      BASR      3,3                     call Language Environment stack
                                        extender
      NOP
      J         STK
```

Stack Extension

When the stack frame size is greater than the guard page size, the new stack pointer value must be compared to the CEECAA_STACKFLOOR field. When the stack pointer is less, then a stack expansion routine must be called explicitly to create the new stack increment.

DSA Extension -- alloca(): Sometimes a program's automatic (stack) storage requirements are not known until runtime, DSA extension allows a program to dynamically allocate additional automatic (stack) storage. (The C/C++ compiler built-in function alloca() is the C/C++ implementation of DSA extension.) For XPLINK, allocating additional stack storage will also require moving the register save area at the beginning of the stack frame (ie. the Register 4 value will change). This storage is automatically freed when the function in which it was acquired returns.

When DSA extension causes a stack extension, the processing performed will be very different from normal stack extension in terms of what gets copied to the new stack increment and the mechanism to free the stack increment.

The following discussion explains the rules to be observed in handling alloca() in XPLINK:

- The stack pointer (R4) must always point to a location 2048 bytes before the current function's stack frame. This may or may not be within the Guard page.
- Functions that use ″alloca″ must use a different register (called the ″alloca() register″) to address their automatic storage and their parameters. This register must be set to point to automatic storage (computed from GPR4) in the prolog; it must keep this value throughout the function (until register contents are restored in the epilog).
- A function that uses ″alloca″ must acquire a stack frame and its prolog must store GPRs 4, 6 and 7 in its stack frame. Such a function cannot be considered a XPLeaf routine and may not be marked as such in the PPA.

- The argument area used to construct argument lists for called function must be addressed using the top of the stack pointer (R4).
- All live values from the beginning of the stack frame up to and including the entire argument area must be copied to the new start of the stack frame. This includes all saved registers, but not slots for registers that were not saved. It does not include the Debug Area or the Reserved field. It does not include the Arg Area Prefix field. If an argument list is under construction when alloca() is called then it includes those arguments already constructed, otherwise not. When an external call is made to the runtime for alloca() the generated code must ensure that any live values in the argument area are copied; the runtime is responsible for copying the entire 48-byte savearea.
- alloca must round all requested storage amounts to a multiple of 16 bytes (a quadword) to maintain stack frame alignment
- it is intended that alloca may, in future, be inlined. An inline alloca will trigger a guard page exception if stack extension is required. The design for this is not part of this document.

Functions that use ″alloca″ require changes to their prologs and epilogs in order to maintain addressability to their automatic variables and parameter list. Also, fields in the entry mask and PPA1 must correctly indicate that the routine uses a DSA extension.

```
        DC      0D'0',XL8'00C300C500C500F1' .C.E.E.1
        DC      A(*-8-PPA1),AL.27 (dsasize/32),AL.5(flags)
EP      STM     4,lastused,2048-dsasize(4)
        STM     1,Rx,2112(4)            if XPLINK(STOREARGS), TEST, or
                                        varargs
        AHI     4,-dsasize              update stack pointer
        LA      Ry,64+argsize(,4)       set alloca register
        ...
        function body (addresses auto storage using the alloca() register)
        ...
        L       7,2048+12(,4)           restore return address
        LM      8,lastused,2048+16(4)   restore remaining registers
        L       4,2048(,4)              restore stack pointer
        BR      7                       return to caller
```

For more information see “XPLINK DSA Extension Services” on page 208.

Obtain an XPLINK Downward-Growing Stack Extension: This CWI is invoked when there is not enough room in the current XPLINK downward-growing stack segment to hold the caller’s stack frame. It will be used by C/C++ compiler-generated code when the stack frame size is greater than the size of the guard page (4K).

Input/Output	Register	Used for
Input Registers	R0	Previous stack pointer value (if PPA1 indicates that routine stores the backchain)
	R1 - R2	Not used
	R3	Return Address
	R4	Calculate stack pointer
	R5	Not used

Input/Output	Register	Used for
	R6	Value to be saved at offset 2056 of new DSA
	R7	Return value to be saved at offset 2060 of new DSA
	R8 - R11	Not used
	R12	CAA address
	R13- R15	Not used
Output Registers	R0	Modified previous stack pointer (or unchanged)
	R1 - R3	Unchanged
	R4	New stack pointer
	R5	Unchanged
	R6	Modified entry point
	R7	Modified return address
	R8 - R15	Unchanged

The following is an example of an invocation of this CWI:

```
L       3,CEECAAHPGETS-CEECAA(,12)
BASR    3,3
DC      X'4707'
DC      Y(signed offset/8 to entry point marker)
```

This CWI will return control to its invoker at the return address:

```
BR      3
```

Exceptions

Rules Applicable to Prologs:

- In these rules ″pointing to stack frame″ means ″pointing to 2048 bytes before the stack frame″.
- The prolog must be contiguous (except for the out-of-line call to the stack extender) and less than or equal to 128 bytes in length.
- When a procedure requires a stack frame, it must check the stack segment for space availability in the prolog and it must save GPRs 6 and 7 in the Save Area. GPR6 must be saved by the instruction that checks for stack space availability.
- Saved GPRs must always be saved in their canonical location which is as if a STM 4,15,2048(4) had been executed.
- When a routine does not require a stack frame, it must maintain the contents of GPR7 (return address) and GPR6 received at entry at all times (not just during prolog execution) for exception handling purposes.
- GPRs 6 and 7 may not be changed in the prolog.
- Any instruction that is part of the window ranging from the entry point up to and including the instruction updating GPR4, may not introduce any potential exceptions other than as might be caused by an invalid GPR4.
- Except for a NOP, a prolog may not start with a Branch on Condition instruction (opcode 0x47). (Many non-XPLINK functions start with a branch instruction; this rule minimises the possibility of tools that examine prologs mistaking an XPLINK prolog for an older-style prolog.)
- If the stack pointer (GPR4) is updated before the registers are saved GPR0 must be set to the value in GPR4 at function entry before GPR4 is updated. GPR0 is

updated by Language Environment during stack extension; the updated value should be stored in the backchain field of the stack frame.

- R4 points to the caller's stack frame, the new stack frame, or the proposed new stack frame location (possibly in the guard page) throughout the prolog. No other value is allowed.
- Registers 5-15 may not be modified in the prolog until after GPR4 is updated to point to the new stack frame.
- If an explicit check for stack overflow is not done in the prolog using the ″End of Stack″ field in the CAA, the first instruction that touches the new stack frame must be STM 4,x,nnn(4), STM 5,x,nnn(4), or STM 6,x,nnn(4).

Rules Applicable to Epilogs:

- In these rules ″pointing to stack frame″ means ″pointing to 2048 bytes before the stack frame″.
- The epilog must be contiguous and less than or equal to 128 bytes in length.
- Except for XPLeaf routines, epilog code must extract the return address from the savearea, and it must do this before updating GPR4 to point to the caller's stack frame. In XPLeaf routines, the return address must be taken from GPR7, which remains unaltered by compiled code throughout the life of the function. This allows the runtime to steal the return address for its own purposes.
- GPR4 must point to the current function's stack frame on entry to the epilog; when it's updated it must point to the caller's stack frame. No other value is allowed.
- The epilog contains no call, including alloca().
- Compiled code may not refer to its own stack frame after updating GPR4 .

XPLeaf Routines: XPLeaf routines are functions that make no function calls (including alloca()); do not contain try, catch, or throw statements; and do not acquire their own stack frame.

The following rules apply:

- GPRs 4, 6 and 7 must not be altered by the routine.

Stack Overflow Exception: In XPLINK stack frame allocation is designed to trigger a protection exception when insufficient storage remains in the current stack segment. This exception requires proper handling in the Language Environment interrupt exit.

A valid request for stack extension can be recognized by Language Environment as follows:

- The exception is caused by STM 4,x,nnnn(4), STM 5,x,nnnn(4), or STM 6,x,nnnn(4).
- The target address in nnn(4) is within the guard page of the current stack segment.
- The exception address is within the prolog defined by the PPA1 of the function experiencing the exception.

Exception processing may need to distinguish between a request made in the function prolog and through ″alloca″. For example, set up and initialization of an extension may be different in the two cases (e.g., copying of parameters). The prolog length field in the PPA1 is provided for this purpose.

Exceptions

For requests in the prolog, the required stack frame size is available in the Entry Point Marker while for requests in alloca it must be taken from R0.

When a stack overflow occurs the caller's arguments must be made available in the newly created stack segment. This processing is described in ″Argument Area Length″ on page 37.

It is expected that Language Environment will update the stack floor field in the CAA when the application traverses a stack segment and will handle stack segment deallocation. For calls this could be done by inserting a stack frame for a special library function in the new stack segment such that the function becomes part of the return flow of the application. When a stack segment extension is caused by alloca, the special linkage routine needs to be inserted in the return path of the function issuing alloca. It should be noted that one function could cause multiple segments to be allocated. The active stack segment could be pointed to by a fullword in the CAA.

Stack Unwinding: Since XPLINK does not always provide a back chain a new method for unwinding the stack must be followed:

- Determine whether or not the current instruction address is in a function prolog (see below):
- If the current point of execution is in a prolog, determine whether or not GPR4 has been updated (the offset of the beginning of the instruction updating GPR4 is in the PPA1). If GPR4 has been updated, reverse this by adding the DSA size (found in the entry point marker for the function) to GPR4. This is the address of the previous stack frame.
- At this point, GPR4 points to a 2048 bytes before a valid stack frame (the caller's in the case on an incomplete prolog).
- Using the current GPR4 value, locate the entry point of the function associated with the stack frame:
  - Locate the return address of the function in the 4th slot of the current stack frame at 2060(4). At the return address find the call type, to determine the instruction making the call. If it's a relative branch compute the target offset from the branch instruction contents and its address to determine the entry point. If it's a BASR instruction the entry point to the function is the value passed into the function in GPR6 and stored in the 3rd slot of the current stack frame at 2056(4).
- The current entry point can be used to locate the PPA1 for this function, but this is not required for stack unwinding:
  - Subtract 16 from the entry point address to get the address of the entry point marker.
  - Add the word at 8 bytes past this address (the PPA1 offset) to this value.
- ″Special Linkage″ stack frames contain identifying markers. Language Environment architecture specifies how to use information in this stack frame to get to the previous (possibly non-XPLINK) stack frame.
- The Entry Point Marker contains a flag to indicate whether alloca() is used in the function. If it is not, the entry point marker contains the dsasize of the function associated with the current stack frame; add this value to the current stack frame address to get the address of the previous stack frame.
- If alloca() is used in the function the previous value of GPR4 (2048 bytes before the previous stack frame) is stored at 2048(4).
- Continue as required.

Determining if an Execution Point is in a Prolog: From a point of execution:

- Scan backwards for up to 16 doublewords looking for a doubleword-aligned entry marker as described in Code Markers″ below.
- If not found the current point of execution is not in a prolog.
- If found, the marker is either the Entry Point Marker or contains the offset to the Entry Point Marker.
- In the Entry Point Marker, the word at offset +8 contains the offset, from the marker, of the associated PPA1.
- The PPA1 contains the length of the prolog. If the current point of execution is not within this range (from the entry point, the doubleword following the Entry Point Marker), the current point of execution is not in a prolog.

Finding the Entry Point of the Current Function:

- Determine if the current point of execution is in a prolog. If it is, the entry point is at the beginning of the prolog.
- Locate the return address of the function in the 4th word of the current stack frame at 2060(4). At the return address find the call type, to determine the instruction making the call. If it's a relative branch compute the target offset from the branch instruction contents and its address to determine the entry point. If it's a BASR instruction the entry point to the function is the value passed into the function in GPR6 and stored in the 3rd word of the current stack frame at 2056(4).

Code Markers: The following sequences identify points in code that are significant to Language Environment. Each of these is doubleword-aligned and has the same initial 7-byte sequence. Markers that could be found in the body of compiled code (types 2 and 3) contain the offset of the associated Entry Point Marker at offset +8:

Entry Point Marker (Type 1):

+0	0x00	'C'	0x00	'E'	0x00	'E'	0x00	'1'
+8	offset of PPA1 from Entry Point Marker				dsasize/32			EP flags

In an Entry Point Marker the word at offset +8 is at offset from the beginning of the Entry Point marker to the PPA1 associated with the entry point. ″EP flags″ is:

1	...			Function is an XPLeaf routine, saving registers in its own stack frame but not updating the stack pointer
.	1	..		Function uses alloca()
		0	0	Must be zero

Stack Extension Marker (Type 2): The following marker identifies stack extension code that is logically part of the function's prolog but not within the range of instructions defined to be part of the prolog by the PPA1 ″(Length of prolog)/2″ field:

+0	0x00	'C'	0x00	'E'	0x00	'E'	0x00	'2'
+8	offset to Entry Point Marker from this Marker				Reserved			

Data Marker (Type 3): The following marker follows any data in the code section that might be confused for a ″real″ marker because it contains the values in the first

seven bytes of any marker style:

+0	0x00	'C'	0x00	'E'	0x00	'E'	0x00	'3'
+8	offset to Entry Point Marker from this Marker				Reserved			

Stub Marker (Type 4): The following marker marks the beginning of runtime stubs:

+0	0x00	'C'	0x00	'E'	0x00	'E'	0x00	'4'

Argument List Format

Function Calls: In XPLINK, each function has a data area associated with it, its environment, whose address is passed by a caller in general purpose register 5. For C, and C++ programs this environment will in most cases be the compiler defined area @STATIC. @STATIC is a structure existing once for each compilation unit and residing in the WSA.

Callers therefore need two pieces of information for each function they call:

- the address of the called function's environment area
- the address of the called entry point

This information, organized in two consecutive long integers (fullwords) on a doubleword boundary, is referred to as a Function Descriptor.

Resolution of function linkage is done at the stage in the compile/link/execute process where enough information is available to make the proper choice with respect to performance and flexibility. In some cases, calls can be resolved at compile time. For calls outside a compilation unit the resolution is postponed to the binder for best results, and when DLLs are used, to the run-time environment.

Calling Scheme

Excluding parameter handling, calls are made up of a sequence of instructions (CALL) that load the called function's Environment area address (previously called the Associated Data Area or ADA), load the called function's entry point address, and invoke the called function. Details of the generated sequences for different types of calls are described in separate sections below. Calls to routines in Dynamic Link Libraries (DLLs) are supported naturally without special compiler options.

At every call site Register 12 must contain the address of the CAA.

With XPLINK, the function entry point address is not always passed to the called function. In order to allow Language Environment and other tools to find the entry point of the currently executing routine, every call site, located by the ″return address″ field of the current stack frame, contains information necessary to locate the entry points of both the calling and called functions and, if required, information about floating-point parameters passed and return value adjustment required to allow interface mapping when mixing XPLINK and non-XPLINK code. This is done by encoding information in a NOP instruction at the return point.

Call Information Field

CALL

* *	NOP	0(call type)	Shown as *NOP type,<offset>* in subsequent sequences
	ORG	*-2	Back up to last two bytes of NOP
	DC	AL2(call offset)	A signed offset in doublewords from the doubleword at or preceding the return point (NOP). If negative, offset to Entry Point Marker; if positive, offset to the Call descriptor for this signature

″Call type″ is a 4-bit field describing the type of call. The call is not required to pass the function entry point address; the NOP following the call, which can be found via the return address (in GPR7), provides the information required to compute the entry point address in cases where it's not passed in register.

Call Type	
0000	Reserved
0001	Reserved
0010-0110	Reserved
0111	Special linkage
1000-1111	Reserved

Call offset is a 16-bit field containing the offset in doublewords from the call site to, if negative the entry point marker for the function or, if positive, a call descriptor, described below, which contains both the offset to the entry point marker and information about parameter and return types. This definition requires both entry point markers and call descriptors to be on doubleword boundaries, but imposes no alignment requirement on the call itself. The entry point marker is located by taking the address of the Call Information Field, setting the last 3 bits to zero, and adding 8 * (the call offset).

This results in the function layout shown here:

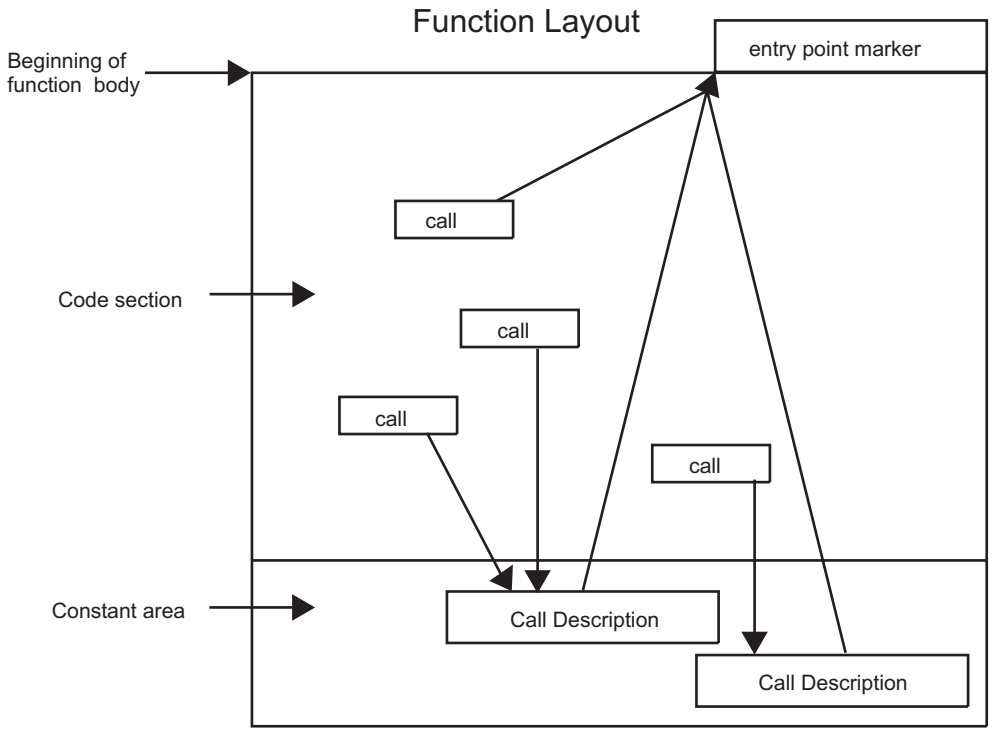

Figure 47. XPLINK Function Layout

Call Descriptor

A call descriptor is created if one of the following occurs:

- The call site is so far removed from the entry point marker of the function that its offset cannot be contained in the 16 bits available in the Call Information Field (the NOP) following the call site.
- The call contains a return value or parameters that are passed in registers or in ways incompatible with non-XPLINK code, that is when the second word of the call descriptor would have a non-zero value

A call descriptor is doubleword aligned with the following format:

+0	Signed offset, in bytes, to Entry Point Marker		
+4	Linkage	Return Value Adjust	Parameter Adjust

The meaning and content of the second word of the Call Descriptor are described in “Argument Passing” on page 121, in “Function Return Values” on page 123, and in “Call Descriptor - Linkage Type” on page 125.

Calls by Name:

Calling Name: The following code sequence is used to call a function by name when that function exists outside the compilation unit, (ie. the function reference is resolved at link-edit time, either statically or dynamically).

Calls relative branch:

```
LM      5,6,...          load environment and function
                         addresses
...
BASR    7,6              call the function
NOP     type,<offset>
```

Function Descriptor (space reserved by compiler):

```
DC      A(environment)   address of function's
                         environment
DC      A(func)          address of function
```

Intra-module calls: When functions are bound within the same program object as the caller, the address constants to the function's environment and entry point are resolved directly by the binder and loader.

Calling Imported Functions: For calls to imported functions the compiler will generate the same instruction sequence as for intra-module calls.

The function descriptors for all calls to imported functions should be initialized by the binder as required for delayed DLL loading.

Function descriptor, unresolved:

```
DC      A(function ID)   function ID
DC      A(CEETHLOC)      address of CEETHLOC
```

Function Descriptor, resolved:

```
DC      A(environment)   address of function's
                         environment
DC      A(func)          address of function
```

Function Pointers: A function pointer is a data type whose values range over procedure names. Variables of this type are usually used in procedure call contexts where the particular procedure to be called cannot be determined at compile time. They can also be passed as arguments of a call or used in comparison expressions.

Function pointers are a fullword quantity that is the address of a function descriptor. With some exceptions, there is only one ″call-by-pointer″ function descriptor per entry point for calls via function pointer.

Note: If an imported function is also called by name, additional function descriptors, as specified in "Calls by Name" on page 118 will also exist.

The exceptions are:

- pointers to internal (nested) functions, discussed below
- pointers to fetched functions and function pointers created by fetched function, because the same function can be fetched more than once.

This is different from NOXPLINK DLL linkage where more than one function descriptor - and hence different function pointer values - may exist for one function, each created in the WSA of the routine that takes the address of (or calls) the function. With a unique function pointer value, *int* to pointer casting works as expected when used with DLLs, providing the same result as with S/390® non-DLL and on most other platforms. Also, function pointer comparisons will be significantly faster.

Language Environment will create function descriptors for functions whose address is taken in a separate dynamically acquired storage area (not loaded as part of a module's WSA image) based on information added to a module by the binder. The compiler will flag taking the address of a function differently if it is for a function pointer than if it is for a call by name.

Calling Sequence:

```
L       Rx,fp              load address of descriptor from
                           function pointer
...
LM      5,6,16(Rx)         load environment and function     1
                           addresses
...
BASR    7,6                call the function
NOP     type,<offset>
```

Function Descriptor:

```
DC      A(environment)     address of function's
                           environment
DC      A(func)            address of function
```

Reentrancy: Reentrant programs are structured to allow more than one user to share a single copy of a program object. Users create reentrant programs by writing code that does not modify data in the executable. This is referred to as a naturally reentrant program. In many languages users can also request that the compiler create reentrant programs on their behalf by allocating external data in the writable static area; this is referred to as constructed reentrancy. If a function refers to data in the writable static, its environment must also reside in writable static.

When a program is naturally reentrant it may be desirable to bypass constructed reentrancy to avoid allocation and initialization of a writable static area.

Argument Passing Register Conventions: The tables below describe the XPLINK register conventions used for passing arguments.

Register	Conventions on function entry exit	Volatility
GPR 0	undefined	not preserved
GPR 1	1st word of argument list or undefined part of return value or undefined	n/a
GPR 2	2nd word of argument list or undefined part of return value or undefined	n/a
GPR 3	3rd word of argument list or undefined part of return value or undefined	n/a
GPR 4	Pointer to caller's stack frame - 2048	preserved
GPR 5	Address of environment	not preserved
GPR 6	undefined	not preserved
GPR 7	Return address	not preserved
GPR 8-11	Undefined	preserved
GPR 12	The CAA address	preserved
GPR 13-15	Undefined	preserved

Register	Conventions on function entry exit	Volatility
FPR 0	FP parameter 1 or undefined part of return value or undefined	not preserved
FPR 2	FP parameter 2 or part of FP parameter 1 in register pair 0,2 (for long double) or undefined part of return value or undefined	not preserved
FPR 4	FP parameter or undefined part of return value or undefined	not preserved
FPR 6	FP parameter or part of an FP parameter in register pair 4,6 (for long double) or undefined part of return value or undefined	not preserved
FPR 1, 3, 5 and 7	undefined	not preserved
FPR 8-15	undefined	preserved

Argument Passing: XPLINK uses a logical argument list consisting of contiguous 32-bit words where some arguments are passed in registers and some in storage. This is similar to FASTLINK (see References and Related Documents on page 7) but with some important differences outlined below.

The argument list is located in the caller's stack frame at a fixed offset (+2112) from the stack register (GPR4). It provides space for all arguments, including those passed in registers. It also includes an extra unused word (4 bytes), which may be required in compatibility situations, at the end of the argument area. Its size is sufficient to contain all the arguments, plus the extra unused word, passed on any call statement from a procedure associated with the stack frame.

Argument Passing

Since support of stack extensions may require copying of argument lists to different storage locations, the argument list must not include arguments that are pointers to locations in the argument list.

The rules for argument passing in registers are as follows:

- The first 3 (4-byte) words of the argument area, regardless of their composition or source, are passed in GPRs 1, 2, and 3, and not in the argument area (although space for these words is reserved in the argument area), except for
  - floating point values, including the real or imaginary constituents of complex types, and

    Note: Not every language supports complex types. For the purposes of argument passing and function return values, in every language every aggregate that is (a) not a union, and (b) contains exactly two floating-point types of the same size (4,8, or 16 bytes) is treated as a complex type.
- Except for arguments in the variable part of a vararg parameter list, up to four floating-point value arguments (the first four) are loaded into floating-point register(s) FPR0, FPR2, FPR4, FPR6 and not passed in the argument area, although space is set aside for these arguments in the argument area. In this fashion up to four floating-point arguments can be passed depending on their precision (single, double, extended), provided each of these:
  - can be fully (considering the constituent parts of complex arguments separately) contained in the remaining available FPRs, and
  - can be represented in the parameter descriptor flags (that is, they are within 15 words of the previous floating point argument in the argument list).

  An extended precision floating point parameter (long double) is always passed in FPR0/2 or FPR4/6. If, for example, the first floating point parameter is double (passed in FPR0) and the second floating point parameter is long double FPR2 will be unused in the parameter list.

  If a floating point argument occupies one of the first three words in the argument area, a prototype for the function is visible, and the argument is not part of the vararg portion of a parameter list, the corresponding GPR's value is undefined on entry to the called function.
- Normally, arguments passed in registers are not stored in the argument list although a slot in the argument list is reserved for them.

  There is an exception to this rule: if it is required that part of a floating point value be stored in the argument area then the entire floating value is stored in the argument area. This situation arises in calls to unprototyped functions or in the vararg portion of a parameter list when part of the floating point parameter is in the first three words of the argument area. For more information, see examples f13, f18, and f20 in Appendix D, "CALL Linkage Argument Examples" on page 657.

For calls to unprototyped functions, where the caller cannot know whether the called function contains a variable (vararg) portion, the argument list must be constructed to allow a call to either a vararg or non-vararg function. In this situation:

- Floating-point arguments in the first 3 words of the parameter list are passed in both GPRs and FPRs; other floating point arguments passed in FPRs are also passed in the argument list.

To support varargs functions, calls to unprototyped functions, and compatibility with older linkages, the minimum argument area length must be 16 bytes. This allows the compiler to map the first three arguments in storage as well as registers and provides for compatibility with linkages that have a hidden last parameter.

Call Descriptor - Parameter Descriptions: The following discussion applies to 31-bit mode only. If any floating point argument is passed in a register the call requires a Call Descriptor, which is pointed to from the call site as described in “Calling Sequence” on page 120. Functions which receive a floating point parameter in a register require Interface Mapping Flags in their PPA1 control blocks as described in “PPA1 in Support of XPLINK” on page 17; this takes the same format as the second half of the call descriptor used for calls to the same function.

There is a 6-bit field in the call descriptor for each parameter passed in a floating point register.

+0	Signed offset, in bytes, to Entry Point Marker					
+4	Linkage	Return Value Adjust	FPR0	FPR2	FPR4	FPR6

Each of these parameter descriptor fields (FPRx) takes the form:

001000	For the FPR0 field only, this indicates an unprototyped call. Floating point arguments are passed both in registers and in the argument area.
000000	floating point register is not part of the argument list
01....	This floating point register occupies 4 bytes in the argument list. It may be a single short floating point parameter or, if followed by 110000, the first half of a short floating point complex argument.
10....	This floating point register occupies 8 bytes in the argument list. It may be a single long floating point argument or, if followed by 110000 or 110001, the first 8 bytes of a longer floating point (including complex) type.
..nnnn	For the bit patterns above, the number of words (0 - 15) between the slot for this argument in the argument list and the slot for the previous (used) floating point register or, for FPR0, the beginning of the argument list.
110000	This floating point register occupies the same number of bytes as the previous register, immediately follows the slot associated with the previous register, and is the next part of a complex type.
110001	This floating point register occupies the same number of bytes (8) as the previous register, immediately follows the slot associated with the previous register, and is the second half of an extended precision floating point argument.

It is the compiler’s responsibility to pass the maximum number of parameters that fit this encoding scheme so that the parameters in registers will match between caller and called function. Note, when calling a vararg routine, no argument in the variable portion of the argument is passed in a Floating Point Register. When calling unprototyped functions floating point parameters are passed in FPRs matching this encoding scheme and are also shadowed, by the caller, in GPRs or memory.

Call descriptors are not required for calls to unprototyped functions whose return value is not examined by the caller.

Function Return Values: Functions return their values according to type:

Function Return Values

1. Integral and pointer data types ≤32 bits in length are widened to 32 bits and returned in GPR3.
2. Floating point types, including complex types, are returned FPR0, FPR2, FPR4 and FPR6, using as many registers as required.

   Note: Not every language supports complex types. For the purposes of argument passing and function return values, in every language every aggregate that is (a) not a union, and (b) contains exactly two floating-point types of the same size (4, 8, or 16 bytes) is treated as a complex type.
3. Aggregates or packed decimal types 1-4 bytes in length are returned left adjusted in GPR1.
4. Aggregates or packed decimal types 5-8 bytes in length are returned left adjusted in GPRs 1 and 2.
5. Aggregates or packed decimal types 9-12 bytes in length are returned left adjusted in GPRs 1, 2, and 3.
6. Any other type is *always completely* returned in a buffer allocated by the caller. The address of this buffer is passed as a hidden first argument. For example struct {double,long double} is returned entirely in a buffer, with no part of the aggregate returned in registers.
7. Functions returning a return value and a reason code will pass the return value in GPR3 and the reason code in GPR2. In this case, both the return value and the reason code must be integral types ≤ 32 bits in length or aggregates consisting of a single integral type ≤ 32 bits in length.

Call Descriptor - Return Values: Calls to functions which return aggregates mapped to registers require a Call Descriptor, which is pointed to from the call site as described in “Calling Sequence” on page 120. Functions which return such aggregates require Interface Mapping Flags in their PPA1 control blocks as described in “PPA1 in Support of XPLINK” on page 17; this takes the same format as the second half of the call descriptor used for calls to the same function.

The call descriptor takes the following form:

+0	Signed offset, in bytes, to Entry Point Marker					
+4	Linkage	Return Value Adjust	FPR0	FPR2	FPR4	FPR6

The Return Value Adjust field takes the following form:

Value		Meaning
00000		Default return adjust. Function returns: 1. nothing, or 2. (Call Descriptor only) an integral or floating point type that is not examined by the caller. There is no need for compatibility code to copy the return value.
00	...	An integral type
	001	An Integral type ≤32 bits, returned in GPR3
	010	An integral type >32 bits, returned in GPR2/GPR3
010	..	A floating point type
	00	A single precision floating point type (4 bytes) returned in FPR0

	01	A double precision floating point type (8 bytes) returned in FPR0
	10	An extended precision floating point type (16 bytes) returned in FPR0/2
011	..	A complex floating point type, including any aggregate containing exactly two floating point values of the same size that is not a union
	00	A single precision complex type (8 bytes) returned in FPR0/2
	01	A double precision complex type (16 bytes) returned in FPR0/2
	10	An extended precision complex type (32 bytes) returned in FPR0/2/4/6
1	....	An aggregate
	0000	An aggregate returned in an area provide by the caller
	nnnn	An aggregate of length nnnn (1-12) bytes, left adjusted in GPRs 1/2/3 as required

Call Descriptor - Linkage Type: Calls using non-XPLINK parameter lists are indicated by the *linkage* field in a call descriptor. Possible values are:

0 XPLINK linkage

1 reserved

2 PL/I: arguments are passed by reference, the last (indicated by its high-order bit) being the address of a return buffer allocated by the caller.

3 Fortran

4 reserved

5 OS: arguments are passed by reference, the last having its high-order bit on. This value is used for COBOL calls if the return type is char, short, or int.

6 reserved

7 COBOL: arguments are passed by reference, the first being the address of a return buffer allocated by the caller and the last having its high-order bit on. This value is not used if the return type is char, short, or int.

Chapter 3. Program Initialization and Termination

Initialization and termination establishes the state of the components of the Language Environment program model supporting multi-language applications. Specifically, this section discusses the initialization and termination of a process, an enclave, and a thread.

Initialization Overview

The program model describes three major constructs of a program structure. The constructs are:

Process
A collection of resources (code and data)

Enclave
A collection of program units consisting of at least one main and zero or more subroutines

Thread
The basic unit of execution and owner of a condition handler, a stack, and the machine state

Initialization provides services which support the construction of the entities described in this model. Brief descriptions of process, enclave, and thread initialization follow.

Process Initialization
Process initialization sets up the framework to manage enclaves and initializes those resources that can be shared among enclaves. It is during process initialization that the **anchor vector** is obtained and initialized. For more information, see Chapter 14, “Anchor Support” on page 439.

Enclave Initialization
Enclave initialization creates the framework to manage enclave-related resources and the threads that run within the enclave. For more information about enclaves, see *z/OS Language Environment Programming Guide*.

Thread Initialization
Thread initialization consists of the acquisition of a stack and the enablement of the condition manager for the thread.

Language Environment provides an interface under batch that establishes the three levels of the Language Environment program model. This interface is CEEINT. For the complete interface description of CEEINT, see “CEEINT Interface” on page 145.

The first user routine to gain control within the enclave is designated as the **main** routine. If user parameters are passed from the host system/subsystem, the user parameters are made available to the main routine. By the time the main routine receives control, the following resources are available:
- Stack storage
- Heap storage
- Condition handling
- Message services
- Math library

© Copyright IBM Corp. 1991, 2002

Termination Overview

The following section covers enclave and process termination.

Enclave Termination

An enclave terminates when one of the following events occurs:

- The last thread in the enclave terminates.
- The **main** routine in the enclave returns to its caller. That is, an implicit STOP or return is done.
- An HLL construct issues a request for the termination of an enclave. For example:
  - C's `abort()`, `raise(SIGTERM)`, or `exit()` functions
  - COBOL's STOP RUN statement
  - COBOL's GOBACK statement in a main program
  - Fortran's STOP statement
  - Fortran's END or RETURN statements in a main program
  - Fortran's CALL SYSRCX, CALL EXIT, CALL DUMP, or CALL CDUMP statement
  - PL/I's STOP function
  - PL/I's EXIT function

When a severity 2 or greater condition remains unhandled at stack frame zero, the thread terminates. Because Language Environment supports only a single thread within an enclave, when the thread terminates due to an unhandled condition, the enclave also terminates.

To support the HLL constructs that terminate the enclave, such as STOP RUN, as well as an implicit STOP, two CWIs, CEETREC, and CEETREN:

- Save the Language Environment termination modifier, and the user's return code
- Raise the Termination Imminent due to Stop (T_I_S) condition (CEETREC only)
- Set the enclave condition token to zero
- Terminate all enclave level member exits and user exits
- Terminate the enclave

Details on how HLLs and Language Environment use the termination facilities appear later. When an enclave terminates, Language Environment releases resources allocated on behalf of the enclave and performs various other activities such as the following:

- Member-specific termination routines for those members that were active during the execution of the program are called.
- Language Environment exception handlers are canceled.
- All modules loaded by Language Environment are deleted.
- All storage obtained by way of Language Environment services is freed.
- The assembler user exit is called for enclave termination.
- All Language Environment control blocks for the enclave are freed.
- Return code and reason code are set in R15 and R0, respectively.
- The program mask and registers are restored to their values at the call to enclave initialization.
- Control is returned to the enclave creator.

In addition to the CWIs CEETREC and CEETREN, Language Environment provides a callable service that issues an abend. This service is a Language Environment-specific callable service known as CEE3ABD. For more information, see *z/OS Language Environment Programming Guide*.

Process Termination

Process termination occurs when the last enclave in the process terminates. Process termination dissolves the structure that kept track of the enclaves within the process and returns to the creator of the process. The PCB and associated resources are released.

Note: Language Environment explicitly relinquishes all resources that were obtained by Language Environment. Routines that obtain resources directly from the host system (such as opening a DCB) need to explicitly relinquish the resource because Language Environment does not have any knowledge of its acquisition.

Putting Initialization/Termination Together

Presented here is an overview of running an application. Many details are omitted, but it demonstrates how all of the pieces fit together. For simplicity, compatibility is not described here. Also, the CICS initialization does not follow the steps provided below; for information on CICS, see Chapter 13, “Subsystem Considerations” on page 397.

- The operating system passes control to the application providing a save area, which we term the O/S Save Area.
- Regardless of which code receives control (compiler-generated code or run-time library), an STM into the O/S Save Area is performed preserving the operating system’s registers.
- The application (probably an HLL library routine) calls CEEINT with R13 pointing to the O/S Save Area (and some other parameters as well).
- While running CEEINT, Language Environment determines the HLLs that are included in the application. For those HLLs present, a language-specific routine (known as an EVENT handler) is loaded and called once for process initialization, and once for enclave initialization. This allows for language-specific initialization activities to occur.
- Upon return from CEEINT, R13 points to the Dummy (or zeroth) DSA, R12 contains the address of the CAA, and R1 contains a pointer to any parameters or a pointer to a list of addresses that point to any parameters that are to be passed to the main routine.
- The HLL library routine allocates a DSA of its own and call the main routine.
- If the user code completes through a HLL construct such as STOP RUN, or if the main routine returns to its caller, the HLL library routine calls the Language Environment service CEETREC or CEETREN which terminate the enclave.
- The return code and reason code are set into R15 and R0 and returned.
- Control is returned through the save area that was passed to CEEINT during Language Environment initialization. That is, the registers are restored from the O/S Save Area, including R14. Then control is returned using R14. In this example, control is returned to the operating system.

Member Interfaces for Initialization

The following section covers enclave initialization. CEEINT is the Language Environment initialization routine that establishes a Language Environment environment (the process and the first enclave within the process) in which an application can run. The interface to CEEINT is described in “CEEINT Interface” on page 145. CEEINT relies on a number of components to be link-edited with the application. Language Environment uses these components to describe the

contents of the application, and to locate other elements contained in the application. A description of these components follows.

CEESTART

The CEESTART CSECT is a required part of each application; it identifies an application. The CEESTART CSECT must be accessible by Language Environment throughout the duration of the Language Environment environment. It cannot be link-edited with a module that is deleted during program execution.

Language Environment produces a default version of CEESTART, but it can also be generated by the member languages. All member languages must have an external reference for CEESTART; this requirement is satisfied if a PPA2 is generated.

A Common CEESTART Format

Language Environment provides a common CEESTART. Essentially, CEESTART can be nominated as the entry point for any other language that provides a CEEMAIN main or fetchable subroutines (and any other language that provides a CEEFMAIN). Entry into CEESTART causes the Language Environment environment to be initialized and execution to be passed to the main routine as specified in CEEMAIN. Entry into CEESTART causes control to be passed to a routine specified in CEEFMAIN given the Language Environment environment is already initialized, and CEEMAIN is not resolved.

Two new formats of CEESTART are provided. One format supports non-XPLINK linkage protocols, Non-XPLINK CEESTART, and the other supports XPLINK linkage protocols, XPLINK CEESTART.

CEESTART Physical Layout

CEESTART is logically divided into five sections. It is intended that the section structure and fields currently defined in CEESTART remain constant over time. It is also intended that necessary changes to CEESTART will be made in an upwardly compatible manner, so as to preserve the structure and fields as currently defined. The format of the Non-XPLINK CEESTART is shown in Figure 48 on page 131 and the format of the XPLINK CEESTART is shown in Figure 49 on page 134.

```
Section 1
          CEESTART  CSECT
          CEESTART  AMODE   ANY
          CEESTART  RMODE   ANY
                    EXTRN   CEEBETBL
                    EXTRN   CEEROOTA
                            or
                    WXTRN   CEEROOTA
                    WXTRN   CEEMAIN          Library copy
                    WXTRN   CEEFMAIN

Section 2

000000              NOP     0

000004              NOP     2
000008              STM     14,12,12(13)
00000C              BALR    3,0
                    USING   *,3
00000E              B       AROUND
          SIGNATUR  EQU     *
000012    SIG_LEN   DC      XL2(14)
000014    SIG_CEE   DC      X'CE'
000015    SIG_ID    DC      X'mm'
000016    SIG_VER   DC      X'vv'
000017    SIG_REL   DC      X'rr'
000018    SIG_PL    DC      A(PLIST)
00001C    SIGN_EYE  DC      CL8'CEESTART'
000024              DC      H'0'
          AROUND    EQU     *

Section 3           L       R15,AROOT_A
                    BALR    R0,R15

Section 4

x+00      PLIST     DS      0F
x+04      ACEEMAIN  DC      A(CEEMAIN)     or 0
x+08                DC      A(0)           Reserved
x+0C                DC      A(0)           Reserved
x+10                DC      A(0)           Reserved
x+14                CXD
x+16      VMARKER   DC      H'-1'
x+18      PLISTEN   DC      AL2(PLIST_LEN)
x+1C                DC      A(0)           Reserved
x+20                DC      A(0)           Reserved
x+24                DC      A(0)           Reserved
x+28                DC      A(0)           Reserved
x+2C                DC      A(0)           Reserved
x+30                DC      A(0)           Reserved
x+34                DC      A(0)           Reserved
x+38      SIG_ADDR  DC      A(SIGNATUR)    Reserved
x+3C                DC      A(0)           or 0
x+40      FMAIN     DC      A(CEEFMAIN)    Reserved
x+44                DC      A(0)           Reserved
x+48                DC      A(0)
x+4C      BETBL     DC      A(CEEBETBL)
          PLIST_LEN EQU*-PLIST

Section 5 AROOT_A   DC      A(CEER00TA)
                    END     CEESTART
```

Figure 48. Non-XPLINK CEESTART Format

Section 1

Declarations for the entry points and external routines.

Section 2

Additional entry points and signature. The signature is used for identification and provides access to the parameter list found in Section 4.

mm Member identifier of the creator.

The HLL compilers should set this value to their corresponding member identifier.

vv Member-defined version level; Language Environment has no dependencies on it.

rr Member-defined release level; Language Environment has no dependencies on it.

Section 3

Executable code that invokes the bootstrap routine CEEROOTA. Control is not returned to CEESTART once the bootstrap routine is invoked. It is intended that minimal logic is contained within CEESTART and that the structure and content of CEESTART remains constant over time.

Section 4

Parameter list that is passed to the bootstrap routine. This parameter list is also intended to remain unchanged in future releases.

ACEEMAIN

This points to the CEEMAIN CSECT which contains the address of the main routine. This spot was used for the address of PLIMAIN in PLISTART.

PRV_LEN

This is the length of the pseudo register vector. This field is retained for compatibility. Language Environment does not allocate the PRV during initialization.

VMARKER

This is an identifying characteristic for the CEESTART PLIST.

PLISTLEN

This indicates the number of bytes contained within this PLIST.

SIG_ADDR

This points to the CEESTART signature contained in section 2.

FMAIN

This points to the CEEFMAIN CSECT which is used during fetch or dynamic load.

BETBL

This points to the Language Environment owned externals table. It is through the externals table that Language Environment passes load module information into initialization.

Language Environment does not interrogate unidentified fields; they are considered to be language-specific.

Section 5

Bootstrap routine addresses. This provides the routine address to the initialization bootstrap routine.

AROOT_A

This is the address of the bootstrap routine which corresponds to a CEESTART entry. The Language Environment library copy of

CEESTART has a WXTRN to CEEROOTA and requires that CEEROOTA be INCLUDEd during link-editing of the application. CEEROOTA can be excluded from applications where CEESTART is not the entry point.

Initialization

```
Section 1
          CEESTART   CSECT    ANY
          CEESTART   AMODE    ANY
          CEESTART   RMODE    CEEBETBL        Complier
                     EXTRN    CEEROOTD        Compiler
                     EXTRN    or
                              CEEROOTA        Non-library copy
                     WXTRN    CEEROOTD        Non-library copy
                     WXTRN    CEEMAIN         Non-library copy
                     WXTRN    CEEFMAIN        Non-library copy
                     WXTRN

Section 2

000000                NOP     0

000004                NOP     2
000008                STM     14,12,12(13)
00000C                BALR    3,0
                      USING   *,3
00000E                B       AROUND
          SIGNATUR    EQU     *
000012    SIG_LEN     DC      XL2(14)
000014    SIG_CEE     DC      X'CE'
000015    SIG_ID      DC      X'mm'
000016    SIG_VER     DC      X'vv'
000017    SIG_REL     DC      X'rr'
000018    SIG_PL      DC      A(PLIST)
00001C    SIGN_EYE    DC      CL8'CEESTART'
000024                DC      H'0'
          AROUND      EQU     *

Section 3             L       R15,AROOT_D     Compiler
                      BALR    R0,R15          Compiler
                              or
                      L       15,AROOTA       Library Copy
                      LTR     15,15           Library Copy
                      BNZ     BALR            Library Copy
                      ABEND   4093,REASON=112
                                              Library Copy
                      BALR    BALR 0,15       Library Copy

Section 4

x+00      PLIST       DS      0F
x+04      ACEEMAIN    DC      A(CEEMAIN)      or 0
x+08                  DC      A(0)            Reserved
x+0C                  DC      A(0)            Reserved
x+10                  DC      A(0)            Reserved
x+14                  CXD
x+16      VMARKER     DC      H'-1'
x+18      PLISTEN     DC      AL2(PLIST_LEN)
x+1C                  DC      A(0)            Reserved
x+20                  DC      A(0)            Reserved
x+24                  DC      A(0)            Reserved
x+28                  DC      A(0)            Reserved
x+2C                  DC      A(0)            Reserved
x+30                  DC      A(0)            Reserved
x+34                  DC      A(0)            Reserved
x+38      SIG_ADDR    DC      A(SIGNATUR)     Reserved
x+3C                  DC      A(0)            or 0
x+40      FMAIN       DC      A(CEEFMAIN)     Reserved
x+44                  DC      A(0)            Reserved
x+48                  DC      A(0)
x+4C      BETBL       DC      A(CEEBETBL)
          PLIST_LEN   EQU*-PLIST

Section 5 AROOT_A     DC      A(CEEROOTA)     Complier
                              or
          AROOT_D     DC      A(CEEROOTD)     Library Copy
                      END     CEESTART
```

Figure 49. XPLINK CEESTART Format

Section 1

Declarations for the entry points and external routines.

Section 2

Additional entry points and signature. The signature is used for identification and provides access to the parameter list found in section 4.

mm Member identifier of the creator.

The HLL compilers should set this value to their corresponding member identifier.

vv Member-defined version level; Language Environment has no dependencies on it.

This contains a version level corresponding to the CEESTART defined by Language Environment or the compiler.

rr Member-defined release level; Language Environment has no dependencies on it.

This contains a release level corresponding to the CEESTART defined by Language Environment or the compiler.

Section 3

Executable code that invokes the bootstrap routine CEEROOTA. Control is not returned to CEESTART once the bootstrap routine is invoked. Minimal logic is contained within this section of CEESTART.

Section 4

Parameter list that is passed to the bootstrap routine. This parameter list is also intended to remain unchanged in future releases.

ACEEMAIN

This parameter list will typically not change in future releases. It is intended that any necessary changes will be made in an upwardly compatible manner, preserving the position and meaning of the current fields. This spot was used for the address of PLIMAIN in PLISTART.

PRV_LEN

This is the length of the pseudo register vector. This field is retained for compatibility. Language Environment does not allocate the PRV during initialization.

VMARKER

This is an identifying characteristic for the CEESTART PLIST.

PLISTLEN

This indicates the number of bytes contained within this PLIST.

SIG_ADDR

This points to the CEESTART signature contained in section 2.

FMAIN

This points to the CEEFMAIN CSECT which is used during fetch or dynamic load.

BETBL

This points to the Language Environment owned externals table. It is through the externals table that Language Environment passes load module information into initialization.

Language Environment does not interrogate unidentified fields; they are considered to be language-specific.

Section 5

Bootstrap routine addresses. This provides the routine address to the initialization bootstrap routine.

AROOT_A

This is the address of the bootstrap routine which corresponds to a CEESTART entry. The Language Environment library copy of CEESTART has a WXTRN to CEEROOTA and requires that CEEROOTA be INCLUDEd during link-editing of the application. CEEROOTA can be excluded from applications where CEESTART is not the entry point.

CEEFMAIN

CEEFMAIN, as shown in Figure 50, contains the address of fetchable routines that gain control from CEESTART if the Language Environment environment is already initialized and CEEMAIN is not resolved.

Address (fetchable procedure entry point)
0

Figure 50. Format of CEEFMAIN

XPLINK RENT CEEFMAIN

-8	C’CEEMAIN’			
-4				
+0	0x02	0x00	0x00	0x01
+4	A(fetchable entry point)			
+8	Q(environment), or -1 if no environment			

XPLINK NORENT CEEFMAIN

-8	C’CEEMAIN’			
-4				
+0	0x03	0x00	0x00	0x01
+4	A(fetchable entry point)			
+8	A(environment)			

CEEMAIN

CEEMAIN has been extended; see Figure 51 on page 137 for the format of the old CEEMAIN and the extensions. Bits 30 and 31 are used to differentiate between the two. The 'ctl' field will be one for the extended CEEMAIN.

EXTENDED CEEMAIN

				33 01
1	ctl	0	0	01
2	A (main)			
3	A (INPL)			

OLD CEEMAIN

		33 01
1	A (main)	00
2	0	

Figure 51. Format of CEEMAIN

XPLINK RENT CEEMAIN

-8	C’CEEMAIN’			
-4				
+0	0x02	0x00	0x00	0x01
+4	A(main entry point)			
+8	A(EDCINPL)			
+12 0x0c	Q(environment), or -1 if no environment			

XPLINK NORENT CEEMAIN

-8	C’CEEMAIN’			
-4				
+0	0x03	0x00	0x00	0x01
+4	A(main entry point)			
+8	A(EDCINPL)			
+12 0x0c	A(environment)			

CEESTART Operation

The Language Environment bootstrap routine takes the actions as described in Table 20.

Table 20. Bootstrap behavior

Enclave Initialized?	MAIN?	FMAIN?	Comments
No	Yes	No	Initialize the enclave and execute MAIN
No	Yes	Yes	Initialize the enclave and execute MAIN
No	No	Yes	Abend 4093-112
No	No	No	Abend 4093-112
Yes	Yes	No	Raise the condition CEE393
Yes	Yes	Yes	Raise the condition CEE396
Yes	No	Yes	Call the FMAIN subprogram

Table 20. Bootstrap behavior (continued)

Enclave Initialized?	MAIN?	FMAIN?	Comments
Yes	No	No	Raise the condition CEE392

Notes:

1. The enclave can either be the initial enclave or a nested enclave. **Enclave Initialized** is no if `CEEINT` has not yet been called for that enclave.
2. MAIN refers to the address of the main routine contained in the PLIMAIN or CEEMAIN CSECTs.
3. FMAIN refers to the address of the fetchable entry contained in the CEEFMAIN CSECT.

When CEESTART is invoked from within a Language Environment environment, and CEEMAIN or PLIMAIN is resolved, an error is raised. The bootstrap behavior should also be reflected in `FETCH` limitations.

Note: The address of the main routine can potentially be found in two places: CEEMAIN and within the Initialization Parameter List (INPL). Language Environment honors the address found in the INPL.

Main Routine Invocation Event

When the environment is initialized by CEESTART, a new event allows the CEESTART owning member to invoke the main routine. The new event is provided for compatibility support. The interface to the Main Routine Invocation Event is shown in “Event Code 14 — Main Routine Invocation Event” on page 463.

Language Environment allocates a DSA in order to call the main routine. The handler for event 14 must handle any AMODE switching required to invoke the MAIN routine.

After control returns from the main program and optional FINISH processing has completed, event 14 invokes CEETREN to terminate the enclave.

CEESIOP — Set Interrupt Option Service

The CEESIOP CWI is invoked to set the PL/I options INTERRUPT or NOINTERRUPT during enclave initialization.

Syntax

void (*CEECELVBSIOP) (*on, [fc]*)

```
INT4      *on
FEED_BACK *fc;
```

CEECELVBSIOP

Call this CWI interface as follows:

```
L     R15,CEECAACELV-CEECAA(,R12)
L     R15,3384(,R15)
BALR  R14,R15
```

on **(input)**

Is not equal to 0 to set the INTERRUPT option.

fc **(output/optional)**

A feedback code to indicate the result of this call; possible values are:

CEE000	Message	Success.
CEE3GV	Message	The installation default for the run-time option *option* could not be overridden.

Usage Notes:

1. Unless the INTERRUPT option is marked `non-options CSECT`, this service can override the setting in the default options CSECT and it can be overridden by any other source of options.
2. The source of this option is marked programmer default in the Language Environment options report.
3. This routine only have affect in a single-language application. If this routine is called in a multiple-language application, it has no effect and CEE000 is returned.

Signature CSECT

Each language called by Language Environment for member-specific initialization and termination must generate a CEESG*nnn* signature CSECT. The signature CSECT denotes the presence of a member in the application. In addition, the signature CSECT provides a mechanism for the member to convey user load module information to the dynamically loaded member event handler. The *nnn* value is the decimal member number for each language.

In addition, the signature CSECT can contain a list of member identifiers upon which this current member is dependent. Language Environment orders these dependencies and calls the member-specific initializations in the dependent order. Termination is performed in the reverse order. Language Environment assumes that circular dependencies do not occur.

The format of the signature CSECT is shown in Figure 52. The fields SG_MBR1 and SG_MBR2 are optional and provide a vehicle for the member to pass member-specific load module related information to the member-specific handler during initialization (or any other time). During enclave initialization, the signature CSECT can be accessed indirectly through the initialization parameter list. Language Environment does not interrogate, alter, or check for the presence of SG_MBR1 or SG_MBR2. It is the member's responsibility to allocate SG_MBR1 and SG_MBR2, and to access these fields based upon their presence.

```
CEESGnnn CSECT
CEESGnnn AMODE ANY
CEESGnnn RMODE ANY
         DC    CL4'Snnn'      Eye catcher
         DC    H'20'          Length of CSECT
         DC    H'1'           Version id
         DC    H'0'           Number of dependent member IDs
         DC    H'0'           Offset from the start of the CSECT...
*                             ...to the one-byte member IDs
SG_MBR1  DC    A              Reserved for member's use
SG_MBR2  DC    A              Reserved for member's use
```

Figure 52. Signature CSECT Format

CEEBETBL — Language Environment Externals Table

The CEEBETBL CSECT, shown in Figure 53 on page 140, is linked with any Language Environment-enabled application program. The CSECT is defined by the

CEEBETBL module. The externals table contains various external references to entities in the executable program, which allows Language Environment to locate entities if they exist in the executable program. For compatibility with old load modules, a HLL can construct its own CEEBETBL. The CEEBETBL contains the following information:

- A fullword number containing the number of fullwords in CEEBETBL, including this word.
- The address of the assembler user exit (CEEBXITA) or zero. If a zero is discovered, the installation wide assembler user exit, which is linked with the Language Environment dynamically loaded routines, is called.
- The address of the HLL User Exit (CEEBINT) or zero. If a zero is discovered, the HLL user exit is not called.
- The address of the language list (CEEBLLST). This is a vector of weak external references for the signature CSECTs. When an entry in the vector is nonzero, the corresponding HLL is present in the executable program and its language-specific initialization is performed. (This is provided by Language Environment.)
- The address of the user declared option table or zero. If a zero is discovered, then user-defined run-time options are not available (for example, link-edited with the application).
- The address of the termination stub that releases the resources obtained in CEEINT. Essentially, the termination stub deletes the routine loaded by CEEINT and returns using R14 found in the save area provided on entry to CEEINT.
- The address of the product unique binding table. This table contains the name for the first dynamically loaded run-time library module.
- The address of the loader information table (IEWBLIT), which is created by the Binder for modules that were built without using the prelinker. For example, these modules would include reentrant C programs and all C++ programs. If the Binder does not need to create this table, this field will contain a zero (0).

```
CEEBETBL CSECT ,
CEEBETBL AMODE ANY
CEEBETBL RMODE ANY
         WXTRN CEEUOPT
         WXTRN CEEBXITA
         WXTRN IEWBLIT
ETBL_A_ENTRIES  DC F'10'         Number of fullwords in this table
ETBL_A_CEEBXITA DC V(CEEBXITA)   Assembler User Exit
ETBL_A_CEEBINT  DC V(CEEBINT)    HLL User Exit
ETBL_A_CEEBLLST DC V(CEEBLLST)   Language List
ETBL_A_CEEUOPT  DC V(CEEUOPT)    User declared run-time option table
ETBL_A_CEEBTRM  DC V(CEEBTRM)    Termination stub routine address
ETBL_A_IBMXXITA DC A(0)          Holds address of PL/I or C user exit
ETBL_A_CEEBPUBT DC V(CEEBPUBT)   Unique binding table
ETBL_A_IEWBLIT  DC V(IEWBLIT)    Loader information table (or 0)
                DC A(0)          Reserved
         END
```

Figure 53. CEEBETBL CSECT Format

Event Handler Routines

Each member in an enclave that provides a signature CSECT is also required to have an event handler routine. The load name of this routine must be CEEEV*nnn*, where *nnn* is the decimal member number. As an example, COBOL's event handler

routine name is CEEEV005. This routine must be available to the Language Environment load service. All calls of the event handlers use an OS-style parameter list. R1 points to an address list which points to the specific parameters. The event handlers are always called in AMODE 31. The interface to the event handler routines for member-specific initialization and termination is described in “Member Event Codes for Initialization and Termination” on page 169. For each of the event handlers, see “Event Handler Calls” on page 445.

Language List

The member list is a vector of WXTRNs of the signature CSECTs and is generated by Language Environment. Language Environment checks for the presence of a member in the application in the language list. If the member represented by a specific offset in this list is not present or requires no special initialization, its WXTRN is unresolved. If the WXTRN is resolved, then Language Environment dynamically loads the event handler routine for that member, and stores the address in the member list. Language Environment then calls the event handler, passing an **event code** to the event handler routine. The language list has zero through seventeen entries statically allocated in Language Environment. Language Environment uses the number of entries in the language list as a loop counter when it is necessary to loop through the language list entries. Refer to the LLISTENT as the number of valid entries within the language list. The format of the language list is shown in Figure 54 on page 142.

Language List

```
CEEBLLST CSECT ,     LANGUAGE ENVIRONMENT LANGUAGE LIST HEADER
CEEBLLST RMODE ANY
CEEBLLST AMODE ANY
         DC    CL4'LLHD'
         DC    AL2(CEELLIST-CEEBLLST)   Length of list header
         DC    AL2(1)                   Lang Env list version number
         DC    A((LLISTEND-CEELLIST)/4) Number of list entries
         DC    A(CEELLIST)              Pointer to the language list
CEELLIST DS    0D            Lang Env language list
         WXTRN CEESG000
         DC    A(CEESG000)   00 RSVD
         WXTRN CEESG001
         DC    A(CEESG001)   01 Language Environment
         WXTRN CEESG002
         DC    A(CEESG002)   02 RSVD
         WXTRN CEESG003
         DC    A(CEESG003)   03 C/C++
         WXTRN CEESG004
         DC    A(CEESG004)   04 RSVD
         WXTRN CEESG005
         DC    A(CEESG005)   05 COBOL
         WXTRN CEESG006
         DC    A(CEESG006)   06 Debug Tool
         WXTRN CEESG007
         DC    A(CEESG007)   07 Fortran
         WXTRN CEESG008
         DC    A(CEESG008)   08 DCE
         WXTRN CEESG009
         DC    A(CEESG009)   09 RSVD
         WXTRN CEESG010
         DC    A(CEESG010)   10 PL/I
         WXTRN CEESG011
         DC    A(CEESG011)   11 VisualAge PL/I for OS/390
         WXTRN CEESG012
         DC    A(CEESG012)   12 Berkeley Sockets
         WXTRN CEESG013
         DC    A(CEESG013)   13 RSVD
         WXTRN CEESG014
         DC    A(CEESG014)   14 RSVD
         WXTRN CEESG015
         DC    A(CEESG015)   15 assembler
         WXTRN CEESG016
         DC    A(CEESG016)   16 RSVD
         DC    A(0)          Dummy entry must contain X'00'
         DS    0D            This boundary requirement is mandatory.
*                            It is needed to save processing time when
*                            CEE is being initialized.
LLISTEND DC    A(0)          Mark the end of list
         END
```

Figure 54. CEEBLLST Format

Initialization Parameter List

The initialization parameter list is presented in two parts. The first part contains only two items. They are:

1. The address of a fullword which contains the address of the entry point. For HLLs that do not have multiple entry points, the entry point is the address of the main routine.
2. An offset from offset 0 of the first part of the initialization parameter list to the second part of the initialization parameter list. The offset is treated as a signed offset.

The second part of the initialization parameter list consists of the following information:

1. Number of entries in this part, including this counter. This number is 6 or 7.
2. Address of a fullword containing the address of the main entry point of the application. In COBOL, the fullword contains the primary entry point of the compile unit. This is provided in the user exit.
3. Address of CEESTART, or zero.
4. Address of the CEEBETBL CSECT.
5. A fullword of the member identifier that created this instance of the initialization parameter list.
6. A fullword that is used by the member identified by the above member ID.
7. The main-opts word indicates attributes of the main program which is being initialized. The main-opts word is optional. If omitted, the number of entries is then 6. Also, if omitted, the information for the main-opts word is obtained by calling the event handler whose member identifier is in the INPL.

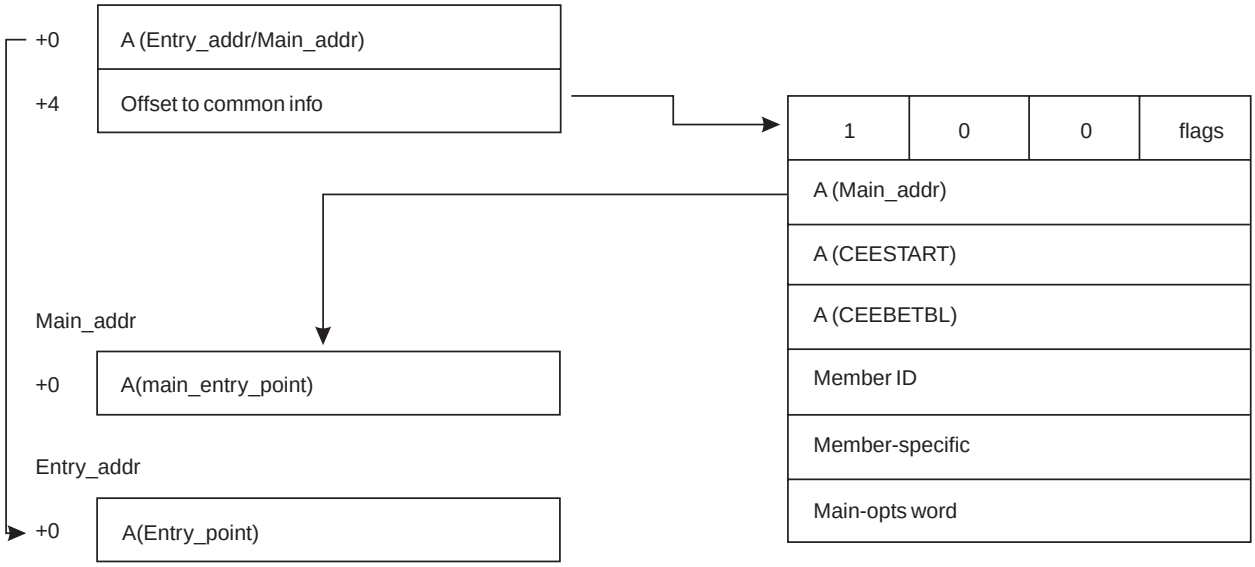

Figure 55. Format of the Initialization Parameter List

Updated INPL

Figure 56 on page 144 shows the updated format of the initialization parameter list (INPL).

Language List

Updated INPL

1	1	0	0	flags
2	A (Main_addr)			
3	A (CEESTART)			
4	A (CEEBETBL)			
5	Member ID			
6	Member-specific			
7	Main-opts word			

Old INPL

1	1	0	0	6 or 7
2	A (Main_addr)			
3	A (CEESTART)			
4	A (CEEBETBL)			
5	Member ID			
6	Member-specific			
7	Main-opts word (optional)			

Figure 56. Updated Format of the Initialization Parameter List

The Language Environment initialization parameter list is defined, as follows:

- The first word of the INPL is as follows:
  1. Byte 0 of the INPL contains a control level set to 0 or 1.
  2. Byte 3 of the INPL is dependent on the value of the control level.
     - For control level 0, byte 3 is the total number of words in the INPL; this value is either 6 or 7 (the seventh word of the INPL is optional for control level 0). An INPL that is marked control level 0 is identical in format to, and is compatible with, the Version 1 Release 1.1 level INPL.
     - For control level 1, byte 3 contains flags. The seventh word of the INPL is always present for control level 1. The flags are defined as follows:

```
reserved      B'xxxxxx..'  must be zero
mult_environ  B'......x.'  0 - not enabled for multiple environments
                           1 - enabled for multiple environments
mainops_valid B'.......x'  0 - not valid, call main-opts event
                           1 - valid, use word 7
```

       The `mainopts_valid` flag must contain a 0, which indicates that the main-opts event must be invoked, or a 1, which indicates the main-opts event must not be invoked. INPLs marked control level 1 are fixed length and contain the main-opts word field.

       The `mult_environ` flag must contain a value of 0 if there must be only one Language Environment-enabled application in the Task Control Block (TCB). If it is set to 1, a complete new environment, including region, process, enclave, and thread, will be unconditionally created. The following applies:

       a. The TRAP and INTERRUPT run-time options are ignored. The application will always run as if TRAP(OFF) and INTERRUPT(OFF). The restriction is necessary because the ESTAE/ESTAX that gets control for errors is always the last one issued, but with multiple environments (which can be preempted and scheduled asynchronously) it is not possible to have the last error exit always match the currently executing environment.
       b. Anchor lookup must not be performed, either through explicit calls to CEEARLU or the documented assembler anchor lookup code

sequence. For Language Environment that means it will not be able to create nested enclaves. These translate into the following application restrictions:

1) No COBOL programs can run in multiple environments.
2) POSIX functions cannot be used in multiple environments.
3) Debugger cannot be used in multiple environments.
4) Nested enclaves cannot be created in multiple environments. The following are not legal:
   - SVC LINK from assembler
   - PL/I Fetchable main
   - C system() function
5) Applications that rely on error handling semantics associated with TRAP(ON) will not be able to run in multiple environments.

- The second through sixth words of the INPL are unchanged from the INPL format in Language Environment Version 1 Release 1.1.
- The seventh word of the INPL (the main-opts word) is always present in the INPL if the control level is 1 and is optionally present if the INPL control level is 0.
  – Byte 0 (Execops) of the seventh word is as follows:

```
prealloc      B'x.......'  0 Does not require preallocated storage event
                          1 Requires preallocated storage event
thdappl       B'.x......'  0 Does not require threading features to run
                          1 Requires threading features to run
defoptreq     B'..x.....'  0 Does not require default options event
                          1 Requires default options event
execops_off   B'...x....'  0 Execops
                          1 Noexecops
reqcmdequ     B'....x...'  0 Does not require command line equivalent process
                          1 Require command line equivalent process
invmaindir    B'.....x..'  0 Invoke main through event handler
                          1 Invoke main directly
inheritop     B'......x.'  0 Merge run-time options
                          1 Inherit Run ops
propcond      B'.......x'  0 Ignore unhandled conditions
                          1 Propagate conditions
```

  – Byte 1 of Word 7 is the PLIST (parameter list) style with the following values:

```
CEEINPL_PLIST_CMS  Fixed(8) Constant(1)
CEEINPL_PLIST_HOST Fixed(8) Constant(2)
CEEINPL_PLIST_MVS  Fixed(8) Constant(3)
CEEINPL_PLIST_TSO  Fixed(8) Constant(4)
CEEINPL_PLIST_CICS Fixed(8) Constant(5)
CEEINPL_PLIST_IMS  Fixed(8) Constant(6)
CEEINPL_PLIST_OS   Fixed(8) Constant(7)
```

  – Byte 2 and 3 of Word 7 are reserved

CEEINT Interface

CEEINT is link-edited with the user's load module. For fully Language Environment-enabled main programs without old object code no system service requests (such as GETMAINs and LOAD) can occur prior to calling the Language Environment enclave initialization routine.

CEEINT

Call this CWI interface as follows:

```
L     R15,=V(CEEVINT)
BALR  R14,R15
```

CEEINT Interface

Members should follow standard calling conventions by saving the registers in the application's caller's save area and then use the following register interface to call CEEINT:

R0 Contents should be the same as when the application was called.

R1 Contains the address of the application's parameter list. The parameter list can be a standard (for example, run-time options and user parameters) OS-style PLIST (on z/OS), a TSO CPPL, or a standard OS-style call interface.

R2 Contains the address of the initialization parameter list. The initialization parameter list is designed so that it can be statically built by the compiler. (For example, COBOL could add the initialization parameter list in the constant area following the BRANCH at the start of the compilation unit.) Language Environment does not alter the contents of the initialization parameter list. If, for example, Language Environment needs to fold the run-time options to uppercase, this is performed in a Language Environment-obtained work area.

When the member event handler is called for enclave initialization the initialization parameter list is passed to the event handler as an argument.

For compatibility support the initialization parameter list can be dynamically constructed. To do so, storage must be obtained prior to Language Environment services being available.

The initialization parameter list is shown in Figure 55 on page 143 and discussed in "Initialization Parameter List" on page 142.

R13 Contains the address of the main program's caller's save area, usually the operating system's save area. Note that during termination, this save area is used as the source of register contents and the return address when Language Environment has completed its termination processing.

R14 Return address register.

R15 Entry address register.

The registers upon return are:

R0 Unknown.

R1 Contains the address of the application's parameter list without the run-time options or the slash. This can contain the original R1 upon entry. In some cases, Language Environment constructs the application's parameter list.

R2–R7
Language Environment work registers. These registers' contents are not preserved across the interface.

R8–R11
These registers' contents are preserved.

R12 Contains the address of the CAA.

R13 Contains the address of the **dummy** DSA for return codes of 0 or 8. The register remains unchanged for return code 4.

R15 Contains the return code from CEEINT, which is:

- **00** Successful initialization.
- **04** Environment already established, no implicit enclave created. R13 remains unchanged. All other registers are as shown above.
- **08** Environment already established, implicit enclave created. R13 points to the dummy DSA within the new enclave. All other registers are as shown above.

Initialization Failures

If CEEINT cannot successfully initialize the environment, it abends with completion code 4093. The reason code associated with the abend 4093 indicates the cause of the failure. The reason codes are described in *z/OS Language Environment Debugging Guide*.

Usage Notes:

1. R13 points to the dummy DSA in the user stack for return codes 00 and 08. The Next Available Byte (NAB) of this DSA points to the beginning of the stack. For return codes 00 and 08 from CEEINT, a DSA can be allocated using the code sequence shown in Figure 32 on page 84. The application should not store register values into the dummy DSA. The user can store a forward chain into the dummy DSA, and can allocate another DSA using the stack allocation code found in Figure 32 on page 84.
2. The back chain of the dummy DSA points to the save area that was passed by the caller of initialization.

CEEBCRLM — Cancel/Release Load Module

This CWI is to be used by member languages before canceling or releasing a load module that had been previously added to an enclave.

Syntax

void CEEBCRLM (*token*, *lang_list*, *[fc]*)

```
POINTER     *token;
POINTER     *lang_list;
FEED_BACK   *fc;
```

CEEBCRLM

Call this CWI interface as follows:

```
L     R15,CEECAACELV-CEECAA(,R12)
L     R15,3984(,R15)
BALR  R14,R15
```

token **(input)**

The token returned by the CEEPLOD2 service when the module was loaded.

lang_list **(input)**

The pointer to the language list; it could be one of following:

1. The language list found in the load module and returned by the CEEBADDM CWI.
2. The language list found by a member and input to the CEEBMBR CWI.
3. Zero if the load module was not recognized by CEEBADDM or the language list was not saved from 1 or 2.

fc **(output/optional)**

The parameter into which the callable service feedback code is placed. The following conditions might result from this service.

CEE000	Severity	0
	Msg_No	N/A
	Message	The service completed successfully.

CEE39K	Severity	1
	Msg_No	3380
	Message	The load module was not recognized Language Environment.
CEE38N	Severity	4
	Msg_No	3351
	Message	An event handler was unable to initialize properly.

Usage Notes:

1. Language Environment recognizes the following entry point styles:
   - C/C++ for MVS/ESA-style PPA
   - C/370-style PPA
   - Language Environment routine entry layout (see “Routine Layout” on page 4)
   - Language Environment-format CEESTART
   - Language Environment AWI stubs
2. If *lang_list* is zero and the entry style is not recognized, all members that are currently active within the enclave will be called with the cancel/release load module event.
3. If *lang_list* is zero and the entry style is recognized, or *lang_list* is provided, all members that are present in the load module will be called with the cancel/release load module event.
4. CEEBCRLM should be called by the members before using the CEEPDEL2 service to delete the module. For more information about this service, see “CEEPDEL2 — Enclave Level Delete Service” on page 277.

CEEBSENM — Set the Enclave Name

This CWI sets the name for the current enclave. The name is used in reports such as the options report and the dump output.

Syntax

void (*CEELIBVBSENM) (*enclave_name, [fc]*)

```
VSTRING    *enclave_name;
FEED_BACK  *fc;
```

CEELIBVBSENM

A field in the Language Environment LIBVEC that points to the Set Enclave Name Routine (CEEBSENM).

Call this CWI interface as follows:

```
L     R15,CEECAACELV-CEECAA(,R12)
L     R15,3360(,R15)
BALR  R14,R15
```

enclave_name **(input)**

The name by which the enclave is to be known.

fc **(output/optional)**

The parameter in to which the callable service feedback code is placed. The following conditions might result from this service.

CEE000	Severity	0
	Msg_No	N/A
	Message	The service completed successfully.
CEE394	Severity	1
	Msg_No	3364
	Message	The enclave name was truncated by the enclave naming service during initialization.
	Explanation	The enclave naming service is used by the language in which the main program is written during enclave initialization. It was passed a name longer than 32 characters. This is an internal problem.
	Programmer Response	Contact your service representative.
	System Action	The truncated name is used as the enclave name.
CEE395	Severity	3
	Msg_No	3365
	Message	The enclave naming service was called, but not during enclave initialization, or not by a member corresponding to the main program.
	Explanation	The enclave naming service is used by the language in which the main program is written during enclave initialization. It was used in an illegal manner. This is an internal problem.
	Programmer Response	Contact your service representative.
	System Action	The requested service is not performed and the enclave name might not be correct.

Usage Notes:

1. This service can only be called during event handler processing of the Enclave Create event.
2. This service can only be called by the member corresponding to the language of the main routine, as specified in the initialization parameter list. A member can determine if it corresponds to the language of the main routine by checking the field in the initialization parameter list, which contains the member identifier of the creator of the initialization parameter list.
3. If the name is longer than 32 characters it is truncated to 32 characters and CEE394 is returned or signaled.
4. If this service is not used the name is taken from the main routine, if possible, or the members are polled for the name.

CEEBSRCM — Set the Enclave Return Code Modifier

In at least two cases, it is necessary to increase the enclave return code modifier to a specified value if the existing value is less than that value. One case, for example, is during termination when the Fortran library closes files that have not yet been closed. During this process an error might occur but the remaining files still need to be closed. On each occurrence of one of these errors the return code modifier needs to be made at least as high as the severity of the condition.

CEEBSRCM

This CWI will set the return code modifier for the enclave during enclave termination. The return code modifier will first be established by the enclave termination services (CEETREN or CEETREC) or set by condition handling when an unhandled condition causes termination of the enclave. Once established, the return code modifier can only be increased.

Syntax

void (*CEELIBVBSRCM) (*rc_modifier, [fc]*)

```
INT4       *rc_modifier;
FEED_BACK  *fc;
```

CEELIBVBSRCM

A field in the Language Environment LIBVEC that points to the Set Enclave Return Code Modifier Routine (CEEBSRCM).

Call this CWI interface as follows:

```
L     R15,CEECAACELV-CEECAA(,R12)
L     R15,3012(,R15)
BALR  R14,R15
```

rc_modifier **(input)**

The enclave return code modifier must in the range of 1 to 4 inclusive.

fc **(output/optional)**

Is an optional parameter in which the callable service feedback code will be placed. The following conditions may result from this service.

CEE000	Severity	0
	Msg_No	N/A
	Message	The service completed successfully.
CEE38S	Severity	2
	Msg_No	3356
	Message	The *rc_modifier* must be in the range of 1 through 4. The return code modifier was not changed.
	Explanation	The *rc_modifier* was not in the range of 1 through 4. The return code modifier that was first established by the enclave termination services or by the condition handling was kept.
	Programmer Response	Provide a valid return code modifier.
	System Action	No system action is taken.
CEE38T	Severity	2
	Msg_No	3357
	Message	The service was invoked outside of the member enclave termination; no action was taken.
	Explanation	CEEBSRCM is to be called during the member enclave termination; it was invoked outside of the member enclave termination.
	Programmer Response	Ensure that the routine is called during the enclave termination.
	System Action	No system action is taken.

Usage Notes:

1. This routine is intended to provide a mechanism to update the return code modifier when errors are encountered during enclave termination.
2. This routine will only allow the return code modifier to be increased.

CEEPGFD — Get Function Pointer

The CEEPGFD CWI returns a function pointer to a function that resides in a separate load module. Functions that are called by function pointers that are created by CEEPGFD will have access to the writable static area, if it exists.

Syntax

void CEEPGFD (**load_addr*, **func_pointer*, [*fc*])

```
POINTER     *load_addr;
POINTER     *func_pointer;
FEED_BACK   *fc;
```

CEEPGFD

Call this CWI interface as follows:

```
L     R15,CEECAACELV-CEECAA(,R12)
L     R15,3976(,R15)
BALR  R14,R15
```

load_addr **(input/mandatory)**
is the address of an executable module.

func_pointer **(output)**
is a function pointer that can be used to call the function.

fc **(output/optional)**
specifies the optional feedback token where the CWI feedback code will be placed. If this argument is omitted and the CWI will return a feedback code other than **CEE000**, the CWI will “raise” this feedback code as an error condition.

The following feedback tokens and associated severities may be returned by the service in the feedback code *fc*.

CEE000	Severity	0
	Msg_No	0000
	Message	The service completed successfully.
CEE39K	Severity	1
	Msg_No	3380
	Message	The load module was not recognized by Language Environment.
CEE3NA	Severity	3
	Msg_No	3818
	Message	The event handler encountered an error.

Usage Notes:

1. After loading an executable module, CEE3ADDM (add members to the enclave) must be called prior to calling CEEPGFD to obtain a function pointer

for the newly-loaded module. CEE3ADDM will augment the set of currently active members and notify members that a new load module has been introduced into the enclave.

2. C and C++ are the only target languages that support the Get Function Pointer service.
3. When Language Environment returns the function pointer, the high order bit indicates the AMODE of the routine. You must provide the AMODE switching code when passing control to the function pointer.
4. Before deleting the load module containing the associated function, the CEEPRFD function must be called to release each function pointer obtained.
5. If the load module contains any ILC or the loading and loaded modules are written in different languages, the load module should not be deleted. The CEEFETCH and CEERELES assembler macros can be used to load and delete any ILC modules.

C and C++ Considerations

6. A C function that is called using a pointer returned by CEEPGFD will have access to the writable static area, if it exists.
7. To use CEEPGFD to obtain a function pointer for a C function, the C function must either:
   - Be compiled with the pragma linkage(...,fetchable) directive, or
   - Have the function name specified as the entry point when the module is linked.

   In addition, a C++ routine must be compiled as extern “C”.
8. CEEPGFD cannot be used to obtain a function pointer for a C main() routine.
9. If you use CEEPGFD to obtain a pointer for a C or C++ routine, calling the function pointer will give control to a glue routine. This routine will perform AMODE switching, if necessary, before calling the C/C++ routine.
10. If you use CEEPGFD to obtain a pointer for a C++ routine that is compiled as a DLL, the routine cannot export any variables or functions.

CEEPRFD — Release Function Pointer

The CEEPRFD CWI will release a function pointer that was obtained by calling CEEPGFD. All function pointers must be released before deleting the load module which contains the associated function.

Syntax

void CEEPRFD (**load_addr*, **func_pointer*, [*fc*])

```
POINTER     *load_addr;
POINTER     *func_pointer;
FEED_BACK   *fc;
```

CEEPRFD

Call this CWI interface as follows:

```
L     R15,CEECAACELV-CEECAA(,R12)
L     R15,3980(,R15)
BALR  R14,R15
```

load_addr **(input)**

is the load module address for which the function pointer was obtained.

func_pointer **(input)**

is a function pointer obtained by a call to CEEPGFD.

fc **(output/optional)**
specifies the optional feedback token where the CWI feedback code will be placed. If this argument is omitted and the CWI will return a feedback code other than **CEE000**, the CWI will "raise" this feedback code as an error condition.

The following feedback tokens and associated severities may be returned by the service in the feedback code *fc*.

CEE000	Severity	0
	Msg_No	0000
	Message	The service completed successfully.
CEE39K	Severity	1
	Msg_No	3380
	Message	The load module was not recognized by Language Environment.
CEE39A	Severity	3
	Msg_No	3818
	Message	An event handler encountered an error.

CEE3ADDM — Add New Members to the Enclave

This CWI interface dynamically augments the set of currently active members to an established environment. In addition, Language Environment notifies the members that a new load module was introduced into the enclave. This function is intended to be used when a new HLL is introduced into the currently executing mix of HLLs after a FETCH or dynamic call is performed.

Syntax

void CEE3ADDM (*entry_point, lang_list, [fc]*)

```
POINTER     *entry_point;
POINTER     *lang_list;
FEED_BACK   *fc;
```

CEE3ADDM
Call this CWI interface as follows:

```
L     R15,CEECAACELV-CEECAA(,R12)
L     R15,2888(,R15)
BALR  R14,R15
```

entry_point **(input)**
The entry point returned by a Language Environment load service.

lang_list **(output)**
The pointer to the language list found in the load module if the load module is recognized by Language Environment. If the load module is not recognized by Language Environment, a zero is returned.

fc **(output/optional)**
The parameter in to which the callable service feedback code is placed. The following conditions might result from this service.

CEE000	Severity	0
	Msg_No	N/A
	Message	The service completed successfully.
CEE38M	Severity	4
	Msg_No	3350
	Message	A member event handler was not found.
CEE38N	Severity	4
	Msg_No	3351
	Message	An event handler was unable to initialize properly.
CEE38V	Severity	2
	Msg_No	3359
	Message	The module or language list is not supported in this environment.
CEE39K	Severity	1
	Msg_No	3380
	Message	The load module was not recognized Language Environment.

Usage Notes:

1. Language Environment recognizes the following *entry_point* styles; Language Environment does not recognize any other entry styles:
   - C/C++ for MVS/ESA-style PPA
   - C/370-style PPA
   - A Language Environment routine entry layout (see “Routine Layout” on page 4)
   - Language Environment-format CEESTART
   - Language Environment callable service stubs
2. For Language Environment-recognized load modules, the following series of event handlers is called:
   a. For those members that are contained within the newly-loaded load module and that have not yet been called for process initialization, Language Environment loads the member event handler and calls it for process initialization.
   b. For those members that are contained within the newly-loaded load module and that have not yet been called for enclave initialization, Language Environment calls the member event handler for enclave initialization.
   c. For those members that are contained within the newly-loaded load module, Language Environment calls the member event handler with the new load module event (see “Event Code 8 — New Load Module Event” on page 459).
   d. For an application running with the POSIX(ON) run-time option or a PL/I tasking application, those members that are contained within the newly-loaded load module and that have not yet been called for POSIX thread initialization, Language Environment calls the member event handler for POSIX thread initialization.
3. For load modules Language Environment does not recognize, the following member event handler is called:
   - For all members that are currently active within the enclave, Language Environment calls the member event handler with the new load module

event passing a zero for the CEESTART parameter; see “Event Code 8 — New Load Module Event” on page 459.

4. When a member event handler is driven for the enclave initialization event due to the introduction of a new load module, Language Environment constructs the Initialization Parameter List (INPL) that is passed to the event handler. The INPL contains the following items:
   a. The entry point and the main entry point contain the *entry_point* that was passed into CEE3ADDM.
   b. The number of entries in the second half of the INPL is 7.
   c. The address of CEESTART is the CEESTART found in the newly introduced load module.
   d. The address of CEEBETBL points to a Language Environment constructed externals table.
   e. The member identifier is that of Language Environment.
   f. The main-opts word is zero.
5. The *lang_list* returned can be used to determine if the load module is a candidate for deletion using release() or a COBOL CANCEL statement. The *lang_list* is a read-only entity.
6. CEE3ADDM should be called by the member that issued the dynamic load.
7. Option processing does **not** occur.
8. No user exits are driven at this time.
9. The program mask is adjusted to accommodate the presence of new members within the environment.
10. No user code is called by Language Environment as a result of this call.
11. The dependency list is honored; see “Signature CSECT” on page 139 for details on the dependency list.

CEE3CRE — Create Enclave

The CEE3CRE CWI creates a new explicit enclave and initiates its execution. CEE3CRE can be called only from an already executing environment. The execution of the caller of CEE3CRE is suspended until the newly created enclave completes its execution and returns.

Syntax

void CEE3CRE (*name, run_opts, inherit, user_arg, prop_cond, rtn_cd ,rsn_cd, encl_fc, [fc]*)

```
VSTRING    *name;
VSTRING    *run_opts;
INT4       *inherit;
void       *user_arg;
INT4       *prop_cond;
INT4       *rtn_cd;
INT4       *rsn_cd;
FEED_BACK  *encl_fc;
FEED_BACK  *fc;
```

CEE3CRE

Call this CWI interface as follows:

```
L     R15,CEECAACELV-CEECAA(,R12)
L     R15,3356(,R15)
BALR  R14,R15
```

name **(input)**

is a halfword prefixed character string containing the name of the Language

Environment-enabled load module that is to start the enclave being created. The character string must be the platform-specific name identifying the load module. The name will be used as specified with no mapping by CEE3CRE.

run_opt **(input)**
is a halfword prefixed character string containing the CEE run-time options and/or the user parm string applicable to the execution of the enclave. The format and interpretation of this string follows the same rules as the invocation parameter string. The CBLOPTS, EXECOPS, and PLIST options for the created enclave affect the interpretation of this parm string.

inherit **(input)**
is a fullword integer which will determine if the explicitly created enclave inherits all the run-time options from its creating enclave.

0 the explicitly created enclave does not inherit its creating enclave's run-time options. Run-time options are established through the normal merge but with the *run_opts* argument taking the place of invocation options in the precedence order.

otherwise
the explicitly created enclave inherits its creating enclave's run-time options. When the value is specified, the input string in *run_opts* is ignored.

user_arg **(input)**
the argument that will be passed to the first routine of the enclave.

- If this argument is non-zero it is the R1 value which is passed to the main routine. Any user parm string present in the *run_opts* argument will be ignored.
- If this argument is zero, the user argument will be taken from the user parm string, if present in the *run_opts* argument.

prop_cond **(input)**
is a fullword integer which will determine if unhandled conditions or ABENDs that occur in the created enclave are propagated in or ignored by the creating enclave.

0 ignore the condition or ABEND in the creating enclave

otherwise
propagate conditions in the creating enclave

rtn_cd **(output)**
is a full word integer with the return code from the created enclave. This is valid only when *fc* is CEE000.

rsn_cd **(output)**
is a full word integer with the reason code from the created enclave. This is valid only when *fc* is CEE000.

encl_fc **(output)**
the feedback code produced by the execution of the enclave created by this call. This is valid only when *fc* is CEE000. When *encl_fc* is nonzero, it will be signaled in the CEE3CRE caller's enclave or be passed back based upon the value of *prop_cond*. The following feedback codes are possible:

CEE000	Severity	0
	Msg_No	N/A
	Message	The service completed successfully.

CEE391	Severity	1
	Msg_No	3361
	Message	The created enclave, *name*, completed with an unhandled condition of severity two or greater.

fc **(output/optional)**
The feedback code from the service indicates how the service performed, and not the created enclave. The following feedback codes are possible:

CEE000	Severity	0
	Msg_No	N/A
	Message	The service completed successfully.
CEE3DC	Severity	3
	Msg_No	3500
	Message	Not enough storage available to load *name*.
CEE3DD	Severity	3
	Msg_No	3501
	Message	The *name* module not found.
CEE3DE	Severity	3
	Msg_No	3502
	Message	*name* module name too long.
CEE3EF	Severity	3
	Msg_No	3503
	Message	Load service request for module *name* was unsuccessful.

Table 21 lists the condition behavior for the different combinations of TRAP(ON/OFF) in the creating and created enclaves.

Table 21. Unhandled Condition Behavior Summary

Behavior / Enclave Type	**Creating TRAP(ON) Created TRAP(ON)**	**Creating TRAP(ON) Created TRAP(OFF)**	**Creating TRAP(OFF) Created TRAP(ON)**	**Creating TRAP(OFF) Created TRAP(OFF)**
Propagate (*prop_cond* is not 0)				
Abend/Prog. check	Signal CEE391	Percolate original	Percolate U4094-40	Percolate original
Signal sev >= 2	Signal CEE391	Signal CEE391	Percolate U4094-40	Percolate U4094-40
Ignore (*prop_cond* is 0)				
Abend/Prog. check	Resume	Percolate original	Resume	Percolate original
Signal sev >= 2	Resume	Resume	Resume	Resume

Usage Notes:

1. The current thread waits for the created enclave to complete and for control to return to it.
2. There are two feedback codes in this service. One, *fc*, indicates how CEE3CRE behaved; the other, *encl_fc*, indicates how the created enclave executed. If the *fc* is zero, the result of the created enclave can be determined by the *encl_fc*.

3. The message file, specified by the run-time option MSGFILE, is shared across created enclaves if the MSGFILE name is the same.
4. When *inherit* parameter has value of zero, the CEEUOPT that is linked with the created enclave's load module is used during the option merge process.
5. The assembler user exit that is invoked for the created enclave is found in the created enclave load module (or the system default if not found in the created enclave load module).
6. If present, the HLL user exit that is invoked for initialization is found in the created enclave load module.
7. User parms will be available through the CEE3PRM, as follows:
   - If *user_arg* is zero, then the user parm string, if present in the *run_opts* argument, will be available.
   - If *user_arg* is non-zero, then no user parms will be available.
8. Debug Tool operation in a created enclave is documented by Debug Tool. Language Environment will not honor the TEST initial command string in a created enclave in which the debugger is already active.
9. This service is not supported in a CICS environment.
10. The PLIST option in the created enclave load module will be used to determine how the main routine anticipates the argument list. CEE3CRE normally makes register one contain either the address of *run_opts* or the value specified in *user_arg* and passes register one to the created enclave load module. After the explicit enclave is created and the main program gets control, register one may contain one of the following forms as the parameter list to the main program:
    - Value specified in *user_arg*.
    - Address of *run_opts* when NOEXECOPS is in effect.
    - Address of *run_opts* with run-time options removed when EXECOPS is in effect.

    One exception is for the case of PLIST(TSO). One level of indirection to the parameter list is added. The rationale is that PLIST specified in the seventh word of the INPL does not effect the inbound character string for the created enclave in its process of run-time options and user arguments since the format has been defined in CEE3CRE. However, PLIST affects the format of the parameter list passed to the main program and one level of indirection should be added in for the case of PLIST(TSO).
11. The *name* field must contain a name that refers to a Language Environment-enabled target load module that starts with a main program. Target load modules that are not Language Environment-enabled are not supported. Unpredictable results will occur if a non-Language Environment-enabled module is the target of CEE3CRE.
12. Abend U4093–DC will be issued during initialization of the enclave if the load module specified contains one of the languages not supported by z/OS.e.

CEE3CSYS — Creating Nested Enclave

This CWI passes control to a target program. Control is passed in such a way that, if the target is a Language Environment-enabled application, the first call (if any) to CEEINT from the target program or its descendents results in the creation of a new nested enclave. CEE3CSYS can be called only from an already executing Language Environment environment. The execution of the caller of CEE3CSYS is suspended until the newly created enclave or non-Language Environment service, command, or EXEC completes its execution and returns.

Syntax

void (*CEECELVBCSYS) (*name, user_arg, rsvd_word, rsvd_word, rtn_cd,[fc]*)

```
VSTRING   *name;
void      *user_arg;
void      *rsvd_word;
void      *rsvd_word;
INT4      *rtn_cd;
FEED_BACK *fc;
```

CEECELVBCSYS

Call this CWI interface as follows:

```
L     R15,CEECAACELV-CEECAA(,R12)
L     R15,2988(,R15)
BALR  R14,R15
```

name **(input)**

name is a halfword-prefixed character string containing the name of the entry point in the target load module that is to receive control. The character string must be the platform-specific name identifying the entry point. The name is used as specified with no mapping by CEE3CSYS. The search order for the load module is consistent with that used for SVC LINK.

user_arg **(input)**

user_arg is the equivalent of an R1 value. This can pass a single argument in the form of a halfword-prefixed character string that can contain user parameters and optionally run-time options.

rsvd_word **(input)**

A fullword reserved for future use.

rsvd_word **(input)**

A fullword reserved for future use.

rtn_cd **(output)**

A full word integer with the return code from the target enclave. This is valid only when *fc* is CEE000.

fc **(output/optional)**

The feedback code from the service indicates how the service performed, and not the target enclave. The following feedback codes are possible:

CEE000	Severity	0
	Msg_No	0000
	Message	The service completed successfully.
CEE3DC	Severity	3
	Msg_No	3500
	Message	Not enough storage available to load *name*.
CEE3DD	Severity	3
	Msg_No	3501
	Message	*name* module not found.
CEE3DE	Severity	3
	Msg_No	3502
	Message	*name* module name too long.

CEE3DF	Severity	3
	Msg_No	3503
	Message	Load service request for module *name* was unsuccessful.

Usage Notes:

1. The current thread waits for the new enclave or non-Language Environment service, command, or EXEC to complete and for control to return to it.
2. The unhandled condition behavior in the target enclave is always ignored.
3. The message file, specified by the run-time option MSGFILE, is shared across nested enclaves if the MSGFILE name is the same.
4. Run-time options are always obtained by normal merge in the target enclave. The *user_arg* string is used as command line equivalent. The availability of run-time options is subject to the EXECOPS setting of the target main program). The CEEUOPT that is linked with the nested enclave's load module is used during this option merge process.
5. If the assembler user exit that is invoked for the nested enclave creation is found in the target load module (user-supplied) it is used. Otherwise the system default user exit is used.
6. The HLL user exit that is invoked for nested enclave initialization is found in the target load module.
7. Abend U4093–DC will be issued during initialization of the enclave if the load module specified contains one of the languages not supported by z/OS.e.

CEE3MBR — Member Bootstrap Routine

This CWI interface dynamically augments the set of currently active members in an established environment. In addition, Language Environment notifies the members that a new load module was introduced into the enclave. This function is intended to be used on the callee side of a newly introduced load module. Specifically, it should be used when a HLL discovers the Language Environment environment established (using the anchor lookup) but the HLL-specific portion has not yet been initialized.

Syntax

void CEE3MBR (*lang_list, entry_point, inpl, [fc]*)

```
POINTER     *lang_list;
POINTER     *entry_point;
POINTER     *inpl;
FEED_BACK   *fc;
```

CEE3MBR

Call this CWI interface as follows:

```
L     R15,CEECAACELV-CEECAA(,R12)
L     R15,2872(,R15)
BALR  R14,R15
```

lang_list **(input)**

The language list found in the load module. If this needs to manufactured by the caller, it should contain the entire header section. If the load module is already Language Environment-enabled, the language list can be obtained from the Language Environment externals table.

entry_point **(input)**
The entry point or entry point address for which CEE3MBR is called.

inpl or zero **(input)**
If the load module contains an INPL, it should be passed on this call. If the load module does not contain an INPL, pass a zero.

fc **(output/optional)**
The parameter in to which the callable service feedback code is placed. The following conditions might result from this service.

CEE000	Severity	0
	Msg_No	N/A
	Message	The service completed successfully.
CEE38M	Severity	4
	Msg_No	3350
	Message	A member event handler was not found.
CEE38N	Severity	4
	Msg_No	3351
	Message	An event handler was unable to initialize properly.
CEE38V	Severity	2
	Msg_No	3359
	Message	The module or language list is not supported in this environment.
CEE39K	Severity	1
	Msg_No	3380
	Message	The load module was not recognized Language Environment.

Usage Notes:

1. For the members that are contained within the member list that is passed to CEE3MBR the following events are called:
   a. For those members that are contained within the newly-loaded load module and that have not yet been called for process initialization, Language Environment loads the member event handler and calls it for process initialization.
   b. For those members that are contained within the newly-loaded load module and that have not yet been called for enclave initialization, Language Environment calls the member event handler for enclave initialization.
   c. For an application running with the POSIX(ON) run-time option or a PL/I Tasking application, those members that are contained within the newly-loaded load module and that have not yet been called for POSIX thread initialization, Language Environment calls the member event handler for POSIX thread initialization.
   d. For those members that are contained within the newly-loaded load module, Language Environment calls the member event handler with the new load module event; see “Event Code 8 — New Load Module Event” on page 459.
2. Under CICS, a call to CEE3ADDM calls the new load module event and does not perform any ERTLI calls. The new load module event allows members to retain their current logic for both CICS and non-CICS paths. All other fields of PGMINFO1 and PGMINFO2 are zero.

3. If nonzero, Language Environment uses *inpl* that is passed into CEE3MBR. If *inpl* is zero, Language Environment constructs an INPL for the event handlers using the *lang_list* passed. The INPL can be omitted only in the compatibility case.

   When Language Environment constructs the INPL that is passed to the event handlers, the INPL contains the following items:
   a. The entry point and the main entry point contains the entry point that was passed into CEE3MBR.
   b. The number of entries in the second half of the INPL is 7.
   c. The address of CEESTART is the CEESTART found in the newly-introduced load module, if not found, zero.
   d. The address of CEEBETBL points to Language Environment constructed externals table containing:
      1) Fullword of 6
      2) Zero (BAL user exit)
      3) Zero (HLL user exit)
      4) Address of the *lang_list* that was passed
      5) Zero (CEEUOPT)
      6) Zero (termination stub)
   e. The member identifier is Language Environment's
   f. The main-opts word is zero
4. If Language Environment recognizes the entry point as a program that object with deferred classes, the constructed externals table will have the following format:
   - Fullword of 9
   - Zero (BAL user exit)
   - Zero (HLL user exit)
   - Address of the *lang_list* that was passed.
   - Zero (CEEUOPT)
   - Zero (termination stub)
   - Zero (PL/I or C user exit)
   - Zero (unique binding table)
   - Address of loader information table from the executable program identified by the *entry_point* value.

CEE3SRSA — Set Return Save Area

This CWI interface dynamically sets the save area through which Language Environment returns on termination of the current enclave.

Syntax

void CEE3SRSA (*rsa_address*)

```
*void      *rsa_address;
```

CEE3SRSA

Call this CWI interface as follows:

```
L     R15,CEECAACELV-CEECAA(,R12)
L     R15,2904(,R15)
BALR  R14,R15
```

rsa_address

The register save area address that is used for return after Language

Environment termination. Registers are restored from *rsa_address* and control transferred using R14 which is contained within the *rsa_address*.

Usage Notes:

1. This service is provided explicitly for compatibility support and is not intended for general use.
2. This service allows members to identify the register save area that Language Environment uses as the target save area for its termination.
3. No verification is performed on the parameter.
4. This routine is has no effect when running under CICS and in a preinitialized environment.

CEE3DDBC — Set Dummy DSA Back Chain

This CWI interface dynamically sets the back chain of the dummy DSA.

Syntax

void CEE3DDBC (*rsa_address*)

```
*void      *rsa_address;
```

CEE3DDBC

Call this CWI interface as follows:

```
L     R15,CEECAACELV-CEECAA(,R12)
L     R15,2900(,R15)
BALR  R14,R15
```

rsa_address

The register save area address that is stored in the back chain slot of the Dummy DSA.

Usage Notes:

1. This service is provided explicitly for compatibility support and is not intended for general use.
2. No verification is performed on the parameter.
3. This routine is has no effect when running under CICS and in a preinitialized environment.

CEE3PLST — PLIST Manipulation

This CWI allows the member that requested initialization to specify the parameter list that is passed to the user application code.

Syntax

void CEE3PLST (*R1_value, [fc]*)

```
POINTER   *R1_value;
FEED_BACK *fc;
```

CEE3PLST

Call this CWI interface as follows:

```
L     R15,CEECAACELV-CEECAA(,R12)
L     R15,2920(,R15)
BALR  R14,R15
```

R1_value **(input)**
A fullword containing the value to be returned by CEEINT in R1 to the user's main routine.

fc **(output/optional)**
The feedback code passed by reference. The following conditions might result from this service:

CEE000	Severity	0
	Msg_No	N/A
	Message	The service completed successfully.
CEE38P	Severity	3
	Msg_No	3353
	Message	The service was not called during event handler processing of the enclave create service or it was called by other than the member corresponding to the language of the main routine.
CEE38Q	Severity	3
	Msg_No	3354
	Message	The service was called in a CICS environment. The parameter list pointer is not modified.

Usage Notes:

1. This service can only be called during event handler processing of the enclave create event.
2. This service can only be called by the member corresponding to the language of the main routine, as specified in the initialization parameter list. A language can determine this by checking the field in the initialization parameter list containing the member identifier of the creator of initialization parameter list. This service does not modify the main parameter list pointer in a CICS environment.
3. This service does not modify the default parameter list pointer CEEEDBDEFPLPTR.
4. Use of this service allows members to repackage the parameter list during initialization.

CEEGIN — Obtain the Program's Invocation Name

This CWI returns the program name used to initiate this enclave.

Syntax

void CEEGIN (*pname,[fc]*)

```
CHAR8     *pname;
FEED_BACK *fc;
```

CEEGIN

Call this CWI interface as follows:

```
L     R15,CEECAACELV-CEECAA(,R12)
L     R15,0120(,R15)
BALR  R14,R15
```

pname **(output)**
An 8-character fixed length string, left-justified and right-padded, containing the name of the routine that called the enclave.

fc **(output/optional)**
The feedback code passed by reference. The following conditions might result from this service:

CEE000	Severity	0
	Msg_No	N/A
	Message	The service completed successfully.
CEE39A	Severity	1
	Msg_No	3370
	Message	The program invocation name is unknown and the returned name is blank.

Usage Notes:

1. If the application is running under TSO and a CPPL is passed, the invocation name is obtained from the TSO command buffer, which is pointed to by the first word of the CPPL.

   Note: The CPPL is mapped by the IKJCPPL DSECT.
2. If the application is running under CICS, the 4-character transaction name is obtained from the EIB.
3. If the application is running under TSO without a CPPL, or under z/OS, the invocation name is obtained from the Contents Directory Entry (CDE) that has the same address as the application in question.

CEERELU — RCB Lookup

This routine sets R12 to the address of the RCB when the following conditions are met:

1. A Language Environment environment is not currently initialized.
2. Library routine retention has been successfully initialized and a Language Environment environment has been initialized and terminated at least one time with library routine retention in effect.

Syntax

Call CEERELU

Usage Notes:

1. Upon return, R12 contains the address of the RCB if the above conditions are met; otherwise, R12 contains a zero.
2. R14 and R15 are used as linkage registers. R0 is destroyed across the call. R13 is not used.
3. The routine must be entered in AMODE(31).
4. It must be link edited with its caller. It is not meant to be called from a HLL program.

Member Interfaces for Termination

The following section covers enclave termination and includes information on the CEETREC CWI, the CEETREN CWI, and the CEEATTRM CWI.

CEETREC — Explicit Termination through HLL Constructs

CEETREC is a CWI that is intended for graceful enclave termination, supporting explicit termination through a HLL language construct such as a STOP statement or exit() function. The T_I_S condition notifies the stack frames on the current thread's stack of the intent to terminate the thread. The T_I_S condition is signaled using CEETREC.

Syntax

void CEETREC (*[encl_modifier], [user_rtn_code]*)

```
INT4  *encl_modifier;
INT4  *user_rtn_code;
```

CEETREC

Call this CWI interface as follows:

```
L     R15,CEECAACELV-CEECAA(,R12)
L     R15,2880(,R15)
BALR  R14,R15
```

encl_modifier **(input/optional)**

The *encl_modifier* can be 0, 1, 2, or 3; if you do not specify one of these values or if you omit this parameter, a zero is assumed.

Calculate the enclave reason code, sometimes called a return code modifier, by multiplying the encl_modifier by 1000. For more information, refer to ″How the enclave reason code is calculated″ in *z/OS Language Environment Programming Guide*.

user_rtn_code **(input/optional)**

The user's specified return code for the enclave. If this is omitted, the return code is assumed to be zero.

Usage Notes:

1. Control does not return to the invoker of this service.
2. The actions taken by this service are:
   a. Call CEESGL (T_I_S, <omitted>, fbcode). Note that the CIB contains the enclave termination return code.
   b. Quiesce all threads within the enclave.
   c. Calculate the enclave composite return code from the parameters.
   d. Set the termination condition token to zero.
   e. All enclave level members and user exits are executed.
   f. Return to the caller of the enclave with the appropriate return/reason code. Control is not returned to the caller of CEETREC.
3. If the *user_rtn_code* is omitted the enclave level user return code (CEEEDBURC) is used in the calculation of the enclave composite return code.
4. CEETREC cannot terminate the enclave if the resume cursor has been moved during the T_I_S processing.
5. Calculate the enclave return code by adding the user_rtn_code to the enclave reason code. For more information, refer to ″Managing return codes in z/OS Language Environment″ in *z/OS Language Environment Programming Guide*.

6. The intended use of this service is to raise T_I_S and to provide graceful termination.
7. Control is given to the R14 value that is saved in the save area presented at enclave initialization.

CEETREN — Terminate without Raising T_I_S

CEETREN is a CWI that is intended for graceful enclave termination, supporting voluntary termination such as a return from main without raising T_I_S. The T_I_S condition notifies the stack frames on the current thread's stack of the intent to terminate the thread.

Syntax

void CEETREN (*[encl_modifier], [user_rtn_code]*)

```
INT4  *encl_modifier;
INT4  *user_rtn_code;
```

CEETREN

Call this CWI interface as follows:

```
L     R15,CEECAACELV-CEECAA(,R12)
L     R15,2876(,R15)
BALR  R14,R15
```

encl_modifier **(input/optional)**

The *encl_modifier* can be 0, 1, 2, or 3; if you do not specify one of these values or if you omit this parameter, a zero is assumed.

Calculate the enclave reason code, sometimes called a return code modifier, by multiplying the encl_modifier by 1000. For more information, refer to ″How the enclave reason code is calculated″ in *z/OS Language Environment Programming Guide*.

user_rtn_code **(input/optional)**

The user's specified return code for the enclave.

Usage Notes:

1. Control does not return to the caller of this service.
2. The actions taken by this service are:
   a. Calculate the enclave composite return code from the parameters.
   b. Set the termination condition token to zero.
   c. All enclave level members and user exits are run.
   d. Return to the caller of the enclave with the appropriate return/reason code. Control is not returned to the caller of CEETREN.
3. If the *user_rtn_code* is omitted, then the enclave-level user return code (CEEEDBURC) is used in the calculation of the enclave composite return code.
4. A GOBACK from a main COBOL program calls CEETREN.

   Note the difference between the COBOL main program issuing a STOP RUN versus a GOBACK. The STOP RUN raises T_I, thus allowing the application to resume. A GOBACK from the main program terminates the enclave without the possibility of resumption.
5. The intended use of this service is to provide graceful termination without raising T_I_S.
6. Calculate the enclave return code by adding the user_rtn_code to the enclave reason code. For more information, refer to ″Managing return codes in z/OS Language Environment″ in *z/OS Language Environment Programming Guide*.

7. Control is given to the R14 value that is saved in the save area presented at enclave initialization.

CEEATTRM — Register Event Handler

CEEATTRM is a CWI that is used to register a member to gain control, through the member event handler, during termination. The member event handler gains control before any language termination activity is started.

Syntax

void CEEATTRM (*member_id*)

```
INT4  *member_id;
```

CEEATTRM

Call this CWI interface as follows:

```
L     R15,CEECAACELV-CEECAA(,R12)   Address of CAA in R12
L     R15,2912(,R15)
BALR  R14,R15
```

member_id **(input)**

A fullword Language Environment member identifier number whose event handler is called with function code 15.

Termination Sequence

For normal termination, the following steps occur:

1. CALL CEETREN or CEETREC to request termination.
2. Normal handling of the condition occurs without regard to the condition itself.
3. Those members that have been registered using the CEEATTRM service are called. The order of invocation of the members for the atterm event is unpredictable. When the atterm exit is driven, member termination has not yet started.
4. The debug tool is called for enclave termination, if the debug tool were already initialized.
5. Call the HLL specific enclave termination routines in the order defined using the signature CSECTs.
6. Call the assembler user exit.

Termination Failures

If Language Environment cannot successfully terminate the enclave, it abends with completion code 4094. For example, this can occur when the program has overwritten Language Environment storage, causing Language Environment control blocks to become invalid. The reason code associated with the ABEND 4094 indicates the cause of the failure. The reason codes are described in *z/OS Language Environment Debugging Guide*.

Note: The reason and return codes are passed to the assembler user exit during termination processing. The exit can examine these values and change them. The return code and reason code returned by the user exit are used by Language Environment as the values returned in R15 and R0.

The T_I_S Condition

The T_I_S condition is defined as follows:

CEE067	Severity	1
	Msg_No	0199

Signaling the T_I_S condition notifies the stack frames on the current thread's stack of the intent to terminate the thread. Notice that if the T_I_S condition is not handled, control returns to the next sequential instruction following the point where the Termination_Imminent condition was raised.

Member Event Codes for Initialization and Termination

The event codes listed below are called for preinitialization and for batch initialization. For a description of the calling method, see "Language Environment Member List and Event Handler" on page 74. (CICS initialization is discussed in Chapter 13, "Subsystem Considerations" on page 397.)

Language Environment calls member-specific initialization (MSI) routines for process initialization and again for enclave initialization. The resources and capabilities differ between the two events. The following events are called by Language Environment:

- Process initialization
- Enclave initialization
- Process termination
- Enclave termination
- Run-time options event
- Atterm event

Language Environment expects its registers to be restored to their original value upon return, conforming to normal calling conventions. The event handler must set the return code in R15 to one of the valid return codes, as follows:

RC	Meaning
-4	No action was taken for this event.
0	The termination event was successfully processed.
16	The event was not successfully processed and/or the program must be immediately terminated.

Language Environment abends the program if the event handler returns a value of 16 or a value not in the preceding list.

During initialization, Language Environment determines the members present in the application by interrogating the language list identifying those members present in the application and that require member-specific initialization. Each member found in the list has its event handler routine (CEEEV*nnn*) loaded and called by Language Environment initialization in AMODE 31. The address of each event handler routine is stored into the Language Environment member list at the enclave level.

Language Environment expects a return in AMODE 31, and its registers to be restored to their original values using normal calling conventions. If an exception occurs during the execution of an MSI routine, the Language Environment exception manager issues an ABEND 4093 and the Language Environment environment terminates.

Member Event Codes

If there are multiple occurrences of a member within an enclave, its MSI routine is called only once per enclave. In addition, the order in which the MSI routines are called is determined from the list of member identifiers contained within the signature CSECTs.

If the MSIs need to be called in a specific order, it is indicated in the signature CSECT. For the format of the signature CSECT, see Figure 52 on page 139. Language Environment calls the MSI routines in the order dictated by the signature CSECTs. Termination is performed in the reverse order. If the signature CSECTs do not indicate any dependencies, the order of MSI invocation is undefined.

Process Initialization Event

The process initialization event code is 17. This event is used to bring up HLL portions at the process level. The order in which the member event handlers are called is undefined. In particular, the dependency list is not honored. For a description of the parameters, see “Event Code 17 — Process Initialization Event” on page 465.

Process Termination Event

The process termination event code is 21. This event is used to terminate HLL portions at the process level. The order in which the member event handlers are called is undefined. In particular, the dependency list is not honored. For a description of the parameters, see “Event Code 21 — Process Termination Event” on page 471.

Enclave Initialization Event

The enclave initialization event code is 18. This event is used to initialize HLL portions at the enclave level. The order in which the member event handlers are driven is first based on the ascending order of the member identifier. However, if the member identifier is identified by a numerically lower ID in the dependencies part of the signature CSECT it could be called prior to a lower ID. For more information about the signature CSECTs, see “Signature CSECT” on page 139. For a description of the parameters, see “Event Code 18 — Enclave Initialization Event” on page 466.

Enclave Termination Event

The enclave termination event code is 19. This event is used to terminate HLL portions at the enclave level. The order in which the member event handlers are called is in the reverse order of initialization. The dependencies are determined from the signature CSECTs. For more information about the signature CSECTs, see “Signature CSECT” on page 139. For a description of the parameters, see “Event Code 19 — Enclave Termination Event” on page 469.

Run-Time Options Event

The run-time options event code is number 4. This event has limited capabilities. There is no stack available, nor any Language Environment callable services. The purpose is to allow the members to handle run-time options in a compatible fashion. For a description of the parameters, see “Event Code 4 — Run-Time Options Event” on page 449.

Atterm Event

The atterm event code is number 15. The atterm event is called during termination of an enclave. It is called after all user stack frames have been removed from the

stack and prior to calling the members for the enclave termination event. Only the members that have been explicitly registered using the CWI CEEATTRM is called. For a description of the parameters, see “Event Code 15 — Atterm Event” on page 464.

Note: For information on Language Environment return codes, reason codes, existing language semantics, processing, and conventions, refer to *z/OS Language Environment Programming Guide*.

Language Environment Abend Summary

The normal paradigm for Language Environment (with TRAP ON) is to transform abends into signaled conditions, which if unhandled result in nonzero return and feedback codes.

In the rare case that Language Environment finds that its operation is severely compromised then it terminates the process with a 4xxx abend. The range of abends treated this way is 4000 to 4095. Termination is immediate (using SVC 13 or EXEC CICS ABEND, when in the CICS environment). Enclosing enclaves, if any, percolate the abend such that the whole process is taken down and no member or user termination exits at any level are driven.

When an implicit enclave created using system assisted linkage (such as LINK or CICS LINK) terminates with an unhandled condition, the system/subsystem abend function is called by Language Environment after normal cleanup.

The user (assembler) termination exit can transform the return, results and feedback codes in accordance with application needs. It can also request that an abend with a user code be issued by Language Environment on behalf of this enclave. This abend occurs as the last action in the enclave at the point where return would normally be passed back to the creator of the enclave. Because the current enclave has already canceled its STAE and SPIE exit, it does not get control, however the calling (if there is one) enclave’s STAE does and thus its condition handler processes the exception in the normal way.

CEECOPP — Run-Time Option Compiler Service

A callable service allows for compilers to convert run-time options strings specified in a source program to an options control block (OCB). This interface also supports the run-time options that are not part of the OCB, specifically ENV, PLIST, REDIR, EXECOPS, and ARGPARSE. These options are returned in the Supplementary Options Control Block (SOCB). The compiler would then create the OCB in the same format as the CEEUOPT CSECT file. This service is loadable and requires multiple calls, one to obtain the size of the working storage block (which includes the size of the OCB), and subsequent calls for the HLL to pass the run-time options string and the working storage and receive the parsed output.

CEECOPP is called by loading the executable named CEECOPP (using the LOAD SVC service) which resides in the SCEERUN data set. Then call the entry point returned from the load using:

Syntax

void CEECOPP (*function_code, storage_size, storage_addr, options, ocb_addr, socb_addr, roet_addr, ocb_status, socb_status, rc*)

```
INT4       *function_code;
INT4       *storage_size;
POINTER    *storage_addr;
PREFIXSTR  *options;
POINTER    *ocb_addr;
POINTER    *socb_addr;
POINTER    *roet_addr;
POINTER    *ocb_status;
POINTER    *socb_status;
INT4       *rc;
```

function_code **(input)**
Indicates the type of request. The valid function codes and meanings are:

1 Obtain the size of working storage. The first call is required to communicate to the caller how much storage is required by Language Environment to parse the options, the size of the resulting OCB, and the size of the error table. It is the caller's responsibility to acquire the storage and return the address to Language Environment in the second call.

2 Initialize OCB and parse the supplied options. The second call is used to initialize the OCB and to parse the options and save them in the OCB.

3 Parse the supplied options. Subsequent calls are used to parse the options save them in the OCB created by function code 2.

storage_size **(output)**
The amount of storage required by Language Environment to do the parse. This size includes the amount of working storage needed to parse the string, the resulting OCB, and an error table. This is used in conjunction with *function_code* equal to 1.

storage_addr **(input)**
The address of storage of the length returned by Language Environment in the first call. This is used in conjunction with *function_code* 2 and 3.

options **(input)**
A character string containing the run-time options. This is a halfword-prefixed length string. The string is not altered and can reside in read-only storage. This is used in conjunction with *function_code* 2 and 3.

ocb_addr **(output)**
The address of the options control block that was created with the parsed options. The compiler should convert this block into a CEEUOPT CSECT. The storage used for the OCB is obtained from the storage provided by the caller. The length of the OCB is found directly within the OCB itself. The OCB is constructed so that there are no relocatable address constants and is essentially a stream of hex information. This is used in conjunction with *function_code 2 and 3*. For an example of an options control block, see Appendix A, "Options Control Block and Supplementary Options Control Block" on page 589.

socb_addr **(output)**
The address of a supplementary options control block (SOCB) that was created with the parsed options. The compiler should convert this block into a format

that is suited to the caller. Language Environment does not retain this information. The storage used for the SOCB is obtained from the storage provided by the caller. The length of the SOCB is found directly within the SOCB itself. The SOCB is constructed so that there are no relocatable address constants and is essentially a stream of hex information. This is used in conjunction with *function_code* 2 and 3. For an example of a supplementary options control block, see Appendix A, “Options Control Block and Supplementary Options Control Block” on page 589.

roet_addr **(output)**
The address of the run-time options error table created. The caller could convert this error table into error messages as part of the compiler output in its normal way of outputting errors. This is used in conjunction with *function_code* 2 and 3. The format of the run-time options error table is shown in Figure 57 on page 174.

ocb_status **(output)**
A fullword integer that contains the status of output OCB. If zero, no OCB entries were made. If nonzero, OCB entries have been made.

socb_status **(output)**
A fullword integer that contains the status of output SOCB. If zero, no SOCB entries were made. If nonzero, SOCB entries have been made.

rc **(output)**
A fullword integer that contains the return code. This is used in conjunction with both *function_code* 2s. The possible values are:

0 Options parsed with no errors, OCB entries made.
4 Invalid function code detected. No action performed.
8 Invalid function code sequence. Function code 3 (parse only) was received before function code 2 (initialize and parse).

Usage Notes:

1. In the OCB there are no address constants; therefore, no RLDs need to be created.
2. Options string length limitation is 64K bytes.
3. CEECOPP is reentrant and is marked AMODE(31)/RMODE(ANY). It is the caller’s responsibility to insure the proper AMODE upon entry. CEECOPP does not switch AMODEs.
4. Invocation of CEECOPP is through BALR 14,15.
5. If the *OCB_status* parameter is zero, the compiler should not generate the CEEUOPT CSECT.
6. If the *roet_error_count* field in the ROET is not zero, errors occurred in the parse of the options string. The errors are contained in the table.
7. The *roet_error_code* field is in the format of a Language Environment condition token which is described in Figure 62 on page 222. The message numbers associated with the feedback codes that could be found in the run-time options error table are between CEE3601I and CEE3629I. For a description of these messages, see *z/OS Language Environment Debugging Guide*.

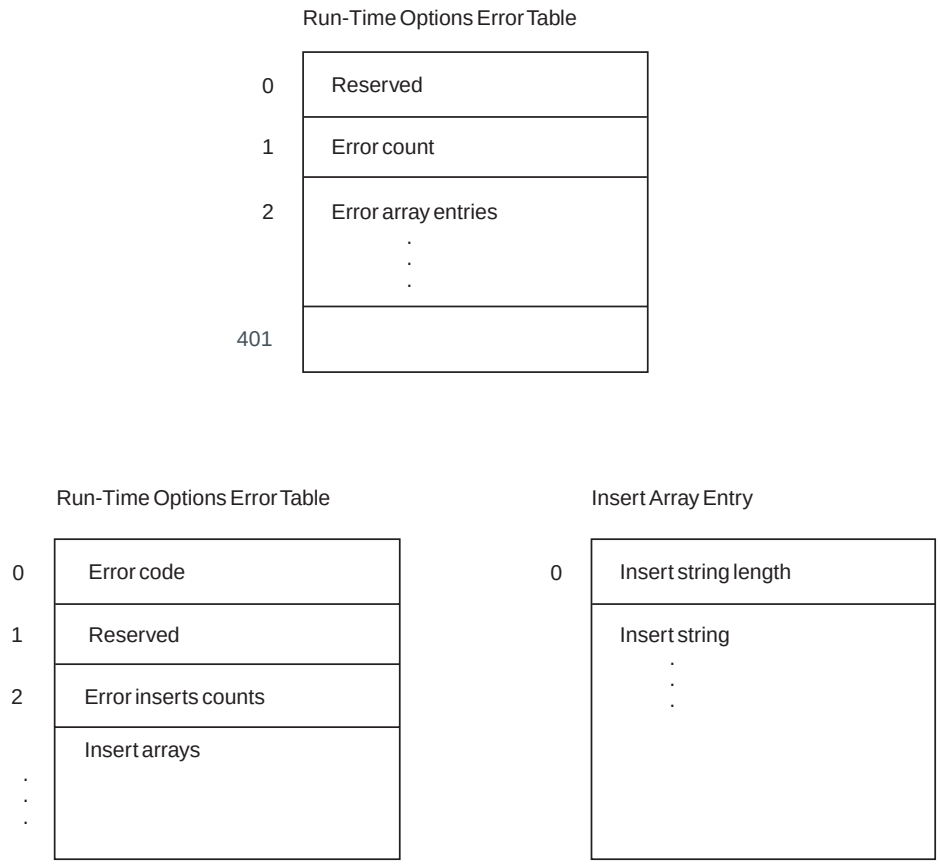

Figure 57. Run-Time Options Error Table

Options Processing Event

Event 4, which is used for compatibility options processing, has an update in its parameter list: an INPL is passed instead of the address of the main entry point. For a description of the parameters, see “Event Code 4 — Run-Time Options Event” on page 449.

User Exits

The assembler user exit for initialization is called when the enclave is initialized. This occurs during the CEEPIPI(init_sub) call and during the CEEPIPI(call_main) call.

The assembler user exit for termination is called when the enclave is terminated. This occurs at the end of a CEEPIPI(call_main) call, and at a CEEPIPI(term) for an environment for subroutines.

Similarly, the HLL user exit is called during the CEEPIPI(init_sub) invocation, and during the CEEPIPI(call_main) invocation.

CEEBSHL — Exit From/Re-Entry to Language Environment Shell

CEEBSHL is a CWI routine, which is called just before exit from, and just after re-entry to, Language Environment. This allows the Language Environment to be appropriately altered to accommodate the switch in states from a dormant environment to an active environment and vice versa.

Syntax

CEEBSHL (*function_code*)

CEEBSHL

Call this CWI interface as follows:

```
L     R15,CEECAACELV-CEECAA(,R12)
L     R15,3968(,R15)
BALR  R14,R15
```

function_code **(input)**

Fullword integer set to one of the following values:

1 Application is exiting Language Environment and wants to put the Language Environment in a dormant state.

2 Application is re-entering a dormant Language Environment and wants to put the Language Environment in an active state.

Usage Notes:

1. The Language Environment ESTAE will percolate all abends when the environment is dormant.
2. The Language Environment ESTAE is enabled to handle abends and program interrupts when the environment is activated.
3. Calls to CEEINT while the environment is dormant will cause the environment to be activated.

Language Environment Interface Validation Exit

The binder that is part of DFSMS/MVS® Version 1 Release 3 allows a user-specified exit, called the *interface validation exit*, to examine and possibly modify names given as external references. The interaction of the binder and an interface validation exit are described in the “Interface Validation Exit” section of the *z/OS DFSMS Program Management* book. This exit is given control immediately before the external references are bound to specific entry point names. It may invoke any of the language-specific interface validation exit routines it contains (see “Language-Specific Interface Validation Exit” on page 179). If the exit requests that an external reference be changed, the binder attempts to bind the reference to an entry point with the new name, using the binder’s autocall facilities if necessary.

The language-specific interface validation exit routines (see “Language-Specific Interface Validation Exit” on page 179) that are invoked from the language-specific interface validation exit must conform to the conventions described in “Language-Specific Interface Validation Exit” on page 179 and must not use any additional features that the binder provides in general to an arbitrary interface validation exit. Here are two such features whose use is prohibited:

- The character string that the binder passes to any interface validation exit.
- The setting of the exit signature.

The name of an interface validation exit to be used is indicated to the binder by giving the name of the exit routine on an execution parameter to the binder.

Invocation of the exit is requested of the binder on a binder execution-time option as follows:

Invoking the Language Environment Interface Validation Exit

```
PARM='[...,] EXITS(INTFVAL(CEEPINTV))[,...]'
```

When an exit is specified in this manner, the named exit is invoked during binder execution. The exit is invoked once for each control section containing external references that have not been bound to entry names and validated. As the exit may be invoked quite often, it is important that the code in the exit be as efficient as possible so as not to degrade binder performance. Because of this performance consideration and the fact that contributions to the exit may be supplied by multiple languages, the exit is shipped as part of the Language Environment component of Language Environment. This exit is called the *Language Environment interface validation exit*.

Structure of the Language Environment Interface Validation Exit

The Language Environment interface validation exit is a load module in SCEELKED with the name CEEPINTV. (This load module is shipped in SCEELKED rather than in SCEERUN because it's actions apply to names that are in a specific level of SCEELKED rather than to anything in a specific level of SCEERUN. The renaming actions do not apply to execution of the application or to any changes that occur in SCEERUN from release to release of Language Environment.) It invokes one or more language-specific interface validation routines (see "Language-Specific Interface Validation Exit" on page 179).

The load module CEEPINTV contains these separately assembled routines:

CEEPINTV
: This routine receives control from the binder, screens for possible renaming actions based on IDR information, and passes control to one of several language-specific interface validation exit routines for further analysis. In addition to some fixed code, CEEPINTV contains a series of CEEXVSEL macro instructions indicating that, when certain selection criteria are satisfied, a specific language-specific interface validation exit should be invoked to determine which external names, if any, should be renamed. The macro CEEXVSEL is described in "CEEXVSEL — High-Level Selection Criteria" on page 177.

CEE*fff***X***n*
: These *language-specific interface validation exit* routines receive control from CEEPINTV based on the selection criteria indicated in a CEEXVSEL macro instruction. They determine whether an external reference should be renamed, and, if so, specify the new name. In the naming convention, *fff* is the component's three-character module prefix (for example, AFH for Fortran or IGZ for COBOL), and *n* is any digit. The conventions for coding a language-specific interface validation exit, along with the arguments passed to it, are described in "Language-Specific Interface Validation Exit" on page 179.

CEE*fff***XM**
: These language-specific interface validation message modules provide the text of messages, if any, that are to be printed by the binder in exceptional cases. For more information about message handling, see "Message Handling" on page 183.

CEEXVSEL — High-Level Selection Criteria

Each CEEXVSEL macro instruction in the routine CEEPINTV provides selection criteria that control whether a certain language-specific interface validation exit is to be invoked. The selection criteria include:

- IDR information of the control section whose external references are being examined,
- IDR information of the target control sections; that is, the control sections that contain the entry points that are about to be bound with the external references,
- Prefix of the names of the target control sections, and
- Any unresolved external references.

When the Language Environment interface validation exit finds that a set of selection criteria is satisfied, it passes control to a designated language-specific interface validation exit. This exit then determines if any of the external references must be renamed.

Syntax

```
►►──CEEXVSEL──LAND_IV_EXIT=──lang_exit──┬──────────────────────────────┬──►
                                        └─,STACK=──stack_size──────────┘

►──┬──────────────────────────┬──┬──────────────────────────────┬──────►
   └─,STATIC=──static_size────┘  └─,CALLING_IDR=──'calling_idr'─┘

►──┬──────────────────────────────────────────────────────────────┬──────►
   └─,TARGET_IDR=──'target_idr'──────────────────────────────────┘

►──┬──────────────────────────────────────────────────────────────────┬──►
   │                          ┌──────────────────────────┐            │
   │                          ▼                          │            │
   └─,TARGET_SECTION_PREFIX=──(──'target_sect_pref'──┬──┬──┘            │
                                                     └─)─┘            ┘

►──┬──────────────────────────┬──────────────────────────────────────►◄
   └─,RESOLVED=──NO───────────┘
```

lang_exit
: Is the name of the language-specific interface validation exit routine that is to be invoked if the criteria specified by the CALLING_IDR, TARGET_IDR, and TARGET_SECTION_PREFIX are satisfied. The conventions for coding this exit, along with the arguments passed to it, are described in “Language-Specific Interface Validation Exit” on page 179.

stack_size
: Is the maximum total amount of stack storage needed for the DSA or DSAs of *lang_exit* and any routines that it calls. If the STACK parameter is omitted, the maximum length provided is 400 bytes. No stack extensions are possible.

static_size
: Is the length of the storage area required for communication among successive invocations of *lang_exit*. A storage area of this length is provided on the first invocation and the same area passed on each successful invocation, as an

argument on each call to *lang_exit*. On the first call, the first eight bytes of the area are cleared to 0 so that *lang_exit* can determine if it has previously stored any of its data in the area.

If the STATIC parameter is omitted or is coded with a value of 0, then no such storage area is made available to *lang_exit*.

calling_idr
Is a string of characters that is compared with the IDR information associated with the control section whose external references are to be examined by the interface validation exit. The selection criterion associated with the CALLING_IDR parameter is satisfied if *calling_idr* matches the control section's IDR information.

Note: The value of *calling_idr* is compared only with the leading characters of the IDR information associated with the control section. This allows, for example, a selection based on the first few characters of the IDR information which contain the program number of a compiler without regard to any additional characters that indicate the version and release of the compiler.

If the CALLING_IDR parameter is omitted, then the IDR information for the control section containing the external references is not used to eliminate the control section for further analysis of its external references. In this case, at least one of the other selection parameters is required.

target_idr
Is a string of characters that is compared with the IDR information associated with the control sections that contain the entry points in the reference list. (These are the control sections that contain the entry points that the binder is about to bind with the external references that are to be validated.)

Note: The value of *target_idr* is compared only with the leading characters of the IDR information associated with the control section. This allows, for example, a selection based on the first few characters of the IDR information which contain the program number of a compiler without regard to any additional characters that indicate the version and release of the compiler. The *target_sect_pref* values are compared only with the leading characters of the section names in the reference list.

The selection criterion associated with the TARGET_IDR parameter is satisfied if there is at least one entry point whose control section has IDR information that matches *target_idr*.

If the TARGET_IDR parameter is omitted, then the IDR information for control sections containing entry points in the reference list is not used to suppress further analysis of external references. In this case, at least one of the other selection parameters is required.

If the TARGET_IDR parameter is used, then the RESOLVED=NO parameter must not be used in the same macro invocation.

target_sect_pref
Is a string of characters that is compared with the names of the control sections that contain the entry points in the reference list. (These are the control sections that contain the entry points that the binder is about to bind with the external references that are to be validated.)

The selection criterion associated with the TARGET_SECTION_PREFIX parameter is satisfied if the reference list has at least one entry point in a control section whose name begins with one of the *target_sect_pref* values.

If the TARGET_SECTION_PREFIX parameter is omitted, then the names of control sections containing the entry points in the reference list are not used to suppress further analysis of external references. In this case, at least one of the other selection parameters is required.

If the TARGET_SECTION_PREFIX parameter is used, then the RESOLVED=NO parameter must not be used in the same macro invocation.

RESOLVED=NO
This selection criterion is satisfied if there is at least one unresolved reference.

If you use the RESOLVED=NO parameter, you cannot specify the TARGET_IDR or the TARGET_SECTION_PREFIX parameters in the same macro invocation.

Selection Criterion Parameters

The following parameters are called *selection criterion parameters*; at least one is required on each CEEXVSEL macro instruction to control if the language-specific interface validation exit, *lang_exit*, is to be entered.

- CALLING_IDR
- TARGET_IDR
- TARGET_SECTION_PREFIX
- RESOLVED=NO

If more than one of the selection criterion parameters is given on a single CEEXVSEL macro instruction, all of the specified criteria must be satisfied for the exit to be invoked.

The order of the CEEXVSEL macro instructions in the routine CEEPINTV controls the order in which the selection criteria are evaluated. Once the selection criteria on any CEEXVSEL macro instruction are satisfied, the corresponding language-specific interface validation exit is invoked, and the selection criteria on subsequent CEEXVSEL macro instructions, if any, are not evaluated.

Language-Specific Interface Validation Exit

A language-specific interface validation exit is a routine that is entered if the selection criteria specified by a CEEXVSEL macro invocation are satisfied. Its name should follow the naming conventions for exits described in topic 176. It should be written as a Language Environment-enabled non-XPLINK assembler language program, which conforms to the restrictions that follow.

Restrictions on the Use of Language Environment Services

Only a limited Language Environment-style environment is established for use by the language-specific interface validation exit(s). This means that there are no initialization services, no condition handling services, no message services, no program management services, and no heap services. The mini-environment that is made available is what is provided through the system programming C facility. (It is a “Persistent C Environment”, as described in *z/OS C/C++ Programming Guide*.) There is enough of an environment to provide a stack for use by a language-specific interface validation exit so long as no library services are used.

If the language-specific interface validation exit is written in assembler, it must be reentrant. Should any persistent data need to be kept between successive invocations of the same exit, the communication area must be used; the length of

this area is specified in the STATIC parameter of the CEEXVSEL macro instruction, and its address is available through the anchor word argument that is passed to the exit (see “Arguments Passed to Language-Specific Interface Validation Exits”).

Arguments Passed to Language-Specific Interface Validation Exits

The following nine arguments are passed to each language-specific interface validation exit. These arguments are similar to, but not identical to, those passed by the binder to an interface validation exit (see “Language Environment Interface Validation Exit” on page 175). Standard linkage conventions are followed, that is, register 1 contains the address of a list of addresses of these arguments:

1. Function Code. A 1-byte function code with value of 'V' indicating the Validate function. This differs from what the binder provides because the language-specific interface validation exit is entered only for the Validate function and not for the Start and End functions.
2. Anchor Word. A 4-byte pointer to a structure consisting of the following two fields:
   a. A 4-byte pointer to a communication area of the length given by the STATIC parameter of the CEEXVSEL macro instruction. The same area is provided for each call to the same language-specific interface validation exit. On the first call, the first eight bytes of the area are cleared to 0 so that language-specific interface validation exit can determine whether it has previously stored any of its data in the area.
   b. A 4-byte pointer to the first applicable reference list entry (see “Structure of the Language Environment Interface Validation Exit” on page 176 for information about the reference list).

      If there is neither a TARGET_IDR nor a TARGET_SECTION_PREFIX parameter on the CEEXVSEL macro instruction, this is a pointer to the first list entry for the section being validated and has the same value as the “Reference List” parameter.

      If there is one or both of the TARGET_IDR and a TARGET_SECTION_PREFIX parameters, this is a pointer to the first list entry that satisfies these selection criteria. Note, however, that subsequent list entries may not satisfy these selection criteria.
3. This parameter has no meaning in this context.
4. Section name. A varying string containing the name of the section being validated.
5. Section vaddr. A 4-byte pointer to the beginning of the first text element in the section being validated. This may not be useful in a multi-class module, since there is no designated ″primary″ class. This field is reserved for future use.
6. Section IDRL. A 4-byte pointer to the IDR entry for the section in process. The IDR data entry consists of a halfword length field containing the length of the data followed by the data.
7. Reference List. A 4-byte pointer to a list of unchecked references. For a discussion of the reference list, see “Reference List” on page 181.
8. Return code. A fullword return code in which the overall status of the exit is to be returned. It will be initialized to zero on invocation of the exit. The following values may be set by the language-specific interface validation exit:
   0 OK, no further processing required of this section. The action code for all references is zero.
   4 Further processing required by the binder, as indicated in the returned action codes.

12 Severe error. Make no more calls to the exit and do not save the module (unless the binder option LET=12).
16 Terminate binder processing immediately.

9. Returned message. A 4-byte pointer in which may be returned the address of a halfword length field and a string allocated by the language-specific interface validation exit, and containing a message to be printed by the binder. The returned message must not be longer than 1000 bytes. The binder will prefix the returned message with its own message number. The returned message will be initialized to the null string so that the exit routine need not take any action unless a message is to be issued. For more information about message handling, see “Message Handling” on page 183.

Reference List

The seventh argument passed to the language-specific interface validation exit is the reference list. The reference list is a linked list containing one entry for each unchecked ER in the section. References marked NOCALL or NEVERCALL will not be included in the list. The last entry in the list contains zero in the link field. A reference entry is 64 bytes in length. The reference entry fields are shown in Table 22.

Table 22. Interface Validation Exit Reference Entry Fields

Offset	Type	Len	Name	Description
(0)	Address	4	REFL_NEXT	Address of next list entry[3]
(4)	Address	4	REFL_T_SYMBOL	Address of referenced symbol[2]
(8)	Address	4	REFL_T_SECTION	Address of target section name[2, 8]
(C)	Address	4	REFL_T_ELEMENT	Address of target element[1, 8]
(10)	Address	4	REFL_T_DESCR	Address of target descriptors[1, 8]
(14)	Address	4	REFL_T_IDR	Address of target IDR[1, 5, 8]
(18)	Bit	4	REFL_T_ENVIR	Target environment[1, 6, 8]
(1C)	Character	8	REFL_T_SIGN	Target signature[8]
(24)	Address	4	REFL_T_ADCONS	Adcon list anchor[1]
(28)	Address	4	REFL_C_DESCR	Address of caller descriptors[1]
(2C)	Bit	4	REFL_C_ENVIR	Caller’s environment[1, 6]
(30)	Character	8	REFL_X_SIGN	Exit signature[4, 9]
(38)	Address	4	REFL_X_SYMBOL	New symbol (Char(*) varying)[4, 7, 9]
(3C)	Unsigned	2	REFL_X_ACTION	Action code[4, 9, 10]
(3E)	Unsigned	2		Reserved[1]

Table 22. Interface Validation Exit Reference Entry Fields (continued)

Offset	Type	Len	Name	Description

Notes for Interface Validation Exit Reference Entry Fields:

1. Field must be zero.
2. Address points to varying character string, which must begin with a halfword length field containing current length, excluding length field.
3. Last entry in list set to zero.
4. Output field; set by exit routine.
5. IDR data is returned in the following format:

```
 0  CHAR    10  Processor Identification
10  CHAR     2  Processor Version
12  CHAR     2  Processor Modification Level
14  CHAR     7  Date Compiled or Assembled (yyyyddd)
```

   The above 21-byte structure is preceded by a halfword length. The length may contain zero or any multiple of 21, allowing for multiple IDRs.
6. Environmental bit settings are not yet defined.
7. The exit routine must allocate and initialize a varying length character string, consisting of a halfword length field, containing the length of the symbol, immediately followed by the symbol itself. The address of this varying string must be stored in the REFL_X_SYMBOL field in the reference list.
8. Target fields will contain binary zeros for unresolved references.
9. Output fields will be initialized to binary zeros on invocation of the exit routine.
10. One of the following action codes should be returned for each reference entry:

    0 No special processing such as changing the bind status flags, renaming the reference, or storing signatures required for this reference.

    1 Validation successful. Store the exit signature in both LD and ER records.

    2 Validation successful. Store glue code address in all referring adcons and store the exit signature in both LD and ER records.

    3 Accept unresolved reference. Do not store the exit signature in the ER record. Reference will be treated as a weak reference and will not affect the return code from the binder.

    4 Retry. New symbol has been provided for reference. Do not store signatures at this time. Reprocess autocall, if necessary, and re-validate.

    5 Validation failed. Mark reference unresolved and do not store signatures at this time. The return code from the binder will reflect that there was at least one unresolved reference.

Changing an External Reference

It is the language-specific interface validation exit that must decide whether a given external reference is to be changed, and if it is, to provide the new name.

The routine should assume that the selection criterion specified by the CALLING_IDR parameter, if any, on the applicable CEEXVSEL macro instruction is already satisfied and does not need to be examined again. However, if one or both of the TARGET_IDR and TARGET_SECTION_PREFIX parameters are given, the applicable selection criteria are satisfied for the identified reference list entry but may not be for subsequent entries.

The language-specific interface validation exit can decide whether to rename an external reference based on one or more of the following pieces of information.

Note that the first two are constant for each binder entry to the Language Environment interface validation exit and each of its calls to the language-specific interface validation exits. The others apply to the individual external references as reflected in the reference list entries. For more information about the reference list, see “Reference List” on page 181.

1. The name of the control section containing the external references.
2. The IDR information associated with the section that contains the external references. (This indicates the compiler, including its release, that produced the compiled code.)
3. The name of an external reference.
4. The name of a target control section, that is, the control section that contains the entry point with which the external reference is about to be bound. (In the event that the external reference is as yet unresolved, the address of the section name (REFL_T_SECTION) has a value of 0.)
5. The IDR information associated with a section that contains the entry point with which the external reference is about to be bound.

The language-specific interface validation exit can rename an external reference by:

1. Placing the address of the new name to be used as the external reference in the REFL_X_SYMBOL field in the reference list entry
2. Setting a value of 4 as the action code (REFL_X_ACTION field) in the reference list entry
3. Setting a value of 4 in the return code parameter that was provided to the exit.

When an external reference is renamed in this manner, the binder then uses autocall if necessary to locate the new name.

The language-specific interface validation exit can cause an external reference to become unresolved by:

1. Setting a value of 3 or 5 as the action code (REFL_X_ACTION field) in the reference list entry;
2. Setting a value of 4 in the return code parameter that was provided to the exit.

Message Handling

If the language-specific interface validation exit detects an error, it can request that the binder print a message which is contained in a **CEE***fff***XM** module, which contains messages text (see topic 176.) The exit requests that a message be printed by placing the address of the appropriate message text in the pointer which is the last argument to the language-specific interface validation exit.

Communication between the language-specific interface validation exit and the **CEE***fff***XM** module is a private interface between these two modules. A reasonable scheme would be for there to be a vector of address constants at the beginning of **CEE***fff***XM**. Each would point to a halfword-prefixed message text string so that in response to a request that a specific message be printed the language-specific interface validation exit would move one of those address constants into the pointer given as the argument for the returned message.

There is no provision for message inserts. Only one message can be requested per invocation of the Language Environment interface validation exit by the binder. No message should be requested except in the event of error.

Example of a Language-Specific Interface Validation Exit

Here's an example of the interaction of the main Language Environment interface validation exit (module CEEPINTV) with a language-specific interface validation exit.

First, assume that the module CEEPINTV contains the following two CEEXVSEL macro instructions:

```
      CEEXVSEL LANG_IV_EXIT=CEEEDCX0,                                X
               CALLING_IDR='5655121',                                X
               RESOLVED=NO
*
      CEEXVSEL LANG_IV_EXIT=CEEAFHX0,                                X
               CALLING_IDR='5668-806',                               X
               TARGET_SECTION_PREFIX='EDC'
```

These two CEEXVSEL macro instructions will select sections meeting either of the two sets of selection criteria:

1. The section being validated has IDR information that begins with the seven characters '5655121', which represents the AD/Cycle C/370 compiler, and there is at least one external reference that is unresolved.
2. The section being validated has IDR information that begins with the eight characters 5668-806, which represents the VS FORTRAN Version 2 compiler, and there is at least one external reference that is resolved in to a section whose name begins with the three characters EDC.

(Remember that the Language Environment interface validation exit is entered with a Validate function code once for each section that contains external references.)

The main Language Environment interface validation exit (CEEPINTV) examines the section being validated and its external references. If the first set of criteria is satisfied, control is passed to the C-specific interface validation exit whose name is CEEEDCX0. Upon return from CEEEDCX0, control returns to the binder without examination of the second set of selection criteria. However, if the first set of criteria is not satisfied but the second set is, control is passed to the Fortran-specific interface validation exit whose name is CEEAFHX0.

For this example, assume that only the second set of selection criteria is satisfied so that the Fortran-specific language validation exit named CEEAFHX0 would be entered. In this case, this means that the section being validated was produced by the VS FORTRAN Version 2 compiler and that at least one of its external references is being resolved into a section whose name begins with the characters EDC, which likely indicates a C library routine. Also, assume that the purpose of CEEAFHX0 is to change the external reference SQRT to AFHFSSQS if the binder was about to bind SQRT to an entry point in the C library routine EDC1@0C4. Figure 58 on page 185 shows how CEEAFHX0 could do this.

```
CEEAFHX0 CEEENTRY PPA=PPAX0,MAIN=NO,BASE=11
*
*  INITIALIZE POINTERS
*
         L     2,4(,1)                PTR TO PTR TO ANCHOR BLOCK
         L     2,0(,2)                PTR TO ANCHOR BLOCK USING ANCHOR_BLOCK,2
         L     2,AB_REFL              FIRST REFERENCE LIST ENTRY
         USING REFL,2
*
*  CHECK FOR SQRT AS EXTERNAL REFERENCE IN REFERENCE LIST ENTRY*
*
LOOP_NXT L     3,REFL_T_SYMBOL        EXTERNAL REFERENCE
         LA    0,L'SQRT_SY            SQRT NAME LENGTH
         CH    0,0(,3)                IS REF LIST ER NAME SAME LENGTH?
         BNE   LOOP_CTL               NO, CAN'T BE THE ER WE'RE SEEKING
         CLC   SQRT_SY,2(3)           IS REF LIST ER NAME WHAT WE WANT?
         BE    GOT_SQRT               YES, GO ANALYZE IT FURTHER
*
*  NOT SQRT SO GO CHECK NEXT REFERENCE LIST ENTRY IF ANY
*
LOOP_CTL L     2,REFL_NEXT            NEXT REFERENCE LIST ENTRY
         LTR   2,2                    IS THERE ANOTHER ENTRY?
         BNE   LOOP_NXT               YES, GO CHECK IT
*
*  RETURN *
*
DONE     CEETERM ,                    RETURN TO CALLER
*
*  EXTERNAL REFERENCE IS SQRT; CHECK IF IN C LIBRARY TARGET SECTION
*
GOT_SQRT L     3,REFL_T_SECTION       TARGET SECTION NAME
         LA    0,L'CSQRT_SY           C SQRT TARGET SECTION NAME LENGTH
         CH    0,0(,3)                IS REF LIST TARGET SECTION NAME
*                                     THIS SAME LENGTH?
         BNE   DONE                   NO, CAN'T BE SECT WE'RE SEEKING
         CLC   CSQRT_SY,2(3)          IS TARGET SECTION THE NAME OF
*                                     C LIBRARY ROUTINE WE WANT?
         BNE   DONE                   NO, EXIT (CAN'T BE ANOTHER SQRT)
*
*  CHANGE EXTERNAL REFERENCE FROM SQRT TO AFHFSSQS*
*
         LA    0,FSSQS_LN             NEW SYMBOL TO USE AS ER
         ST    0,REFL_X_SYMBOL        SAVE IN REFERENCE LIST ENTRY
         LA    1,4                    ACTION CODE FOR NEW ER NAME
         STH   1,REFL_X_ACTION        SAVE IN REFERENCE LIST ENTRY
         B     DONE                   DONE.  (CAN'T BE ANOTHER SQRT)
```

Figure 58. CEEAFHX0 Example (Part 1 of 2)

```
*
*  EXTERNAL REFERENCE BEING VALIDATED AND REPLACEMENT SYMBOL
*
SQRT_SY  DC    C'SQRT'
*
FSSQS_LN DC    Y(L'FSSQS_SY)
FSSQS_SY DC    C'AFHFSSQS'
*
*  SECTION NAME OF C LIBRARY ROUTINE THAT CONTAINS THE C SQRT LD
*
CSQRT_SY DC    C'EDC1@0C4'
*
*  PPA1 AND PPA2
*
PPAX0   CEEPPA
*
*  ANCHOR BLOCK (POINTED TO THROUGH SECOND ARGUMENT)
*
ANCHOR_BLOCK   DSECTAB_STATIC      DS    A           ADDRESS OF STATIC AREA
AB_REFL        DS    A           ADDRESS OF FIRST APPLICABLE
*                                   REFERENCE LIST ENTRY
*
*  REFERENCE LIST ENTRY*
REFL           DSECT
*
REFL_NEXT      DS    A           ADDRESS OF NEXT LIST ENTRY
REFL_T_SYMBOL  DS    A           ADDRESS OF REFERENCED SYMBOL
REFL_T_SECTION DS    A           ADDRESS OF TARGET SECTION NAME
REFL_T_ELEMENT DS    A           ADDRESS OF TARGET ELEMENT
REFL_T_DESCR   DS    A           ADDRESS OF TARGET DESCRIPTORS
REFL_T_IDR     DS    A           ADDRESS OF TARGET IDR
REFL_T_ENVIR   DS    XL4         TARGET ENVIRONMENT
REFL_T_SIGN    DS    CL8         TARGET SIGNATURE
REFL_T_ADCONS  DS    A           ADCON LIST ANCHOR
REFL_C_DESCR   DS    A           ADDRESS OF CALLER DESCRIPTORS
REFL_C_ENVIR   DS    XL4         CALLER'S ENVIRONMENT
REFL_X_SIGN    DS    CL8         EXIT SIGNATURE
REFL_X_SYMBOL  DS    A           NEW SYMBOL (CHAR(*) VARYING)
REFL_X_ACTION  DS    H           ACTION CODE
               DS    H           RESERVED
*
           CEEDSA ,
           CEECAA ,
           END
```

Figure 58. CEEAFHX0 Example (Part 2 of 2)

Interface for Preinitialization

This section describes the preintialization functions that are intended for use as CWIs. For information about other valid invocations, see *z/OS Language Environment Programming Guide*.

CEEPIPI (call_sub_addr_nochk) and CEEPIPI (call_sub_addr_nochk2) — Invocation for Subroutine by Address

Each invocation of CEEPIPI (call_sub_addr_nochk) or CEEPIPI (call_sub_addr_nochk2) invokes a specified routine by address, which is similar to CEEPIPI(call_sub_addr), but does not perform Language Environment anchor look-up, set, or reset. Both of these CWI interfaces to CEEPIPI are intended to be used when the Language Environment environment is initialized and terminated in one task control block (TCB) or address space but is used from a different TCB or from an SRB, in the same or a different address space.

Both CWIs are supported only in the CEEPIPI(init_sub_dp) environment, which must be initialized with TRAP(ON,NOSPIE), INTERRUPT(OFF), and NOTEST. If the CEEPIPI(init_sub_dp) interface is used to establish multiple Language Environment environments under the same address space, the routine must not use z/OS UNIX functions. For additional information, see *z/OS C/C++ Run-Time Library Reference*.

The Language Environment environment identified by the *token* is activated before the called routine is invoked. After the called routine returns, the environment is dormant.

Syntax

call CEEPIPI (*call_sub_addr_nochk, routine_addr, token, parm_ptr, sub_ret_code, sub_reason_code, sub_feedback_code*)

```
INT4     *call_sub_addr_nochk;
POINTER  *routine_addr;
INT4     *token;
POINTER  *parm_ptr;
INT4     *sub_ret_code;
INT4     *sub_reason_code;
INT4     *sub_feedback_code;
```

Syntax

call CEEPIPI (*call_sub_addr_nochk2, routine_addr, token, parm_ptr, sub_ret_code, sub_reason_code, sub_feedback_code*)

```
INT4     *call_sub_addr_nochk2;
POINTER  *routine_addr;
INT4     *token;
POINTER  *parm_ptr;
INT4     *sub_ret_code;
INT4     *sub_reason_code;
INT4     *sub_feedback_code;
```

call_sub_addr_nochk **(input)**
a fullword function code (integer value of 12) that specifies the CEEPIPI request for calling a C main routine and obtaining writable static. The *routine_addr* specified must be CEESTART. The entry point called will then be the main entry point specified in the CEEMAIN referenced by that CEESTART. For more information on CEESTART and CEEMAIN, see “CEESTART” on page 130 and “CEEMAIN” on page 136 and *z/OS C/C++ User’s Guide*.

call_sub_addr_nochk2 **(input)**
a fullword function code (integer value of 14) that specifies the CEEPIPI request for calling a C, C++, PL/I, or Language Environment-conforming assembler subroutine.

routine_addr **(input)**
a doubleword containing the address of the routine that should be invoked. The first fullword contains the entry point address; the second fullword must be zero.

token **(input)**
a fullword with the value of the token returned by CEEPIPI(init_sub_dp) when the Language Environment environment is initialized. The *token* must identify a previously pre-initialized environment that is not active at the time of call. You must not alter the value of the *token*.

parm_ptr **(input)**
a parameter list pointer or 0 (zero) that is placed in register 1 when the routine is executed. Run-time options are not obtained from this parameter.

sub_ret_code **(output)**
the subroutine return code.

sub_reason_code **(output)**
the subroutine reason code; this is 0 for normal subroutine returns.

sub_feedback_code **(output)**
the feedback code for enclave termination; this is the CEE000 feedback code for normal subroutine returns.

A return code is provided in register 15 and can contain the following values:

0 The environment was activated and the routine called.
4 The *function_code* is not valid.
8 CEEPIPI was called from a Language Environment-conforming HLL.
12 The indicated environment was not initialized to allow multiple Language Environment environments for subroutines.
16 The token is invalid.
28 A PL/I STOP, C exit(), or unhandled condition with severity 2 or greater occurred.
36 The language of the subroutine is not present in the environment identified by token.

Usage Notes:

1. This CWI is supported in the init_sub_dp environment only.
2. Thei init_sub_dp environment must be initialized with TRAP(NOSPIE), INTERRUPT(OFF), and NOTEST.
3. The routine must be written in PL/I, C, C++, and must be reentrant or written in Language Environment-conforming assembler.
4. The routine must not contain PL/I STOP or C exit() calls. PL/I STOP and C exit() will cause a Language Environment enclave termination. Such termination will cause an unpredictable result because the TCB for the CALL time is different from the TCB for the INIT/TERM time.
5. If the PL/I or C routine calls an Assembler routine, the Assembler routine must not contain an SVC LINK; LINK will cause a Language Environment enclave initialization. Such initialization will cause unpredictable results because the TCB for the CALL time is different from the TCB for the INIT/TERM time.
6. The caller of this CWI is responsible to establish its own error recovery for hardware- and software-detected errors; otherwise, the Language Environment condition manager will be in control. The Language Environment condition manager will terminate the current Language Environment enclave and/or process for any unhandled condition with severity 2 or greater. Such termination will cause unpredictable results because the TCB for the CALL time is different from the TCB for the INIT/TERM time.
7. If the CEEPIPI(init_sub_dp,...) interface is used to establish multiple Language Environment environments under the same address space, the routine must not use z/OS UNIX® functions.
8. The Language Environment Math services can be called when using the *call_sub_addr_nochk* function.
9. Nested enclaves are not supported when *call_sub_addr_nochk* is used while in System Request Block (SRB) mode.

10. The language of the routine must already be present in Language Environment, identified by *token*. This is done by including a routine coded in the same language in the PIPI table used during initialization of the environment.

The Preinitialization Environment and System Request Block (SRB) Mode

Initializing the Preinitialization Environment

Language Environment requires that a preinitialization environment be initialized while running in task mode. For a preinitialization environment to be able to run in SRB mode, initialize the preinitialization environment by using the CEEPIPI init_sub_dp function (function code 9).

Calling the Preinitialization Environment in SRB Mode

To call the preinitialization environment while running in SRB mode, the call must be made using the CEEPIPI call_sub_addr_nochk function (function code 12 if calling a C main routine and obtaining writable static, function code 14 if calling a C subroutine). ″nochk″ indicates that Language Environment will not perform any processing that depends on a TCB address, such as anchor look-up, set, or reset.

Preinitialization Service Routines

Restrictions exist when running a routine in SRB mode. For instance, an SRB routine cannot issue any SVCs (except for ABEND). This restriction causes difficulties when attempting to use Language Environment in SRB mode; since the default operating system services that Language Environment uses make calls to SVCs.

The preinitialization services offer a solution. By specifying a Service Routine Vector while initializing the preinitialization environment, an application can replace the basic operating system service routines that Language Environment provides, supplying alternative services or mechanisms to accomplish the same function.

The following service routines can be replaced through the use of the Service Routine Vector:

- Load Module
- Delete Module
- Get Storage
- Free Storage
- Handle Exception
- Process Message

To run in SRB mode, each of the listed service routines must be replaced. The following sections explain ways to perform the function for each service routine while in SRB mode. For details on the interfaces to these services, see *z/OS Language Environment Programming Guide*.

Module Load/Delete Routines: One way to provide module loads while in SRB mode requires:

1. Forcing all modules to be loaded during initialization of the preinitialization environment. During CEEPIPI init_sub_dp processing, Language Environment does not necessarily load all of the modules required by the application. One way to force Language Environment to load these modules is to provide a dummy C function in the PIPI table passed to Language Environment during

initialization of the preinitialization environment. Language Environment will detect that the C language is present, load the C event handler, and call C for initialization, which will cause C to load additional modules.

Language Environment's math functions reside in a separate load module that is not normally loaded. To get the math module loaded while still in task mode, include a call to a math function in the dummy C function. Once Language Environment has completed initialization of the preinitialization environment, the application's initialization routine can then call the dummy function by using the CEEPIPI call_sub function (function code 4). The dummy function's call to the math function forces Language Environment to load the math module.

2. Keeping track of the name and entry point of each module that is loaded during initialization. One way is for the application to provide its own load and delete service routines. During initialization of the preinitialization environment, when Language Environment calls the application's load service routine for each module, it performs a normal load, saving the module name and entry point address in a table. When the load service routine is called in SRB mode, it simply looks up the module name in the table and returns its entry point address to the caller. Unless cleanup of the modules is required at some point, the delete service can simply return to its caller, leaving the module in storage for the next caller.

Another method for providing module loads while in SRB mode is to have the application set up ″worker″ tasks in its address space during initialization. The application's load service routine can create a work request, queue it to a work queue, and then SUSPEND the SRB. Once the worker task has processed the load, it can return the module entry point to the SRB, and RESUME it. Once loaded, the module can be left in storage, and the load service routine can track its location.

Storage Get/Free Routines: The Storage Get and Free routines can be replaced with routines that use the z/OS STORAGE OBTAIN and STORAGE RELEASE services, respectively. These macros do not issue SVCs; instead, they issue a Program Call (PC) instruction, which is allowable in SRB mode.

Exception Routine: To use a preinitialization environment in SRB mode, Language Environment requires that the environment be initialized with the TRAP(OFF), INTERRUPT(OFF), and NOTEST run-time options. These options prevent Language Environment from establishing exception handlers under the current task, which does no good when the preinitialization environment is called from an SRB routine.

If the application requires exception handling, it can establish its own by providing an exception routine in the Service Vector Routine. Language Environment calls the exception routine during init_sub_dp processing to inform the application of the address of the Language Environment condition handling routine to call when an exception occurs, as well as providing a list of exceptions in which the condition handler is interested. Figure 59 on page 191 shows when the exception routine is called during initialization.

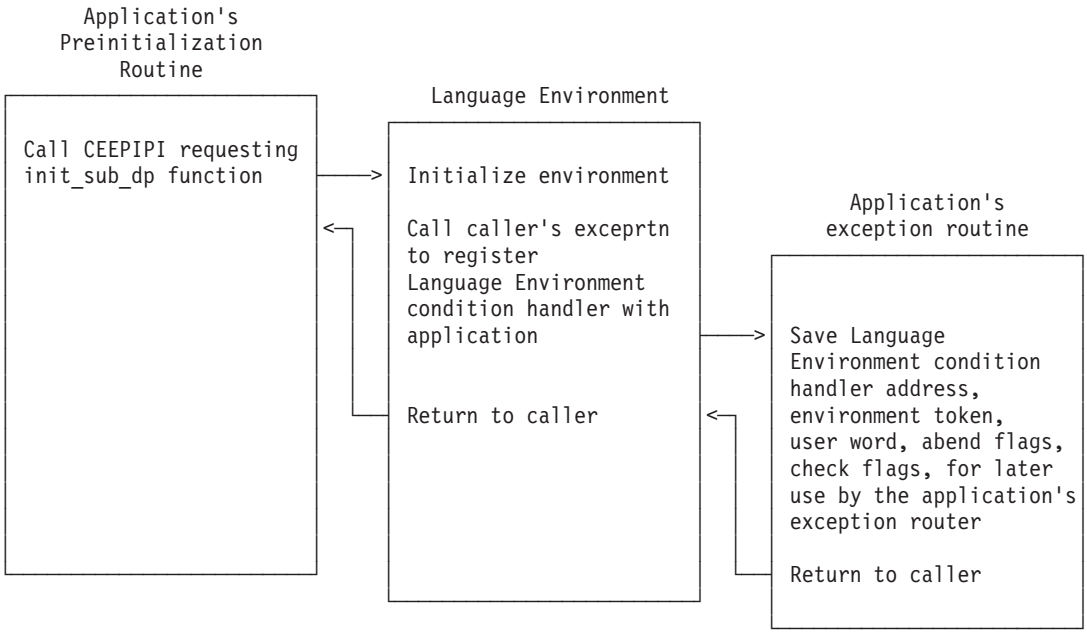

Figure 59. Preinitialization Environment Initialization exceprtn Flow (Task Mode)

When the application's SRB routine gets control, it must establish its own exception handler before calling the preinitialization environment. It can do so by invoking the SETFRR service to establish an FRR.

If an exception occurs during a call to the preinitialization environment, the application's exception handler receives control. By examining the SDWA and the information provided by Language Environment during the initial call to the exception routine, the exception handler can determine whether Language Environment is interested in the exception. If so, then the exception handler calls the Language Environment condition handler. Language Environment then drives whatever HLL exception handling routines the application has established.

Under certain conditions, Language Environment calls the application's exception routine to register another level of exception handling. This call will not occur while the application's exception handler is in control. Figure 60 on page 192 shows the control flow during exception handling for an SRB mode application.

Preinitialization Interface

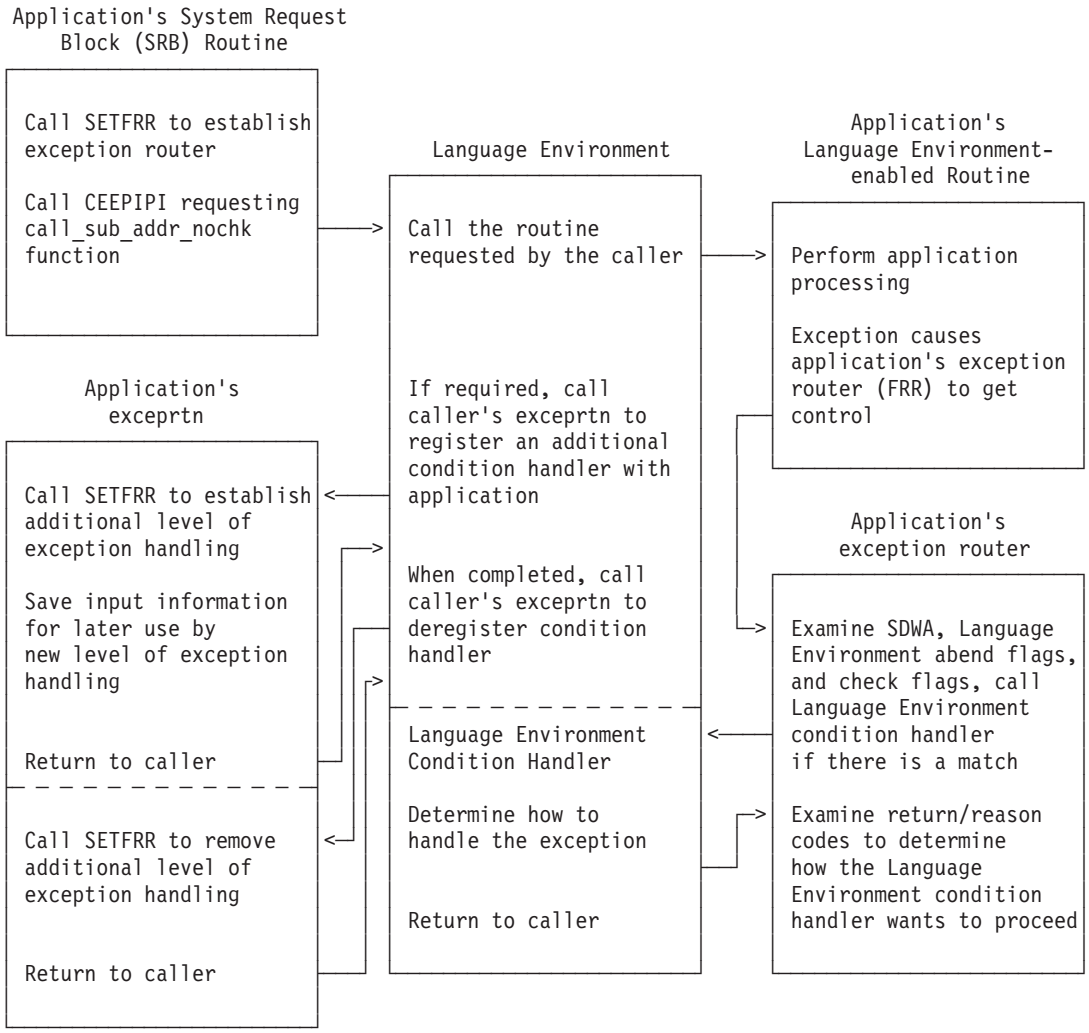

Figure 60. Preinitialization Environment Exception Flow (SRB Mode)

Message Routine: One method for providing message handling while in SRB mode is to have the application set up ″worker″ tasks in its address space during initialization. The application's message service can create a work request from the message, queue it to a work queue, and post the worker task to process it asynchronously.

In cases where the application is not interested in the messages, the message routine can ignore the message by simply returning to its caller.

Chapter 4. Storage Management

The Language Environment storage manager provides services that control the stack and heap storage used at run time. These services extend to Language Environment member languages and assembler language routines which adopt this storage protocol. Storage Management consists of:

- Storage allocation
- Storage clean-up
- Service call routines

The initial allocation of STACK storage is done by Language Environment initialization routines. The initial allocation of HEAP storage is done upon the first request for HEAP storage. The storage manager:

- Manages STACK and HEAP storage above and below the 16 MB line
- Manages any subsequent allocations of STACK or HEAP
- Interfaces with host operating system to allocate/free storage
- Detects the short-on-storage condition and signal the exception handler
- Releases (or keeps track) of free storage segments
- Cleans-up resources at termination

Stack storage is managed in two stack queues. The primary stack queue is the user stack. The user stack is directed above or below the 16 MB line by the STACK run-time option. The secondary stack queue is the library stack which is always directed below 16 MB for use by routines needing a DSA (dynamic storage area) below the 16 MB line. Library DSAs can be obtained from the user stack, but user DSAs can not be obtained from the library stack. All stack storage is managed at each individual thread level; stacks are not shared across threads.

Heap storage can either be directed anywhere or below the 16 MB line.

In addition to storage manager, Language Environment provides an interface to a vendor heap manager for use with C/C++ applications.

Dynamic Storage (Heap) Services

This section describes the various types of heap storage and covers the services provided to acquire, release, and manage the heap storage.

Model

The Language Environment storage model is based on a model of multiple heaps that can be dynamically created and discarded. Each heap has a unique *heap-ID*.

The Language Environment storage model includes a single heap sub-model for languages whose intrinsic storage model does not comprehend multiple heaps. A single heap model does not have all the function of the multiple heap model. Missing from the model are group de-allocation capabilities. The initial heap cannot be discarded. Table 23 on page 194 lists all Language Environment heaps and their purpose.

© Copyright IBM Corp. 1991, 2002

Table 23. Heap IDs Recognized by Language Environment Heap Manager

Heap Name	Heap-ID	Intended Purpose	Created by	Disposed of by
Initial Heap	0	Application program data.	Language Environment initialization; size and location are determined from HEAP run-time option.	Language Environment termination
Extended Initial Heap	(returned by **CEECRHP**)	Application program data.	Call **CEECRHP**. Size and location determined from HEAP run-time option.	Call **CEEDSHP**, or Language Environment termination
Language Environment/ language anywhere heap	`CEEEDBANHP`	Run-time library data that can reside above 16 MB (Language Environment and member language control blocks).	Language Environment initialization. Storage can reside either above or below 16 MB; size determined from installation default.	Language Environment termination
Language Environment/ language below heap	`CEEEDBBEHP`	Run-time library data required to reside below 16 MB (Language Environment and member language DCBs).	Language Environment initialization. Storage always resides below 16 MB; size determined from installation default.	Language Environment termination
Additional Heaps	(returned by **CEECRHP**)	Collections of application program data that can be quickly disposed with a single **CEEDSHP** call.	Call **CEECRHP**. Arguments define heap size and location.	Call **CEEDSHP**, or Language Environment termination

CWI to the Heap Services

Language Environment provides the following sets of CWIs for heap services:

- Routines for process-level heap storage (acquisition and release)
- Routines for region-level heap storage interface.
- Routines using a parameter list (PLIST) interface. Call these CWI interfaces as follows (`xxxx` has the appropriate offset value listed in Table 24):

```
L     R12,A(CAA)            Get the address of CAA in R12
L     R15,CEECAACELV-CEECAA(,R12)
L     R15,xxxx(,R15)
BALR  R14,R15
```

Table 24 lists the interfaces and their corresponding callable services, which are described in more detail in the *z/OS Language Environment Programming Guide*. In each case, the parameter list for the callable service also applies to the CWI.

Table 24. Routines Using a Parameter List Interface

CWI Name	Description	Callable Service	Decimal Offset
CEEVGTST	Allocate storage	CEEGTST	144
CEEVFRST	Free storage	CEEFRST	132
CEEVCRHP	Create a new heap	CEECRHP	164
CEEVDSHP	Discard heap	CEEDSHP	168
CEEVCZST	Reallocate storage	CEECZST	2820

Table 24. Routines Using a Parameter List Interface (continued)

CWI Name	Description	Callable Service	Decimal Offset
CEEVGTSB	Allocate storage unconditionally below 16 MB	None	2936

Member-language intrinsic functions such as *malloc* must generate a call to a member-language stub routine. The stub routine, in turn, must call the corresponding Language Environment service (for example, CEEVGTST with heap-ID 0) to allocate the heap storage.

Member-language control blocks should be allocated in the private Language Environment/language below heap only if they must reside below the 16 MB line. Most other internal control blocks should be allocated in the private Language Environment/language anywhere heap. The heap-IDs of both the Language Environment/language below heap and Language Environment/language anywhere heap are stored in the enclave data block (EDB) for easy access, but these heap-IDs are not exposed to application code.

Process-Level Heap Storage Management

Language Environment provides the following process-level storage management services. The addresses of the process-level storage routines are found in the Process Control Block (PCB) at labels CEEPCB_ZGETST and CEEPCB_ZFREEST. AMODE switching is not performed for the process-level GETMAIN and FREEMAIN.

CEEPCB_ZGETST

This routine allocates storage on behalf of the storage manager. This routine can rely upon the caller to provide a save area, which can be the **@Workarea**.

Syntax

void CEEPCB_ZGETST (*amount*, *subpool_no*, *user word*, *flags*, *stg_address*, *obtained*, *return code*, *reason code*)

```
INT4     *amount;
INT4     *subpool_no;
POINTER  *user word;
INT4     *flags;
POINTER  *stg_address;
INT4     *obtained;
INT4     *return code;
INT4     *reason code;
```

CEEPCB_ZGETST

Call this CWI interface as follows:

```
L     R15,CEECAAPCB-CEECAA(,R12)
L     R15,36(,R15)
BALR  R14,R15
```

amount **(input)**

Fixed-binary(31) amount of storage requested.

subpool_no **(input)**

Fixed-binary(31) subpool number 0-127.

user word **(input)**

Pointer to a fullword user field.

flags **(input)**
Fullword flag area. Bit zero in the flags is ON if the storage is required below the 16 MB line. The remaining bits are reserved for future use and must be zero. Bit zero in the flags is OFF if the storage required can be allocated anywhere.

stg_address **(output)**
Fullword address of the storage obtained or zero.

obtained **(output)**
Fixed-binary(31) number of bytes obtained.

return code **(output)**
Return code from CEEPCB_ZGETST service.

reason code **(output)**
Reason code from the CEEPCB_ZGETST service.

Return Code	Reason Code	Description
0	0	Successful
16	0	Unsuccessful — uncorrectable error occurred

CEEPCB_ZFREEST

The CEEPCB_ZFREEST routine frees storage on behalf of the storage manager.

Syntax

void CEEPCB_ZFREEST (*amount*, *subpool_no*, *user word*, *stg_address*, *return code*, *reason code*)

```
INT4     *amount;
INT4     *subpool_no;
POINTER  *user word;
POINTER  *stg_address;
INT4     *return code;
INT4     *reason code;
```

CEEPCB_ZFREEST
Call this CWI interface as follows:

```
L     R15,CEECAAPCB-CEECAA(,R12)
L     R15,40(,R15)
BALR  R14,R15
```

amount **(input)**
Fixed-binary(31) amount of storage to free.

subpool_no **(input)**
Fixed-binary(31) subpool number 0-127.

user word **(input)**
Pointer to a fullword user field.

stg_address **(output)**
Fullword address of the storage to free.

return code **(output)**
Return code from the CEEPCB_ZFREEST service.

reason code **(output)**
Reason code from the CEEPCB_ZFREEST service.

Return Code	Reason Code	Description
0	0	Successful
16	0	Unsuccessful — uncorrectable error occurred

Region-Level Heap Storage Management

This section describes the region-level storage management services that are provided by Language Environment. The addresses of the process-level storage routines are found in the Region Control Block (RCB) at labels CEERCB_ZGETST and CEERCB_ZFREEST. AMODE switching is not performed for the region-level GETMAIN and FREEMAIN.

CEERCB_ZGETST

This routine allocates storage on behalf of the storage manager. This routine can rely upon the caller to provide a save area, which can be the **@Workarea**. The parameter list that is passed contains the following:

Syntax

void CEERCB_ZGETST (*amount*, *subpool_no*, *user word*, *flags*, *stg_address*, *obtained*, *return code*, *reason code*)

```
INT4     *amount;
INT4     *subpool_no;
POINTER  *user word;
INT4     *flags;
POINTER  *stg_address;
INT4     *obtained;
INT4     *return code;
INT4     *reason code;
```

CEERCB_ZGETST

Call this CWI interface as follows:

```
L     R15,CEECAARCB-CEECAA(,R12)
L     R15,32(,R15)
BALR  R14,R15
```

amount **(input)**
Fixed-binary(31) amount of storage requested.

subpool_no **(input)**
Fixed-binary(31) subpool number 0-127.

user word **(input)**
Pointer to a fullword user field.

flags **(input)**
Fullword flag area. Bit zero in the flags is ON if the storage is required below the 16 MB line. The remaining bits are reserved for future use and must be zero. Bit zero in the flags is OFF if the storage required can be allocated anywhere.

stg_address **(output)**
Fullword address of the storage obtained or zero.

obtained **(output)**
Fixed-binary(31) number of bytes obtained.

return code **(output)**
Return code from CEERCB_ZGETSTR service.

reason code **(output)**
Reason code from the CEERCB_ZGETST service.

Return Code	Reason Code	Description
0	0	Successful
16	0	Unsuccessful — uncorrectable error occurred

CEERCB_ZFREEST

This routine frees storage on behalf of the storage manager. The parameter list passed contains the following:

Syntax

void CEERCB_ZFREEST (*amount*, *subpool_no*, *user word*, *stg_address*, *return code*, *reason code*)

```
INT4     *amount;
INT4     *subpool_no;
POINTER  *user word;
POINTER  *stg_address;
INT4     *return code;
INT4     *reason code;
```

CEERCB_ZFREEST
Call this CWI interface as follows:

```
L     R15,CEECAARCB-CEECAA(,R12)
L     R15,36(,R15)
BALR  R14,R15
```

amount **(input)**
Fixed-binary(31) amount of storage to free.

subpool_no **(input)**
Fixed-binary(31) subpool number 0-127.

user word **(input)**
Pointer to a fullword user field.

stg_address **(output)**
Fullword address of the storage to free.

return code **(output)**
Return code from the CEERCB_ZFREEST service.

reason code **(output)**
Reason code from the CEERCB_ZFREEST service.

Return Code	Reason Code	Description
0	0	Successful
16	0	Unsuccessful — uncorrectable error occurred

CEEVGTSB — Unconditional Get Heap Below

The CEEVGTSB CWI service obtains enclave heap storage below the 16 MB line and, if unsuccessful, CEEVGTSB signals a condition when the feedback code is omitted.

Syntax

void CEEVGTSB (*heap_id, size, address,* [*fc*])

```
INT         *heap_id;
INT         *size;
POINTER     *address;
FEEDBACK    *fc;
```

CEEVGTSB

Call this CWI interface as follows:

```
L     R12,A(CAA)            Get the address of CAA in R12
L     R15,CEECAACELV-CEECAA(,R12)
L     R15,2936(,R15)
BALR  R14,R15
```

heap_id **(input)**

A token denoting the heap in which the storage is allocated. If *heap_id* is not valid, the *address* is undefined and CEEVGTSB signals a condition.

size **(input)**

A number representing the amount of storage to be allocated. The amount of storage obtained is rounded to the next higher multiple of 8 bytes. Storage is always allocated below the line on a doubleword boundary. If the specified amount cannot be obtained, a condition is signaled.

address **(output)**

The machine address of the first byte of allocated storage.

fc **(output)**

The resulting feedback code. The following conditions can result from this service:

CEE000	Severity	0
	Msg_No	N/A
	Message	The service completed successfully.
CEE0P2	Severity	4
	Msg_No	0802
	Message	Storage headers are damaged.
CEE0P3	Severity	3
	Msg_No	0803
	Message	The heap identifier *heap_id* did not match any existing heap.
CEE0P8	Severity	3
	Msg_No	0808
	Message	The *size* was not a positive number.
CEE0PD	Severity	3
	Msg_No	0813
	Message	The request was larger than the storage available.
CEE3JN	Severity	0
	Msg_No	3704
	Message	Expected data at address *address*: *data*

CEE3JO	Severity	0
	Msg_No	3705
	Message	Pointer at *address* should point to a valid *controlblock*

CEEV#GTS — Get Heap Storage

The CEEV#GTS CWI allocates heap storage from a user-specified heap.

Syntax
void (ceev#gts)

CEEV#GTS

Call this CWI interface as follows:

```
L    R12,A(CAA)
L    R15,CEECAACELV-CEECAA(,R12)
L    R15,124(,R15)
BALR R14,R15
```

Parameters are passed to CEEV#GTS in registers:

R1 - (Input) Heapid (0 for user heap)
R1 - (Output) Address of storage obtained
R2 - (Input) Number of bytes of storage to obtain

Usage Notes:

1. Storage below the 16 MB line is always returned under the following conditions:
   - The caller is in AMODE 24
   - HEAP(,,BELOW) is in effect
   - The ensm_below16m_flag is set

   Storage above the 16 MB line will only be returned if the caller is in AMODE 31 and HEAP(,,ANY) is in effect.

   The caller's AMODE is determined by the high order bit of R14.

   0 - AMODE 24
   1 - AMODE 31
2. The caller must test for errors. When an error occurs, R15 will be nonzero. The caller must either handle the error or build a 96-bit feedback token and signal it.
3. The conditions that can result from this service are the same as the conditions from the CEEGTST AWI.
4. The heapid (R1 on input) must be 0 (for the user heap) or a value returned from the CEECRHP AWI callable service.

CEEV#FRS — Free Heap Storage

The CEEV#FRS CWI frees heap storage from a user-specified heap.

Syntax
void (ceev#frs)

CEEV#FRS

Call this CWI interface as follows:

```
L    R12,A(CAA)
L    R15,CEECAACELV-CEECAA(,R12)
L    R15,3452(,R15)
BALR R14,R15
```

Parameter is passed to CEEV#FRS in register 1:

R1 - (Input) Address of storage to free

Usage Notes:

1. The caller must test for errors. When an error occurs, R15 will be nonzero. The caller must either handle the error or build a 96-bit feedback token and signal it.
2. The conditions that can result from this service are the same as the conditions from the CEEFRST AWI.

CEEVHRPT — Obtain Dynamic Heap Storage Report

CEEVHRPT returns information about an application's user heap storage (specifically, enclave-level heap ID 0). CEEVHRPT returns information that is similar to the information in the user heap storage section of the report that is generated when you specify the RPTSTG(ON) run-time option.

Using CEEVHRPT, an application that is running can obtain information about heap storage. However, CEEVHRPT will not report any information that relates to the heap pool manager; rather, storage information about heap pools will be included in the number of allocated user heap bytes that is returned by the service.

Syntax

CEEVHRPT (*uheap_size, uheap_bytes_alloc, uheap_bytes_free,* [*fc*])

CEEVHRPT

Call this CWI interface as follows:

```
L     R15,CEECAACELV-CEECAA(,R12)
L     R15,4032(,R15)
BALR  R14,R15
```

uheap_size **(input)**

The total amount of user heap storage that is currently allocated by the application.

uheap_bytes_alloc **(input)**

The amount of user heap storage that is currently in use by the application.

uheap_bytes_free **(input)**

The amount of user heap storage that is currently available to the application. Note that the available storage may not be contiguous.

fc **(output/optional)**

A 12-byte feedback code that indicates the results of this service.

CEE000	Severity	0
	Msg_No	N/A
	Message	The service completed successfully.

CEE0P2	Severity	4
	Msg_No	802
	Message	Heap storage control information was damaged.
CEE3JN	Severity	0
	Msg_No	3704
	Message	Expected data at address *address*: *data*
CEE3JO	Severity	0
	Msg_No	3705
	Message	Pointer at *address* should point to a valid *controlblock*
CEE4VG	Severity	3
	Msg_No	5104
	Message	The z/OS UNIX System Services callable service BPX1PTQ failed.

User-Created Heap Services

This section describes the various types of services provided to acquire, release, and manage heap storage resulting from user-provided storage.

CEEVUHCR — Create a Heap Using User-Provided Storage

The CEEVUHCR CWI creates a heap out of storage that is provided by the caller. The heap is divided into cell pools based on the information provided in the cellpool_attrib_table. Up to 6 cell pools can be created within the heap. Note that this is a fixed-size heap; when storage within a given cell pool is exhausted, no additional storage will be allocated. CEEVUHCR returns a heap token that is used to identify the heap on subsequent user-created heap CWI calls, such as CEEVUHGT, CEEVUHFR, and CEEVUHRP.

Syntax

void CEEVUHCR (*block, size, cellpool_attrib_table, heap_token, rsvd1, rsvd2, rsvd3, rsvd4, [fc]*)

```
POINTER     *block;
INT4        *size;
POINTER     *cellpool_attrib_table;
POINTER     *heap_token;
POINTER     *rsvd1;
POINTER     *rsvd2;
POINTER     *rsvd3;
POINTER     *rsvd4;,
FEED_BACK   *fc;
```

CEEVUHCR

Call this CWI interface as follows:

```
L     R15,CEECAACELV-CEECAA(,R12)
L     R15,4060(,R15)
BALR  R14,R15
```

block **(input)**

A pointer to the storage which is to be used for the heap.

size **(input)**

The size of the block of storage. Note that Language Environment reserves

approximately 328 bytes of this storage for use in allocating heap management control blocks. Additional storage is reserved if storage report usage statistics are being collected for the heap. The amount of this storage is related to the largest cell size and the granularity of the statistics, and is calculated as: storage amount = ((largestcellsize+granularity-1)/granularity)*4.

cellpool_attrib_table **(input)**
A pointer to a structure describing the attributes of the cell pools to be created by CEEVUHCR.

The first field of the structure, number_of_pools, indicates the number of cell pools to be created. Up to 6 cell pools can be created in the heap.

The second field of the structure, granularity, indicates the granularity to which storage usage statistics are to be collected. This value must be zero, or a power of 2 greater than or equal to 8. If the value is zero, then statistics are not collected.

Following these words are pairs of words describing the attributes of each cell pool in the heap:

The first field in the pair, size, is the size of the cell in the cell pool. The cell size must be a multiple of 8 and greater than or equal to 8. Note that Language Environment adds an additional 8 bytes to the size of the cell for use in managing the cells. The second field in the pair, percentage, is the percentage of the total block size to be allocated for the cell pool.

heap_token **(output)**
A token representing the heap that was created.

rsvd1-rsvd4
Reserved for future use.

fc **(output/optional)**
The parameter into which the callable service feedback code is placed. The following conditions can result from this service:

CEE000	Severity	0
	Msg_No	N/A
	Message	The service completed successfully.
CEE0P7	Severity	3
	Msg_No	0807
	Message	An input parameter to the CEEVUHCR CWI was not valid.

CEEVUHGT — Allocate Storage From a User-Created Heap

The CEEVUHGT CWI allocates storage from the heap identified by the *heapid*. CEEVUHGT will search for an available cell within the cell pool that contains cells at least as large and closest in size to the requested size.

CEEVUHGT uses the C-style parameter interface. If successful, CEEVUHGT returns the address of the reserved cell in register 15. The returned value is NULL if a cell of the required size is not available, if size was larger than the largest available cell size, or if size was specified as 0. If CEEVUHGT returns a NULL because there is not enough storage or if the requested size was too large, it will also return an error value in `errno`. The following are the possible values of `errno`:

ENOMEM
Insufficient memory is available

E2BIG Requested amount of storage is larger than the largest available cell size

Syntax

void CEEVUHGT (*heap_token, size*)

```
POINTER     heap_token;
INT4        size
```

CEEVUHGT
Call this CWI interface as follows:

```
L     R15,CEECAACELV-CEECAA(,R12)
L     R15,4064(,R15)
BALR  R14,R15
```

heap_token **(input)**
The identifier of the user-created heap from which the storage is to be allocated.

size **(input)**
The amount of storage to be allocated.

CEEVUHFR — Return Storage to a User-Created Heap

The CEEVUHFR CWI returns storage to the heap identified by the heapid. If the returned storage does not belong to the given heap, the result is unpredictable. CEEVUHFR uses the C-style parameter interface.

Syntax

void CEEVUHFR *(heap_token, ptr*)

```
POINTER     heap_token;
POINTER     ptr
```

CEEVUHFR
Call this CWI interface as follows:

```
L     R15,CEECAACELV-CEECAA(,R12)
L     R15,4068(,R15)
BALR  R14,R15
```

heap_token **(input)**
The identifier of the user-created heap to which the storage is to be returned.

ptr **(input)**
A pointer to the storage to be returned to the heap.

CEEVUHRP — Produce a Storage Report for a User-Created Heap

The CEEVUHRP CWI generates a report of the storage used within the user-created heap identified by *heapid*. The report is directed to the ddname specified in the MSGFILE run-time option. The report format is similar to the heap pools portion of the storage report generated for the RPTSTG run-time option.

Statistics for the user-created heap will only be collected if the granularity field of the cellpool_attrib_table passed to CEEVUHCR is non-zero and a valid value.

Syntax

void CEEVUHRP *(heap_token)*

```
POINTER     *heap_token
```

CEEVUHRP

Call this CWI interface as follows:

```
L     R15,CEECAACELV-CEECAA(,R12)
L     R15,4072(,R15)
BALR  R14,R15
```

heap_token **(input)**

The identifier of the user-created heap for which a report is to be produced.

Vendor heap manager interface

Beginning with z/OS V1R3, the vendor heap manager interface allows an external heap manager product to support C/C++ applications by an event driven interface.

The following routines are supported for non-XPLINK and XPLINK:

- malloc() (C++ default operator new and default operator new[] are included)
- calloc()
- realloc()
- free() (C++ default operator delete and default operator delete[] are included)

Note: The vendor heap manager will not manage the following.

CEEGTST
CEEVGTST
CEEFRST
CEEVFRST
CEECZST
CEEVCZST
CEEVGTSB
additional heaps (CEECRHP)
user created heaps (__ucreate, __umalloc, __ufree)
ANYHEAP
BELOWHEAP

Requirements: What is required from the vendor

A vendor, wishing to provide a replacement for functions that obtain or release storage from the user heap, needs to provide a DLL that:

- will reside in either the hierarchical file system (HFS) or a PDSE
- must be a program object so the writable static area acquired for each load of the vendor heap manager does not come from the user heap storage
- must not be XPLINK since it must work for both XPLINK and non-XPLINK applications
- must contain the following exported function:

```
void __cee_heap_manager(int, void *);
```

Vendor heap manager interface

The purpose of this routine is to be the communication vehicle between Language Environment and the vendor heap manager (VHM). The communication will be in the form of event codes and data areas. The prototype for the function is in the header file,

`<edcwccwi.h>`.

The replacement should provide a ″memory manager″ that is:

- fast, when not running in debug mode and thread-safe
- storage efficient

What should the vendor know

The communication between Language Environment and the vendor heap manager (VHM) is through events and data structures. The C header, edcwccwi.h, contains the interfaces required to create a vendor heap manager. This includes the C structures required as input to the VHM event calls.

Support provided for the vendor heap manager interface

The following events are supported and are defined in:

`<edcwccwi.h>`

- _VHM_INIT - Initialization event
- _VHM_TERM - Termination event
- _VHM_CEEDUMP - CEEDUMP event

Each of these events is described below:

- Initialization event (_VHM_INIT): This event is driven during initialization of the Language Environment enclave prior to any user code being given control. The purpose of this event is for the VHM to give Language Environment the addresses of the replacement services. Language Environment will use these routines, instead of its own, to manage the user heap. The VHM can, at this time, use getenv() to query any environment variables it has defined that will customize its operation. The VHM should initialize its environment at this time, possibly allocating its own control blocks and the initial user heap segment.

  The data area passed is defined as follows:

```
struct __event1_s {
    void * __ev1_free;
    void * __ev1_malloc;
    void * __ev1_realloc;
    void * __ev1_calloc;
    void * __ev1_xp_free;
    void * __ev1_xp_malloc;
    void * __ev1_xp_realloc;
    void * __ev1_xp_calloc;
    unsigned int __ev1_le_xplink : 1,
                 __ev1_le_reserved : 31;
    unsigned int __ev1_vhm_xplink : 1,
                 __ev1_vhm_reserved : 31;
};
```

  The elements are as follows:

  __ev1_free **(output)**
  This field is set by the VHM to be the address of the free() replacement routine.

__ev1_malloc **(output)**
This field is set by the VHM to be the address of the malloc() replacement routine.

__ev1_realloc **(output)**
This field is set by the VHM to be the address of the realloc() replacement routine.

__ev1_calloc **(output)**
This field is set by the VHM to be the address of the calloc() replacement routine.

__ev1_xp_free **(output)**
This field is set by the VHM to be the address of the free() replacement routine for XPLINK support.

__ev1_xp_malloc **(output)**
This field is set by the VHM to be the address of the malloc() replacement routine for XPLINK support.

__ev1_xp_realloc **(output)**
This field is set by the VHM to be the address of the realloc() replacement routine for XPLINK support.

__ev1_xp_calloc **(output)**
This field is set by the VHM to be the address of the calloc() replacement routine for XPLINK support.

__ev1_le_xplink **(input)**
This bit is set when the application is running under XPLINK. It is expected that the VHM load the XPLINK version of its replacement routines, set their addresses in the above fields, and turn on the *__ev1_vhm_xplink* bit indicating support. If the *__ev1_vhm_xplink* bit is not turned on, then Language Environment will not use the VHM.

__ev1_vhm_xplink **(output)**
This bit is set by the VHM when it sees that the *__ev1_le_xplink* bit is set and it successfully loads the XPLINK versions of the replacement routines and sets their addresses into the above fields. If the *__ev1_le_xplink* bit is not set, then the VHM does not need to consider the XPLINK replacement routines.

- Termination event (_VHM_TERM): This event is driven during termination of the Language Environment enclave, after all application code has completed, but before the C library resources are terminated. There is no data area passed with this event. The purpose of this event is for the VHM to write, to stderr, any reports, as necessary, and then cleanup the user heap storage its has managed for the enclave.
- CEEDUMP event (_VHM_CEEDUMP): This event is driven when Language Environment has finished writing the CEEDUMP. There is no data area passed with this event. The purpose of this event is to allow the VHM to write out any formatted dump information it deems necessary.

XPLINK considerations

If the VHM intends to support XPLINK applications, then it must provide a second DLL containing the XPLINK versions of the replacement routines. During the initialization event, the VHM must load the XPLINK DLL when the __ev1_le_xplink bit is set. The addresses of the XPLINK replacement routines must be obtained from the XPLINK DLL and placed into the __event1_s structure.

Serialization

The VHM must be thread-safe. One way to detect a multi-threaded environment is to test the ceeedbmultithread bit; see page 59.

Nested enclaves

The VHM must be aware that it can be driven for initialization while already being active. This is possible in a nested enclave environment where the parent and child enclaves both specify that the VHM is to be used. Language Environment will drive the DLL load for each enclave, producing a unique writable static area.

Usage notes

The VHM should not use malloc(), free(), calloc() or realloc() from within the replacement services, to avoid potential recursive calls.

Activating the vendor heap manager

Users choose the option to use the vendor heap manager at run time. They do this by setting the environment variable.

Environment variable

_CEE_HEAP_MANAGER

This environment variable is set by the end-user or the application to indicate that the vendor heap manager (VHM) DLL will be used to manage the user heap.

This environment variable must be set using one of the following mechanisms:

- ENVAR run-time option
- inside the file specified by the _CEE_ENVFILE environment variable
- export _CEE_HEAP_MANAGER

Each of these locations is before any user code gets control, meaning prior to the HLL user exit, static constructors, and/or main() getting control. Setting of this environment variable, once the user code has begun execution, will not activate the VHM, but the value of the environment variable will be updated.

XPLINK DSA Extension Services

This section describes the services provided to extend an XPLINK downward-growing stack frame.

CEEVXPAL — XPLINK DSA extension

This CWI is invoked to extend an XPLINK downward-growing stack frame.

Input/Output	Register	Used for
Input Registers	R0	Not used
	R1	Storage size
	R2 - R3	Not used
	R4	Stack pointer
	R5	Not used
	R6	Entry point
	R7	Return address
	R8 - R11	Not used
	R12	CAA address

Input/Output	Register	Used for
	R13- R15	Not used
Output Registers	R0	Not preserved
	R1 - R2	Not preserved
	R3	Address of allocated storage
	R4	New stack pointer (saved R4, R6, R7 modified)
	R5 - R6	Not preserved
	R7 - R15	Unchanged

CEEVXPAL

Call this CWI interface as follows:

```
L       6,CEECAALEOV-CEECAA(,12)
L       6,260(,6)
BASR    7,6
DC      X'4700'
DC      Y(signed offset/8 to entry marker)
```

This CWI will return control to its invoker at the return address:

```
BR      7
```

This CWI will always;

- update R4 to point to new beginning of stack frame (maintaining quadword alignment),
- copy the register save area,
- adjust the backchain.

If allocating this storage causes a stack expansion, this CWI will also modify the saved R7 value (return address) in the stack frame so that when the routine that did the DSA extension returns it will give control to a glue routine which will fix the upward-growing stack fields in the CAA and SMCB.

Note: The argument area is never copied. The caller must never assume that something placed in the argument area is still there across a call to this CWI.

__alcaxp() — XPLINK DSA Extension (alloca)

This CWI is invoked by C/C++ compiler generated code to extend an XPLINK downward-growing stack frame. The linkage will be normal XPLINK conventions for call-by-name. It will appear like a function that takes an integer for input and returns void. It is used by the compiler to implement the compiler built-in function alloca().

Syntax

#include <edcwccwi.h>

void __alcaxp (int *storage_size*)

storage_size

the amount of additional stack storage being requested in bytes. This value will be rounded up to a multiple of 16 to ensure that the stack frame remains on a quadword boundary.

Usage Notes:

1. This CWI changes the value of the stack pointer (R4) and moves the register save area.
2. The argument area is never copied. The compiler must never assume that something placed in the argument area is still there across a call to this CWI.
3. The address of this CWI will be resolved like other C-RTL functions for XPLINK (via a side deck). There will NOT be a stub for non-XPLINK.
4. If there is not sufficient room in the current stack segment, this routine will pass control to the CEL CWI CEEVXPAL which will handle stack expansion.
5. It is the responsibility of the caller to calculate the address of the allocated storage. The allocated storage is located immediately following the argument area. The reason for this is that the compiler, which will know the size of the argument area, can generate more efficient code to perform the calculation.

XPLINK Compatibility Stack Swapping Services

This section describes the services provided to allow non-XPLINK and XPLINK routines to run on the correct upward- or downward-growing stack.

CEEVROND — Run on Downward-Growing Stack

This CWI is invoked from a non-XPLINK routine running on the upward-growing stack. It is used to invoke an XPLINK routine that runs on the downward-growing stack. It will perform stack swapping, move the parameter list, and load appropriate parameters into registers before invoking the routine. After the routine returns, it will adjust the return value and swap the stacks back.

This CWI will have two entry points, +0 for standard linkage and +16 for FASTLINK Linkage.

Input/Output	Register	Used for
Input Registers Standard Linkage	R0	Function descriptor
	R1	Parameter List
	R2 - R11	Not used
	R12	CAA address
	R13	Caller's DSA
	R14	Return address
	R15	Entry point (CEEVROND)
Output Registers Standard Linkage	R0	Extended return value
	R1 - R14	Unchanged
	R15	Return value
Input Registers FASTLINK Linkage	R0	Function descriptor
	R1 - R3	Parameters
	R4 - R11	Not used
	R12	CAA address
	R13	Caller's DSA
	R14	Return address

Input/Output	Register	Used for
	R15	Entry point (CEEVROND)
	NAB + BC	Parameter list
Output Registers FASTLINK Linkage	R0	Not preserved
	R1 - R3	Return value
	R4 - R14	Unchanged
	R15	Not preserved

CEEVROND

Call this CWI interface as follows:

```
L     15,CEECAACELV-CEECAA(,12)   Address of CAA in R12
L     15,3408(,15)
BALR  14,15
```

This CWI will return control to its invoker at the return address:

```
BR    14
```

Function descriptor

A 24 byte function descriptor that contains the environment and entry point for the XPLINK routine to be invoked at offset +16 ('10'x).

Parameter List

The parameter list for the routine to be invoked.

Note: CEEVROND has a stub called @@ROND.

CEEVRONU — Run on Upward-Growing Stack

This CWI is invoked from an XPLINK routine running on the downward-growing stack. It is used to invoke a non-XPLINK routine that runs on the upward-growing stack. It will perform stack swapping, move the parameter list, and store appropriate parameters from registers before invoking the routine. After the routine returns, it will adjust the return value and swap the stacks back.

Input/Output	Register	Used for
Input Registers	R0	Not used
	R1 - R3	Parameters
	R4	Caller's stack pointer
	R4 + 2112	Parameter list
	R5	Function descriptor
	R6	Entry point (CEEVRONU)
	R7	Return address
	R8 - R11	Not used
	R12	CAA address
	R13- R15	Not used
Output Registers	R0	Not preserved
	R1 - R3	Return value
	R4	Unchanged
	R5 - R6	Not preserved

Input/Output	Register	Used for
	R7 - R15	Unchanged

CEEVRONU

Call this CWI interface as follows:

```
L       6,CEECAALEOV-CEECAA(,12)
L       6,272(,6)
BASR    7,6
DC      X'4700'
DC      Y(signed offset/8 to entry marker)
```

This CWI will return control to its invoker at the return address:

```
BR      7
```

Function descriptor

A function descriptor that contains the entry point and writable static area address for the non-XPLINK routine to be invoked, or the actual function entry point.

Parameter List

The parameter list for the routine to be invoked.

Note: CEEVRONU has a stub called @@RONU.

CEEVH2OS — XPLINK to OS Linkage on Upward-Growing Stack

This CWI is invoked from an XPLINK routine running on the downward-growing stack. It is used to invoke an OS linkage routine that runs on the upward-growing stack. It will perform stack swapping, move the parameter list, and store appropriate parameters from registers before invoking the routine. After the routine returns, it will adjust the return value and swap the stacks back.

Input/Output	Register	Used for
Input Registers	R0	Not used
	R1 - R2	Must be zero
	R3	Entry point of OS linkage routine
	R4	Caller’s stack pointer
	R4 + 2124	OS style parameter list
	R5	Not used
	R6	Entry point (CEEVH2OS)
	R7	Return address
	R8 - R11	Not used
	R12	CAA address
	R13- R15	Not used
Output Registers	R0	Not preserved
	R1	Return value
	R2 - R3	Not preserved
	R4	Unchanged
	R5 - R6	Not preserved
	R7 - R15	Unchanged

CEEVH2OS

Call this CWI interface as follows:

```
L       6,CEECAACELV-CEECAA(,12)
L       6,3444(,6)
BASR    7,6
DC      X'4700'
DC      Y(signed offset/8 to entry marker)
```

This CWI will return control to its invoker at the return address:

```
BR      7
```

OS Style Parameter List

The parameter list for the routine to be invoked.

Note: CEEVH2OS has two stubs -- @@D2U@OS and @@D2U@C

__stack_info() - Stack segment ranges

The __stack_info() CWI will return the stack segment information for a given thread. The stack information returned is the beginning and ending address of each stack segment. The beginning and ending address of each stack segment will be adjusted to include only the stack frames on the active stack. If __stacktop, the address of the top of the stack, is not null, the last stack segment returned will be the one containing the stack frame pointed to by the __stacktop. Only information about the user stack is returned.

The caller of the _stack_info() CWI will provide the storage that Language Environment will use to return a structure containing information about the stack segments that comprise the user stack. If the storage provided is insufficient to contain all of the stack segment addresses, the CWI will fail and return information about the minimum number of bytes required to store the segment information.

If stack information is requested for a thread other than that of the caller, then the target thread must be quiesced, for example, not running, not in an MVS WAIT, or not stopped in non-LanguageEnvironment user/library code. Also, the output structure from pthread_quiesce_and_get_np() must be supplied as the second parameter to __stack_info().

Syntax

```
#define_OPEN_THREADS
#include  <edcwccwi.h>

int __stack_info (struct StackInfo *StackSegmentInfo, struct__thdq *thdq)
```

*struct StackInfo *StackSegmentInfo*

The storage for this StackInfo structure is provided by the caller of the CWI. When invoking this CWI the caller must supply the values of __structsize and __stacktop in the StackInfo structure. The StackInfo structure parameters are defined as follows:

__structsize

The total number of bytes of storage provided by the user for the StackInfo structure.

__numsegs
The total number of stack segments belonging to this thread that have been returned in this invocation of this CWI.

__stacktop
Zero or the address of the stack frame at which to end the search. If the __stacktop is zero, then the stack is scanned from the top to the bottom of the stack. If it is non-zero, the stack is scanned from the specified stack frame until the bottom is reached.

__startaddr
This address is the beginning, the numerically-lowest bound address, of the stack segment. For an upward-growing stack, this is the address of the beginning of the segment and for a downward-growing stack, this will be the last byte used within the segment.

__endaddr
This address is the end, the numerically-highest bound address, of the stack segment. For an upward-growing stack, this is the last byte used within the segment and for a downward-growing stack, this will be the address of the end of the stack segment.

__segtype
This indicates whether the stack is upward-growing or downward-growing. The allowed values are:

- __EDCWCCWI_UP for a upward-growing stack
- __EDCWCCWI_DOWN for a downward-growing stack

If Language Environment cannot determine the top of the stack, then the __endaddr field will simply contain the end address of the last segment. When a thread has more than one stack, the stack segment information will be returned for both the downward-growing stack and the upward-growing stack. It will begin with the initial stack segment, which contains the first, that is, the oldest, stack frame allocated, and end with the stack segment containing the most recent stack frame (or the segment containing the stack frame pointed to by __stacktop).

*struct__thdq *thdq*
Null when the invoker is requesting the information on its own thread or points to a variable that contains the address of the __thdq_ structure obtained from the pthread_quiesce_and_get_np().

Returned Value

If successful, __stack_info() returns zero.

If unsuccessful, __stack_info() returns:

- - 1 for the case when errno is set to EINVAL or EMVSERR
- a number greater than zero for the case when errno is set to ENOMEM

EINVAL
This error indicates that either an invalid thread ID or __stacktop has been supplied by the user.

EMVSERR
This error indicates that an MVS internal error has occurred.

ENOMEM
This error indicates that the storage provided by the user to store the stack

segment information is not large enough to hold the information. In this case, __stack_info() returns the minimum number of bytes required to hold all the information.

Chapter 5. Condition Representation

This chapter describes the format and use of condition representation within Language Environment.

Objectives

Conditions can be defined in a number of ways. Some examples are hardware- or software-detected events (which might or might not be critical for the application to run properly), asynchronous events, or the completion of a unit of work (successfully or unsuccessfully).

Systems communicate information about conditions in a variety of ways. Return and condition codes are examples of condition information. Also, common usage is almost nonexistent in representing or communicating these conditions across IBM products or platforms. Therefore, Language Environment is required to define a consistent data type to represent conditions and communicate information about them to enable ILC and cross-system source code portability of applications.

The methodology presented here is required for the representation and communication of condition-related information:

- As a feedback code (return information) from all Language Environment callable services
- As input to the Language Environment condition manager
- As input to the Language Environment message services

The Model

A condition in Language Environment is communicated with a 12-byte (96-bit) condition token data type. The return information (feedback code) from a Language Environment callable service is an instance of this data type.

The advantages of the condition token data type include:

- A condition handler can be established to process return information from called services, thus freeing the programmer from coding **invoke then check** calls. Instead, a centralized location handles return information.
- The shared data type ties together the Language Environment callable services, condition management, and message services components of Language Environment.
- A message that can be displayed or logged in a file is associated with each instance of a condition.
- As a feedback code, the data type can be stored or logged for later processing (if the message associated with the feedback code has inserts, the message must be obtained before it is saved).
- Symbolic names can be equated to defined feedback codes and hardware conditions for those languages which support symbolic names.

The format of the condition token data type allows four different cases, or types, of conditions to be represented. Two of the four types are **cross-system consistent**. The other two are reserved for future expansion or describe platform-specific conditions.

© Copyright IBM Corp. 1991, 2002

Condition Representation

All Language Environment callable services use this condition token data type to return information as a feedback code.

The condition token data is input to Language Environment condition management to reduce the amount of overhead and the lack of completeness associated with the traditional call method of **invoke then check**. The input method has the following characteristics:

- The caller has the option of passing an address parameter for a feedback code on the call statement to the service.
- A feedback code is returned to the caller if the address parameter is supplied and the result of the service is not critical.
- Critical conditions (severity = 4) are always signaled to the Language Environment condition manager.
- The called service signals the condition manager passing the condition token if the parameter is not supplied and the result of the called service is not totally successful.
- The service returns if the parameter is not supplied and the result of the called service is completely successful.

Note: Language Environment-enabled languages must allow optional parameters on their call statements to use the optional parameter method. In the case where a language does not allow optional parameters, the feedback code parameter is always coded by the caller. Optional parameters are supported by passing a zero by value in the parameter address list. When the optional parameter is the last parameter in the parameter address list, Language Environment tolerates the high order bit being on.

Data Objects

Language Environment condition representation data objects are defined in this section.

Condition Token Data Type (CEECTOK)

The CEECTOK communicates with message services, condition management, Language Environment callable services, and user applications. An instance can be built dynamically by the callable service CEENCOD or, more typically, constructed statically. An instance of a condition token is 12 bytes (96 bits) long, as shown in Figure 61 on page 219. For layout details of the CEECTOK, see Figure 62 on page 222.

```
CEECTOK       DSECT
CONDITION_ID  DS   0F
*
*   Case 1 definitions for CONDITION_ID
*
SEVERITY      DS   H         Condition severity (0-4)
MSG_NUMBER    DS   H         Related message number
*
*   Case 2 definitions for CONDITION_ID
*
              ORG  CONDITION_ID
CLASS_CODE    DS   H         Message associated with the class
CAUSE_CODE    DS   H         Message associated with the cause
*
*   Common part of the feedback code
*
FLAGS         DS   X         Bits for Case/Severity/Control
*
*   Case definitions
*                  B'xx......'
CASE1         EQU  B'01000000'
CASE2         EQU  B'10000000'
*
* Severity definitions
*                  B'..xxx...'
SEV0          EQU  B'00000000'    Severity 0 condition
SEV1          EQU  B'00001000'    Severity 1 condition
SEV2          EQU  B'00010000'    Severity 2 condition
SEV3          EQU  B'00011000'    Severity 3 condition
SEV4          EQU  B'00100000'    Severity 4 condition
*
* Control definitions
*                  B'.....xxx'
IBM_ASSIGN    EQU  B'00000001'    IBM assigned the facility id
CTL_RSVD1     EQU  B'00000010'    Reserved - must be 0
CTL_RSVD2     EQU  B'00000100'    Reserved - must be 0
*
*   Facility ID
*
FACILITY_ID   DS   CL3            3 char string that ids the product
*
*   Instance Specific Information Token
*
I_S_Info      DS   F              Token to the ISI
```

Figure 61. Condition Token

CONDITION_ID

A 4-byte identifier that describes the condition with the FACILITY_ID. The case field determines the type of identifier. Two identifiers are defined to be CSC:

1. Case 1 - Service Condition

   Case 1 is used by all Language Environment callable services and most application programs.

Case 1 Condition_ID

```
struct Condition_ID {
                      INT2 Severity;
                      INT2 Msg_No;
                    };
```

Severity

A 2-byte binary integer with the following possible values:

0 Information only (or, if the entire token is zero, no information).

1 Warning — service completed, probably correctly.

2 Error detected — correction attempted; service completed, perhaps incorrectly.

3 Severe error — service not completed.

4 Critical error — service not completed; condition signaled.

Although the field is obviously capable of containing other values, these are not architected. If a critical error (severity = 4) occurs during a Language Environment callable service, it is always signaled to the condition manager, rather than returned synchronously to the caller.

Msg_No

A 2-byte binary number that identifies the message associated with the condition.

The combination of Facility_ID and Msg_No uniquely identifies a condition.

2. Case 2 - Class/Cause Code Condition

   Case 2 is used by some operating systems and compiler run-time libraries.

Case 2 Condition_ID

```
struct Condition_ID {
                      INT2 Class_Code;
                      INT2 Cause_Code;
                    };
```

Class_Code

A 2-byte, binary number that identifies the message subid associated with the **class** of the condition.

Cause_Code

A 2-byte, binary number that identifies the message ID associated with the **cause** of the condition.

Note: The message subid and the message identifier are tags found in the message source file.

Facility_ID

A 3-character, alphanumeric string that identifies a product or component within a product.

Note: Special characters, including space, cannot be used.

The Facility_ID is associated with the repository (for example, a file) of the run-time messages. The conventions for naming the message repository, however, are platform-specific. The Facility_ID need not be unique within the system and can be determined by the application writer. If a unique ID is required (for IBM and non-IBM products), an ID can be obtained by contacting an IBM project office.

A Facility_ID assigned by IBM to an IBM product must begin with one of the letters A through I, inclusive. A Facility_ID assigned by IBM to a product other than an IBM's must not begin with a letter A through I. For information on how to indicate if the Facility_ID has been assigned by IBM, see Control below. There are no constraints (other than the alphanumeric requirement) on a Facility_ID not assigned by IBM.

Language Environment constructs a load name consisting of the form **T || Facility_ID || MSGT**:

T The character 'I' if the Facility_ID was assigned by IBM, or the character 'U' if the Facility_ID was **not** assigned by IBM.

Facility_ID
The three character facility ID as described above.

MSGT The four characters MSGT.

For example, given an IBM assigned facility ID of CEE, the constructed load name would be ICEEMSGT.

Note: The Msg_No/Facility_ID identifies a condition for a Language Environment-enabled product. This identification is required to be persistent beyond the scope of a single session. This allows the meaning of the condition and its associated message to be determined after the session that produced the condition has ended. The message inserts and the I_S_Info need to be explicitly saved to allow persistence after the session has concluded.

Case A 2-bit field that defines the format of the Condition_ID portion of the token. The value 1 identifies a case 1 condition, the value 2 identifies a case 2 condition. The values 0 and 3 are reserved.

Severity
A 3-bit field indicating a condition's severity. Severity values are the same as defined under a case 1 Condition_ID. When evaluating the severity, the same rules apply for signaling case 2 conditions as for case 1 conditions.

Note: This field is valid for both case 1 and 2 conditions. It can be used with either condition token to evaluate the condition's severity.

For a case 1 condition, this field contains the same value as the Severity field in the Condition_ID.

Control
A 3-bit field containing flags describing or controlling various aspects of condition handling, as follows:

..1 Indicates Facility_ID has been assigned by IBM.

.1. Reserved.

1.. Reserved.

ISI A fullword field containing a token that identifies the Instance Specific Information (ISI) associated with the given condition. If an ISI is not associated with a given condition token, the ISI field contains binary zero. The ISI token provides access to various instance specific information such as message inserts and qualifying data.

Condition Representation

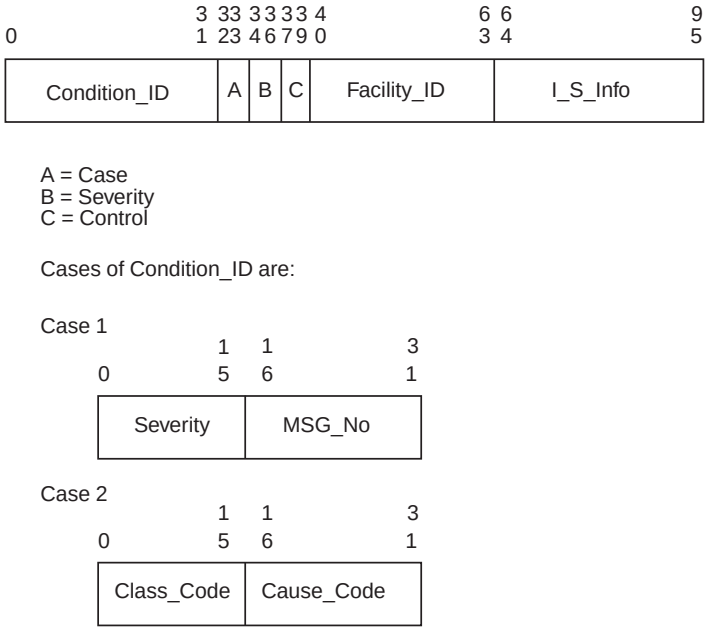

Figure 62. Language Environment Condition Token (CEECTOK)

Feedback Code

A feedback code is an instance of a condition token (CEECTOK). A feedback code is returned from a Language Environment service call if the caller has passed a reference to an area to hold it. To test a feedback code for equivalence, the first 8 bytes should be compared because they are static. The last four bytes can change from instance to instance.

Compiler-Writer Interfaces

Language Environment provides an S/370-specific CWI that constructs a condition token given a facility ID and a message number. The name of the service is CEEGETFB.

CEEGETFB — Construct a Condition Token Given a Facility ID and a Message Number

CEEGETFB constructs a case 1 condition token given a facility identifier and a message number. The severity is retrieved from the appropriate message file containing the message number.

Syntax

void CEEGETFB (*facility_id, message_no, cond_token, [fc]*)

```
CHAR3     *facility_id;
INT4      *message_no;
CEECTOK   *cond_token;
FEED_BACK *fc;
```

CEEGETFB

Call this CWI interface as follows:

```
L     R12,A(CAA)            Get the address of CAA in R12
L     R15,CEECAACELV-CEECAA(,R12)
L     R15,2816(,R15)
BALR  R14,R15
```

facility_id **(input)**
The 3-character facility identifier that is placed into the resulting condition token. It is used to determine the file containing the message definition and message text.

message_no **(input)**
A 4-byte binary integer representing the message number for the resulting condition token.

cond_token **(output)**
A case 1 style 12-byte condition token (CEECTOK) that is constructed from *facility_id*, *message_no*, and the severity, which is obtained from the appropriate file containing the message definition. The I_S_Info field is set to binary zero.

fc **(output/optional)**
A 12-byte feedback code passed by reference. If specified as an argument, feedback information (condition token) is returned to the calling routine. If not specified as an argument and the requested operation was not successfully completed, the condition is signaled to the condition manager.

The following symbolic conditions can result from this service:

CEE000	Severity	0
	Msg_No	N/A
	Message	The service completed successfully.
CEE0CJ	Severity	3
	Msg_No	0403
	Message	Invalid severity code found.
CEE0EA	Severity	3
	Msg_No	0458
	Message	The message repository cannot be located.
CEE3CT	Severity	3
	Msg_No	3485
	Message	*message_no* was not found within the library specified.

Chapter 6. National Language Support and Message Handler

This chapter describes Language Environment National Language Support (NLS) and message handling services.

National Language Support

The Language Environment message handler provides services to support many NLS machine readable information (MRI) requirements, such as: message formatting, message delivery, casing, folding, and normalization. The message facility formats messages for any national language known to Language Environment. Language Environment provides run-time messages for the following national languages:

- **ENU** (Mixed-case English USA)
  - Message text is made up of SBCS characters and consists of both uppercase and lowercase letters.
  - Message inserts can contain DBCS characters.
  - Long messages are split at an SBCS blank if possible or split by the output line length if a blank separator does not exist.
- **UEN** (Uppercase American English)

  This is identical to the mixed-case American English language except the message text consists of uppercase letters. Message inserts can be in lowercase or might use lowercase codepoints to make use of SBCS Katakana capabilities.
- **JPN** (Japanese)

  This language supports devices that have both DBCS and SBCS capabilities; its characteristics are:
  - Message text can be made interchangeably of SBCS and DBCS characters.
  - If a long message extends beyond the print line and the text is SBCS, it is split at a blank when possible. If a blank separator does not exist, text is split by the output line length. If the text is DBCS, the message is split at a DBCS blank if possible. If a blank separator does not exist, it is split at the last DBCS character that allows a shift-in to be inserted. The next line begins with a shift-out character.

The national language can be set using the NATLANG run-time option or the CEE3LNG callable service. One current language is maintained at the enclave level and remains in effect until it is changed. For example, if JPN is specified in the NATLANG run-time option but ENU is later specified by the CEE3LNG callable service, ENU is considered the current national language. If the message text is not available for the current national language setting, the installation default is used instead.

The current value of the COUNTRY run-time option controls the following values:
- Date format
- Time format
- Currency symbol
- Decimal separator character
- Thousands separator

© Copyright IBM Corp. 1991, 2002

The value can be set either by the COUNTRY run-time option or by the CEE3CTY callable service. The IBM-supplied default COUNTRY(US) indicates the default country is USA. The COUNTRY run-time option default can be changed during the installation of Language Environment.

Introduction to Language Environment Message Services

Language Environment provides message handling services to format and deliver run-time messages. The following items are described in this section:

- The format of the message source files
- How to create a loadable message library
- How to establish inserts for messages
- How to format a message
- How to deliver the message to a given destination

The Language Environment message services can be divided into two categories:

- Cross System Consistent (CSC) interfaces
- Compatibility interfaces

The CSC interfaces are callable services. The CSC-callable services supported in Language Environment are:

CEEMOUT
: Dispatches a message string to the platform's defined output device.

CEEMSG
: Given a condition token, this service gets, formats, and dispatches a message string to the defined output device.

CEEMGET
: Gets, formats, and stores a formatted message in a buffer.

The CSC-CWI interface supported in Language Environment is:

CEECMIB
: Populates a feedback token with an ISI.

The compatibility interfaces provided are listed below. The services are provided to manipulate the insert area and to dispatch a message.

CEEXMGET
: Obtain an insert block.

CEEXMDFL
: Populate all inserts with a default.

CEEXMFRE
: Release an insert area.

CEEXMINS
: Place an insert into the insert area.

CEEXMFMT
: Format a message into a user specified buffer.

CEEXMOUT
: Dispatch a message to a specified destination.

CEEMFNDM
: Given a feedback token, return the pointer to the ISI.

MSGFILE — Related CWIs

Language Environment provides some message services that aid the HLLs in mapping their message files to Language Environment's MSGFILE.

CEECLOS — Close ddname

The CEECLOS CWI closes the specified ddname.

Syntax

void CEECLOS (*ddname, [fc]*)

```
CHAR8     *ddname;
FEED_BACK *fc;
```

CEECLOS

Call this CWI interface as follows:

```
L     R15,CEECAACELV-CEECAA(,R12)   Address of CAA in R12
L     R15,2924(,R15)
BALR  R14,R15
```

ddname **(input)**

An 8-character fixed-length string, left-justified and right-padded, containing the ddname that should be closed. If Language Environment owns the related DCB, Language Environment closes the file. If the ddname is blank, then the current MSGFILE ddname is used.

fc **(output/optional)**

The feedback code passed by reference. The following conditions can result from this service:

CEE000	Severity	0
	Msg_No	N/A
	Message	The service completed successfully.
CEE3C5	Severity	1
	Msg_No	3484
	Message	The file was not currently open.
CEE3D5	Severity	3
	Msg_No	3493
	Message	Language Environment did not own the specified ddname's DCB.
CEE3D6	Severity	3
	Msg_No	3494
	Message	Uncorrectable I/O error encountered while closing the file.

CEEODMF — Open an Input ddname

The CEEODMF CWI opens an input ddname.

Syntax

void CEEODMF (*ddname,[fc]*)

```
CHAR8     *ddname;
FEED_BACK *fc;
```

CEEODMF

Call this CWI interface as follows:

```
L     R15,CEECAACELV-CEECAA(,R12)   Address of CAA in R12
L     R15,3988(,R15)
BALR  R14,R15
```

ddname **(input)**
An 8-character fixed-length string, left-justified and right-padded, containing the ddname to be opened.

fc **(output/optional)**
The feedback code passed by reference. The following conditions can result from this service:

CEE000	Severity	0
	Msg_No	N/A
	Message	The service completed successfully.
CEE3DA	Severity	1
	Msg_No	3498
	Message	The MSGFILE was already open.
CEE3DB	Severity	3
	Msg_No	3499
	Message	The MSGFILE could not be opened.

CEEOPMF — Open the MSGFILE ddname

The CEEOPMF CWI opens the current MSGFILE ddname.

Syntax

void CEEOPMF (*[fc]*)

```
FEED_BACK *fc;
```

CEEOPMF
Call this CWI interface as follows:

```
L     R15,CEECAACELV-CEECAA(,R12)   Address of CAA in R12
L     R15,2984(,R15)
BALR  R14,R15
```

fc **(output/optional)**
The feedback code passed by reference. The following conditions can result from this service:

CEE000	Severity	0
	Msg_No	N/A
	Message	The service completed successfully.
CEE3DA	Severity	1
	Msg_No	3498
	Message	The MSGFILE was already open.
CEE3DB	Severity	3
	Msg_No	3499
	Message	The MSGFILE was unable to be opened.

CEEQDMF — Query an Input ddname

This CWI returns the status of the file, the effective LRECL if the file is open, and the file descriptor, if the file is in the POSIX file system, for an input ddname.

Syntax

void CEEQDMF (*ddname, status, elrecl, fdesc, [fc]*)

```
CHAR8     *ddname;
INT4      *status;
INT4      *elrecl;
INT4      *fdesc;
FEED_BACK *fc;
```

CEEQDMF

Call this CWI interface as follows:

```
L     R15,CEECAACELV-CEECAA(,R12)   Address of CAA in R12
L     R15,3984(,R15)
BALR  R14,R15
```

ddname **(input)**

An 8-character fixed-length string, left-justified and right-padded, containing the ddname to be queried.

status **(output)**

A fixed-binary(31) integer that contains one of the following values:

1 The message file was already open.

0 The message file was not open.

elrecl **(output)**

A fixed-binary(31) integer that contains the effective length of the record, thus providing the number of bytes available for character data. If the file is not open, the *elrecl* is set to zero.

fdesc **(output)**

A fixed-binary(31) integer that contains the file descriptor of the Language Environment message file if it is in the POSIX file system; otherwise this field contains a value of -1.

fc **(output/optional)**

The feedback code passed by reference. The following condition can result from this service:

CEE000	Severity	0
	Msg_No	N/A
	Message	The service completed successfully.

CEEQUMF — Query the MSGFILE ddname

This CWI returns the current MSGFILE ddname, status of the file, the effective LRECL if the file is open, and the file descriptor if the file is in the POSIX file system.

Syntax

void CEEQUMF (*ddname, status, elrecl, fdesc, [fc]*)

```
CHAR8     *ddname;
INT4      *status;
INT4      *elrecl;
INT4      *fdesc;
FEED_BACK *fc;
```

CEEQUMF

Call this CWI interface as follows:

```
L     R15,CEECAACELV-CEECAA(,R12)   Address of CAA in R12
L     R15,2928(,R15)
BALR  R14,R15
```

ddname **(output)**

An 8-character fixed-length string, left-justified and right-padded, containing the current MSGFILE ddname.

status **(output)**

A fixed-binary(31) integer that contains one of the following values:

1 The message file was already open.

0 The message file was not open.

elrecl **(output)**

A fixed-binary(31) integer that contains the effective length of the record. Thus providing the number of bytes available for character data. If the file is not open, the *elrecl* is set to zero.

fdesc **(output)**

A fixed-binary(31) integer that contains the file descriptor of the Language Environment message file if it is in the POSIX file system, otherwise this field contains a value of -1.

fc **(output/optional)**

The feedback code passed by reference. The following condition can result from this service:

CEE000	Severity	0
	Msg_No	N/A
	Message	The service completed successfully.

CEECHMF — Change the MSGFILE ddname

The CEECHMF CWI allows the specified ddname to become the new MSGFILE ddname.

Syntax

void CEECHMF (*ddname, [fc]*)

```
CHAR8        *ddname;
FEED_BACK    *fc;
```

CEECHMF

Call this CWI interface as follows:

```
L     R15,CEECAACELV-CEECAA(,R12)   Address of CAA in R12
L     R15,2932(,R15)
BALR  R14,R15
```

ddname **(input)**
An 8-character fixed-length string, left-justified and right-padded, containing the ddname that becomes the new MSGFILE ddname.

fc **(output/optional)**
The feedback code passed by reference. The following conditions can result from this service:

CEE000	Severity	0
	Msg_No	N/A
	Message	The service completed successfully.

Usage Notes:

1. The OCB is not updated by this service.
2. The ddname is not validated by this service.
3. The ddname is not opened at this time. It is opened at the first request to write to the ddname.
4. When the Message File ddname is changed using this service, it does not inherit the ENQ/NOENQ characteristic of the ddname specified on the MSGFILE run-time option.

Relationship Between Date/Time and COUNTRY Settings

Some date/time callable services allow the specification of a blank or null picture string. This directs Language Environment to use the current country value to obtain the default picture string for the date or time.

The names of the months and days of the week are obtained based upon the current national language value. Strictly speaking, it is obtained from the national language message's file, as selected by the NATLANG run-time option. The message numbers assigned to the days of the week and the months are:

```
CEE0001 - JANUARY         CEE0021 - january
CEE0002 - FEBRUARY        CEE0022 - february
CEE0003 - MARCH           CEE0023 - march
CEE0004 - APRIL           CEE0024 - april
CEE0005 - MAY             CEE0025 - may
CEE0006 - JUNE            CEE0026 - june
CEE0007 - JULY            CEE0027 - july
CEE0008 - AUGUST          CEE0028 - august
CEE0009 - SEPTEMBER       CEE0029 - september
CEE0010 - OCTOBER         CEE0030 - october
CEE0011 - NOVEMBER        CEE0031 - november
CEE0012 - DECEMBER        CEE0032 - december

CEE0013 - SUNDAY          CEE0033 - sunday
CEE0014 - MONDAY          CEE0034 - monday
CEE0015 - TUESDAY         CEE0035 - tuesday
CEE0016 - WEDNESDAY       CEE0036 - wednesday
CEE0017 - THURSDAY        CEE0037 - thursday
CEE0018 - FRIDAY          CEE0038 - friday
CEE0019 - SATURDAY        CEE0039 - saturday
```

Message Handling Services

This section describes the message handling CWIs CEECMIB and CEEMFNDM.

CEECMIB — Create a Message Insert Area Entry

The CEECMIB CWI provides a mechanism by which an MIB can be populated; an MIB is managed by Language Environment. The number of ISIs per thread is determined by the MSGQ(x) run-time option.

Syntax

void CEECMIB (*cond_rep, Insert_Seq_Num, Insert_Data, [fc]*)

```
FEED_BACK *cond_rep;
INT4      *Insert_Seq_Num;
VSTRING   *Insert_Data;
FEED_BACK *fc;
```

CEECMIB

Call this CWI interface as follows:

```
L     R15,CEECAACELV-CEECAA(,R12)   Address of CAA in R12
L     R15,2748(,R15)
BALR  R14,R15
```

cond_rep **(input)**

A condition token defining the condition for which the Q_Data_Token is to be retrieved.

Insert_Seq_Num **(input)**

A 4-byte integer containing the insert sequence number (for example, insert 1, insert 2). It corresponds to that specified with the **ins** tag in the message source file.

Insert_Data **(input)**

The insert data. The data type is a halfword-prefixed fixed-length string. The entire length that is described in the halfword prefix is used without truncation. DBCS needs to be enclosed within SO/SI.

fc **(output/optional)**

A condition token which can return the following conditions:

CEE000	Severity	0
	Msg_No	0000
	Message	The service completed successfully.
CEE0EB	Severity	3
	Msg_No	0459
	Message	An invalid MIB Sequence number was found.
CEE0H9	Severity	3
	Msg_No	0553
	Message	An invalid *insert_seq_num* was found.

Usage Note: MIBs are released when CEEMSG issues the message, or when the MSGQ(n) run-time option is exceeded. The least recently used MIB is overwritten.

CEEMFNDM — Return the MIB Address

The CEEMFNDM CWI returns the MIB address given a feedback token.

Syntax

void CEEMFNDM (*FB_token, MIB_Addr, [fc]*)

```
FEEB_BACK *FB_token;
POINTER   *MIB_Addr;
FEED_BACK *fc;
```

CEEMFNDM

Call this CWI interface as follows:

```
L     R15,CEECAACELV-CEECAA(,R12)   Address of CAA in R12
L     R15,2868(,R15)
BALR  R14,R15
```

FB_token **(input)**

The 12-byte feedback token returned from a callable service.

MIB_Addr **(output)**

The address of the MIB for this condition.

fc **(output/optional)**

A 12-byte feedback code passed by reference. Feedback information (condition token) is returned to the calling routine. The following conditions can result from this service:

CEE000	Severity	0
	Msg_No	N/A
	Message	The service completed successfully.
CEE3D8	Severity	1
	Msg_No	3496
	Message	The MIB was not found.

Usage Note: Once the MIB is obtained, message inserts can also be located. The procedure for finding the message insert information is described below. Figure 63 on page 234 represents the access to message insert information.

1. Offset x'0' into the MIB is an EBCDIC eyecatcher ″CMIB″.
2. Offset x'24' into the MIB points to an array of 9 pointers of message insert data. If the pointer is 0, this insert is not used. If a pointer is non-zero, this points to the message insert data in EBCDIC.
3. Offset x'20' into the MIB points to an array of 9 quadwords of message insert information. The fourth word (the last word) contains the length of the message insert data.

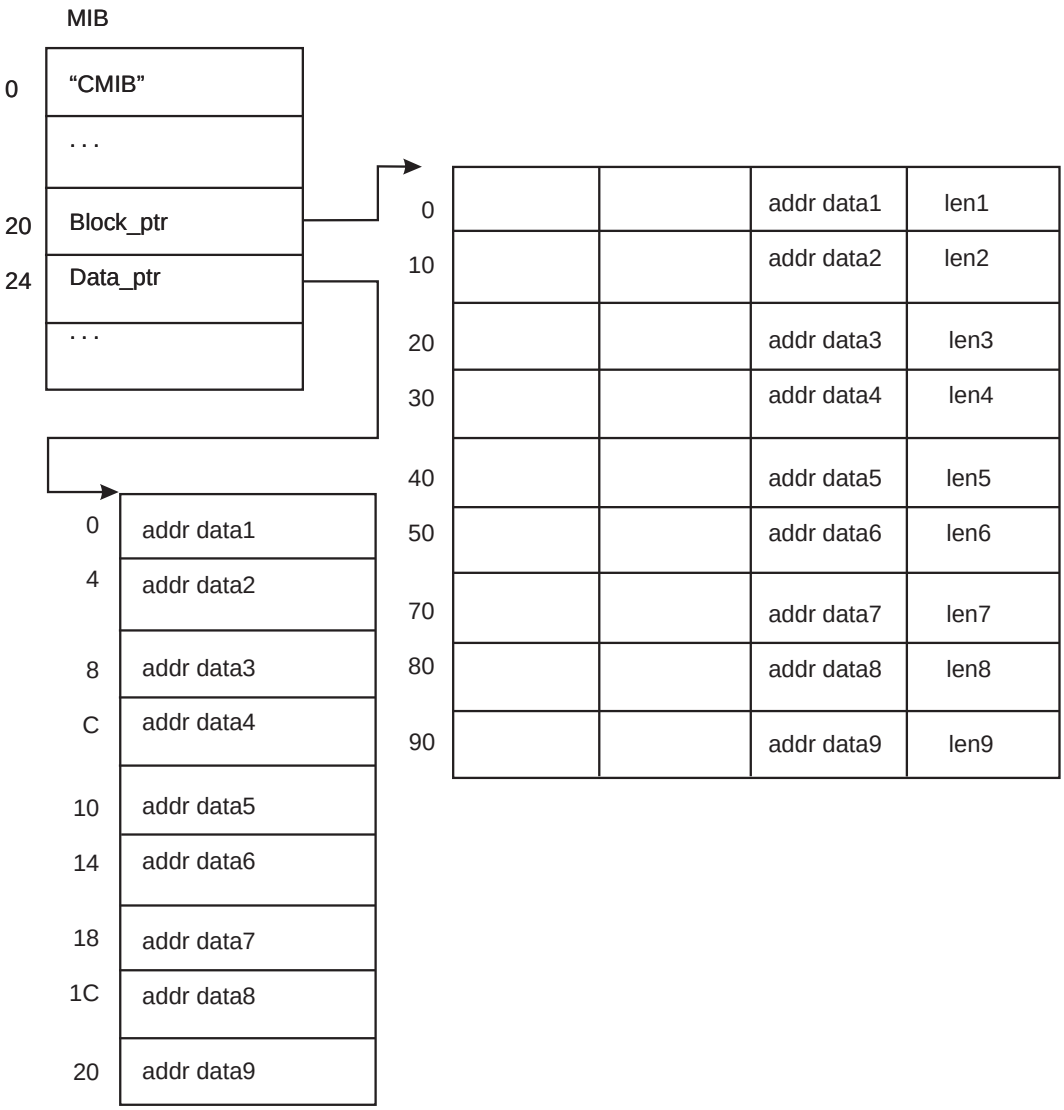

Figure 63. Access to Message Insert Information

CEE3SMO — Suppress Printing of Messages

CEE3SMO is a callable service that suppresses the printing of any message, traceback, and dump (as indicated by the TERMTHDACT option) for any condition that has been signaled and allowed to percolate. This service must be called by a user condition handler.

Syntax

void CEE3SMO (*[fc]*);

```
FEED_BACK *fc;
```

fc **(output/optional)**

A 12-byte feedback code passed by reference. Feedback information (condition token) is returned to the calling routine. The following conditions can result from this service:

CEE000	Severity	0
	Msg_No	N/A
	Message	The service completed successfully.
CEE3B0	Severity	3
	Msg_No	3424
	Message	CEE3SMO called from outside a condition handler. This condition is signaled when there is only one CIBH in the CIBH chain and it is not in use.

C/C++-Specific Vendor Interfaces

This section describes the C/C++-specific vendor interfaces.

__cttbl() — Returns address of _LC_ctype_t structure

Header Section

_LC_info.h: The _LC_info.h header file contains definitions for the __cttbl() function.

Standards

Standards/Extensions	C or C++	Dependencies
Language Environment	both	None

Format

```
#include <localdef.h>
#include <_LC_info.h>

_LC_ctype_t * __cttbl(void);
```

General Description

This function provides the location of the CTYPE class which defines character membership in a character class.

Returned Value

__cttbl() returns a pointer of type _LC_ctype_t which is defined in <localdef.h>.

ASCII/EBCDIC Mixed Mode Support for Enhanced ASCII C-RTL

Overview

ASCII/EBCDIC bimodal support for enhanced ASCII facilitates the development of bimodal C++ libraries and DLLs. Bimodal class libraries and DLLs eliminate the need for the development, maintenance and distribution of separate ASCII and EBCDIC class libraries.

The end user application is not bimodal. Users of C++ class libraries or DLLs need to use either the ASCII/EBCDIC bimodal version of the library or the ASCII or EBCDIC version of the library which matches the mode of their application.

It is the responsibility of the user to ensure that the character mode of data passed as arguments to, or values returned from, function calls are in the correct character mode for the functions being used. The C-RTL does not convert arguments or return values.

Header information

Enhanced ASCII support requires that all headers required by all Enhanced ASCII functions used in an application be included. Enhanced ASCII support uses headers to dynamically map generic function calls such as printf() to either an ASCII version of printf() or an EBCDIC version of printf() based on how the application was compiled. Additionally, the headers dynamically map explicit ASCII or EBCDIC function calls such as __printf_a() or __printf_e() to ASCII or EBCDIC versions of printf() respectively. For example, the snippet of code in stdio.h regarding the printf() function is as follows:

```
#ifdef __AE_BIMODAL_F
   #pragma map (__printf_a,   "\174\174A00118")
   #pragma map (__printf_e,   "PRINTF")
   __new4102(int,__printf_a,(const char *, ...));
   __new4102(int,__printf_e,(const char *, ...));
#endif /* __AE_BIMODAL_F */

#ifdef __NATIVE_ASCII_F
   #pragma map (printf,    "\174\174A00118")
#endif /* __NATIVE_ASCII_F */

#ifdef _NO_PROTO
   int      printf ();
#else
   int      printf (const char *, ...);
#endif /* _NO_PROTO */
```

The __AE_BIMODAL_F feature test is for ASCII/EBCDIC Bimodal support. The __AE_BIMODAL_F feature is defined in features.h if the application was compiled using the z/OS V1R2 C/C++ Compiler, the user compiled their code using the XPLINK compile option and _AE_BIMODAL was defined. If the __AE_BIMODAL_F feature test is satisfied, the explicit printf() function calls, __printf_a() and __printf_e() get pragma mapped to the ASCII and EBCDIC versions of printf() respectively. In addition, the prototypes for __printf_a() and __printf_e() are exposed. Similar header logic is also used for ASCII/EBCDIC Mixed Mode versions of macros and structures.

Usage example

The design point for ASCII/EBCDIC Mixed Mode support for Enhanced ASCII was to make it possible for C++ class library and DLL developers to develop a common mixed mode version of their library instead of producing separate ASCII and EBCDIC versions. The class library or DLL developer can accomplish this by calling explicit ASCII and EBCDIC versions of C-RTL functions based on the results of a call to __isASCII(). __isASCII() is used to determine the character mode of the user application. It is assumed that the end user application is not bimodal. A simple ASCII/EBCDIC bimodal ″Hello World!″ program will be used to illustrate how a bimodal class library or DLL can be produced. For this example, it is assumed that the user application (the code containing main()) is compiled ASCII while the bimodal code, which is contained in a separate compile unit, is compiled EBCDIC.

ASCII/EBCDIC Bimodal ″Hello World!″ program:

```
#include <stdio.h>
void printItOut(const char *, const char *);

void main(void) {
   printItOut("%s\n", "Hello World!");
}
```

Assuming the above code was compiled using the ASCII compile option, the following will occur: the C/C++ Compiler will generate values for the characters in the format string and the ″Hello World!\n″ string in the ISO8859-1 code page. A separate compile unit contains the bimodal printItOut() function.

A separate compile unit contains the bimodal printItOut() function.

```
#define _AE_BIMODAL 1
     #include <stdio.h>
     #include <_Nascii.h>

     void printItOut(const char *format, const char *string {
        if (__isASCII())
           __printf_a(format, string);
        else
           __printf_e(format, string);
     }
```

In the example, the format and string arguments passed on the call to printItOut will be in the ISO8859-1 code page. __isASCII() returns the character mode of the current thread. In this example, the character mode of the initial processing thread is ASCII. This was set during C-RTL initialization since the compile unit containing main() was compiled ASCII.

Since __isASCII() returns the value one, __printf_a() is called, passing along the *format* and *string* arguments. The *format* and *string* arguments are encoded using ISO8859-1. Since the code in our ASCII/EBCDIC Bimodal part was compiled XPLINK and _AE_BIMODAL is defined, the __printf_a() function call is pragma mapped by stdio.h to be \174\174A00118, which is the Enhanced ASCII version of the printf() function. Hello World! in ISO8859-1 will be sent to stdout. By default, stdout is assumed EBCDIC and the Hello World! string will show up on stdout as unreadable characters. The Hello World! string will show up legibly on stdout if the application is being run with auto conversion on or the output of the ″Hello World!″ program is piped into iconv as follows:

```
hellow 2 >&1 | iconv -f ISO8859-1 -t IBM-1047
```

ASCII/EBCDIC Mixed Mode Support Funtions added to the C-RTL

- __ae_thread_setmode()
- __ae_thread_swapmode()
- __isASCII()

__ae_thread_setmode() — Set Character Mode: ASCII or EBCDIC

Standards

Standards/Extensions	C or C++	Dependencies
Language Environment	both	z/OS V1R2

Format

```
#include <ctype.h>

void __ae_thread_setmode(int aemode);
```

General Description

The __ae_thread_setmode() function sets the current thread's character mode to ASCII or EBCDIC based on the value of the argument *aemode*:

- _AE_ASCII_MODE - set thread character mode to ASCII
- _AE_EBCDIC_MODE - set thread character mode to EBCDIC

If the value for *aemode* is other than the values shown above, the thread's ASCII/EBCDIC mode will remain unchanged.

Returned Value

If successful, __ae_thread_setmode() changes the character mode.

If unsuccessful, __ae_thread_setmode() will terminate with either message EDC6254 or EDC6255.

There are no documented errnos for this function.

Related Information

- "__ae_autoconvert_state() — Returns Autoconversion State of Thread" on page 239
- "__ae_thread_swapmode() — Swap Character Mode to ASCII or EBCDIC"
- "__isASCII() — Determine Character Mode: ASCII or EBCDIC" on page 239

__ae_thread_swapmode() — Swap Character Mode to ASCII or EBCDIC

Standards

Standards/Extensions	C or C++	Dependencies
Language Environment	both	z/OS V1R2

Format

```
#include <ctype.h>

int __ae_thread_swapmode(int aemode);
```

General Description

The __ae_thread_swapmode() function sets the current thread's character mode to ASCII or EBCDIC based on the value of the argument *aemode*:

- _AE_ASCII_MODE - change thread character mode to ASCII
- _AE_EBCDIC_MODE - change thread character mode to EBCDIC

If the value for *aemode* is other than the values shown above, the thread's ASCII/EBCDIC mode will remain unchanged.

Returned Value

If successful, __ae_thread_swapmode() changes the character mode and returns the mode value corresponding to the thread's previous mode.

If unsuccessful, __ae_thread_setmode() will terminate with either message EDC6254 or EDC6255.

There are no documented errnos for this function.

Related Information

- "__ae_autoconvert_state() — Returns Autoconversion State of Thread"
- "__ae_thread_setmode() — Set Character Mode: ASCII or EBCDIC" on page 237
- "__isASCII() — Determine Character Mode: ASCII or EBCDIC"

__isASCII() — Determine Character Mode: ASCII or EBCDIC

Standards

Standards/Extensions	C or C++	Dependencies
Language Environment	both	z/OS V1R2

Format

```
#include <ctype.h>

int __isASCII(void);
```

General Description

The __isASCII() function determines the current thread's character mode of ASCII or EBCDIC.

If the character mode is ASCII, it returns 1. If the character mode is EBDCIC, it returns 0.

Returned Value

For ASCII character mode, __isASCII() returns 1.

For EBCDIC character mode, __isASCII() returns 0.

There are no documented errnos for this function.

Related Information

- "__ae_autoconvert_state() — Returns Autoconversion State of Thread"
- "__ae_thread_setmode() — Set Character Mode: ASCII or EBCDIC" on page 237
- "__ae_thread_swapmode() — Swap Character Mode to ASCII or EBCDIC" on page 238

__ae_autoconvert_state() — Returns Autoconversion State of Thread

Standards

Standards/Extensions	C or C++	Dependencies
Language Environment	both	z/OS V1R2

Format

```
#define _CVTSTATE_OFF     0
#define _CVTSTATE_ON      1
#define _CVTSTATE_SWAP    2
#define _CVTSTATE_QUERY   3

int __ae_autoconvert_state(int action);
```

General Description

When action is:

_CVTSTATE_OFF
autoconversion for the current thread is set to OFF.

_CVTSTATE_ON
autoconversion for the current thread is set to ON.

_CVTSTATE_SWAP
autoconversion is swapped to the state opposite that of the current thread state.

_CVTSTATE_QUERY
current thread's autoconversion state remains unchanged (only return value is significant).

Returned Value

Regardless of the action argument, the returned integer value for __ae_autoconvert_state is the current thread's autoconversion state before any changes were made based upon the action requested. This returned value will be either _CVTSTATE_OFF or _CVTSTATE_ON.

If the C-RTL is unable to access the THLI, or an invalid action argument is supplied, __ae_autoconvert_state will fail by returning -1.

Related Information

- "__ae_thread_setmode() — Set Character Mode: ASCII or EBCDIC" on page 237
- "__ae_thread_swapmode() — Swap Character Mode to ASCII or EBCDIC" on page 238
- "__isASCII() — Determine Character Mode: ASCII or EBCDIC" on page 239

Chapter 7. Condition Management

This section describes what constitutes a condition in Language Environment, how Language Environment supplements existing HLL condition handling methods, and how the Language Environment condition handling model works. It describes in detail the steps involved in condition handling under Language Environment, HLL-specific condition handling considerations, Language Environment — POSIX signal handling interactions, and how you can communicate events that happen in a routine to another routine.

For a discussion of Language Environment condition handling models in the POSIX(ON) and POSIX(OFF) environments, see *z/OS Language Environment Programming Guide*.

Compiler-Writer Interfaces (CWIs)

The CWIs provided by Language Environment for condition management are:

- CEE3ERP
- CEE3RSUM
- CEE3SGLN
- CEE3SGLT
- CEE3SMS
- CEEGOTO
- CEEHDHDL
- CEEMRCM
- CEEYDSAF
- __dsa_prev()
- Language-specific handler interface
- DSA exit routines
- Shunt routines
- Attention handling

CEE3ERP — Support for User-Provided Error Recovery

The CEE3ERP callable service enables user-written applications that have established their own ESTAE/ESPIE exit routines to notify Language Environment when an abend or program check occurs. With this support, Language Environment can analyze and process an error that was captured by the application's ESPIE or ESTAE exit before the error is passed to the user application.

Syntax

void CEE3ERP;

CEE3ERP

Call this CWI interface as follows:

```
L     R15,CEECAAHERP-CEECAA(,R12)
BALR  R14,R15
```

R0 **(output)**

If ESTAE processing is in effect and register 15 contains 4, register 0 contains the retry address that the user's ESTAE exit must use for resumption; otherwise, this register can be ignored.

© Copyright IBM Corp. 1991, 2002

R1 **(input)**
Contains the address of the EPIE, which was passed to the ESPIE exit, or the SDWA, which is passed to the ESTAE exit.

R15 **(output)**
Register 15 contains a value that indicates the actions that Language Environment wants the user application's ESPIE/ESTAE exit routine to take as a result of Language Environment processing the error condition. The following values are returned in register 15:

-4 Language Environment is not active in this environment; the application continues with its own error recovery processing.

0 Language Environment is not interested in the error; the application continues with its own error recovery processing.

4 Language Environment can handle the error. If SPIE processing is in effect, Language Environment sets up the EPIE; the user application's EPIE exit must return to the system to resume processing.

If STAE processing is in effect, Language Environment sets up the SDWA for retry; the user application's ESTAE exit must retry at the address specified in register zero.

16 Language Environment CAA has been overlayed

20 Language Environment condition manager is disabled; retry the operation.

Usage Notes:

1. This service should always be used with a user's ESPIE or ESTAE exit routine, regardless of the setting of the TRAP run-time option. It must also be invoked immediately by the user's ESPIE or ESTAE exit routine, before any of it's own error recovery processing.
2. This service supports AMODE 31 only.
3. This service is primarily looking for a "shunt routine". When the `CEECAADMC` field contains a non-zero value, a "shunt routine" is active. Language Environment will set up the EPIE or SDWA to resume or retry at the "shunt routine" address that was in the `CEECAADMC` field.

   When Language Environment indicates for STAE processing that it is interested in the error, Language Environment would have already issue the SETRP macro to set up the SDWA for the retry. Language Environment also returns the retry address in register 0.
4. Program checks can also occur when the Language Environment XPLINK stack needs to be expanded. In this case, Language Environment sets up the EPIE or SDWA to resume or retry at an appropriate point, and sets the return code to 4.
5. This service can be used in the z/OS and pre-initialization environments. The CICS and POSIX environments are not supported.

CEE3RSUM — Resume an interrupted program

CEE3RSUM is used to resume execution of an interrupted Language Environment program with a specified PSW and registers.

The resume point would normally be the point of interruption. This service does not return, so there is no feedback token. If the program cannot be resumed with the requested PSW and registers, CEE3RSUM will cause an ABEND.

Syntax

void CEE3RSUM *(CSRL16J_parms, flags, resume_info)*

```
void   *CSRL16J_parms
INT4   *flags
void   *resume_info
```

CEE3RSUM

From a non-XPLINK routine, call this CWI interface as follows:

```
L     R15,CEECAALEOV-CEECAA(,R12)   Address of CAA in R12
L     R15,120(,R15)
BALR  R14,R15
```

CSRL16J_parms (input)

This is a pointer to a data area that can be passed to the CSRL16J callable service.

flags **(input)**

This parameter is not used, and should point to a fullword of zero bits.

resume_info **(input)**

This parameter points to an optional area containing resume information The layout of this area is:

```
        Format 1 Resume information area
        +-------------------------------------------------------+
    +00 ³  Version = 1                                          ³
        +-------------------------------------------------------+
    +04 ³  Validity flags:                                      ³
        ³   X'80000000' - valid_int_DSA field is present        ³
        ³                 On  : Indicates that the DSA to be    ³
        ³                       resumed is in the Valid interrupt ³
        ³                       DSA field (below)               ³
        ³                 Off : Get resume DSA address from     ³
        ³                       reg 4 or reg 13 in the CSRL16J  ³
        ³                       registers (1st parm to CEE3RSUM) ³
        ³   X'40000000' - sigset field is present               ³
        ³                 On  : Indicates that the signal mask  ³
        ³                       is to be restored to the value in ³
        ³                       the sigset field (below) before ³
        ³                       the resume is done.             ³
        ³                 Off : Indicates that the signal mask  ³
        ³                       is not to be restored before the ³
        ³                       resume is done.                 ³
        ³   X'20000000' - oldest_up_DSA field is present        ³
        ³                 On  : Indicates that the oldest up DSA ³
        ³                       field is present (see below)    ³
        ³                 Off : Indicates that the active DSA   ³
        ³                       chain needs to be scanned to find ³
        ³                       the oldest Upstack DSA.         ³
        ³   X'0FFFFFFF'   (reserved -- should be 0)             ³
        +-------------------------------------------------------+
    +08 ³  Valid interrupt DSA (filled in if the X'80000000' flag ³
        ³  is set on)                                           ³
        +-------------------------------------------------------+
    +0C ³  (reserved - should be 0)                             ³
        +-------------------------------------------------------+
    +10 ³  Sigset -- signal mask to be restored before the resume ³
    +14 ³  is to be done.  (filled in if the X'40000000' flag is ³
        ³  set on)                                              ³
        +--------------+----------------------------------------+
    +18 ³ Resume DSA   ³       (reserved - should be 0)          ³
        ³ format(up=0, down=1)                                  ³
        +--------------+----------------------------------------+
```

```
+1C ³ (reserved -- should be 0)                                ³
    +--------------+-------------------------------------------+
+20 ³ Oldest up DSA -- this is the oldest Upstack DSA          ³
    ³ that is not older than the DSA to be resumed.  (If the   ³
    ³ DSA to be resumed is Upstack, this must be the same as   ³
    ³ the DSA being resumed.)                                  ³
    +--------------+-------------------------------------------+
+24 ³ (reserved - should be 0)                                 ³
    +-----------------------------------------------------------+
+28 ³ (reserved - should be 0)                                 ³
 .  ³                                                          ³
+3F +-----------------------------------------------------------+
+40 ³ (reserved - should be 0)                                 "
+7F +-----------------------------------------------------------+
+80 ³ (reserved - should be 0)                                 ³
 .  ³                                                          ³
+FC ³                                                          ³
+100+-----------------------------------------------------------+
```

If *resume_info* pointer is NULL, the effect is the same as pointing to a resume information area with all validity flags off.

Usage Notes:

1. When CEE3RSUM is called the CAA stack direction must be valid, and the caller must have a proper DSA chained into the Language Environment stack.
2. All fields in the CSRL16J parm area must be filled in properly. If the L16JSUBPOOL, L16JLENGTHTOFREE, and L16JAREATOFREE fields are set up, the CSRL16J area will be freed before the program is resumed (this area may not be freed up if an ABEND is declared). If the CSRL16J area is to be freed, the CEE3RSUM service uses CSRL16J rather than the RP instruction (so that the free can be done by directly by z/OS).
3. If the area to free includes any part of the CSRL16J parameter area, this parm area must not lie in any DSA on the Language Environment stack. (It must be in GETMAINed storage.) If there is no area to free, or the area to free does not include any part of the CSRL16J parm area, this area may lie in a DSA on the Language Environment stack (including a DSA that will be freed up when the resume occurs).
4. If the *valid_interrupt_dsa* field in the resume information area is not filled in, register 4 or 13 in the CSRL16J parms must point to a valid XPLINK or non-XPLINK Language Environment DSA on the stack. Register 4 or 13 may point to a transitional or overflow stack frame, but the PSW and registers must not point back to a place where the stack direction in the CAA is invalid. If these registers are not valid, ABEND 4091-42 may occur.

   If the *valid_interrupt_dsa* field in the resume information area is filled in, reg 4 or 13 in the resume registers does not need to point to a valid DSA. However, if the *valid_interrupt_dsa* is not correct, the same ABEND 4091-42 may occur.
5. The Resume PSW in the CSRL16J area must be complete, with all AMODE, ilc, cc etc. fields properly set. If the PSW is incorrect, ABEND 4091-43 or 4091-45 can occur.
6. The caller must have restored the floating point registers (and control registers, if required) before calling CEE3RSUM. CEE3RSUM does not alter any floating point or control registers before resuming the program.
7. CEE3RSUM does not notify the debugger or member languages of the resume. If required, the caller must do this before calling CEE3RSUM.
8. CEE3RSUM cannot be used to jump over user-code stack frames.
9. CEE3RSUM cannot be used to jump over any stack frames that require PL/I exit GOTO processing.

10. CEE3RSUM cannot be used to jump over any stack frames that require event 11 calls (PL/I DSA exit event stack frames).
11. CEE3RSUM cannot be used to jump over any stack frames that require FORTRAN exit DSA events, COBOL TGT DSA events, or that have user condition handlers currently registered.
12. CEE3RSUM cannot be used to jump over any stack frames that have run CEE3SMS or CEE3SRT.
13. CEE3RSUM can be used to jump over XPLINK transitional routines that are invoked as Exit DSAs.
14. CEE3RSUM must not be used to resume back into a function that has done any alloca() requests since the time of interruption. If this restriction is violated, ABEND 4091-42 or other problems may occur.
15. CEE3RSUM must run in 31-bit addressing mode.
16. The CEE3RSUM service uses either the RP instruction, CSRL16J, or some other method to resume. In all cases, the main input to CEE3RSUM is a CSRL16J parm area.

CEE3SGLN — Signal Invalid Resume Request

The CEE3SGLN callable service signals a condition to the Language Environment condition manager; optionally, this service can also provide qualifying data and create an ISI for a condition for which resumption is not supported.

Syntax

void (*CEELIBVxSGLN) (*cond_rep, [q_data_token]*)

```
FEEDBACK  *cond_rep;
INT4      *q_data_token;
```

CEELIBVxSGLN

A field in the Language Environment LIBVEC that points to the signal invalid resume request routine.

Call this CWI interface as follows:

```
L     R15,CEECAACELV-CEECAA(,R12)     CAA address is in R12
L     R15,3008(,R15)
BALR  R14,R15
```

cond_rep **(input)**

A condition token that defines the condition to be raised; it is passed by reference.

q_data_token **(input/optional)**

A 32-bit data token that is passed to the condition manager when a condition is signal; this value may be a pointer or any other information that may be required. This information is placed in the ISI for use in accessing the qualifying data associated with the given instance of the condition.

Usage Note: CEESLGN cannot signal a severity 0 or 1 condition. If this is attempted, the following condition is passed to CEEHDSP.

CEE3B1	Severity	3
	Msg_No	3425
	Message	Severity 0 or 1 condition signaled with CEESGLN.

CEE3SGLT — Signal a Condition and Terminate

The CEE3SGLT callable service signals a condition for which resumption, without moving the resume cursor, is not supported.

Syntax

void (*CEELIBVxSGLT) (*cond_rep, [q_data_token], [fc]*)

```
FEED_BACK *cond_rep;
INT4      *q_data_token;
FEED_BACK *fc;
```

CEELIBVxSGLT

A field in the Language Environment LIBVEC that points to the signal and terminate routine (CEESERC).

Call this CWI interface as follows:

```
L     R15,CEECAACELV-CEECAA(,R12)     CAA address is in R12
L     R15,2764(,R15)
BALR  R14,R15
```

cond_rep **(input)**

A condition representation that is passed by reference.

q_data_token **(input/optional)**

A 32-bit data object to be placed in the ISI for use in accessing the qualifying data associated with the given instance of the condition.

fc **(output/optional)**

The parameter in which the callable service feedback code is placed. The following conditions can result from this service.

CEE000	Severity	0
	Msg_No	None
	Message Text	The service completed successfully.
CEE069	Severity	0
	Msg_No	0201
	Message Text	An unhandled condition was returned in a feedback code.
CEE0CE	Severity	1
	Msg_No	0398
	Message Text	Resume with new input.
CEE0CF	Severity	1
	Msg_No	0399
	Message Text	Resume with new output.
CEE0EB	Severity	3
	Msg_No	0459
	Message Text	Not enough storage was available to create a new instance-specific information block
CEE0EE	Severity	3
	Msg_No	0462
	Message Text	Instance-specific information for the condition token with message number *message number* and facility ID *facility ID* could not be found.

Usage Notes:

1. Control is never returned to the next sequential instruction following the call to this routine.
2. The intent of CEESGLT is to provide a way for members to raise a condition and not allow resumption unless the resume cursor has been moved explicitly to a new position.
3. Requesting resumption when the resume cursor has not been moved causes CEE088 to be signaled. If resumption is once again requested without moving the resume cursor, the environment is terminated with abend 4091-12. CEE088 is defined as follows:

CEE088	Severity	3
	Msg_No	0264
	Message	An invalid request to resume from a condition was detected.
	Explanation	A condition handler attempted to resume for a condition for which resumption is not allowed without moving the resume cursor. This condition can not be handled and resumed without moving the resume cursor. If resumption is requested without moving the resume cursor, the environment is terminated with abend 4091-12.
	Programmer Response	Move the resume cursor as part of handling the condition.
	System Action	The resume request that triggered this condition is ignored.

CEE3SMS — Set Machine State

This CWI interface dynamically builds a machine state block that contains the necessary machine state information for use with CEEMRCM.

Syntax

void (*CEECELVBSMS) (*gprs, float0, float2, float4, float6, stackframe, psw, [ars], machine_state, [fc]*)

```
INT        *gprs[16];
FLOAT      *float0;
FLOAT      *float2;
FLOAT      *float4;
FLOAT      *float6;
POINTER    *stackframe;
CHAR       *psw[8];
INT        *ars[16];
TOKEN      *machine_state;
FEED_BACK  *fc;
```

CEECELVBSMS

Call this CWI interface as follows:

```
L     R15,CEECAACELV-CEECAA(,R12)     CAA address is in R12
L     R15,3464(,R15)
BALR  R14,R15
```

CEECELVBSMS
A field in the Language Environment LIBVEC that points to the set machine state routine (CEE3SMS).

gprs **(input)**
An array of the 16 general purpose registers arranged in the order of gpr 0 through gpr 15.

float0 **(input)**
The value of the floating-point register 0 associated with the machine state.

float2 **(input)**
The value of the floating-point register 2 associated with the machine state.

float4 **(input)**
The value of the floating-point register 4 associated with the machine state.

float6 **(input)**
The value of the floating-point register 6 associated with the machine state.

stackframe **(input)**
The stack frame for this *label_var*. It must be a stack frame that is active on the call chain.

psw **(input)**
The program status word that contains information for the code point that gains control. In particular, it contains the code address that is to gain control and the program mask that is to be restored. The PSW must be complete and correct for execution at the indicated address. The instruction address must contain the correct high-order bit indicating the addressing mode.

machine_state **(output)**
A token that represents the machine state block. The machine state block is allocated by Language Environment from heap storage. The machine state block is automatically freed by Language Environment when the code associated with the *stackframe* returns to its caller.

fc **(output/optional)**
The parameter in which the callable service feedback code is placed. The following conditions can result from this service.

CEE000	Severity	0
	Msg_No	N/A
	Message	The service completed successfully.
CEE390	Severity	3
	Msg_No	3360
	Message	The stack frame was not found on the call chain.

Usage Notes:

1. This is intended for building a machine state for use by the CEEMRCM routine. The token returned by this routine can be used as input to CEEMRCM.
2. Language Environment automatically frees the heap storage for the machine state block when the routine that is associated with the *stackframe* returns to its caller. Attempts to use the machine state block after it is freed result in unpredictable behavior.
3. If the saved machine state points into an XPLINK routine that does alloca(), the value of register 4 in the *gprs* parameter must point to the DSA currently on the

Language Environment stack for that routine. In other words, the routine owning the DSA cannot have done any alloca() requests since the value of register 4 was captured.

CEEGOTO — Restart Execution at Specified Label

CEEGOTO is used to restart execution at a specified label within a stack frame. It is supported to work only from one language to that same language.

CEEGOTO operates within a single thread (and thus, on one stack) and can only target earlier stack frames on that stack. If the Language Environment condition manager is on the stack and the range of CEEGOTO is from a stack frame more recent than the Language Environment condition manager to a stack frame less recent than the Language Environment condition manager, the Language Environment condition manager pops off the stack and the corresponding condition handler is terminated at that point. For more deeply nested conditions, several can be canceled at once.

A return to the caller occurs only when the feedback token is provided and a condition is detected.

Syntax

void CEEGOTO (*target_id, [fc]*)

```
LABEL     *target_id;
FEED_BACK *fc;
```

CEEGOTO

Call this CWI interface as follows:

```
L     R15,CEECAACELV-CEECAA(,R12)
L     R15,20(,R15)
BALR  R14,R15
```

target_id **(input)**

A label variable passed by reference.

The first word of the label points to an active DSA. The DSA does not necessarily need to exist within the Language Environment-managed stack. However, it does need to be on the back chain of save areas.

The second word of the label variable points to the instruction that receives control when CEEGOTO is run. If this address is zero, then the address is obtained from the saved R14 in the DSA specified in the first word. AMODE information is obtained from the high-order bit of the address.

Non-XPLINK label variable: The target_DSA_address field in the first 4 bytes of a non-XPLINK label variable is always non-zero. The *base_register_instruction* contains an instruction that, when run using an assembler EX instruction, restores the base register(s) needed by the *target_instruction*. A non-XPLINK label variable cannot be used to GOTO or resume an XPLINK routine. Figure 64 on page 250 shows the format of the non-XPLINK label variable.

+00	*Address of target_save_area -- must be non-zero*
+04	target_instruction -- may be zero
+08	base_register_instruction -- may be zero

Figure 64. Format of a non-XPLINK Label Variable

Extended XPLINK label variable: The first 4 bytes of an extended label variable are zero. An extended label variable can be used to GOTO or resume either an XPLINK or non-XPLINK routine. When resuming an XPLINK routine, the resume registers are contained in the extended label variable itself, not the DSA to be resumed. Figure 65 shows the XPLINK extended format label variable.

Figure 66 on page 252 shows the XPLINK extended format label variable – resume area.

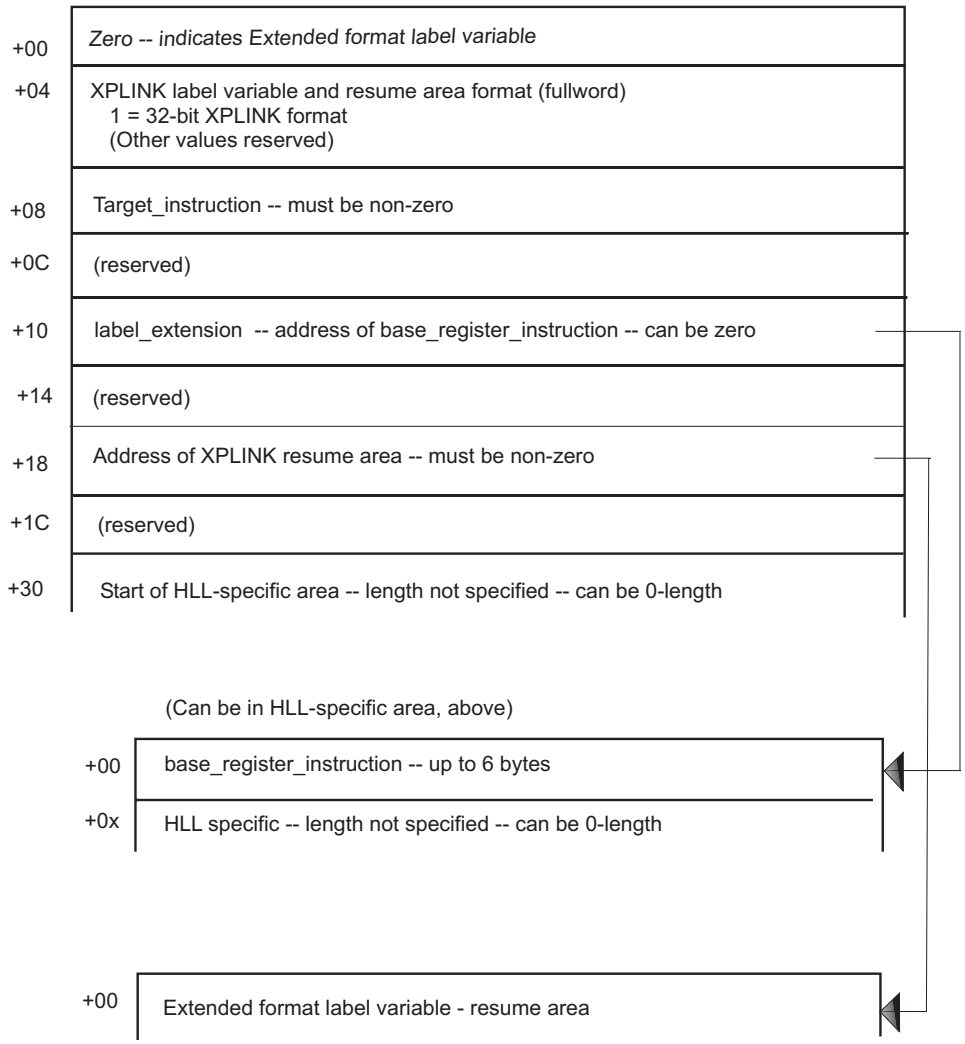

Figure 65. XPLINK Extended Format Label Variable

Note: The storage for the label variable is expected to be allocated within the storage of the lexical scope of the label variable so that the storage is released when the lexical scope is collapsed.

+00	Flags - x'80000000' -- FP regs 0,2,4,6 valid x'40000000' -- FP regs 0-15 valid (overrides x'80000000' bit) x'20000000' -- FP control Register valid x'10000000' -- Call chain DSA fixup complete x'01000000' -- Restarting XPLINK alloca() routine
+04 +08 +0C	(reserved) (reserved) (reserved)
+10	target_dsa_address -- address of DSA to be resumed. This address may be stale (i.e. point to the place where the DSA used to start before alloca() was called. alloca() changes the starting address of the DSA.)
+14 +18 +1C +20 +24 +28 +2C	(reserved)
+30	reference_dsa -- If the target routine does not issue alloca(), this fieldmust be zero. The target_dsa_address field is still valid. If the target routine is an XPLINK routine that issues alloca(), this field must point to the address of the DSA of the logical caller of the routine being branched to. The target_dsa_address field may be stale in this case (see above).
+34	(reserved)
+38	DSA reg 7 for alloca() backout -- needed only if reference_dsa is non-zero. This saved Register 7 value is stored back into the moved alloca() DSA, before CEEGOTO branches back to target_instruction
+3C	(reserved)
+40 +44 . +78 +7C	Registers 0-15, 4-bytes each. Selected values are loaded into regs before CEEGOTO branches to target_instruction. When going back to a non-XPLINK routine, these values may also be copied into the target_DSA.
+80 +84 +FC	(reserved)
+100 +17C	Floating-point registers 0-15 (8 bytes each) Note: Slots 0,2,4,6 or slots 0,1,2,..15 are valid, depending on setting of X'80000000' and X'40000000' bits in flags
+180	Floating-point Control Register (Valid, if X'20000000' flag bit is on)
+184 +188 +1FC	(reserved)
+200	Start of HLL-specific area -- length not specified -- can be 0-length

Figure 66. XPLINK Extended Format Label Variable – Resume Area

fc **(output/optional)**

One of the following condition tokens, which are passed by reference. A return to the caller occurs only when a condition is detected.

CEE07Q	Severity	2
	Msg_No	0250
	Message	The *target_id* was not found on the stack.
CEE07R	Severity	2
	Msg_No	0251
	Message	An invalid *target_id* was provided.

Usage Notes:

1. As routines are popped off the stack, the DSA exit routines are invoked for those DSAs marked as an exit DSA.
2. The *base_register_instruction* in the label variable is run using the assembler instruction EX and is intended to restore the base register needed by the target instruction. This instruction is executed immediately prior to the branch to the *target_instruction*. The values of the registers are as follows:
   R0-R12
   Restored from the *target_dsa*
   R13 The *target_dsa*
   R14 The address of the *target_instruction*
   R15 The address of the *base_register_instruction*

   When resuming with an extended-format LABEL variable that resides in an XPLINK DSA or alloca() area, that area may have been freed before the *base_register_instructon* is executed.

   When resuming into an XPLINK function the register values when the EX instruction is executed are:
   R0-R3
   Restored from extended format resume area in the LABEL variable
   R4 Address of the *target_dsa*
   R5 Restored from Extended format resume area in the LABEL variable
   R6 The address of the *base_register_instruction*

   Note: This instruction is not copied to a safe place before it is executed, so it must not reside in an XPLINK DSA or XPLINK alloca() area that will get freed when CEEGOTO runs.
   R7 The address of the *target_instruction*
   R8-R15
   Restored from extended format resume area in the LABEL variable
3. If the *base_register_instruction* is zero, the EXecute is not performed.
4. CEEGOTO requests from a POSIX application (using `longjmp()` or `siglongjmp()`) are intercepted so that proper cleanup routine and destructor function invocation can take place. While executing a cleanup routine (for example, a routine established using CEECPSH), a CEEGOTO results in execution of all of the *pushed but not popped* cleanup routines for more recent stack frame's than the target stack frame. This rule applies for both normal processing and for the execution of cleanup routines during thread termination. If the jump buffer was established in the cleanup routine (for example, the target of the CEEGOTO is in the same cleanup routine) control continues at that point.

   CEEGOTO invocation while processing a destructor function (during thread termination) is allowed, but the target of the jump must be established by the destructor function. (This is required since all of the user code has been removed from the stack.)

5. When resuming an XPLINK routine that issues an alloca(), any alloca() requests that were done after the LABEL variable was set up will be undone. When resuming into a non-XPLINK routine, alloca() requests already made by that routine are not undone.
6. A non-extended format LABEL variable passed to CEEGOTO must not reside in an XPLINK DSA or alloca() area that will get freed when the program is restarted.
7. An extended format LABEL variable passed to CEEGOTO can reside in an XPLINK or non-XPLINK DSA that will be freed when execution is restarted. It can also reside in storage obtained using XPLINK alloca() that will be freed when execution is restarted. The LABEL variable can also reside elsewhere, in which case CEEGOTO will not free it.
8. When an XPLINK program is restarted, register 7 always points to the *target_instruction*. When a non-XPLINK program is restarted, register 14 always points to the *target_instruction*. This may limit the use of CEEGOTO to restarting progams at a return point after a call.
9. The *base_register_instruction* will not be copied into a safe place before CEEGOTO is executed via the EX instruction. The *base_register_instruction* and any operands it uses must not reside in an XPLINK DSA or XPLINK alloca() area that is freed during the processing in CEEGOTO.

CEEHDHDL — Register an Event Handler for Stack Frame Zero Processing

CEEHDHDL is used to register a member event handler for stack frame zero. This register condition handler is called following the normal stack frame zero condition handler.

Syntax

void CEEHDHDL (*memberid, [fc]*)

```
LABEL     *memberid;
FEED_BACK *fc;
```

CEEHDHDL

Call this CWI interface as follows:

```
L       CEECAACELV-CEECAA(,R12)    CAA address is in R12
L       R15,3376(,R15)
BALR    R14,R15
```

memberid **(input)**

The member ID of the member event handler that is to gain control at stack frame zero conditions that remain unhandled. This condition handler is to gain control at the termination of the condition manager as opposed to gaining control at the termination of stack frame zero.

fc **(output/optional)**

A condition token passed by reference. The following conditions are returned in *fc*:

CEE000	Severity	0
	Msg_No	N/A
	Message	The service completed successfully.

CEE36S	Severity	2
	Msg_No	3292
	Message	Member already registered.

CEEMRCM — Move the Resume Cursor

The callable service CEEMRCM allows the resume cursor to be moved to a specific predefined location within the active call chain. A recommended approach for using this service is to start with the current resume cursor machine state. This can be obtained from the CIB's resume cursor. Changes then can be made to the registers, PSW, or other components in your local copy of the machine state. Later, if a resume function code is returned to condition management, then the information from the updated machine state is used to resume the application program.

Initially, the resume cursor is placed after the machine instruction that caused the condition. Whenever the resume cursor is moved, as each stack frame is passed, any associated exit is invoked. This moving also cancels any associated user handlers. The direction of movement is always toward older stack frames and never toward newer stack frames. The action occurs only after the condition handler has returned to the condition manager. Multiple calls to CEEMRCM yield the NET results of the calls; that is, if two calls move the resume cursor to different places for the same stack frame, the most recent call is used for that stack frame.

Syntax

void CEEMRCM (*position, [fc]*)

```
POINTER   *position;
FEED_BACK *fc;
```

CEEMRCM

Call this CWI interface as follows:

```
L       CEECAACELV-CEECAA(,R12)    CAA address is in R12
L       R15,2856(,R15)
BALR    R14,R15
```

position **(input)**

A pointer to a valid machine state block to which the resume cursor is be moved.

fc **(output/optional)**

A condition token passed by reference; conditions returned in *fc* include:

CEE000	Severity	0
	Msg_No	N/A
	Message	The service completed successfully.
CEE07V	Severity	2
	Msg_No	0255
	Message	*position* parameter is not a machine state block.

Usage Notes:

1. No stub is shipped for the CWI CEEMRCM.
2. Exit DSA routines are invoked as the resume cursor is moved across stack frames.

3. The machine state provided to the CWI CEEMRCM has the format as found in the resume cursor.
4. When a resume is requested, the state of the machine indicated in the machine state block is established prior to the resume point being entered.
5. If the resume point is in an XPLINK routine, all storage obtained by any alloca() requests done after the machine state was saved (perhaps by an earlier call to CEE3SMS) will be freed up before the XPLINK routine is resumed. In other words any alloca() requests issued after the machine state was saved and before this CEEMRCM call will be undone. If the resume point is in a non-XPLINK routine that issues alloca(), alloca() requests issued after the machine state was saved and before the CEEMRCM call are not undone. When resuming either an XPLINK or non-XPLINK routine, any alloca() requests issued before the machine state was saved are not undone.

CEEYDSAF — Find the Previous DSA

CEEYDSAF is used to identify the DSA prior to the passed DSA. It requires that the DSA used as input be a valid OS stackframe or an XPLINK stackframe. It also requires that the stack format be passed so it uses the proper unwind technique.

Syntax

void CEEYDSAF *(dsa_in, dsa_prev, dsa_format, (physical), (ph_callee), (ph_callee_dsa_format), (fc)*)

```
POINTER       *dsa_in;
POINTER       *dsa_prev;
INT4          *dsa_format;
INT4          *physical;
POINTER       *ph_callee;
INT4          *ph_callee_dsa_format;
FEED_BACK     *fc;
```

CEEYDSAF

From a non-XPLINK routine, call this CWI interface as follows:

```
L     R15,CEECAALEOV-CEECAA(,R12)   Address of CAA in R12
L     R15,0(,R15)
BALR  R14,R15
```

dsa_in **(input)**
Address of an OS or XPLINK format DSA.

dsa_prev **(output)**
Address of the OS or XPLINK format DSA behind DSA_in.

dsa_format **(input/output)**
Format of DSA:

0 OS

1 XPLINK

-1 The CWI determines the *dsa_format* . On input it pertains to the format of the DSA of the *dsa_in* parameter. On output it pertains to the format of the returned DSA in the *dsa_prev* parameter. The -1 indicates the CWI will attempt to determine the format of the passed DSA first. In all cases, the DSA format returned will be for the DSA returned by the service in *dsa_prev*.

physical **(input/optional)**
When physical = 1, physical unwinding requested. This means library-injected and XPLINK transitional stack frames are to be skipped over.

ph_callee **(output/optional)**
This parameter is designed to be used in conjunction with logical unwinding. It provides a pointer to the stack frame physically located 'in front' of the DSA returned as the previous logical. If no transitionals or library-injected DSAs are present, this is simply the DSA passed as input. If a transitional or an injected DSA is present, this is a pointer to it.

ph_callee_dsa_format **(output)**
Format of DSA of Physical Callee : 0 = OS 1 = XPLINK Used in conjunction with the Ph_Callee parameter, this is the DSA format of the returned callee.

fc **(output/optional)**
The parameter in which the callable service feedback code is placed. The following conditions can result from this service.

CEE000	Severity	0
	Msg_No	n/a
	Message	The service completed successfully
CEE3EQ	Severity	2
	Msg_No	3546
	Message	An error occurred while attempting to find the previous DSA.
CEE3ER	Severity	2
	Msg_No	3547
	Message	The physical callee DSA was requested and the physical callee format was not.
CEE3ES	Severity	2
	Msg_No	3548
	Message	The callable service was passed a DSA format of -1 and was unable to determine the format of the passed DSA.

Note: It is recommended, for performance reasons, that when ever possible, this service is passed the DSA format instead of determining it dynamically.

__dsa_prev() — Chain back to previous DSA

The __dsa_prev() function returns the address of the DSA prior to *dsa_p* on the Language Environment stack. Two types of backchaining request are supported -- logical and physical. The *req_type* parameter is used to select either logical or physical backchaining. For physical backchaining, the address of the DSA immediately prior to *dsa_p* is always returned. That DSA can be a transition or overflow DSA, or the DSA of a normal routine. For logical backchaining, __dsa_prev() keeps looking backward on the Language Environment stack until a normal DSA is found, skipping over any transition or overflow DSAs.

If the dummy Language Environment DSA is reached while backchaining, a NULL pointer is returned, and errno is set to **ESRCH**.

__dsa_prev()

__dsa_prev() can be used when the Language Environment stack of interest is not in the current address space. To access storage outside the current address space, the user must provide the *callback_p* parameter. *callback_p* is a pointer to a user-written function that fetches all required data for __dsa_prev(). Generally, the (**callback_p*)() function would obtain the data using some application-dependent method (like BPX1PTR) and move it into the current address space, where __dsa_prev() can access it directly. If the Language Environment stack of interest is in the same address space and is directly accessible to __dsa_prev(), *callback_p* can be NULL.

Syntax

```
#include <edcwccwi.h>

void __dsa_prev (const void * (dsa_p, int req_type, int dsa_fmt, void *
(*callback_p)(void *data_p, size_t data_l), const void *caa_p, int *prev_fmt,
void **ph_callee_dsa_p, int *ph_callee_dsa_fmt; fc));
```

*const void **dsa_p*

Pointer to the current DSA. __dsa_prev() returns a pointer to the DSA logically or physically previous to *dsa_p*, depending on the value of the *req_type* parameter. *dsa_p* may point to a DSA in another address space or in some other place not directly accessible by __dsa_prev(). If this address is not directly accessible, the *callback_p* parameter must be non-NULL. The callback function will be used to access *dsa_p* indirectly.

int req_type

Controls whether or not transition and overflow DSAs are returned. The allowed values for *req_type* are:

__EDCWCCWI_PHYSICAL

Physical backchaining causes __dsa_prev() to return the address of the DSA immediately prior to *dsa_p*. The returned DSA may be either a transition, overflow, or normal DSA.

__EDCWCCWI_LOGICAL

Logical backchaining causes __dsa_prev() to skip over any transition or overflow DSAs that it finds while backchaining, and not pass them back. The address of the most recent normal DSA previous to *dsa_p* is returned. Doing logical backchaining is the same as doing physical backchaining one or more times, stopping when a normal DSA is found.

int dsa_fmt

The format of the DSA pointed to by *dsa_p*. The allowed values for *dsa_fmt* are:

__EDCWCCWI_UP

This value indicates that *dsa_p* points to a non-XPLINK DSA.

__EDCWCCWI_DOWN

This value indicates that *dsa_p* points to an XPLINK DSA.

*void * (*callback_p)()*

Pointer to a user-provided function that fetches data not normally accessible by __dsa_prev(). If *callback_p* is NULL, __dsa_prev() accesses *dsa_p* and any other required Language Environment data areas directly in the current address space. The Language Environment stack and all other data needed for backchaining must be directly accessible to __dsa_prev() in this case.

The user-provided (*callback_p)() function is passed the address and length of data to access. It must fetch the data in some application-dependent manner, and make the data available in the current address space in a place accessible to __dsa_prev(). (*callback_p)() must return a pointer to the copied data. This data must remain available to __dsa_prev() until the next call to (*callback_p)(), or until __dsa_prev() returns to its caller, whichever happens first. On subsequent calls, (*callback_p)() is allowed to reuse the same data passback area.

There is no provision for (*callback_p)() to pass back an error return code, indicating that the requested data could not be obtained. If (* callback_p)() cannot return the requested data, it must not return to __dsa_prev(). When an error occurs, (*callback_p)() may:

- longjmp() back to some error return point in the user code that called __dsa_prev()
- ABEND or otherwise terminate abnormally
- exit(), pthread_exit(), etc.
- Raise a caught signal where the catcher does longjmp() so as not to return to __dsa_prev()
- Use Language Environment condition management to bypass __dsa_prev() after the error and resume in user code.
- Recover in some other way that does not involve returning to __dsa_prev().

__dsa_prev() calls (*callback_p)() with two parameters:

*void **data_p*
: Pointer to the start of the required data. This address might not be in the current address space.

size_t data_l
: The number of bytes of data required. *data_l* will never exceed 16 bytes. If **(***callback_p***)()** cannot pass back the complete data requested, it must not return to __dsa_prev().

*const void **caa_p*
: Pointer to the Language Environment CAA for the thread owning the *dsa_p* DSA. This parameter must be non-NULL whenever *callback_p* is non-NULL, and it may point to a CAA in some other address space. If *callback_p* is NULL, *caa_p* may also be NULL. If *caa_p* is NULL, the current CAA (of the thread where __dsa_prev() is running) is used. In this case, it is assumed that *dsa_p* points to a DSA on the Language Environment stack for the caller's thread.

*int **prev_fmt*
: Pointer to an optional passback area where __dsa_prev() will return the DSA format of the prior DSA. The possible values passed back in this field are the same as the values for *dsa_fmt*.

  If *prev_fmt* is NULL, the DSA format for the previous DSA is not passed back. If __dsa_prev() cannot find the previous DSA and returns a NULL value, the field pointed to by *prev_fmt* is not altered.

*void ***ph_callee_dsa_p*
: Pointer to an optional passback area where __dsa_prev() will return the address of the DSA of the physical callee. The physical callee is the function called by the function owning the returned DSA. The physical callee can be a Language Environment overflow or stack expansion routine, or it can be a

normal user or Language Environment function. If physical backchaining is requested, ***ph_callee_dsa_p** will be the same as *dsa_p* after __dsa_fmt() returns.

If *ph_callee_dsa_p* is NULL, the address of the physical callee DSA is not passed back.

If __dsa_prev() cannot find the previous DSA and returns a NULL value, the field pointed to by *ph_callee_dsa_p* is not altered.

*int *ph_callee_dsa_fmt*
ph_callee_dsa_fmt is a pointer to an optional passback area where __dsa_prev() will return the DSA format of the physical callee's DSA. The possible values passed back in this field are the same as the values for *dsa_fmt*.

If *ph_callee_dsa_fmt* is NULL, the format of the physical callee DSA is not passed back. If __dsa_prev() cannot find the previous DSA and returns a NULL value, the field pointed to by *ph_callee_dsa_fmt* is not altered.

Returned Value

If successful, __dsa_prev() returns the address of the previous DSA. In addition, if errno is zero when __dsa_prev() is called, one of the following errno values may be set to pass back additional information:

EACCES
This errno value indicates that the returned DSA pointer is for the Language Environment dummy DSA (pointed to by the CAA ceecaaddsa field). This is not an error, and all returned or passed-back information is valid.

EALREADY
This errno value indicates that the input DSA pointer (*dsa_p*) is for the Language Environment dummy DSA (pointed to by the CAA ceecaaddsa field). This is not an error, and all returned or passed-back information is valid.

If unsuccessful, __dsa_prev() returns a NULL pointer, and sets errno to one of the following values:

ESRCH
This error indicates that there was no DSA previous to *dsa_p* that could satisfy the physical or logical backchaining request. This error also occurs if *dsa_p* is NULL when __dsa_prev() is called.

EINVAL
This error can occur if:

- *caa_p* was NULL and *callback_p* was not NULL.
- *req_type* was not **__EDCWCCWI_PHYSICAL** or **__EDCWCCWI_LOGICAL**.
- *dsa_fmt* was not **__EDCWCCWI_UP** or **__EDCWCCWI_DOWN**.

Usage Notes:

1. If the return code from __dsa_prev() is NULL, the listed errno values are set even if errno was non-zero when __dsa_pr() was called. When the return code from __dsa_pr() is not NULL, errno is not changed if it was not zero when __dsa_prev() was called.
2. __dsa_prev() may cause program checks if it accesses invalid addresses. This is especially likely to happen if *callback_p* is NULL and the Language

Environment stack being looked at is corrupted. For this reason, the caller should consider having a signal catcher set up to handle SIGSEGV with appropriate error recovery.

Interface to the Language-Specific Handlers

For information on the condition handlers, see the following sections:

- For handling conditions represented by the CEECIB (not for stack frame zero), see “Event Code 1 — Handle Condition Represented by the CIB Event” on page 445.
- For performing enablement for this stack frame, see “Event Code 2 — Perform Enablement for this Stack Frame Event” on page 447.
- For handling conditions in accordance with the language defaults (stack frame zero), see “Event Code 3 — Handle Condition According to Language Defaults Event” on page 448.
- For information about a resumption from a condition handler within a *target_dsa*, see “Event Code 10 — Resume from a Condition Handler Event” on page 461.

DSA Exit Routines

A DSA exit routine is used to perform activities on behalf of a stack frame when the stack is being collapsed as the result of a return from a main, an immediate STOP request, a GOTO out of block, or a move resume cursor request.

Exit routines allow for activities such as the closing of files and releasing of system resources that are held.

Members not requiring Exit DSAs may, for performance reasons, request that this processing be disabled. This applies to normal, or non-abend, enclave terminations initiated by a call to the CEETREN or CEETREC services. This is implemented with a parameter used on the Enclave Initialization Event, Event Code 18. Refer to this event for more information on enabling this feature. When this feature is on, the traverse of the stack for exit DSA routines is not executed and the DSA Exit event call is skipped. If multiple language members are present in an enclave, all must indicate that the DSA Exit scan may be skipped. Stack traverse and DSA Exit processing continues to occur for terminations with an abend pending or a GOTO out of block or move resume cursor request whether the feature is enabled or not. If the exit DSA scan is to be skipped, a flag in the EDB, ’CeeEdb_Term_Noedsa’ is activated.

An exit routine is established by one of two mechanisms, as described below.

1. The stack frame (DSA) is marked as requiring DSA exit processing by flags set within the DSA.
2. The PPA1 has the exit DSA flag on.

The exit routine has two different interfaces, depending upon the mechanism used to establish the exit.

PPA-Marked Exit Routines

For the event handler when a stack frame is abnormally collapsed, See “Event Code 11 — DSA Exit Routines Event” on page 462.

DSA-Marked Exit Routines

An exit can be marked in the first word of the DSA. The first byte of the DSA must be marked with bit 4 on. The second byte of the DSA must have the X'08' flag on indicating this DSA is an exit DSA.

When the exit routine is to be driven, the X'08' in the second byte is turned off and a return using R14 is made to the routine. In addition, the Language Environment condition manager takes the return address of one level back. Turning the flag off allows the routine to interrogate whether the return was due to a normal return or as an exit routine. When the return is due to an abnormal collapse of the stack frame, there are no parameters passed back to the routine.

To establish the DSA exit, the FORTRAN I/O library routines must place the following value into the first word of the calling application's DSA (in binary):

```
00000000 01000000 xxxxxxxx xxxxxxx1
```

where *x* means any setting of the bit is valid in bytes 3 and 4. The FORTRAN event handler will be driven for the exit DSA event (Event Code 11).

To remove the exit, the FORTRAN library can place any other pattern into the first word of the DSA that will not match the pattern above and will not conflict with other conventions of word zero established in previous releases of Language Environment.

An exit can also be marked in two words of the DSA. Byte 0 of the DSA is nonzero. In byte 1 of the DSA, either bit 6 is non-zero, or bit 0 is nonzero and in byte 77 (hex), bit 0 is nonzero.

Upon completion of the exit routine, the exit routine returns to its caller, which is the Language Environment condition manager.

Shunt Routine

A shunt is a low-level error handling routine intended for use by language library routines and debug tools. A shunt is typically used when an extra performance segment of code needs to protect itself from a likely error. An invalid address while following a control block chain is an example of an error that activates a shunt routine.

A shunt is usually established for short periods of time while the library routines or debug tools are providing services to the application. Language Environment establishes an ESTAE error recovery routine for program interrupts and abends. Shunt routines do not return to the Language Environment condition manager. There is no return code from the shunt routine.

Usage Notes:

1. R15 is set to the address of the shunt routine upon entry to the shunt routine for a resume into non-XPLINK code. For shunts activated in XPLINK routines there is no specific register set to the shunt address when the shunt routine receives control.
2. R0 through R14 have the same value when the shunt routine gains control as they did when the program check occurred. For shunts active in XPLINK routines, R15 is also set to its contents at the time of the interrupt for the resume.
3. The shunt routine cannot assume that the range of the base registers used at the time that the program check occurred extends to the shunt routine. The shunt routine might need to re-establish addressability upon entry.
4. The CEECAADMC field should be cleared as soon as it is no longer needed.

5. A shunt routine should never span a call statement. A shunt routine that gains control with another program's registers will usually fail on the first branch attempt. The routine that is called does not have to save the address of your shunt routine.

   Note: The Language Environment condition manager clears the CEECAADMC field when the program interrupt shunt routine is called.

Establishing a Program Interrupt Shunt Service

A program interrupt shunt routine is established by setting its address in the CAA (CEECAADMC). When the shunt address gains control, the AMODE is the AMODE at the time of the program interrupt. Setting an address in the CEECAADMC effectively cancels the previously established shunt routine, if any. Only one shunt routine can be in effect at a time. Language Environment does not provide any facility for stacking the shunt addresses. A save is not needed prior to establishing your own shunt routine.

The shunt routine is removed by removing its address from the CEECAADMC. A value of zero should be assigned to CEECAADMC as soon as possible. A shunt routine should be removed as soon as it is not needed. Information about the error is provided to the shunt routine through the CEECAAPRGCK field in the CAA, which is set to the value of the program interrupt code.

Abend Shunt Routine

After an abend occurs that is shunted, the following external fields of the CAA will contain information about the abend. This information is taken from fields of the SDWA associated with the shunted abend. The SDWA does not exist after the shunt routine is given control.

CEECAAAB_GR0_VALID	A bit indicating, if on, that the CEECAAAB_GR0 field contains valid data about the last abend.
CEECAAAB_GR0	Register 0 contents at the time of the abend. This is only valid if the CEECAAAB_GR0_VALID bit is on.
CEECAAAB_ICD1_VALID	A bit indicating, if on, that the CEECAAAB_ICD1 field contains valid data about the last abend.
CEECAAAB_ICD1	The eight bit interrupt code from SDWAICD1 field of the SDWA for the abend. This is only valid if the CEECAAAB_ICD1_VALID bit is on.
CEECAAAB_ABCC_VALID	A bit indicating, if on that the CEECAAAB_ABCC field contains valid data about the last abend.
CEECAAAB_ABCC	The abend completion code, taken from SDWAABCC field of the SDWA for the shunted abend. This is only valid if the CEECAAAB_ABCC_VALID bit is on.
CEECAAAB_CRC_VALID	If on, this bit indicates that the CEECAAAB_CRC field contains valid data about the last abend.
CEECAAAB_CRC	Component reason code, or return code associated with the abend, taken from the SDWACRC field of the SDWA for the shunted abend. This is only valid if the CEECAAAB_CRC_VALID bit is on.
CEECAAAB_GR15_VALID	A bit indicating, if on, that the CEECAAAB_GR15 field contains valid data about the last abend.
CEECAAAB_GR15	Register 15 contents at the time of the abend. This field is only valid if the CEECAAAB_GR15_VALID bit is on.

Attention Handling

When the run-time option INTERRUPT(ON) is specified, the Language Environment condition manager issues a STAX macro which requests attention interrupts to be directed to a STAX exit.

In the CAA at offset X'120', label CEECAAATTN, is initially set to the address of a routine that runs a BR 14.

If an attention interrupt occurs and the STAX exit is entered, the STAX exit changes the address of the routine at CEECAAATTN to a routine that issues a CALL CEESGL raising the ATTENTION condition.

Polling code is contained in both library- and compiler-generated code and is the following code sequence; there is no parameter for this routine and R1 is not used:

```
L    15,CEECAAATTN
BALR 14,15
```

When polling code calls the routine that calls CEESGL, the attention condition is raised. Condition handling proceeds with the defined sequence of condition handling events, as if a synchronous condition were raised.

Other Language Environment Condition Manager Topics

For information about Language Environment default condition handling, see *z/OS Language Environment Programming Guide*. For information about Language Environment run-time options, see *z/OS Language Environment Programming Reference*.

Language Environment Condition Information Block

Each condition is represented by a Condition Information Block (CIB). The CIB is built by the condition manager and is used as an information repository for data required by the condition handling facilities. The CIB is not presented to user condition handlers and is available only to member condition handlers. The CIB is not intended to be viewed or altered by the user. The complete CIB is listed in the *z/OS Language Environment Debugging Guide* book.

Errors During Condition Handling

Every effort should be made to ensure that further exceptions do not occur during the condition handler process. However, errors may still occur.

To identify the state (or point in time) of the Language Environment condition manager, a state setting is contained in the CIB. The valid states, constant values, and actions taken by the Language Environment condition manager are listed in Table 25 on page 265.

When a language-specific exception handler determines that it is safe to incur a nested condition, it should alter the CEECIB state variable to indicate nested conditions are tolerated (cib_state_recursion).

Table 25. CEECIB State Variable, Constant Values, and Associated Actions

State Value	Value	Variable Meaning	Condition Manager Actions with Nested Condition
cib_state_enable	1	The language-specific enablement handler is in control. This is set by the Language Environment condition manager.	Terminate the enclave via abend 4087-1.
cib_state_hdl	2	A user condition handler, registered via CEEHDLR, is in control. This is set by the Language Environment condition manager.	Terminate the enclave via abend 4087-2.
cib_state_memb	3	A language-specific exception handler is in control. This is set by the Language Environment condition manager.	Terminate the enclave via abend 4087-3.
cib_state_SF0	4	A language-specific exception handler is in control for stack frame zero. This is set by the Language Environment condition manager.	Terminate the enclave via abend 4087-4.
cib_state_evnt	5	A language-specific exception handler is in control for incidental service. This is set by the Language Environment condition manager.	Terminate the enclave via abend 4087-5.
cib_state_ipat	6	The debug tool is in control. This is set by the Language Environment condition manager.	Call the debug tool event handler indicating this event, then terminate the enclave via abend 4087-6.
cib_state_msg	7	Language Environment message services are being called by the Language Environment condition manager; this is set by the Language Environment condition manager.	Terminate the enclave via abend 4087-7.
cib_state_dump	8	Used when traceback or dump services are being called.	Terminate the enclave via abend 4087-8.
cib_state_Memb_AR_MODE	9	Used for member processing when recursion is allowed.	While in this state, the Language Environment condition manager tolerates the occurrence of a nested condition.
cib_state_ab_term_exit	10	Used when an abnormal termination exit is called; the cib_state_ab_term_exit variable contains the name of the exit.	Terminate the enclave via abend 4087-A.
cib_state_recursion	100	A language-specific user handler is in control, such as a PL/I On Unit. This value is set by the language-specific exception handler. While in this state, the Language Environment condition manager tolerates the occurrence of a nested condition. This is set by subordinate condition handlers and debug tools when calling user code.	Tolerate nested conditions.

HLL Conventions and Information

In order to work in concert with each other, the HLL condition handlers must adhere to a set of conventions. Also, some extensions to the current HLL error handling schemes are required so that the condition handling model is complete. By doing so, a consistent, cooperative view of the condition handling model is produced. This section lists these conventions and requirements on the HLLs, as well as some additional information provided to aid the HLL writer.

HLL Condition Handling Conventions

The HLL condition handling models basically fall into two categories: the stack frame-based model (PL/I), and the Global Error Table (GET) model (FORTRAN). To ensure a consistent view of condition handling in a multi-language thread that can involve both models, cooperation is required among the HLL condition handlers. The conventions for the HLL condition handling are:

- A stack frame is defined as a register save area that is back chained in the logical invocation stack.
- All HLL condition handlers must percolate all unknown conditions. An unknown condition is one for which the HLL has no defined action.
- When an HLL condition handler is called for enablement, unknown conditions must be enabled.
- All (enabled) conditions of severity 0 or 1 must permit a resume at the next sequential instruction without requiring any fix-up. If needed, any critical fix-up can be performed at enablement by the member deciding that the condition was enabled.
- When the action for a given condition is “ignore”, the condition is considered to be **disabled** and the HLL condition handler must return **not enabled** when it is called for enablement.
- Some hardware conditions can be detected through software prior to raising the hardware condition. For example, the software can check for the **ZeroDivide** condition by checking for a zero divisor. If a condition is defined to be enabled by the HLL, and software detects a potential hardware condition, then the equivalent Language Environment condition must be signaled using CEESGL.
- Despite the above, statement-oriented language constructs are most appropriately handled directly in the HLL. Any corresponding condition is defined to be disabled. For example, the ON SIZE clause of a COBOL DIVIDE verb (which includes the logical equivalent of the **ZeroDivide** condition) can be handled by COBOL without ever raising a condition.
- For HLLs that employ the GET model, some conventions must be followed so that in a multi-language application that contains both the GET model HLL and the stack frame based model HLL the two models can work in concert. These conventions are:
  - For enabled conditions, the actions defined in the G.E.T. are divided into two groups:
    1. Fix-up and resume
    2. Other than fix-up and resume

    If the default action is fix-up and resume, then that action must be taken at the owning stack frame.
  - If a user explicitly alters the action that needs to be taken for a particular condition within the GET (for example, registering his own handler to field the condition instead of taking the default action), the user-specified action must be honored.

If the user changes the number of messages that are displayed for a particular condition, then the system action is still enforced at the zeroth stack frame.

– If the condition is presented to a stack frame other than the owning stack frame (implying that the condition occurred in a non-GET language) or if the default action is something other than fix-up and resume, then the HLL condition handler must percolate the condition. Specifically, any existing GET actions that specify termination *must* be changed to percolation. These rules allow current semantics to be followed, but also permit inter-language cooperation.

– If the HLL condition handler for the GET model is called for the zeroth stack frame, the “true” system action must be enforced at this time.

- If a HLL condition handling routine needs to permit nested conditions, and thus would be recursively entered, they must set the state variable in the CIB to *cib_state_recursion*.
- Those HLLs that employ a GET must provide a mechanism to allow a condition to be percolated. Users must be able to specify the percolation action.

HLL Condition Handling Information

The following list provides some information and suggestions intended to be helpful to implementers of HLLs:

- Language Environment math library routines that are called as an intrinsic in a given HLL must behave as if the logic within the math service had been generated in-line by the compiler. That is, the characteristics of the HLL are inherited by the Language Environment math service.
- Some conditions are considered to be HLL-specific. For example, I/O related conditions are currently HLL-specific. Other HLL-specific conditions include the AREA, CONDITION, and SIZE conditions in PL/I (PL/I examples are included in this section for illustrative purposes).
- Enablement is performed for *all* conditions regardless of the origin, hardware or software (CEESGL, for instance).
- Enablement allows the HLL to enforce constructs such as PL/I’s prefix conditions and COBOL’s ON SIZE clause. (COBOL can generate in-line code to check for this and honor the ON SIZE without ever signaling a condition.)
- The HLLs should use the severity that is contained within the condition representation to advantage. For example, PL/I could signal the PL/I ENDPAGE condition at severity 1. If no handler acted on the condition, Language Environment would take the default action for unhandled severity 1 conditions (in the absence of a feedback token), which is to resume at the next sequential instruction following the signal.

Language Environment-Issued Abends

Language Environment issues abends for some fatal errors. For these errors, the Language Environment exception manager terminates the process without the subordinate exception handlers being called. Note that all enclaves within the process are terminated.

While executing under CICS, the abend code is the 4-character EBCDIC representation of the abend codes; the reason code is not provided. Reason codes are only included in the CEE100 messages that are issued to the console. In this case, the abend code and the reason code are provided in hexadecimal notation. Reason codes are zero unless stated otherwise.

Condition Management

Language Environment issues user abends with codes of 4000 and above. When Language Environment issues an abend, the normal condition processing does not occur. Language Environment percolates the abend if the abend drives Language Environment's ESTAE exit. User abends of 4000 and above that are not issued by Language Environment are **not** percolated.

The products running under Language Environment should be aware that abend codes that are 4000 through 4095 are reserved for Language Environment use. These abend codes are used by Language Environment and possibly the members to signify that the environment is no longer usable.

In general, other abend codes are intercepted by the Language Environment exception manager. These produce messages and possibly dumps. The philosophy of the Language Environment exception manager is to provide diagnostic messages and not abend.

Chapter 8. Program Management

This section describes the functions supported by the Language Environment program manager and how to invoke them. The Language Environment program manager utilizes current underlying system support for load and delete services. The Language Environment program manager is responsible for:

- Loading and deleting of routines
- Managing quick access to library subroutines through library vector tables (LIBVECs)

It should be noted that fetches and dynamic calls remain the responsibility of individual high level languages (HLLs). The HLLs can use the load and delete services of Language Environment to physically load and delete subroutines, but the actual management of routines is up to the HLLs.

Loading and Deleting Programs

This section describes load module name support, search order for the loading and deleting of library subroutines, and the interface to load and delete services.

MVS Environment

Under MVS, the search order can be specified on the interface to the CEEPLOD2 service. The CEEPLOD2 service allows the CWI writer to specify the search order in the following:

- Search data sets only
- Search the HFS only
- First search data sets, if not found then search the HFS
- First search the HFS, if not found then search data sets

The name specified on a load request can affect the search order. The following rules apply to the name and search order:

- If the single slash ('/') character is anywhere in the name and is not covered by the rules below, then search the HFS only.
- If the characters ('./') are the first 2 characters in the name, then search the HFS only.
- If the characters ('//') are the first 2 characters, then search data sets only. The first 2 characters are then deleted from the name that is passed to the operating system.

When searching data sets, the name is always folded to uppercase. When going to the HFS, the name is passed "as is".

When a MVS module search is performed and the RTLS(OFF) run-time option is specified, the load macro is issued and the usual program search order prevails. When RTLS(ON) is specified, the RTLS logical library is first searched for the requested module. If the module is not found, a load macro is issued and the usual program search order is used. When searching for the executable module in the HFS, then the BPX1LOD service is used.

CICS Environment

Language Environment uses the EXEC CICS load services.

© Copyright IBM Corp. 1991, 2002

z/OS UNIX System Services Environment

Under CICS, loading from the hierarchical file system is not supported.

CWI to Program Management Process Services

This section describes the interface to the process level load and delete services provided by program management for other Language Environment library routines and the HLLs library routines. AMODE switching is not performed for the process level load and delete services.

CEEZLOD — Process Load Service

Syntax

void CEEZLOD (*name, name_len, rsvd, epoint, rc*)

```
POINTER   *name;
INT4      *name_len;
INT4      *rsvd;
POINTER   *epoint;
INT4      *rc;
```

CEEZLOD

Call the process load service CWI interface as follows:

```
L    R15,CEECAAPCB-CEECAA(,R12)       Get address of PCB
L    R15,CEEPCB_ZLOD-CEECPCB(,R15)    Get address of CEL subroutine
BALR R14,R15                          Invoke process load
```

name **(input)**
The address of the name to load.

name_len **(input)**
The length of the name, in bytes, to load.

rsvd **(input)**
A reserved field that must be zero.

epoint **(output)**
The address of the entry point returned as a result of the load.

rc **(output)**
A return code indicating the success of the service. This was chosen over feedback codes because message services are not yet available during process level initialization. The return codes are defined as follows:

00 Successful load
08 Module not found
12 Not enough storage to load
16 Unsuccessful load

Usage Notes:

1. This service is used to load routines that are maintained in storage across enclaves.
2. The address of CEEZLOD is held in CEEPCB_ZLOD.
3. It is the user's responsibility to delete routines loaded by this service.

CEEZDEL — Process Delete Service

Syntax

void CEEZDEL (*name, name_len, rsvd, rc*)

```
POINTER   *name;
INT4      *name_len;
INT4      *rsvd;
INT4      *rc;
```

CEEZDEL

Call the process delete service CWI interface as follows:

```
L    R15,CEECAAPCB-CEECAA(,R12)       Get address of PCB
L    R15,CEEPCB_ZDEL-CEECPCB(,R15)    Get address of CEL subroutine
BALR R14,R15                          Invoke process delete
```

name **(input)**

The address of the name to delete.

name_len **(input)**

The length of the name, in bytes, to delete.

rsvd **(input)**

A reserved field that must be zero.

rc **(output)**

A return code indicating the success of the service. This was chosen over feedback codes because message services are not yet available during process level initialization. The return codes are defined as follows:

00 Successful delete

04 Unsuccessful delete

Usage Notes:

1. This service is used to delete routines that were loaded by CEEZLOD.
2. The address of CEEZDEL is held in CEEPCB_ZDEL.
3. It is the user's responsibility to delete routines loaded by CEEZLOD.

CWI to Program Management Region Services

This section describes the interface to the region level load and delete services provided by program management for other Language Environment library routines and the HLLs library routines. AMODE switching is not performed for the region level load and delete services.

CEEZLODR — Region Load Service

Syntax

void CEEZLODR (*name, name_len, rsvd, epoint, rc*)

```
POINTER   *name;
INT4      *name_len;
INT4      *rsvd;
POINTER   *epoint;
INT4      *rc;
```

CEEZLODR

Call the region load service CWI interface as follows:

```
L    R15,CEECAARCB-CEECAA(,R12)       Get address of RCB
L    R15,CEERCB_ZLOD-CEECRCB(,R15)    Get address of CEL subroutine
BALR R14,R15                          Invoke region load
```

name **(input)**
The address of the name to load.

name_len **(input)**
The length of the name, in bytes, to load.

rsvd **(input)**
A reserved field that must be zero.

epoint **(output)**
The address of the entry point returned as a result of the load.

rc **(output)**
A return code indicating the success of the service. This was chosen over feedback codes because message services are not yet available during process level initialization. The return codes are defined as follows:

00 Successful load
08 Module not found
12 Not enough storage to load
16 Unsuccessful load

Usage Notes:

1. This service is used to load routines that are maintained in storage across processes.
2. The address of CEEZLODR is held in CEERCB_ZLOD.
3. It is the user's responsibility to delete routines loaded by this service.
4. On CICS, when a region level load is requested, the HOLD option is specified when the CICS LOAD command is performed.

CEEZDELR — Region Delete Service

Syntax

void CEEZDELR (*name, name_len, rsvd, rc*)

```
POINTER   *name;
INT4      *name_len;
INT4      *rsvd;
INT4      *rc;
```

CEEZDELR
Call the region delete service CWI interface as follows:

```
L    R15,CEECAARCB-CEECAA(,R12)       Get address of RCB
L    R15,CEERCB_ZDEL-CEECRCB(,R15)    Get address of CEL subroutine
BALR R14,R15                          Invoke region delete
```

name **(input)**
The address of the name to delete.

name_len **(input)**
The length of the name, in bytes, to delete.

rsvd **(input)**
A reserved field that must be zero.

rc **(output)**
A return code indicating the success of the service. This was chosen over

feedback codes because message services are not yet available during process level initialization. The return codes are defined as follows:

00 Successful delete
08 Unsuccessful delete

Usage Notes:

1. This service is used to delete routines that were loaded by CEEZLODR.
2. The address of CEEZDELR is held in CEERCB_ZDEL.
3. It is the user's responsibility to delete routines loaded by CEEZLODR.

CWI to Program Management Enclave Services

This section describes the interface to the enclave load and delete services provided by program management for other Language Environment library routines and the HLLs library routines. The load/delete services are accessed through LIBVEC.

CEEPLOD — Enclave Level Load Service

The CEEPLOD CWI callable service loads the named routine into storage. It uses system services depending on the environment; MVS, z/OS UNIX, or CICS. For a discussion of the search orders for the various host systems, see "Loading and Deleting Programs" on page 269.

Syntax

void (*CEECELVPLOD) (*name_len, name, address, mod_size, [fc]*)

```
INT4    *name_len;
CHAR8   *name;
POINTER *address;
INT4    *mod_size;
FEEDBACK *fc;
```

CEECELVPLOD

A field in the Language Environment LIBVEC that points to the Program Load CWI.

Call this CWI interface as follows:

```
L     R15,CEECAACELV-CEECAA(,R12)     CAA address is in R12
L     R15,0096(,R15)
BALR  R14,R15
```

name_len **(input)**

The number of bytes of the routine name to be loaded.

name **(input)**

The name of the routine to load into storage.

address **(output)**

The address of the entry point returned as a result of the load.

mod_size **(output)**

The number of bytes occupied by the newly-loaded load module. If the size cannot be determined, a zero is returned.

Note: When a module is loaded from the RTLS logical library, the module length is returned, even when it exceeds 16M bytes.

fc **(output/optional)**
A parameter which contains the condition token. The possible conditions are:

CEE000	Severity	0
	Msg_No	N/A
	Message	The service completed successfully.
CEE3DC	Severity	3
	Msg_No	3500
	Message	Not enough storage available to load *[module_name]*
CEE3DD	Severity	3
	Msg_No	3501
	Message	*[module_name]* module not found.
CEE3DE	Severity	3
	Msg_No	3502
	Message	*[module_name]* module name too long.
CEE3DF	Severity	3
	Msg_No	3503
	Message	Load service request for module *[module_name]* was unsuccessful.
CEE3EJ	Severity	3
	Msg_No	3539
	Message	The load request for program object *[module_name]* was unsuccessful for the current level of CICS.
CEE3EK	Severity	3
	Msg_No	3540
	Message	The load request for program object *[module_name]* was unsuccessful.

Usage Notes:

1. Language Environment maintains a list of all modules loaded by the low-level load service. This list is maintained so that Language Environment can delete all the modules it loaded with the low-level load service during the life of the enclave.
2. The user must issue a corresponding low-level delete service for each load service request.
3. The search order for the module is system dependent. For details, see “Loading and Deleting Programs” on page 269.
4. The CEEPLOD service does not support loading program objects with deferred load classes; for example, CEEPLOD does not support a reentrant C program that was built with using the Pre-linker utility. The CEEPLOD2 CWI should be used instead.

CEEPLOD2 — Enclave Level Load Service

The CEEPLOD2 CWI callable service loads an executable module into storage. The underlying environment (MVS, z/OS UNIX, CICS) system services are used. For a discussion of the search orders for the various host systems, see “Loading and Deleting Programs” on page 269. This service can be used to request loads at the thread or enclave level.

Syntax

void CEEPLOD2 (*name_length, name, flag, token, entry_point_address, [fc]*)

```
INT4        *name_length;
CHAR        *name;
INT4        *flag;
INT4        *token;
POINTER     *entry_point_address;
FEED_BACK   *fc;
```

CEEPLOD2

Call this CWI interface as follows:

```
L       R15,CEECAACELV-CEECAA(,R12)       CAA address is in R12
L       R15,F6C(,R15)
BALR    R14,R15
```

name_length **(input)**

Specifies the name of a fullword containing the length of the name of file (program) to be loaded. The length can be up to 1023 bytes.

name **(input)**

Specifies the name of a field of length *name_length* containing the name of the file (program) to be loaded. The file name can be up to 1023 characters long, and does not require a terminating null character.

flag **(input)**

A fullword binary value indicating the load search order and the service level (enclave/thread) request. The following bits are defined:

0-17 reserved

18-23 flag_search

The value indicates the search order for the load request. The values are defined as follows:

0 Data sets only
1 HFS only
2 Data sets then HFS
3 HFS then data sets

24-31 flag_level

The value indicates if this load request is to be done at the enclave or thread level. The values are defined as follows:

0 thread
1 enclave

token **(output)**

A 32-bit field of information that is returned. This token must be passed to the query/delete service.

entry_point_address **(output)**

The address of the entry point returned as a result of the load.

fc **(output/optional)**

Specifies the optional feedback token where the CWI feedback code will be placed. If this argument is omitted and the CWI will return a feedback code other than **CEE000**, the CWI will 'raise' this feedback code as an error condition. The following conditions can result from this CWI service.

CEE000	Severity	0
	Msg_No	0000
	Message	The service completed successfully.
CEE3D0	Severity	3
	Msg_No	3512
	Message	An HFS load of module *module name* failed. The system return code was [*return_code*]; the reason code was [*reason_code*].
CEE3DC	Severity	3
	Msg_No	3500
	Message	Not enough storage available to load [*name*].
CEE3DD	Severity	3
	Msg_No	3501
	Message	[*name*] module not found.
CEE3DE	Severity	3
	Msg_No	3502
	Message	[name] module name to long.
CEE3DF	Severity	3
	Msg_No	3503
	Message	Load service request for module [*name*] was unsuccessful.
CEE3EJ	Severity	3
	Msg_No	3539
	Message	The load request for program object *[module_name]* was unsuccessful for the current level of CICS.

Usage Notes:

1. Language Environment maintains a list of all modules loaded by this load service. This list is maintained so that Language Environment can delete all the modules it loaded using this load service during the life of the enclave or thread.
2. If more than one load is issued for a reentrant module, multiple loads are not performed. For the first load request, the module is brought into storage. If any subsequent load requests are made for that module, its address is returned and a use count is maintained for it.
3. The user must issue a corresponding delete service for each load service request.
4. The search order for the module is system dependent. For details, see “Loading and Deleting Programs” on page 269.
5. If the file name does not follow the name rules, see “MVS Environment” on page 269, and the search order requests load from the HFS, then a *getenv()* is done for the ’LIBPATH’ environment variable. If the variable exists, it is passed to the BPX1LOD service as the path name and BPX1LOD would proceed to search for the requested file name in each of the directories specified in the LIBPATH. If LIBPATH does not exist, then it is assumed the path is the current working directory, unless the path name to load already contains a slash, then the LIBPATH is ignored.

CEEPDEL — Enclave Level Delete Service

The CEEPDEL CWI callable service deletes the specified routine. The underlying host services are used to delete the routine.

Syntax

void (*CEECELVPDEL) (*name_len, name, [fc]*)

```
INT4    *name_len;
CHAR8   *name;
FEEDBACK *fc;
```

CEECELVPDEL

A field in the Language Environment LIBVEC that points to the program delete CWI.

Call this CWI interface as follows:

```
L     R15,CEECAACELV-CEECAA(,R12)     CAA address is in R12
L     R15,0084(,R15)
BALR  R14,R15
```

name_len **(input)**

The number of bytes of the following load module name.

name **(input)**

The name of the routine to be deleted.

fc **(output)**

A parameter which contains the condition token. The possible conditions are:

CEE000	Severity	0
	Msg_No	N/A
	Message	The service completed successfully.
CEE3DG	Severity	3
	Msg_No	3504
	Message	Delete service request for module [*module_name*] was unsuccessful.

Usage Notes:

1. Language Environment maintains a list of all modules loaded by the low-level load service. This list is maintained so that Language Environment can delete all modules it loaded with the low-level load service during the life of the environment.
2. If more than one load is issued for a module, multiple loads are not performed. For the first load request, the module is brought into storage. If any subsequent load requests are made for that module, its address is returned and a use count is maintained for it.
3. If a delete request is made, the use count decrements and, when it reaches zero, the module is deleted from virtual storage.
4. It should be noted that calling a deleted entry point is an error and causes unpredictable results.

CEEPDEL2 — Enclave Level Delete Service

The CEEPDEL2 CWI will delete an executable module that was requested by the CEEPLOD2 load service.

Syntax

void CEEPDEL2 (*token, [fc]*)

```
INT4        *token;
FEED_BACK   *fc;
```

CEEPDEL2

Call this CWI interface as follows:

```
L       R15,CEECAACELV-CEECAA(,R12)       CAA address is in R12
L       R15,F70(,R15)
BALR    R14,R15
```

token **(input)**

A 32-bit field of information that is returned from the load request.

fc **(output/optional)**

Specifies the optional feedback token where the CWI feedback code will be placed. If this argument is omitted and the CWI will return a feedback code other than **CEE000**, the CWI will "raise" this feedback code as an error condition.

The following message identifiers and associated severities may be returned by the service in the feedback code *fc*.

CEE000	Severity	0
	Msg_No	0000
	Message	The service completed successfully.
CEE516	Severity	3
	Msg_No	5158
	Message	The z/OS UNIX callable service, BPX1DEL was unsuccessful. The system return code was [*return_code*], the reason code was [*reason_code*].

Qualifying Data (when CEE516):

No.	Name	Input/ Output	Type	Value
1	*parm_count*	input	INT4	3
2	*return_code*	input	INT4	return code from kernel, BPX1DEL function **nn** codes defined by z/OS UNIX
3	*reason_code*	input	INT4	reason code from kernel, BPX1LOD function **nn** codes defined by z/OS UNIX

Usage Note: The use count is decremented and, when it reaches zero, the module is deleted from virtual storage. It should be noted that calling a deleted entry point is an error and causes unpredictable results.

CEEPQLD — Return Information about Loaded Module

The CEEPQLD CWI will return information about an executable module that was loaded by the CEEPLOD2 load service. The following information is returned:

- name length
- name
- load point address
- entry point address
- executable module size in bytes

Syntax

void CEEPQLD (*token, name_len, name, load_point_address, entry_point_address, module_size, [fc]*)

```
INT4        *token;
INT4        *name_length;
CHAR        *name;
POINTER     *load_point_address;
POINTER     *entry_point_address;
INT4        *module_size;
FEED_BACK   *fc;
```

CEEPQLD

Call this CWI interface as follows:

```
L       R15,CEECAACELV-CEECAA(,R12)       CAA address is in R12
L       R15,F74(,R15)
BALR    R14,R15
```

token **(input)**
A 32-bit field of information that was returned on the load request.

name_length **(output)**
Specifies the name of a fullword containing the length of the name of file (program) to be queried. The length can be up to 1023 bytes long.

name **(output)**
Specifies the name of a field of length *name_length* containing the name of the file (program) to be queried. The file name can be up to 1023 characters long, and does not require a terminating null character.

load_point_address **(output)**
The address of the load point returned as a result of the load.

entry_point_address **(output)**
The address of the entry point returned as a result of the load.

module_size **(output)**
The module size in bytes of the executable module.

fc **(output/optional)**
Specifies the optional feedback token where the CWI feedback code will be placed. If this argument is omitted and the CWI will return a feedback code other than **CEE000**, the CWI will “raise” this feedback code as an error condition.

The following message identifiers and associated severities may be returned by the service in the feedback code *fc*.

CEE000	Severity	0
	Msg_No	0000
	Message	The service completed successfully.
CEE519	Severity	3
	Msg_No	5159
	Message	The token [*token*] was invalid.

Usage Note: This service returns information about the executable module that was loaded by the CEEPLOD2 load service.

CEEPCB_DELETE — System Dependent Delete Service

The system dependent delete service is either a delete service for MVS, CICS or a delete service provided by the user service routines in a pre-initialized environment.

Syntax

void CEEPCB_DELETE (*name_addr, name_length, user_word, load_point, return_code, reason_code*)

```
POINTER     *name_addr;
INT4        *name_length;
INT4        *user_word;
INT4        *rsvd_word;
INT4        *return_code;
INT4        *reason_code;
```

CEEPCB_DELETE

Call this CWI interface as follows:

```
L       R15,CEECAAPCB-CEECAA(,R12)
L       R15,CEEPCB_DELETE-CEEPCB(,R15)   System dependent delete
BALR    R14,R15
```

name_addr **(input)**
Fullword Address of the name of module to delete.

name_length **(input)**
Fixed Binary(31) length of module name.

user_word **(input)**
A fullword user field.

rsvd_word **(input)**
A fullword address reserved for future use (input parameter); must be zero.

return code **(output)**
Fullword return code from load.

reason code **(output)**
Fullword reason code from load. The return and reason codes have the following values:

Return Code	Reason Code	Meaning
0	0	Successful
8	4	Unsuccessful; delete failed
16	4	Unsuccessful — uncorrectable error occurred

CEEPCB_LOAD — System Dependent Load Service

The system dependent load service is either a load service for MVS, CICS or a load service provided by the user service routines in a pre-initialized environment.

Syntax

void CEEPCB_LOAD (*name_addr, name_length, user_word, load_point, entry_point, module_size, return_code, reason_code*)

```
POINTER     *name_addr;
INT4        *name_length;
INT4        *user_word;
POINTER     *load_point;
POINTER     *entry_point;
INT4        *module_size;
INT4        *return_code;
INT4        *reason_code;
```

CEEPCB_LOAD

Call this CWI interface as follows:

```
L       R15,CEECAAPCB-CEECAA(,R12)
L       R15,296(,R15)   System dependent load
BALR    R14,R15
```

name_addr **(input)**
Fullword Address of the name of module to load.

name_length **(input)**
Fixed Binary(31) length of module name.

user_word **(input)**
A fullword user field.

load_point **(input/output)**
Fullword address to load point address of the loaded routine. If zero on output, then load point address was not available.

entry_point **(output)**
Fullword entry point address of the loaded routine.

module_size **(output)**
Fixed Binary(31) size of module that was loaded.

return code **(output)**
Fullword return code from load.

reason code **(output)**
Fullword reason code from load. The return and reason codes have the following values:

Return Code	Reason Code	Meaning
0	0	Successful
0	12	Successful; loaded via SVC 8
0	5	Successful; loaded via RTLS
4	4	Unsuccessful; module loaded above the 16 megabyte line when in AMODE(24)
8	4	Unsuccessful; load failed
16	4	Unsuccessful; uncorrectable error occurred

CEEPLODT — Thread Level Load Service

The CEEPLODT CWI callable service loads the named routine into storage. Underlying host system services are used. For a discussion of the search orders for the various host systems, see “Loading and Deleting Programs” on page 269.

Syntax

void (*CEECELVPLODT) (*name_len, name, address, mod_size, [fc]*)

```
INT4    *name_len;
CHAR8   *name;
POINTER *address;
INT4    *mod_size;
FEEDBACK *fc;
```

CEECELVPLODT

A field in the Language Environment LIBVEC that points to the thread-level Program Load CWI.

Call this CWI interface as follows:

```
L     R15,CEECAACELV-CEECAA(,R12)     CAA address is in R12
L     R15,3492(,R15)
BALR  R14,R15
```

name_len **(input)**

The number of bytes of the routine name to be loaded.

name **(input)**

The name of the routine to load into storage.

address **(output)**

The address of the entry point to the loaded module.

mod_size **(output)**

The number of bytes occupied by the newly-loaded load module. If the size cannot be determined, a zero is returned.

fc **(output/optional)**

A parameter which contains the condition token; possible conditions are:

CEE000	Severity	0
	Msg_No	N/A
	Message	The service completed successfully.
CEE3DC	Severity	3
	Msg_No	3500
	Message	Not enough storage available to load *[module_name]*.
CEE3DD	Severity	3
	Msg_No	3501
	Message	*[module_name]* module not found.
CEE3DE	Severity	3
	Msg_No	3502
	Message	*[module_name]* module name too long.

CEE3DF	Severity	3
	Msg_No	3503
	Message	Load service request for module *[module_name]* was unsuccessful.
CEE3EJ	Severity	3
	Msg_No	3539
	Message	The load request for program object *[module_name]* was unsuccessful for the current level of CICS.
CEE3EK	Severity	3
	Msg_No	3540
	Message	The load request for program object *[module_name]* was unsuccessful.

Usage Notes:

1. Language Environment maintains a list of all modules loaded by the thread-level load service but as yet not deleted. This list is maintained so that Language Environment can delete all as not yet deleted modules it loaded with the thread-level load service during the life of the thread when the thread terminates.
2. The user can issue a corresponding thread-level delete service request for each thread load service request.
3. This service can be used in all environments, MVS, CICS, pre-initialization, multi-threaded and non-multi-threaded.
4. Each call to the service will result in a load system request. The operating system determines whether to load another copy or just return a pointer to another copy already in storage.
5. The search order for the module is system dependent; see “Loading and Deleting Programs” on page 269 for details.
6. The CEEPLODT service does not support the loading of program objects with deferred load classes. For example, CEEPLODT will not support a reentrant C program that was built without using the Pre-linker utility. The CEEPLOD2 CWI should be used instead.

CEEPDELT – Thread Level Delete Service

The CEEPDELT CWI callable service deletes the specified routine. Underlying host services are used to delete the routine.

Syntax

void (*CEECELVPDELT) (*name_len, name, [fc]*)

```
INT4    *name_len;
CHAR8   *name;
FEEDBACK *fc;
```

CEECELVPDELT

A field in the Language Environment LIBVEC that points to the thread-level program delete CWI.

Call this CWI interface as follows:

```
L     R15,CEECAACELV-CEECAA(,R12)     CAA address is in R12
L     R15,3496(,R15)
BALR  R14,R15
```

name_len **(input)**
The number of bytes of the following load module name.

name **(input)**
The name of the routine to be deleted.

fc **(output/optional)**
A parameter which contains the condition token. The possible conditions are:

CEE000	Severity	0
	Msg_No	N/A
	Message	The service completed successfully.
CEE3DG	Severity	3
	Msg_No	3504
	Message	Delete service request for module *[module_name]* was unsuccessful.

Usage Notes:

1. Language Environment maintains a list of all modules loaded by the thread-level load service but as yet not deleted. This list is maintained so that Language Environment can delete all as not yet deleted modules it loaded with the thread-level load service during the life of the thread when the thread terminates.
2. If the load module name is not in the list of modules, the request completes with a feedback code of CEE000 and no delete is done.
3. A thread may issue a thread-level delete only for modules for which it issued the thread-level load.

Library Subroutine Access

Library subroutines can be accessed from compiler-generated code, user-written assembly language code, and other subroutines. The following items support these methods of access:

- A specially designed vector table called a LIBVEC
- A LIBVEC descriptor (a CSECT stored within the owner's library)
- Routines to build a LIBVEC and to load and delete library routines

These methods of access include: dynamic load, LIBPACKs, and AMODE switching that is transparent to both the caller and called subroutine.

The sections that follow describe the following items:

- LIBVECs
- LIBPACKS
- LIBVEC descriptors
- LIBVEC initialization
- CWI to LIBVEC low-level services
- Other LIBVEC functions

LIBVECs

A LIBVEC is provided for Language Environment's library routines. A pointer to it is kept in the CAA and in the EDB. Additional LIBVECs are provided for members to use for their own libraries. Members define their own LIBVEC pointer fields.

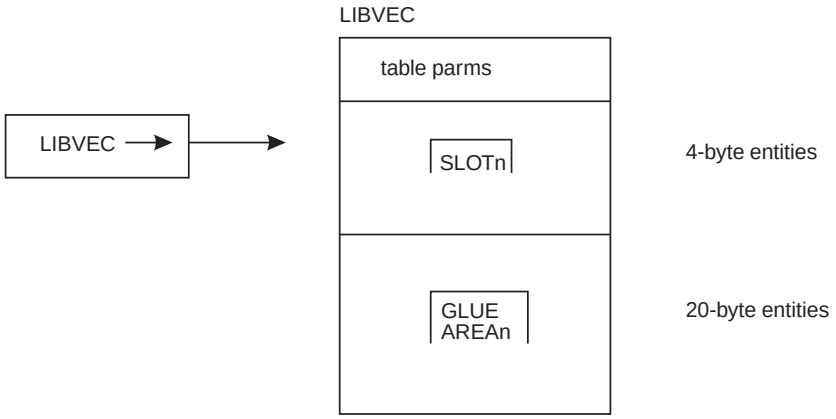

Figure 67. Library Subroutine Access Table (LIBVEC)

As Figure 67 shows, a LIBVEC has three contiguous parts. The first part is made up of fields that contain parameters relating to the table itself. The subroutine loader uses this information.

The second part is pointed to by the LIBVEC pointer and contains a 4 byte entry (SLOT*n*) at a fixed offset for each subroutine. If the subroutine has been loaded and AMODE switching is not being performed, each SLOT*n* contains the entry point address of its subroutine. Otherwise SLOT*n* points to its corresponding GLUE AREA*n* within the third part of the table.

The third part is the GLUEAREA*n*. The size of each GLUE AREA*n* is 20 bytes. If the subroutine has been loaded and AMODE switching is being performed, the corresponding GLUE AREA*n* contains AMODE switching code.

Access to library routines through LIBVEC can be *direct* (though a known fixed LIBVEC offset) or *indirectly* (through an externally-defined address constant and a library owner supplied stub). Library owners can choose to provide a macro for direct access to their library routines and a stub for indirect access.

Note: Language Environment library routines can be accessed only through a stub in compiled code; Language Environment provides stubs for this purpose. Library to library calls can access the Language Environment LIBVEC vector table directly.

The following instructions are used to access library routines through LIBVEC directly using fixed offset:

```
L     R15,libvec_pointer        Get address of LIBVEC
L     R15,xxx(,15)              Get address of Subroutine or GLUE AREAn
                                from LIBVEC slot
BALR  R14,R15
```

When the access is indirect, through a stub,

1. The calling program performs the following instruction sequence:

```
AL    15,=V(LIBSUBx)
BALR 14,15
```

2. A stub routine is provided for each library routine entry point. It is link-edited with the user program.

   There is one type of stub routine that generates the LIBVEC calling sequence. When the stub is entered from the above code, it performs the following calling sequence:

```
L     15,libvec_pointer        Get address of LIBVEC
L     15,xxx(,15)              Get address of Subroutine or GLUE AREAn
                               from LIBVEC slot
BR    15
```

3. If the subroutine has not yet been loaded, then the direct or stub branch goes to GLUE AREA*n*, which contains code to invoke the subroutine loader.
4. If the subroutine has been loaded and AMODE switching is being done, the direct or stub branch goes to GLUE AREA*n*, which contains switching code. AMODE switching is done whenever the ALL31(OFF) run-time option is in effect.
5. If the subroutine has been loaded and AMODE switching is not being done, the direct or stub branch goes directly to the subroutine's entry address.

LIBPACKs

A LIBPACK is a packaging mechanism for library packaged subroutines. Language Environment supports two types of LIBPACKs:

- An **INIT LIBPACK** is a LIBPACK loaded during LIBVEC initialization, provided it is not already link-edited with the LIBVEC descriptor (LVD) in the load module. For more information on LVDs, see "LIBPACK Relationship to the LVD". INIT LIBPACKs not link-edited with LVDs are explicitly loaded during LIBVEC initialization, as a part of the LIBVEC build process.
- A **dynamic LIBPACK** is a LIBPACK loaded upon first reference of a containing entry point.

The use of LIBPACKs improves performance by loading many library routines in one load. It eliminates directory searches for individual library routines.

HLLs using LIBVECs for their own libraries can organize LIBPACKs by RMODE, components, function, or frequency of library subroutine access.

LIBPACK Relationship to the LVD

The LVD contains a LIBPACK information section that describes the name of the LIBPACK and if it was link-edited with the LVD. It also contains LIBPACK attributes such as the type of LIBPACK (INIT or dynamic), whether to invoke an address resolver routine, and the first related entry number on a forward chain of entries contained in that particular LIBPACK.

The entries contained in a LIBPACK are forward chained in the LIBPACK and LIBVEC information section of the LVD. For a detailed description of LVDs, see "LIBVEC Descriptor (LVD)" on page 287.

LIBPACK Structure

Language Environment LIBPACKs are structured as a CSECT containing a table of WXTRNs and address constants. The dimension of the table must equal the dimension of its related LIBVEC (an entry for a particular routine must be in the same position within the table as its SLOTn is within LIBVEC). For an example LIBPACK CSECT definition, see Figure 68 on page 287.

```
CEEPLPKA  CSECT
CEEPLPKA  AMODE ANY
CEEPLPKA  RMODE ANY
          WXTRN CEEPxxx
          DC    A(CEEPxxx+X'80000000')  Routine xxxx
          WXTRN CEEPyyy
          DC    A(CEEPyyy+X'80000000')  Routine yyyy
          DC    A(0)                    This slot unused in this LIBPACK
          WXTRN CEEPzzz
          DC    A(CEEPzzz+X'80000000')  Routine zzzz
          .
          .
          END   CEEPLPKA
```

Figure 68. Partial LIBPACK CSECT Definition

The X'80000000' value is added to the address constants in the preceding figure to provide an indication to the AMODE switching code that these are AMODE(31) routines. The linkage editor does not provide this for A-type address constants.

LIBPACK Creation

A link-edit operation is required to create the Language Environment-supported LIBPACK. An INCLUDE combines the LIBPACK CSECT with library routine CSECTs to produce a load module.

HLL library routines that must exist and be preloaded during member initialization, should be packaged an INIT LIBPACK. HLLs should not allow users to tailor this LIBPACK.

Note: Language Environment does not allow tailoring of any of its LIBPACKs.

If LIBVEC owners structure the LIBPACK differently from the Language Environment-supported LIBPACK structure, they should flag the LIBPACK attribute resolve and provide an address resolver routine. For additional information, see note 5 on page 289.

LIBVEC Descriptor (LVD)

The LVD provides the entry point names and attributes of routines accessed through the LIBVEC. It also provides information about LIBPACKs associated with the LIBVEC. The LVD is provided by the LIBVEC owner. An LVD consists of 3 sections; its format Figure 69 on page 288 shows the format:

- Header information
- LIBPACK information
- LIBVEC information

```
CEEPLVD   CSECT                     LIBVEC descriptor
CEEPLVD   AMODE ANY
CEEPLVD   RMODE ANY                 Can reside anywhere in storage
*********************************************************************
*  Header Information Section                                       *
*********************************************************************
         DC    CL4'LVD '           Eyecatcher
         DC    HL2'n'              Number of LIBPACKs
         DC    HL2'm'              Number of LIBVEC slots
         DC    CL3'ppp'            Name prefix
         DC    XL1'nn'             Version Number
         DC    AL4(aaaaaaaa)       Addr of Address Resolver or 0
*********************************************************************
*  LIBPACK Information Section - Contains an entry for each LIBPACK*
*********************************************************************
         DC    CL8'ssssssss'       LIBPACK name
         WXTRN kkkkkkkk
         DC    AL4(kkkkkkkk)       Address of LIBPACK.  See notes
*                                  following figure.
         DC    BL8'flags'          LIBPACK attributes
BIT0     EQU   X'80'               "Dynamic" LIBPACK
BIT1     EQU   X'40'               "Resolve" invoke the Address
*                                  Resolver Routine
BIT27    EQU   X'37'               **** Reserved *******
         DC    AL1(0)              **** Reserved *******
         DC    AL2(k)              Entry number of first related
*                                  entry on chain.
*        .     .                   .
*        (Additional LIBPACK entries are repeat of above 16 bytes)
*        .     .                   .
**********************************************************************
*  LIBVEC Information Section - Contains an entry for each LIBVEC     *
*                              slot in LIBVEC slot order.            *
**********************************************************************
         DC    CL5'eeeee'          Library routine name suffix
         DC    BL8'flags'          Library routine attributes
BIT0     EQU   X'80'               This routine is part of a LIBPACK
BIT1     EQU   X'40'               Invoke address resolver
BIT2     EQU   X'20'               Do Not Perform AMODE  switching
*                                  code for this module.
BITS37   EQU   X'3F'               *** Reserved ***
         DC    AL1(j)              LIBPACK number; index into LIBPACK
*                                  Information Section)
         DC    AL2(k)              Entry number of next related
*                                  entry on chain or 0 to indicate
*                                  end of chain (if this routine is
*                                  part of a LIBPACK).
*        .     .                   .
*        (Additional LIBVEC entries are repeat of above 9 bytes)
*        .     .                   .
         END   CEEPLVD
```

Figure 69. LIBVEC Descriptor

Notes:

1. One or more LIBPACKs (and their library routines) can be directly link-edited with the LVD. In the LIBPACK information section, the address constant of a LIBPACK can also be defined as an A-type address constant of zero or a V-type address constant. A V-type indicates the address of the LIBPACK is always link-edited with the LVD. An A-type address constant of zero indicates the LIBPACK should always be loaded.

2. The LVD must remain in memory for the life of the LIBVEC it represents. It is used by the subroutine loader as the source of the names of the modules to be dynamically loaded. However, it is designed to reside above the 16 megabyte line.
3. The LVD is reentrant and can exist in the (E)LPA.
4. Within the LIBVEC information section, the entries for the routines of a LIBPACK are forward chained together. When the subroutine loader determines that the routine to be loaded is part of a dynamic LIBPACK, it loads that LIBPACK. The chain is then followed to insure that the LIBVEC slots for all routines within the LIBPACK are updated.
5. The LIBVEC owner can provide an address resolver routine (as part of the LVD contained load module). If present and the LIBPACK attribute resolve is flagged, this routine is invoked by LIBVEC initialization or the subroutine loader. It is passed the address of the LVD LIBVEC information section, the entry number of the first related entry on the chain, the address of the load module's external entry point. It returns a temporary LIBVEC table with addresses resolved to their respective LIBVEC slots.

   If the LIBPACK attribute resolve is flagged and no address resolver routine is present then a default address resolver internal to Language Environment program management is used. It assumes a table of address constants equal to the dimension of its related LIBVEC are located at the load module's external entry point. An entry for a particular routine must be in the same position within the table as its SLOTn is within LIBVEC.

   When the address resolver routine is invoked, R1 it points at the following parameter list:

```
ARXPARMS DS   0F
         DS   F                          *** Reserved ***
ARXLVD1  DC   A(first-LVD-entry)      IN,  Addr of first LVD info entry.
ARXLVDM  DC   AL4(first-entry-number) IN,  entry number of first related
                                           entry on the chain
ARXMODAD DC   A(Module-Entry)         IN,  Addr of LIBPACK load module
ARXEPNAD DC   A(vector-table)         OUT, Addr of a temporary LIBVEC table
                                           with routine addresses in
                                           their respective slots.
```

   The address resolver routine must be written as REENTRANT AMODE 31 RMODE ANY. It is entered using BALR 14,15 in AMODE 31 and, therefore, can return using BR 14.

LIBVEC Initialization

The Language Environment LIBVEC is initialized as part of Language Environment initialization. Prior to first use, the LIBVECs of other library owners should be initialized as part of the owning member's initialization. A member's LIBVEC is initialized by calling the LIBVEC initialization routine CEEPLVI. It is passed the name or address of an LVD. If the name of the LVD is passed, it must exist as a load module in the LIBVEC owner's library.

During LIBVEC initialization, each INIT LIBPACK structured with the address constant table equal to the LIBVEC entries is ORed directly into the LIBVEC's SLOT section. This eliminates the individual handling of each LIBVEC SLOT and its associated overhead.

The LIBVEC initialization routine (CEEPLVI) performs the following functions.

- Load the LVD if the address of the LVD module name was passed.
- Load any INIT LIBPACKs that are not a part of the LVD contained load module.

- Get heap storage for the LIBVEC.
- Insure that all LIBVEC entries are initialized properly.
- Return the address of the LIBVEC.

CWI to LIBVEC Low-Level Services

This section describes the interfaces provided by the library subroutine access sub-component for use by other Language Environment library routines and high-level language library routines. These functions can be accessed as follows:

```
L    R1,parmptr                      R1 points to a parameter list
L    R15,CEECAACELV-CEECAA(,R12)     Get address of CEL LIBVEC
L    R15,CEECELVPxxx-CEECAACELV(,R15) Get address of CEL library routine
                                     GLUE AREAn from CEL LIBVEC slot
BALR R14,R15                         Invoke the library routine
```

The sections below define the following items for each function:
- The LIBVEC slot offset
- The parameter list format
- The feedback codes returned in GPRs 15 and 0

CEEPLVI — LIBVEC Initialization

The CEEPLVI callable service performs the following functions:
- Load any INIT LIBPACKs that are not a part of the LVD contained load module.
- Get heap storage for the LIBVEC.
- Insure that all LIBVEC slots are initialized properly.
- Return the address of the LIBVEC.

During LIBVEC initialization, each INIT LIBPACK structured with the address constant table equal to the LIBVEC entries is ORed directly into the LIBVEC's slot section. This eliminates the individual handling of each LIBVEC slot and its associated overhead.

Syntax

void CEEPLVI (*libvec_descriptor, libvec_table, [fc]*)

```
POINTER    *libvec_descriptor;
POINTER    *libvec_table;
FEED_BACK  *fc;
```

CEEPLVI

Call this CWI interface as follows:

```
L     R15,CEECAACELV-CEECAA(,R12)   Address of CAA in R12
L     R15,0112(,R15)
BALR  R14,R15
```

libvec_descriptor **(input)**

The address of the LIBVEC descriptor module that describes how to build the LIBVEC.

libvec_table **(output)**

The address of the LIBVEC table.

fc **(output/optional)**

The parameter in which the callable service feedback code is placed. The following conditions can result from this service:

CEE000	Severity	0
	Msg_No	N/A
	Message	The service completed successfully.
CEE3E1	Severity	3
	Msg_No	3505
	Message	Load of [module_name] LIBVEC descriptor module was unsuccessful.
CEE3E2	Severity	3
	Msg_No	3506
	Message	Load of [libpack_name] LIBPACK was unsuccessful.
CEE3E3	Severity	3
	Msg_No	3507
	Message	Not enough storage available for LIBVEC table.
CEE3E4	Severity	3
	Msg_No	3508
	Message	Number of LIBPACKs specified in the LIBVEC descriptor module exceeded maximum of 256 supported. No LIBPACKs were loaded.
CEE3E5	Severity	3
	Msg_No	3509
	Message	Number of LIBVEC slots specified in the LIBVEC descriptor module either exceeds maximum(1024) or less than minimum(1) allowed for a LIBVEC table.

CEEPLVE — Verify Load/Delete

The subroutine verify load/delete CWI is provided for use by functions that require the subroutine to be preloaded. CEEPLVE is explicitly called when needed. When the function is load, it loads the indicated subroutine and updates its LIBVEC fields (unless this has already been done). It always returns the subroutine's address as an output parameter. When the function is delete, it deletes the indicated subroutine and updates its LIBVEC fields as if the subroutine was never loaded (unless this has already been done).

Syntax

void CEEPLVE (*function_code, libvec_slot, libvec_table, libvec_entry, [fc]*)

```
INT        *function_code;
INT        *libvec_slot;
POINTER    *libvec_table;
POINTER    *libvec_entry;
FEED_BACK  *fc;
```

CEEPLVE

Call this CWI interface as follows:

```
L     R15,CEECAACELV-CEECAA(,R12)   Address of CAA in R12
L     R15,0108(,R15)
BALR  R14,R15
```

function_code **(input)**

One of the following:

- 1 — LOAD LIBVEC module
- 2 — DELETE LIBVEC module

libvec_slot **(input)**
The LIBVEC slot offset into the LIBVEC table of which module verify load/delete.

libvec_table **(input)**
The address of the LIBVEC table built by the LIBVEC initialization routine(CEEPLVI).

libvec_entry **(output)**
The entry address of the LIBVEC module. This parameter is undefined for function code DELETE.

fc **(output/optional)**
The parameter in which the callable service feedback code is placed. The following conditions can result from this service. Feedback codes are:

CEE000	Severity	0
	Msg_No	N/A
	Message	The service completed successfully.
CEE3E6	Severity	3
	Msg_No	3510
	Message	[module_name] module is a member of the “init” LIBPACK *[libpack_name]* and was not deleted.
CEE3E7	Severity	3
	Msg_No	3511
	Message	Invalid function code.
CEE3E8	Severity	3
	Msg_No	3512
	Message	Verify Load/Delete service request for module *[module_name]* was unsuccessful.

Note: If the function is DELETE LIBVEC and its entry point is part of an INIT LIBPACK, the LIBPACK is not deleted.

CEEPLVT — LIBVEC Termination

The CEEPLVT callable service deletes LIBVEC subroutines and frees up storage obtained for the LIBVEC table during termination of the last enclave of a process. Each LIBVEC owner should invoke the LIBVEC termination CWI for deletion of its LIBVEC subroutines and to free-up the storage obtained for its LIBVEC table.

Syntax

void CEEPLVT (*libvec_table, [fc]*)

```
POINTER    *libvec_table;
FEED_BACK  *fc;
```

CEEPLVT
Call this CWI interface as follows:

```
L     R15,CEECAACELV-CEECAA(,R12)   Address of CAA in R12
L     R15,0116(,R15)
BALR  R14,R15
```

libvec_table **(input)**
The address of the LIBVEC table built by the LIBVEC initialization routine (CEEPLVI).

fc **(output/optional)**
The parameter in which the callable service feedback code is placed. The following conditions can result from this service.

CEE000	Severity	0
	Msg_No	N/A
	Message	The service completed successfully.
CEE3E9	Severity	3
	Msg_No	3513
	Message	LIBVEC termination was unsuccessful.

CEEPPOS - Program Object Services

The CEEPPOS CWI provides several functions for requesting information and data for a program object, with limited support for load modules. A program object can be identified by examining the externals table (CEEBETBL). If the value in the ETBL_ENTRIES field is greater than or equal to 9 and the ETBL_A_IEWBLIT field is non-zero, then the executable program is a program object; otherwise it is a load module.

Syntax

void CEEPPOS (*function, class_name, entry_point, class_address, class_size, [fc]*)

```
INT4       *function;
CHAR16     *class_name;
POINTER    *entry_point;
POINTER    *class_address;
INT4       *class_size;
FEED_BACK  *fc;
```

CEEPPOS
Call this CWI interface as follows:

```
L     R15,CEECAACELV-CEECAA(,R12)
L     R15,4036(,R15)
BALR  R14,R15
```

function **(input)**
one of the following values, which indicates the requested function:

function **Value**	**Function Name**	**Meaning**
1	OBTAIN	Request Language Environment to obtain and initialize storage for the writable static area of a program object. This function can only be specified with a *class_name* of C_WSA or CEE_ALL. The C_WSA storage will be obtained by the Loader, except when Language Environment obtains the storage from user HEAP for either CICS or preinitialization environment with user storage routines. Language Environment determines the RMODE of the storage from the HEAP run-time option. Storage is initialized to zeros unless it is explicitly set to a value due to compiler-generated “recipe cards”. When the CEE_ALL class is specified, the address and size of C_WSA, C_@@DLLI, and C_@@STINIT are returned in a caller-provided 6 word area. The address for the caller-provided area is input in *class_address* and the size of the area (24 bytes) is input in *class_size*.
2	RELEASE	Request Language Environment to release writable static area of a program object. This function can only be specified with the *class_name* C_WSA.
3	REFRESH	Request Language Environment to refresh writable static area of a program object. This function can only be specified with the *class_name* C_WSA. This function re-initializes the current WSA to its initial value, which was established by the OBTAIN function.
4	LOCATE	Request Language Environment to locate a specific class within the program object. This function can **not** be specified with the *class_name* C_WSA.
5	QUERY	Request Language Environment to return information and characteristics of a program object or load module. When this function is used with the CEE_ALL class, information about the program object or load module specified by entry_point is returned in a caller-provided one word area. The address for the caller-provided area is input in class_address and the size of the area (four bytes) is input in class_size. The following bits are defined in the fullword returned to the caller. **Bits** **Description** **0** If this bit is on, then the program object or load module is a DLL (it exports at least one variable and/or function). If this bit is off, then it is not a DLL (but may import variables or functions from a DLL). **1** If Query bit (1) is on, then the program object consists of XPLINK compiled functions. If this bit is off, then the program object is entirely non-XPLINK, or it is a load module. **2** If this bit is on, then the program object or load module is reentrant and has an associated Writable Static Area (WSA). If this bit is off, then it is not reentrant or does not have a WSA. **3–31** Reserved.

class_name **(input)**
specifies the name of a 16-byte field, which is padded on the right with blanks, that contains one of the following class names:

Class Meaning

C_WSA
Writable static area; the OBTAIN, RELEASE, and REFRESH functions are valid for this class.

C_@@DLLI
DLL static initialization routines; the LOCATE function is valid for this class.

C_@@STINIT
C++ Constructor and Destructor routines; the LOCATE function is valid for this class.

C_@@PPA2
Address of PPA2s; the LOCATE function is valid for this class.

CEE_ALL
Provides the address and size of the C_WSA, C_@@DLLI, and C_@@STINIT classes if the OBTAIN function has been specified.

Provides information about the program object or load module if the QUERY function has been specified.

entry_point **(input)**
The entry point returned by a Language Environment load service. It is used to identify this program object (or load module).

class_address **(input/output)**
The address of the class (input or output) or address of a caller-provided area (input).

For the OBTAIN function with the *class_name* specified as C_WSA, the field is an output value and will contain the address of the obtained and initialized writable static area (WSA). For the OBTAIN function with *class_name* CEE_ALL, the field is a required input value and must contain the address of a caller-provided 6-word area.

For the RELEASE and REFRESH functions, this field is a required input value. It should contain the address returned on a previous OBTAIN request.

For the LOCATE function, the field is an output value; it will contain the address of the class requested by *class_name*.

For the QUERY function with *class_name* CEE_ALL, the field is a required input value and must contain the address of a caller-provided one word area.

class_size **(input/output)**
The size of the class (output) or the size of the caller-provided area (input).

For the OBTAIN function and *class_name* specified as C_WSA, the field is an output value, which will contain the size of the obtained and initialized WSA. For the OBTAIN function with the *class_name* specified as CEE_ALL, this field is an input value and you must specify a size of 24 bytes.

For the LOCATE function, the field is an output value and will contain the size of the class requested by *class_name*.

For the QUERY function with *class_name* CEE_ALL, the field is an input value and must specify a size of four bytes.

For the RELEASE and REFRESH functions, this value is ignored.

fc **(output/optional)**
A 12-byte feedback code that indicates the results of this service. The following symbolic conditions may result from this service:

CEE000	Severity	0
	Msg_No	N/A
	Message	The service completed successfully.
CEE3EA	Severity	3
	Msg_No	3530
	Message	The service was invoked for a load module.
CEE3EB	Severity	3
	Msg_No	3531
	Message	The entry point was not recognized by Language Environment.
CEE3EC	Severity	3
	Msg_No	3532
	Message	The requested class does not exist in the program object.
CEE3ED	Severity	3
	Msg_No	3533
	Message	The service invoked a system function that was unsuccessful. The system return code was *return_code* and the system reason code was *reason_code*.
CEE3EE	Severity	3
	Msg_No	3534
	Message	The requested *function* is not supported.
CEE3EF	Severity	3
	Msg_No	3535
	Message	The requested *class_name* is not supported.
CEE3EG	Severity	3
	Msg_No	3536
	Message	Not enough storage was available for the WSA.
CEE3EH	Severity	3
	Msg_No	3537
	Message	The request to release the WSA was unsuccessful.
CEE3EI	Severity	3
	Msg_No	3538
	Message	The request to refresh the WSA was unsuccessful.
CEE3ET	Severity	3
	Msg_No	3549
	Message	The service was invoked for a program object that contains both XPLINK and NOXPLINK-compiled parts.

Usage Notes:

1. Members should invoke this service to obtain the WSA when they are invoked for event code 8 or event code 18 . Members should also invoke this service to release the WSA when they are invoked for event code 41.

2. The CEE_ALL class is provided as a performance improvement; it enables members to obtain the WSA and the address and size of three of the classes (C_WSA, C_@@DLLI, and C_@@STINIT) in one call to CEEPPOS.
3. When the WSA is obtained for a DLL, Language Environment saves the address and provides the necessary cleanup of the WSA when the implicitly-loaded DLLs are freed at enclave termination. When an explicitly-loaded DLL is explicitly freed, Language Environment will issue the Delete Module Event to allow the member to release the WSA. Otherwise, the member should release the WSA before deleting the program object. An example of a non-DLL program object is a re-entrant C program.
4. The RELEASE and REFRESH functions are not supported for DLL program objects. The member itself must use the RELEASE and REFRESH services with the appropriate serialization.
5. The QUERY function is the only CEEPPOS function that is valid for program objects or load modules; otherwise a feedback code of CEE3EA is returned.

CWIs for Explicit DLL Reference

Language Environment provides the following CWI services to support the explicit reference of dynamic load libraries (DLLs).

CEEPLDE — Load DLL

The CEEPLDE routine invokes the Language Environment multi-level load routine CEEPLOD2, which supports loading a routine from a data set or the Hierarchical File System (HFS). This support causes the writable static area (WSA) for the DLL to be obtained and initialized; it also returns a *dll_token* to represent the DLL on future requests. Note that the user of the *dll_token* should not make any assumptions about the content of the token.

Note: Usage by System Programmer C (SPC) is not supported.

Syntax

void CEEPLDE (*dll_name, dll_name_length, dll_token, [fc]*)

```
VSTRING    *dll_name;
INIT4      *dll_name_length;
TOKEN      *dll_token;
FEED_BACK  *fc;
```

CEEPLDE

Call this CWI interface as follows:

```
L     R15,CEECAACELV-CEECAA(,R12)
L     R15,4016(,R15)
BALR  R14,R15
```

dll_name **(input)**
name of the DLL to be loaded.

dll_name_length **(input)**
length of the name of the DLL to be loaded; this length excludes any null terminator at the end of the name.

dll_token **(output)**
a 32-bit field that represents the DLL that was loaded. The *dll_token* must be passed to other explicit requests for this DLL, such as: query function (CEEPQDF), query variable (CEEPQDV), and free (CEEPFDE).

fc **(output/optional)**

An optional 12-byte feedback code that indicates the results of this service. The following symbolic conditions may result from this service:

CEE000	Severity	0
	Msg_No	N/A
	Message	The service completed successfully.
CEE38V	Severity	2
	Msg_No	3359
	Message	The module or language list is not supported in this environment.
CEE3EU	Severity	3
	Msg_No	3550
	Message	DLL *dll_name* does not contain a CEESTART CSECT.
CEE3EV	Severity	3
	Msg_No	3551
	Message	DLL *dll_name* does not contain any C functions.
CEE3F0	Severity	3
	Msg_No	3552
	Message	DLL *dll_name* does not export any variables or functions.
CEE3F1	Severity	3
	Msg_No	3553
	Message	DLL *dll_name* is part of a circular list.
CEE3F2	Severity	3
	Msg_No	3554
	Message	There is not enough storage to load the DLL.
CEE3FB	Severity	3
	Msg_No	3563
	Message	Attempted to load DLL *dll_name* while running C++ destructors.
CEE3FC	Severity	3
	Msg_No	3564
	Message	DLL constructors or destructors did not complete, so DLL *dll_name* cannot be used.
CEE3FI	Severity	3
	Msg_No	3570
	Message	The DLL name was not valid.
CEE3FJ	Severity	3
	Msg_No	3571
	Message	Storage for writable static was not available for DLL *dll_name*.

CEEPFDE — DLL Free

The CEEPFDE service uses the *dll_token* to identify the DLL to be freed and to invoke the Language Environment multi-level delete routine CEEPDEL2, which supports deleting DLLs from a data set or from the Hierarchical File System (HFS), and to release the WSA of the DLL. After the DLL is deleted, any attempts to use the specified *dll_token* will produce the "invalid *dll_token*" condition.

Note: Usage by System Programmer C (SPC) is not supported.

Syntax

void CEEPFDE (*dll_token, [fc]*)

```
TOKEN      *dll_token;
FEED_BACK  *fc;
```

CEEPFDE

Call this CWI interface as follows:

```
L     R15,CEECAACELV-CEECAA(,R12)
L     R15,4020(,R15)
BALR  R14,R15
```

dll_token **(input)**

a 32-bit field that represents the DLL that is to be freed. This is the *dll_token* that is returned by the CEEPLDE service when the DLL was loaded.

fc **(output/optional)**

an optional 12-byte feedback code that indicates the results of this CWI. The following symbolic conditions may result from this service:

CEE000	Severity	0
	Msg_No	N/A
	Message	The service completed successfully.
CEE3FC	Severity	3
	Msg_No	3564
	Message	DLL constructors or destructors did not complete, so DLL *dll_name* cannot be used.
CEE3FD	Severity	0
	Msg_No	3565
	Message	The input *dll_token* was NULL.
CEE3FE	Severity	0
	Msg_No	3566
	Message	There are no DLLs to be freed.
CEE3FF	Severity	0
	Msg_No	3567
	Message	A logical delete was performed for DLL *dll_name*, but the DLL was not physically deleted.
CEE3FG	Severity	0
	Msg_No	3568
	Message	No DLL could be found that matched the input *dll_token*.

CEE3FH	Severity	2
	Msg_No	3569
	Message	The DLL function was not allowed because destructors are running for the DLL.
CEE3FR	Severity	3
	Msg_No	3579
	Message	Attempted to free DLL *dll_name* while running C++ destructors.

CEEPQDF — Query DLL Function

The CEEPQDF routine provides a pointer to an exported function in a specified DLL. Because the value returned is a pointer to a function descriptor, the address of the function's C_WSA is not returned; this information can be found within the descriptor itself.

Note: Usage by System Programmer C (SPC) is not supported.

Syntax

void CEEPQDF (*dll_token, func_name, func_name_length, func_pointer, [fc]*)

```
TOKEN      *dll_token;
VSTRING    *func_name;
INT4       *func_name_length;
POINTER    *func_pointer;
FEED_BACK  *fc;
```

CEEPQDF

Call this CWI interface as follows:

```
L     R15,CEECAACELV-CEECAA(,R12)
L     R15,4024(,R15)
BALR  R14,R15
```

dll_token **(input)**
a 32-bit field that represents the DLL that is to be queried for the named function (*func_name*). This is the *dll_token* returned by CEEPLDE when the DLL was loaded.

func_name **(input)**
name of the requested function exported from the DLL represented by the *dll_token*.

func_name_length **(input)**
length of the name of the requested function.

func_pointer **(output)**
pointer to the requested function, or 0.

fc **(output/optional)**
an optional 12-byte feedback code that indicates the results of this CWI. The following symbolic conditions may result from this service:

CEE000	Severity	0
	Msg_No	N/A
	Message	The service completed successfully.

CEE3FA	Severity	3
	Msg_No	3562
	Message	There is not enough storage to obtain a function pointer for external function *func_name* in DLL *dll_name*.
CEE3FC	Severity	3
	Msg_No	3564
	Message	DLL constructors or destructors did not complete, so DLL *dll_name* cannot be used.
CEE3FH	Severity	2
	Msg_No	3569
	Message	The DLL function was not allowed because destructors are running for the DLL.
CEE3FK	Severity	0
	Msg_No	3572
	Message	The input *dll_token* was not available for use.
CEE3FL	Severity	0
	Msg_No	3573
	Message	DLL *dll_name* does not export any functions.
CEE3FM	Severity	0
	Msg_No	3574
	Message	External function *func_name* was not found in DLL *dll_name*.
CEE3FP	Severity	0
	Msg_No	3577
	Message	The external function was not found in DLL *dll_name*.

CEEPQDV — Query DLL Variable

The CEEPQDV routine provides the virtual address of a particular exported variable of a specified DLL, which may then be used to reference the DLL's variable.

Note: Usage by System Programmer C (SPC) is not supported.

Syntax

void CEEPQDV (*dll_token, var_name, var_name_length, var_pointer, [fc]*)

```
TOKEN      *dll_token;
VSTRING    *var_name;
INT4       *var_name_length;
POINTER    *var_pointer;
FEED_BACK  *fc;
```

CEEPQDV

Call this CWI interface as follows:

```
L     R15,CEECAACELV-CEECAA(,R12)
L     R15,4028(,R15)
BALR  R14,R15
```

dll_token **(input)**
a 32-bit field that represents the DLL that is being queried for the named variable (*var_name*). This is the *dll_token* returned by CEEPLDE when the DLL was loaded.

var_name **(input)**
name of the requested variable exported from the DLL represented by the *dll_token*.

var_name_length **(input)**
length of the name of the requested variable.

var_pointer **(output)**
pointer to the requested variable, or 0.

fc **(output/optional)**
an optional 12-byte feedback code that indicates the results of the CWI. The following symbolic conditions may result from this service:

CEE000	Severity	0
	Msg_No	N/A
	Message	The service completed successfully.
CEE3FC	Severity	3
	Msg_No	3564
	Message	DLL constructors or destructors did not complete, so DLL *dll_name* cannot be used.
CEE3FH	Severity	2
	Msg_No	3569
	Message	The DLL function was not allowed because destructors are running for the DLL.
CEE3FK	Severity	0
	Msg_No	3572
	Message	The input *dll_token* was not available for use.
CEE3FN	Severity	0
	Msg_No	3575
	Message	DLL *dll_name* does not export any variables.
CEE3FO	Severity	0
	Msg_No	3576
	Message	External variable *var_name* was not found in DLL *dll_name*.
CEE3FQ	Severity	0
	Msg_No	3578
	Message	The external variable was not found in DLL *dll_name*.

CWIs for Implicit DLL Reference

Language Environment provides CWI support for the implicit loading of a DLL, which resolves the DLL's exported symbols with the referencing DLL application's matching imported symbols. CWIs are provided to perform the following functions:

- Trigger Load on Reference for imported variables

- Trigger Load on Call for imported functions
- Get Function support to provide linkage to a function that has been invoked through direct branching to a function pointer (as if it pointed to a function instead of a function descriptor).

In addition, when the enclave terminates, Language Environment provides the support to delete all implicitly-loaded DLLs and any explicitly-loaded DLLs that have not yet been deleted.

Note: The calling routine must ensure that AMODE switching is not necessary between the application and the DLL. The AMODE of the DLL entry is reflected in the high-order bit of the DLL's entry point address. Language Environment does not attempt to detect a mismatch in the AMODE of the DLL and DLL application and does not enforce this restriction.

Message Documentation

The following messages are unique to implicit DLL reference. The CWIs will signal these messages as error conditions.

CEE3F6	Severity	3
	Msg_No	3558
	Message	DLL *dll_name* does not export any variables.
CEE3F7	Severity	3
	Msg_No	3559
	Message	External variable *var_name* was not found in DLL *dll_name*.
CEE3F8	Severity	0
	Msg_No	3560
	Message	DLL *dll_name* does not export any functions.
CEE3F9	Severity	0
	Msg_No	3561
	Message	External variable *var_name* was not found in DLL *dll_name*.
CEE3FO	Severity	0
	Msg_No	3576
	Message	External function *func_name* was not found in DLL *dll_name*.

CEETLOC — Stub for Trigger Load on Call

The CEETLOC stub provides an interface to the CEEPLTC routine on behalf of an unresolved function reference; it then invokes the routine. The function descriptor block (FDCB) (see "FDCB — Function Descriptor Control Block" on page 306) contains the address of the CEETLOC before the first reference to the function. This stub is directly referenced from the compilation unit's generated code; it is also link-edited in the same program object as the compilation unit. The code that is generated from the compiler will locate the function descriptor, load registers 15 and 0 from 8 bytes past the start of the function descriptor, and branch to the address in register 15. Register 15 will then contain the address of CEETLOC and register 0 will contain the address of the function descriptor.

CEETLOC Stub for Trigger Load on Call

```
*/*****************************************************************/
*/*    CEETLOC - Language Environment "trigger load on call" stub    */
*/*                                                                  */
*/*    This stub contains dual entry points                          */
*/*    + 0 for standard linkage                                      */
*/*    +16 for FASTLINK                                              */
*/*****************************************************************/
CEETLOC  CSECT
CEETLOC  RMODE ANY
CEETLOC  AMODE ANY
         USING CEETLOC,15
         L     15,CEECAACELV-CEECAA(,12)
         L     15,CEECELVPTLC-CEECELV(,15)
         BR    15
         CNOP 0,8                        force alignment on +16
*                                        FASTLINK entry point
         L     15,CEECAACELV-CEECAA(,12)
         L     15,CEECELVPTLC-CEECELV(,15)
         B     16(15)
         CEEXCELV
         CEEXCAA
         END   CEETLOC
```

CEETLOC

Call this CWI interface as follows:

```
L     R15,CEECAACELV-CEECAA(,R12)
L     R15,4004(,R15)
BALR  R14,R15
```

- Register Usage:

Register	Content
R15	Entry point address of CEETLOC; for the FASTLINK format, this is CEETLOC + X'10'.
R14	Return address; for FASTLINK, R14 points to the parm list size and the return address is 4 bytes past R14.
R13	DSA address
R12	CAA address
R0	Function descriptor that represents the function that is in the target DLL.

- Sample of compiler-generated code:

```
L      R15,=Q(<dllfunc>)
AR     R15,R2
LM     R15,R0,8(R15)
ST     R0,500(,R12)
BALR   R14,R15
```

Note: The compiler-generated code must save the current value of the CEECAACRENT field, set CEECAACRENT from the function descriptor field (CEEFDCB_DLL_CWSA) at offset X'0C', and restore CEECAACRENT from the saved value. When Language Environment is called from CEETLOC to invoke the function, it will set CEECAACRENT with the WSA address for the newly-loaded DLL from the value saved in CEEFDCB_DLL_CWSA. On entry to the DLL function, register 0 will contain the WSA address from CEEFDCB_DLL_CWSA.

CEETHLOC — Stub for Trigger Load on XPLINK Call By Name

The function of the CEETHLOC stub is to interface to the CEEPHTLC (XPLINK Trigger Load on Call) routine on behalf of an unresolved ″by-name″ function call, which will load the DLL and then invoke the function.

This stub is directly referenced from the compilation unit's generated code, and is link-edited in the same program object as the compilation unit. The compiler-generated code will locate the function descriptor, load registers 5 and 6 from the start of the function descriptor, and branch to the stub address in register 6. Once inside the stub, register 7 contains the return address and register 5 contains the 'function_id' identifying this imported function (from the first word of the descriptor). Register 6 is used as a work register to load and branch to the entry point of the CEEPHTLC function.

CEETLOC Stub for Trigger Load on XPLINK Call by Name

```
*/*********************************************************************/
*/*                                                                   */
*/*    CEETHLOC - Language Environment                                */
*/*               "trigger load on XPLINK; call by name" stub         */
*/*                                                                   */
*/*    This stub contains one entry point                             */
*/*    + 0 for XPLINK linkage                                         */
*/*                                                                   */
*/*********************************************************************/
CEETLOCE CSECT
CEETLOCE RMODE ANY
CEETLOCE AMODE ANY
*
         DS    0D                        Doubleword aligned...
         DC XL7'00C300C500C500'          eyecatcher text ".C.E.E."
         DC XL1'F4'                      eyecatcher marker "4"
*
         ENTRY CEETHLOC
CEETHLOC XATTR LINKAGE(XPLINK)
CEETHLOC DS    0D                        Real entry pt of stub
         L     6,CEECAACELV-CEECAA(,12)
         L     6,CEECELVPHTLC-CEECELV(,6)
         BR    6
*
         CEEXCELV
         CEEXCAA
         END   CEETLOCE
```

- Register Usage:

Register	Content
R4	DSA address
R5	Identifier that represents the XPLINK function that is in the target DLL
R6	Entry point address of CEETHLOC
R7	Return address to caller
R12	CAA address

- Compiler generated code sample:

```
   LM    r5,r6,dd+0(envreg)       load environment & function addresses
*                                  ... from function descriptor
   BASR  r7,r6                    call the function
   DC    X'4700'
   DC    Y(signed offset/8 to entry point marker)
```

FDCB — Function Descriptor Control Block

The function descriptor control block (FDCB) contains the information that is needed to call a function from an application. For example, a DLL application “implicitly” references imported functions using compiler-generated code that picks up the 3rd and 4th word of the FDCB. The code then branches to the address in the 3rd word and passes the contents of the 4th word in register 0. An FDCB will be created for every imported function known to the program object. Those functions that are referenced “implicitly” are built initially by the Binder in the WSA of the importing program object; they are then modified dynamically at run time by Language Environment. They are accessible through offsets that are carried in the importing program object’s Import/Export Table (IET). An IET is an internal structure that identifies the functions and variables that are imported or exported by an application.

FDCBs will usually reside in the C_WSA because they are placed there by the Binder. However, Language Environment will dynamically construct an FDCB at execution time for any function that is explicitly referenced by a Query DLL function request.

Figure 70 shows the format of the FDCB. It is identical to the old C/C++ function descriptors, with respect to the fields that can be referenced by the compiler-generated code.

Function Descriptor Control Block (FDCB)

000000	ceeFDCB_Glue - Glue code for direct branches fo function pointer
000008	ceeFDCB_FuncAddr - Pointer to function (initial value = CEETLOC address)
00000C	ceeFDCB_DLL_CWSA - Pointer to exporting DLL's C_WSA (initial value = address of this function descriptor)
000010	ceeFDCB_MoreGlue - Address used by a glue code (above)
000014	ceeFDCB_DLLE - Address of DLL entry in import/export table
000018	ceeFDCB_CEESTARTPtr - Pointer to CEESTART
00001C	ceeFDCB_CWSA - Pointer to this program object's C_WSA

Figure 70. Function Descriptor Control Block (FDCB) Format

The fields in the FDCB are defined as follows:

Field Name
Value

CEEFDCB_GLUE
Code (8 bytes) for “old” modules that branch directly to a function pointer. This field is set by the Binder to a constant that represents a series of executable instructions that are identical to the glue code in the C/C++ Pre-linker based support. The glue code has the following structure:

HEX Value	Assembler Instruction	Comment
180F	`LR R0,R15`	Save address of descriptor
58FF0010	`L R15,16(R15)`	Get address of CEETGFTN
07FF	`BR R15`	Branch to routine

CEEFDCB_FUNCADDR
Address of the function.

This is part of the descriptor that is picked up and branched to by the compiler-generated code. Initially, this field is set by the Binder to the address of CEETLOC, which is the Language Environment “load on call” stub routine that causes the address of the actual function to be resolved and placed here before invoking the function itself.

CEEFDCB_DLL_CSWA
Pointer to the C_WSA of the exporting DLL.

This is required to establish correct addressability to the DLL’s C_WSA before invoking the DLL’s function. Initially, this field is set by the Binder to the address of the function descriptor containing it. This enables the CEETLOC code to find the descriptor and thus find the name of the exporting DLL in the program object’s Import/Export table. During execution, Language Environment then updates this field to point to the WSA of the exporting DLL.

CEEFDCB_MOREGLUE
Address of the routine that fixes calls from old modules.

This field is set by the Binder to the address of CEETGTFN, a CSECT in the application module, which is the Language Environment stub routine for fixing calls from old modules. The glue code at displacement +0 (mentioned above) picks up this address and branches to it.

CEEFDCB_DLLE
Address in the referencing program object’s Import/Export table entry, from which the name of the exporting DLL can be found. The Binder sets this field.

CEEFDCB_CEESTARTPTR
Address of referencing program objects CEESTART CSECT. The Binder sets this field to the address of CEESTART, which is a CSECT in every Language Environment-enabled application module that provides a path to other information in the executable program.

CEEFDCB_CWSA
Address of the program object’s C_WSA, which is the base address of the area in which its descriptors for imported symbols are defined. It **must** be restored as the **current** C_WSA upon return from the function. The Loader sets this field to the address of the WSA in which this FDCB is defined.

__bldxfd() — Build an XPLINK Compatibility Descriptor

The __bldxfd() function is passed a function pointer of unknown linkage as input and returns the address of an XPLINK compatibility descriptor that can be used in all situations in an XPLINK-compiled program. It can also be passed to a NOXPLINK-compiled program.

An XPLINK compatibility descriptor can be used like a C function pointer. It is built in such a way that it can be passed among functions compiled using different linkage conventions. For example, NODLL, DLL, XPLINK can use the descriptor. It can be called to pass control to the function that it represents. The linkage of the caller does not matter. The format of the compatibility descriptor is defined based on the linkage of the function that it represents.

- Calls from a non-XPLINK function through a compatibility descriptor to a n XPLINK function will first result in the RunOnDownStack CWI getting control to swap to the downward-growing stack.
- Calls from an XPLINK function through a compatibility descriptor to a non-XPLINK function will first result in the RunOnUpStack CWI getting control to swap to the upward growing stack.

Syntax

```
#include <edcwccwi.h>

char * __bldxfd (void *entry_point);
```

*void *entry_point*
A pointer to the entry point of the function for which an XPLINK compatibility descriptor is to be built. Depending on the linkage of the function that originally took the address of the function, the input could be either:

- a fullword function pointer containing the address of the function (NODLL).
- a 32 byte function descriptor (DLL).
- a 24 byte compatibility descriptor (XPLINK).

Returned Value

If successful, __bldxfd() returns a pointer to storage containing an XPLINK compatibility descriptor.

If unsuccessful, __bldxfd() will not return. It will terminate with a message indicating the cause of failure. It is possible that an invalid *entry_point* was passed as input, or possibly that storage could not be obtained.

Usage Notes:

1. The storage address returned by __bldxfd() will be one of the following:
   - The address passed in *entry_point* if it already represents an XPLINK compatibility descriptor.
   - The address passed in *entry_point* if it represented a DLL-compiled function descriptor. In this case, the descriptor was rewritten in storage (atomically) as an XPLINK compatibility descriptor.
   - The address of a newly obtained piece of storage if *entry_point* represented a NODLL-compiled function pointer (for example, the real address of a function). An XPLINK compatibility descriptor will be created in the obtain storage.
2. If _bldxfd() is passed a DLL function descriptor representing a function in a DLL that has not yet been loaded, that DLL will be loaded be _bldxfd() so that the DLL function address and WSA can be inserted into the constructed XPLINK compatibility descriptor. Note that the XPLINK compatibility descriptors always represent functions in loaded DLLs. Taking the address of a function in an XPLINK DLL forces that DLL to be preloaded during the initialization of the application.

3. _bldxfd() may cause program checks if it attempts to access an invalid address. The caller might wish to consider having a signal catcher set up to handle SIGSEGV with an appropriate error recovery routine.
4. Mixing XPLINK and non-XPLINK in the same program object is not supported. A NODLL function pointer passed as input must contain the address of a non-XPLINK function. NODLL-compiled functions cannot take the address of imported functions. This is the only way an XPLINK function can currently be directly accessed from non-XPLINK. In this case, _bldxfd() will construct an XPLINK compatibility descriptor representing a non-XPLINK function, so no XPLINK environment is necessary.

CEETLOR — Stub for Trigger Load on Reference

The CEETLOR stub provides an interface to the CEEPTLR routine on behalf of an unresolved variable reference and then returns to the calling routine. The variable descriptor (see “VDCB — Variable Descriptor Control Block” on page 310) contains a zero for the address of the variable before the first reference of the variable by the compiled code. This stub is directly referenced from the compilation unit’s generated code; it is also link-edited in the same program object as the compilation unit. The compiler will generate code to locate the variable descriptor, examine the first word of the variable descriptor and, if it is zero, invoke CEETLOR. Register 15 will contain the address of CEETLOR and register 0 will contain the address of the variable descriptor.

CEETLOR Stub

```
*/*********************************************************************/
*/*                                                                   */
*/*  CEETLOR - Language Environment "trigger load on reference" stub */
*/*                                                                   */
*/*********************************************************************/
CEETLOR  CSECT
CEETLOR  RMODE ANY
CEETLOR  AMODE ANY
         USING CEETLOR,15
         L     15,CEECAACELV-CEECAA(,12)
         L     15,CEECELVPTLR-CEECELV(,15)
         BR    15
         NOPR  0
         NOP   0
         B     1(15)
         CEEXCELV
         CEEXCAA
         END   CEETLOR
```

- Register usage:

Register	Content
R15	Entry point address
R14	Return address
R13	DSA address
R12	CAA address
R0	Variable descriptor that represents the variable that is in the target DLL.

- Sample of compiler-generated code:

```
ICM   R15,B'1111',=Q(<dllvar>)
BM    @4L5
L     R7,0(,R7)
:                OTHER CODE
```

```
      :
@4L5 DS    0F
     MVC   132(4,R13),296(R3)
     B     300(,R3)
           =F'1198534796'
     AL    R15,128(,R13)
     ST    R15,140(,R13)
     ICM   R15,B'1111',0(R15)
     EX    R0,132(,R13)
     L     R15,=V(CEETLOR)
     ST    R14,136(,R13)
     ST    R0,144(,R13)
     L     R0,140(,R13)
     BALR  R14,R15
           =F'0'
     LM    R14,R0,136(R13)
     B     308(,R3)
```

After the variable descriptor has been updated, the compiler-generated code can obtain the address of the variable within the DLL. To do so, add the value of the CEEVDCB_VARPQCON to the address of the WSA of the compiler-generated code.

VDCB — Variable Descriptor Control Block

The Variable Descriptor Control Block (VDCB) defines a structure that provides information that is need to reference a variable from an application. For example, a DLL application can use compiler-generated code to “implicitly” refer to imported variables. The compiler-generated code tests the first word for zero and, if it is zero, calls the CEETLOR stub routine to resolve the address of the variable. All VDCBs reside in the C_WSA because they are placed there by the Binder. Figure 71 shows the format of the VDCB.

Variable Descriptor Control Block (VDCB)

000000	ceeVDCB_VarPQcon - "Pseudo-Qcon" of the variable
000004	ceeVDCB_DLLE - Address of DLL entry in import/export table
000008	ceeVDCB_CEESTARTPtr - Pointer to CEESTART
00000C	ceeVDCB_CWSA - Pointer to C_WSA

Figure 71. Variable Descriptor Control Block (VDCB) Format

The fields in the VDCB are defined as follows:

Field Name
Value

CEEVDCB_VARPQCON
“pseudo-Qcon” for the variable.

A “pseudo-Qcon”, which is a concept introduced in C/C++, is a displacement that gives the address of the referenced DLL’s variables when it is added to the base address of the area (C_WSA) in which the

referencing program object's descriptors are defined. That is, this displacement is an offset from the base address of one area to a storage location in a different area.

CEEVDCB_DLLE
Address in the referencing program object's Import/Export Table (IET), from which the name of the exporting DLL can be found. The Binder sets this field.

CEEVDCB_CEESTARTPTR
The Binder sets this field to the address of CEESTART, which is a CSECT in every Language Environment-enabled application module that provides a path to other information in the executable program.

CEEVDCB_CWSA
Address of this program object's C_WSA, which is the base address of the area in which its descriptors for imported symbols are defined. The Loader sets this field to the address of the WSA in which the VDCB is define. This is used to decode each "pseudo-Qcon" of a DLL's variable, which provides the location of the imported variable on terms of the start of the referencing program object's C_WSA. It is also used, when working with the referencing program object's Import/Export table, to decode its Qcons for the descriptors of its imports.

CEETGTFN — Stub for Function Invocation of Old Code

The CEETGTFN stub supports levels of C code that branch directly to function pointers. With this support, all function descriptors are headed by "glue code" that consists of a constant. This constant is a series of instructions to save the contents of register 15 into register 0, load register 15 with a later slot in the same descriptor that contains the address of CEETGTFN, and branch to the CEETGTFN routine.

CEETGTFN Stub

```
*/*******************************************************************/
*/*                                                                 */
*/*   CEETGTFN - Language Environment "get function" stub           */
*/*                                                                 */
*/*******************************************************************/
CEETGTFN CSECT
CEETGTFN RMODE ANY
CEETGTFN AMODE ANY
         USING CEETGTFN,15
         L     15,CEECAACELV-CEECAA(,12)
         L     15,CEECELVPGTFN-CEECELV(,15)
         BR    15
         NOPR  0
         NOP   0
         B     1(15)
         CEEXCELV
         CEEXCAA
         END   CEETGTFN
```

CEETGTFN
Call this CWI interface as follows:

```
L     R15,CEECAACELV-CEECAA(,R12)
L     R15,4012(,R15)
BALR  R14,R15
```

CWIs to Find the Writable Static Area (WSA)

CEEPFWSA — Find Writable Static Area (WSA)

The CEEPFWSA provides the ability to locate the writable static area (WSA) associated with a load module or a program object containing a specified entry point within the current enclave.

Syntax

void CEEPFWSA (*entry_point, wsa_address, [fc]*)

```
POINTER    *entry_point;
POINTER    *wsa_address;
FEED_BACK  *fc;
```

CEEPFWSA

Call this CWI interface as follows:

```
L     R15,CEECAACELV-CEECAA(,R12)
L     R15,2832(,R15)
BALR  R14,R15
```

entry_point **(input)**

The entry point of a function whose WSA address is to be located.

wsa_address **(output)**

The address of the caller provided area in which the WSA address will be returned if the call is successful.

fc **(output/optional)**

An optional 12-byte feedback code that indicates the results of this service. The following symbolic conditions may result from this service:

CEE000	Severity	0
	Msg_No	N/A
	Message	The service completed successfully.
CEE3EL	Severity	3
	Msg_No	3541
	Message	A writable static area (WSA) associated with the entry point was not found.

Usage Notes:

1. The CEEPFWSA service will verify that the entry point is a valid C/370 or Language Environment style entry point. It will then examine all loaded modules to find one that contains that entry point. Modules can be the main load module or any load modules loaded by fetch(), COBOL dynamic call, PIPI, CEEFETCH, or DLL load. When the load module is found and the load module has a WSA, the wsa_address associated with the module will be returned.
2. If the load module is not recognized as a Language Environment-conforming load module, then the feedback code will be CEE3EL and the wsa_address is undefined.
3. If the load module is recognized as a Language Environment-conforming load module, and the load module does not have a WSA, then the feedback code will be CEE000 and the wsa_address will be zero.

4. If the load module containing the entry point has been fetched more than once, the service will return the WSA of the last fetch.
5. If the load module containing the entry point has been fetched at least once and has been loaded as a DLL, this service will return the WSA associated with the DLL invocation.

__fnwsa() —- CWI to find a writable static area

The __fnwsa() function returns the address of the Writable Static Area (WSA) associated with the function represented by *entry_point*.

__fnwsa() can be used when the passed-in *entry_point* is not in the current address space. To access storage outside the current address space, the user must provide the *callback_p* parameter. *callback_p* is a pointer to a user-written function that fetches all data required by __fnwsa(). Generally, the (**callback_p*)() function would obtain the data using some application-dependent method (like BPX1PTR) and move it into the current address space, where __fnwsa() can access it directly. If the passed-in *entry_point* is in the same address space and is directly accessible to __fnwsa(), *callback_p* can be NULL.

Syntax

```
#include <edcwccwi.h>

void * __fnwsa (const void * entry_point, void * (*callback_p)(void *data_p,
size_t data_l), const void * caa_p);
```

const void * *entry_point*

entry_point is a pointer to the entry point of the function whose WSA address is to be located. *entry_point* may point to a function in another address space or in some other place not directly accessible by __fnwsa(). If this address is not directly accessible, then both the *callback_p* and *caa_p* parameters must be non-NULL. The callback function will be used to access *entry_point* indirectly.

void * (*callback_p***)()**

callback_p is a pointer to a user-provided function that fetches data not normally accessible by __fnwsa(). If *callback_p* is NULL, __fnwsa() accesses *entry_point* and any other required Language Environment data areas directly in the current address space. All required data must be directly accessible to __fnwsa() in this case.

The user-provided (**callback_p*)() function is passed the address and length of data to access. It must fetch the data in some application-dependent manner, and make the data available in the current address space in a place accessible to __fnwsa(). (**callback_p*)() must return a pointer to the copied data. This data must remain available to __fnwsa() until the next call to (**callback_p*)(), or until __fnwsa() returns to its caller, whichever happens first. On subsequent calls, *callback_p*)() is allowed to reuse the same data passback area.

There is no provision for (**callback_p*)() to pass back an error return code, indicating that the requested data could not be obtained. If (**callback_p*)() cannot return the requested data, it must not return to __fnwsa(). When an error occurs, (**callback_p*)() may:

- longjmp() back to some error return point in the user code that called __fnwsa()
- ABEND or otherwise terminate abnormally

- exit(), pthread_exit()
- raise a caught signal where the catcher does longjmp() so as not to return to __fnwsa()
- use Language Environment condition management to bypass __fnwsa() after the error and resume in user code
- recover in some other way that does not involve returning to __fnwsa()

__fnwsa() calls (**callback_p*)() with two parameters:

**void ***_data_p_
: *data_p* is a pointer to the start of the required data. This address might not be in the current address space.

size_t *data_l*
: *data_l* is the number of bytes of data required. *data_l* will never exceed 16 bytes. If (**callback_p*)() cannot pass back the complete data requested, it must not return to __fnwsa().

const void * *caa_p*
: Address of the Language Environment CAA control block, required only if the second parameter of *__fnwsa()* (that is, *callback_p*) is non-NULL. This is the address of the CAA in the address space containing *entry_point*.

Returned Value

If successful, __fnwsa() returns the WSA address of the function specified by *entry_point*. If the function does not have a WSA, then __fnwsa() returns NULL.

If unsuccessful, __fnwsa() returns -1, and sets errno to one of the following values:

ESRCH
: This error indicates that a matching load module could not be found that contains the passed-in *entry_point*.

EINVAL
: This error occurs if *entry_point* is not a valid C/370 or Language Environment style entry point. This error also occurs if *entry_point* is NULL when __fnwsa() is called.

EMVSPARM
: A callback function was supplied as the second parameter, but the CAA address supplied as the third parameter is NULL.

Usage Notes:

1. __fnwsa() may cause program checks if it accesses invalid addresses. This is especially likely to happen if *callback_p* is NULL and the *entry_point* being looked at is not valid. For this reason, the caller should consider having a signal catcher set up to handle SIGSEGV with appropriate error recovery.
2. The __fnwsa() service will verify that the entry point is a valid C/370 or Language Environment style entry point. It will then examine all loaded modules to find one that contains the specified *entry_point*. Modules can be the main load module or any load modules loaded by fetch(), COBOL dynamic call, PIPI, CEEFETCH, or DLL load. When the load module is found and the load module has a WSA, the WSA address associated with the module will be returned.
3. If the load module containing the entry point does not have a WSA, then __fnwsa() will return NULL.
4. If the load module containing the entry point has been fetched more than once, the service will return the WSA of the last fetch().

Chapter 9. Debugging and Performance Analysis

Language Environment provides interfaces upon which a debug tool, such as Debug Tool, can be built. The interfaces defined by Language Environment to a debug tool fall into the following classes: callable service, event handlers, and data areas. These interfaces, and the actions Language Environment takes on the behalf of a debug tool, are described in the following sections.

Language Environment also provides interfaces upon which a performance analysis tool, which is often called a profiler, can be built. This support is described in "Performance Analysis Support" on page 331. Much of this support is similar to the support Language Environment provides for debugging tools. Therefore, a debugging tool and a profiler cannot be used at the same time.

Language Environment-Provided CWIs for the Debug Tool

CEEQLOD — Query Modules Loaded with Enclave Level Load Service

Language Environment provides the following CWI service to a debugging tool, such as Debug Tool, to query known modules currently loaded with the Language Environment enclave level load service.

Syntax

void CEEQLOD (*function_code, load_list_pointer, [fc]*)

```
INT4       *function_code;
POINTER    *load_list_pointer;
FEED_BACK  *fc;
```

CEEQLOD

Call this CWI interface as follows:

```
L     R12,A(CAA)            Get the address of CAA in R12
L     R15,CEECAACELV-CEECAA(,R12)
L     R15,2836(,R15)
BALR  R14,R15
```

function_code **(input)**

A fullword binary integer with one of the following values:

1 Get load list

2 Free load list

load_list_pointer **(input/output)**

The address of a load list of module information of known modules currently loaded with the Language Environment enclave level load service. For a description of load list, see Figure 72 on page 316.

For function code 1 (get load list), Language Environment sets this parameter to the address of a load list. For function code 2 (free load list), Language Environment receives this as an inbound parameter and frees the load list addressed by this pointer.

fc **(output/optional)**

A 12-byte feedback code passed by reference. If specified as an argument, feedback information (a condition token) is returned to the calling routine. If not specified, and the requested operation was not successfully completed, the condition is signaled to the condition manager. The following symbolic conditions can result from this service:

© Copyright IBM Corp. 1991, 2002

CEE000	Severity	0
	Msg_No	N/A
	Message	The service completed successfully.
CEE3DN	Severity	2
	Msg_No	3511
	Message	Invalid function code.
CEE3DR	Severity	0
	Msg_No	3515
	Message	No known modules currently loaded via Language Environment load service.

Usage Notes:

1. The *get load list* function obtains storage for the load list and returns module information of all known modules currently loaded with the Language Environment load service. If no module has been loaded, the load_list_pointer returned is a -1.
2. The *free load list* function should be called prior to Language Environment termination.
3. The *free load list* function does not need to be called when the feedback code is CEE3DR. However, it is not invalid to do so.

```
 1 qll Based ,                  /* QUERY LOAD LIST            */
   3 qll_header,                /* query load list header     */
     5 qll_eye     Char(4),     /* Eye catcher 'QLL'          */
     5 qll_version Bin(15),     /* qll version number         */
     5 qll_size    Bin(15),     /* number of bytes in qll     */
     5 qll_num_lod Fixed,       /* qll number of loads        */
     5 qll_span    Fixed,       /* number of array elements   */
   3 qll_elem(0:*),             /* load list elements         */
     5 *           Char(4),     /* reserved                   */
     5 qll_elem_lpa   Ptr,      /* load point address         */
     5 qll_elem_epa   Ptr,      /* entry point address        */
     5 qll_elem_modsz Fixed,    /* module size                */
     5 qll_elem_name  Char(8);  /* load list element name     */
```

Figure 72. Load List Layout

Language Environment provides a CWI that informs a debug tool of the routines that have already been loaded prior to the debug tool's initialization.

CEE3CBTS — Pass Component Broker Connector Parameters

Language Environment provides the following CWI service to a debugging tool, such as Debug Tool, to pass Component Broker Connector (CBC) debug context parameters.

By using the Attach Debug_Thread function code, the debugger is able to distinguish between being invoked for debugging all the threads in an environment or for a single specific thread.

Syntax

void CEE3CBTS (*function_code, trace_dbg_context_ptr, fc*)

```
INT4       *function_code;
POINTER    *trace_dbg_context_ptr;
FEED_BACK  *fc;
```

CEE3CBTS

This CWI is callable only from C or C++. The reference to CEE3CBTS is resolved at link-edit time using the SCEELKED data set.

Call this CWI interface as follows:

```
#pragma map(CEE3CBTS,"CEE3CBTS")
#pragma linkage(CEE3CBTS, OS)

#define attach_dbg         1
#define start_dbg          2
#define suspend_dbg        3
#define resume_dbg         4
#define stop_dbg           5
#define attach_dbg_thread  6

#include <stdio.h>
#include <string.h>
#include <stdlib.h>
#include <errno.h>
#include <leawi.h>
#include <ceeedcct.h>
struct sess_info {
  int tcpaddress;
  int portid;
  int client_pid;
  int client_tid;
  int client_tcpaddr;
  int debugflow;
} sess_cb;

  _FEEDBACK fc;
  void CEE3CBTS( int, struct sess_info *, struct _FEEDBACK *);

main()
{
  CEE3CBTS(resume_dbg, &(sess_cb), &(fc)  );
  if ( _FBCHECK ( fc , CEE000 ) != 0 ) {
     printf("CEE3CBTS failed with message number %d\n",
            fc.tok_msgno);
  }
}
```

function_code **(input)**

A fullword binary integer with one of the following values:

1 Attach Debug
2 Start Debug
3 Suspend Debug
4 Resume Debug
5 Stop Debug
6 Attach Debug_Thread

trace_dbg_context_ptr **(input/output)**

This pointer contains the address of the CBC trace/debug context structure. The six elements of this structure are defined as follows:

- TCP/IP address (int)

  A fullword binary integer containing the TCP/IP address of the workstation debugger GUI.
- Debugger Port ID

  A fullword binary integer containing the Port ID of the debugger workstation daemon.
- Client Process ID

  A fullword binary integer containing the Process ID of the client.
- Client Thread ID

  A fullword binary integer containing the Thread ID of the client.
- Client IP address

  A fullword binary integer containing the TCP/IP address of the works client.
- Debug Flow

  A fullword binary integer describing debugger flow within CBC debug scenarios.

This structure should have the attribute of inout

fc **(output/optional)**
The feedback code indicates the result of this service. The following symbolic conditions can result from this service:

CEE000	Severity	0
	Msg_No	N/A
	Message	The service completed successfully.
CEE2F2	Severity	3
	Msg_No	2530
	Message	A debug tool was not available.
CEE2F7	Severity	3
	Msg_No	2535
	Message	Profiler loaded, debug tool was not available.

Usage Notes:

1. For *Attach Debug*, *Attach Debug_Thread*, or *Start Debug*, if a debug tool is not loaded, Language Environment loads the debugger and calls it, passing the parameters in the call. If the debugger is already loaded, Language Environment calls it and passes parameters in the call. If a debug tool is not available, Symbolic Feedback Code CEE2F2 is returned.
2. For *Suspend Debug*, *Resume Debug*, or *Stop Debug*, if a debug tool is already loaded, Language Environment calls the debugger, passing the parameters in the call. If a debug tool is not available, Symbolic Feedback Code CEE2F2 is returned.

CEEQFBC — Query Feedback Code Routine

The CEEQFBC CWI constructs a condition token given a Language Environment symbolic condition name.

Syntax

void CEEQFBC (*cond_name, cond_token, [fc]*)

```
VSTRING    *cond_name;
FEED_BACK  *cond_token;
FEED_BACK  *fc;
```

CEEQFBC

Call this CWI interface as follows:

```
L     R12,A(CAA)            Get the address of CAA in R12
L     R15,CEECAACELV-CEECAA(,R12)
L     R15,2976(,R15)
BALR  R14,R15
```

cond_name **(input)**

A halfword-prefixed character string symbolic condition name.

cond_token **(output)**

A 12-byte condition token that is constructed from the Language Environment symbolic name. The I_S_Info field is set to binary zero.

fc **(output/optional)**

The parameter in which the callable service feedback code is placed. The following conditions can result from this service.

CEE000	Severity	0
	Msg_No	N/A
	Message	The service completed successfully.
CEE3A8	Severity	1
	Msg_No	3400
	Message	The condition name was not recognized and the value of the *cond_token* is undefined.

Usage Notes:

1. If the condition token is unrecognized, the value of *cond_token* is undefined.
2. Language Environment recognizes *cond_name* values that start with CEE and have a corresponding message within the Language Environment message set. If the *cond_name* does not start with CEE, Language Environment polls the members.

CEETSFC — Translate Standard Feedback Code

The CEETSFC CWI constructs a condition token from a symbolic feedback code in Language Environment standard form.

Syntax

void (*CEECELVTSFC) (*sym_fbcode, fb_token, [fc]*)

```
VSTRING    *sym_fbcode;
FEED_BACK  *fb_token;
FEED_BACK  *fc;
```

CEECELVTSFC

A field in the CEL LIBVEC that points to the Translate Standard Feedback Code CWI.

Call this CWI interface as follows:

```
L     R15,CEECAACELV-CEECAA(,R12) CAA address is in R12
L     R15,3024(,R15)
BALR  R14,R15
```

sym_fbcode **(input)**
A halfword-prefixed character string symbolic condition name.

fb_token **(output)**
A 12-byte condition token that is constructed from the symbolic feedback code. The I_S_Info field will be set to binary zero.

fc **(output/optional)**
An optional parameter in which the callable service feedback code will be placed. The following conditions may result from this service.

CEE000	Severity	0
	Msg_No	N/A
	Message	The service completed successfully.
CEE3A8	Severity	3
	Msg_No	3400
	Message	The condition feedback code was not recognized and the value of the *fb_token* is undefined.
	Explanation	The condition name was not able to be translated into a corresponding Language Environment condition code.
	Programmer Response	Contact your service representative.
	System Action	Value of the condition token is undefined.

Usage Notes:

1. Normally be called by member event handler when processing the translate event-event 20.
2. A standard symbolic feedback code consists of the three letter facility ID catenated with message number expressed in base 32.

CEEBFBC — Build Feedback Code Routine

The CEEBFBC CWI constructs a Language Environment symbolic condition name given a Language Environment 12-byte Language Environment feedback condition name.

Syntax

void CEEBFBC (*cond_token, cond_name, [fc]*)

```
FEED_BACK  *cond_token;
VSTRING    *cond_name;
FEED_BACK  *fc;
```

CEEBFBC
Call this CWI interface as follows:

```
L     R12,A(CAA)            Get the address of CAA in R12
L     R15,CEECAACELV-CEECAA(,R12)
L     R15,2972(,R15)
BALR  R14,R15
```

cond_token **(input)**
A 12-byte condition token that is constructed from the Language Environment symbolic name. The I_S_Info field is ignored.

cond_name **(output)**
An 80-byte character string symbolic condition name. The condition name is left-justified and padded right with blanks. If the condition name is unknown, this field is undefined.

fc **(output/optional)**
The parameter in which the callable service feedback code is placed. The following conditions can result from this service.

CEE000	Severity	0
	Msg_No	N/A
	Message	The service completed successfully.
CEE3A9	Severity	1
	Msg_No	3401
	Message	The condition token was not recognized and the value of the *cond_name* is undefined.
CEE3AA	Severity	1
	Msg_No	3402
	Message	The condition token passed is invalid and the value of the *cond_name* is undefined.

Usage Notes:

1. A few checks to determine the validity of the inbound token are made. These checks are:
   a. Validating the case, the case must be 1 or 2.
   b. Validating the severity which must be 0 through 4, inclusive.
   c. For case 1 tokens, the severity occurs twice, and they must be consistent.
2. If the facility identifier is Language Environment while the IBM-assigned flag is not set, the condition CEEabc is returned or raised and the value of the *cond_name* is undefined.
3. If the facility identifier is not Language Environment, the condition CEEabc is returned or raised and the value of the *cond_name* is undefined.
4. Language Environment recognizes *cond_tokens* that have Language Environment as the facility identifier with the IBM-assigned flag on, and have a corresponding message within the Language Environment message set. If *cond_token* has a facility ID that is not CEE, Language Environment polls the members.

CEETSFB — Translate Standard Feedback Token

The CEETSFB CWI constructs a Language Environment standard feedback code from a 12-byte feedback token.

Syntax

void (*CEECELVTSFB) (*fb_token, sym_fbcode, [fc]*)

```
FEED_BACK  *fb_token;
VSTRING    *sym_fbcode;
FEED_BACK  *fc;
```

CEECELVTSFB
A field in the CEL LIBVEC that points to the Translate Standard Feedback Token CWI.

Call this CWI interface as follows:

```
L     R15,CEECAACELV-CEECAA(,R12) CAA address is in R12
L     R15,3020(,R15)
BALR  R14,R15
```

fb_token **(input)**
A 12-byte condition token that is constructed from the CEL symbolic feedback code. The I_S_Info field will be ignored.

sym_fbcode **(output)**
An 80-byte character string symbolic condition feedback code. If the condition token is unknown, this field will be undefined.

fc **(output/optional)**
An optional parameter in which the callable service feedback code will be placed. The following conditions may result from this service.

CEE000	Severity	0
	Msg_No	N/A
	Message	The service completed successfully.
CEE3A9	Severity	1
	Msg_No	3401
	Message	The condition token was not recognized and the value of the *sym_fbcode* is undefined.
	Programmer Response	Contact your service representative.
	System Action	Value of the feedback token is undefined.
	Explanation	A condition token was not able to be translated into a corresponding condition name.
CEE3AA	Severity	2
	Msg_No	3402
	Message	The condition token passed is invalid and the value of the *sym_fbcode* is undefined.
	Programmer Response	Contact your service representative.
	System Action	Value of the symbolic feedback code is undefined.
	Explanation	A condition token was determined to be invalid and is not able to be translated into a corresponding condition name.

Usage Notes:

1. Normally called by member event handler when processing the translate event-event 20.
2. A standard symbolic feedback code consists of the three letter facility ID catenated with message number expressed in base 32.

CEETGCAA — Get Next CAA Pointer

The CEETGCAA CWI, given a pointer to a CAA, returns a pointer to CAA of the next thread in the enclave.

Syntax

void CEECELVTGCAA (*caaptr, [fc]*)

```
POINTER    *caaptr;
FEED_BACK  *fc;
```

CEETGCAA

Call this CWI interface as follows:

```
L     R15,CEECAALEOV-CEECAA(,R12)
L     R15,236(,R15)
BALR  R14,R15
```

caaptr **(input/output)**

Given a *caaptr* as input, this CWI will return the next *caaptr* in the enclave.

fc **(output/optional)**

A 12-byte feedback code passed by reference. The following symbolic condition can result from this service:

CEE000	Severity	0
	Msg_No	N/A
	Message	The service completed successfully.

Note: Upon first call, the *caaptr* value most likely should be register 12 of the active thread. Because this is a loop, this service can then be repeatedly called until the original *caaptr* value is encountered again.

Debug Tool-Provided Event Handlers

One of the most important things a debug tool must do to be called by Language Environment is provide two logical event handlers:

- An event handler to handle general Language Environment events. When the debugger initializes, it must place the address of this event handler in the member list slot that corresponds to the debugger's member identifier. If the debugger has no member identifier, it should not modify any slots in the member list. If that slot is already initialized, then two members are using the same member identifier, and debugger initialization should fail.
- An event handler to handle debug events. The address of this event handler is maintained by Language Environment in the PCB field, CEEPCBDBGEH. When Language Environment initializes, this field is initialized to zero; when Language Environment loads the debug event handler, it sets this field to the address of the debug event handler.

Debug Tool Event Handler

The debug event handler must be loadable by Language Environment with the name CEEEVDBG. For additional information on invoking the debug event handler, see "Event Code 16 — Debug Tool Event" on page 465. Specification of which debug tool to be used is made at run time by exposing its name to the system for Language Environment to LOAD. A load failure indicates to Language Environment that a debug tool is not available while this program is running. The debug event handler is loaded and initialized when any one of the following occur:

- An initial command string or PROMPT is discovered and the TEST run-time option is in effect.

- The error condition is raised for the first time and the TEST run-time option is in effect with the ERROR suboption specified.
- Any condition is raised for the first time and the TEST run-time option is in effect with the ALL suboption specified.
- A call to CEETEST is made, regardless of the TEST run-time option setting.

Language Environment notifies the debugger of events through the address of the debug tool event handler contained in the CEEPCBDBGEH. The event handler interface is defined in Table 26 and the bit map descriptions are in Table 27 on page 326. The CWI CEE3CBTS event handler interface is defined in Table 28 on page 327.

Table 26. Debugger Language Environment Event Handler Interface

Debug Tool Event	Debug Tool Event Code	Parm 2	Parm 3	Parm 4
Condition raised	101	CIB	result code	
Unhandled condition	103	CIB	result code	
User handler next	105	CIB	1 2	user handler address member event handler address
Goto	111	DSA	DSA format	
PIPI Sub Initialization	115			
PIPI Sub Termination	116			
Enclave init	118	creator's EDB		
Enclave term	119			
Thread init	120	creator's CAA		
Debug tool term	121			
Thread term	122			
External entry	123	• Parm 2 = DSA (see note) • Parm 3 = cmd string • Parm 4 = INPL • Parm 5 = DSA format		
Module load	124	DSA	module descriptor	DSA format
Module delete	125	DSA	module name	DSA format
Storage free	126	storage	storage length	
Condition promote	127	CIB	result code	
Condition goto	128	DSA	DSA format	
Attention	129			
Debug tool program check	130	result code		
Message redirect	131	msg_text	ddname	
CALL CEETEST	132	DSA (see note)	cmd string	DSA format

Table 26. Debugger Language Environment Event Handler Interface (continued)

Debug Tool Event	Debug Tool Event Code	Parm 2	Parm 3	Parm 4
Execute Hook invocation	133	• Parm 2 = DSA • Parm 3 = hook offset • Parm 4 = DSA format • Parm 5 = A buffer containing general purpose registers • Parm 6 = Return address to the routine that was interrupted • Parm 7 = Entry point to the routine that was interrupted		
mutex_init	140	initializing thread_id	mutex	(for bit mask descriptions, see Table 27 on page 326)
mutex_destroy	141	destroying thread_id	mutex	
mutex_lock	142	owner thread_id	mutex	
mutex_unlock	143	thread_id releasing mutex	mutex	
mutex_wait	144	waiting thread_id	mutex	
mutex_unwait	145	posted thread_id	mutex	
mutex_relock	146	owner thread_id	mutex	
mutex_unrelock	147	owner thread_id	mutex	
cond_init	150	initializing thread_id	condition var	cv attr object
cond_destroy	151	destroying thread_id	condition var	
cond_wait	152	waiting thread_id	condition var	mutex
cond_unwait	153	posted thread_id	condition var	mutex
Initial thread create	160	initial thread_id	nil	stack_size
Initial thread exit	161	initial thread_id		
Pthread create	162	creating thread_id	created thread_id	stack_size
Pthread created	163	created thread_id	nil	stack_size
Pthread exit	164	created thread_id		
Pthread wait	165	joining thread_id	joined thread_id	
Pthread unwait	166	joining thread_id	joined thread_id	
Imminent CAA Chain Addition	167			
CAA Chain Addition Complete	168			
Imminent CAA Chain Deletion	169			
CAA Chain Deletion Complete	170			
POSIX fork() imminent	171			
In child process	172			

Table 26. Debugger Language Environment Event Handler Interface (continued)

Debug Tool Event	Debug Tool Event Code	Parm 2	Parm 3	Parm 4
POSIX exec() imminent	173			
Process clean up imminent	174			
Spawn is imminent	175			
HFS load module	176	DSA	HFS module descriptor	DSA format
Delete HFS load module	177	DSA	HFS module name	DSA format
In parent process	178			
After spawn	179			
CALL CEE3CBTS	180	(for parameter descriptions, see Table 28 on page 327)		
rwlock lock for read	181	thread_id	rwlock	
rwlock lock for write	182	thread_id	rwlock	
rwlock wait for read	183	thread_id	rwlock	
rwlock wait for write	184	thread_id	rwlock	

Note: This is the requestor's DSA, which means an HLL library routine DSA is likely the requestor of the Language Environment service or user DSA.

Table 27. Debugger Language Environment Event Handler Bit Mask Descriptions

Bit mask	Description
'00000000'X	The object is a private mutex with the non-recursive characteristic.
'00000001'X	The object is a private mutex with the recursive characteristic.
'00800000'X	The object is a shared mutex with the non-recursive characteristic.
'00800001'X	The object is a shared mutex with the recursive characteristic.
'08000001'X	The object is a private rwlock with the recursive characteristic.
'08800001'X	The object is a shared rwlock with the recursive characteristic.

Usage Notes:

1. There are indicators available for objects that are shared and separate events for each type of lock. This information indicates the shared object has two copies of DBX that run in different address spaces for applications that use a

shared mutex or rwlock. The first occurrence of a lock event, and the fact the object is shared, causes a new control structure for this object. That is, when the unique events,

142 mutex object
181 rwlock object, locking for read
183 rwlock object, locking for write

occur and the high order bit of the mutex_object content is ON, a control structure with a lock count of one will be created. This makes the view of a shared mutex or rwlock available in the using address space after the originating address space has initialized the shared object.

2. Shared mutex and rwlock objects will always be presented even if the NODEBUG option is one of the object's attributes.
3. If a shared object acquire event is reported and there is no entry for the lock object, an entry will be created for the object with a lock count of one. Then when an unlock event happens which sets the lock count to zero, the entry for the shared object will be removed.

Table 28. CWI CEE3CBTS Event Handler Interface Parameters

Number	Name	Description
1	Function Code	Integer values passed to CEE3CBTS by the invoker of the CWI. **1** Attach Debug **2** Start Debug **3** Suspend Debug **4** Resume Debug **5** Stop Debug **6** Attach Debug_Thread
2	TCP/IP address inout	A fullword binary integer containing the TCP/IP address of the debugger GUI.
3	Debugger port ID inout	A fullword binary integer containing the port ID of the debugger daemon.
4	Client Process IDinout	A fullword binary integer containing the Process ID of the client.
5	Client Thread ID inout	A fullword binary integer containing the Thread ID of the client.
6	Client IP address inout	A fullword binary integer containing the IP address of the client.
7	Debug Flow inout	A fullword binary integer containing debug flow information as provided by CBC.

CAA
A fullword binary integer that contains the address of the CAA.

CIB
A fullword binary integer that contains the address of the CIB.

DSA
A fullword binary integer that contains the address of the DSA.

DSA format
A fullword binary integer set to one of the following:

0 The format of the DSA is a standard OS linkage register save area (with/without Language Environment fields including NAB).
1 The format of the DSA is XPLINK style.

General purpose registers
A 64-byte buffer containing the general purpose registers stored in order 0 to 15 at the time the debug hook was executed. If the debugger changes these register values, the new values will be used when control is returned to the routine that executed the debug hook.

return_address
A fullword pointer containing the address of the instruction where control will be returned to the routine that executed the debug hook. If the debugger changes this address, control will be returned to the new location.

entry_ptr
A fullword pointer containing the address of the entry point of the routine that contains the debug hook.

EDB
A fullword binary integer that contains the address of the EDB.

module name
A halfword-prefixed string of the module name being deleted.

HFS module name
A fullword-prefixed string of the module name being deleted.

module descriptor
A structure describing the module that was just loaded. The structure is as follows:

```
dcl 1 module descriptor,
   3  load point  pointer,
   3  module size fixed,
   3  entry point pointer,
   3  name length fixed(15),
   3  module name char(255);
```

HFS module descriptor
A structure describing the module that was just loaded. The structure is as follows:

```
dcl 1 HFS module descriptor,
   3  load point  pointer,
   3  module size fixed,
   3  entry point pointer,
   3  name length fixed(31),
   3  module name char(255);
```

result code
A fixed(31) binary value action for condition manager to take. The supported values are:
- 110—Resume at the resume cursor
- 120—Percolate to next condition handler

storage length
A fixed(31) binary value containing the number of bytes of storage.

cmd string
A halfword-prefixed string containing the debug command.

msg_text
A halfword-prefixed string of the text that is transmitted by Language Environment message services.

ddname
An 8–byte character string, left-justified, padded right with blanks of the target ddname.

INPL
The Initialization Parameter List as passed to CEEINT. For the format of the INPL, see Figure 55 on page 143.

start_rtn
A function pointer to the start routine for the pthread.

thread_id
An 8-byte thread identifier.

mutex
A pointer to a mutex object.

recursive
A recursive type mutex.

nonrecurs
A nonrecursive type mutex.

condition var
A pointer to a condition variable object.

cv attr object
A pointer to a condition variable attributes object.

stack_size
A stack size attribute (in bytes) of initial or created thread.

nil Unused; null pointer.

Usage Notes:

1. A message is issued if the load fails because the Debug tool is not available.
2. All parameters are passed by reference.
3. Return codes are placed in R15
   00 Success
   16 Critical error in the debug tool; do not invoke again.
4. The debugger signals a CEE2F1 condition when it needs to quit from a nested enclave.

Language Environment Actions for the Interactive Debug Tool

This section discusses the actions Language Environment takes on behalf of a debug tool.

Language Environment parses the TEST run-time option on behalf of the debug tool and sets the appropriate flags within the Language Environment options control block. Language Environment sets the initial values for the test level and the debug tool event handler in the PCB. After its initial setting during the initialization of the first enclave within the process, this field is updated only by debug tool commands such as the SET TEST command. It is not influenced by nested enclave invocations. For every new enclave spawned and every thread being terminated, if the debug tool has been initialized, Language Environment thread initialization/termination calls the debug event with an enclave initialization or termination event code.

If the debug tool has been initialized, messages can be directed to the Language Environment message file are delivered to the debug tool by calling the debug event handler. In addition, the Language Environment error handler calls the debug event handler for all enabled conditions. The debug event handler is called after the enablement phase and prior to calling the condition handlers. It is also called when

a condition is promoted. Upon the occurrence of an attention interrupt, Language Environment calls the debug event handler with an event code indicating an attention interrupt. The debug tool can set hooks, process the event within certain restrictions, and wait for a synchronization point.

Language Environment Interactive Debug Data Areas

Language Environment provides data areas for a debug tool's use. These areas are described in this section. The CAA fields are as follows:

- Initial command string address and length is contained within the Language Environment options control block.
- The TEST option's command file ddname is contained within the Language Environment options control block.
- Indication of ALL, ERROR, or NONE TEST suboption is contained within the Language Environment options control block.
- Any debug tool can provide an event handler. The address of this handler should be placed in the member list slot for its member identifier, during debugger initialization, allowing processing of normal events. Debug type events are passed to the debug event handler CEEEVDBG. The two event handlers can be the same routine, if desired.

Execute Hook Support

Language Environment provides the user the capability to establish an exit that gains control when a compiled execute hook (EX) is enabled and executed. The user-provided exit is identified by the HLL user exit (CEEBINT) that is invoked during initialization of the Language Environment environment. Language Environment owns the HLL user exit and provides support for the execute hook exit.

Language Environment initialization:

- Establishes the address of the hook handler entry point
- Sets the hook handler suffix
- Sets the hooks (CAA+X'01A8' thru CAA+X'01F0' for a length of X'48') to X'0700',S(CEECAAUDHOOK)
- Sets the hook handler prefix

If the debugger has been initialized when a hook is enabled and executed, the debugger event handler is invoked with the following interface:

1. Event code 133.
2. A DSA that was in control when the hook was executed.
3. The offset of the hooks within the hook set that was executed (this is a multiple of 4 ranging from 0 to 15 inclusive).
4. DSA format.
5. A buffer containing general purpose registers.
6. Return address to the routine that was interrupted.
7. Entry point to the routine that was interrupted.

In addition, R12 points to the CAA.

To enable a particular execute hook, set the first 2 bytes of the hook to X'45C0'. To disable a particular execute hook, set the first 2 bytes of the hook to X'0700'. No other values should be used for these first 2 bytes.

Performance Analysis Support

This section describes Language Environment's support for performance analysis, or profiler tools. You can use a profiler tool to determine the performance level of an application; for example, trace data from a profiler tool can reveal the areas of an application that require the most processing time.

The C/C++ Performance Analyzer is available with the IBM C/C++ Productivity Tools for OS/390 product. Use the Performance Analyzer to help analyze, understand, and tune your C and C++ applications for improved performance.

Profile Tool Event Handler

The profile event handler must be loadable by Language Environment with the name CEEEVPRF. The profiler event handler is loaded and initialized if the PROFILE run-time option is in effect and the TEST run-time option is not specified. (If the TEST run-time option is specified, the PROFILE run-time option is ignored and a profiler tool will not be loaded.) A load failure will occur if Language Environment cannot find the CEEEVPRF routine or if the routine is not available.

The CEEPCBPRFEH field of the PCB contains the address of the profiler event handler. Language Environment uses this address to notify the profiler tool of certain events. These events, which are described in Table 29, are a subset of the notifications and parameters that Language Environment passes to the debug tool event handler.

Table 29. Profile Tool — Language Environment Event Handler Interface

Profile Tool Event	Profile Tool Event Code	Parm 2	Parm 3	Parm 4
Condition raised	101	CIB	result code	
Unhandled condition	103	CIB	result code	
Enclave init	118	creator's EDB		
Enclave term	119			
Thread init	120	creator's CAA		
Profile tool term	121			
Thread term	122			
External entry	123	DSA address (see note)	profiler invocation string	• Parm 4 = INPL • Parm 5 = DSA format
Condition promote	127	CIB	result code	

Table 29. Profile Tool — Language Environment Event Handler Interface (continued)

Profile Tool Event	Profile Tool Event Code	Parm 2	Parm 3	Parm 4
Execution Hook invocation	133	• Parm 2 = DSA • Parm 3 = hook offset • Parm 4 = DSA format • Parm 5 = A buffer containing general purpose registers • Parm 6 = Return address to the routine that was interrupted • Parm 7 = Entry point to the routine that was interrupted • Parm 8 = Eight-byte clock value returned by the STORE Clock (STCK) instruction • Parm 9 = Eight-byte elapsed CPU time in microseconds returned by the TIMEUSED assembler service		
Initial thread create	160	initial thread_id	nil	stack_size
Initial thread exit	161	initial thread_id		
Pthread create	162	creating thread_id	created thread_id	stack_size
Pthread created	163	created thread_id	nil	stack_size
Pthread exit	164	created thread_id		
POSIX fork() imminent	171			
In child process	172			
POSIX exec() imminent	173			
Process clean up imminent	174			
Spawn is imminent	175			
In parent process	178			
After spawn()	179			

Note: This is the requestor's DSA, which means an HLL library routine DSA is likely the requestor of the Language Environment service or user DSA.

CAA
A fullword binary integer that contains the address of the CAA.

CIB
A fullword binary integer that contains the address of the CIB.

DSA
A fullword binary integer that contains the address of the DSA.

EDB
A fullword binary integer that contains the address of the EDB.

Hook offset
A fullword binary integer that contains the offset of the hook that was executed within the hook set. (This value is a multiple of 4 ranging from 0 to 52 inclusive.)

DSA format
A fullword binary integer set to one of the following:
0 The format of the DSA is a standard OS linkage register save area (with/without Language Environment fields including NAB).
1 The format of the DSA is XPLINK style.

General purpose registers
A 64-byte buffer containing the general purpose registers stored in order 0 to 15 at the time the debug hook was executed. If the debugger changes these register values, the new values will be used when control is returned to the routine that executed the debug hook.

return_address
A fullword pointer containing the address of the instruction where control will be returned to the routine that executed the debug hook. If the debugger changes this address, control will be returned to the new location.

entry_ptr
A fullword pointer containing the address of the entry point of the routine that contains the debug hook.

result code
A fixed(31) binary value action for condition manager to take. The supported values are:
- 110 — Resume at the resume cursor
- 120 — Percolate to next condition handler

storage length
A fixed(31) binary value containing the number of bytes of storage.

profiler invocation string
A halfword-prefixed string that contains the invocation string of the profiler tool. This value, which is specified as the *string* parameter of the PROFILE run-time option, it is translated to upper case characters. For more information about the run-time option, see *z/OS Language Environment Programming Reference*.

INPL
The Initialization Parameter List as passed to CEEINT. For the format of the INPL, see Figure 55 on page 143.

thread_id
An 8-byte thread identifier.

stack_size
A stack size attribute (in bytes) of initial or created thread.

nil Unused; null pointer.

Language Environment Actions for Profiler

Language Environment parses the PROFILE run-time option on behalf of the profile tool and sets the appropriate flags and profiler invocation string with the Options Control Block (OCB). If the TEST run-time option has also been specified, Language Environment issues a message to indicate that the TEST option will take precedence; that is, Language Environment will load the specified debug tool and will not load the specified profiler tool. If the NOTEST run-time option is specified, Language Environment loads module CEEEVPRF and stores the entry point address in the PCB (field CEEPCBPRFEH).

Chapter 10. DFSORT Interface

This chapter describes and discusses the DFSORT interface. Note that whenever DFSORT is mentioned, an equivalent sort product can be used.

DFSORT Interface Description

Typically, an implicit enclave boundary occurs when an application issues an SVC LINK. However, this is not the case when DFSORT is invoked directly; that is, Language Environment will create a new enclave for DFSORT. To simplify calls to DFSORT, Language Environment concentrates the logic of the DFSORT invocation into the Language Environment service CEE3SRT.

When CEE3SRT is invoked, the routine acquires a new stack frame and some flags are set to indicate DFSORT invocation. As a result, the path length is slightly longer than if your application used LINK SVC to invoke DFSORT directly. However, when you invoke CEE3SRT, the routine also establishes exit DSAs and calls DFSORT using defined interfaces, which are described in the *DFSORT Application Programming Guide R14*.

Language Environment supports the DFSORT Extended Parameter List, which allows parameters to be placed above the 16M line. DFSORT Version 1 Release 1.1 or later is required for Extended Parameter List support.

CEE3SRT — Call DFSORT

This CWI interface establishes an exit DSA and call DFSORT.

Syntax

void CEE3SRT (*dfsort_extended_plist*, *ret_code*)

```
STRUCT    *dfsort_extended_plist;
INT4      *ret_code;
```

CEE3SRT

Call this CWI interface as follows:

```
L      R12,A(CAA)            Get the address of CAA in R12
L      R15,CEECAACELV-CEECAA(,R12)
L      R15,2916(,R15)
BALR  R14,R15
```

dfsort_plist

The address of the Extended Parameter List that is passed to DFSORT. The DFSORT Extended Parameter List is shown in Figure 73 on page 336. Language Environment reserves the use of the address of the ESTAE area pointer (+X'14' into the extended parameter list). Language Environment gets the exit address to establish the environment for the member-specified exit, before this exit gets control. It is the caller's responsibility to adhere to the DFSORT interface, as described in the *DFSORT Application Programming Guide R14*.

ret_code

The return code from the DFSORT invocation which is contained within R15 upon return from DFSORT. Refer to the DFSORT library for detailed information

© Copyright IBM Corp. 1991, 2002

on the return codes. It is the CEE3SRT caller's responsibility to manage the DFSORT return code. For example, COBOL would save it in the SORT-RETURN special register.

```
SORTEPL  DSECT
CONTROL  DS    A        Addr of control statements or zero
E15_E32  DS    A        Addr of user exit E15 or E32, or zero
E35      DS    A        Addr of user exit E35 or zero
USER     DS    A        User exit addr constant or zero
ALTSEQ   DS    A        Addr of ALTSEQ translation table or zero
ESTAE    DS    A        Addr of ESTAE area pointer or zero
E18      DS    A        Addr of user exit E18 or zero
E39      DS    A        Addr of user exit E39 or zero
END_MARK DS    F        F'-1' to indicate the end
```

Figure 73. DFSORT's Extended Parameter List

CEE3SRT General Notes

- Identifying restrictions on DFSORT invocation on a per-HLL basis is the responsibility of the particular HLL.
- Language Environment calls DFSORT using SVC LINK while executing under z/OS.
- DFSORT does not run under CICS. Language Environment calls DFSORT using EXEC CICS LOAD and BALR 14,15 while executing under CICS.
- Language Environment only supports E15, E35, and E32 exits.
- The caller of CEE3SRT must provide and manage the DFSORT exit addresses using the extended parameter list. Typically, the address of an exit identifies an HLL library routine which, in turn, calls a user routine. If no user exit routine is needed, a zero can be specified in the extended parameter list.

  Note: Language Environment gets the exit address in the DFSORT PLIST and replaces it with a Language Environment routine so that Language Environment can, among other things, establish R12 and R13 to point to the CAA and a DSA respectively prior to calling the caller's supplied exit.
- When a DFSORT user exit is called, the registers are as follows:
  R1 Address of a parameter list for the particular exit
  R12 Address of the CAA
  R13 Address of a standard DSA-formatted save area with a valid NAB established
  R14 The return address
  R15 Address of the exit's entry point
- Invocation of DFSORT from within a DFSORT user exit is restricted in Language Environment.
- R15 is used to pass return codes back to DFSORT from the user exit.
- The exit address that is passed to CEE3SRT is called, honoring the AMODE bit, and with R12 and R13 established as described above.
- Language Environment uses the ESTAE area pointer. For additional information, see "Error Handling within SORT Exits" on page 337.
- A new enclave is not created when calling DFSORT in z/OS even though an RB boundary is crossed.
- CEE3SRT restores the program mask from the value in the CAA upon return from the call. If the program mask is altered (using CEE3SPM or a dynamic call) in the DFSORT user exit, the effect persists upon return from DFSORT.

ILC within SORT Exits

Inter-language communication (ILC) is allowed within the DFSORT user exit, as long as the ILC is performed within the same load module. ILC is not permitted in dynamically loaded routines.

Error Handling within SORT Exits

Language Environment terminates all routines up to the routine that called DFSORT (using CEE3SRT) for all abends. Neither HLL condition handlers nor user handlers established within the DFSORT exit is driven for abends occurring within DFSORT or the DFSORT exit.

When a condition is raised by an abend, the handle cursor and the resume cursor are set to the return point following the call to CEE3SRT. The information in the CIB contains the information on the condition that was raised in the sort exit and an indication that the condition occurred while in DFSORT (including the USER DFSORT exit). The current invocation of DFSORT is terminated and error handling starts with the stack frame of the caller of CEE3SRT.

Conditions raised either by CEESGL or by a program interrupt continues to operate in the same manner, independent of the CEE3SRT call. However, when the resume cursor is moved to a stack frame that precedes the CEE3SRT stack frame, Language Environment terminates the DFOSRT invocation.

Messages and Conditions

The following conditions can arise during the invocation of CEE3SRT:

CEE35L	Severity	4
	Msg_No	3253
	Message	Catastrophic exception raised within the CEE3SRT invocation.
CEE35M	Severity	4
	Msg_No	3254
	Message	Incorrect DFSORT PLIST passed to CEE3SRT.
CEE35N	Severity	4
	Msg_No	3255
	Message	Attempt to invoke CEE3SRT from within a DFSORT exit.

Chapter 11. Math Library

The interface conventions provided by the Language Environment math service library routines are:
- Scalar routines callable service call
- Scalar routines CWI for all HLLs

Language Environment math service library consists of two logical libraries. All routines in one library are called with the callable service interface. All routines in the other library are called using the CWI interface. When a condition is encountered in the callable service invocation, the condition token is constructed. If the caller specifies to receive the condition token, control is returned to the caller. If the caller does not specify to receive the condition token, it is presented to the condition handler for processing. When a condition is encountered in the CWI invocation the language-specific condition handlers are called to handle it. These condition handling rules are the same for software and hardware detected conditions.

Calling Math Services from an Application

Math services can be called either from HLLs or from assembler, if Language Environment is initialized. There are two ways to call math services:
1. From individual HLLs as that language's own intrinsic math service (CWI or Register CWI)
2. From any HLL or assembler as a callable service

Math Service Condition Handling Requirements

Math services need to satisfy semantic condition handling requirements of all Language Environment members. A condition in a math service is treated differently than a condition elsewhere in either the generated code or in the other routines of the language library. This section lists what special functions are needed by condition handlers that support math services.

Individual programming languages vary widely in handling semantic action in regard to math services. When a condition occurs in a CWI, the condition handling mechanism needs to provide the following information to the condition handler:
- Indication that a condition occurred in a math service
- The name or other identification of the math service
- The type of condition

This information is communicated in the CIB (condition information block) constructed by the math service for software-detected conditions or by the ESTAE exit of the operating system provided by Language Environment for hardware-detected conditions.

Member-Specific Condition Handling

Member language condition handlers needing to do special processing for conditions originated in math services are assisted as follows; if an execution interruption occurred in a math service, CIB_MRC will have one of the following values:

'1'B Indicates math service originated condition.
'0'B Indicates nonmath service condition.

© Copyright IBM Corp. 1991, 2002

Data Types and Their Abbreviations

Table 30 shows the data types used in this section and their abbreviations.

Table 30. Data Types and Their Abbreviations

Data Type Abbreviation	Explanation
R*S	32-bit single floating-point number (hexadecimal)
R*L	64-bit double floating-point number (hexadecimal)
R*E	128-bit extended floating-point number (hexadecimal)
C*S	complex number consisting of two 32-bit single floating-point numbers
C*L	complex number consisting of two 64-bit double floating-point numbers
C*E	complex number consisting of two 128-bit extended floating-point numbers
I*S	32-bit binary integer number
L*S	32-bit logical value
I*J	64-bit binary integer number
I*H	16-bit binary integer number
I*K	8-bit binary integer number
I*U	8-bit unsigned binary integer number

CWI Conventions for Scalar Math Services

The Language Environment math library scalar functions are accessed through a CWI entry point. HLLs invoke math routines at either the CWI conventional interface or at the CWI register interface.

Table 31 on page 341 and Figure 74 on page 341 show supported formats. The first format uses the register interface, where the address of the parameter is placed in a register and the result is in a floating-point register. The second format uses the conventional interface where GPR1 contains the address of the parameter list and the result is returned in storage.

Upon entry, standard Language Environment linkage conventions are assumed:

GPR12
: CAA

GPR13
: Save area

GPR14
: Return address

GPR15
: Entry point

Register Interface

This is a S/370 platform-specific extension. Upon entry, GPR1 contains the address of the first argument, GPR2 contains the address of the second argument, and GPR3 contains the address of the third argument for functions with three arguments as shown in the following figure. The result is returned in the register or registers as shown in Table 32 on page 341.

Table 31. CWI Register Interface Format

One Input Parameter	Two Input Parameters	Three Input Parameters
R1 = @(parm 1)	R1 = @(parm 1)	R1 = @(parm 1)
	R2 = @(parm 2)	R2 = @(parm 2)
		R3 = @(parm 3)

Upon return, registers 4-14 contain the same values as they did when the routine was entered. Registers 2 and 3 are preserved by routines of one input parameter. Register 3 is preserved by routines of two input parameters.

Table 32. Result Registers for Scalar Routines (CWI Register Interface)

Result Data Type	Real Part	Imaginary Part
R*S	FPR0	
R*L	FPR0	
R*E	FPR0,2	
C*S	FPR0	FPR2
C*L	FPR0	FPR2
C*E	FPR0,2	FPR4,6
I*S	GPR0	

Conventional Interface

Upon entry, GPR1 contains address of the parameter list as shown in Figure 74.

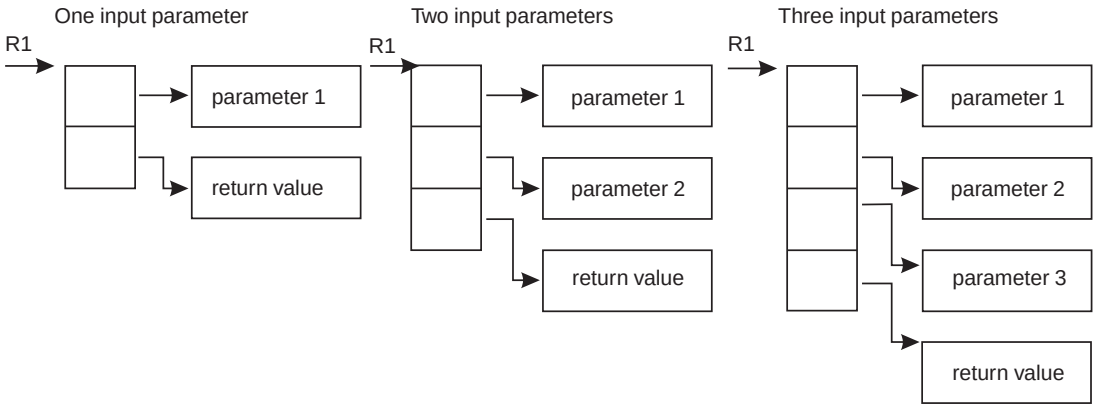

Figure 74. HLL CWI Parameter List Format

Upon return, registers 2-14 contain the same values as they did when the routine was entered.

Condition Token Values for Math Services

Figure 75 on page 342 shows the condition token values.

Severity		Msg_No	C/S/C	Facility ID			
X'00' X'00'	X'00' X'02'	X'0000'	X'00' X'51'	X'00' C	X'00' E	X'00' E	success failure

Facility ID: CEE

Msg_No: see Table 29 on page 222

C/S/C Byte has the following values:

X'51' for failure (severity 2)
X'00' for success

Case		Sev		Control			
0 0	1 0	0 0	1 0	0 0	0 0	1 0	0 0

Figure 75. Condition Token Values for Math Services

Math Services

The Language Environment math services library consists of 239 scalar routines.

Math service entry point names have a specific format. All entry points are 8-character names. The first three characters are always **CEE**. The fourth character is:

S Scalar routine, AWI callable service entry point
T Scalar routine, CWI callable service entry point
9 Scalar routine, register CWI entry point

The fifth character designates the data type of input parameter(s):

I --> I*S
32-bit binary integer number
S --> R*S
32-bit single floating-point number
D --> R*L
64-bit double floating-point number
Q --> R*E
128-bit extended floating-point number
T --> C*S
32-bit single float-complex number
E --> C*L
64-bit double float-complex number
R --> C*E
128-bit extended float-complex number
J --> I*J
64-bit binary integer number
H --> I*H
16-bit binary integer number
K --> I*K
8-bit binary integer number
U --> I*U
8-bit unsigned binary integer number

The last three characters are a mnemonic designating the unique routine.

Scalar Math Services

Table 33. Language Environment Scalar Math Services

Math Operation	Entry Name Callable Service, CWI, Register CWI	Arg Type(s)	Result Type	Algorithm Source	Msg_No
Absolute Function					
	CEE9HABS	I*2	I*2	AFBFABS	*
	CEESIABS CEETIABS CEE9IABS	I*S	I*S	AFBFABS	*
	CEE9JABS	I*L	I*L	AFBFABS	*
	CEESSABS CEETSABS CEE9SABS	R*S	R*S	AFBFABS	*
	CEESDABS CEETDABS CEE9DABS	R*L	R*L	AFBFABS	*
	CEESQABS CEETQABS CEE9QABS	R*E	R*E	AFBFABS	*
	CEESTABS CEETTABS CEE9TABS	C*S	R*S	VSFCSABS	*
	CEESEABS CEETEABS CEE9EABS	C*L	R*L	VSFCLABS	2025
	CEESRABS CEETRABS CEE9RABS	C*E	R*E	AFBCQABS	*
Arccosine					
	CEESSACS CEETSACS CEE9SACS	R*S	R*S	VSFSACOS	2016
	CEESDACS CEETDACS CEE9DACS	R*L	R*L	VSFLACOS	2016
	CEESQACS CEETQACS CEE9QACS	R*E	R*E	AFBQASCN	2016
Arcsine					
	CEESSASN CEETSASN CEE9SASN	R*S	R*S	VSFSASIN	2016
	CEESDASN CEETDASN CEE9DASN	R*L	R*L	VSFLASIN	2016 2025
	CEESQASN CEETQASN CEE9QASN	R*E	R*E	AFBQASCN	2016
Arctangent					
	CEESSATN CEETSATN CEE9SATN	R*S	R*S	VSFSATAN	*
	CEESDATN CEETDATN CEE9DATN	R*L	R*L	VSFLATAN	2025
	CEESQATN CEETQATN CEE9QATN	R*E	R*E	AFBQATN2	*
	CEESTATN CEETTATN CEE9TATN	C*S	C*S	IBMBMKXA	2022
	CEESEATN CEETEATN CEE9EATN	C*L	C*L	IBMBMKYA	2022

Table 33. Language Environment Scalar Math Services (continued)

Math Operation	Entry Name Callable Service, CWI, Register CWI	Arg Type(s)	Result Type	Algorithm Source	Msg_No
	CEESRATN CEETRATN CEE9RATN	C*E	C*E	IBMBMKZA	2022
Arctangent2					
	CEESSAT2 CEETSAT2 CEE9SAT2	R*S R*S	R*S	VSFSATN2	2014
	CEESDAT2 CEETDAT2 CEE9DAT2	R*L R*L	R*L	VSFLATN2	2014 2025
	CEESQAT2 CEETQAT2 CEE9QAT2	R*E R*E	R*E	AFBQATN2	2014
Conjugate of Complex					
	CEESTCJG CEETTCJG CEE9TCJG	C*S	C*S	AFBFCONJ	*
	CEESECJG CEETECJG CEE9ECJG	C*L	C*L	AFBFCONJ	*
	CEESRCJG CEETRCJG CEE9RCJG	C*E	C*E	AFBFCONJ	*
Cosine					
	CEESSCOS CEETSCOS CEE9SCOS	R*S	R*S	VSFSCOS	2017
	CEESDCOS CEETDCOS CEE9DCOS	R*L	R*L	VSFLCOS	2017
	CEESQCOS CEETQCOS CEE9QCOS	R*E	R*E	AFBQSCN	2017
	CEESTCOS CEETTCOS CEE9TCOS	C*S	C*S	AFBCSSCN	2013 2019
	CEESECOS CEETECOS CEE9ECOS	C*L	C*L	AFBCLSCN	2013 2019
	CEESRCOS CEETRCOS CEE9RCOS	C*E	C*E	AFBCQSCN	2013 2019
Cotangent					
	CEESSCTN CEETSCTN CEE9SCTN	R*S	R*S	VSFSCOTN	2002 2017
	CEESDCTN CEETDCTN CEE9DCTN	R*L	R*L	VSFLCOTN	2002 2017
	CEESQCTN CEETQCTN CEE9QCTN	R*E	R*E	AFBQTNCT	2002 2017
Cube Root					
	CEETDCRT	R*L	R*L	new	*
Error Function					
	CEESSERC CEETSERC CEE9SERC	R*S	R*S	AFBSERF	*
	CEESDERC CEETDERC CEE9DERC	R*L	R*L	AFBLERF	*

Table 33. Language Environment Scalar Math Services (continued)

Math Operation	Entry Name Callable Service, CWI, Register CWI	Arg Type(s)	Result Type	Algorithm Source	Msg_No
	CEESQERC CEETQERC CEE9QERC	R*E	R*E	AFBQERF	*
	CEESSERF CEETSERF CEE9SERF	R*S	R*S	AFBSERF	*
	CEESDERF CEETDERF CEE9DERF	R*L	R*L	AFBLERF	*
	CEESQERF CEETQERF CEE9QERF	R*E	R*E	AFBQERF	*
Exponential (base e)					
	CEESSEXP CEETSEXP CEE9SEXP	R*S	R*S	VSFSEXP	2011
	CEESDEXP CEETDEXP CEE9DEXP	R*L	R*L	VSFLEXP	* 2011 2025
	CEESQEXP CEETQEXP CEE9QEXP	R*E	R*E	AFBFQXPQ	2011
	CEESTEXP CEETTEXP CEE9TEXP	C*S	C*S	AFBCSEXP	2009 2015
	CEESEEXP CEETEEXP CEE9EEXP	C*L	C*L	AFBCLEXP	2009 2015
	CEESREXP CEETREXP CEE9REXP	C*E	C*E	AFBCQEXP	2009 2013
Exponentiation (**)					
	CEESDXPD CEETDXPD CEE9DXPD	R*L R*L	R*L	VSFFDXPD	2006 2020 2025
	CEESEXPE CEETEXPE CEE9EXPE	C*L C*L	C*L	AFBFCDCD	2008
	CEESIXPI CEETIXPI CEE9IXPI	I*S I*S	I*S	AFBFIXPI	2003
	CEESSXPI CEETSXPI CEE9SXPI	R*S I*S	R*S	AFBFRXPI	2004
	CEESDXPI CEETDXPI CEE9DXPI	R*L I*S	R*L	AFBFDXPI	2004
	CEESQXPI CEETQXPI CEE9QXPI	R*E I*S	R*E	AFBFQXPI	2004
	CEESTXPI CEETTXPI CEE9TXPI	C*S I*S	C*S	AFBFCXPI	2008
	CEESEXPI CEETEXPI CEE9EXPI	C*L I*S	C*L	AFBFCDXI	2008
	CEESRXPI CEETRXPI CEE9RXPI	C*E I*S	C*E	AFBFCQXI	2008
	CEE9JXPI	I*L I*S	I*L	AFBF8XPI	2003
	CEE9IXPJ	I*S I*L	I*S	AFBFIXP8	2003
	CEE9JXPJ	I*L I*L	I*L	AFBF8XP8	2003
	CEE9SXPJ	R*S I*L	R*S	AFBFRXP8	2004

Table 33. Language Environment Scalar Math Services (continued)

Math Operation	Entry Name Callable Service, CWI, Register CWI	Arg Type(s)	Result Type	Algorithm Source	Msg_No
	CEE9DXPJ	R*L I*L	R*L	AFBFDXP8	2004
	CEE9QXPJ	R*E I*L	R*E	AFBFQXP8	2004
	CEE9TXPJ	C*S I*L	C*S	AFBFCXP8	2008
	CEE9EXPJ	C*L I*L	C*L	AFBFCDX8	2008
	CEE9RXPJ	C*E I*L	C*E	AFBFCQX8	2008
	CEESQXPQ CEETQXPQ CEE9QXPQ	R*E R*E	R*E	AFBFQXPQ	2020 2021
	CEESRXPR CEETRXPR CEE9RXPR	C*E C*E	C*E	AFBFCQCQ	2008
	CEESSXPS CEETSXPS CEE9SXPS	R*S R*S	R*S	VSFFRXPR	2006 2020
	CEESTXPT CEETTXPT CEE9TXPT	C*S C*S	C*S	AFBFCXPC	2008
	CEESQXP2 CEETQXP2 CEE9QXP2	R*E	R*E	AFBFQXPQ	2007
Exp(x)-1					
	CEETDEM1	R*L	R*L	new	2011
Floating Complex Divide					
	CEESTDVD CEETTDVD CEE9TDVD	C*S C*S	C*S	VSFCSAD	*
	CEESEDVD CEETEDVD CEE9EDVD	C*L C*L	C*L	VSFCLAD	*
	CEESRDVD CEETRDVD CEE9RDVD	C*E C*E	C*E	AFBCQRIT	*
Floating Complex Multiply					
	CEESTMLT CEETTMLT CEE9TMLT	C*S C*S	C*S	AFBCSAM	*
	CEESEMLT CEETEMLT CEE9EMLT	C*L C*L	C*L	AFBCLAM	*
	CEESRMLT CEETRMLT CEE9RMLT	C*E C*E	C*E	AFBCQRIT	*
Gamma Function					
	CEESSGMA CEETSGMA CEE9SGMA	R*S	R*S	AFBSGAMA	2005
	CEESDGMA CEETDGMA CEE9DGMA	R*L	R*L	AFBLGAMA	2005
Hyperbolic Arccosine					
	CEETDACH	R*L	R*L	new	2010
Hyperbolic Arcsine					
	CEETDASH	R*L	R*L	new	*
Hyperbolic Arctangent					
	CEESSATH CEETSATH CEE9SATH	R*S	R*S	IBMBMLSA	2017

Table 33. Language Environment Scalar Math Services (continued)

Math Operation	Entry Name Callable Service, CWI, Register CWI	Arg Type(s)	Result Type	Algorithm Source	Msg_No
	CEESDATH CEETDATH CEE9DATH	R*L	R*L	IBMBMLLA	2017
	CEESQATH CEETQATH CEE9QATH	R*E	R*E	IBMBMLEA	2017
	CEESTATH CEETTATH CEE9TATH	C*S	C*S	IBMBMKXA	2022
	CEESEATH CEETEATH CEE9EATH	C*L	C*L	IBMBMKYA	2022
	CEESRATH CEETRATH CEE9RATH	C*E	C*E	IBMBMKZA	2022
Hyperbolic Cosine					
	CEESSCSH CEETSCSH CEE9SCSH	R*S	R*S	VSFSCOSH	2016
	CEESDCSH CEETDCSH CEE9DCSH	R*L	R*L	AFBLSCNH	2016
	CEESQCSH CEETQCSH CEE9QCSH	R*E	R*E	AFBQSCNH	2016
	CEESTCSH CEETTCSH CEE9TCSH	C*S	C*S	IBMBMGXA	*
	CEESECSH CEETECSH CEE9ECSH	C*L	C*L	IBMBMGYA	*
	CEESRCSH CEETRCSH CEE9RCSH	C*E	C*E	IBMBMGZA	*
Hyperbolic Sine					
	CEESSSNH CEETSSNH CEE9SSNH	R*S	R*S	VSFSSINH	2016
	CEESDSNH CEETDSNH CEE9DSNH	R*L	R*L	AFBLSCNH	2016
	CEESQSNH CEETQSNH CEE9QSNH	R*E	R*E	AFBQSCNH	2016
	CEESTSNH CEETTSNH CEE9TSNH	C*S	C*S	IBMBMGXA	*
	CEESESNH CEETESNH CEE9ESNH	C*L	C*L	IBMBMGYA	*
	CEESRSNH CEETRSNH CEE9RSNH	C*E	C*E	IBMBMGZA	*
Hyperbolic Tangent					
	CEESSTNH CEETSTNH CEE9STNH	R*S	R*S	VSFSTANH	*
	CEESDTNH CEETDTNH CEE9DTNH	R*L	R*L	AFBLTANH	*
	CEESQTNH CEETQTNH CEE9QTNH	R*E	R*E	AFBQTANH	*
	CEESTTNH CEETTTNH CEE9TTNH	C*S	C*S	IBMBMHXA	*

Table 33. Language Environment Scalar Math Services (continued)

Math Operation	Entry Name Callable Service, CWI, Register CWI	Arg Type(s)	Result Type	Algorithm Source	Msg_No
	CEESETNH CEETETNH CEE9ETNH	C*L	C*L	IBMBMHYA	*
	CEESRTNH CEETRTNH CEE9RTNH	C*E	C*E	IBMBMHZA	*
Imaginary part of Complex					
	CEESTIMG CEETTIMG CEE9TIMG	C*S	R*S	AFBFIMAG	*
	CEESEIMG CEETEIMG CEE9EIMG	C*L	R*L	AFBFIMAG	*
	CEESRIMG CEETRIMG CEE9RIMG	C*E	R*E	AFBFIMAG	*
Load exponent					
	CEETDSCB	R*L I*S	R*L	new	2024 2025
Logarithm Base e					
	CEESSLOG CEETSLOG CEE9SLOG	R*S	R*S	VSFSLGN	2012
	CEESDLOG CEETDLOG CEE9DLOG	R*L	R*L	VSFLLGN	2012
	CEESQLOG CEETQLOG CEE9QLOG	R*E	R*E	AFBFQXPQ	2012
	CEESTLOG CEETTLOG CEE9TLOG	C*S	C*S	AFBCSLOG	2018
	CEESELOG CEETELOG CEE9ELOG	C*L	C*L	AFBCLLOG	2018
	CEESRLOG CEETRLOG CEE9RLOG	C*E	C*E	AFBCQLOG	2018
Logarithm Base 10					
	CEESSLG1 CEETSLG1 CEE9SLG1	R*S	R*S	VSFSLGC	2012
	CEESDLG1 CEETDLG1 CEE9DLG1	R*L	R*L	VSFLLGC	2012
	CEESQLG1 CEETQLG1 CEE9QLG1	R*E	R*E	AFBFQXPQ	2012
Logarithm Base 2					
	CEESSLG2 CEETSLG2 CEE9SLG2	R*S	R*S	IBMBMDSA	2012
	CEESDLG2 CEETDLG2 CEE9DLG2	R*L	R*L	IBMBMDLA	2012
	CEESQLG2 CEETQLG2 CEE9QLG2	R*E	R*E	IBMBMYEA	2012
$Log_e(1.0 + x)$					
	CEETDL1P	R*L	R*L	new	2012
Log Gamma Function					

Table 33. Language Environment Scalar Math Services (continued)

Math Operation	Entry Name Callable Service, CWI, Register CWI	Arg Type(s)	Result Type	Algorithm Source	Msg_No
	CEESSLGM CEETSLGM CEE9SLGM	R*S	R*S	AFBSGAMA	2005
	CEESDLGM CEETDLGM CEE9DLGM	R*L	R*L	new	2005 2031
Modular Arithmetic					
	CEE9HMOD	I*2 I*2	I*2	AFBFMODI	*
	CEESIMOD CEETIMOD CEE9IMOD	I*S I*S	I*S	AFBFMODI	*
	CEE9JMOD	I*L I*L	I*L	AFBFMODI	*
	CEESSMOD CEETSMOD CEE9SMOD	R*S R*S	R*S	VSFFMODR	*
	CEESDMOD CEETDMOD CEE9DMOD	R*L R*L	R*L	VSFFMODR	*
	CEESQMOD CEETQMOD CEE9QMOD	R*E R*E	R*E	VSFFMODR	*
Nearest Integer					
	CEESSNIN CEETSNIN CEE9SNIN	R*S	I*S	AFBFNINT	*
	CEESDNIN CEETDNIN CEE9DNIN	R*L	I*S	AFBFNINT	*
	CEE9QNIN	R*E	I*S	AFBFNINT	*
	CEE9SNJN	R*S	I*L	AFBFNINT	*
	CEE9DNJN	R*L	I*L	AFBFNINT	*
	CEE9QNJN	R*E	I*L	AFBFNINT	*
Nearest Whole Number					
	CEE9QNWN	R*E	R*E	AFBFNINT	*
	CEESSNWN CEETSNWN CEE9SNWN	R*S	R*S	AFBFNINT	*
	CEESDNWN CEETDNWN CEE9DNWN	R*L	R*L	AFBFNINT	*
Nextafter					
	CEETDNXA	R*L	R*L	new	*
Positive Difference					
	CEE9HDIM	I*2 I*2	I*2	AFBFDIM	*
	CEESIDIM CEETIDIM CEE9IDIM	I*S I*S	I*S	AFBFDIM	*
	CEE9JDIM	I*L I*L	I*L	AFBFDIM	*
	CEESSDIM CEETSDIM CEE9SDIM	R*S R*S	R*S	AFBFDIM	*
	CEESDDIM CEETDDIM CEE9DDIM	R*L R*L	R*L	AFBFDIM	*
	CEESQDIM CEETQDIM CEE9QDIM	R*E R*E	R*E	AFBFDIM	*

Table 33. Language Environment Scalar Math Services (continued)

Math Operation	Entry Name Callable Service, CWI, Register CWI	Arg Type(s)	Result Type	Algorithm Source	Msg_No
Remainder					
	CEETDREM	R*L R*L	R*L	new	2030
Sine					
	CEESSSIN CEETSSIN CEE9SSIN	R*S	R*S	VSFSSIN	2017
	CEESDSIN CEETDSIN CEE9DSIN	R*L	R*L	VSFLSIN	2017 2025
	CEESQSIN CEETQSIN CEE9QSIN	R*E	R*E	AFBQSCN	2017
	CEESTSIN CEETTSIN CEE9TSIN	C*S	C*S	AFBCSSCN	2013 2019
	CEESESIN CEETESIN CEE9ESIN	C*L	C*L	AFBCLSCN	2013 2019
	CEESRSIN CEETRSIN CEE9RSIN	C*E	C*E	AFBCQSCN	2013 2019
Square Root					
	CEESSSQT CEETSSQT CEE9SSQT	R*S	R*S	VSFSSQRT	2010
	CEESDSQT CEETDSQT CEE9DSQT	R*L	R*L	VSFLSQRT	2010
	CEESQSQT CEETQSQT CEE9QSQT	R*E	R*E	AFBQSQRT	2010
	CEESTSQT CEETTSQT CEE9TSQT	C*S	C*S	AFBCSSQT	*
	CEESESQT CEETESQT CEE9ESQT	C*L	C*L	AFBCLSQT	*
	CEESRSQT CEETRSQT CEE9RSQT	C*E	C*E	AFBCQSQT	*
Tangent					
	CEESSTAN CEETSTAN CEE9STAN	R*S	R*S	VSFSTAN	2017
	CEESDTAN CEETDTAN CEE9DTAN	R*L	R*L	VSFLTAN	2017 2025
	CEESQTAN CEETQTAN CEE9QTAN	R*E	R*E	AFBQTNCT	2002 2017
	CEESTTAN CEETTTAN CEE9TTAN	C*S	C*S	IBMBMHXA	*
	CEESETAN CEETETAN CEE9ETAN	C*L	C*L	IBMBMHYA	*
	CEESRTAN CEETRTAN CEE9RTAN	C*E	C*E	IBMBMHZA	*
Transfer of Sign					
	CEE9HSGN	I*2 I*2	I*2	AFBFSIGN	*

Table 33. Language Environment Scalar Math Services (continued)

Math Operation	Entry Name Callable Service, CWI, Register CWI	Arg Type(s)	Result Type	Algorithm Source	Msg_No
	CEE9JSGN	I*L I*L	I*L	AFBFSIGN	*
	CEESISGN CEETISGN CEE9ISGN	I*S I*S	I*S	AFBFSIGN	*
	CEESSSGN CEETSSGN CEE9SSGN	R*S R*S	R*S	AFBFSIGN	*
	CEESDSGN CEETDSGN CEE9DSGN	R*L R*L	R*L	AFBFSIGN	*
	CEESQSGN CEETQSGN CEE9QSGN	R*E R*E	R*E	AFBFSIGN	*
Truncation					
	CEESSINT CEETSINT CEE9SINT	R*S	R*S	AFBFAINT	*
	CEESDINT CEETDINT CEE9DINT	R*L	R*L	AFBFAINT	*
	CEESQINT CEETQINT CEE9QINT	R*E	R*E	AFBFAINT	*
Unbiased exponent					
	CEETILGB	R*L	I*S	new	2029
	CEETDLGB	R*L	R*L	new	2029

Notes

- Msg_No is a decimal value identifying a given condition. Routines that do not raise conditions have an asterisk (*) in the Msg_No column.
- The implementation of several math services involved calls to other math services. These called math services can generate conditions and messages.

Degree Input/Output Trig Functions

Table 34. Degree Input/Output Trig Functions

Math Operation	Entry Name Callable Service, CWI, Register CWI	Arg Type(s)	Result Type	Algorithm Source	Msg_No
Sine					
	CEETSSND CEE9SSND	R*S	R*S	IBMRMGSB	*
	CEETDSND CEE9DSND	R*L	R*L	IBMRMGLB	*
	CEETQSND CEE9QSND	R*E	R*E	IBMRMGEB	*
Cosine					
	CEETSCSD CEE9SCSD	R*S	R*S	IBMRMGSD	*
	CEETDCSD CEE9DCSD	R*L	R*L	IBMRMGLD	*
	CEETQCSD CEE9QCSD	R*E	R*E	IBMRMGED	*
Tangent					

Table 34. Degree Input/Output Trig Functions (continued)

Math Operation	Entry Name Callable Service, CWI, Register CWI	Arg Type(s)	Result Type	Algorithm Source	Msg_No
	CEETSTND CEE9STND	R*S	R*S	IBMRMHSB	*
	CEETDTND CEE9DTND	R*L	R*L	IBMRMHLB	*
	CEETQTND CEE9QTND	R*E	R*E	IBMRMHEB CEEIQTND	*
Arcsine					
	CEE9SASD	R*S	R*S	CEEISASN	2016
	CEE9DASD	R*L	R*L	CEEIDASN	2016 2025
	CEE9QASD	R*E	R*E	CEEIQASN	2016
Arccosine					
	CEE9SACD	R*S	R*S	CEEISACS	2016
	CEE9DACD	R*L	R*L	CEEIDACS	2016
	CEE9QACD	R*E	R*E	CEEIQACS	2016
Arctangent					
	CEETSATD CEE9SATD	R*S	R*S	IBMRMKSB	*
	CEETDATD CEE9DATD	R*L	R*L	IBMRMKLB	2025
	CEETQATD CEE9QATD	R*E	R*E	IBMRMKEB	*
Arctangent 2					
	CEETSA2D CEE9SA2D	R*S R*S	R*S	IBMRMKSD	2014
	CEETDA2D CEE9DA2D	R*L R*L	R*L	IBMRMKLD	2014 2025
	CEETQA2D CEE9QA2D	R*E R*E	R*E	IBMRMKED	2014

Entry Point Names for Scalar Bit Manipulation Routines

Table 35 summarizes the entry point names, the parameter types, and the result types for the scalar bit manipulation routines.

Table 35. Language Environment Scalar Bit Manipulation Routines

Math Operation	Entry Name Callable Service, CWI, Register CWI	Arg Type(s)	Result Type	Algorithm Source	Msg_No
Bit Shift					
	CEESISHF CEETISHF CEE9ISHF	I*S I*S	I*S	AFBBTSHS	2028
	CEE9JSHF	I*L I*L	I*L	AFBBTSH8	2028
	CEE9KSHF	I*1 I*1	I*1	AFBBTSH1	2028
	CEE9HSHF	I*2 I*2	I*2	AFBBTSH2	2028
	CEE9USHF	U*1 U*1	U*1	AFBBTSH1	2028
Left Shift					
	CEE9ILSH	I*S I*S	I*S	AFBBTSHS	2028
	CEE9JLSH	I*L I*L	I*L	AFBBTSH8	2028
	CEE9KLSH	I*1 I*1	I*1	AFBBTSH1	2028

Table 35. Language Environment Scalar Bit Manipulation Routines (continued)

Math Operation	Entry Name Callable Service, CWI, Register CWI	Arg Type(s)	Result Type	Algorithm Source	Msg_No
	CEE9HLSH	I*2 I*2	I*2	AFBBTSH2	2028
	CEE9KLSH	U*1 U*1	U*1	AFBBTSH1	2028
Right Shift					
	CEE9IRSH	I*S I*S	I*S	AFBBTSHS	2028
	CEE9JRSH	I*L I*L	I*L	AFBBTSH8	2028
	CEE9KRSH	I*1 I*1	I*1	AFBBTSH1	2028
	CEE9HRSH	I*2 I*2	I*2	AFBBTSH2	2028
	CEE9KRSH	U*1 U*1	U*1	AFBBTSH1	2028
Bit Clear					
	CEESICLR CEETICLR CEE9ICLR	I*S I*S	I*S	AFBBTSHS	2028
	CEE9JCLR	I*L I*L	I*L	AFBBTSH8	2028
	CEE9KCLR	I*1 I*1	I*1	AFBBTSH1	2028
	CEE9HCLR	I*2 I*2	I*2	AFBBTSH2	2028
	CEE9KCLR	U*1 U*1	U*1	AFBBTSH1	2028
Bit Set					
	CEESISET CEETISET CEE9ISET	I*S I*S	I*S	AFBBTSHS	2028
	CEE9JSET	I*L I*L	I*L	AFBBTSH8	2028
	CEE9KSET	I*1 I*1	I*1	AFBBTSH1	2028
	CEE9HSET	I*2 I*2	I*2	AFBBTSH2	2028
	CEE9KSET	U*1 U*1	U*1	AFBBTSH1	2028
Bit Test					
	CEESITST CEETITST CEE9ITST	I*S I*S	I*S	AFBBTSHS	2028
	CEE9JTST	I*L I*L	I*S	AFBBTSH8	2028
	CEE9KTST	I*1 I*1	I*S	AFBBTSH1	2028
	CEE9HTST	I*2 I*2	I*S	AFBBTSH2	2028
	CEE9KTST	U*1 U*1	I*S	AFBBTSH1	2028
	CEE9ITJT	I*S I*S	I*L	AFBBTSHS	2028
	CEE9JTJT	I*L I*L	I*L	AFBBTSH8	2028
	CEE9KTJT	I*1 I*1	I*L	AFBBTSH1	2028
	CEE9HTJT	I*2 I*2	I*L	AFBBTSH2	2028
	CEE9KTJT	U*1 U*1	I*L	AFBBTSH1	2028

Message ID — Message Text for Math Library

The following symbolic parameters are used in the table:

rtn_name
The name of the routine which issued the message. Usually there is one routine for each combination of input and output data types. Look up the routine to determine valid data types for a particular routine.

limit Contains the limit value for a given routine. For details, see Table 37 on page 355.

range Contains the range values (lower and upper limits) for a given routine. For details, see Table 37 on page 355.

Table 36. Math Message_IDs

Msg_No	Msg_ID	Explanation
2002	CEE1UI	The argument value is too close to one of the singularities (plus or minus pi/2, plus or minus 3pi/2, ... for the tangent; or plus or minus pi, plus or minus 2pi, ... for the cotangent) in math service *rtn_name*.
2003	CEE1UJ	For an exponentiation operation (I**J) where I and J are integers, I is equal to zero and J is less than or equal to zero in math service *rtn_name*.
2004	CEE1UK	For an exponentiation operation (R**I) where R is real and I is integer, R is equal to zero and I is less than or equal to zero in math service *rtn_name*.
2005	CEE1UL	The value of the argument is outside the valid range *range* in math service *rtn_name*.
2006	CEE1UM	For an exponentiation operation (R**S) where R and S are real values, R is equal to zero and S is less than or equal to zero in math service *rtn_name*.
2007	CEE1UN	The exponent exceeds *limit* in math service *rtn_name*.
2008	CEE1UO	For an exponentiation operation (Z**P) where the complex base Z equals zero, the real part of the complex exponent P, or the integer exponent P, is less than or equal to zero in math service *rtn_name*.
2009	CEE1UP	The value of the real part of the argument is greater than *limit* in math service *rtn_name*.
2010	CEE1UQ	The argument is less than *limit* in math service *rtn_name*.
2011	CEE1UR	The argument is greater than *limit* in math service *rtn_name*.
2012	CEE1US	The argument is less than or equal to *limit* in math service *rtn_name*.
2013	CEE1UT	The absolute value of the imaginary part of the argument is greater than *limit* in math service *rtn_name*.
2014	CEE1UU	Both arguments are equal to *limit* in math service *rtn_name*.
2015	CEE1UV	The absolute value of the imaginary part of the argument is greater than or equal to *limit* in math service *rtn_name*.
2016	CEE1V0	The absolute value of the argument is greater than *limit* in math service *rtn_name*.

Table 36. Math Message_IDs (continued)

Msg_No	Msg_ID	Explanation
2017	CEE1V1	The absolute value of the argument is greater than or equal to *limit* in math service *rtn_name*.
2018	CEE1V2	The real and imaginary parts of the argument are equal to *limit* in math service *rtn_name*.
2019	CEE1V3	The absolute value of the real part of the argument is greater than or equal to *limit* in math service *rtn_name*.
2020	CEE1V4	For an exponentiation operation (R**S) where R and S are real values, either R is equal to zero and S is negative or R is negative and S is not an integer whose absolute value is less than or equal to *limit* in math service *rtn_name*.
2021	CEE1V5	For an exponentiation operation (X**Y) the argument combination of Y*$\log_2$(X) generates a number greater than or equal to *limit* in math service *rtn_name*.
2022	CEE1V6	The value of the argument is plus or minus *limit* in math service *rtn_name*.
2024	CEE1V8	Overflow has occurred in the calculation in math routine *rtn_name*.
2025	CEE1V9	An underflow has occurred in math service *rtn_name*.
2028	CEE1VC	The value of the second argument was outside the valid range *limit* in math service *rtn_name*.
2029	CEE1VD	The value of the argument was equal to *limit* in math routine *rtn_name*.
2030	CEE1VE	The value of the second argument was equal to *limit* in math routine *rtn_name*.
2031	CEE1VF	The value of the argument was a nonpositive whole number in math routine *rtn_name*.
2040	CEE1VO	The value of the third argument was outside the valid range *limit* in math routine *rtn_name*.
2041	CEE1VP	The absolute value of the second argument was greater than either the value of the third argument or the number of bits in the first argument in math routine *rtn_name*.
2042	CEE1VQ	The sum of the second and the third arguments was greater than the number of bits in the first argument in math routine *rtn_name*.
2043	CEE1VR	The value of the second or third argument was less than 0 in math routine *rtn_name*.

Language Environment Math Services — Value of Inserts

Table 37. Language Environment Math Services - Value of Inserts

Msg_No	Callable Service or CWI	Value of Insert (Limit or Range)
2002	CEESSCTN CEESQTAN CEESDCTN CEESQCTN	NULL
2003	CEESIXPI	NULL

Table 37. Language Environment Math Services - Value of Inserts (continued)

Msg_No	Callable Service or CWI	Value of Insert (Limit or Range)
2004	CEESSXPI CEESDXPI CEESQXPI	NULL
2005	CEESSGMA CEESDGMA	2**-252 < X < 57.5744
2005	CEESSLGM CEESDLGM	0 < X < 4.2937*10**73
2006	CEESSXPS CEESDXPD	NULL
2007	CEESQXP2	252
2008	CEESTXPI CEESEXPI CEESRXPI CEESTXPT CEESEXPE CEESRXPR	NULL
2009	CEESTEXP CEESEEXP CEESREXP	174.673
2010	CEESSSQT CEESDSQT CEESQSQT	0
2011	CEESSEXP CEESDEXP CEESQEXP	174.673
2012	CEESSLOG CEESDLOG CEESQLOG CEESSLG1 CEESDLG1 CEESQLG1 CEESSLG2 CEESDLG2 CEESQLG2	0
2013	CEESTSIN CEESESIN CEESRSIN CEESTCOS CEESECOS CEESRCOS	174.673
2013	CEESREXP	2**100
2014	CEESSAT2 CEESDAT2 CEESQAT2	0
2015	CEESTEXP	pi*(2**18) (pi*(2**18) = .823 550 E +06)
2015	CEESEEXP	pi*(2**50) (pi*(2**50) = .353 711 887 601 422 01D +16)
2016	CEESSASN CEESDASN CEESQASN CEESSACS CEESDACS CEESQACS	1
2016	CEESSSNH CEESDSNH CEESQSNH CEESSCSH CEESDCSH CEESQCSH	175.366
2017	CEESSSIN CEESSCOS CEESSTAN CEESSCTN	pi*(2**18) (pi*(2**18) = .823 550 E +06)
2017	CEESDSIN CEESDCOS CEESDTAN CEESDCTN	pi*(2**50) (pi*(2**50) = .353 711 887 601 422 01D +16)
2017	CEESQSIN CEESQCOS CEESQTAN CEESQCTN	2**100
2017	CEESSATH CEESDATH CEESQATH	1
2018	CEESTLOG CEESELOG CEESRLOG	0
2019	CEESTSIN CEESTCOS	pi*(2**18) (pi*(2**18) = .823 550 E +06)
2019	CEESRSIN CEESRCOS	2**100

Table 37. Language Environment Math Services - Value of Inserts (continued)

Msg_No	Callable Service or CWI	Value of Insert (Limit or Range)
2019	CEESESIN CEESECOS	pi*(2**50) (pi*(2**50) = .353 711 887 601 422 01D +16)
2020	CEESSXPS	16 ** 6 - 1
2020	CEESDXPD	16 ** 14 - 1
2020	CEESQXPQ	16 ** 28 - 1
2021	CEESQXPQ	252
2022	CEESTATN CEESEATN CEESRATN	1i
2022	CEESTATH CEESEATH CEESRATH	1
2024	CEETDSCB	NULL
2025	CEESDASN CEESDATN CEESDAT2 CEESDEXP CEESDSIN CEESDTAN CEESDXPD CEESEABS	NULL
2028	CEESISHF CEETISHF CEE9ISHF CEE9JSHF CEE9KSHF CEE9HSHF CEE9USHF CEE9ILSH CEE9JLSH CEE9KLSH CEE9HLSH CEE9IRSH CEE9JRSH CEE9KRSH CEE9HRSH CEESICLR CEETICLR CEE9ICLR CEE9JCLR CEE9KCLR CEE9HCLR CEESISET CEETISET CEE9ISET CEE9JSET CEE9KSET CEE9HSET CEESITST CEETITST CEE9ITST CEE9JTST CEE9KTST CEE9HTST CEE9ITJT CEE9JTJT CEE9KTJT CEE9HTJT	0 < = X < = 31
2029	CEETILGB CEETDLBG	0
2030	CEETDREM	0
2031	CEETDLGM	NULL
2040	CEE9ISHC CEE9JSHC CEE9KSHC CEE9HSHC CEE9USHC	0 < x_3 < = *number_of_bits_in_*x_1 (where x_1 means the first input argument and x_3 means the third input argument)
2041	CEE9ISHC CEE9JSHC CEE9KSHC CEE9HSHC CEE9USHC	NULL
2042	CEE9IBIT CEE9JBIT CEE9KBIT CEE9HBIT	NULL
2043	CEE9IBIT CEE9JBIT CEE9KBIT CEE9HBIT	NULL

Language Environment Conversion Services

Language Environment provides 3 conversion services to perform the most complex and numerically sensitive part of converting numeric data between decimal character and floating-point representations: the mathematics of the conversion between decimal and float, while leaving other activities, likely to be specific to the calling environment, to be handled by the calling routine. The most important feature of this conversion is *accuracy*: correctly rounded conversions provide the only guarantee of recoverable values.

Terminology

The following terms are used with these definitions:

user data
Numeric data in the forms recognized as syntactically valid in programs and products that call the conversion routines.

The forms permitted for user data are varied, and not always syntactically consistent with one another across languages and other products. These conversion routines therefore provide only the most fundamental conversion capabilities, and rely on the caller to manage the details of creating and enforcing syntactic correctness in the calling environment.

input Conversion of decimal data in character form (external representation) to hexadecimal floating-point (internal representation).

output
Conversion of hexadecimal floating-point data (internal representation) to decimal data in character form (external representation).

digits In numeric data represented in character form, the decimal digits only (with no decimal point, no signs, no exponent) sometimes used to refer to hexadecimal or binary digits, which will be clear from the context.

value part
In numeric data represented in character form, the significant decimal digits and possibly, a decimal point.

exponent
An integer value indicating the power of ten by which the value part must be multiplied to obtain the actual value of a numeric datum.

ulp Unit in the Last Place

F-format
Character data in a form where only the *value part* is specified. Examples:

```
'12.345'    '12345'     '0'
'.12345'    '12345.'   '.0'
```

E-format
Character data in scientific notation, where a numeric *value part*, as defined above, is followed by an exponent indicator, usually the letter `'E'`, and a possibly signed integer that indicates a power of ten by which the numeric value should be multiplied.

```
'12.345E+00'  '12345E-3'     '0E0'     '1.0E+000000001'
'.12345E2'    '12345.E-03'  '.0E0'
```

In some languages the exponent indicator may be omitted, and an explicit exponent sign is used to indicate the presence of an exponent.

scale factor

Some languages, Fortran and PL/I, particularly, permit the user to specify in a FORMAT statement a power of ten by which the floating-point datum should be scaled during conversion.

These scale factors are explicitly provided to the conversion interface only for F-format output conversions. For the other conversions, they are handled by the caller.

CEEYCVHE — E-Format Output Conversion Routine

E-format (scientific notation) output is the simplest and most natural decimal format for hex floating-point data, since both express a numeric value in terms of its most significant digits. The output of this conversion is the number of most significant digits requested by the caller, with the last digit correctly rounded. The caller can then create the *user data* by adding signs, decimal points, and formatting the exponent as desired.

Extra precision may be requested. For example, the caller may request 15 output decimal digits from a 4-byte hex float input, even though a 1-ulp change in the input value could cause all decimal digits from the 6th through the 15th to change.

Syntax

void CEEYCVHE (*float_input, float_len, char_len, dec_chars, dec_exponent, [fc]*)

```
VFLOAT      *float_input;
INT4        *float_len;
INT4        *char_len;
CHARn       *dec_chars;
INT4        *dec_exponent;
FEED_BACK   *fc;
```

CEEYCVHE

Call this CWI interface as follows:

```
L      R12,A(CAA)                    address of CAA
L      R15,CEECAACELV-CEECAA(,R12)   address of libvec
L      R15,3504(,R15)                address of routine
BALR   R14,R15                       invoke the CEEYCVHE
```

float_input **(input)**

The floating-point value to be converted to decimal.

A negative zero will be treated as a positive zero. If negative zeros are significant in the calling environment, it is the caller's responsibility to distinguish between negative and positive zeros.

An input floating-point value may be unnormalized. If the presence of unnormalized data is significant in the calling environment, it is the caller's responsibility to detect and accommodate the fact of unnormalization.

Note: VS Fortran currently produces unnormalized E-format decimal output for unnormalized hex inputs. The intent is to let the user see the loss of significance directly. However, it has been decided that this is a language-dependent facility, and should be separately handled by languages that require it.

float_len **(input)**

The length of the floating-point input argument. The allowed values would be 4, 8, and 16.

char_len **(input)**
The number of decimal characters (digits) in the output character string. There may be from 1 to 35 digits.

If the value of the floating-point number *float_input* is zero, an implementation is not required to check the validity of this argument.

dec_chars **(output)**
A string of 1 to 35 decimal characters representing the pure decimal fraction of the converted result. These digits will contain the leading significant digits of the converted result:
1. The leading digit is nonzero if the input floating-point value is not zero.
2. The last output digit is correctly rounded.
3. The (implied) decimal point lies immediately to the left of the first digit of the output string.
4. The width of the output field may be from 1 to 35 characters.

dec_exponent **(output)**
A signed integer specifying the power of ten by which the decimal fraction must be multiplied to give the true value of the output number. This is the value that will normally be placed following an `'E'` in the final result.

The value of this exponent may be adjusted by the caller to accommodate any scale factor that may have been provided in the language's format conversion-control specification. (VS Fortran and PL/I output formatting permit the specification of a scaling factor that shifts the position of the decimal point. For example, the value `'.12345E+67'` can be displayed as `'123.45E+64'`.)

The actual placement of a decimal point, and subsequent adjustments to the external exponent and its conversion and formatting, are the responsibility of the caller.

fc **(output/optional)**
An 8-byte feedback code. The following conditions may result from this service:

CEE03G	Severity	3
	Msg_No	0112
	Message	For data conversion from internal floating-point form to character form, the value specified for the length of the output character string is outside the acceptable range. The valid range for E-format conversion is 1 to 35, and for F-format conversion is 2 to 36.
CEE2H8	Severity	0
	Msg_No	2600
	Message	Success with zero result. The conversion has been completed successfully, and the result is a true zero value.
CEE2H9	Severity	0
	Msg_No	2601
	Message	Success with positive result. The conversion has been completed successfully, and the result is strictly greater than zero.

CEE2HA	Severity	0
	Msg_No	2602
	Message	Success with a negative result. The conversion has been completed successfully, and the result is strictly less than zero.

Note: C run-time library (C RTL) can call this routine to perform the *ecvt* function with no extra formatting. The returned function value can be obtained from *dec_chars*. The returned *decpt* value can obtained from *dec_exponent* and *sign* can be obtained from feedback code.

E-Format Output Examples

For example, the following strings and exponents returned by CEEYCVHE could be converted by its caller to the following external user data representations:

```
Output   External   Examples of Possible Final User Data
Digits   Exponent   Representations (Formatted by Caller)


 '10'       +1       1.0      10.E-1    .1E+1     1
 '10'       +2      10.0      10.E+0    .1E+2    10
 '12'       -1       0.012    12.E-3   1.2E-2
 '501'       0       0.501   5.01E-1   501E-3
 '23'       +3     230.0      2.3E+2   .23E+3   230
```

Figure 76. Examples of E-format Output Conversions

The output string of decimal digits is treated as a pure fraction. The exponent and decimal point may be placed in any combination to represent the value in the desired *user data* representation.

CEEYCVHF — F-Format Output Conversion Routine

F-format output requires that data be converted to a fixed point format with a specified number of decimal places following the decimal point. As such, it is limited by two factors. First, producing a fixed number of decimal places may be in conflict with the property of floating-point data that it carry a fixed number of *significant* digits. Many values of such data can produce output with more digits than are actually significant. This is one reason for the second limitation: F-format output conversions tend to be applied to data with values in a known, and rather narrower, range than for data using E-format conversions.

F-format output produces fixed point output, with no decimal exponent. The floating-point value 10**10 would be formatted as a ’1’ digit followed by ten ’0’ digits:

```
'10000000000.'
```

and not as (for example) the E-format result

```
'1.0E10'
```

The size of the output string is dictated by three factors:

- The mandatory presence of a decimal point.
- The desired number (including zero) of decimal digits following the decimal point.
- The magnitude of the input floating-point value , which may require the placement of digits preceding the decimal point.

The output value is always right-justified in the output field, with leading blanks filling any unneeded positions. If the output string is too short to hold the output characters, an appropriate return or feedback code will indicate the field overflow.

Visualizing F-Format Conversions

There is a simple way to visualize what happens in converting floating-point data using F-type formatting box.

1. First, imagine that the number is written in infinite-precision fixed point decimal format.
2. If there is any scaling, move the decimal point right or left appropriately.
3. Put a horizontal window of single-character panes (the window's length is the same as the length of the output character string) over the resulting string of digits, making sure the decimal point is always visible. Round the rightmost visible digit, using the first discarded digit. Further adjustments may be needed to the position of the decimal point after rounding, if a carry out of the high-order position occurs. In this case, the window may have to be shifted, and it is possible the result will no longer fit.
4. Detect error conditions such as:
   a. No nonzero digits in the window.
   b. Overflow.
   c. No decimal point is visible.

Syntax

void CEEYCVHF (*float_input, float_len, scale, frac_digits, char_len, dec_chars, [fc]*)

```
VFLOAT      *float_input;
INT4        *float_len;
INT4        *scale;
INT4        *frac_digits;
INT4        *char_len;
CHARn       *dec_chars;
FEED_BACK   *fc;
```

CEEYCVHF

Call this CWI interface as follows:

```
L     R12,A(CAA)                   address of CAA
L     R15,CEECAACELV-CEECAA(,R12)  address of libvec
L     R15,3508(,R15)               address of routine
BALR  R14,R15                      invoke the CEEYCVHF
```

float_input **(input)**

The floating-point value to be converted to decimal.

A negative zero will be treated as a positive zero. If negative zeros are significant in the calling environment, it is the caller's responsibility to distinguish between negative and positive zeros.

An input floating-point value may be unnormalized. If the presence of unnormalized data is significant in the calling environment, it is the caller's responsibility to detect and accommodate the fact of unnormalization.

Note: VS Fortran currently produces unnormalized E-format decimal output for unnormalized hex inputs. The intent is to let the user see the loss of significance directly. However, it has been decided that this is a language-dependent facility, and should be separately handled by languages that require it.

float_len **(input)**
The length of the floating-point input argument. The allowed values are 4, 8, and 16.

scale **(input)**
A signed integer specifying the power of ten by which the decimal fraction must be multiplied to give the desired value of the output number. This value represents the number of places the decimal point should be shifted relative to the unscaled value.

frac_digits **(input)**
A nonnegative integer specifying the number of digits to be placed following the decimal point.

char_len **(input)**
The number of decimal characters (digits) in the output character string. There may be from 2 to 36 characters, containing a decimal point and 1 to 35 digits and/or blanks.

If the value of the floating-point number *float_input* is zero, an implementation is not required to check the validity of this argument.

dec_chars **(output)**
A string of 2 to 36 characters (a decimal point, one or more decimal digits, and possibly blanks) representing the converted result. A decimal point is always correctly placed in the *dec_chars* output string.

If the input floating-point value is identically zero, no characters are stored, and the return code will indicate the zero value. The caller is responsible for formatting the user data. This is done because zero fields are often blanked, or are formatted according to rules that may vary, depending on the language.

The nonblank output characters will be right-adjusted in the output string *dec_chars*. The last character position of the string will contain either the correctly rounded least significant decimal digit, or a decimal point, if no fraction digits are requested. Extra (unneeded) character positions at the left end of the string will be set to blanks.

It is possible for all output digits to be zero. If this condition arises, feedback/return codes will indicate that a nonzero input value has produced a correctly-rounded zero output. (Some languages do not permit attaching a minus sign to a zero. Thus, the conversion routines must be able to detect and manage this condition.)

At least one decimal digit is always produced, either immediately before the decimal point (if no fraction digits were requested) or immediately after the decimal point (if the rounded magnitude of the input floating-point number *float_input* is less than 1.0).

No leading zeros will appear to the left of the decimal point. Zero results will cause specific settings of the feedback/return code. A decimal digit will precede the decimal point only if the magnitude of the input floating-point number is at least 1.0.

The last (least significant) digit is always correctly rounded.

The width of the output field may be larger than needed, in the sense that more digits are requested than are truly significant. For example, if the input floating-point value were changed by one ULP, then one or more digits to the left of the lowest-order output digit would change. Alternatively, changing the

low-order decimal digit by 1, or more, and converting back to hex would not yield a different hex float number from the value originally supplied for output conversion to decimal.

In all cases, the conversion routine will supply no more than 35 significant digits.

If the magnitude of the input argument would cause the size of the output character string to exceed the allotted string length, the conversion will be abandoned and a feedback/return code setting will indicate conversion failure. The contents of *dec_chars* is unpredictable.

fc **(output/optional)**
An 8-byte feedback code. The following conditions may result from this service:

CEE03F	Severity	3
	Msg_No	0111
	Message	For data conversion from internal floating-point form to character form, the number of fraction digits specified was either negative or greater than the value specified for the length of the character string.
CEE03G	Severity	3
	Msg_No	0112
	Message	For data conversion from internal floating-point form to character form, the value specified for the length of the output character string is outside the acceptable range. The valid range for E-format conversion is 1 to 35, and for F-format conversion is 2 to 36.
CEE2H8	Severity	0
	Msg_No	2600
	Message	Success with zero result. The conversion has been completed successfully, and the result is a true zero value.
CEE2H9	Severity	0
	Msg_No	2601
	Message	Success with positive result. The conversion has been completed successfully, and the result is strictly greater than zero.
CEE2HA	Severity	0
	Msg_No	2602
	Message	Success with negative result. The conversion has been completed successfully, and the result is strictly less than zero.
CEE2HB	Severity	0
	Msg_No	2603
	Message	Success with plus-rounded-to-zero result The conversion has been completed successfully, and the result contains a zero result that was created by a strictly positive input value that rounded to zero.

CEE2HC	Severity	0
	Msg_No	2604
	Message	Success with minus-rounded-to-zero result. The conversion has been completed successfully, and the result contains a zero result that was created by a strictly negative input value that rounded to zero.
CEE2HE	Severity	2
	Msg_No	2606
	Message	Result overflows output field. The *float_input* argument is either too large, or the output string *dec_chars* is too small to contain the fixed-point representation of the input argument.

Note: C run-time library (C RTL) can call this routine to perform the basic conversion. It will then format the returned *fcvt* function value based on the returned values in *dec_chars*. The value *decpt* can be obtained by locating the position of the radix character in *dec_chars*. Also, the value of *sign* can be obtained from feedback code.

F-Format Output Examples

In Figure 77, the character `'b'` represents a blank. Assume in each case that the output character string *dec_chars* is 7 characters long.

```
 Input    Fraction   Character  Feedback
 Float    Digits     String     Code
 Value    Requested

 0.0          5       <none>     Success_with_zero_result
-0.0          5       <none>     Success_with_zero_result
 0.0077       0      'bbbbb0.'   Success_with_plus-rounded-to-zero_result
 0.0077       1      'bbbbb.0'   Success_with_plus-rounded-to-zero_result
-0.0077       0      'bbbbb0.'   Success_with_minus-rounded-to-zero_result
-0.0077       1      'bbbbb.0'   Success_with_minus-rounded-to-zero_result
 0.0077       2      'bbbb.01'   Success_with_positive_result
 0.0077       3      'bbb.008'   Success_with_positive_result
 0.0077       4      'bb.0077'   Success_with_positive_result
 0.0077       5      'b.00770'   Success_with_positive_result
 0.0077       6      '.007700'   Success_with_positive_result
 0.5000       0      'bbbbb1.'   Success_with_positive_result
 0.5000       1      'bbbbb.5'   Success_with_positive_result
 3.4567       0      'bbbbb3.'   Success_with_positive_result
 3.4567       1      'bbbb3.5'   Success_with_positive_result
 3.4567       2      'bbb3.46'   Success_with_positive_result
 3.4567       3      'bb3.457'   Success_with_positive_result
 3.4567       4      'b3.4567'   Success_with_positive_result
 3.4567       5      '3.45670'   Success_with_positive_result
 3.4567       6      undefined   Result_overflows_output_field
-0.9876       0      'bbbbb1.'   Success_with_negative_result
-0.9876       1      'bbbb1.0'   Success_with_negative_result
-0.9876       2      'bbbb.99'   Success_with_negative_result
-0.9876       6      '.987600'   Success_with_negative_result
34.5678       0      'bb1235.'   Success_with_positive_result
34.5678       1      'b1234.6'   Success_with_positive_result
34.5678       2      '1234.57'   Success_with_positive_result
34.5678       3      undefined   Result_overflows_output_field
```

Figure 77. Examples of F-format Output Conversions

CEEYCVHI — Decimal to Float Input Conversion Routine

The input conversion routines take a string of decimal characters representing a pure fraction, and a binary integer representing a decimal exponent, and converts them to the best approximating floating-point value.

It is important to remember that the input datum is considered to be infinitely precise. That is, the conversion routine assumes an infinite number of trailing zeros following the last input digit. Actual real-world data does not behave this way. Such data is usually contaminated by estimation errors in at least the last digit. The ability of an application to capture information that could provide error estimates or error intervals requires techniques beyond the capabilities of these conversion interfaces. (The ACRITH package was designed specifically to provide this kind of information.)

The requirement that the decimal digits be treated as pure fractions may require that numeric user data in each product's favorite or traditional representations be pre-scanned by the caller (for syntactic validation, among other things) to remove embedded decimal points, sign characters, and to determine the value of any explicitly-specified decimal exponent.

For example, suppose the caller wishes to convert input user data from one of these character strings:

```
        '  12.345   '
  or    '.12345E+2  '
  or    '12345.E-003'
```

Then, in all of these cases, the character data and exponent passed to the conversion routine would be:

```
    exponent     =      +2
    digit string =  '12345'
```

Similarly, if an input user datum had the form `'1.2345E+67'`, then the character data and exponent passed to the conversion routine would be:

```
    exponent     =     +68
    digit string =  '12345'
```

Further examples are given in "Input Examples" on page 369, and in Figure 78 on page 367 below.

Note: In Figure 78 on page 367, floating-point values are shown as their equivalent decimal approximations. To illustrate, the following digit strings and exponents would be converted to the internal floating-point values as indicated:

```
Decimal          Decimal        Resulting Output
Digit String     Exponent       Floating-point Value

   '1'             +5            10000.0
   '10'            -1                0.01
   '10'            -2                0.001
   '501'           -3                 .000501
   '23'            +1                2.3
   '23'            +3              230.0
```

Figure 78. Examples of Input Conversions

The string of decimal digits is treated as a pure fraction. The decimal exponent is derived externally (by the caller) from a combination of known decimal point placement, any explicit exponent of a form like `'Enn'`, and the scale factor.

Syntax

void CEEYCVHI (*dec_chars, char_len, dec_exponent, float_len, float_result, [fc]*)

```
CHARn       *dec_chars;
INT4        *char_len;
INT4        *dec_exponent;
INT4        *float_len;
VFLOAT      *float_result;
FEED_BACK   *fc;
```

CEEYCVHI

Call this CWI interface as follows:

```
L      R12,A(CAA)                    address of CAA
L      R15,CEECAACELV-CEECAA(,R12)   address of libvec
L      R15,3512(,R15)                address of routine
BALR   R14,R15                       invoke the CEEYCVHI
```

dec_chars **(input)**

A string of 1 to 35 decimal characters representing the pure decimal fraction to be converted. There may be no signs, decimal points, commas, exponents, etc. in the string. The leading digit may be zero. The input service will automatically handle unnormalized data, for example: `'0025'`. However, the total number of input digits processed is still limited to 35.

The string of digits is treated by the conversion routine as though there is an implied decimal point at the left end of the string.

char_len **(input)**

The number of decimal characters (digits) in the input character string. There may be from 1 to 35 digits.

The actual length of the input character string may be greater than the number of decimal digits, but only the number of digits specified will be used in the conversion.

The conversion routine will ignore excess decimal digits whose values cannot affect the value of the converted result. (35 decimal digits provide sufficient precision to separate all representable 16-byte hex float values.) Invalid data in those ignored digit positions may or may not cause unpredictable results or other error or exception conditions.

dec_exponent **(input)**

A signed integer specifying the power of ten by which the decimal fraction must

be multiplied to give the true value of the input number to be converted to floating-point. This value is determined by the caller, from a combination of

1. The position of any decimal point (if it was present) within the original input user data,
2. Any exponent value specified in the original user data.
3. Any scale factor specified in the HLL's format conversion-control specification.

float_len **(input)**
The length of the floating-point result. For System/370 hexadecimal floating-point, the allowed values are 4, 8, and 16; for IEEE floating-point, the allowed values are 4 and 8.

float_result **(output)**
The converted floating-point result. (A result may or may not be stored here; see the discussion of feedback/return codes below.)

fc **(output/optional)**
An 8-byte feedback code. The following conditions may result from this service:

CEE03E	Severity	3
	Msg_No	0110
	Message	For data conversion from character form to internal floating-point form, an invalid character was specified in the input character string *character_string*.
CEE03H	Severity	3
	Msg_No	0113
	Message	For data conversion from character form to internal floating-point form, the value specified for the length of the input character string is outside the acceptable range. The valid range is 1 to 35.
CEE2H8	Severity	0
	Msg_No	2600
	Message	Success with zero result. The conversion has been completed successfully, and the result is a true zero value.
CEE2H9	Severity	0
	Msg_No	2601
	Message	Success with positive result. The conversion has been completed successfully, and the result is strictly greater than zero.
CEE2HF	Severity	2
	Msg_No	2607
	Message	Result has underflowed. The conversion would have resulted in a number smaller than the underflow threshold for the floating-point representation. A true floating-point zero result has been returned in *float_result*.

CEE2HG	Severity	2
	Msg_No	2608
	Message	Result has overflowed. The conversion would have resulted in a number larger than the overflow threshold for the floating-point representation. The maximum possible floating-point magnitude has been returned in *float_result*.

Input Examples

Figure 79 shows examples of input conversions, including zero and out-of range values The example assumes that a System/370 4-byte hexadecimal *float_result* was requested.

```
Decimal   Decimal     4-byte Hex
Digits    Exponent    Float_Result     Feedback Code

  '100'      +4       X'433E8000'     Success_with_positive_result
  '100'      +3       X'42640000'     Success_with_positive_result
  '100'      +2       X'41A00000'     Success_with_positive_result
  '100'      +1       X'41100000'     Success_with_positive_result
  '100'       0       X'4019999A'     Success_with_positive_result
  '100'      -1       X'3F28F5C3'     Success_with_positive_result

  '000'      +4       X'00000000'     Success_with_zero_result

'12345'    -123       X'00000000'     Result_has_underflowed
'12345'    +123       X'7FFFFFFF'     Result_has_overflowed
```

Figure 79. Examples of Input Conversions with Feedback Indicated

Chapter 12. Dump and Tracing Services

This section covers the dump services available in Language Environment and includes information on the Language Environment tracing facilities.

Dump Services

Language Environment provides the following dump services:

- CEE3DMP
- CEESDMP
- CEETRCB
- CEETBCK
- CEELDMP
- CEEVDMP
- CEEHDMP
- CEEBDMP

The dumps generated by these services are designed to be easier to read than a system dump, which can often minimize the need to examine a system dump. The first service, CEE3DMP, is a callable service. The remaining are CWIs and are not intended to be called by the application writer.

CEE3DMP

CEE3DMP is a callable service. It dumps the run-time environment of Language Environment and the member language libraries in an easily understandable form. CEE3DMP is the only dump service that can be called directly by an application program. It produces a dump report that is formatted into pages for printing.

When providing a multithread dump, Language Environment must quiesce all other threads within the application. When the dump option THREAD(CURRENT) is specified, only the current thread is dumped. When the dump option THREAD(ALL) is specified, the current thread is dumped first and then, starting with the IPT, all remaining threads are dumped one at a time. For more information see *z/OS Language Environment Programming Reference*.

CEESDMP

CEESDMP is a CWI. It symbolically dumps the variables of one routine. The format is similar to the symbolic dump of variables in the CEE3DMP report.

CEETRCB

CEETRCB is a CWI. This low-level service assists in tracing the call chain backwards. It identifies the language, program unit, entry point, current location, caller's DSA, and other information from the address of a DSA or save area for a program unit.

CEETBCK

CEETBCK is a CWI which will replace CEETRCB. It assists in tracing the call chain backwards. It identifies the language, program unit, entry point, current location, caller's DSA, and other information from the address of a DSA or save area for a program unit.

To perform language-specific processing for CEE3DMP, CEESDMP, and CEETRCB, each HLL must provide utility and dump exit routines in their libraries. These exit routines are called with the member event handler using event codes 6 and 7. For a description of the calling method, see "Language Environment Member List and Event Handler" on page 74.

© Copyright IBM Corp. 1991, 2002

Dump and Tracing Services

The following CWI dump services can only be used in dump exits. They format information that is placed in the dump report or written to the message file:

- CEELDMP writes a single line message into the dump report.
- CEEVDMP formats the name, type, value, and other information about a variable and writes it to the dump report.
- CEEHDMP dumps a section of storage in hexadecimal and character.
- CEEBDMP dumps a control block.

Figure 80 shows possible transfers of control among an application program, a member language library, and Language Environment for dump processing.

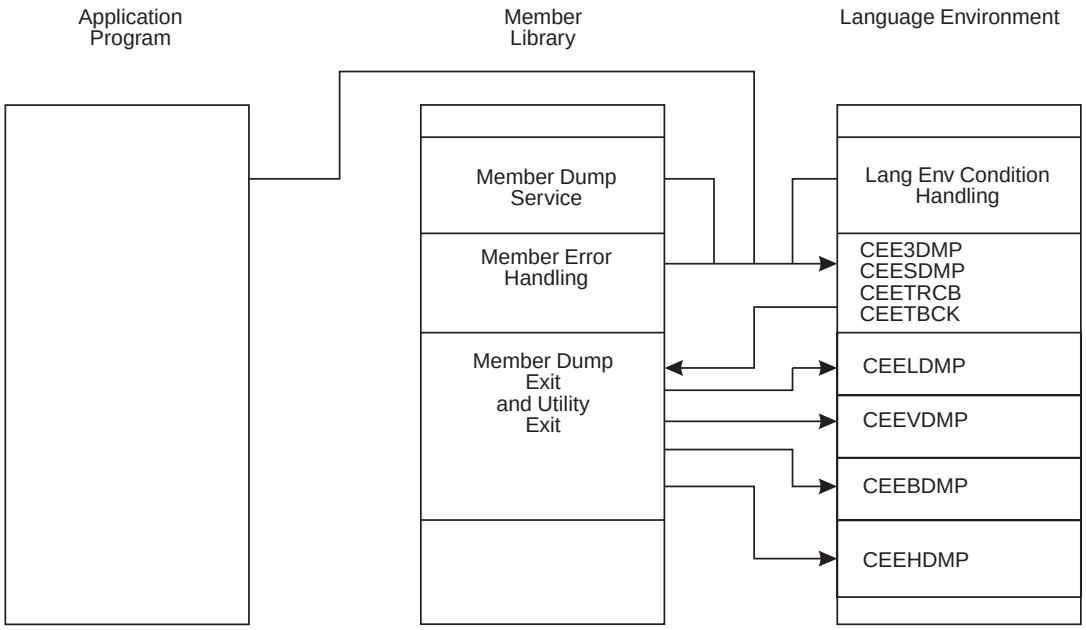

Figure 80. Transferring Control Between Application Program, Member Language Library, and Language Environment

CEE3DMP, CEESDMP, CEETBCK or CEETRCB can be called:

- By a member language library as part of member language dump services
- By a member language library as part of language-specific error handling
- By Language Environment exception handling

In addition, CEE3DMP can be called directly by the application program. These dump utilities then call member language library dump exits and utility exits, which in turn call CEELDMP, CEEVDMP, CEEBDMP, and CEEHDMP.

Output from CEE3DMP is written to a file whose DDNAME is specified on the call to CEE3DMP using Language Environment message services. All output from CEESDMP is written to the message file.

The remainder of this section describes the dump services, and their linkage to a dump exit routine. Linkage to the utility exit is described in “Event Code 6 — Event Handler Utilities Event” on page 451.

CEE3DMP — Run-Time Environment Dump Service

This callable service generates a dump of the run-time environment. Sections of the dump are selectively included, depending on options specified with the *options* parameter. For more information see *z/OS Language Environment Programming Reference*.

CEESDMP — Symbolic Dump of a Routine

This low-level service symbolically dumps all variables in a program unit to the message file. The format of this dump is similar to the symbolic dump of variables in the CEE3DMP report when the VARIABLES option is specified.

Syntax

void CEESDMP (*dsaptr*, *fc*)

```
INT4      *dsaptr;
FEED_BACK *fc;
```

CEESDMP

Call this CWI interface as follows:

```
L     R15,CEECAACELV-CEECAA(,R12)   Address of CAA in R12
L     R15,2892(,R15)
BALR  R14,R15
```

dsaptr **(input)**

A fullword containing the DSA address of the routine whose variables are being dumped.

fc **(output)**

A 12-byte feedback code passed by reference. The following symbolic conditions can result from this service:

CEE000	Severity	0
	Msg_No	N/A
	Message	The service completed successfully.
CEE30V	Severity	3
	Msg_No	3103
	Message	An error occurred in writing messages to the dump file. This could be caused by a bad file name specified with the FNAME option.

Note: Member language dump exits are called to interpret the values of their symbol tables and dump variables with calls to CEEVDMP. This is done primarily with function codes 4 and 5. This is identical to the processing of CEE3DMP with function codes 2 and 3 except that CEEVDMP formats the data for the terminal and sends it to the message file.

CEETRCB — Traceback Utility

Note

CEETRCB has been deprecated but remains for compatibility. CEETRCB does not provide information about the format of the DSA. It should be considered obsolete and calls to it should eventually be replaced with calls to the new CWI CEETBCK.

This low-level service assists in tracing the call chain backwards. It identifies the language, program unit, entry point, current location, caller's DSA, and other information from the address of a DSA or save area for a program unit. This is essential for creating meaningful traceback messages.

Syntax

void CEETRCB (*dsaptr, caaptr, member_id, program_unit_name, program_unit_name_length, program_unit_address, entry_name, entry_name_length, entry_address,call_instruction_address, statement_id, statement_id_length, cibptr, main_program, callers_dsaptr, fc*)

```
POINTER   *dsaptr;
POINTER   *caaptr;
INT4      *member_id;
CHARn     *program_unit_name;
INT4      *program_unit_name_length;
INT4      *program_unit_address;
CHARn     *entry_name;
INT4      *entry_name_length;
INT4      *entry_address;
INT4      *call_instruction_address;
CHARn     *statement_id;
INT4      *statement_id_length;
POINTER   *cibptr;
INT4      *main_program;
POINTER   *callers_dsaptr;
FEED_BACK *fc;
```

CEETRCB

Call this CWI interface as follows:

```
L     R15,CEECAACELV-CEECAA(,R12)   Address of CAA in R12
L     R15,0072(,R15)
BALR  R14,R15
```

dsaptr **(input)**

A fullword pointer containing the address of the DSA for the current routine in the traceback. This can also be the address of a standard 18 fullword save area if Language Environment conventions were not used for the routine.

caaptr **(input)**

A fullword pointer containing the address of the CAA associated with the DSA or save area pointed to by *dsaptr*.

member_id **(output)**

A fullword binary integer to contain the member identifier for the routine associated with the DSA. If the member ID cannot be determined, this parameter is set to negative one.

program_unit_name **(output)**

A fixed-length character string of arbitrary length to contain the name of the

program unit containing the routine associated with the DSA. If the program unit name cannot be determined, this parameter is set to all blanks. If the program unit name cannot fit within the supplied string, it is truncated. (Truncation of DBCS preserves even byte count and SI/SO pairing.)

program_unit_name_length **(input/output)**
A fullword binary integer containing the length of the program unit name string on entry and the actual length of the program unit name placed in the string on exit. If the program unit name cannot be determined, this parameter is set to zero. The maximum length a string can be is 256 bytes. Lengths less than zero are treated as zero. Lengths greater than 256 are treated as 256.

program_unit_address **(output)**
A fullword binary integer containing the address of the start of the program unit for the routine associated with the DSA. If the program unit address cannot be determined, this parameter is set to zero.

entry_name **(output)**
A fixed-length character string of arbitrary length to contain the name of the entry point into the routine associated with the DSA. If the entry point name cannot be determined, this parameter is set to all blanks. If the entry point name cannot fit within the supplied string, it is truncated. (Truncation of DBCS preserves even byte count and SI/SO pairing.)

entry_name_length **(input/output)**
A fullword binary integer containing the length of the entry point name string on entry and the actual length of the entry point name placed in the string on exit. If the entry point name cannot be determined, this parameter is set to zero. The maximum length a string can be is 256 bytes. Lengths less than zero are treated as zero. Lengths greater than 256 are treated as 256.

entry_address **(output)**
A fullword binary integer that contains the address of the entry point into the routine associated with the DSA. If the entry point address cannot be determined, this parameter is set to zero.

call_instruction_address **(output)**
A fullword binary integer that contains the address of the instruction that caused transfer out of the routine. This is either the address of a BALR or BASSM instruction if transfer was made by subroutine call, or the address of the interrupted statement if transfer was caused by an exception. If the address cannot be determined, this parameter is set to zero.

statement_id **(output)**
A fixed-length character string of arbitrary length that contains the identifier of the statement containing the instruction which caused transfer out of the routine. If the statement cannot be determined, this parameter is set to all blanks. If the statement ID cannot fit within the supplied string, it is truncated. (Truncation of DBCS preserves even byte count and SI/SO pairing.)

statement_id_length **(input/output)**
A fullword binary integer containing the length of the statement ID string on entry and the actual length of the statement ID placed in the string on exit. If the statement ID cannot be determined, this parameter is set to zero. The maximum length a string can be is 256 bytes. Lengths less than zero are treated as zero. Lengths greater than 256 are treated as 256.

cibptr **(output)**
A fullword pointer containing the address of the CEECIB associated with the DSA if an exception occurred. If no exception occurred, this parameter is set to

zero. Note that if an exception caused transfer out of the routine, the state of the registers after the last instruction ran in the routine is saved in the CIB, rather than in the DSA.

main_program **(output)**
A fullword binary integer set to one of the following:
0 The routine associated with the DSA is not the main program.
1 The routine associated with the DSA is the main program.

callers_dsaptr **(output)**
A fullword pointer containing the address of the DSA or save area of the caller. If the address of the caller's DSA cannot be determined or is not valid (points to inaccessible storage), then this parameter is set to zero.

fc **(output)**
A 12-byte feedback code passed by reference. The following symbolic conditions can result from this service:

CEE000	Severity	0
	Msg_No	N/A
	Message	The service completed successfully.
CEE310	Severity	3
	Msg_No	3104
	Message	Information could not be successfully extracted for this DSA. It is likely that the *dsaptr* parameter does not point to an actual DSA or save area.

Note: CEETRCB uses member event handler utility exits, described in "Event Code 6 — Event Handler Utilities Event" on page 451.

CEETBCK — Traceback Utility (replaces CEETRCB)

This CWI will assist in tracing the call chain backwards. It identifies the language, program unit, entry point, current location, caller's DSA, and other information from the address of a DSA or save area for a program unit. This is essential for creating meaningful traceback messages.

The CWI will handle both upward- and downward-growing stacks.

Note: There are several reasons for executing CEETBCK instead of just updating CEETRCB:

- For XPLINK, a routine's registers on entry are saved in the routine's own stack frame instead of its caller's stack frame.
- For XPLINK, the return address stored in a DSA is the caller's return address and not the return address to the stack frame owner.
- Additional parameters which indicate the stack frame format for both the input and the output (caller's) DSA are maintained.
- The function of the call_instruction_address parameters has changed and a new parameter callers_call_instruction has been added.

Syntax

void CEETBCK *(dsaptr, dsa_format, caaptr, member_id, program_unit_name, program_unit_name_length, program_unit_address, call_instruction_address, entry_name, entry_name_length, entry_address, callers_call_instruction_address, callers_dsaptr, callers_dsa_format, statement_id, statement_id_length, cibptr, main_program, fc)*

```
POINTER   *dsaptr;
INT4      *dsa_format;
POINTER   *caaptr;
INT4      *member_id;
CHARn     *program_unit_name;
INT4      *program_unit_name_length;
INT4      *program_unit_address;
INT4      *call_instruction_address;
CHARn     *entry_name;
INT4      *entry_name_length;
INT4      *entry_address;
INT4      *callers_call_instruction_address;
POINTER   *callers_dsaptr;
INT4      *callers_dsa_format;
INT4      *call_instruction_address;
CHARn     *statement_id;
INT4      *statement_id_length;
POINTER   *cibptr;
INT4      *main_program;
FEED_BACK *fc;
```

CEETBCK

Call this CWI interface as follows:

```
L     R15,CEECAALEOV-CEECAA(,R12)   Address of CAA in R12
L     R15,304(,R15)
BALR  R14,R15
```

dsaptr **(input)**

A fullword pointer containing the address of the DSA for the current routine in the traceback. This can also be the address of a standard 18 fullword save area if Language Environment conventions were not used for the routine.

DSA_format **(input/output)**

A fullword binary integer set to one of the following:

0 The format of the DSA is a Standard OS Linkage register save area (with or without Language Environment fields, including the next available byte).

1 The format of the DSA is XPLINK style.

-1 The format of the DSA is unknown. When multiple calls are made to CEETBCK to scan the call chain, the *callers_dsa_format* (described below) returned from the previous call can be used here.

caaptr **(input)**

A fullword pointer containing the address of the CAA associated with the DSA or save area pointed to by *dsaptr*.

member_id **(output)**

A fullword binary integer containing the member identifier for the routine associated with the DSA. If the member ID cannot be determined, this parameter is set to negative one.

program_unit_name **(output)**

A fixed-length character string of arbitrary length containing the name of the

program unit containing the routine associated with the DSA. If the program unit name cannot be determined, this parameter is set to all blanks. If the program unit name cannot fit within the supplied string, it is truncated. (Truncation of DBCS preserves even byte count and SI/SO pairing.)

program_unit_name_length **(input/output)**
A fullword binary integer containing the length of the program unit name string on entry, and the actual length of the program unit name placed in the string on exit. If the program unit name cannot be determined, this parameter is set to zero. The maximum length a string can be is 256 bytes. Lengths less than zero are treated as zero. Lengths greater than 256 are treated as 256.

program_unit_address **(output)**
A fullword binary integer containing the address of the start of the program unit for the routine associated with the DSA. If the program unit address cannot be determined, this parameter is set to zero.

call_instruction_address **(input/output)**
A fullword binary integer that contains the address of the instruction that caused transfer out of the routine. This is either the address of a BASR, BALR or BASSM instruction if transfer was made by subroutine call, or the address of the interrupted statement if transfer was caused by an exception. When multiple calls are made to CEETBCK to scan the call chain, the *callers_call_instruction* (described below) returned from the previous call can be used here. If the address is not known, this parameter should be set to zero. When this parameter is zero on input and the address can be determined, it will be returned.

entry_name **(output)**
A fixed-length character string of arbitrary length to contain the name of the entry point into the routine associated with the DSA. If the entry point name cannot be determined, this parameter is set to all blanks. If the entry point name cannot fit within the supplied string, it is truncated. (Truncation of DBCS preserves even byte count and SI/SO pairing.)

entry_name_length **(input/output)**
A fullword binary integer containing the length of the entry point name string on entry, and the actual length of the entry point name placed in the string on exit. If the entry point name cannot be determined, this parameter is set to zero. The maximum length a string can be is 256 bytes. Lengths less than zero are treated as zero. Lengths greater than 256 are treated as 256.

entry_address **(output)**
A fullword binary integer that contains the address of the entry point into the routine associated with the DSA. If the entry point address cannot be determined, this parameter is set to zero.

callers_call_instruction_address **(output)**
A fullword binary integer that contains the address of the instruction that caused transfer out of the caller. This is either the address of a BASR, BALR or BASSM instruction if transfer was made by subroutine call, or the address of the interrupted statement if transfer was caused by an exception. If the address cannot be determined, this parameter is set to zero.

callers_dsaptr **(output)**
A fullword pointer containing the address of the DSA or save area of the caller. If the address of the caller's DSA cannot be determined or is not valid (points to inaccessible storage), then this parameter is set to zero.

callers_DSA_format **(output)**
A fullword binary integer set to one of the following:
0 The format of the DSA is a Standard OS Linkage register save area (with or without Language Environment fields, including the next available byte.)
1 The format of the DSA is XPLINK style.

statement_id **(output)**
A fixed-length character string of arbitrary length that contains the identifier of the statement containing the instruction which caused transfer out of the routine. If the statement cannot be determined, this parameter is set to all blanks. If the statement ID cannot fit within the supplied string, it is truncated. (Truncation of DBCS preserves even byte count and SI/SO pairing.)

statement_id_length **(input/output)**
A fullword binary integer containing the length of the statement ID string on entry, and the actual length of the statement ID placed in the string on exit. If the statement ID cannot be determined, this parameter is set to zero. The maximum length a string can be is 256 bytes. Lengths less than zero are treated as zero. Lengths greater than 256 are treated as 256.

cibptr **(output)**
A fullword pointer containing the address of the CEECIB associated with the DSA if an exception occurred. If no exception occurred, this parameter is set to zero. Note that if an exception caused transfer out of the routine, the state of the registers after the last instruction ran in the routine is saved in the CIB, rather than in the DSA.

main_program **(output)**
A fullword binary integer set to one of the following:
0 The routine associated with the DSA is not the main program.
1 The routine associated with the DSA is the main program.

fc **(output)**
A 12-byte feedback code passed by reference. The following symbolic conditions can result from this service:

CEE000	Severity	0
	Msg_No	N/A
	Message	The service completed successfully.
CEE310	Severity	3
	Msg_No	3104
	Message	Information could not be successfully extracted for this DSA. It is likely that the *dsaptr* parameter does not point to an actual DSA or save area.

Note: CEETBCK uses member event handler utility exits (Event Code 6).

Member Language Dump Exit

While dump services are running, all member-specific processing is performed through an exit to the member event handler with an event code of 7. For more information about establishing member event handlers, see “Language Environment Member List and Event Handler” on page 74. Each member language is required to supply a dump exit routine.

CEELDMP — Single Line Message Dump Service

The following low-level service allows member language dump exits to place a single-line message into the dump. These are usually informational messages, such as the attributes of a file.

Syntax

void CEELDMP (*message, message_length, fc*)

```
CHARn     *message;
INT4      *message_length;
FEED_BACK *fc;
```

CEELDMP

Call this CWI interface as follows:

```
L     R15,CEECAACELV-CEECAA(,R12)   Address of CAA in R12
L     R15,0036(,R15)
BALR  R14,R15
```

message **(input)**

A fixed-length character string of arbitrary length containing the message to be placed in the dump. It does not include printer control characters. Control characters and leading blanks are added by Language Environment dump services.

message_length **(input)**

A fullword binary integer containing the length of the message string. The string can be up to 120 bytes long. The string length is treated as zero if it is less than zero. String lengths greater than 120 are truncated to 120 bytes.

fc **(output)**

A 2-byte feedback code passed by reference. The following symbolic conditions can result from this service; if more than one error condition occurs, the feedback code reflects the last diagnosed condition:

CEE000	Severity	0
	Msg_No	N/A
	Message	The service completed successfully.
CEE30T	Severity	2
	Msg_No	3101
	Message	The message was longer than 120 bytes. It has been truncated to 120.
CEE30V	Severity	3
	Msg_No	3103
	Message	An error occurred in writing messages to the dump file.

Note: Member language library dump exits should always use CEELDMP to write messages into the dump. They should never write directly to CEE3DMP through Language Environment message services. Otherwise, Language Environment dump services cannot keep track of the number of lines in the dump to break pages correctly.

CEEVDMP — Variable Dump Service

CEEVDMP is a low-level service that assists in formatting and dumping variables for member languages. This service promotes consistency in the display of variables among member languages.

Syntax

void CEEVDMP (*statement_id, statement_id_length, indent, level, name, name_length, type, type_length, value, value_length, value_division, array_continued, fc*)

```
CHARn     *statement_id;
INT4      *statement_id_length;
INT4      *indent;
INT4      *level;
CHARn     *name;
INT4      *name_length;
CHARn     *type;
INT4      *type_length;
CHARn     *value;
INT4      *value_length;
INT4      *value_division;
INT4      *array_continued;
FEED_BACK *fc;
```

CEEVDMP

Call this CWI interface as follows:

```
L     R15,CEECAACELV-CEECAA(,R12)   Address of CAA in R12
L     R15,0048(,R15)
BALR  R14,R15
```

statement_id **(input)**

A fixed-length character string containing an identifier of the statement from which the dumped variable is declared. This is usually a statement number.

statement_id_length **(input)**

A fullword binary integer containing the length of the statement identifier. The length is zero if there is no statement identifier for the variable. The maximum length is 8 bytes. Values less than zero are treated as zero. Values greater than 8 bytes are truncated to 8.

indent **(input)**

A fullword binary integer containing the number of additional blanks to insert after the statement identifier and before the level of the variable. This feature indents fields of a structure or elements of an array. The maximum indent allowed is 10 blanks. Indent values less than zero are regarded as zero. Values greater than 10 blanks are truncated to 10.

level **(input)**

A fullword binary integer containing the level of the variable if the variable is a field in a record or structure. It can be in the range of 1 to 255. If the language does not use level numbers or the variable does not have a level number, the level value is zero. Level values less than zero are regarded as zero. Values greater than 255 are truncated to 255.

name **(input)**

A fixed-length character string containing the name of the variable. The subscript is part of character string if the variable is an array element.

name_length **(input)**

A fullword binary integer containing the length of the name. If the *name_length*

is greater than 16 characters, the succeeding fields of the message are placed on the next line in the dump. A *name_length* less than zero is regarded as zero. The maximum *name_length* is 60 characters. Lengths greater than 60 characters are truncated to 60.

type **(input)**
A fixed-length character string containing the variable data type. Other variable attributes can be placed in this string if they are known. The type character string should contain only blanks if the data type is not known. Trailing blanks are ignored. If the length of the string is more than 16 characters, the type and value fields of the message are placed on the next line in the dump.

type_length **(input)**
A fullword binary integer containing the length of the data type string. The value field of the message is placed on the next line in the dump if the *type_length* is greater than 16 characters. The maximum *type_length* is 60 characters. A *type_length* that is less than zero is regarded as zero. Values greater than 60 characters are truncated to 60.

value **(input)**
A fixed-length character string containing the value of the variable.

For arrays, it is recommended that the value field show more than one element of the array to minimize the number of lines in the dump. Examples of array output are shown in topic 2 on page 383.

value_length **(input)**
A fullword binary integer containing the length of the value string. If the length of the string is more than 60 characters, it is divided and printed on one or more following lines in the dump as needed. The actual point of division is indicated by the *value_division* parameter. A *value_length* that is less than zero is regarded as zero.

value_division **(input)**
A fullword binary integer indicating how a value string should be divided when it is more than 60 characters. It can contain one of the following values; values that are not valid are treated as 1:

1 Divide the string every 60 characters, without regard to the contents of the string.

2 Divide the string at blanks, if possible.

array_continued **(input)**
A fullword binary integer indicating additional calls to CEEVDMP to dump other elements of the same array. This allows CEEVDMP to compress multiple lines of the same array with the same values. This saves space if the array contains many elements with the same value. This parameter should be one of the following; values that are not valid are treated as 0:

0 This is not a dump of an array or this is the last call to CEEVDMP to dump an array.

1 This is the dump of an array and additional calls to CEEVDMP are made to dump additional elements of this array.

fc **(output)**
A 12-byte feedback code passed by reference. The following symbolic conditions can result from this service; if more than one error condition occurs, the feedback code reflects the last diagnosed condition:

CEE000	Severity	0
	Msg_No	N/A
	Message	The service completed successfully.
CEE30V	Severity	3
	Msg_No	3103
	Message	An error occurred in writing messages to the dump file.
CEE312	Severity	3
	Msg_No	3106
	Message	An invalid parameter value was specified.

The dump output has the format shown in Figure 81.

```
 1     2  3          4                  5                                  6
 ↓     ↓  ↓          ↓                  ↓                                  ↓
12345678    123  ABCDEFGHIJKLMNOP  ABCDEFGHIJKLMNOP  1234567890123456789012345678901234567890123456789012345678901234567890
```

Figure 81. CEEVDMP Output Format

1 The statement identifier. This field is removed if the identifier is all blanks or zero.

2 The indent, shown at its maximum of 10 blanks. There is always one more space between the statement identifier and the level than the indent number. So, for this example, there are 11 spaces.

3 The level number; if the level number is 0, this field is removed.

4 The name of the variable, array, or field.

5 The type information.

6 A character representation of the value of the data. It is the responsibility of the user of CEEVDMP to translate the data to character and to precede the value with the appropriate number of spaces if right justification is desired. Any characters with byte values between X'00' and X'3F' are displayed as periods, except for DBCS shift-out and shift-in codes. When the value wrapping to a new line causes DBCS data to be divided, even byte count and SI/SO pairing is preserved.

Usage Notes:

1. When elements in the dump of an array are removed because the elements have the same value, the following message is inserted (`a` and `b` are the names of the first and last element suppressed):

   ```
   a to b elements same as above.
   ```

2. The following is an example of a variable and a record in COBOL:

   ```
   00000024 77 BAD-FLAG       X           N
   00000029 01 PRINT-DATE     AN-GR
   00000030   02 FILLER         X(16)       TODAY'S DATE IS
   00000032   02 PRINT-MONTH    X(9)        APRIL
   00000033   02 FILLER         XX          *** Invalid data for this data type ***
                                            Hex 0000
   00000034   02 PRINT-DAY      99          *** Invalid data for this data type ***
   ```

```
                                                Hex 0000
00000035   02 FILLER         XXX          ,19
00000036   02 PRINT-YEAR     99           88
```

CEEHDMP — Hexadecimal Storage Dump Service

This low-level service dumps a section of storage in both hex and character representations. It contains protection against addresses that are not valid.

Syntax

void CEEHDMP (*title, title_length, address, length, fc*)

```
CHARn     *title;
INT4      *title_length;
INT4      *address;
INT4      *length;
FEED_BACK *fc;
```

CEEHDMP

Call this CWI interface as follows:

```
L     R15,CEECAACELV-CEECAA(,R12)   Address of CAA in R12
L     R15,0044(,R15)
BALR  R14,R15
```

title **(input)**
A fixed-length character string that identifies the displayed storage section.

title_length **(input)**
A fullword binary integer containing the length of the title. The maximum length is 60 characters.

address **(input)**
A 31-bit address of the first byte of storage to be dumped.

length **(input)**
A fullword binary integer containing the length of the storage area.

fc **(output)**
A 12-byte feedback code passed by reference. The following symbolic conditions can result from this service; if more than one error condition occurs, the feedback code reflects the last diagnosed condition:

CEE000	Severity	0
	Msg_No	N/A
	Message	The service completed successfully.
CEE30T	Severity	2
	Msg_No	3101
	Message	The title string was longer than 60 characters and was truncated.
CEE30V	Severity	3
	Msg_No	3103
	Message	An error occurred in writing messages to the dump file.

CEE313	Severity	3
	Msg_No	3107
	Message	Dump terminated before all storage could be dumped because inaccessible storage was encountered.

Lines in the dump contain the format shown in Figure 82.

```
 1          2
 ↓          ↓
TITLE:    00123456
  +000000  00123456  12345678 12345678 12345678 12345678  12345678 12345678 12345678 12345678 |abcdefghijklmopqrstuvwxyzabcdef|
                    ↑        ↑                          |                                    ↑
                    3        4                          5                                    6
```

Figure 82. CEEHDMP Output Format

1 The string given on the *title* argument. The string is truncated if it is too long to fit on a single dump line.
2 The starting address of this section of storage.
3 The offset in hexadecimal from the first byte of the dump.
4 The hexadecimal address of the first byte dumped on the line.
5 32 bytes of storage dumped as 8 single hexadecimal numbers.
6 The same 32 bytes of storage dumped in character form. Any byte values between X'00' and X'3F' are displayed as periods, however.

Usage Notes:

1. If an address that is not valid is detected, the following message is displayed instead of the storage contents:

   ```
   Inaccessible storage.
   ```

2. CEEHDMP suppresses multiple lines of identical data, as CEEVDMP does.

CEEBDMP — Control Block Dump Service

This low-level service dumps a control block with field identifiers. The fields themselves can be displayed in binary, hexadecimal, or character. CEEBDMP provides a standard format for control block dumps by determining how many fields to display on each line of a dump.

Syntax

void CEEBDMP (*title, title_length, address, offset, nfields, field_ids, field_lengths, field_types, fc*)

```
CHARn     *title;
INT4      *title_length;
INT4      *address;
INT4      *offset;
int4      *nfields;
VSTRING   *field_ids;
VSTRING   *field_lengths;
VSTRING   *field_types;
FEED_BACK *fc;
```

CEEBDMP

Call this CWI interface as follows:

```
L     R15,CEECAACELV-CEECAA(,R12)   Address of CAA in R12
L     R15,0052(,R15)
BALR  R14,R15
```

title **(input)**
A fixed-length character string that identifies the control block.

title_length **(input)**
A fullword binary integer containing the length of the title. The maximum length is 60 characters.

address **(input)**
The 31-bit address of the control block.

offset **(input)**
A fullword binary integer containing the offset from the address of the control block to the first field of the control block.

nfields **(input)**
A fullword binary integer containing the number of fields in the control block.

field_ids **(input)**
An array of 8-character strings. Each element in the array contains an identifier for a field in the control block. The elements appear in the array in the same order in which the fields are arranged in storage. If a field identifier is less than 8 characters long, it should be left justified and padded on the right with blanks.

field_lengths **(input)**
An array of fullword binary integers containing the byte length of the fields in the control block. For example, a fullword pointer would be 4 bytes long and thus have a length of 4. This table parallels the *names* array.

field_types **(input)**
An array of fullword binary integers containing codes for field dump formats. The codes are defined as follows:

1 Display the field in hexadecimal.
2 Display the field in binary.
3 Display the field in character.

fc **(output)**
A 12-byte feedback code passed by reference. The following symbolic conditions can result from this service; if more than one error condition occurs, the feedback code reflects the last diagnosed condition:

CEE000	Severity	0
	Msg_No	N/A
	Message	The service completed successfully.
CEE30T	Severity	2
	Msg_No	3101
	Message	The title string was longer than 60 characters.
CEE30V	Severity	3
	Msg_No	3103
	Message	An error occurred in writing messages to the dump file.

CEE313	Severity	3
	Msg_No	3107
	Message	Dump terminated before entire control block could be dumped because inaccessible storage was encountered.

The control block dump has the format shown in Figure 83.

```
 1          2
 ↓          ↓
TITLE:    00123456
  +000000  ABCDE....  12345678  ABCDE....  01010101  ABCDE....  abcdefgh  ABCDE.... 12345678  ABCDE....  01010101
  +00001C  ABCDE....  12345678  12345678              ABCDE....  abcdefgh  abcdefgh  abcdefgh
     ↑         ↑          ↑
     3         4          5
```

Figure 83. CEEBDMP Output Format

1 The name of the control block specified by the title argument.
2 The address of the control block.
3 The offset in the control block to the first field listed on the line. It is always preceded with a plus (+) or minus (-) sign.
4 The identifier for a field in the control block. The identifier can be up to 8 characters. It is padded with periods to make the field length 9 characters long.
5 The contents of the field. It is either a binary, hexadecimal, or character string. If the field is longer than 4 bytes and is displayed in hexadecimal, or longer than 1 byte and is displayed in binary, or longer than 8 bytes and displayed in character, then additional contents are displayed where the next field would normally be displayed, separated by two blanks. Examples of this form in hexadecimal and character are shown in the third line of the Output Format shown above. When displaying a field in character, any byte values between X'00' and X'3F' are displayed as periods.

Note: If an address that is not valid is detected, the following message is displayed instead of field identifiers and contents:

```
Inaccessible storage.
```

Other Dump-Related CWIs

The following CWIs, which are described in this section, provide additional dump-related services:

- CEE3CDO
- CEEKSNP
- CEEURTB

CEE3CDO — Check Dump Options

This callable service validates the options that could be passed to the Language Environment callable service CEE3DMP.

Syntax

void (*CEECELVKCDO) (*options, position, [fc]*)

```
VSTRING   *options;
INT4      *position;
FEED_BACK *fc;
```

CEECELVKCDO

Call this CWI interface as follows:

```
L     R15,CEECAACELV-CEECAA(,R12)   Address of CAA in R12
L     R15,3380(,R15)
BALR  R14,R15
```

options **(input)**

A halfword-prefixed character string containing options describing the type, format, and destination of dump information. Options are declared as a string of keywords separated by blanks or commas. Some options have suboptions which follow the option keyword and are contained in parentheses.

These are the same options supported by the Language Environment callable service CEE3DMP. For more information, see *z/OS Language Environment Programming Guide*.

position **(output)**

A fixed-binary(31) integer that is the index (character offset within the string) where the first option or delimiter that is not valid was discovered. If no errors are discovered, this value is zero.

fc **(output/optional)**

A 12-byte feedback code passed by reference. If specified as an argument, feedback information (a condition token) is returned to the calling routine. If not specified, and the requested operation was not successfully completed, the condition is signaled to the condition manager. The following symbolic conditions can result from this service; if several simultaneous error conditions occur, the feedback code reflects the last diagnosed condition:

CEE000	Severity	0
	Msg_No	N/A
	Message	The service completed successfully.
CEE314	Severity	2
	Msg_No	3108
	Message	An invalid option, suboption, or delimiter was found.

CEEKSNP — Produce a SNAP Dump

This CWI generates a system SNAP dump of the run-time environment. Once complete, execution continues.

Syntax

void (*CEECELVKSNP) (*id, reserved, [fc]*);

```
INT2     *id;
VSTRING   *reserved;
FEED_BACK *fc;
```

CEECELVKSNP

Call this CWI interface as follows:

```
L     R15,CEECAACELV-CEECAA(,R12)   Address of CAA in R12
L     R15,3392,R15
BALR  R14,R15
```

id **(input)**

An integer in the range 0 to 255 used in an identification string within the SNAP output.

reserved **(input)**

A halfword-prefixed character string reserved for future use. Its value must be a zero-length character string.

fc **(output/optional)**

A 12-byte feedback code passed by reference. If specified as an argument, feedback information (a condition token) is returned to the calling routine. If not specified, and the requested operation was not successfully completed, the condition is signaled to the condition manager. The following symbolic conditions can result from this service:

CEE000	Severity	0
	Msg_No	N/A
	Message	The service completed successfully.
CEE33R	Severity	1
	Msg_No	3195
	Message	The SNAP dump file could not be opened.
	Explanation	The SNAP dump file could not be opened.
	Programmer Response	If a SNAP dump was desired, determine the reason the file could not be opened and correct the problem.
	System Action	No SNAP dump was taken.
CEE33S	Severity	1
	Msg_No	3196
	Message	The ID number was not in the allowed range.
	Explanation	The ID number must be in the range 0 to 255; it was not in that range.
	Programmer Response	This is an internal problem. Contact your service representative.
	System Action	The ID number 255 was used.
CEE33T	Severity	1
	Msg_No	3197
	Message	An invalid value for *reserved* was passed.
	Explanation	An invalid value for the *reserved* argument was passed to the SNAP dump service.
	Programmer Response	This is an internal problem. Contact your service representative.
	System Action	The invalid value was ignored.

CEE33U	Severity	3
	Msg_No	3198
	Message	A SNAP dump was requested on an unsupported system.
	Explanation	The SNAP dump service was called to produce a SNAP dump on an unsupported system.
	Programmer Response	This is an internal problem. Contact your service representative.
	System Action	The SNAP dump was not produced.
CEE33V	Severity	3
	Msg_No	3199
	Message	An error was returned from the SNAP system function.
	Explanation	The SNAP system function returned an error. The SNAP dump service could not be completed.
	Programmer Response	This is an internal problem. Contact your service representative.
	System Action	The SNAP dump was not produced.

Usage Notes:

1. This service is not available under CICS. Calling it when executing under CICS results in feedback code CEE33U.
2. The ddname used is CEESNAP. If CEESNAP is not defined then no dump is produced and CEE33R is returned.
3. CEEKSNP uses the SDATA=(ALL) SNAP option, which dumps items such as the PSA, SQA, SWA, I/O supervisor control blocks, etc., and the PDATA=(ALL) SNAP option, which dumps items such as the JPA, LPA, virtual storage subpools (0-127, 252), etc.
4. The contents of the SNAP dump reflects the state of the registers and memory at the time the SNAP macro is called.

CEEURTB — Produce a User Routine Traceback

The CEEURTB CWI generates a traceback of user routines from the point of the call to CEEURTB. The traceback consists of, where determinable, entry name, program unit name, statement number, offset and entry address. The output of the traceback is directed to the MSGFILE. When complete, execution continues.

Syntax

void (*CEECELVMURTB) (*levels, [fc]*);

```
INT4      *levels;
FEED_BACK *fc;
```

CEECELVMURTB

Call this CWI interface as follows:

```
L     R15,CEECAACELV-CEECAA(,R12)   Address of CAA in R12
L     R15,3368(,R15)
BALR  R14,R15
```

levels **(input)**
A fixed-binary(31) number representing the maximum number of levels of user routines to trace back. If *levels* is 0, then all user routines are traced back.

fc **(output/optional)**
A 12-byte feedback code passed by reference. If specified as an argument, feedback information (a condition token) is returned to the calling routine. If omitted, and the requested operation was not successfully completed, the condition is signaled to the condition manager.

The following symbolic conditions can result from this service:

CEE000	Severity	0
	Msg_No	N/A
	Message	The service completed successfully.
CEE30Q	Severity	3
	Msg_No	3098
	Message	The user routine traceback could not be completed.
	Explanation	The user routine traceback could not be completed due to an error detected in tracing back through the DSA chain.
	Programmer Response	Attempt to perform problem determination through the use of a dump.
	System Action	The user routine traceback is not completed.

Usage Notes:

1. *levels* refers to the number of program unit level qualifiers within an application. For example, nested PL/I begin blocks are treated as one level.
2. If *levels* is 1, the format of the traceback is as follows. The traceback is in text; the traceback stops at the first program unit level qualifier. For example, nested PL/I begin blocks are treated as one level.

```
from entry BEGIN BLOCK at entry offset +00000082 at address 00020D70
from entry EXT_AB at entry offset +00000036 at address 00020D78
from entry EXT_01 at entry offset +00000040 at address 00020C58
from program unit DUMP03 at entry LABEL_E: BEGIN at statement 22 at offset
+00000082 at address 00020598
```

3. If *levels* is 0 (complete traceback) or greater than 1, the traceback is generated in a table format for the requested number of levels. The format of the traceback is as follows.

```
traceback of user routines:
Program Unit  Entry           Statement PU Offset Entry Offset Address
              BEGIN BLOCK               +00000D70   +00000082  00020D70
              EXT_AB                    +00000D28   +00000036  00020D28
              EXT_01                    +00000C58   +00000040  00020C58
DUMP03        LABEL_E: BEGIN
                                     22 +00000598   +00000082  00020598
DUMP03        E                      21 +000004F8   +00000082  000204F8
DUMP03        D                      17 +00000454   +00000086  00020454
DUMP03        %BLOCK5                14 +000003AC   +0000008E  000203AC
DUMP03        C                      13 +00000318   +0000007E  00020318
DUMP03        B                      11 +0000020C   +000000EE  0002020C
DUMP03        A                       6 +0000015C   +00000092  0002015C
DUMP03        DUMP03                  4 +000000AC   +000000AC  000200AC
```

Tracing Services

The TRACE run-time option controls whether tracing is active, the size of the trace buffer, the type of trace events to record, and whether a dump containing only the trace table should be taken at enclave termination. TRACE establishes the setting that indicates if the trace facility is active.

Syntax

```
                   ┌─OFF─┐                          ┌─DUMP───┐
►►──TRACe──(──┼─────┼──,──┼─────────────┼──,──┼────────┼──,──┼─────────────┼──►
              └─ON──┘     └─table_size─┘     └─NODUMP─┘     └─LE=──n──┘

►──,──┼─────────────┼──,──┼─────────────┼──)──────────────────────────────►◄
      └─IDx──=──n──┘     └─memid=──n──┘
```

ON
Indicates the tracing facility is active.

OFF
Indicates the tracing facility is inactive; this the default.

table_size
Determines the size of the trace table and is specified in bytes or as *n*K.

DUMP
Requests that a Language Environment formatted dump, containing at a minimum the trace table, be taken at program termination (normal or abnormal) independent of the setting of the TERMTHDACT run-time option.

LE=
Requests global trace for all Language Environment members to generate trace records into the trace table.

All members include Language Environment as well as z/OS C/C++, Berkeley sockets, and DCE.

The number that can be specified on this parameter is only the global trace levels (for a description of global and member-specific trace levels, see the description of *n* below). The value is limited to a range of 0–FF

ID*x***=**
Identifies a specific Language Environment member ID that generates trace records for the trace table. This parameter is to be used only under the direction of IBM service.

x Specifies the member ID number, where *x* can be an integer from 1-17, inclusive. More than one **ID***x* = *n* can be specified at a time.

memid=
A symbolic name of the following specific Language Environment members:

Member	Description
CEL	Language Environment member ID of 1
C370	Language Environment member ID of 3 (C/C++)
DCE	Language Environment member ID of 8
PLI	Language Environment member ID of 10

Specific member tracing is specified by either the **IDx**= or the *memid*= parameter. For example, C run-time library tracing can be specified either as ID3= or C370=; CEL can be specified as ID1= or CEL=. More than one *memid*= can be specified at a time.This parameter is to be used only under the direction of IBM service.

n A hex number that represents a 32-bit mask where each bit is associated with a specific trace type. The *n* value can be a maximum of 8 characters that represent a maximum of 8 hex digits. If less than 8 hex digits are specified, the value is padded on the left with zeroes (for example, 17 represents X'00000017').

The low-order eight bits are reserved for global trace events (those that apply to all Language Environment members).

Global and Member-Specific Tracing

Every Language Environment member has a 32-bit field that contains its trace levels (or trace types). The first 24 bits are defined by each member; these bits are referred to as the member trace levels. Language Environment defines the last 8 bits to have one specific meaning across all Language Environment members; these bits are referred to as the global trace levels. In Language Environment, only four of the eight global trace levels are defined:

0 No tracing
1 Library entry and exit trace
2 Locking trace
4 Monitor call

For a description of trace types 1 and 2, see *z/OS Language Environment Debugging Guide*. Trace type 4 enables and disables monitor call number 1351.

Global trace levels can be set in two ways. First, using the **LE**=*n* option on the trace run-time option. You can activate either of the global trace options by specifying **LE**=*1*, **LE**=*2*, or both of the global traces by specifying **LE**=*3*. Second, using the low-order 8 bits of the 32-bit field for specific member using the *memid=* suboption or the *IDx=* suboption. You can activate the library entry and exit global trace for callable service calls and return to Language Environment by specifying **CEL**=*1*. Note the X'01' is the low-order 8 bits of the 32–bit field.

A member can choose not to implement one of the global trace levels, but it must not redefine the meaning of the low-order 8 bits.

The member-specific trace suboption for the C/C++ library is called C370. For the TRACE option, the terms C/370, C370, and C/C++ are used interchangeably. In all cases they refer to the C/C++ language-specific run-time library component of Language Environment. Some examples of the trace setting are:

TRACE(ON,,,LE=1)
Set global trace type 1 (RTL entry/exit) tracing

TRACE(ON,,,LE=2)
Set global trace type 2 user mutex and condition variable tracing

TRACE(ON,,,LE=3)
Set both trace types 1 and 2

TRACE(ON,,,CEL=1)
Set Language Environment callable service entry/exit tracing

TRACE(ON,,,C370=1)
Set C/C++ run-time library function entry/exit tracing

TRACE(ON,,,LE=1,CEL=100,C370=200)
Set the first Language Environment trace plus the second C/C++ trace and the first global trace level for all members in the application

TRACE(ON,,,LE=1,CEL=102,C370=200)
Set the first Language Environment trace plus the second global trace but only for Language Environment, plus the second C/C++ trace and the first global trace level for all members

TRACE Run-Time Options Usage Notes

The IBM-supplied default is TRACE(ON, 4K, LE=0, CEL=700).

The TRACE suboptions for member-specific tracing are not recommended for regular use, but are used by customers under the direction of IBM service.

CEEKCTRC — Add a Trace Table Entry

CEEKCTRC is a CWI callable service that adds a Trace Table Entry (TTE) to the single trace table.

Syntax

void CEEKCTRC (*trace_buffer, [trace_buffer_len]*)

```
CHAR4     *trace_buffer;
INT4      *[trace_buffer_len];
```

CEEKCTRC
Call this CWI interface as follows:

```
L     R15,CEECAACELV-CEECAA(,R12)   Address of CAA in R12
L     R15,3480(,R15)
BALR  R14,R15
```

trace_buffer **(input)**
The trace buffer to be included in the TTE when it is added to the trace table. It is the caller's responsibility to provide the trace buffer with the member ID and the member-specific type along with the member-specific information, if any.

trace_buffer_len **(input)**
The length of the trace buffer. The minimum length is 8 bytes (which includes the member ID and the member-specific Type), and the maximum length is 112. If omitted, 112 is assumed. The format of the first 8 bytes is as follows; the remaining 104 bytes are member-definable:

Byte	Usage
0	Member ID
1-3	Member-defined flags
4-7	Member-defined trace record type

Usage Notes:

1. Callers of this service do not need to have acquired a new stack frame, because this service has a dedicated save area for its use.
2. The CWI adds the timestamp and the thread ID to the TTE.
3. Caller's of this CWI must first test the **CEECAA_TRACE_ACTIVE** flag before calling this CWI.
4. The trace CWI can be called:
   - From the start of member enclave initialization
   - To the end of member enclave termination
   - Excluding member dump processing

Calls to the CEEKCTRC CWI should be conditional. It is the responsibility of the caller to insure this. All trace points in the RTL would follow the basic structure shown in Figure 84.

```
At member enclave initialization, the member's unique trace levels
and the low-order 8 bits of the global trace levels from the OCB
should be merged and stored in a 32-bit field in the member's
thread-level control block, such as:

     struct {                 /* Trace levels:                    */
                              /*  Combination of 24 member        */
                              /*   unique trace levels and 8      */
                              /*   global trace levels            */
                              /*                                  */
                              /*  Member unique trace levels:     */
        int free_1     : 21;  /*   'FFFFF8..'x -       */
        int TraceType3 : 1;   /*   '.....4..'x - Trace type 3     */
        int TraceType2 : 1;   /*   '.....2..'x - Trace type 2     */
        int TraceType1 : 1;   /*   '.....1..'x - Trace type 1     */
                              /*                                  */
                              /*  Global trace levels:            */
        int free_3     : 6;   /*   '......FC'x -       */
        int RtlLocks   : 1;   /*   '.......2'x - RTL/user locking */
        int RtlFunc    : 1;   /*   '.......1'x - RTL function     */
                              /*                 entry/exit       */
     } Trace;                 /*                                  */

At every trace point, the following code would be used to test
for trace active and that this specific trace type has been requested.

     #include "the file that contains your trace structure"
           .
           .
           .

     if ((ceecaa_trace) &&     /* Trace is active                 */
         (Trace.TraceType1)) { /* and specific trace type was     */
                               /* specified                       */
        Format trace entry
        Invoke CEEKCTRC
     }
```

Figure 84. Example: Calling the CEEKCTRC CWI from the C RTL

Chapter 13. Subsystem Considerations

Language Environment provides support which, when used in conjunction with facilities provided in CICS Version 4 Release 1, gives programmers the ability to write and run Language Environment-enabled command level application programs (run units) in the CICS environment.

Note: Fortran is not supported in this environment.

When this support is used, CICS appears to the Language Environment-enabled program essentially as an operating system, and provides all job, task, and program management facilities. If CICS is being run in 31-bit mode under z/OS, this support permits Language Environment-enabled application programs to run in either 24-bit mode or 31-bit mode. Language Environment-enabled application programs also run on CICS under z/OS.

Communication between a Language Environment-enabled program (run unit) and a non-Language Environment-enabled program (run unit) can be accomplished with CICS facilities such as EXEC CICS LINK and XCTL commands.

CICS and POSIX

Applications running with POSIX(ON) and not supported under CICS; if you try running an application with POSIX(ON) under CICS, you receive a warning message and execution continues.

Background Information

The following sections provide some background information necessary before a detailed discussion of CICS.

Terminology

The following terminology is unique to the CICS environment. The Language Environment program model under batch environment defines some of the terms differently. Section “Language Environment-CICS and Language Environment-Batch Program Models” on page 400 attempts to correlate these two program models.

CICS
CICS is a licensed program product that runs on S/370, ESA/370, and ESA/390 architectures. It consists of a general purpose data communication or on-line transaction processing system, an on-line system controller, and some batch utilities capable of supporting a network of many thousands of terminals. It is used for commercial business transactions, rather than primarily scientific or engineering work. Throughout this section, the term “CICS” indicates CICS/ESA®, CICS/MVS®, or both; it does not indicate CICS/VM™, unless an explicit reference is required.

Translator
A CICS Command Language Translator takes the application program source code and translates the CICS commands into the appropriate language statements. It also provides useful diagnostics.

Partition
A fixed-size subdivision of main storage allocated to a job step or system task. For example, a partition is established during a CICS initialization (start-up job). Partition initialization is creation of an environment which is common to all transactions running in that environment.

© Copyright IBM Corp. 1991, 2002

Thread
A collection of (or a transaction consisting of) one or more run units (programs), each of which can be at a different language level. There can be multiple threads (transactions) running in parallel within a single CICS partition. The run units in a thread communicate with each other only by issuing EXEC CICS LINK or XCTL commands.

Transaction
A piece of processing initiated by a single request (transaction ID code), usually from a terminal. A single transaction consists of one or more application programs (run units) that, when run, carry out the processing needed.

Task The CICS activity necessary to set up and run an application program on behalf of a user is called a task. A task is, in the simple case, an instance of a transaction.

A task can read from and write to the terminal, read and write files, start other tasks, and do many other things. All these activities are controlled by and requested through CICS commands in the application program. CICS manages many tasks at the same time. The number of tasks running at any one instant depends on the characteristics of the processor.

Run unit
A statically and/or dynamically bound running set of one or more programs (defined below) that communicate with each other by CALL statement. In a CICS environment, a run unit is called at the start of a CICS task (triggered by entering a transaction ID at the terminal) or by issuing EXEC CICS LINK or EXEC CICS XCTL commands from another run unit. Each run unit has its own Language Environment environment.

Program
A running (link-edited load module) set of one or more object programs that communicate with each other by static CALL statements. Unlike run units, programs are called with dynamic CALLs (through use of EXEC CICS LOAD). Programs that call each other dynamically are part of the same run unit. They run in the same Language Environment environment as their caller. A program must be defined as a single entry in PPT. Notice that a single run unit can have multiple programs separately link-edited with separate PPT entries.

Language Environment-Enabled Program
A program with a special layout entry that contains Language Environment eye catcher (CEE) and references to Prolog Information Blocks. This is also referred to as a Fully Language Environment-Enabled program. Prolog Information Blocks contain information that is needed by Language Environment while the program is running. For more information on requirements of being a Language Environment-Enabled Program, see “Routine Layout” on page 4.

Object Program
A set or group of machine language instructions that can be run, and other material designed to interact with data to provide problem solutions. Object programs are generated as a result of source program compilation (or assembly).

Compiler
A program that translates a program written in an HLL into a machine language object program.

Working Storage
Depends on the programming language of the application program, as follows:

ASM The storage defined in the current DFHEISTG DSECT.

COBOL
All data storage defined in the WORKING-STORAGE section of the program.

Except for COBOL programs, working storage starts with a standard format register save area; that is, R14 and R12 are stored at offset 12 and R13 at offset 4.

Token A group of language characters that logically belong together. Tokens such as keywords, symbols and storage addresses are used to identify a given environment.

Language Environment adopts storage addresses as environment tokens. Partition, thread and run unit tokens are double-word. The first word is zero and the second word is a 31-bit address.

LIBVEC
A Language Environment vector transfer table, which is part of CEEPCOM and contains a series of slots, one for each Language Environment routine called. A slot is also provided for special CICS routines.

PCT CICS Program Control Table that defines the transactions known to the system.

PPT CICS Processing Program Control Table that defines all the application programs and maps in the system, and also various CICS modules and tables.

Running a Program under CICS

It is useful to review some contextual information about running an application program under CICS before we proceed. Most importantly, the words run unit and program require some clarification.

The general concept of application program management under CICS is as follows:

An event, generally receipt of an input message containing a transaction ID code, or possibly receipt of data identifying some other event which has been equated to a transaction ID code, (a 3270 terminal Program Function Key), triggers a CICS transaction.

CICS looks up the transaction ID code in the Program Control Table (DFHPCT) and extracts from that table the name of the program (or at least the first program) that is to process the transaction.

In preparation for running this program (and any other programs subsequently called as part of this transaction), the CICS Task Management Program attaches a CICS task to define the transaction as an item of work dispatchable by the CICS task dispatcher. This task is purely a CICS task, not an operating system task.

When the transaction processing task exists, the CICS Program Control Program looks up the identity of the required program in the Processing Program Table (DFHPPT) that contains information about programs (for example, language, whether in storage or not, use count, and entry point address). Next, the CICS Program Control Program loads the program into storage if necessary and calls run-time language interface module (loaded during CICS initialization) to initialize the run-time environment and call the program.

This program need not perform all the processing associated with a transaction. It can request to call other programs with EXEC CICS LINK, EXEC CICS XCTL, or a language CALL construct. Each program identified in such a request is accessed

and called with its entry in DFHPPT just as the first one was. From the CICS program management point of view, initiation of the first application program associated with this transaction task marks the beginning of a thread of programs.

This thread of programs can traverse only one program or many programs, all called in the service of the original transaction. Each such program must have an entry in the PPT and must be loadable by the CICS program loader. It must be a link-edited load module. It can contain a single object module or object modules produced by several compilations and combined by the linkage editor. Within the load module, the component modules can call each other with CALL statements, or function invocations, but CICS has no knowledge of this.

Each program (link-edited load module with a PPT entry) can be written in any language that is compatible with CICS (COBOL, C/C++, PL/I, or assembler). When a program is called through CICS facilities, it represents a run unit and has its own Language Environment environment. Statically linked ILC applications are supported under CICS between COBOL, C/C++, and assembler. Both static and dynamic ILC between PL/I, COBOL, and C are supported under CICS.

CICS discourages the coding of large or complex programs and encourages the implementation of complex transactions by the use of several programs called with, and communicating by means of, CICS facilities.

In summary, for the rest of this discussion, the term program in the Language Environment-CICS application environment means a link-edited load module with a PPT entry, consisting of at least one program's object module and perhaps other object modules. Such a program, when called with CICS facilities (EXEC CICS LINK or XCTL), represents a run unit and has its own Language Environment environment. The terms run unit and program can loosely be used unless an attention to a particular one is required.

Language Environment-CICS and Language Environment-Batch Program Models

The following illustration and notes describe the correlation between the Language Environment-CICS program model and the Language Environment-batch program model.

In general, the CICS Subsystem itself is not implemented as a Language Environment-enabled application. However, it is presented here in the form of a Language Environment-enabled application to illustrate the relationship of the two program models.

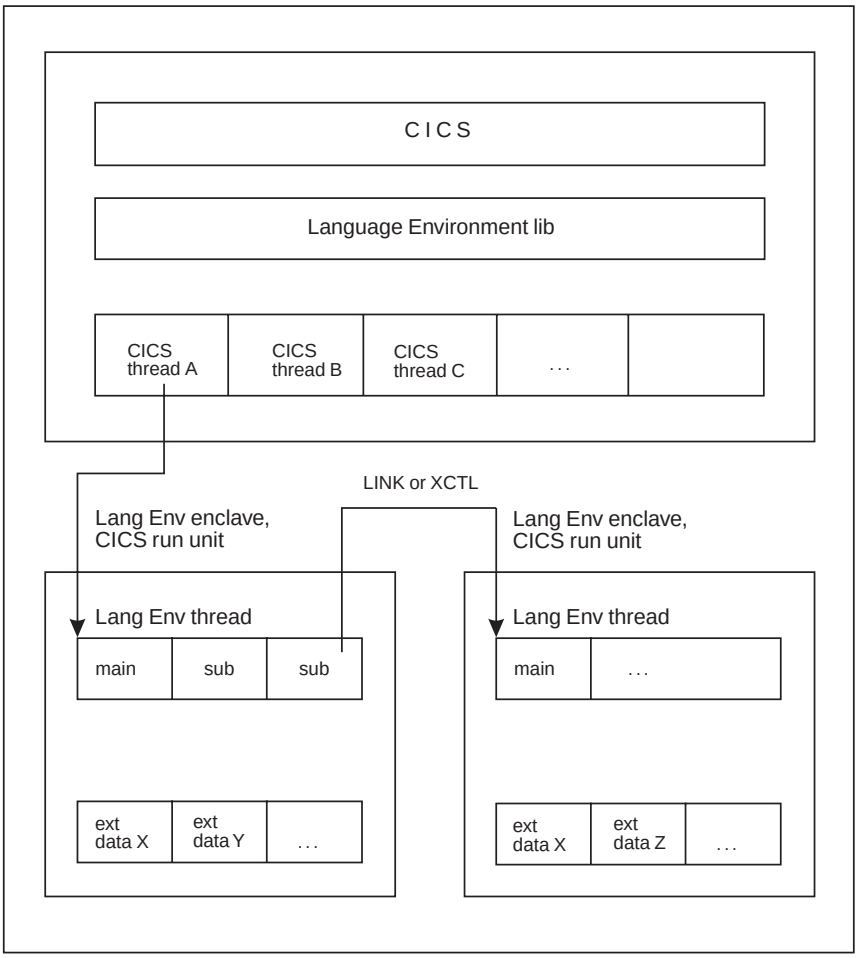

Figure 85. Language Environment-CICS and Language Environment-Batch Program Model

Notes:

1. Language Environment `Process` in the Language Environment-batch program model is the same as the CICS `Partition` in the Language Environment-CICS program model – an address space that consists of at least one enclave (CICS run unit), a collection of code and data. Unlike the Language Environment process, a character string argument (containing the run-time options) cannot be passed to the CICS partition. Also, default overrides cannot be passed to the CICS partition.
2. As in Language Environment process initialization, the anchor vector is set up at CICS partition initialization.
3. The Language Environment-batch program model does not provide an equivalent term to the CICS `Thread` in the Language Environment-CICS program model. The sequence of currently active CICS run units (Language Environment enclaves) for a single transaction is called a CICS `Thread`.
4. The CICS `run unit` in the Language Environment-CICS program model is an equivalent of the Language Environment `Enclave` in the Language Environment-batch program model.

   The CICS `run unit` initialization in the Language Environment-CICS program model is same as the Language Environment `Enclave` creation in the Language Environment-batch program model.

5. Unlike the Language Environment-batch program model, the Language Environment-CICS program model only supports a single Language Environment thread within an enclave (CICS run unit). Multiple Language Environment enclaves within a process (CICS partition) are supported.

   Transfer of control within an enclave in the Language Environment-CICS program model is only accomplished with the CALL statement. Unlike the Language Environment-batch program model, transfer of control within an enclave with Language Environment thread creation service is not supported in the Language Environment-CICS program model.

   The Language Environment-CICS program model does not support the multitask function of the Language Environment-batch program model. It supports the multithread function of CICS.
6. As in the Language Environment-batch program model, one enclave can transfer control to another enclave in the Language Environment-CICS program model. This happens as a result of running EXEC CICS LINK or EXEC CICS XCTL from the CICS run unit within the enclave.
7. In the Language Environment-CICS program model, abend propagation continues to be allowed only if the enclave (run unit) was created using the EXEC CICS LINK command.
8. All other definitions in the Language Environment-batch program model apply to the Language Environment-CICS program model.

Language Environment-CICS Interface

Language Environment provides an environment (Language Environment-CICS interface) that supports application programs (transactions) written in HLLs under CICS. The Language Environment-CICS interface routine (CEECCICS) uses the API and ERTLI protocols provided by CICS extensively. The Language Environment-CICS interface routine is link-edited as RMODE(ANY) and is called by CICS in AMODE(31).

In summary, the interface between Language Environment and CICS is accomplished through:

1. A CALL interface (ERTLI) from CICS to Language Environment with the Language Environment-CICS interface control routine CEECCICS.
2. EXEC CICS commands issued by Language Environment routines where appropriate to request CICS system services.

Languages Supported

The primary languages that CICS provides specific command translators for, and which are supported within Language Environment-CICS environment include: COBOL, PL/I, C, C++, and assembler.

Description

Language Environment provides the following support for member-language libraries and application programs (transactions) running under CICS:

- Language Environment-CICS interface control module
- Language Environment partition initialization/termination
- Language Environment thread initialization/termination
- Language Environment run unit (program) initialization/invocation/termination
- Program management
- Storage management
- Exception handling

- Message services
- Dump services
- Enclaves

Extended Run-Time Language Interface

The extended run-time language interface protocol is a set of special calls made from CICS to the Language Environment-CICS interface control module CEECCICS. Language Environment library routines call CICS services with the API protocol (command level interface). Following is a list of run-time language interface calls made to the Language Environment-CICS interface routine by CICS:

Partition Initialization Call
: Made for Language Environment enablement during CICS initialization.

Partition Termination Call
: Made for Language Environment disablement during CICS shut-down.

Establish Ownership Type Call
: Made to identify the language of the application program. A Language Environment-enabled application program can be written in any Language Environment-enabled language.

Thread Initialization Call
: Made for thread (transaction) initialization.

Thread Termination Call
: Made for thread (transaction) termination.

Run Unit Initialization Call
: Made for run unit (program) initialization.

Run Unit Begin Invocation Call
: Made to begin run unit (program) invocation.

Run Unit End Invocation Call
: Made to end run unit (program) invocation.

Run Unit Termination Call
: Made for run unit (program) termination.

Error Recovery
: Enables the Language Environment-CICS interface routine to perform error recovery processing, if possible.

Working Storage Address Call
: Made for determining program working storage address in order to display the storage during program debugging using CICS EDF.

Perform GOTO Call
: Made for transferring control to a condition label specified by the EXEC CICS HANDLE CONDITION condition (label), or EXEC CICS HANDLE AID option (label), or EXEC CICS HANDLE ABEND LABEL (label) commands in the program.

ERTLI General Call Syntax

The following general syntax is used to describe each of the above CICS calls to the Language Environment-CICS interface routine (CEECCICS). Note that this syntax is different than the Language Environment callable services syntax described elsewhere in this book. The syntax used for CICS calls here is merely for better description, convenience and ease of understanding.

Syntax

Call CEECCICS (*function, rsncode, args...*) **Retcode** (*rc*)

function
A fullword integer (a binary value) function code describing the function to be performed.

rsncode **(output)**
A fullword integer that contains the Language Environment or member language-specific reason code when the function is not performed successfully (*rc* = 16). CICS issues a message (to the operator's console) quoting this reason code returned by Language Environment and abends the task. The reason code format is *nnnffrr*:

nnn 3-digit member ID, 000-127 for IBM and 128-255 for non-IBM products (001 for Language Environment and 005 for COBOL).
ff 2-digit function code (10 for partition initialization).
rr 2-digit unique reason code within a function.

args...
Additional arguments based on the function being performed.

rc **(output)**
A fullword integer that contains the return code that is passed back in R15. It can contain one of the following values:

0 Function was performed successfully.
16 Function was not performed successfully. The *rsncode* parameter contains a code that describes the reason for the failure.

ERTLI Conventions

To avoid confusion, the following conventions are used in describing the extended run-time language interface:

- SYSEIB translator option:

  The Language Environment library routines that use the EXEC CICS commands must be translated with the SYSEIB translator option. As a result, a second EIB called system EIB (different from the user EIB) is used to contain information regarding the commands issued by Language Environment routines. There is no need to save and restore the user EIB around the commands issued by Language Environment routines. A routine translated with the SYSEIB option must:

  – Run in AMODE(31) as the system EIB is located above 16M.
  – Obtain the address of the system EIB using the EXEC CICS ADDRESS EIB command. This command returns system EIB address only if the routine is translated with SYSEIB option. Otherwise, it returns the user EIB address. Notice that for the Language Environment-CICS interface routine, CICS passes the system EIB address in the argument list of the ERTLI calls.
  – Be aware that use of the SYSEIB translator option implies use of the NOHANDLE option on the commands.
  – Copy all relevant fields from the system EIB to program instance local storage as soon as possible (this is because there is only one system EIB); for example, before running:
    - Another EXEC CICS command
    - A native language call or function or service that can run one or more EXEC CICS commands

- Register usage:

  With all the above calls made by CICS to the Language Environment-CICS interface routine or made by the Language Environment-CICS interface routine to the member language-specific interface routines, the following standards apply:

  R1 Address of the stored argument list

R13 Address of register save area
R14 Return address
R15 Entry point address on entry (for example, CEECCICS)
R15 Return code on return

- Argument list:

  The argument list is shown in Figure 86.

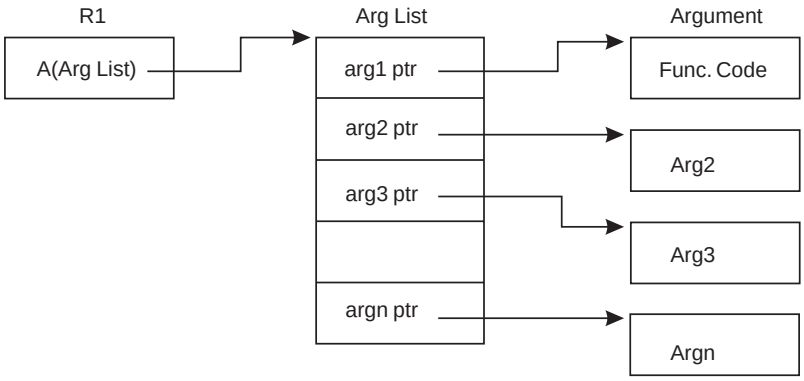

Figure 86. CICS Call Argument List

- Each item in the argument list passed by CICS is the address of the corresponding argument. The last argument does not have the high-order bit on for calls to member-specific ERTLI.
- The first argument is always a pointer pointing to a fullword binary value which identifies the function to be performed. The meaning of the remaining arguments depends on this function code. The actual argument list for each of the above ERTLI calls are described later in this document.
- When the *n*th argument is described as THING, it means that the *n*th word of the stored argument list is the address of THING (*n* starts at 1 for the first argument of the call).
- Where the callee (Language Environment-CICS interface control routine) sets a value in THING, THING is called a RECEIVER (output) argument. Notice that the special calls provided for COBOL to call CICS services have been replaced by receiver arguments on the CICS to Language Environment calls (ERTLI).
- Language Environment adopts storage addresses as environment tokens. Partition, thread, and run unit tokens are doublewords. The first word is zero and the second word is a 31-bit address.
- All addresses in the interfaces are assumed to be 31-bit addresses. Where a described address is the address of a routine, the top bit is set to indicate the addressing mode in which the routine is called. The bit is set ON to indicate AMODE(31). This mode is set by the caller before passing control to the routine.
- The program (run unit) entry point address passed by CICS is a doubleword entity. The first word is the actual entry point address and the second word is zero.
- If the Language Environment-CICS interface routines change the program mask, it must be restored before control is returned to CICS.
- On return from these calls, CICS expects a zero value in R15 for a successful call; for an abnormal return, R15 should contain a nonzero value (16). CICS issues a message quoting the reason code returned by Language Environment in the argument list of these calls. The possible reason codes are described under each call discussion.

Flowchart of Activities

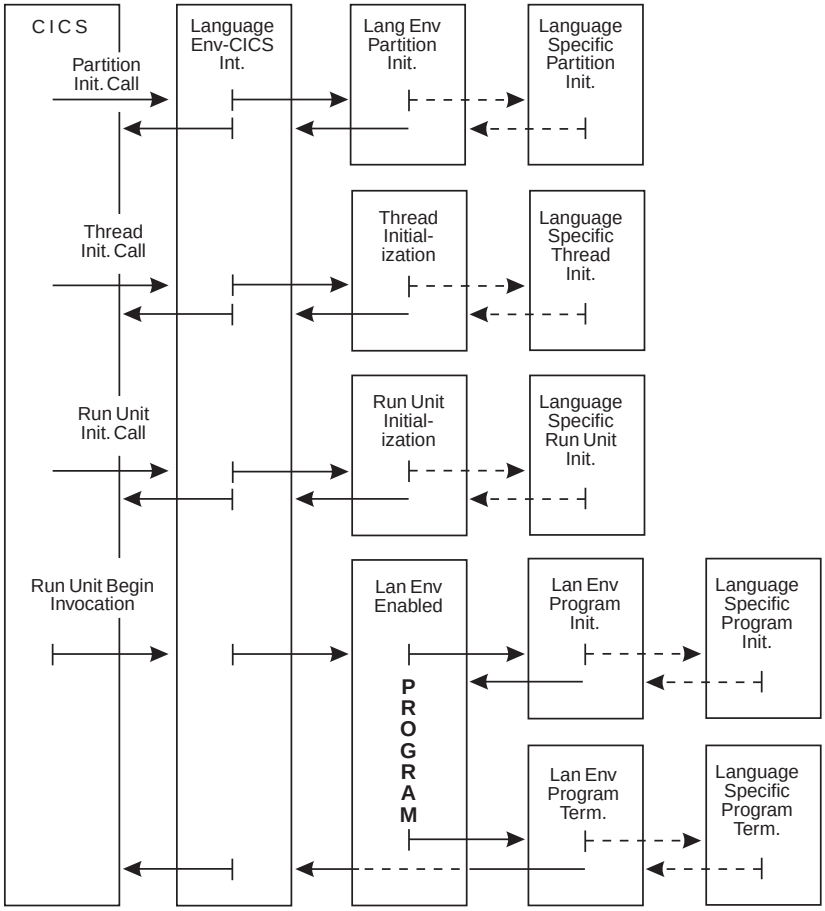

Figure 87. Language Environment-CICS Run Unit Initialization, Invocation, and Termination

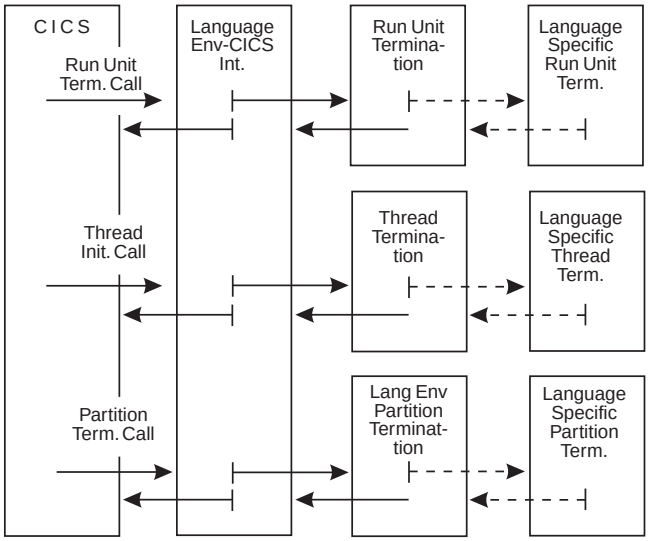

Figure 88. Language Environment-CICS Run Unit Termination

Language Environment-CICS Interface Routines' DSA

To ensure reentrancy of the Language Environment-CICS interface routines and the language-specific Language Environment-CICS interface routines, a Dynamic Storage Area (DSA) is acquired at partition and thread initialization to be used for stack frames. Run unit initialization routines use the DSA acquired at thread initialization. This temporary stack mechanism is modeled after the Language Environment stack mechanism. The length of this stack storage is predetermined and should be greater than the sum of all possible active stacks used by Language Environment-CICS interface routines. The maximum length of the stack is 1024 bytes. If exceeded, an ABEND of 4093 is issued.

The Language Environment stack mechanism provides consistency with batch environment in terms of calling a common set of Language Environment routines such as option processing, storage management, and exception handling.

Partition Initialization (Language Environment Enablement)

Enablement of Language Environment is performed by a partition initialization call to the Language Environment-CICS interface module during CICS initialization.

CICS loads (OS conditional load) and call the Language Environment-CICS interface module (CEECCICS) during the system initialization. CEECCICS must be in an authorized data set for the OS LOAD to be successful.

If CICS can not load the Language Environment-CICS interface module no message is issued and processing continues without Language Environment. If the Language Environment partition initialization fails, CICS outputs a message quoting the reason code returned by Language Environment and continue processing as if Language Environment is not present.

The Language Environment-CICS interface module communicates with CICS with ERTLI and EXEC CICS commands and with Language Environment with standard CALLs to enable and maintain the Language Environment environment. Another similar interaction disables the Language Environment environment in response to CICS shut-down processing.

The Language Environment-CICS interface module remains in storage to support communication between CICS and Language Environment as long as Language Environment is enabled.

Syntax

Call CEECCICS (10, *rsncode, syseib, preasa, ptoken, eiblen, twalen, cellevel, getcaa, setcaa, partinit_flags, langavl)* **Retcode** (*rc*)

rsncode **(output)**
A fullword integer in *nnnffrr* format to contain the member language-specific partition initialization reason code or one of the following Language Environment reason codes:
11000 Invalid parameter was passed
11010 Storage was not available
11020 The library was not loaded
11030 Language-specific partition initialization was not done

syseib
The system EXEC interface block, as defined by CICS. This control block

contains information about running the CICS commands issued by Language Environment. There is no need to save and restore the user EIB around the commands issued by Language Environment. The system EIB address is above 16M. For the information contained in the EIB, see *CICS Application Programming Reference*.

preasa
A preallocated save area to be used by Language Environment to issue its first EXEC CICS GETMAIN command. The size of this save area is same as the size of DFHEISTG (248 bytes).

ptoken **(output)**
A doubleword value to contain a token representing the Language Environment partition environment.

eiblen
A fullword integer containing the system EIB length.

twalen **(output)**
A fullword integer that contains the length of the preallocated thread work area. This work area is allocated by CICS from the user (task local) RMODE(ANY) storage for each thread, and passed to the Language Environment-CICS interface at thread initialization. The work area address is above 16M.

You can return a length equal to 0. In this case, you must acquire the thread work area (if one is required) during thread initialization using EXEC CICS GETMAIN command.

cellevel **(output)**
A fullword integer that contains the Language Environment-CICS interface level.

getcaa
The CICS specific GET_CAA routine address. This routine returns the CAA address of the current run unit. It runs in AMODE=ANY,RMODE=24.

setcaa
The CICS specific SET_CAA routine address. This routine is called to set the current run unit's CAA address in a CICS control block for a later retrieval with GET_CAA routine. It runs in AMODE=ANY,RMODE=24.

partinit_flags **(input/output) * Formerly 'langdef' ***
A 32 byte flag field used to communicate interface information between CICS and Language Environment. The structure is depicted in Figure 89.

```
DCL 1 PARTINIT_FLAGS,                  /* CICS/Lang Env interface flags      */
      2 CICS_FLAGS       BIT(128),     /* CICS interface level flags         */
        3 CICS_PROG_OBJ     BIT(1),    /* CICS supports program objs         */
        3 Reserved          BIT(1),    /* Reserved for CICS                  */
        3 CICS_OTE_PHASE1   BIT(1),    /* CICS is at Phase I of OTE          */
        3 CICS_REUSE_RWA    BIT(1),    /* CICS supports reusable RWAs        */
        3 CICS_OTE_PHASE2   BIT(1),    /* CICS is at Phase II of OTE         */
```

Figure 89. Structure of Interface Flags Field (Part 1 of 2)

```
    3 CICS_LDMDNAME     BIT(1),     /* CICS provides program name         */
    3 CICS_AUTOTUNE     BIT(1),     /* CICS supports automatic storage    */
                                    /* tuning.                            */
    3 CICS_AUTOTUNE_SET BIT(1),     /* CICS indicates automatic storage   */
                                    /* tuning should be done. This bit is */
                                    /* valid only if AUTOTUNE is ON.      */
    3 CICS_RE           BIT(1),     /* CICS supports reusable enclaves    */
    3 Reserved          BIT(1),     /* Reserved for CICS                  */
    3 CICS_TRAN         BIT(1),     /* CICS indicates transaction dump    */
                                    /* service routines are available.    */
    3 Reserved          BIT(117),   /* Reserved for future use            */
  2 LE_FLAGS         BIT(128),      /* Lang Env interface level flags     */
    3 LE_PROG_OBJ       BIT(1),     /* Lang Env supports program objs     */
    3 Reserved          BIT(1),     /* Reserved for CICS                  */
    3 LE_OTE_PHASE1     BIT(1),     /* Lang Env is at Phase I of OTE      */
    3 LE_REUSE_RWA      BIT(1),     /* Lang Env supports reusable RWAs    */
    3 LE_OTE_PHASE2     BIT(1),     /* Lang Env is at Phase II of OTE     */
    3 LE_LDMDNAME       BIT(1),     /* Set by Lang Env to indicate that   */
                                    /* it needs the address of the load   */
                                    /* module name in pgminfo1 (for the   */
                                    /* storage tuning exit).              */
    3 LE_AUTOTUNE       BIT(1),     /* Lang Env supports automatic        */
                                    /* storage tuning.                    */
    3 LE_AUTOTUNE_SET   BIT(1),     /* Lang Env indicates automatic       */
                                    /* storage tuning will be done.       */
    3 LE_RE             BIT(1),     /* Lang Env supports reusable enclaves*/
    3 Reserved          BIT(1),     /* Reserved for CICS                  */
    3 LE_TRAN           BIT(1),     /* Lang Env indicates the transaction */
                                    /* dump service routines required are */
                                    /* available.                         */
    3 Reserved          BIT(117),   /* Reserved for future use            */
```

Figure 89. Structure of Interface Flags Field (Part 2 of 2)

langavl **(output)**

A fullword binary value to contain bit settings for the languages that provide a Language Environment-CICS member event handler (CEEEVnnn) capable of handling both the existing (non-Language Environment-enabled) application programs as well as the new (Language Environment-enabled) application programs running in CICS environment. CICS uses this information to decide whether to interface with Language Environment or continue to interface with the languages directly as before (prior to Language Environment). Bit definitions are:

```
Value of Bit0 (far left bit):
  1=Assembler member event handler (CEEEV015) is available
  0=Assembler member event handler (CEEEV015) is not available
Value of Bit1
  1=C or C++  member event handler (CEEEV003) is available
  0=C or C++  member event handler (CEEEV003) is not available
Value of Bit2
  1=COBOL   member event handler (CEEEV005) is available
  0=COBOL   member event handler (CEEEV005) is not available
Value of Bit3
  1=PL/I   member event handler (CEEEV010) is available
  0=PL/I   member event handler (CEEEV010) is not available
```

Usage Notes:

1. Bit3 (fourth bit) of the CICS_FLAGS parameter on partition_initialization will be set by CICS to indicate that CICS supports reusable run unit work areas (RRWA). This bit maps to an existing structure in the RCB. It will be reserved

and called 'CEERCB_CICS_RRWA_OK'. This bit can then be tested by Language Environment or its members to determine if this environment is supported.

2. Bit5 (sixth bit) of CICS_FLAGS parameter on partition_initialization will be set by CICS to indicate that CICS will provide the address of the load module name in *pgminfo1*.

   If the CICS support to provide the program name is not available, the address of the program name passed to the storage tuning user exit in the CEESTX CICS specific control block will be zero.
3. LE_FLAGS bit 3 will be set by CEECPINI (Partition initialization) to signify that Language Environment supports the interface changes including the reusable run unit work area.
4. If CICS is running at a higher level than Language Environment, then Language Environment will run and CICS will descend to match the Language Environment level.
5. If Language Environment detects CICS is running at a lower level than Language Environment, then Language Environment will deactivate all higher level functions in order to match the CICS level.
6. Bit6 (TUNE_SUP) of the CICS_FLAGS parameter on partition_initialization will be set by CICS to indicate that CICS has the support for automatic storage tuning. When this bit is on:
   - The value in Bit7 (LE_AUTODST) will indicate the setting for system initialization parameter AUTODST.
   - CICS provides a pointer to a 96 byte area in `pgminfo2`.
   - CICS provides support for the new bit in `pgminfo2` that indicates to CICS to update its sizes for RUWA and the 96 byte area at rununit termination.

Partition Termination (Language Environment Disablement)

Disablement of Language Environment is performed by Partition Termination Call to the Language Environment-CICS interface module during CICS termination.

CICS calls the Language Environment-CICS interface module (CEECCICS) for partition termination during the normal system termination. This occurs after PLTSD (Program List Table of programs to run during Shut-Down) processing completes.

If partition termination fails, CICS outputs a message quoting the reason code returned by Language Environment. CICS does not issue the Partition Termination Call during the following situations:

- Immediate System Termination (CEMT PERFORM SHUTDOWN IMMEDIATE)
- Abnormal System Termination

Member event handlers are called for process termination prior to the Partition Termination Call.

Syntax

Call CEECCICS (11, *rsncode, syseib, preasa, ptoken*) **Retcode** (*rc*)

rsncode **(output)**

A fullword integer in *nnnffrr* format to contain the member language-specific partition termination reason code or one of the following Language Environment reason codes:

11100 Invalid parameter was passed
11110 The library was not released
11120 Storage was not freed
11130 Language-specific partition termination was not done

syseib
The system EXEC interface block, as defined by CICS. Its address is above 16M.

preasa
A preallocated save area supplied by CICS. The size of this save area is 248 (DFHEISTG length) bytes.

ptoken
A doubleword value containing the Language Environment partition token passed back to CICS at partition initialization.

Establish Ownership Type Call

When CICS loads any program, the CICS Program Control Program calls Language Environment to determine if Language Environment is managing the program. It then looks up the program name in its Processing Program Table (DFHPPT) to get its language type, determines whether it is in storage, and if it is, where its entry point is. If the program is not in storage, it is loaded into storage and its entry point address is placed in its PPT entry.

If the program is, for example, a COBOL program, CICS needs to know which language library (OS/VS COBOL, VS COBOL II, or Language Environment) to interface with. For Language Environment-enabled programs, the PPT's LANG parameter is not required (or LANG=NOTAPPLIC). Language Environment-enabled programs are identifiable through the Language Environment eye catcher at their entry point and through the information provided in Program Prolog Areas PPA1 and PPA2. For more information on requirements of being a Language Environment-enabled program, see "Routine Layout" on page 4.

CICS discovers the language type and the run unit work area length (if desired to be preallocated) with "Establish Ownership Type Call" to the Language Environment-CICS interface routine the first time it loads a program. This call is made after partition initialization and prior to Thread and/or run unit initialization call and is subject to certain rules:

- The call for programs defined as LANG=NOTAPPLIC is issued if the Language Environment-CICS interface is enabled. The routine CEECCICS must have been loaded by CICS and Language Environment partition initialization must have been completed successfully by Language Environment.
- The call for programs defined as LANG=C or COBOL or PL/I is issued if the Language Environment-CICS interface is enabled for those languages.

Syntax

Call CEECCICS (50, *rsncode, syseib, preasa, ptoken, reserved1*, *reserved2, pgminfo1, pgminfo2*) **Retcode** (*rc*)

rsncode **(output)**
A fullword integer in *nnnffrr* format to contain the member language-specific establish ownership reason code or one of the following Language Environment reason codes:
15000 Invalid parameter was passed

15020 Program ownership type and/or run unit work area length was not established
15030 Language-specific establish ownership failed
15060 The application provided a program object that cannot be supported with the current level of CICS.

syseib
The system EXEC interface block, as defined by CICS. Its address is above 16M.

preasa
A preallocated save area (above 16M) supplied by CICS. The size of this save area is 248 (DFHEISTG length) bytes.

ptoken
A doubleword value containing the Language Environment partition token passed back to CICS at partition initialization.

reserved1
A reserved argument; it is neither referred to, nor set by, Language Environment.

reserved2
A reserved argument; it is neither referred to, nor set by, Language Environment.

pgminfo1
The following structure of information supplied by CICS to Language Environment as shown in Figure 90 on page 413.

```
DCL 1 PGMINFO1,                        /* Pgm Info from CICS to       */
                                       /* Language Environment        */
      2 STRUC_LENGTH   FIXED BIN(31),  /* pgminfo1 structure length   */
      2 RULANG,                        /* Run unit's "main" program   */
                                       /* language defined in PPT as: */
        3 ASSEMBLER    BIT(1),         /* LANG=ASSEMBLER              */
        3 C370         BIT(1),         /* LANG=C/370                  */
        3 COBOL        BIT(1),         /* LANG=COBOL II               */
        3 PLI          BIT(1),         /* LANG=PL/I                   */
        3 RPG          BIT(1),         /* LANG=RPG                    */
        3 NOTAPPLIC    BIT(1),         /* LANG=NOTAPPLIC or blank     */
        3 *            BIT(2),         /* Reserved                    */
        3 *            BIT(16),        /* Reserved                    */
      2 FLAGS,                         /* Additional Flags            */
        3 OPEN_PROGRAM BIT(1),         /* 1 = Program runs only on an */
                                       /*     OTE TCB and can use     */
                                       /*     Open C functions        */
                                       /* 0 = Program may run on OTE  */
                                       /*     or QR TCB               */
        3 REUSE_ENCLAVE BIT(1),        /* 1 = Program defined as a    */
                                       /*     reusable enclave        */
                                       /* 0 = Program is not defined  */
                                       /*     as a reusable enclave   */
        3 *            BIT(6),         /* Reserved                    */
      2 RULOADMOD,
        3 RULOADA      POINTER,        /* Run unit load module addr   */
        3 RULOADL      FIXED BIN(31),  /* Run unit load module length */
      2 ENTRY_STATIC,
        3 RUENTRY      POINTER,        /* Run unit Entry Point Addr   */
        3 RUSTATIC     POINTER,        /* Run unit Static Address     */
      2 PREARWA31      POINTER,        /* Pre-allocated run-unit work */
                                       /* area above 16 meg           */
      2 PREARWA24      POINTER,        /* Pre-allocated run-unit work */
                                       /* area below 16 meg           */
      2 APAL           POINTER,        /* Application program arg list*/
      2 RTOPTS         POINTER,        /* Run-time options string as  */
                                       /* specified during debugging  */
                                       /* using CICS EDF and INSPECT  */
      2 RTOPTS1        FIXED           /* Run-time opts string length */
      2 LDMDNAME@      POINTER,        /* Address of the load module  */
                                       /* name (only available if     */
                                       /* PARTINIT_LDMDNAME is ON)    */
```

Figure 90. Structure of Information Supplied to CICS by Language Environment for PGMINFO1

struc_length
A fullword integer value containing the *pgminfo1* structure length.

rulang
A fullword binary value indicating the language type of the run unit (main program) as defined in PPT. In PPT, LANG=NOTAPPLIC can be used for Language Environment-enabled application programs. For bit definitions, see Figure 90.

ruloada
A fullword value containing the load module address of the run unit. This address in conjunction with the entry point address is used to access run unit prolog information (PPA1, PPA2) when necessary.

ruloadl
A fullword value containing the load module length of the run unit. This value is used to validate the addresses accessed through the run unit prolog information (PPA1, PPA2) when necessary.

ruentry
A fullword value containing the entry point address of the run unit. This address is given control at run unit begin invocation call for Language Environment-enabled programs. The run unit entry is established at link-edit time. The high-order bit indicates the AMODE of the run unit.

rustatic
A fullword. This is passed in R0 to the main program at run unit begin invocation call.

ruload_namea
A fullword address that points to the load module name. The load module name is 8-bytes long and is padded with blanks.

pgminfo2 **(output)**
The structure of information supplied to CICS by Language Environment, as shown in Figure 91 on page 415.

```
DCL 1 PGMINFO2,                        /* Pgm Info from Lang Env to   */
                                       /*    CICS                     */
      2 STRUC_LENGTH     FIXED BIN(31), /* pgminfo2 structure length   */
      2 RWALEN_31        FIXED BIN(31), /* Run unit workarea length    */
                                       /* above 16 megabyte           */
      2 RWALEN_24        FIXED BIN(31), /* Run unit workarea length    */
                                       /* below 16 megabyte           */
      2 PGMTYPE          BIT(32),       /* Program Type of the "Main"  */
        3 CEEENABLE      BIT(2),        /* Lang Env Enablement         */
                                       /* 11 - Fully Lang Env-        */
                                       /*      enabled                */
                                       /*      programs (w/ PPAs)     */
                                       /* 10 - Partially Lang Env-    */
                                       /*      enabled programs (old  */
                                       /*      or new w/o PPAs)       */
                                       /* 01 - Not Lang Env-enabled   */
                                       /*      programs               */
                                       /* 00 - Don't know: programs   */
                                       /*      which can't be identi- */
                                       /*      fied. eg. OS/VS COBOL  */
        3 MIXED          BIT(1),        /* Mixed or Single language    */
                                       /* load module                 */
                                       /*  1 - Mixed                  */
                                       /*  0 - Single                 */
        3 COMPAT         BIT(1),        /* Compatibility Requirement   */
                                       /*  1 - Required               */
                                       /*  0 - Not Required           */
        3 EXECUTE        BIT(1),        /* Program Execution           */
                                       /*  1 - Executable             */
                                       /*  0 - Not Executable         */
        3 ASSEMBLER      BIT(1),        /* "Main" Program Language     */
                                       /*  1 - Assembler              */
                                       /*  0 - Not Assembler          */
        3 C370           BIT(1),        /* "Main" Program Language     */
                                       /*  1 - C/370                  */
                                       /*  0 - Not C/370              */
        3 COBOLII        BIT(1),        /* "Main" Program Language     */
                                       /*  1 - VS COBOL II            */
                                       /*  0 - Not VS COBOL II        */
        3 OSCOBOL        BIT(1),        /* "Main" Program Language     */
                                       /*  1 - OS/VS COBOL            */
                                       /*  0 - Not OS/VS COBOL        */
        3 PLI            BIT(1),        /* "Main" Program Language     */
                                       /*  1 - OS PL/I                */
                                       /*  0 - Not OS PL/I            */
        3 UPDATE_PGMINFO2 BIT(1),       /* Output parameter on rununit */
                                       /* termination call. ON= tells */
                                       /* CICS to update its control  */
                                       /* blocks with the following   */
                                       /* fields in PGMINFO2:         */
                                       /* - RWALEN_31                 */
                                       /* - RWA;EM_24                 */
                                       /* - STG_TUNE_AREA             */
        3 *              BIT(21),       /* Reserved                    */
```

Figure 91. Structure of Information Supplied to CICS by Language Environment for PGMINFO2 (Part 1 of 2)

```
  2 * CHAR(4),                      /* additional CEL defined info */
    3 EPTYPE         FIXED(8),      /* type of module entry point: */
                                    /* 0 - old                     */
                                    /* 1 - ppa1                    */
                                    /* 2 - ceestart                */
                                    /* 3 - ppa1 w v1r2 ceestart    */
                                    /* 4 - v1r2 ceestart           */
    3 NEEDOPTP       BIT(1),        /* Member language of main     */
                                    /* needs to be called for      */
                                    /* option processing event     */
    3 PGM_ALL31_ON   BIT(1),        /* 31 bit                      */
    3 STX_LDMOD_ELIG BIT(1),        /* Load module is eligible for */
                                    /* the storage tuning user     */
                                    /* exit.                       */
                                    /* ON = enable the storage     */
                                    /*   tuning user exit for this */
                                    /*   load module.              */
                                    /* OFF = disable the storage   */
                                    /*   tuning user exit for this */
                                    /*   load module.              */
    3 *              BIT(13),       /*                             */
    3 MEMID          FIXED(8),      /* Member id of the language   */
                                    /* of the "main" program       */
  2 *                CHAR(8)        /* Est Ownership return fields */
    3 dopt_ptr       POINTER,       /* pointer to default OCB      */
    3 uopt_ptr       POINTER,       /* pointer to user OCB         */
  2 AUTOTUNE_AREA@   POINTER,       /* pointer to a 96 byte area   */
                                    /* for Lang Env to remember    */
                                    /* storage tuning values.      */
```

Figure 91. Structure of Information Supplied to CICS by Language Environment for PGMINFO2 (Part 2 of 2)

struc_length
A fullword integer value that contains the *pgminfo2* structure length.

rwalen_31 **(output)**
A fullword value to contain the above 16M run unit work area length. This work area is preallocated by CICS and passed to Language Environment-CICS interface routine at run unit initialization call. The run unit work area length is the sum of the run unit work areas required by Language Environment and member languages.

rwalen_24 **(output)**
A fullword value to contain the below 16M run unit work area length. This work area is preallocated by CICS and passed to Language Environment-CICS interface routine at run unit initialization call. The run unit work area length is the sum of the run unit work areas required by Language Environment and member languages.

pgmtype **(output)**
A fullword value to contain information regarding the main program of the run unit:

- If the main program is Language Environment enablement.
- If the run unit is a single or mixed language load module.
- If compatibility is required at invocation.

memid **(output)**
A fullword value to contain the member ID of the language of the main program of the run unit. CICS can provide this information back to the system programmer if desired.

Thread Initialization

Processing a transaction can involve a single run unit or several run units in the same or different languages. The sequence of currently active run units for a single transaction is called a CICS thread.

Thread initialization is performed when the first transaction run unit is encountered in a thread, and CICS calls the Language Environment-CICS interface module to request it. This request is made through the Thread Initialization Call. If the thread cannot be initialized then CICS abends the task.

Syntax

Call CEECCICS (20, *rsncode, syseib, preasa, ptoken, ttoken, preatwa*, *pgminfo1*, *pgminfo2*, *statusflags*) **Retcode** (*rc*)

rsncode **(output)**
A fullword integer in *nnnffrr* format to contain the member language-specific thread initialization reason code or one of the following Language Environment reason codes:
12000 Invalid parameter was passed
12020 Thread work area was not preallocated
12030 Language-specific thread initialization was not done

syseib
The system EXEC interface block, as defined by CICS. Its address is above 16M.

preasa
A preallocated save area supplied by CICS. The size of this save area is 248 (DFHEISTG length) bytes. It can be used for issuing CICS commands if necessary.

ptoken
A doubleword value containing the Language Environment partition token passed back to CICS at partition initialization.

ttoken **(output)**
A doubleword value to contain the Language Environment thread token.

preatwa
The address of the preallocated thread work area. The length of this work area was passed to CICS at Language Environment partition initialization.

pgminfo1
The same structure of information supplied by CICS to Language Environment in an establish ownership type call; see Figure 90 on page 413.

pgminfo2
The same structure of information supplied by CICS to Language Environment in an establish ownership type call; see Figure 91 on page 415.

statusflags
The same structure of information supplied by CICS to Language Environment as shown in Figure 92 on page 418.

```
1 CEECICS_STATUS_FLAGS     BIT(32) BASED(CEECICS_ARG11PTR),
  3 CEECICS_CICS_AP_TRACE,          /* State of AP trace           */
    5 CEECICS_TRACE_LEVEL1 BIT(1),  /* Level 1 trace is requested  */
    5 CEECICS_TRACE_LEVEL2 BIT(1),  /* Level 2 trace is requested  */
```

Figure 92. Structure of Information Supplied to CICS by Language Environment for STATUSFLAGS

Usage Note: If the initial program in a transaction is a reusable enclave, then the CICS thread (Language Environment process) is marked as a Language Environment/CICS reusable process.

Thread Termination

Thread termination occurs when a transaction is completed or is being terminated. This is done through the thread termination call from CICS to the Language Environment-CICS interface module. All thread level clean-up, such as freeing the acquired storage, occurs at this stage. Language Environment resets the thread token back to 0 at completion of the thread termination. The language-specific thread termination also occurs at this stage.

Note: CICS issues the thread termination call if, and only if, a nonzero thread token has been returned to CICS by Language Environment at thread initialization. The same applies to the member languages.

Syntax

Call CEECCICS (21, *rsncode*, *syseib*, *preasa*, *ptoken*, *ttoken*) **Retcode** (*rc*)

rsncode **(output)**
A fullword integer in *nnnffrr* format to contain the member language-specific thread termination reason code or one of the following Language Environment reason codes:
12100 Invalid parameter was passed
12110 Active run unit(s) were detected
12130 Language-specific thread termination was not done

syseib
The system EXEC interface block, as defined by CICS. Its address is above 16M.

preasa
A preallocated save area supplied by CICS. The size of this save area is 248 bytes. It can be used for issuing CICS commands, such as FREEMAIN, if necessary.

ptoken
A doubleword value containing the Language Environment partition token passed back to CICS at partition initialization.

ttoken **(input/output)**
A doubleword value containing the Language Environment thread token passed back to CICS at thread initialization.

Usage Notes:

1. Language Environment processing assumes that there will never be a scenario needed where a process might 'switch' to non-reusable after being initialized reusable.

Run Unit (Program) Initialization

The next stage prior to run unit (program) invocation is the run unit initialization. This is requested by CICS through the run unit initialization call after loading the run unit (Language Environment-enabled PPT module) and prior to control being passed to it. Run unit load point, entry point, parameter list as well as the Language Environment thread token are provided in this call. If the run unit can not be initialized, CICS abends the task. Run unit initialization occurs at:

- CICS task attachment
- EXEC CICS LINK or EXEC CICS XCTL commands

Syntax

Call CEECCICS (30, *rsncode*, *syseib*, *preasa*, *ptoken*, *ttoken*, *rtoken*, *pgminfo1*, *pgminfo2*, *ioinfo*, *runinfo*, *retoken*) **Retcode** (*rc*)

rsncode **(output)**
A fullword integer in *nnnffrr* format to contain one of the following Language Environment reason codes:

13000 Invalid parameter was passed
13010 No run unit work area was passed
13040 No application program argument list was passed
13200 Invalid parameter was passed when the direct invoke bit is set
13210 No run unit work area was passed when the direct invoke bit is set
13230 Language-specific run unit invocation failed when the direct invoke bit is set
13240 No application program argument list was passed when the direct invoke bit is set

syseib
The system EXEC interface block, as defined by CICS. This control block contains information about running the CICS commands issued by Language Environment. There is no need to save and restore the user EIB around the commands issued by Language Environment. The system EIB address is above 16M. For the information contained in the EIB, see *CICS Application Programming Reference*.

Note: The user EIB which is different than the system EIB, is passed to the application program in the application program argument list.

preasa
A preallocated save area passed to Language Environment by CICS. The size of this save area is 248 bytes.

ptoken
A doubleword value containing the Language Environment partition token established at partition initialization.

ttoken
A doubleword value containing the Language Environment thread token established at thread initialization.

rtoken **(output)**
A doubleword value to contain the Language Environment run unit token.

pgminfo1
The structure of information supplied by CICS to Language Environment is shown in Figure 93 on page 420.

```
DCL 1 PGMINFO1,                        /* Data from CICS to Lang Env  */
      2 STRUC_LENGTH   FIXED BIN(31),  /* pgminfo1 structure length   */
      2 RULANG,                        /* Run unit's "main" program
                                          language defined in PPT as: */
        3 ASSEMBLER    BIT(1),         /* LANG=ASSEMBLER              */
        3 C370         BIT(1),         /* LANG=C/370                  */
        3 COBOL        BIT(1),         /* LANG=COBOL II               */
        3 PLI          BIT(1),         /* LANG=PL/I                   */
        3 RPG          BIT(1),         /* LANG=RPG                    */
        3 NOTAPPLIC    BIT(1),         /* LANG=NOTAPPLIC or blank     */
        3 *            BIT(2),         /* Reserved                    */
      2 FLAGS,                         /* Additional Flags            */
        3 OPEN_PROGRAM BIT(1),         /* 1 = Program runs only on an
                                              OTE TCB and can use
                                              Open C functions
                                          0 = Program may run on OTE
                                              or QR TCB               */
        3 *            BIT(7),         /* Reserved                    */
      2 RULOADMOD,
        3 RULOADA      POINTER,        /* Run unit load module addr   */
        3 RULOADL      FIXED BIN(31),  /* Run unit load module length */
      2 ENTRY_STATIC,
        3 RUENTRY      POINTER,        /* Run unit Entry Point Addr   */
        3 RUSTATIC     POINTER,        /* Run unit Static Address     */
      2 PREARWA_31     POINTER,        /* Preallocated run unit work- */
                                       /* area above 16Meg            */
      2 PREARWA_24     POINTER,        /* Preallocated run unit work- */
                                       /* area below 16Meg            */
      2 APAL           POINTER,        /* Application Pgm Arg List    */
      2 RTOPTS         POINTER,        /* Run-time options string     */
                                       /* specified during debugging  */
      2 RTOPTSL        FIXED BIN(31),  /* Run-time opts string length */
      2 RULOAD_NAMEA   POINTER,        /* Address of the run unit     */
                                       /* load module name            */
```

Figure 93. Structure of Information Supplied to Language Environment by CICS

struc_length
A fullword value containing the *pgminfo1* structure length.

rulang
A fullword binary value indicating the language type of the run unit (main program) as defined in PPT. In PPT, LANG=NOTAPPLIC can be used for Language Environment-enabled application programs. For bit definitions, see above.

ruloada
A fullword value containing the load address of the run unit. This address in conjunction with the entry point address is used to access run unit prolog information (PPA1, PPA2) when necessary.

ruloadl
A fullword value containing the load module length of the run unit. This value is used to validate the addresses accessed through the run unit prolog information (PPA1, PPA2) when necessary.

ruentry
A fullword value containing the entry point address of the run unit. This address is given control at the run unit begin invocation call for Language Environment-enabled programs. The run unit entry is established at link-edit time. The high-order bit indicates the AMODE of the run unit.

rustatic
A full word passed in R0 to the main program at the run unit begin invocation call.

prearwa_31
A fullword value containing the address of the preallocated run unit work area above 16M. The length of this preallocated work area was passed back to CICS at establish ownership type call prior to run unit initialization call. This work area can be initialized to contain CAA, HEAP, ISA and other Language Environment control blocks.

prearwa_24
A fullword value containing the address of the preallocated run unit work area below 16M. The length of this preallocated work area was passed back to CICS at establish ownership type call prior to run unit initialization call. This work area can be initialized to contain control blocks that have to be below 16M.

apal
A fullword value containing the address of the application program argument list. This argument list that contains the address of the user EIB and the address of a COMMAREA is described in detail later in this section.

rtopts
A fullword value containing the address of the run-time options string passed to CICS during debugging with CICS EXEC Debugging Facility (EDF). For example, CEDF terminal-ID,ON,'run-time options'.

rtoptsl
A fullword value containing the length of the run-time options string.

Note: When EDF is invoked in the following fashion:

```
CEDF term,ON,INSPECT
```

a special character string is passed to Language Environment during run unit initialization in the *rtopts* parameter. The following string is passed:

```
TEST,TERM=xxxx
```

where `xxxx` is the terminal identifier for the terminal where debugging information should be communicated. (This can either be information for a 3270-type terminal or communication to/from a workstation.)

Language Environment detects this string, and internally initializes as if the options string `TEST` was passed. Also, Language Environment passes the terminal identifier to Debug Tool as a new, fifth parameter of the external entries debugger event.

ruload_namea
A fullword address that points to the load module name. The load module name is 8-bytes long and is padded with blanks.

pgminfo2
The structure of information described at establish ownership type call.

ioinfo **(output)**
A structure that contains the standard input/output and error file information (transient data queue names or spool file classes). The structure declaration is in Figure 94 on page 422.

```
DCL 1 IOINFO,                          /* I/O Information Structure   */
                                       /*                             */
      2 STD_IN,                        /* Standard input file         */
        3 QORS_IN      CHAR(1),        /* - either                    */
                                       /*   'Q', transient data queue */
                                       /*   'S', spoolfile            */
        3 TDQN_IN      CHAR(4),        /* - queue name                */
        3 SPOC_IN      CHAR(1),        /* - spool class               */
                                       /*                             */
      2 STD_OUT,                       /* Standard output file        */
        3 QORS_OUT     CHAR(1),        /* - either                    */
                                       /*   'Q', transient data queue */
                                       /*   'S', spoolfile            */
        3 TDQN_OUT     CHAR(4),        /* - queue name                */
        3 SPOC_OUT     CHAR(1),        /* - spool class               */
                                       /*                             */
      2 STD_ERR,                       /* Standard error file         */
        3 QORS_ERR     CHAR(1),        /* - either                    */
                                       /*   'Q', transient data queue */
                                       /*   'S', spoolfile            */
        3 TDQN_ERR     CHAR(4),        /* - queue name                */
        3 SPOC_ERR     CHAR(1),        /* - spool class               */
```

Figure 94. Structure of Standard I/O Information provided to Language Environment by CICS

runinfo **(input)**
Address of a fullword containing information about how the run unit should be initialized and whether it should be immediately invoked after initialization. See Figure 95.

```
DCL 1 RUNINFO      BIT(32),            /* Run Information             */
      2 INVOKE     BIT(1),             /* Call Lan Env Begin Invocation*/
                                       /* after initialization?       */
                                       /*  0 - Return after init      */
                                       /*  1 - Call Begin Invocation  */
      2 RWA_REUSE  BIT(1),             /* RWA candidate for reuse?    */
                                       /*  0 - No                     */
                                       /*  1 - Yes                    */
      2 *          BIT(30),            /* Reserved                    */
```

Figure 95. Run Information Supplied to Language Environment by CICS

retoken **(input)**
A doubleword value to contain the run-unit token of the most recently invoked JVM in the chain (or zero if none exists). The presence of a n address tells Language Environment there is a JVM reusable enclave as a parent.

Usage Notes:

1. The run unit initialization process operates as follows, resulting in shortened path lengths and improved performance:
   a. The INVOKE bit is tested and if on, run unit initialization calls run unit begin invocation directly using the registers/parmlist passed by CICS for the run unit initialization call.
   b. The RWA_REUSE bit is tested in run unit initialization and a new bit, CEEEDB_CICS_RUNREUSE, is turned on to indicate that the run work area may be reused.

Run Unit (Program) Termination

After the Language Environment-CICS interface routine returns from the run unit end invocation call to CICS, CICS can the drive Language Environment-CICS interface routine with the run unit termination call. Run unit termination call can occur as frequent as the run unit end invocation call or it might only occur when CICS is under stress.

Syntax

Call CEECCICS (31, *rsncode*, *syseib*, *preasa*, *ptoken*, *ttoken*, *rtoken*, *terminfo*)
Retcode (*rc*)

rsncode **(output)**
A fullword integer that contains one of the following Language Environment reason codes:
13100 Invalid parameter was passed
13110 Wrong thread token was passed
13140 No PTB was passed

syseib
The system EXEC interface block, as defined by CICS for use by Language Environment and language-specific interface routines. The system EIB address is above 16M. For the information contained in the EIB, see *CICS Application Programming Reference*.

preasa
A fullword value containing the preallocated save area address to be used by Language Environment to issue the last EXEC CICS FREEMAIN command. The size of this save area is 248 bytes.

ptoken
A doubleword value containing the Language Environment partition token established at partition initialization.

ttoken
A doubleword value containing the Language Environment thread token established at thread initialization.

rtoken
A doubleword value containing the Language Environment run unit token established at run unit initialization.

terminfo
A 32 bit structure that communicates termination information from CICS to Language Environment. See Figure 96.

```
DCL 1 TERMINFO     BIT(32),            /* CICS termination information */
      2 TCB_SWITCH BIT(1),             /* Indicates TCB has been       */
                                       /* switched and clean-up should */
                                       /* be bypassed                  */
                                       /* For OTE and reusable enclaves*/
                                       /* CICS may or may not call Lang*/
                                       /* Env for the proper TCB that  */
                                       /* original task (TCB) was      */
                                       /* dubbed on                    */
```

Figure 96. Termination Information Supplied from CICS to Language Environment

Run Unit (Program) Begin Invocation

After a successful Language Environment run unit initialization, CICS calls the Language Environment-CICS interface routine for the run unit begin invocation call. Language Environment-CICS interface routine then calls the main Language Environment-enabled program at its entry point established at link-edit time. If the program is not a Language Environment-enabled program, the language-specific interface routine is called to do the run unit invocation instead. A single link-edited load module under CICS can have only one functional entry point which is established at link-edit time. The application program argument list is passed to the program.

Before control is transferred to the main program, the initialization assembler user exit and the HLL initialization user exit is called and spool files if appropriate is opened. These spool files are closed at run unit end invocation.

If the run unit abends or terminates with a CICS request (EXEC CICS ABEND, EXEC CICS XCTL, or EXEC CICS RETURN), control is not returned to CICS from the run unit begin invocation. Then run unit end invocation call is made by CICS.

Syntax

Call CEECCICS (32, *rsncode*, *syseib*, *preasa*, *ptoken*, *ttoken*, *rtoken*, *pgminfo1*, *pgminfo2*, *ioinfo*) **Retcode** (*rc*)

rsncode **(output)**
A fullword integer in *nnnffrr* format to contain the member language-specific run unit invocation reason code or one of the following Language Environment reason codes:
13200 Invalid parameter was passed
13210 No run unit work area was passed
13230 Language-specific run unit invocation failed
13240 No application program argument list was passed

syseib
The system EXEC interface block, as defined by CICS. This control block contains information about running the CICS commands issued by Language Environment. There is no need to save and restore the user EIB around the commands issued by Language Environment. The system EIB address is above 16M. For the information contained in the EIB, see *CICS Application Programming Reference*.

Note: The user EIB which is different than the system EIB, is passed to the application program in the application program argument list.

preasa
A preallocated save area passed to Language Environment by CICS. The size of this save area is 248 bytes.

ptoken
A doubleword value containing the Language Environment partition token established at partition initialization.

ttoken
A doubleword value containing the Language Environment thread token established at thread initialization.

rtoken
A doubleword value containing the Language Environment run unit token established at run unit initialization.

pgminfo1
The structure of information supplied by CICS to Language Environment as shown in Figure 93 on page 420; this is the same structure as in the run unit initialization call.

pgminfo2
The structure of information supplied by CICS to Language Environment as shown in Figure 91 on page 415; this is the same structure as in the run unit initialization call.

ioinfo
A structure that contains the standard input/output and error file information (transient data queue names or spool file classes). The structure declaration follows:

```
DCL 1 IOINFO,                 /* I/O Information Structure       */

      2 STD_IN,               /* Standard input file             */
        3 QORS_IN  CHAR(1),   /* - either                        */
                              /*   'Q', transient data queue, or */
                              /*   'S', spoolfile                */
        3 TDQN_IN  CHAR(4),   /* - queue name                    */
        3 SPOC_IN  CHAR(1),   /* - spool class                   */

      2 STD_OUT,              /* Standard output file            */
        3 QORS_OUT CHAR(1),   /* - either                        */
                              /*   'Q', transient data queue, or */
                              /*   'S', spoolfile                */
        3 TDQN_OUT CHAR(4),   /* - queue name                    */
        3 SPOC_OUT CHAR(1),   /* - spool class                   */

      2 STD_ERR,              /* Standard error file             */
        3 QORS_ERR CHAR(1),   /* - either                        */
                              /*   'Q', transient data queue, or */
                              /*   'S', spoolfile                */
        3 TDQN_ERR CHAR(4),   /* - queue name                    */
        3 SPOC_ERR CHAR(1),   /* - spool class                   */
```

Figure 97. Structure of Information Supplied to Language Environment by CICS

std_in
A sub-structure that contains information regarding the standard input file. CICS acquires this information from the user through a user exit prior to the run unit begin invocation call to Language Environment.

qors_in
A character (’Q’ or ’S’) flag to indicate whether the file is a transient data queue or a spoolfile.

tdqn_in
A 4-character standard input transient data queue name when *qors_in* flag is set to ’Q’.

spoc_in
A character identifying the standard input spool file class when *qors_in* flag is set to ’S’.

std_out
A sub-structure that contains information regarding the standard output file. CICS acquires this information from the user through a user exit prior to the run unit begin invocation call to Language Environment.

qors_out
A character ('Q' or 'S') flag to indicate whether the file is a transient data queue or a spoolfile.

tdqn_out
A 4-character standard output transient data queue name when *qors_in* flag is set to 'Q'.

spoc_out
A character identifying the standard output spool file class when *qors_in* flag is set to 'S'.

std_err
A sub-structure that contains information regarding the standard error file. CICS acquires this information from the user through a user exit prior to the run unit begin invocation call to Language Environment.

qors_err
A character ('Q' or 'S') flag to indicate whether the file is a transient data queue or a spoolfile.

tdqn_err
A 4-character standard error transient data queue name when *qors_in* flag is set to 'Q'.

spoc_err
A character identifying the standard error spool file class when *qors_in* flag is set to 'S'.

The Language Environment Initialization routine (CEEINT), which is usually called from the application program or a language library (COBOL for OS/390 and VM and VM's bootstrap library routine IGZCBS0) after the invocation of the application program, checks the Language Environment anchor first (with CEEARLU). Since under CICS, the Language Environment environment is initialized prior to the run unit (program) invocation at partition, thread and run unit initialization, no further action is required. Control is returned to the caller of the CEEINT with an appropriate return code indicating that the Language Environment environment is up. The program continues to run. For a detail information regarding the CEEINT and the possible return codes, see "CEEINT Interface" on page 145.

Run Unit (Program) End Invocation

The Language Environment-CICS interface routine is called for run unit end invocation as a result of a normal return (with language terminating statements) from the run unit begin invocation or as a result of a CICS terminating command from the application program or Language Environment.

If the program undergoes normal termination through the language statements such as COBOL's STOP RUN, PL/I's END or RETURN or SIGNAL FINISH, Language Environment termination imminent condition is raised by the program load module. After this condition is handled by the Language Environment exception handler, control is returned to the Language Environment run unit begin invocation routine with the return address (R14) originally stored in the first save area of the program work area. Language Environment run unit begin invocation routine then returns to

CICS. Next, the Language Environment-CICS interface routine expects a call for run unit end invocation to do the invocation-based clean ups.

If the program undergoes termination (normal or abnormal) as a result of running the EXEC CICS XCTL, RETURN, or SEND PAGE RELEASE commands or from an abend (program check or EXEC CICS ABEND command), the Language Environment-CICS interface module is driven by CICS. The run unit end invocation call receives the run unit token to identify the Language Environment run unit that is being terminated. A Program Termination Block (PTB, the TERMINFO structure) is also provided by CICS to describe the termination situation (normal or abnormal). This call notifies Language Environment that one of the resources for which it is responsible is terminating due to some reason that might not yet be known.

Restrictions on the Language Environment run unit end invocation routine are:
- It must always return to the address in R14
- It must not issue EXEC CICS ABEND (it can issue any other EXEC CICS command that does not raise a subsequent error)

Syntax

Call CEECCICS (33, *rsncode*, *syseib*, *preasa*, *ptoken*, *ttoken*, *rtoken*, *pgminfo1*, *pgminfo2*, *ptb*) **Retcode** (*rc*)

rsncode **(output)**
A fullword integer that contains one of the following Language Environment reason codes:
13300 Invalid parameter was passed
13310 Wrong thread token was passed
13320 No PTB was passed

syseib
The system EXEC interface block, as defined by CICS for use by Language Environment and language-specific interface routines. The system EIB address is above 16M. For the information contained in the EIB, see *CICS Application Programming Reference*.

preasa
A fullword value containing the preallocated save area address to be used by Language Environment to issue the last EXEC CICS FREEMAIN command. The size of this save area is 248 bytes.

ptoken
A doubleword value containing the Language Environment partition token established at partition initialization.

ttoken
A doubleword value containing the Language Environment thread token established at thread initialization.

rtoken
A doubleword value containing the Language Environment run unit token established at run unit initialization.

pgminfo1
The structure of information supplied by CICS to Language Environment, as shown in Figure 93 on page 420; this is the same structure as in the run unit begin call.

pgminfo2
The structure of information supplied by CICS to Language Environment, as shown in Figure 91 on page 415; this is the same structure as in the run unit begin call.

ptb
A fullword value containing the address of the Program Termination Block, the TERMINFO structure. This structure contains information regarding the normal and abnormal termination of a run unit. For abnormal termination, information such as PSW, general purpose registers, floating-point registers and access registers at the time of interrupt are provided. A retry mechanism is also provided. A declaration of the PTB is shown in Figure 98.

```
 DCL 1 TERMINFO,              /* Program Termination Block      */
       2 TERMCODE BIT(32),    /* Termination Code - see below   */
       2 ABCODE   CHAR(4),    /* CICS Abend Code                */
       2 PCHK,                /* Program Check Information      */
         3 PCHK_PSW CHAR(16), /* - PSW                          */
         3 PCHK_INT,          /* - Interrupt Data               */
           4 PCHK_ILC CHAR(2),/*   - Instruction Length Code    */
           4 PCHK_INC CHAR(2),/*   - Interruption Code          */
           4 PCHK_EAD CHAR(4),/*   - Exception Address          */
         3 PCHK_GR POINTER,   /* - General Registers            */
         3 PCHK_FR POINTER,   /* - floating-point Registers     */

       2 COMMREGS POINTER,    /* Registers at last CICS command */
                              /* (Appl or library)              */
       2 CONTCODE BIT(32),    /* Continuation Code (receiver)   */
       2 RTRY,                /* Retry Information (receiver)   */
         3 RTRY_AD POINTER,   /* - Resume Address               */
         3 RTRY_PM POINTER,   /* - Program Mask                 */
         3 RTRY_GR POINTER,   /* - General Registers            */
         3 RTRY_FR POINTER,   /* - floating-point Registers     */

       2 RTRYADDR POINTER,    /* Retry address (via R15)        */
```

Figure 98. Program Termination Block (PTB) Declaration

termcode
A fullword binary value that contains bit settings to indicate the nature, the cause and the location of the run unit end invocation. Where:

Bit0 (abnorm)
Indicates an abnormal termination. It indicates a normal termination when it is off.

Bit1 (normcel)
Indicates that a normal termination is caused by a CICS command in a Language Environment-enabled run unit. Notice that the caller does not get control back after an EXEC CICS RETURN in a called (link-edited) routine.

Bit2 (normret)
Indicates that a normal termination is caused by a BR 14 from the run unit begin invocation (program has ended with a language statement).

Bit3 (normasm)
Indicates that a normal termination is caused by a CICS command in a called (link-edited) assembler routine.

Bit4 (abnpchk)
Indicates that an abnormal termination is caused by a program check (abend ASRA) in a run unit.

Bit5 (abnother)
Indicates that an abnormal termination is caused by an abend. See the ABCODE.

Bit6 (abnlink)
Indicates that the lower level (linked to) run unit has terminated abnormally.

Bit7 (handleab)
Indicates that a user HANDLE ABEND routine is pending. The Language Environment exception manager should not handle the exception.

Bit8 (input/output) (ptbinuse)
Indicates that this PTB is busy. It is set by Language Environment during the exception handling to avoid recursion. It is turned off by Language Environment when the exception handling completes.

Bit9 (pswcics)
Indicates that the PSW is in the CICS code.

Bit10 (nodump)
Indicates that CICS specified nodump.

Bit11 (cancel)
Indicates that CICS specified cancel.

abcode
A 4-byte character string that identifies the abend code for the abnormal termination.

pchk
A structure that contains the program check information for the abnormal termination.

pchk_psw
An 8-byte field containing the Program Status Word (PSW). Notice that the first word of the PSW contains information such as the condition code and program mask at the time of interrupt and the second word of the PSW contains the address and the AMODE of the instruction after the instruction which caused the program check.

pchk_int
An 8-byte field containing the instruction length code (2 bytes), interruption code (2 bytes) and the exception address (4 bytes).

pchk_gr
A pointer to a 64-byte storage area that contains the general registers (R0-R15) at the time of program check.

pchk_fr
A pointer to a 32-byte storage area that contains the floating-point registers (F0, F2, F4 and F6) at the time of program check.

commregs
A fullword pointer value that contains the address of a storage area containing the general registers (R0-R15) value at the time of the last CICS command. The CICS command could have been issued from an application program or a library routine.

contcode **(output)**
A fullword binary value to contain bit settings to indicate if the run unit end invocation should continue.

Bit0 (term)
Set by Language Environment when normal or abnormal run unit end invocation is considered complete. CICS continues its run unit

end invocation process without calling Language Environment for the run unit end invocation of the same run unit again.

Bit1 (exec)
Set by Language Environment to have CICS continue running the run unit at the retry address (RTRYADDR). CICS assigns RTRYADDR to R15 and sets up all the other registers from the retry structure before resuming the program with a branch on R15. The retry PSW (RTRY_AD) is ignored. Language Environment is recalled for the run unit end invocation later for this run unit.

Note: The termination routine can change a normal termination into an abnormal termination by setting Bit1 of CONTCODE and making the retry point the address of an EXEC CICS ABEND.

Bit2 (rtry)
Set by Language Environment to have CICS continue running the run unit at the retry PSW (RTRY_AD) with the retry registers (RTRY_GR, RTRY_FR and RTRY_AR) set by Language Environment. CICS resumes with a deliberate program check and setting the resume PSW. Language Environment is recalled for the run unit end call for this run unit later.

Bit3 (termotetcb)
CICS must terminate the OTE TCB.

Bit4 (dirty)
CICS must terminate the reusable enclave.

Bit5 (tcb_switched)
CICS sets to ON if a TCB switch has occurred.

rtry **(input/output)**
A pointer structure. The retry pointers address areas into which Language Environment places the retry information when the run unit might be continued at some point in the code. Before calling Language Environment, CICS sets these pointers to address the same areas as are used to hold the registers at program check or abend (PCHK) details. When a retry has been requested, Language Environment will reset these variables to the value in the resume cursor.

rtry-ad
The retry address desired by Language Environment. CICS uses this address to build the retry PSW or load it into R15 (depending upon the CONTCODE) before continuing to run.

rtry_pm
A pointer to a one byte field to contain the retry condition code (Bits 2 and 3) and program mask (Bits 4-7). Bits 0 and 1 are not used.

rtry_gr
A pointer to a 64-byte storage area to contain the retry general registers (R0-R15). CICS sets the general registers value to the retry values before continuing to run.

rtry_fr
A pointer to a 32-byte storage area to contain the retry floating-point registers (F0, F2, F4, and F6). CICS sets the floating-point registers value to the retry values before continuing to run.

rtryaddr
Address of a fullword area to contain a retry address (via R15).

End Invocation

If the program is terminated with the following commands, CICS requests the Language Environment-CICS interface routine through the run unit end invocation call to terminate the run unit invocation:

- EXEC CICS XCTL
- EXEC CICS RETURN
- EXEC CICS SEND PAGE RELEASE

Bit1 or Bit3 (normal termination due to a CICS command) of TERMCODE are ON at this call. The Language Environment-CICS interface routine performs run unit end invocation activities, set Bit0 of CONTCODE to indicate that CICS should continue run unit end invocation without reentering the Language Environment-CICS interface routine and return to CICS. Notice that the termination imminent condition is not raised in this case. The termination imminent condition is raised if:

- Language Environment is not terminating for cleanup purposes and one or more of the following conditions are true:
  - A user handler is active
  - A PL/I finish on_unit is active
  - The debug handler is active
  - Run-time option TEST(ALL,,) is specified

For any other case, there is no handler that may take action, so termination imminent is not raised to improve performance.

If the program is terminated with one of the following methods, CICS requests the Language Environment-CICS interface routine through the run unit end invocation call to terminate the run unit invocation:

- EXEC CICS ABEND command
- Program Check (abend ASRA by CICS)

Bit0 (abnormal termination) of TERMCODE is ON at this call. If TRAP run-time option is in effect, the Language Environment-CICS interface routine calls the Language Environment exception handler. Otherwise, it returns to CICS.

When Language Environment is called for run unit end invocation again after the exception handling, it performs all the run unit end invocation activities and return to CICS. After control is returned to CICS by Language Environment run unit end invocation, CICS can drive Language Environment run unit termination to do the run unit clean up.

Due to the nature of the activities in the run unit end invocation (for example, storages are not freed and loaded routines are not released), there is no requirement for language-specific run unit end invocation.

Error Recovery

When CICS first finds a program check, it calls the Language Environment-CICS interface routine to examine the exception and perform error recovery, if possible. Because this interface routine is called before CICS calls its own internal recovery procedures, console messages or dumps may not have been issued.

This call allows Language Environment to perform some of the low level error functions. This includes “shunt” routines and the Language Environment application resume function. This routine is not called for CICS ABEND conditions.

The following restrictions apply to this routine:

Error Recovery

- It must always return to the address in R14
- It must not issue any EXEC CICS commands

Syntax

Call CEECCICS (34, *rsncode*, *ptb*, *preasa*) **Retcode** (*rc*)

rsncode **(output)**
A fullword integer; it is initially set to zero.

ptb **(input, output)**
A fullword value containing the address of the Program Termination Block, the TERMINFO structure. This structure contains information regarding the normal and abnormal termination of a run unit. For abnormal termination, information such as PSW, general purpose registers, floating-point registers and access registers at the time of interrupt are provided. A retry mechanism is also provided. Figure 98 on page 428 shows a declaration of the PTB.

preasa **(input, output)**
A preallocated save area passed to Language Environment by CICS. The size of this save area is 248 bytes.

rc **(output)**
The following values should also be placed in R15 on exit. In addition to the return code, the resume code in the PTB must be set.

0 Language Environment can resolve the error; the PSW, general purpose registers, and floating-point registers have been updated.

4 Language Environment could not resolve the error; CICS processing continues.

Determine Working Storage and Static Storage

In order for CICS Execution Diagnostic Facility (EDF) to be able to display the program's working storage (DSA stack) and static storage, CICS makes the determine working storage address call to the Language Environment-CICS interface module. Through the program register save area (*pgmrsa*) argument passed by CICS, Language Environment examines the program entry point (R15 saved in the caller's DSA) to determine if the program is a Language Environment-enabled program. If so, the member ID of the program's language is remembered. Otherwise, the member ID is determined through the *lang* argument passed by CICS.

In either case (Language Environment-enabled or not), the member-specific interface routine associated with the member ID is called to provide the working storage address (most probably same as the *pgmrsa*) and the static storage address and their length. This is because the working storage address could potentially be different than the DSA (as in COBOL) and the static storage could potentially be separate from the program load module.

Syntax

Call CEECCICS (60, *rsncode*, *syseib*, *preasa*, *ptoken*, *ttoken*, *rtoken*, *lang*, *pgmrsa*, *wsa*, *wsl*, *ssa*, *ssl*, *pgmep*) **Retcode** (*rc*)

rsncode **(output)**
A fullword integer that contains one of the following Language Environment reason codes:

16000 Invalid parameter was passed
16030 Language-specific determine working storage address failed
16040 Working storage address and length was not determined

syseib
The system EXEC interface block, as defined by CICS for use by Language Environment and language-specific interface routines. The system EIB address is above 16M. For the information contained in the EIB, see *CICS Application Programming Reference*.

preasa
A preallocated save area passed to Language Environment by CICS. The size of this save area is 248 bytes.

ptoken
A doubleword value containing the Language Environment partition token established at partition initialization.

ttoken
A doubleword value containing the Language Environment thread token established at thread initialization.

rtoken
A doubleword value containing the Language Environment run unit token established at run unit initialization.

lang
A fullword value identifying the language of the program which issued a CICS command. Bit definitions are shown in Figure 99.

```
DCL 1 LANG,                          /* Language of program issuing */
                                     /* HANDLE CONDITION or AID cmd */
      2 ASSEMBLER    BIT(1),         /* LANG=ASSEMBLER              */
      2 C370         BIT(1),         /* LANG=C/370                  */
      2 COBOL        BIT(1),         /* LANG=COBOL II               */
      2 PLI          BIT(1),         /* LANG=PL/I                   */
      2 RPG          BIT(1),         /* LANG=RPG                    */
      2 NOTAPPLIC    BIT(1),         /* LANG=NOTAPPLIC or blank     */
      3 *            BIT(26),        /* Reserved                    */
```

Figure 99. Lang Bit Definition for CEECICS (60)

pgmrsa
A fullword value containing the address of the register save area (DSA) of the program which is issuing the CICS command.

wsa **(output)**
A fullword value to contain the working storage address (DSA) of the program issuing the command.

wsl **(output)**
A fullword value to contain the length of the working storage of the program issuing the command (DSA length).

ssa **(output)**
A fullword value to contain the static storage address of the program issuing the command.

ssl **(output)**
A fullword value to contain the length of the static storage of the program issuing the command.

pgmep
A fullword value to contain the address of the program entry point of the program that is issuing the CICS command.

Perform GOTO Call

When a HANDLE CONDITION condition (label) or a HANDLE AID option (label) or a HANDLE ABEND LABEL (label) is in effect in the user program and CICS raises that condition, the need for transferring control to the specified label arises. This need is satisfied through the perform GOTO call from CICS to the Language Environment-CICS interface module.

Syntax

Call CEECCICS (70, *rsncode*, *syseib*, *preasa*, *ptoken*, *ttoken*, *rtoken*, *lang*, *label*, *invkdsa*, *gotoflgs*) **Retcode** (*rc*)

rsncode **(output)**
A fullword integer that contains one of the following Language Environment reason codes:
17000 Invalid parameter was passed
17040 GOTO Out-Of-Block was not performed
17060 Invalid DSA chain

syseib
The system EXEC interface block, as defined by CICS for use by Language Environment and language-specific interface routines. The system EIB address is above 16M. For the information contained in the EIB, see *CICS Application Programming Reference*.

preasa
A preallocated save area passed to Language Environment by CICS. The size of this save area is 248 bytes.

ptoken
A doubleword value containing the Language Environment partition token established at partition initialization.

ttoken
A doubleword value containing the Language Environment thread token established at thread initialization.

rtoken
A doubleword value containing the Language Environment run unit token established at run unit initialization.

lang
A fullword value identifying the language of the program which issued EXEC CICS HANDLE CONDITION, AID or ABEND command. Bit definitions are shown in Figure 100 on page 435.

```
DCL 1 LANG,                          /* Language of program issuing */
                                     /* HANDLE CONDITION or AID cmd */
      2 ASSEMBLER    BIT(1),         /* LANG=ASSEMBLER              */
      2 C370         BIT(1),         /* LANG=C/370                  */
      2 COBOL        BIT(1),         /* LANG=COBOL II               */
      2 PLI          BIT(1),         /* LANG=PL/I                   */
      2 RPG          BIT(1),         /* LANG=RPG                    */
      2 *            BIT(27),        /* Reserved                    */
```

Figure 100. Lang Bit Definition for CEECICS (70)

label
A fullword value containing the label argument information passed to CICS by the member language-generated code (the CALL statement) for EXEC CICS HANDLE CONDITION or AID or ABEND commands.

For COBOL programs, this is the address of an area (64 bytes) that contains all 16 general registers (in the order of R14, R15, R0-R13) at the time of the HANDLE command. For assembler programs, a resume point and registers 14 and 15 are passed.

invkdsa
A fullword value containing the address of the DSA of the program that caused the condition.

gotoflgs **(output)**
A fullword value that is used to indicate if the GOTO is allowed. Bit definitions are shown in Figure 101.

```
DCL 1 GOTOFLGS,                      /* Perform GOTO Flags          */
      2 GOTONOCD     BIT(1),         /* ON=GOTO cannot be performed */
                                     /* because cross program       */
                                     /* branching is not supported  */
                                     /* by a member language.       */
      2 *            BIT(31),        /* Reserved                    */
```

Figure 101. Lang Bit Definition for GOTOFLGS

CEECTCB — Set TCB+X’144’ Routine

The sole function of this routine is to set TCB+X’144’ to a storage area that is nonfetch protected and set that storage to zero.

CEECTCB is always invoked by the CICS AP-BIND independent of the storage protect feature being on/available.

CEECTCB is called by loading the executable named CEECTCB (using the LOAD SVC service and BALR to the entry point) or by linking directly to CEECTCB (using the LINK SVC service). The CEECTCB executable resides in the SCEERUN data set.

Syntax

CEECTCB

CEECTCB
The load name of the Language Environment routine that alters the storage of TCB+’144’ to point to a nonfetch protected, key 8, block of storage.

Entry Conditions:

1. Execution mode is supervisor state
2. A standard save area is not provided
3. The PSW key is the TCB key (TCBPKF)
4. Extraction authority is needed for IVSK (control reg, bit 4)
5. R1 must be zero
6. R14 is the return address
7. AMODE(31)/RMODE(ANY)
8. ASCMODE is primary

Exit Conditions:

1. Execution mode remains supervisor state
2. R15 contains the following values

R15	Meaning
X'00'	Success
X'04'	The area pointed to by TCB+X'144' was not TCBPKF/fetch protected
X'08'	GETMAIN failure
X'0C'	Setting the value at TCB+X'144' failed (CS failure?)
X'10'	TCB+X'144' was zero
X'14'	Entry into CEECTCB was not in TCBPKF key
X'18'	R1 was not zero upon entry
X'1C'	(TCB+X'144' -> Anchorword) was not zero.

3. The PSW key is same as on entry
4. R2-R14 remain unchanged
5. ARs, FPRs remain unaltered
6. The condition code does not contain any useful information
7. It is CICS' responsibility to delete CEECTCB
8. AMODE and ASCMODE are unchanged

CEECCICS — Partition Initialization Changes

The reason code value of X'11050' denotes partition initialization failure, due to a problem with a CEECTCB failure. CEECCICS checks the value of the field pointed to by TCB+144, for a the eyecatcher CEECTCB value set by CEECTCB. If the eyecatcher is not found, Language Environment partition initialization fails and sets the return code and reason code passed back to CICS appropriately.

If partition initialization was successful, R15 contains 0; otherwise, R15 contains 16. The reason code parameter, *rsncode*, that is passed back to CICS identifies one of the following failures:

rsncode **(output)**
A fullword integer in *nnnffrr* format to contain the member language-specific partition initialization reason code or one of the following Language Environment reason codes:

11000 Invalid parameters were passed
11010 Storage was not available
11020 LIBVEC was not loaded
11030 Language-specific partition initialization was not done
11040 Language Environment process initialization failed, due to an internal abend
11050 Language Environment anchor vector setup failed

IMS Considerations

IMS supports PL/I, C, COBOL, and assembler applications.

IMS to Language Environment

The new interface from IMS to Language Environment supports all Language Environment-enabled languages. ILC capabilities are enhanced. IMS constructs a parameter list as shown in Figure 102.

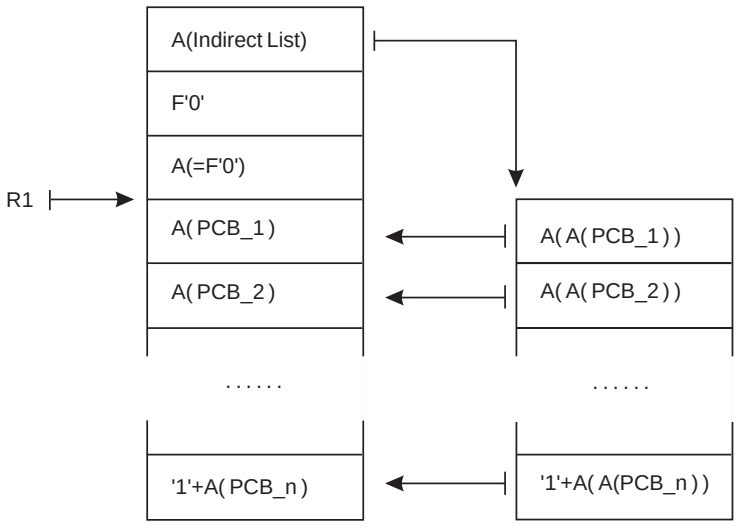

Figure 102. IMS Parameter List Format

Usage Notes:

1. R1 contains the address of a parameter address list. Each word in the list contains the address of a PCB.
2. R1 has the high-order bit on indicating this particular parameter list format.
3. This interface can be manufactured regardless of the mechanism of application invocation (for example, BALR or SVC LINK).
4. IMS always constructs this parameter list format regardless of the LANG option on the PSB.
5. The last word in each of the above boxes has the high order bit set on, as indicated by the ’1’.
6. When the indirect list is passed to the application, the high order bit should be turned off in the last A(PCB_n).

Compatibility Concerns

Current PL/I, COBOL, and assembler support continues to work. Having the high-order bit on in R1 does not alter the use of R1 as an address.

Note: PL/I no longer needs to intercept calls to PLI2DLI. The Language Environment-to-IMS interface enables Language Environment to ask if IMS wants to process any errors that occur.

Also, the LANG option has no effect on the format of the parameter list built by IMS. Thus, any PSB can be used with any HLL application. Any adjustment to the contents of R1 to accommodate the various HLL requirements is performed by the Language Environment or the HLL-specific library, **not** by IMS.

Language Environment to IMS — CEETDLI

Language Environment is providing a callable service, CEETDLI, that is callable from any HLL that provides R12 pointing to the CAA and R13 pointing to a DSA. It has the same programming requirements (parameters) as the pre-Language Environment entry names: CTDLI, ASMTDLI, and CBLTDLI.

The Language Environment callable service calls IMS through a new entry point in module DFSLI000: DFSLICEL. The parameter list and the caller's save area can reside above or below the 16M line.

DFSLI000 is linked with the user's application code, and DFSLICEL is entered in the AMODE of the application.

The *parmcount* parameter is optional for CEETDLI.

CEETDLI uses a 2-byte length field (LL) indicating the total length of an IMS message or Scratch Pad Area (SPA). CEETDLI employs a flat parameter list. That is, each entry in the parameter address list points directly to the argument. The parameters described in the *IMS/ESA Application Programming: Design Guide* should be used with the new name CEETDLI.

The ABTERMENC(ABEND) run-time option or the CEEBXITA assembler user exit can be used by the installation to force an abend at application termination. These methods force data base rollbacks for applications terminating abnormally.

The PLITDLI, CBLTDLI, ASMTDLI, and CTDLI interfaces continue to function in their current capacity.

Implementation

IMS always constructs the parameter list as shown in Figure 102 on page 437, regardless of the LANG option in the PSB.

IMS also adds a new entry point to DFSLI000 called DFSLICEL. This entry supports any of the member languages running in the Language Environment environment. Only Language Environment-enabled code should call CEETDLI.

On entry to CEETDLI, Language Environment takes the appropriate steps to insure exceptions and abends that occur while executing in IMS code are percolated.

Chapter 14. Anchor Support

The Language Environment anchor is the address of Language Environment's main control block, the CAA. There is one CAA per thread, and the CAA is created during thread initialization. When the address of the anchor is unknown to the executing routine, it must be obtained. This usually occurs when an old routine calls a newly compiled, Language Environment-enabled routine. Upon entry into the new routine, the Language Environment anchor service must be able to return the Language Environment anchor using the same sequence of code regardless of the environment under which the application is executing.

Under CICS, one CAA exists per CICS run unit. Because multiple CICS run units can exist under one z/OS TCB, the TCB cannot directly hold the address of the CAA. However, the TCB can point to a code sequence that obtains the anchor.

Anchor Service

Figure 103 shows the anchor service, which is based upon the z/OS control block structure. In particular, it is based upon the CVT and the TCB. A fullword field has been reserved in the z/OS TCB for Language Environment's use at TCB+X'144'. This TCB fullword points to a doubleword field that can be altered by Language Environment initialization/termination routines. Language Environment uses the first fullword to point to a control block known as the Language Environment anchor vector. The Language Environment anchor vector contains the addresses of two routines, the fetch anchor routine and the set anchor routine. At offset X'08' is a pointer to the fullword where the CAA address is saved. When this field is zero, the CAA address must be obtained using the get anchor routine.

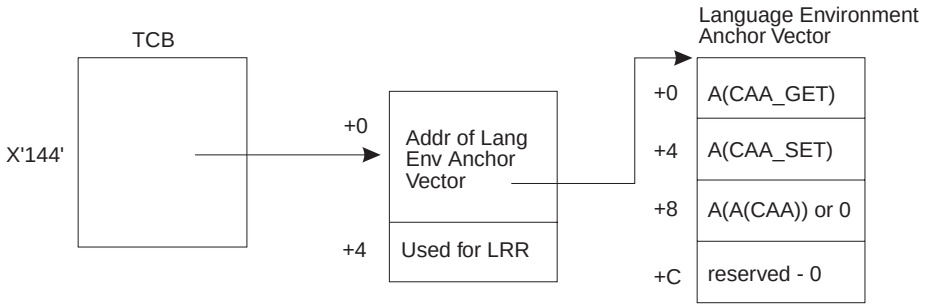

Figure 103. Structure of the Language Environment Anchor Vector

Fetch the Anchor Routine

The fetch anchor routine retrieves the current Language Environment anchor and returns it to its caller. A standard code sequence is employed to allow programs to obtain the anchor in a similar manner without incurring the overhead of specialized code for each operating system. The input for this routine is:

- R12 has the entry point address.
- R14 has the return address.

As output for this routine, R12 has the returned CAA.

The code sequence to call the get anchor routine is:

```
L    R12,16          Get the CVT address
L    R12,0(R12)      A(TCB old/new)
L    R12,4(R12)      A(TCB New)
```

© Copyright IBM Corp. 1991, 2002

Anchor Introduction

```
L    R12,X'144'(R12)  A(A(Language Environment Anchor Vector)) from TCB
L    R12,0(R12)       A(Language Environment Anchor Vector)
L    R12,0(R12)       A('Get Anchor' Routine)
BALR R14,R12          Go get the anchor.
```

Get anchor routine requirements:

1. R0 and R12 are destroyed across this call. All other registers are preserved.
2. The Language Environment anchor is returned in R12.
3. R14 is used as the return register.
4. The only available work registers are R12 and R0.
5. A save area is not provided by the caller.
6. AMODE switching is not performed.
7. This code sequence assumes Language Environment is active.

Set the Anchor Routine

The set anchor routine saves the token (for example, the address of the CAA) for future retrieval requests. This can also be used to reset the anchor to zero.

A standard code sequence is employed to allow programs to set the anchor in a similar manner without incurring the overhead of specialized code for each operating system.

The input for this routine is:

- R12 has the CAA address or zero.
- R14 has the return address.
- R15 has the entry point address.

No output is generated for this routine.

The code sequence to call this routine is as follows:

```
L    R15,16           Get the CVT address
L    R15,0(R15)       A(TCB old/new)
L    R15,4(R15)       A(TCB New)
L    R15,X'144'(R15)  A(A(Language Environment Anchor Vector)) from TCB
L    R15,0(R15)       A(Language Environment Anchor Vector)
L    R15,4(R15)       A('Set Anchor' Routine)
*
*  Note that R12 either has the anchor or zero
*
BALR R14,R15          Go set the anchor.
```

Set anchor routine requirements:

1. The available registers are R0, R12, R14, and R15. All other registers are preserved.
2. A save area is not provided by the caller.
3. AMODE switching is not performed.
4. This code sequence assumes the Language Environment environment is active.

CEEARLU — Anchor Lookup

This routine sets register 12 to the Language Environment anchor. The anchor points to the CAA if Language Environment has been initialized.

Syntax

Call CEEARLU

CEEARLU

Call this CWI interface as follows:

```
L      R15,=V(CEEARLU)
BALR   R14,R15
```

Usage Notes:

1. Upon return, R12 contains the address of the CAA, or zero if Language Environment has not been initialized.
2. R14 and R15 are used as linkage registers. R0 is destroyed across the call. R13 is **not** used.
3. This routine is meant to be a fast way of retrieving the anchor. The address of the CAA is not validated by this routine.
4. AMODE switching is not performed across this call.
5. For additional information on the anchor lookup, see Chapter 14, “Anchor Support” on page 439.
6. If the Language Environment environment is not initialized, a value of zero is returned. This routine does not cause the Language Environment environment to be established.
7. It must be linked with the program. It is not meant to be called from an HLL program.

Anchor Considerations

ATTACH processing obtains a doubleword containing the address of the anchor vector in writable storage and initializes it to zero. In addition, the field at TCB+X’144’ is initialized to point to this doubleword.

z/OS extends the size of the GETMAINed storage area by a doubleword used for the program’s initial register save area. Note that the fullword for the service routine vector address is contained within the user’s private space.

During Language Environment initialization, a Language Environment anchor vector is GETMAINed and initialized. The address of the GETMAINed anchor vector is placed into the first fullword provided by z/OS. The code shown in Figure 104 on page 442 is an example of the Language Environment anchor vector code used to set and obtain the Language Environment anchor. Language Environment saves the anchor value directly within the Language Environment anchor vector. At offset X'08' is a pointer to the fullword where the CAA address is saved. This does **not** occur under other systems/subsystems.

```
ANCHOR   CSECT
         DC  A(GETCAA)       A(Obtain the Current CAA Addr)
         DC  A(SETCAA)       A(Set the current CAA Addr)
         DC  A(CAA)          Pointer to the saved CAA address
         DC  A(0)            Reserved
*************************************************************
*   Obtain the current CAA Pointer                          *
*************************************************************
GETCAA   DS  0H
         L   12,CAA-GETCAA(12)    Get the anchor into R12
         BR  14                   Return to the caller
*************************************************************
*   Set the current CAA Pointer                             *
*************************************************************
SETCAA   DS  0D
         ST  12,CAA-SETCAA(15)    Save/clear the anchor
         BR  14                   Return to the caller
*************************************************************
*   Misc writable storage                                   *
*************************************************************
CAA      DC  A(0)                 Spot to save the anchor
         DS  0D
SIZE     EQU *-ANCHOR
         END
```

Figure 104. Example of Code to Set and Obtain the Language Environment Anchor

Bypassing Anchor Lookup, Set, or Reset

The CEEPIPI(call_sub_addr_nochk) call invokes a subroutine without causing Language Environment to perform anchor look-up, set, or reset. For more information, including the call syntax, see “CEEPIPI (call_sub_addr_nochk) and CEEPIPI (call_sub_addr_nochk2) — Invocation for Subroutine by Address” on page 186.

Chapter 15. Member Language Information

This section addresses the compiler and library programmers of those HLLs that run in Language Environment. It contains a list of restricted host system services, an overview of the structure of the executable program, and how the member languages interact with Language Environment.

OS Services — Restricted Use

Language Environment provides a set of services that are used to insulate the HLL library routines from the underlying host system or subsystem. In providing such functions, the HLL library routines should use the Language Environment-provided services even though a similar service is provided by the underlying system. If the underlying system service is used, Language Environment cannot guarantee some of the consequences that might occur. Listed below is a set of those services which should be avoided because they might interfere with the Language Environment operations. The use of the services should be avoided by members.

Service
: **Language Environment Equivalent Service**

GETMAIN
: Language Environment heap storage services.

FREEMAIN
: Language Environment heap storage services.

LINK
: The LINK is recognized as an enclave boundary for compatibility. A call of DFSORT requires a LINK SVC to be issued. Special action needs to be taken to support DFSORT calls.

XCTL
: Language Environment does not provide an exact equivalent substitute function. The use of CEEPLOD and a BALR entry (with additional logic) should be sufficient to support XCTL.

LOAD
: Language Environment program management CEEPLOD.

DELETE
: Language Environment program management CEEPDEL.

ABEND
: Language Environment CEE3ABND service is an alternative. Signaling (through CEESGL) a condition is a preferred method.

SPIE
: The entire Language Environment condition management scheme minimizes the need to issue a SPIE. Issuing a SPIE directly interferes with Language Environment's operation. Many aspects of Language Environment's condition management can be used to advantage, such as the shunt service, the enablement phase, and default handling.

STAE
: The entire Language Environment condition management scheme minimizes the need to issue a STAE. Issuing a STAE directly interferes with Language Environment's operation. Many aspects of Language Environment's condition management can be used to advantage, such as the shunt service, the enablement phase, and default handling.

STAX
: The entire Language Environment condition management scheme minimizes the need to issue a STAX. However, issuing a STAX might prove to be useful in some instances.

Structure of Executable Programs

An executable program that is fully Language Environment-enabled contains Language Environment-generated compiled code and some additional constructs, which are listed below:

© Copyright IBM Corp. 1991, 2002

CEESTART
This CSECT is pointed to by PPA2. It contains an external adcon for an externals table for various pieces of information concerning the executable program.

CEEBETBL
This is a CSECT, pointed to by CEESTART, that contains various external adcons for the executable program. Two adcons are especially important: the address of the assembler user exit and the language list.

CEEBLLST
This is a CSECT that contains a series of weak external adcons for the signature CSECTs the HLLs produce. If a particular slot in this vector of adcons is nonzero, a member has been identified as being present in the executable program.

CEEINT
This is the Language Environment bootstrap routine. The main function of this routine is to dynamically load the Language Environment initialization routines and then transfer control over to the routine that does the work of bringing up Language Environment.

Central Control Blocks

The Language Environment program model describes four levels: region, process, enclave, and thread. A control block is established to manage each of these levels:

RCB Region Control Block
PCB Process Control Block
EDB Enclave Data Block
CAA Thread level resource (Common Anchor Area)

Each HLL is enrolled as a member within the Language Environment environment. The list of members is known as the *member list*. This is an array of structures, indexed by the member ID, that contains member-specific information, and the address of an event handler.

Two member lists are maintained within Language Environment, one at the process level, the other member list is found at the enclave level. Each slot within either member list for any given member has the same format.

The event handler for each HLL that is represented in the executable program is loaded during Language Environment-initialization, and its address saved in the appropriate slot in the member list. When certain events occur, the event handler is called to either notify the member that the event has occurred, or to solicit some information from the member.

To identify those member languages that are represented in the executable program, each member language has to generate a *signature CSECT* whose name is unique to that particular member language. Checking for the presence of this uniquely named CSECT, one can determine if the member language is represented. Language Environment performs this check during initialization. Language Environment maintains a list of weak external address constants, which can be found through the CEESTART CSECT.

The Event Handler

The *event handler* is a member-supplied routine that is called at various times as a program runs when a significant event has occurred, or when the environment needs some information that is held by the member.

During environment initialization, Language Environment determines the set of members present in the application and loads the event handler for each member language. The name of the event handler is manufactured by concatenating a fixed prefix and the member ID. The name constructed is CEEEV*nnn*, where *nnn* is the member number. The address of the event handler is saved for later retrieval. The values for *nnn* are in Figure 15 on page 17.

Linkage to the member event handler is through BALR 14,15, and R1 contains a standard parameter address list. The first parameter always indicates the type of event for which the event handler has been called. Additional parameters are dependent upon the specific event.

A return code is placed in R15 by the event handler. The following return codes are defined:

-4 The event handler does not want to process the event.
0 The event handler was successful.
16 The event handler encountered an unrecoverable error.

All environment services are available during the handling of the event, including the stack and heap, except for the options event and the main-opts event. This is event code 4, which is called by environment initialization to allow compatibility processing of run-time options.

With the exception of the CAA, PCB, process member list (MEML), and anchor vector, Language Environment can allocate control blocks above the line. Any member code that accesses a Language Environment control block must run in AMODE(31) to have addressability to the control blocks.

The event handler is called with the dump event code, 7, while processing various dump services. The dump event code has a function code that describes which dump service is to be performed. The remaining parameters for the dump event vary according to the specific sub-function code.

Language utilities function 6 has a sub-function code that describes what information is being requested. The remaining parameters for the utilities event vary according to the specific function code.

The dump event is expanded in “Event Code 7 — Dump Event Handler Event” on page 455. The utility event is expanded in “Event Code 6 — Event Handler Utilities Event” on page 451.

Event Handler Calls

The following is the description of the event handler calls. The calls are used in all environments unless otherwise noted.

Event Code 1 — Handle Condition Represented by the CIB Event

Syntax

Call CEEEVnnn (1, *ceecib, results, new_condition*)

```
void     *ceecib;
INT4     *results;
FEEDBACK *new_condition;
```

ceecib **(input)**
The CEECIB for which the condition handler is being called. This value is passed by reference. Part of the CEECIB is the condition_token and the machine environment for the procedure in which the condition occurred. (For more details, see “Language Environment Condition Information Block” on page 264.)

results **(output)**
The field that contains the instructions indicating the actions that the language-specific handler wants the Language Environment condition manager to take as a result of processing the condition. This field is passed by reference. The following are valid responses:

resume	10	Resume at the resume cursor (condition has been handled).
percolate	20	Percolate to the next condition handler.
	21	Percolate to the first user condition handler for the next stack frame. (This can skip a language-specific exception handler for this stack frame as well as the remaining user condition handlers in the queue at this stack frame.)
promote	30	Promote to the next condition handler.
	31	Promote to the next stack frame. (This can skip a language-specific exception handler for this stack frame as well as any remaining user condition handlers in the queue at this stack frame.)
	32	Promote and restart condition handling with the first condition handler for the stack frame that is denoted by the handler cursor location.
	33	Promote and restart condition handling with the first condition handler for the stack frame that is denoted by the resume cursor location.
enablement	40	Ignore the condition; the thread is resumed where interrupted.
	41	Enable the condition for condition handling.
	42	Enable the condition and transform the condition (using the *new_condition* parameter).
percolate enablement	50	Percolate the enablement to the calling stack frame.
	51	Transform the condition (using the *new_condition* parameter) and percolate the enablement to the calling stack frame.

new_condition **(output)**
The new condition token representing the promoted condition. This field is used only for *result* values that denote *promote*.

Usage Notes:

1. For a description of the calling method, see “Language Environment Member List and Event Handler” on page 74.
2. It is not valid to promote a condition without returning a new condition token. If the original condition is returned in *new_condition*, the condition manager acts as if 20 had been specified as the *results* value.
3. Prior to a condition being promoted, the Message Insert Block (MIB) must be populated with the new inserts for the promoted condition if necessary.
4. The language-specific handlers are automatically established by stack frame. The Language Environment condition manager determines the language

associated with a given stack frame, and then calls the event handler with the appropriate event code for enablement, condition handling, or condition handling for stack frame zero.

5. The language-specific handlers are automatically disestablished when the stack frame is popped off the stack either using a return, a GOTO out of block, or moving the resume cursor.
6. If a *resume* is requested, the member that owns the target stack frame is called immediately prior to passing control to the target stack frame. For details, see "Event Code 10 — Resume from a Condition Handler Event" on page 461.

Event Code 2 — Perform Enablement for this Stack Frame Event

Syntax

Call CEEEVnnn (2, *ceecib, results, new_condition*)

```
void     *ceecib;
INT4     *results;
FEEDBACK *new_condition;
```

ceecib **(input)**
The CEECIB for which the condition handler is being called. This value is passed by reference. Part of the CEECIB is the condition_token and the machine environment for the procedure in which the condition occurred. (For more details, see "Language Environment Condition Information Block" on page 264.)

results **(output)**
The field that contains the instructions indicating the actions the language-specific handler wants the Language Environment condition manager to take as a result of processing the condition. This field is passed by reference. The following are valid responses:

resume	10	Resume at the resume cursor (condition has been handled).
percolate	20	Percolate to the next condition handler.
	21	Percolate to the first user condition handler for the next stack frame. (This can skip a language-specific exception handler for this stack frame as well as the remaining user condition handlers in the queue at this stack frame.)
promote	30	Promote to the next condition handler.
	31	Promote to the next stack frame. (This can skip a language-specific exception handler for this stack frame as well as any remaining user condition handlers in the queue at this stack frame.)
enablement	40	Ignore the condition; the thread is resumed where interrupted.
	41	Enable the condition for condition handling.
	42	Enable the condition and transform the condition (using the *new_condition* parameter).
percolate enablement	50	Percolate the enablement to the calling stack frame.
	51	Transform the condition (using the *new_condition* parameter) and percolate the enablement to the calling stack frame.

Enablement for this Stack Frame Event

new_condition **(output)**
The new condition token representing the promoted condition. This field is used only for *result* values that denote *promote*.

Usage Notes:

1. For a description of the calling method, see “Language Environment Member List and Event Handler” on page 74.
2. It is invalid to promote a condition without returning a new condition token. If the original condition is returned in *new_condition*, the condition manager acts as if a *result* of 20 had been specified.
3. Prior to a condition being promoted, the MIB must be populated with the new inserts for the promoted condition if necessary.
4. The language-specific handlers are automatically established by stack frame. The Language Environment condition manager determines the language associated with a given stack frame, and then calls the event handler with the appropriate event code for enablement, condition handling, or condition handling for stack frame zero.
5. The language-specific handlers are automatically disestablished when the stack frame is popped off the stack either using a return, a GOTO out of block, or moving the resume cursor.
6. If a *resume* is requested, the member that owns the target stack frame is called immediately prior to passing control to the target stack frame. For details, see “Event Code 10 — Resume from a Condition Handler Event” on page 461.

Event Code 3 — Handle Condition According to Language Defaults Event

Syntax

Call CEEEVnnn (3, *ceecib, results, new_condition*)

```
void     *ceecib;
INT4     *results;
FEEDBACK *new_condition;
```

ceecib **(input)**
The CEECIB for which the condition handler is being called. This value is passed by reference. Part of the CEECIB is the condition_token and the machine environment for the procedure in which the condition occurred. (For more details, see “Language Environment Condition Information Block” on page 264.)

results **(output)**
The field that contains the instructions indicating the actions the language-specific handler wants the Language Environment condition manager to take as a result of processing the condition. This field is passed by reference. The following are valid responses:

resume	10	Resume at the resume cursor (condition has been handled).
percolate	20	Percolate to the next condition handler.
	21	Percolate to the first user condition handler for the next stack frame. (This can skip a language-specific exception handler for this stack frame as well as the remaining user condition handlers in the queue at this stack frame.)

promote	30	Promote to the next condition handler.
	31	Promote to the next stack frame. (This can skip a language-specific exception handler for this stack frame as well as any remaining user condition handlers in the queue at this stack frame.)
	33	Promote and restart condition handling for the first condition handler for the stack frame that is denoted by the resume cursor location.
enablement	40	Ignore the condition; the thread is resumed where interrupted.
	41	Enable the condition for condition handling.
	42	Enable the condition and transform the condition (using the *new_condition* parameter).
percolate enablement	50	Percolate the enablement to the calling stack frame.
	51	Transform the condition (using the *new_condition* parameter) and percolate the enablement to the calling stack frame.

new_condition **(output)**
The new condition token representing the promoted condition. This field is used only for *result* values that denote *promote*.

Usage Notes:

1. For a description of the calling method, see “Language Environment Member List and Event Handler” on page 74.
2. It is invalid to promote a condition without returning a new condition token. If the original condition is returned in *new_condition*, the condition manager acts as if a *result* of 20 had been specified.
3. Prior to a condition being promoted, the MIB must be populated with the new inserts for the promoted condition if necessary.
4. The language-specific handlers are automatically established by stack frame. The Language Environment condition manager determines the language associated with a given stack frame, and then calls the event handler with the appropriate event code for enablement, condition handling, or condition handling for stack frame zero.
5. The language-specific handlers are automatically disestablished when the stack frame is popped off the stack either using a return, a GOTO out of block, or moving the resume cursor.
6. If a *resume* is requested, the member that owns the target stack frame is called immediately prior to passing control to the target stack frame. For details, see “Event Code 10 — Resume from a Condition Handler Event” on page 461.

Event Code 4 — Run-Time Options Event

This event has limited capabilities; no Language Environment callable services are available. The purpose is to allow the members to handle run-time options in a compatible fashion.

Syntax

Call CEEEVnnn (4, *ocb_addr, ceestart_addr, inpl_addr, work_area*)

```
POINTER   *ocb_addr;
POINTER   *ceestart_addr;
POINTER   *inpl_addr;
POINTER   *work_area;
```

ocb_addr **(input)**
The address of an OCB

ceestart_addr **(input)**
The address of CEESTART

inpl_addr **(input)**
The address of the main entry point

work_area **(input)**
The address of a 512-byte work area

Usage Notes:

1. This event is not called if a CEEUOPT CSECT is found in the load module, or if more than one member is present in the load module.
2. Only the member identified by the member ID in the INPL is called.

Event Code 5 — Main-opts Event

If INPL is control level 0 and the number of words indicate 6, or the control level is 1 and the invoke_mainopts flag is set, then the event handler whose member ID is found in the INPL is called requesting the main-opts word to be dynamically completed. If the event does not produce a main-opts word (indicated by returning a -4 in R15 or leaving the main-opts word unaltered), the following characteristics are assumed for the main-opts word: PLIST(HOST) and EXECOPS.

Syntax

Call CEEEVnnn (5, *inpl_addr, R13_addr, R0_addr, R1_addr, main_opt_addr*)

```
POINTER   *inpl_addr;
POINTER   *R13_addr;
POINTER   *R0_addr;
POINTER   *R1_addr;
POINTER   *main_opt_addr;
```

inpl_addr **(input)**
The INPL passed to CEEINT or CEEP#INT or the INPL generated by CEEPIPI.

R13_addr **(input)**
A fullword containing the R13 value passed into CEEINT or CEEP#INT or CEEPIPI (call_main).

R0_addr **(input)**
A fullword containing the R0 value passed into CEEINT or zero when CEEP#INT or CEEPIPI (init_main) are the enclave initialization method.

R1_addr **(input)**
A fullword containing the R1 value passed into CEEINT or zero when CEEP#INT or CEEPIPI (init_main) are the enclave initialization method.

main_opt_addr **(input)**
The main-opts word.

Usage Notes:

1. This event is invoked while processing a CEEPIPI (call_main) and calling a program with the any of the following:
   - The entry point style is not CEESTART
   - The entry point style is CEESTART and CEEMAIN is old format
   - The entry point style is CEESTART,CEEMAIN is new format, the INPL is new format, and the main-opts word is not valid
2. A fixed size stack is available for use during this event.

Event Code 6 — Event Handler Utilities Event

Various Language Environment services, including exception handling, perform language-specific functions. To perform these functions, Language Environment receives information through the member language utility exit. The utility exit passes Language Environment the information it needs to perform the required processing. It is a part of a member event handler, using event code 6. Language Environment Dump Processing makes calls to member event handler 6 (Utilities). Many of theses calls provide a DSA address as input and expect the member to provide information about the routine that owns the stack frame. The description and linkage to the event handler for each of these exits is shown below. All linkages have the event code of 6, followed by a unique function code, followed by parameters specific to the utility.

Member Event Handler Event 6 (Utilities)

This event code performs several functions based upon the function_code passed as the second parameter.

There are four function_codes for which the DSA address is passed as input:

1 DSA Ownership
2 Entry Point and Compile Unit Identification
3 Statement Identification
4 DSA Classification

DSA Ownership

For this exit, a member language specifies if a DSA is associated with a routine that it owns, or a routine that is written in that language. Language Environment uses this exit to determine the owner of code that does not have a PPA-style entry. Language Environment first checks to see if the code contains a PPA-style entry. The eye catcher of the saved R15 in the caller's DSA is checked to determine if it points to a Language Environment entry point. If this is not true, Language Environment calls member language exits for DSA ownership until a language claims ownership.

Syntax

Call CEEEVnnn (6, 1, *dsaptr, ownership, dsa_format*)

```
POINTER   *dsaptr;
INT4      *ownership;
INT4      *dsa_format;
```

dsaptr **(input)**
A fullword pointer to an active DSA or save area.

ownership **(output)**
A fullword binary integer set to contain:
0 The source code corresponding to the DSA is not in the member language.
1 The source code corresponding to the DSA is in the member language.

dsa_format **(input)**
A fullword binary integer set to one of the following:
0 The format of the DSA is a Standard OS Linkage register save area (with/without Language Environment fields including NAB).
1 The format of the DSA is XPLINK style.

Entry Point and Compile Unit Identification

For this exit, a member language identifies the entry point name, entry address, compile unit name, compile unit address, and current instruction address for a routine, given the DSA, CAA, and CIB associated with the routine. This exit is called only if a routine does not have a PPA-style entry.

Syntax

Call CEEEVnnn (6, 2, *dsaptr*, *cibptr*, *compile_unit_name*, *compile_unit_name_length*, *compile_unit_address*, *entry_name*, *entry_name_length*, *entry_address*, *call_instruction_address*, *caaptr*, *dsa_format*)

```
POINTER   *dsaptr;
POINTER   *cibptr;
CHAR      *compile_unit_name;
INT4      *compile_unit_name_length;
POINTER   *compile_unit_address;
CHAR      *entry_name;
INT       *entry_name_length;
POINTER   *entry_address;
POINTER   *call_instruction_address;
POINTER   *caaptr;
INT4      *dsa_format;
```

dsaptr **(input)**
A fullword pointer to an active DSA or save area.

cibptr **(input)**
A fullword pointer to the CIB for the current condition, if one exists. Otherwise, this parameter is zero.

compile_unit_name **(output)**
A fixed-length character string of arbitrary length to contain the name of the compile unit containing the routine associated with the DSA. If the compile unit name cannot be determined, this parameter should be set to all blanks. If the compile unit name cannot fit within the supplied string, it should be truncated. (Truncation of DBCS should preserve even byte count and SI/SO pairing.)

compile_unit_name_length **(output)**
A fullword binary integer containing the length of the compile unit name string on entry and to contain the actual length of the compile unit name placed in the string on exit. If the compile unit name cannot be determined, this parameter should be set to zero. The maximum length a string can be is 256 bytes.

compile_unit_address **(output)**
A fullword binary integer to contain the address of the start of the compile unit. If the compile unit address cannot be determined, this parameter should be set to zero.

entry_name **(output)**
A fixed-length character string of arbitrary length to contain the name of the entry point into the routine associated with the DSA. If the entry point name cannot be determined, this parameter should be set to all blanks. If the entry point name cannot fit within the supplied string, it should be truncated. (Truncation of DBCS should preserve even byte count and SI/SO pairing.)

entry_name_length **(output)**
A fullword binary integer containing the length of the entry point name string on entry and to contain the actual length of the entry point name placed in the string on exit. If the entry point name cannot be determined, this parameter should be set to zero. The maximum length a string can be is 256 bytes.

entry_address **(output)**
A fullword binary integer to contain the address of the entry point. If the entry address cannot be determined, this parameter should be set to zero.

call_instruction_address **(output)**
A fullword binary integer to contain the address of the instruction which transferred control out of the routine. This should either be the address of a calling instruction, such as BALR or BASSM, or the address of an interrupted instruction if control was transferred due to an exception. If the address cannot be determined, this parameter should be set to zero.

caaptr **(input)**
A fullword pointer to the CAA for the enclave associated with the DSA.

dsa_format **(input)**
A fullword binary integer set to one of the following:

0 The format of the DSA is a Standard OS Linkage register save area (with/without Language Environment fields including NAB).

1 The format of the DSA is XPLINK style.

Statement Identification

For this exit, a member language identifies the statement number given an instruction address and the entry address into a routine. Also, the address of the DSA for the routine and the address of the CIB for the routine are passed, in case current register contents are also needed to determine the statement number.

Syntax

Call CEEEVnnn (6, 3, *entry_address*, *call_instruction_address*, *dsaptr*, *cibptr*, *statement_id*, *statement_id_length*, *dsa_format*)

```
POINTER   *entry_address;
POINTER   *call_instruction_address;
POINTER   *dsaptr;
POINTER   *cibptr;
CHAR      *statement_id;
INT4      *statement_id_length;
INT4      *dsa_format;
```

entry_address **(input)**
A fullword binary integer containing the address of an entry point into the routine.

call_instruction_address **(input)**
A fullword binary integer containing the address of an instruction in the statement to be identified.

Note that this can also be the address of an instruction in a small routine that does not have its own DSA (for example, fetch glue code). In such cases, the small routine is considered an extension of the code for the statement which called the routine. In these cases, the member language should pass back the statement number of the caller of the small routine.

dsaptr **(input)**
A fullword pointer containing the address of the DSA for the routine.

cibptr **(input)**
A fullword pointer containing the address of the CIB for the current condition. If there is no CIB, this parameter is zero.

statement_id **(output)**
A fixed-length character string of arbitrary length to contain the statement identifier of the instruction pointed to by *call_instruction_address*. If the statement cannot be determined, this parameter should be set to all blanks. If the statement ID cannot fit within the supplied string, it should be truncated. (Truncation of DBCS must preserve even byte count and SI/SO pairing.)

statement_id_length **(output)**
A fullword binary integer containing the length of the statement id string on entry and the actual length of the statement id placed in the string on exit. If the statement ID cannot be determined, this parameter should be set to zero. The maximum length a string can be is 256 bytes.

dsa_format **(input)**
A fullword binary integer set to one of the following:

0 The format of the DSA is a Standard OS Linkage register save area (with/without Language Environment fields including NAB).

1 The format of the DSA is XPLINK style.

DSA Classification

For this exit, a member language identifies the type of DSA that is associated with the procedure.

Syntax

Call CEEEVnnn (6, 4, *dsaptr, class*, *dsa_format*)

```
POINTER   *dsaptr;
INT4      *class;
INT4      *dsa_format;
```

dsaptr **(input)**
A fullword pointer containing the address of the DSA or save area.

class **(output)**
A fixed-binary(31) fullword passed by reference indicating the classification of the passed DSA. The following is the format of the returned fullword. It can be

quickly checked to distinguish library code from compiled code, identify the member, and allow the members to qualify the type of compiled/library if needed.

```
X'abcd yyzz'

zz - is the member ID with a max of X'FF'
yy - is used by the member to qualify the compiled
     code type or the library code type
d  - 1 if library code; 2 if compiled code
```

dsa_format **(input)**
A fullword binary integer set to one of the following:

0 The format of the DSA is a Standard OS Linkage register save area (with/without Language Environment fields including NAB).

1 The format of the DSA is XPLINK style.

The following list is the set of acceptable return values.

X'0001 0001'	Library routine	Language Environment
X'0001 0003'	Library routine	C/C++
X'0001 0005'	Library routine	COBOL
X'0001 0006'	Library routine	Debug Tool
X'0002 0003'	Compiled code	C/370 or C/C++
X'0002 0005'	Compiled code	COBOL
X'0002 0006'	Compiled code	Debug Tool

Event Code 7 — Dump Event Handler Event

CEL Dump Processing makes calls to member event handlers for event code 7 (Dump). Many of these calls provide a DSA address as input and expect the member to provide information about the routine that owns the stack frame. This event handler code performs several CEEDUMP related functions based upon the function_code passed as the second parameter.

There are five function_codes for which the DSA address is passed as input:

2 Dump arguments of a routine
3 Dump variables of a routine
4 Dump control blocks associated with a routine.
5 Dump storage for a routine.
18 Dump condition information for DSA/CIB.

Calls to dump event handler are made with parameters shown in the following sample procedure statement:

Syntax

Call CEEEVnnn (7, *function_code, additional_parms, fc, entry_ptr, dsa_format, call_addr*)

```
INT4      *function_code;
POINTER   *dsaptr;
POINTER   *cibptr;
POINTER   *caaptr;
POINTER   *edbptr;
POINTER   *pcbptr;
FEEDBACK  *fc;
POINTER   *entry_ptr;
INT4      *dsa_format;
POINTER   *call_addr;
```

function_code **(input)**

A fullword binary integer that specifies the dump function to be performed. It must contain one of the following values:

1 Dump an informational message to explain why the dump is being taken. This *function_code* specifies that the exit of the language library that called CEE3DMP print the error message that resulted from the dump being taken in the first place. The informational messages would normally be a copy of the error messages sent to MSGFILE for the error. These messages could contain an ABEND code, the PSW, and register contents at time of the error. If CEE3DMP was not called by a member language library, member language libraries would normally not print any messages in this exit.

2 Dump the arguments of a routine. If the member language cannot distinguish between arguments and local variables for a routine, it should dump the arguments at the same time it is called by dump services to dump variables.

3 Dump the variables of a routine. This includes all local variables and any shared external variables used by the routine. Member language libraries should dump only those variables used or set by the routine if this can be determined.

4 Dump control blocks associated with a routine. This includes the DSA mapped by the member language and any other control blocks associated with the routine that are useful for debugging. This includes compile information, symbol tables, and statement tables.

5 Dump storage for a routine. This includes automatic stack frame storage and static local variable storage. Static data storage shared between this routine and another routine should also be dumped. Only one copy of a shared storage area should be dumped though.

6 Dump control blocks associated with a thread. The CAA for the thread is dumped by Language Environment.

7 Dump storage associated with a thread. Language Environment dumps all stack storage associated with the thread. Member languages can dump any other stack storage that is associated with the thread using this exit. Any stack storage used by the thread is dumped even though it can not be associated with it. Only data storage should be dumped. Storage containing code should not be dumped if possible.

8 Dump control blocks associated with an enclave. The EDB for the enclave is dumped by Language Environment as well as the member list. Member languages should dump communications areas that are linked off of the member list. These are usually the static library communications regions that are part of the application load module.

9 Dump storage associated with an enclave. Language Environment dumps all heap storage associated with the enclave. Member languages can dump any other storage that is associated with the enclave using this exit. This usually includes storage obtained through direct calls to the operating system storage management. Only data storage should be dumped. Storage containing code should not be dumped if possible.

10 Dump status and attributes of files. Language Environment dumps the status and attributes of files used by message services. Member languages should dump status and attributes of their own files. This includes all currently open files as well as any previously open files in the course of running an application.

11 Dump control blocks associated with files. Control blocks and other language-specific control blocks that keep file status are dumped.

12 Dump storage buffers associated with files. These buffers are allocated by the operating system and typically do not use Language Environment heap services. Buffer storage allocated by Language Environment heap services can be dumped.

13 Dump control blocks associated with the process. The PCB for the process is dumped by Language Environment.

14 Dump storage associated with the process. Only data storage should be dumped. Storage containing code should not be dumped.

15 Dump any additional global information. This information appears at the end of the dump report. A list of loaded library modules is an example of additional global information.

16 Dump the variables of the enclave. This includes all static external variables used by the enclave.

17 End of dump call. This indicates that there are no additional calls to the event handler for this instance of dump.

18 Dump condition information associated with the passed DSA/CIB pointer. For example, PL/I displays ONCHAR, ONSOURCE, ONKEY, and ONCOUNT values when applicable.

additional_parms **(input)**

Parameters specific to a certain function code. The following diagram shows the parameters for each function code. Notice that the dump_event_code 7 always precedes the function code.

Syntax by Function Code

Call CEEEVnnn (7, 1, *fc*)
Call CEEEVnnn (7, 2, *dsaptr, cibptr, caaptr, fc, entry_ptr, dsa_format, call_addr*)
Call CEEEVnnn (7, 3, *dsaptr, cibptr, caaptr, fc, entry_ptr, dsa_format, call_addr*)
Call CEEEVnnn (7, 4, *dsaptr, cibptr, caaptr, fc, entry_ptr, dsa_format, call_addr*)
Call CEEEVnnn (7, 5, *dsaptr, cibptr, caaptr, fc, entry_ptr, dsa_format, call_addr*)
Call CEEEVnnn (7, 6, *caaptr, fc*)
Call CEEEVnnn (7, 7, *caaptr, fc*)
Call CEEEVnnn (7, 8, *edbptr, fc*)
Call CEEEVnnn (7, 9, *edbptr, fc*)
Call CEEEVnnn (7, 10, *edbptr, fc, caaptr*)
Call CEEEVnnn (7, 11, *edbptr, fc, caaptr*)
Call CEEEVnnn (7, 12, *edbptr, fc, caaptr*)
Call CEEEVnnn (7, 13, *pcbptr, fc*)
Call CEEEVnnn (7, 14, *pcbptr, fc*)
Call CEEEVnnn (7, 15, *edbptr, fc*)
Call CEEEVnnn (7, 16, *edbptr, fc*)
Call CEEEVnnn (7, 17, *fc*)
Call CEEEVnnn (7, 18, *dsaptr, cibptr, caaptr, fc, entry_ptr, dsa_format, call_addr*)

dsaptr **(input)**
A fullword binary integer containing the address of a DSA.

cibptr **(input)**
A fullword binary integer containing the address of the CIB for the routine. This parameter is zero if the routine does not have a CIB.

caaptr **(input)**
A fullword binary integer containing the address of a CAA.

edbptr **(input)**
A fullword binary integer containing the address of an EDB.

pcbptr **(input)**
A fullword binary integer containing the address of a PCB.

fc **(output)**
A 12-byte feedback code passed by reference. The following symbolic conditions might result from this exit:

CEE000	Severity	0
	Msg_No	N/A
	Message	The service completed successfully.
CEE30V	Severity	3
	Msg_No	3103
	Message	An error occurred in writing messages to the dump file.

CEE311	Severity	3
	Msg_No	3105
	Message	Member language dump exit was unsuccessful.

entry_ptr **(input)**
A fullword pointer containing the address of the entry point for the routine that owns the stack frame.

dsa_format **(input)**
A fullword binary integer set to one of the following:
0 The format of the DSA is a Standard OS Linkage register save area (with/without Language Environment fields including NAB).
1 The format of the DSA is XPLINK style.

call_addr **(input)**
A fullword pointer containing the address of the instruction that caused transfer out of the routine that owns the stack frame. If the calling instruction cannot be determined, then the value is zero. This is either the address of the BASR, BALR or BASSM instruction if transfer was made by a subroutine call or the address of the interrupted statement if the transfer was caused by an exception.

Event Code 8 — New Load Module Event

This event notifies the members that a new executable program (load module or program object) was introduced to the enclave. This function is intended to be used when a high level language performs a dynamic call. It is also used when a DLL is first loaded, either by an explicit reference (for example, by using the C dllload() function) or by an implicit reference.

Syntax

Call CEEEVnnn (8, *entry_ptr, ceestart_ptr, idinfo, wsa, loadinfo*)

```
POINTER   *entry_ptr;
POINTER   *ceestart_ptr;
INT4      *idinfo;
POINTER   *wsa;
POINTER   *loadinfo;
```

entry_ptr **(input)**
Language Environment only recognizes the following *entry_point* styles:
- C/370-style PPA
- Language Environment routine entry layouts (see “Routine Layout” on page 4.)
- Language Environment-format CEESTART
- Language Environment callable service stubs

ceestart_ptr **(input)**
CEESTART, if Language Environment recognized the executable program, or zero if Language Environment did not recognize the executable program.

idinfo **(input)**
A fullword that gives the member language additional information about the calling environment. A new executable program is introduced into the enclave by a COBOL dynamic call, PL/I or C/C++ fetch, CEEPIPI services, and DLL implicit or explicit load. The following bits are defined:

Bits	Description
0–23	Reserved

24–31 Load_reason. The following values indicate the reason the executable program was loaded:

1 The program was loaded because of a dynamic call, fetch, or CEEPIPI service. In this case, Language Environment does not preserve the writable static area (WSA) address because each of the members has defined ILC interfaces to support usage of the WSA, as required by the member languages. For example, a C/C++ fetch() call will obtain a WSA for every request, while a COBOL dynamic call will obtain a WSA area only for the first request.

2 The program was loaded due to the explicit or implicit reference of a DLL. The member should be obtained and fully-initialize the WSA. Language Environment will preserve the WSA address that is returned by the member to complete the initialization required before making a DLL available for use by the requesting DLL application.

wsa **(input/output)**
A fullword that contains the address of the WSA that was obtained and initialized by the member. If the *idinfo* indicates that the executable unit is a DLL, Language Environment will save the WSA and provide it to the DLL when the DLL is invoked.

This parameter is initially set to zero when it is passed to a member language's event handler. It will contain the WSA address on subsequent calls when the WSA address is return by a member language.

loadinfo **(output)**
A fullword that will be passed as input to the DLL Initialization (22) and Static Constructor (25) events. It can be used to pass information to these events about the module that was just loaded.

Event Code 9 — New Condition Event

This event notifies all members that a new condition is about to be processed. This can be used by members to keep sets of condition handling related control areas concurrently with Language Environment condition handling.

Syntax

Call CEEEVnnn (9, *function_code, cib_ptr*)

```
INT4      *function_code;
POINTER   *cib_ptr;
```

function_code **(input)**
A 31-bit fixed-binary field that describes the action that is being reported.

Value	Meaning
1	A new CIB is ready for processing.
2	An old CIB is collapsing.

cib_ptr **(input)**
A pointer to the new or old CIB.

Usage Notes:

1. The notification of the event handlers occurs after the condition has been enabled. This is done prior to the debug or any other event handler being called to process the new condition.
2. The CIBs are treated as a stack. Even if CIBs go away due to move resume cursor this event notifies the members of the collapsing of the CIBs in LIFO order.
3. If the event handler indicates an unrecoverable error with a 16 return code, condition management issues ABEND U4091-14.
4. The CIB address can only be used as a token for the purpose of identifying which condition is ready for processing or is collapsing.

Event Code 10 — Resume from a Condition Handler Event

This event code identifies that a resumption from a condition handler occurs within the *target_dsa*.

Syntax

Call CEEEVnnn (10, *target_dsa, target_dsa_fmt, ph_callee_dsa, ph_callee_dsa_fmt*)

```
void       *target_dsa;
INT4       *target_dsa_fmt;
void       *ph_callee_dsa;
INT4       *ph_callee_dsa_fmt;
```

target_dsa **(input)**
The DSA that is the target for the resume.

target_dsa_fmt **(input)**
The format of the DSA pointed to by *target_dsa*. Possible values are:
0 non-XPLINK
1 XPLINK

ph_callee_dsa **(input)**
A pointer to the DSA of the routine called by the routine owning the DSA pointed to by *target_dsa*.

ph_callee_dsa_fmt **(input)**
The format of the DSA pointed to by *ph_callee_dsa*. Possible values are:
0 non-XPLINK
1 XPLINK

Usage Notes:

1. The Language Environment condition manager determines the member that owns the stack frame that is the target of the resume. Once determined, Language Environment condition manager calls the particular member's event handler just prior to performing the resume operation into the stack frame.
2. It is the member's responsibility to perform the necessary actions to allow the resume to occur within the *target_dsa*.
3. The *ph_callee_dsa* parameter is provided in case the event handler needs to extract registers from the DSA pointed to by *target_dsa*. Registers which are saved in the DSA pointed to by *target_dsa* for non-XPLINK are mostly saved in the DSA pointed to by *ph_callee_dsa*, if *target_dsa_fmt* is XPLINK. Note that *ph_callee_dsa_fmt* might not be the same as *target_dsa_fmt*. Also, the DSA pointed to by *ph_callee_dsa* may belong to a Language Environment transition or Language Environment overflow routine.

Event Code 11 — DSA Exit Routines Event

An exit routine can be used to perform activities on behalf of a stack frame when the stack is being collapsed as the result of a return from a main, an immediate STOP request, a GOTO out of block, or a move resume cursor request.

Exit routines allow for activities such as the closing of files and releasing of system resources that are held.

Members not requiring Exit DSAs may, for performance reasons, request that this processing be disabled. This applies to normal, or non-abend, enclave terminations initiated by a call to the CEETREN or CEETREC services. This is implemented with a parameter used on the Enclave Initialization Event, Event Code 18. Refer to this event for more information on enabling this feature. When this feature is on, the traverse of the stack for exit DSA routines is not executed and the DSA Exit event call is skipped. If multiple language members are present in an enclave, all must indicate that the DSA Exit scan may be skipped. Stack traverse and DSA Exit processing continues to occur for terminations with an abend pending or a GOTO out of block or move resume cursor request whether the feature is enabled or not.

An exit routine is established in one of two mechanisms, as described below.

1. The stack frame (DSA) is marked as requiring DSA exit processing by flags set within the DSA.
2. The PPA1 has the exit DSA flag on.

The exit routine has two different interfaces depending upon the mechanism used to establish the exit.

Syntax

Call CEEEVnnn *(11, dsa_addr, dsa_fmt, ph_callee_dsa_addr, ph_callee_dsa_fmt)*

```
POINTER    *dsa_addr;
INT4       *dsa_fmt;
POINTER    *ph_callee_dsa_addr;
INT4       *ph_callee_dsa_fmt;
```

dsa_addr **(input)**
The address of the DSA that is being abnormally collapsed (nonreturn style).

dsa_fmt **(input)**
The format of the DSA pointed to by *dsa_addr*. Possible values are:
0 non-XPLINK
1 XPLINK

ph_callee_dsa_addr **(input)**
A pointer to the DSA of the routine called by the routine owning the DSA pointed to by *dsa_addr*.

ph_callee_dsa_fmt **(input)**
The format of the DSA pointed to by *ph_callee_dsa_addr*. Possible values are:
0 non-XPLINK
1 XPLINK

Usage Notes:

1. The HLL event handler is called with the event code 11 and the address of the stack frame that is being popped off the stack.

2. If conditions arise while running they should be signaled to the Language Environment condition manager.
3. No condition token is provided to the exit routine. It is assumed that the exit routine completed without error whenever it returns to the Language Environment condition manager.
4. The *ph_callee_dsa_addr* parameter is provided in case the event handler needs to extract registers from the DSA pointed to by *dsa_addr*. Registers which are saved in the DSA pointed to by *dsa_addr* for non-XPLINK are mostly saved in the DSA pointed to by *ph_callee_dsa_addr*, if *dsa_fmt* is XPLINK Note that *ph_callee_dsa_fmt* might not be the same as *dsa_fmt*. Also, the DSA pointed to by *ph_callee_dsa_addr* may belong to a Language Environment transition or Language Environment overflow routine.

Event Code 12 — National Language Change Event

This event notifies all members that the national language has been changed using Language Environment callable services.

Syntax

Call CEEEVnnn (12, *nat_lang*)

```
INT       *nat_lang;
```

nat_lang **(input)**
The new national language (character(3)). For a list of supported national languages, see *z/OS Language Environment Programming Reference*.

Note: The members are notified before the options control block is updated.

Event Code 13 — Country Code Change Event

This event notifies all members that the country code has been changed using Language Environment callable services.

Syntax

Call CEEEVnnn (13, *country_code*)

```
INT       *country_code;
```

country_code **(input)**
The new country code (character(2)). For a list of supported country codes, see *z/OS Language Environment Programming Reference*.

Note: The members are notified before the options control block is updated.

Event Code 14 — Main Routine Invocation Event

This event is called in both CICS and non-CICS environments to allow the member language to invoke the main program and handle normal return from the main program. This event allows member languages to apply language-specific semantics for main programs in cases where the language library does not gain control before Language Environment during initialization. This occurs in non-CICS environments when the environment is initialized by CEESTART, and is always the case in CICS environments.

Syntax

Call CEEEVnnn (14, *mainaddr, amode, mainopts, apal*)

```
POINTER   *mainaddr;
INT       *amode;
INT       *mainopts;
POINTER   *apal;
```

mainaddr **(input)**
The address of the main routine found either in CEEMAIN/PLIMAIN when CEESTART entered directly, or the PIPI table address when initialized through CEEPIPI (init_main) or the main address from the INPL or the alternate main in the EPL when being invoked through CEEP#CAL.

amode **(input)**
An AMODE indicator for the main program. This is a fullword with the amode in the least significant bit.

mainopts **(input)**
The main options word from the INPL.

apal **(input)**
The R1 value to be passed to the main routine. When CEESTART is executed directly, this is determined by either the call to CEECELVBPLST, the PLIST manipulation CWI, or CEEEDBDEFPLPTR field in the EDB. When starting execution from a CEEPIPI (call_main) function, this is the parm_pointer in the CEEPIPI parameter list. When starting execution from a CEEP#CAL function, this is the PLIST from the EPL.

Usage Notes:

1. This event is called in both CICS and non-CICS environments.
2. Language Environment allocates a DSA in order to call the MAIN routine.
3. The member event handler must perform any AMODE switching required to invoke the MAIN routine.
4. When control returns from this event, Language Environment performs termination activities similar CEETREN.
5. This call is made for CICS when the *invoke* parameter of the Enclave Initialization event (see topic 466) was set to 1 by the language event handler for the language of the main, or when the *maininv_on* flag in INPL word 7 is set.
6. This call is made for non-CICS when the *maininv_on* flag in INPL word 7 is set.
7. Under CICS, the return code from the application program should be placed in CEECAACICSRSN before returning from this event.
8. CICS SPF: Language Environment calls languages in the application key for this event. This key can be key 8 or key 9, depending on the EXECKEY setting for the application program in the PPT.
9. CICS SPF: The parameters and storage areas pointed to by the parameters can potentially be in key 8 storage, with the exception of the *apal* parameter, which is in the application key.

Event Code 15 — Atterm Event

The atterm event is called during termination of an enclave. It is called after all user stack frames have been removed from the stack and prior to calling the members for the enclave termination event. Only the members that have been explicitly registered using the CWI CEEATTRM are called.

Syntax

Call CEEEVnnn (15)

The parameter list that is passed to this event consists of a single parameter, the event code 15.

Note: For more information on Language Environment return codes, reason codes, existing language semantics, processing, and conventions, see *z/OS Language Environment Debugging Guide*.

Event Code 16 — Debug Tool Event

The Debug Tool event code is reserved for calls from member event handlers to the debugger. For more information, see the documentation supplied with the debugger.

Event Code 17 — Process Initialization Event

Perform language-specific process initialization.

Syntax

Call CEEEVnnn (17, *reuse_state*)

```
INT     *reuse_state;
```

reuse_state **(input)**

One of the following codes, which indicate if library reuse is active and if this is the first time in the current reuse environment that the event handler is called for process initialization.

0 Reuse is not in effect.
1 Reuse is in effect; this is the first call for process initialization.
2 Reuse is in effect; this is not the first call for process initialization.

Upon entry into the member event handler, the following is available:

- R13 points to a DSA into which the event handler is able to store its caller's registers.
- R12 is pointing to a simulated CAA allowing stack frame acquisition.
- A fixed size stack is available for use by the HLLs when called for process initialization. The stack size is 1024 bytes. There is no stack overflow support.
- The simulated CAA has a pointer to the PCB. The simulated CAA has a zero pointer to the EDB.
- R1 contains the address of a standard O/S style PLIST with a single parameter of event code 17.
- The addresses of LOAD and DELETE services and GETMAIN/FREEMAIN services are held in the PCB. It is the caller's responsibility to relinquish resources obtained at the process level.
- The format of the member list at the process level is of the same format as the member list at the enclave level.

This event is driven during preinitialization for main routines when the environment is being brought up during an INIT request. Application-specific initialization is left until a main routine is about to be called at a CALL request (see topic 466). The

members that are called with this event code are found by looking into the load modules that are passed in the PIPI table.

When library reuse is active, the specified *reuse_state* value indicates if this is the first process event call to a given member during the current reuse environment. In the reuse environment, Language Environment does not free the initial storage allocated for Language Environment control blocks or delete Language Environment modules or member event handlers between invocations of Language Environment-enabled programs. Library reuse will be active if a program uses LRR (Library Retention Routine) or if it is a medium-weight POSIX process.

At termination, all resources obtained through the service routine vector during process initialization **must** be released explicitly. Language Environment does not implicitly release any resource obtained during the process initialization event.

A combination of Event 17 and Event 18 should initialize the HLL specific aspects of the environment for a given application.

The counterpart for this event is event 21.

Usage Notes:

1. This event is called in both CICS and non-CICS environments.
2. This event is called at most once during the execution of a CICS transaction. Member languages should initialize for the transaction during this call.
3. This event is always called before enclave initialization for a member language. However, enclave initialization for other languages can precede process initialization for a language, if a subordinate enclave introduces a new language into the process.
4. CICS SPF: Language Environment calls languages in key 8 for this event. Storage for parameters can be in key 8.

Event Code 18 — Enclave Initialization Event

Perform language-specific enclave initialization. All language-specific initialization for the CICS run unit should be performed during this call.

Syntax

Call CEEEVnnn (18, *pgmmask, inpl, invoke, ioinfo, tolerate_newstk, idinfo, wsa, skipedsa*)

```
INT4      *pgmmask;
POINTER   *inpl;
INT4       invoke;
STRUCT     ioinfo;
INT4      *tolerate_newstk;
INT4      *idinfo;
POINTER   *wsa;
INT4      *skipedsa;
```

pgmmask **(input/output)**
A fullword containing the program mask in the right-most bits.

inpl **(input)**
The initialization parameter list for the enclave.

invoke **(output/CICS only)**
A fullword that is set to indicate that Language Environment should call the member language to invoke the main procedure:

0 Language Environment should invoke the main procedure directly.
1 Language Environment should give control to the member language to invoke the main procedure.

This parameter is initially set to zero and is used only under CICS. This parameter is only recognized for the member language whose main procedure is written in that language.

ioinfo **(input/CICS only)**
A structure describing the standard input, output, and error streams as defined by CICS. This parameter is only valid under CICS.

tolerate_newstk **(input)**
A fullword that indicates if the member language can support the performance enhancements to the stack extension routines.

This parameter is initially set to zero when passed to the member language event handler. If the member language can tolerate the high-performance stack behavior, it should set this word to a nonzero value. If not, it should leave the value as zero. On return from the member event handler, Language Environment queries the value of the parameter and uses the appropriate stack handling code.

idinfo **(input)**
A fullword that indicates to the member language additional information that identifies the calling environment. Language Environment issues the enclave initialization event when a new common run-time environment is created for the set of members represented in an executable program and when an established environment needs to be augmented by adding additional members represented in a newly-loaded executable program. The following bits are defined:

Bits **Description**
0–7 Init_reason

The following values indicate the reason for the enclave initialization event.
1 The initial build of the Language Environment. The reasons for this include: batch initialization, initialization for CEEPIPI, creation of nested enclave, and CICS run-unit initialization.
2 The Language Environment was previously built and additional members need to be added to the existing environment. The reasons for this include: the dynamic call, fetch, adding routines to the CEEPIPI environment, or DLL load module which caused a load of an executable program that contains members that are new to the environment. In this case, event code 8 (see “Event Code 8 — New Load Module Event” on page 459) will follow to allow the member to obtain and initialize the WSA. Because event code 8 is always provided and event code 18 is only provided when new members are introduced into the environment, the WSA should be obtained once using event code 8.

8–15 dll_type

This value indicates if the executable program is a DLL; the values are defined as follows:
0 The executable program is **not** a DLL; it is either a load module or a program object.

1 The executable program is a DLL. This means it can export variables, functions, or both; optionally, the DLL can also import variables or functions.

17–31 Reserved; must be zero

wsa **(input/output)**
A fullword that contains the address of the member-obtained and initialized WSA. If *idinfo* indicates that the executable program is a DLL, Language Environment will save the WSA address and provide it to the DLL when the DLL is invoked.

skipedsa **(output)**
A fullword that indicates whether DSA Exit processing may be bypassed at normal, non-abend pending, enclave termination initiated by a call from the CEETREN or CEETREC services. The default is zero, which indicates DSA Exit processing should occur as previously at enclave termination. The member sets this fullword to a non-zero value to indicate it has no requirement for Exit DSA processing at normal enclave termination.

This event is used to initialize HLL portions at the enclave level. The order in which the member event handlers are driven is first based on the ascending order of the member ID. However, if the member ID is identified by a numerically lower ID in the dependencies part of the signature CSECT, then it could be called prior to a lower ID.

All Language Environment services are available at the time of this event. The member can influence the program mask setting by placing its requirements of the program mask in the second parameter as described below.

Upon entry into the member event handler for the enclave initialization event, the following is available:

- R1 contains the address of a standard O/S style PLIST (all of the parameters are passed by reference) with the following PLIST:
  1. Event code 18.
  2. Fullword field in which the program mask is held in the right-most bits; upon input, this field is zero.
  3. Initialization PLIST (INPL) passed to CEEINT.
  4. Fullword indicating how Language Environment should call the member language to invoke a main procedure; this parameter is initially set to zero.
  5. Structure describing the standard input, output, and error streams as defined by CICS.
  6. Fullword indicating whether the member language can support performance enhancements to the stack extension routines. This parameter is initially set to zero.
  7. Fullword that indicates to the member language additional information to identify the calling environment.
  8. Fullword that contains the address of the WSA that was obtained and initialized by the member.
  9. Fullword indicating whether the member language wishes to skip the Exit DSA scan at normal termination. This parameter is initially set to zero.
- R12 addresses the CAA
- R13 addresses a DSA
- R14, R15 are linkage registers

In the preinitialized interface, this event is driven for main routines to complete initialization for a specific application running within an enclave. This event occurs during the CALL request for main routines to allow HLLs complete their initialization for a particular application or for a particular run of an application.

The combination of Event 17 and Event 18 should initialize the HLL specific aspects of the environment for a given application.

All callable services except CEE3CRE are available during event 18. Stack storage is available.

The counterpart for this event is Event 19.

Usage Notes:

1. This event is called in CICS and non-CICS environments.
2. CICS SPF: Language Environment calls languages in key 8 for this event. Storage for parameters can be in key 8.

Event Code 19 — Enclave Termination Event

Perform language-specific enclave termination.

Syntax

Call CEEEVnnn (19, *inpl*)

```
POINTER   *inpl;
```

inpl **(input)**

The initialization parameter list for the enclave. Because the member ERTLI run unit termination call is no longer being made, the member languages should terminate for the run unit during this call.

This event is used to terminate HLL portions at the enclave level. The order in which the member event handlers are called is in the reverse order of initialization. The dependencies are determined from the signature CSECTs. For more information, see “Signature CSECT” on page 139. Upon entry into the member event handler, the following is available:

- R1 contains the address of a standard O/S style PLIST (all of the parameters are passed by reference) with the PLIST consisting of the following:
  - An **event code** indicating enclave termination 19
  - The initialization parameter list that was passed to CEEINT during Language Environment initialization. The initialization parameter list is described in topic 146. It is assumed to be a **read-only** parameter list. Also, the member-defined field which directly follows the owning member ID, must be used only by the owning member.
- R12 addresses the CAA
- R13 addresses a DSA
- R14, R15 are linkage registers

This call allows the HLL to semantically terminate the application by enforcing the language semantics of a terminating enclave. Enclave-related resources should be released.

In the preinitialization interface, this event is driven for applications that run as main routines for the CALL request.

Enclave Termination Event

This event is the counterpart of Event 18.

Usage Notes:

1. This event is called in both CICS and non-CICS environments.
2. CICS SPF: Language Environment calls languages in key 8 for this event. Storage for parameters can be in key 8.

Event Code 20 — Query/Build Feedback Code Event

The Query/Build event handler is used to convert 12-byte character strings to condition tokens and condition tokens to 12-byte character strings.

Syntax

Call CEEEVnnn (20, *function_code, additional_parms, ownership*)

```
INT4      *function code;
INT2      *cond_name;
CHARn     *cond_token;
INT4      *ownership;
```

function_code **(input)**
Defines if this event is a query or build function. The functions are defined as follows:
1 Fixed-binary(31) indicating query feedback token event
2 Fixed-binary(31) indicating build feedback token event

additional_parms **(input/output)**
Parameters specific to a certain function code. The following parameters are for each function code:

Syntax by Function Code

Call CEEEVnnn (20, 1, *cond_name, cond_token, ownership*)

Call CEEEVnnn (20, 2, *cond_token, cond_name, ownership*)

cond_name **(input/output)**
A halfword-prefixed character string symbolic condition name.

cond_token **(input/output)**
A 12-byte condition token that is constructed from the symbolic name. The I_S_Info field is set to binary zero.

ownership **(input)**
Fixed-binary(31) set to contain
0 This member does not recognize this cond_name
1 For query, this member recognizes this cond_name and has filled in the *cond_token*. For build, this member recognizes this cond_token and has filled in the *cond_name*.

Usage Notes:

1. If the condition token is unrecognized, the value of *cond_token* is undefined.
2. Language Environment recognizes only those *cond_name*s that start with cel; and have a corresponding message within the Language Environment message set. If Language Environment does not recognize the cond_name, then all of the active members are invoked by the event handlers polling each member until one claims the *cond_name* returning the *cond_token*. Each member can

validate if the condition token exists within their message set by the CEEGETFB CWI. If the *cond_name* remains unclaimed, the appropriate feedback code is returned.

Event Code 21 — Process Termination Event

Event code 21 performs language-specific process termination.

Syntax

Call CEEEVnnn (21, *reuse_participant*)

```
INT      *reuse_participant;
```

reuse_participant
: Indicates if the member participates in library reuse; a value of 1 indicates participation.

This event is used to terminate HLL portions at the process level. The order in which the member event handlers are called is undefined. In particular, the dependency list is not honored. Upon entry into the member event handler, the following is available:

- R13 points to a DSA into which the event handler is able to store its caller's registers.
- R12 is pointing to a simulated CAA allowing stack frame acquisition.
- A fixed size stack is available for use by the HLLs when called for process initialization. The stack size is 1024 bytes. There is no stack overflow support.
- The simulated CAA has a pointer to the PCB. The simulated CAA has a zero pointer to the EDB.
- The addresses of LOAD and DELETE services and GETMAIN/FREEMAIN services are held in the PCB. It is the caller's responsibility to relinquish resources obtained at the process level.
- The format of the member list at the process level is of the same format as the member list at the enclave level.
- The CEERCB_REUSE_STATE field, which indicates the state of library reuse and had one of the following values:
  0 Reuse is not in effect
  1 or 2 Reuse is in effect.
  3 The reuse environment is terminating.

The PLIST is an OS-style PLIST containing the single parameter of the event code for process termination.

At termination, all resources obtained at the process level MUST be released explicitly. Language Environment does not implicitly release any resource obtained at the process level. (Do not depend upon the resource persisting, even if the resource was not explicitly released.)

During preinitialization, this event indicates that the HLL should relinquish all resources maintained at the process level. Note all HLL semantics for a terminating application has already been accomplished by event 20 enclave termination event. This event is driven for a preinitialization TERM request for a main application.

The counterpart for this event is event 17 (see "Event Code 17 — Process Initialization Event" on page 465).

Usage Notes:

1. This event is called in both CICS and non-CICS environments.
2. This event is called only if process initialization was called.
3. In CICS, this event is called during transaction termination. Member languages should terminate for the transaction during this call.
4. CICS SPF: Language Environment calls languages in key 8 for this event. Storage for parameters can be in key 8.
5. Members must set the *reuse_participant* parameter to 1 if they participate in library reuse and need to be called for final process termination when the reuse environment terminates.

Event Code 22 — DLL Initialization Event

This event is designed to be used by languages with Dynamic Link Libraries (DLLs) to perform initialization specific to the use of those DLLs. The event is driven during Language Environment enclave initialization, after the debugger initialization events but prior to the invocation of the main routine. The event is also driven by Language Environment whenever a new module has been loaded, immediately following the invocation of the New Load Module Event (8). In all cases, this event will be followed by a call to the Static Constructor Event (25).

Syntax

Call CEEEVnnn (22, *idinfo, loadinfo*)

```
INT4      *idinfo;
INT4      *loadinfo;
```

idinfo **(input)**

A fullword that indicates to the member language additional information identifying the calling environment. A new executable unit (load module or program object) is introduced to the enclave by COBOL dynamic call, PL/1 or C fetch, CEEPIPI services, or DLL implicit or explicit load.

The following bits are defined:

bits	description
0 - 23	reserved
24 - 31	load_reason

The value indicates the reason for the load. The values are defined as follows:

value	reason
0	The load was due to main Language Environment initialization.
1	The load was due to dynamic call, fetch, or ceepipi service.
2	The load was due to the explicit or implicit reference of a DLL.

loadinfo **(input/output)**

A fullword returned from the New Load Module (8) event containing information about the module that was just loaded. If this event is being called as part of main Language Environment initialization flow (load_reason is zero), then the New Load Module event was not called and loadinfo is zero. It can optionally be modified by this event for use by the subsequent call to the Static Object Constructor event.

A return code is placed in R15 by the Event Handler. The following return codes are defined:

-4 The Event Handler does not want to process the event.
0 The Event Handler was successful.
16 The Event Handler encountered an unrecoverable error.

Event Code 23 — Stack Frame Zero Processing Event

Calls the condition handler identified by the CEEHDHDL CWI. For information on registering a stack frame zero condition handler, see “CEEHDHDL — Register an Event Handler for Stack Frame Zero Processing” on page 254.

Syntax

Call CEEEVnnn (23, *ceecib, results, new_condition*)

```
void     *ceecib;
INT4     *results;
FEEDBACK *new_condition;
```

ceecib **(input)**
The CEECIB for which the condition handler is being called. This value is passed by reference. Part of the CEECIB is the condition_token and the machine environment for the procedure in which the condition occurred. (For more details, see “Language Environment Condition Information Block” on page 264.)

results **(output)**
The field that contains the instructions indicating the actions the language-specific handler wants the Language Environment condition manager to take as a result of processing the condition. This field is passed by reference. The following are valid responses:

resume	10	Resume at the resume cursor (condition has been handled).
percolate	20	Percolate to the next condition handler.
	21	Percolate to the first user condition handler for the next stack frame. (This can skip a language-specific exception handler for this stack frame as well as the remaining user condition handlers in the queue at this stack frame.)
	23	To force CEL default condition handling for the unhandled condition when condition was signaled from CEESGL callable service with a feedback code.
promote	30	Promote to the next condition handler.
	31	Promote to the next stack frame. (This can skip a language-specific exception handler for this stack frame as well as any remaining user condition handlers in the queue at this stack frame.)
	33	Promote and restart condition handling for the first condition handler for the stack frame denoted by the resume cursor location.
enablement	40	Ignore the condition; the thread is resumed where interrupted.
	41	Enable the condition for condition handling.
	42	Enable the condition and transform the condition (using the *new_condition* parameter).

percolate enablement	50	Percolate the enablement to the calling stack frame.
	51	Transform the condition (using the *new_condition* parameter) and percolate the enablement to the calling stack frame.

new_condition **(output)**
The new condition token representing the promoted condition. This field is used only for *result* values that denote *promote*.

Usage Notes:

1. For a description of the calling method, see “Language Environment Member List and Event Handler” on page 74.
2. It is invalid to promote a condition without returning a new condition token. If the original condition is returned in *new_condition*, the condition manager acts as if a *result* of 20 had been specified.
3. Prior to a condition being promoted, the MIB must be populated with the new inserts for the promoted condition if necessary.
4. The language-specific handlers are automatically established by stack frame. The Language Environment condition manager determines the language associated with a given stack frame, and then calls the event handler with the appropriate event code for enablement, condition handling, or condition handling for stack frame zero.
5. The language-specific handlers are automatically disestablished when the stack frame is popped off the stack either using a return, a GOTO out of block, or moving the resume cursor.
6. If a *resume* is requested, the member that owns the target stack frame is called immediately prior to passing control to the target stack frame. For details, see “Event Code 10 — Resume from a Condition Handler Event” on page 461.
7. CICS SPF: Language Environment calls languages in key 8 for this event.

Event Code 24 — POSIX Events Event

The event handler is a member supplied routine that is invoked at various times throughout the execution of a program when an event had occurred. The address of each member’s event handler is held in the Language Environment member list, in the third word of the appropriate member’s block.

During Language Environment initialization, Language Environment loads CEEEVxxx, where xxx is the member number, if there is a corresponding signature CSECT in the load module. Language Environment saves this address in the appropriate slot in the member list.

Linkage to the member event handler is by BALR 14,15, and R1 contains the address of a standard parameter address list. The first parameter always indicates the type of event for which the event handler has been called. Additional parameters are dependent upon the specific event.

With the introduction of POSIX support, a new event code has been added to the existing set of event codes to identify various POSIX-related events that occur during the execution of the application. An accompanying function code, or event sub-code, uniquely identifies the POSIX event.

Syntax

Call CEEEVnnn *(24, function_code, additional_parms)*

```
INT4       *function_code;
POINTER    *ppsd_addr;
INT        *dsa_fmt;
POINTER    *valid_interrupt_dsa;
POINTER    *caa_copy_addr;
```

function_code **(input)**

Each of the POSIX-related events are discussed below:

1 POSIX fork() notification.

This event is invoked prior to requesting the kernel to fork a new process. It gives the members the opportunity to indicate if they can tolerate a fork() request. Toleration is indicated by setting R15 to zero. If the member cannot tolerate a fork(), R15 is set to -4. If there is one member in the application that cannot tolerate the fork(), the request to fork is denied.

2 POSIX fork() in child.

This event allows the members in the newly-forked child process to refresh their control blocks prior to the application code gaining control.

3 POSIX asynchronous signal.

This event is invoked when an asynchronous signal is received on a particular thread. The BPXYPPSD contains the information regarding the action to take for the specific signal. It is the responsibility of the member to either terminate the application or to resume at the next sequential instruction following the point of interrupt.

4 POSIX thread initialization.

This event is driven on the newly created thread with a new CAA. A **copy** of the parent thread's CAA is passed to the event handler. This allows selective inheriting/copying of fields from the parent's CAA into the new CAA addressed by R12. Note there is no guarantee that the parent thread exists at the time of this event. It is the member's responsibility to access only those pointers that do not cause a reference to freed storage.

5 POSIX thread termination.

This event offers the members the opportunity to clean up any thread related resource that was allocated.

6 POSIX process initialization.

This event is driven for POSIX(ON) applications under the Initial Process Thread (IPT). The POSIX environment has been initialized and all POSIX services are available. This event is driven after the Language Environment process initialization and after Language Environment enclave initialization.

7 POSIX process termination.

This event is driven on the thread that requested termination, and not necessarily on the IPT. All threads have been terminated except the one driving this event. All POSIX functions are available. However, the use

pthread_create() is restricted. This event is driven prior to the Language Environment enclave termination event. The intent of this event is to allow the cleanup of POSIX-related resources for the POSIX process.

By contrast, the Language Environment enclave termination event is always driven on the IPT to allow z/OS-related resources to be released. The POSIX environment has been terminated when this event is invoked and the POSIX flag in the EDB has been turned off.

additional_parms **(input)**
Parameters specific to a certain function code. The following diagram shows the parameters for each event.

Syntax by Function Code

```
Call CEEEVnnn  (24, 1)
Call CEEEVnnn  (24, 2)
Call CEEEVnnn  (24, 3, ppsd_ptr, dsa_fmt, valid_interrupt_dsa)
Call CEEEVnnn  (24, 4, caa_copy_addr)
Call CEEEVnnn  (24, 5)
Call CEEEVnnn  (24, 6)
Call CEEEVnnn  (24, 7)
```

ppsd_addr **(input)**
A fullword binary integer containing the address of the BPXYPPSD, which is an z/OS UNIX control block. For a description of the fields in the BPXYPPSD, see *z/OS UNIX System Services Programming: Assembler Callable Services Reference*.

dsa_fmt **(input)**
The format of the active DSA when the signal was received. This DSA is pointed to by register 4 or 13 saved in the PPSD pointed to by *ppsd_ptr*. Possible values for *dsa_fmt* are:
0 non-XPLINK
1 XPLINK

valid_interrupt_dsa **(input)**
This is a pointer to the valid DSA that was used to expand the Language Environment stack from when the member event 24 handler was called. This may differ from the value in PPSD register 4 or 13. This value should be passed through to CEE3RSUM (in the *valid_interrupt_dsa* field in the CEE3RSUM resume information area) when resuming the user application after handling the signal.

caa_copy_addr **(input)**
A fullword binary integer containing the address of the copy of the parent's CAA.

Return Codes from Event Code 24

A return code is placed in R15 by the event handler. The following return codes are defined:
-4 Event handler does not want to process the event
0 Event handler was successful
16 Event handler encountered an unrecoverable error

Typically, all Language Environment services are available during the handling of the event, including the stack and heap.

Event Code 25 — Static Object Constructor Event

Constructors and destructors are not resources, but are routines that are executed during the creation and destruction of application variables. Application variables can be static, automatic, or dynamic. Automatic variables are thread resources. The invocation of constructors and destructors for those variables is performed by each thread. Static variables and dynamic variables are enclave resources, so the constructors and destructors are executed once for the creation/destruction of each static and dynamic variable in the enclave.

Constructors and destructors for automatic and dynamic variables are driven by the languages libraries or compiled code, without specific support from Language Environment. Constructors and destructors for static variables are driven by language libraries from within the static constructor and static destructor events.

The static object constructor lets a member gain control to perform constructor initialization prior to the invocation of the main routine. CEECONST is a CWI, called by member languages from their the enclave initialization event logic, to register the member to gain control, by the member event handler, for two events:
1. Static constructor event (event code 25)
2. Static destructor event (event code 36)

By requiring member languages to register for these events, the overhead of the event calls is avoided for member languages that do not need the event.

Syntax

void CEECONST (*fc*)

```
FEED_BACK *fc;
```

fc **(output)**
A 12-byte feedback code that indicates the result of this service. This parameter must be specified. The following symbolic conditions can result from this service:

CEE000	Severity	0
	Msg_No	N/A
	Message	The service completed successfully.
CEE38U	Severity	4
	Msg_No	3358
	Message	The service was invoked outside of the member enclave initialization. No action was taken.

Static Constructor Event

This event is designed to be used by languages with object oriented features to drive constructor functions (initialization methods) for all statically allocated objects. The event is driven during Language Environment enclave initialization, after the debugger initialization events but prior to the invocation of the main routine. The event is also driven by Language Environment whenever a new module has been loaded, immediately following the invocation of the DLL Initialization Event (22).

Syntax

Call CEEEVnnn (25, *idinfo, loadinfo*)

```
INT4      *idinfo;
INT4      *loadinfo;
```

idinfo **(input)**
A fullword that indicates to the member language additional information identifying the calling environment. A new executable unit (load module or program object) is introduced into the enclave by COBOL dynamic call, PL/1 or C fetch, CEEPIPI services, or DLL implicit or explicit load.

The following bits are defined:

bits	description
0 - 23	reserved
24 - 31	load_reason

The value indicates the reason for the load. The values are defined as follows:

value	reason
0	The load was due to main Language Environment initialization.
1	The load was due to dynamic call, fetch, or ceepipi service. In this case, static constructors are run immediately.
2	The load was due to the explicit or implicit reference of a DLL. Static constructors will only be run if they are at the level represented by the initial DLL load (for example, all DLL initialization has been completed).

loadinfo **(input)**
A fullword returned from the New Load Module (8) or DLL Initialization (22) event containing information about the module that was just loaded.

A return code is placed in R15 by the Event Handler. The following return codes are defined:

-4 The Event Handler does not want to process the event.
0 The Event Handler was successful.
16 The Event Handler encountered an unrecoverable error.

Usage Notes:

1. This event is driven only if the member language has registered for static constructor/destructor events by calling the CEECONST CWI during the enclave initialization event.
2. All services of Language Environment are available during this event.
3. Application code may be driven during this event.

Event Code 26 — Region Initialization Event

Perform language-specific initialization that can be shared among all processes in an address space.

Syntax

Call CEEEVnnn (26, *rcbptr, process_permstglen*)

```
POINTER   *rcbptr;
INT       *process_permstglen;
```

rcbptr **(input)**
The address of the Region Control Block (RCB) for the region. The member languages can reference fields of the RCB and reference/set the MEMLDEF field of the region member list anchored off the RCB.

process_permstglen **(output)**
Set by the member language to the amount of permanent process storage that the language requests during process initialization (using the Get Permanent Process Storage macro, CEEXGPPS. This parameter is initially set to zero.

Usage Notes:

1. This event is called in both CICS and non-CICS environments.
2. For CICS, the CICS region defines the address space. Each running Language Environment-enabled transaction in the partition is a process in the region. Other S/370 environments do not support multiple processes in a single address space. However, member language init/term should still be structured as if that were a possibility, to maximize common code between CICS and other environments.
3. Storage for parameters can be in key 8.

Event Code 27 — Region Termination Event

Perform language-specific termination for the region.

Syntax

Call CEEEVnnn (27, *rcbptr*)

```
POINTER   *rcbptr;
```

rcbptr **(input)**
The address of the RCB for the region. The member languages can reference fields of the RCB and reference/set the MEMLDEF field of the Region Member List anchored off the RCB.

Usage Notes:

1. This event is called in both CICS and non-CICS environments.
2. CICS SPF: Language Environment calls languages in key 8 for this event. Storage for parameters can be in key 8.

Event Code 28 — Identify Module Entry Point Event

This event is used to determine the language of the procedure identified as the entry point of the module. Also, if the entry point is a main procedure, then return an INPL, as defined on the CEEINT CWI call. This INPL is used to initialize an enclave in order to invoke the main procedure.

Syntax

Call CEEEVnnn (28, *loadmodptr, entryptr, identified, main, inplptr, loadmodlen*)

```
POINTER   *loadmodptr;
POINTER   *entryptr;
INT4      *identified;
INT4      *main;
POINTER   *inplptr;
INT4      *loadmodlen;
```

loadmodptr **(input)**
The address of the start of the load module.

entryptr **(input)**
The address of the entry point of the load module.

identified **(output)**
A fullword set to one of two values:
0 The procedure is not of the member's language.
1 The procedure is of the member's language.

main **(output)**
A fullword set to one of two values:
0 The procedure is not a main procedure.
1 The procedure is a main procedure.

inplptr **(input/output)**
The address of the INPL to be used to initialize the enclave. Enough storage is provided so that the member can build the INPL within the provided storage, or the member can set the *inplptr* parameter to point to other storage containing the INPL.

loadmodlen **(input)**
A fullword set to the length of the load module.

Usage Notes:

1. This event is called only when running under CICS.
2. If a member event handler detects an error during this event, it should return with return code 16, and place the reason code for the error in CEECAACICSRSN field of the CAA. Language Environment passes this reason code to CICS.
3. If a member event handler detects a non-terminating condition (for example, the INPL cannot be built due to missing csects in the module), it should return with return code 4, and place the reason code for the error in CEECAACICSRSN field of the CAA. Language Environment passes this reason code to CICS and returns control to CICS without further processing.
4. CICS SPF: Language Environment calls languages in key 8 for this event. Storage for parameters can be in key 8.

Event Code 29 — Determine Enclave Work Area Lengths Event

This event is used to determine the amount of permanent enclave storage that a member language requests during enclave initialization for a particular application program. Permanent enclave storage is allocated using the CEEXGPES macro.

Syntax

Call CEEEVnnn (29, *inpl, enclave_permstglen_31, enclave_permstglen_24*)

```
POINTER   *inpl;
INT4      *enclave_permstglen_31;
INT4      *enclave_permstglen_24;
```

inpl **(input)**
The INPL for the enclave. The INPL was either obtained by Language Environment from examining the code at the entry point of the load module or was obtained by the member language of the main procedure using the identify module entry point event code 28.

enclave_permstglen_31 **(output)**
A fullword integer to contain the amount of AMODE 31 storage, in bytes, that the member language needs at the enclave level. If no storage is needed, this parameter should be set to zero.

enclave_permstglen_24 **(output)**
A fullword integer to contain the amount of AMODE 24 storage, in bytes, that the member language needs at the enclave level. If no storage is needed, this parameter should be set to zero.

Usage Notes:

1. This event is called only when running under CICS.
2. If a member event handler detects an error during this event, it should return with return code 16, and place the reason code for the error in CEECAACICSRSN field of the CAA. Language Environment passes this reason code to CICS.
3. CICS SPF: Language Environment calls languages in key 8 for this event. Storage for parameters can be in key 8.

Event Code 31 — Determine Working Storage (CICS only) Event

This event is called in order to determine the address and length of the storage containing local variables for an executing routine.

This information is returned to CICS EDF utility.

Syntax

Call CEEEVnnn (31, *pgmrsa, memwsa, memwsl*)

```
POINTER   *pgmrsa;
POINTER   *memwsa;
INT4      *memwsl;
```

pgmrsa **(input)**
The address of the save area of a routine.

memwsa **(output)**
A fullword to be set to the address of the routine's working storage or DSA. If this cannot be determined, the field should be set to zero.

memwsl **(output)**
A fullword to be set to the length of the routine's working storage or DSA. If this cannot be determined, the field should be set to zero.

Usage Notes:

1. This event is called only when running under CICS.
2. If a member event handler detects an error during this event, it should return with return code 16, and place the reason code for the error in CEECAACICSRSN field of the CAA. Language Environment passes this reason code to CICS.
3. CICS SPF: Language Environment calls languages in key 8 for this event. Storage for parameters can be in key 8.

Event Code 32 — Perform GOTO Validation (CICS only) Event

This event is used to verify with the member language that a GOTO-out-of-block can be performed which transfers control to a location specified on an EXEC CICS HANDLE CONDITION condition (label).

Syntax

Call CEEEVnnn (32, *pgmrsa, xpgmind*)

```
POINTER   *pgmrsa;
INT4      *xpgmind;
```

pgmrsa **(input)**
The address of the save area of a routine that is being exited by a GOTO-out-of-block in order to transfer control to the EXEC CICS HANDLE CONDITION condition (label).

xpgmind **(output)**
A fullword set to indicate if the GOTO-out-of-block is restricted for this routine:
0 The GOTO-out-of-block is allowed.
1 The GOTO-out-of-block is not allowed.

Usage Notes:

1. This event is called only when running under CICS.
2. If a member event handler detects an error during this event, it should return with return code 16, and place the reason code for the error in CEECAACICSRSN field of the CAA. Language Environment passes this reason code to CICS.
3. CICS SPF: Language Environment calls languages in key 8 for this event. Storage for parameters can be in key 8.

Event Code 33 — Member Needs Options Processing Event

This event polls all members to see if quick options can be processed.

Syntax

Call CEEEVnnn (33, *need_opts_processing*)

```
INT4      *need_opts_processing;
```

need_opts_processing **(input)**
A fullword set to indicate if quick options processing can be done.
0 Quick options processing cannot be done.
1 Quick options processing can be done.

Event Code 34 — Command Line Equivalent Event

This event allows a member language to process a command line equivalent string. Run-time options can be changed and the parameter list to pass to the main program can be changed.

Syntax

Call CEEEVnnn (34, *ocb_addr, R1_at_entry, plist*)

```
POINTER   *ocb_addr;
POINTER   *R1_at_entry;
POINTER   *plist;
```

ocb_addr **(input)**
The address of an OCB.

R1_at_entry **(input)**
The R1 value passed to CEEINT.

plist **(output)**
The address of the argument list to be interpreted as the inbound parameter.

Usage Notes:

1. The OCB passed to this event will contain the installation defaults and programmer defaults merged.
2. Only the member identified by the member ID in the INPL is called when the **reqcmdequ** flag in the main options word of the INPL is ON.
3. This event has limited capabilities. There is a fixed stack available and a partially initialized CAA. No Language Environment callable services can be used from this event.
4. Members which change a run-time option should change the corresponding OCB where_set field to PROGRAM_INVOCATION, which will cause the options report to show ″Invocation command″ for that option.
5. Members which support main programs being called with a nonsupported parameter list can use this event to do their own command-line equivalent processing.

Event Code 35 — Default Options Event

The purpose is to allow the members to set default run-time options in a compatible fashion.

Syntax

Call CEEEVnnn (35, *ocb_addr, ceestart_addr, inpl_addr, work_area*)

```
POINTER   *ocb_addr;
POINTER   *ceestart_addr;
POINTER   *inpl_addr;
POINTER   *work_area;
```

ocb_addr **(input)**
The address of an OCB.

ceestart_addr **(input)**
The address of CEESTART.

inpl_addr **(input)**
The address of the initialization parameter list (INPL).

work_area **(input)**
The address of a 512-byte work area.

Usage Notes:

1. The OCB passed to this event will contain the installation defaults.
2. Only the member identified by the member ID in the INPL is called when the **defoptreq** flag in the main options word of the INPL is ON.
3. This event has limited capabilities. There is a fixed stack available and a partially initialized CAA. No Language Environment callable services can be used from this event.
4. Members which set a default option should change the corresponding OCB where_set field to DEFAULT_SETTING, which will cause the options report to show ″Default setting″ for that option.
5. Members which recognize that the application being run needs a specialized set of run-time options can use this event to tailor the default options appropriately.

Event Code 36 — Static Destructor Event

This event is designed to be used by languages with object oriented features to drive destructor functions (uninitialization methods) for all statically allocated objects.

This event is driven during Language Environment enclave termination, after stack collapse, but prior to debugger termination events. This event occurs after the atterm event.

Syntax

void CEEEVnnn (*event_code*)

```
INT4  *event_code = 36;
```

event_code **(input)**
Is a fullword integer with value 36 indicating that this is the static destructor event call.

A return code is placed in R15 by the Event Handler. The following return codes are defined:

-4 The Event Handler does not want to process the event.
0 The Event Handler was successful.
16 The Event Handler encountered an unrecoverable error.

Usage Notes:

1. This event is driven only if the member language has registered for static constructor/destructor events by calling the CEECONST CWI during the enclave initialization event.
2. All services of Language Environment are available during this event.
3. Application code may be driven during this event.

Event Code 37 — Preallocated Storage Event

This event allows user-supplied storage to be used as the initial segment of user stack or user heap storage.

Syntax

Call CEEEVnnn (37, *ocb_addr, R1_at_entry, init_stack_addr, init_stack_len, init_heap_addr, init_heap_len*)

```
POINTER   *ocb_addr;
POINTER   *R1_at_entry;
POINTER   *init_stack_addr;
POINTER   *init_stack_len;
POINTER   *init_heap_addr;
POINTER   *init_heap_len;
```

ocb_addr **(input)**
The address of an OCB.

R1_at_entry **(input)**
The R1 value passed to CEEINT.

init_stack_addr **(output)**
The address of the initial segment of stack storage.

init_stack_len **(output)**
The length of the initial stack segment.

init_heap_addr **(output)**
The address of the initial segment of heap storage.

init_heap_len **(output)**
The length of the initial heap segment.

Usage Notes:

1. Only the member identified by the member ID in the INPL is called when the prealloc flag in the main options word of the INPL is ON.
2. This event has limited capabilities. There is a fixed stack available and a partially initialized CAA. No Language Environment callable services can be used from this event.
3. The output of this event is used for the initial segment only. For the increment segments, location, and disposition of the user stack and user heap storage, the corresponding suboption specifications in the STACK and HEAP run-time options continue to be used.

   Note: If the location specification is BELOW, but the user-supplied storage is above the 16M line, the member is responsible for diagnosis and a return code of 16 must be returned by this event.
4. The user-supplied storage must be located at a valid address and be on a doubleword boundary. The length must also be a multiple of 8. Otherwise, a return code of 16 must be returned by this event. If there is no user-supplied storage, a zero length must be returned as the output.
5. The OCB passed to this event contains options merged through the Assembler user exit level.
6. The user-supplied storage is not freed by Language Environment at termination.
7. The user-supplied user heap storage is subject to the AMODE of the application that requests storage. The user-supplied storage is ignored if the following occurs:
   - The user-supplied storage is above the 16M line, and
   - The ANYWHERE suboption of the HEAP option is in effect, and
   - The application that requests storage is in AMODE(24)

Language Environment allocates below the line storage using the *initsz24* and *incrsz24* suboptions from the HEAP run-time option. In all other cases, the preallocated storage is used.

Event Code 38 — Normal Resume in DSA Event

This event code identifies that a normal (non-condition handler) resumption occurs within the *target_dsa*.

Syntax

Call CEEEVnnn (38, target_dsa, target_dsa_fmt, ph_callee_dsa, ph_callee_dsa_fmt)

```
void       *target_dsa;
INT        *target_dsa_fmt;
void       *ph_callee_dsa;
INT        *ph_callee_dsa_fmt;
```

target_dsa **(input)**
The DSA that is the target for the resume.

target_dsa_fmt **(input)**
The format of the DSA pointed to by *target_dsa*. Possible values are:
0 non-XPLINK
1 XPLINK

ph_callee_dsa **(input)**
A pointer to the DSA of the routine called by the routine owning the DSA pointed to by *target_dsa*.

ph_callee_dsa_fmt **(input)**
The format of the DSA pointed to by *ph_callee_dsa*. Possible values are:
0 non-XPLINK
1 XPLINK

Usage Notes:

1. The Language Environment condition manager determines the member that owns the stack frame that is the target of the resume. Once determined, Language Environment condition manager calls the particular member's event handler just prior to performing the resume operation into the stack frame.
2. It is the member's responsibility to perform the necessary actions to allow the resume to occur within the *target_dsa*.
3. The *ph_callee_dsa* parameter is provided in case the event handler needs to extract registers from the DSA pointed to by *target_dsa*. Registers which are saved in the DSA pointed to by *target_dsa* for non-XPLINK are mostly saved in the DSA pointed to by *ph_callee_dsa*, if *target_dsa_fmt* is XPLINK Note that *ph_callee_dsa_fmt* might not be the same as *target_dsa_fmt*. Also, the DSA pointed to by *ph_callee_dsa* may belong to a Language Environment transition or Language Environment overflow routine.

Event Code 39 — Interrupt Received Event

This event identifies special processing to determine if it is safe to accept the interrupt. This is a special interface between Language Environment's signal interface routine and the PL/I multitasking library and COBOL with multi-threading toleration.

Syntax

Call CEEEV010 (39, *function_code, module_pointer, ppsd_pointer, return_value, dsa_pointer,* **Retcode**(*return_code*))

```
INT4          *function_code;
CEE_ENTRY     *module_pointer;
CEE_TOKEN     *ppsd_pointer;
INT4          *return_value;
CEE_DSA       *dsa_pointer;
INT4          *return_code;
```

function_code **(input)**
The functions are defined as follows:

1 Determine if the module pointed to by *module_pointer* can accept the interrupt.

2 Language Environment has determined that the interrupt must be put back to the kernel. Determine how the interrupt can be resolicited.

module_pointer **(input)**
This argument is a pointer to one of the modules pointed to from the saved register 15 in one of the DSAs on the stack.

ppsd_pointer **(input)**
Is the address of a control structure received by the Language Environment Signal Interrupt Routine from the kernel (defined in BPXYPPSD). This structure, referred to as the PPSD contains PSW and register information that can be used to determine where the interrupt occurred and how to handle it.

return_value **(output)**
If the *function_code* is 1, COBOL or PL/I returns one of the following values:

1 Accept the interrupt.

For COBOL or PL/I this means the module pointed to by *module_pointer* is a COBOL or PL/I user module and it can accept the interrupt. That is, it is safe to accept the interrupt.

2 Do not accept the interrupt.

For COBOL or PL/I this means it is a COBOL or PL/I user module, but cannot accept the interrupt. That is, it is not safe to accept the interrupt. Therefore, the interrupt must be put back.

3 Do not know what to do.

For COBOL or PL/I this means the module pointed to by *module_pointer* is not a COBOL or PL/I user module, and it is up to Language Environment to take a proper action.

If the *function_code* is 2, COBOL or PL/I returns one of the following values:

1 Insert CEEOSIGR into stack at the DSA pointed to by *dsa_pointer*.

2 Do not insert CEEOSIGR, instead swap the LIBVEC pointers with the 'signal glue versions' from CEELVTL.

3 Insert CEEOSIGR into stack at the DSA pointed to by *dsa_pointer* and swap the LIBVEC pointers with the 'signal glue versions' from CEELVTL.

4 Just put back the interrupt.

5 Do not know what to do. It is up to Language Environment to take a proper action.

dsa_pointer **(input/output)**
When used as input, this value is the DSA address of the *module_pointer*. For COBOL or PL/I, if it is a synchronous delivery, the DSA can be used along with the module prologue code to ensure the module is a COBOL or PL/I module.

When used as output, this value applies to function code 2 only. If *function_code* is 2 and the *return_value* is 1 or 3, this parameter is returned pointing to the DSA whose saved register 14 should be replaced with the address of CEEOSIGR. Otherwise, this parameter is ignored.

return_code **(input)**
Standard event handler return code (-4, 0, 16)

Usage Notes:

1. R12 points to a valid CAA.
2. R13 contains the address of a valid DSA with a register save area that can be used to save the caller's registers.
3. The NAB in DSA pointed to by R13 cannot be used. If dynamic storage is required, it must be acquired using GETMAIN or it must be preallocated and the address saved in a control block whose address is accessible through the CAA. Calls to any routines including Language Environment services that require dynamic storage are strictly prohibited.
4. The COBOL or PL/I event handler will be called with this function whenever Language Environment has to decide what to do with the interrupt and PL/I Multitasking is active (CEEEDBPLITASKING = 1) or COBOL has been initialized. COBOL or PL/I must then determine and tell CEEOSIGH/I/J/P what to do with the interrupt.
5. COBOL or PL/I event handler should register a shunt routine in CEECAADMC when storage access could result in a program check. Because a shunt could have already been registered, the current value in CEECAADMC must be saved before registering a shunt and restored before returning to Language Environment.
6. If the event handler returns an undefined disposition value, the action will take the default; that is, the interrupt will be put back and do nothing.
7. The event handler must pass back a return code in R15. These codes are the same as other events. If a nonzero return code is passed back by the event handler, the action will take the default, which is to put back the interrupt and do nothing.
8. CEEOSIGH/I/J/P will put out a trace entry to indicate the disposition result of the Event 39 invocation. If the disposition is to accept the interrupt, the trace entry will indicate the interrupt is accepted by a COBOL or PL/I user module. If the disposition is to put back the interrupt, the trace entry will indicate the signal put back codes.

   Along with the existing signal put back codes defined in Language Environment, the following lists signal put back codes specific for the Event 39 support:

Signal_return codes	06	Signal_Return1, set reg 14 in the user DSA to point to CEEOSIGR. It is corresponding to Event 39 function code 2 return value 1.
	08	Signal_Return1, do nothing but put back. It is corresponding to Event 39 function code 2 return value 4.

Signal_Return2 codes	09	Signal_Return1, swapped LIBVEC pointers to the signal glue code versions. It is corresponding to Event 39 function code 2 return value 2.
	10	Signal_Return1, swapped LIBVEC pointers to the signal glue code versions and set reg 14 in the user's stack frame to point to CEEOSIGR. It is corresponding to Event 39 function code 2 return value 3.

Event Code 40 — Get/Release Function Pointer Event

The Get/Release Function Pointer event is used to obtain or release a function pointer for a function that resides in a separate load module.

Syntax

Call CEEEVnnn (40, *function_code, func_pointer, entry_pointer, ceestart_ptr*)

```
INT4        *function_code;
POINTER     *func_pointer;
POINTER     *entry_pointer;
POINTER     *ceestart_ptr;
```

func_code **(input)**
Defines if this event is a Get or Release request. The functions are defined as follows:
1 Fixed binary(31), indicating Get Function Pointer event
2 Fixed binary(31), indicating Release Function Pointer event

func_pointer **(output)**
For the Get Function Pointer event, contains the returned function pointer. For the Release Function Pointer event, this value contains the function pointer to release.

entry_pointer **(input)**
Language Environment recognizes the following *func_addr* style; Language Environment does not recognize any other entry styles:
- C/370-style PPA
- Language Environment routine entry layout
- Language Environment-format CEESTART
- Language Environment AWI stubs

ceestart_ptr **(input)**
CEESTART of the load module; the load module must be recognized by Language Environment.

Usage Notes:

1. All function pointers obtained must be released before deleting the load module which contains the associated functions.
2. The CEE3ADDM service must be called prior to calling this event handler, to augment the set of currently active members and to notify members that a new load module has been introduced into the enclave.
3. C and C++ are the only target languages that support the Get Function Pointer service.
4. The function pointer is returned with the high-order bit indicating the AMODE of the routine. You must provide the necessary AMODE switching code when passing control to the function pointer.

5. Event 40, function code 2 must be called to release each function pointer obtained, before deleting the load module containing the associated function.
6. If the load module contains any ILC or the loading and loaded modules are written in different languages, the load module should not be deleted.
7. A C function that is called using a pointer returned by Event 40 will have access to the writable static area, if it exists.
8. To use Event 40 to obtain a function pointer for a C function, the C function must either:
   - Be compiled with the pragma linkage(...,fetchable) directive, or
   - Have the function name specified as the entry point when the module is linked.

   In addition, C++ routines must be compiled as extern “C”.
9. Event 40 cannot be used to obtain a function pointer for a C main() routine.
10. If you use Event 40 to obtain a function pointer for a C or C++ function, calling the function pointer will give control to a glue routine. This routine will perform AMODE switching, if needed, before passing control to the C/C++ routine.
11. If you use Event 40 to obtain a function pointer for a C or C++ routine that is compiled as a DLL, the routine cannot export any functions or variables.

Event Code 41 — Cancel/Release Load Module Event

This event notifies a member language that an executable program (load module or program object) is about to be released and to perform any necessary cleanup related to the executable program.

Syntax

Call CEEEVnnn (41, *entry_point, ceestart_ptr, load_point, module_length, idinfo*)

```
POINTER   *entry_point;
POINTER   *ceestart_ptr;
POINTER   *load_point;
POINTER   *module_length;
INT4      *idinfo;
```

entry_point **(input)**
Entry point of the module

ceestart_ptr **(input)**
CEESTART address, if the executable program was recognized, or zero, if it was not recognized

load_point **(input)**
Beginning address of the module

module_length **(input)**
Number of bytes in the module

idinfo **(input)**
A fullword that tells the member language additional information about the calling environment. A new executable program is introduced into the enclave by a COBOL dynamic call, PL/I or C fetch, CEEPIPI services, and DLL implicit and explicit load. The following bits are defined:

Bits	Description
0–23	Reserved

24–31 load_reason

The value indicates the reason provided on the event code 8 (see "Event Code 8 — New Load Module Event" on page 459). The following values are defined:

1 The load was due to a dynamic call, fetch, or CEEPIPI service.
2 The load was due to the explicit or implicit reference of a DLL.

Usage Notes:

1. The member should do any cleanup required related to the module.
2. CEEPIPI(call_sub_addr_nochk), which is described in topic 186, calls this event after the target has returned from the call function.

Event Code 42 — Automatic Destructor Event

This event enables languages with object-oriented features to drive destructor routines (uninitialization methods) for automatic objects on the stack. This event is driven only for C++. This event is driven for each remaining stack frame that needs destructors to be run on a thread that is terminated using pthread_exit() or on a thread that is being cancelled as the result of a pthread_cancel() issued by another thread.

Syntax

Call CEEEVnnn (42, *stack_frame_ptr, stack_frame_fmt, ph_callee_stack_frame_ptr, ph_callee_stack_frame_fmt*)

```
POINTER    *stack_frame_ptr;
INT        *stack_frame_fmt;
POINTER    *ph_callee_stack_frame_ptr;
INT        *ph_callee_stack_frame_fmt;
```

stack_frame_ptr
Pointer to the stack frame for which destructors need to be run.

stack_frame_fmt **(input)**
The format of the DSA pointed to by *stack_frame_ptr*. Possible values are:
0 non-XPLINK
1 XPLINK

ph_callee_stack_frame_ptr **(input)**
A pointer to the DSA of the routine called by the routine owning the DSA pointed to by *stack_frame_ptr*.

ph_callee_stack_frame_fmt **(input)**
The format of the DSA pointed to by *ph_callee_stack_frame_ptr*. Possible values are:
0 non-XPLINK
1 XPLINK

The event handler places one of the following return codes in R15:
-4 The event handler does not want to process the event.
0 The event handler was successful.
16 The event handler found an unrecoverable error.

Note: The *ph_callee_stack_frame_ptr* parameter is provided in case the event handler needs to extract registers from the DSA pointed to by *stack_frame_ptr*. Registers which are saved in the DSA pointed to by *stack_frame_ptr* for non-XPLINK are mostly saved in the DSA pointed to by *ph_callee_stack_frame_ptr*,

if *stack_frame_fmt* is XPLINK Note that *ph_callee_stack_frame_fmt* might not be the same as *stack_frame_fmt*. Also, the DSA pointed to by *ph_callee_stack_frame_ptr* may belong to a Language Environment transition or Language Environment overflow routine.

Chapter 16. z/OS UNIX System Services Support

This section describes the support provided by Language Environment services for z/OS UNIX System Services (z/OS UNIX).

Language Environment Version 1 Releases 3, 4, and 5 support the POSIX 1003.1, 1003.1a, 1003.1c standards, and a subset of the POSIX 1003.1d standards. All of the interfaces described in this section are available only to C or C++ routines. These threading functions must be link-edited with the application. Additionally, these functions cannot be dynamically fetched.

Notes:

1. Functions that end with the characters _np are extensions to the POSIX standard.
2. Unless otherwise specified, access to the following CWIs requires that the run-time option POSIX be set ON.
3. Fortran is not supported in this environment.

Thread Management Functions

The CWIs in this section support POSIX thread management functions.

CEEOPAI

CEEOPAI initializes a thread attribute object, *attr*. The resulting thread attribute object (possibly modified by subsequent assignment to its members), when used by the create thread function, defines the attributes for the thread to be created.

A single thread attribute object can be used multiple times, thus creating a number of threads with the same characteristics. It is the user's responsibility to serialize changes to the thread attribute object.

Syntax

void CEEOPAI (*attr, [fc]*)

```
CEE_TOKEN   *attr;
FEED_BACK   *fc;
```

CEEOPAI

Call this CWI interface as follows:

```
L     R15,CEECAALEOV-CEECAA(,R12)     CAA address is in R12
L     R15,0124(,R15)
BALR  R14,R15
```

attr **(input)**

The token for the thread attribute object to be initialized.

fc **(output/optional)**

The feedback code returned by the service. It indicates the degree of success in initializing the new thread attribute object.

The following message identifiers and associated severities can be returned by the service in the feedback code *fc*.

© Copyright IBM Corp. 1991, 2002

CEE000	Severity	0
	Msg_No	0000
	Message	The service completed successfully.

CEEOPAD

CEEOPAD sets the thread attribute object referred to by *attr* to an invalid value.

Syntax

void CEEOPAD (*attr, [fc]*)

```
CEE_TOKEN   *attr;
FEED_BACK   *fc;
```

CEEOPAD

Call this CWI interface as follows:

```
L     R15,CEECAALEOV-CEECAA(,R12)     CAA address is in R12
L     R15,0128(,R15)
BALR  R14,R15
```

attr **(input)**

The address of a thread attribute object.

fc **(output/optional)**

The feedback code returned by the service. It indicates the degree of success in deleting the thread attribute object.

The following message identifiers and associated severities can be returned by the service in the feedback code *fc*.

CEE000	Severity	0
	Msg_No	0000
	Message	The service completed successfully.
CEE5F1	Severity	3
	Msg_No	5601
	Message	Invalid thread attribute object was passed.

CEEOPAGD

CEEOPAGD obtains the thread's *detachstate* attribute from the specified thread attribute object.

Syntax

void CEEOPAGD (*attr, detachstate, [fc]*)

```
CEE_TOKEN   *attr;
INT4        *detachstate;
FEED_BACK   *fc;
```

CEEOPAGD

Call this CWI interface as follows:

```
L     R15,CEECAALEOV-CEECAA(,R12)     CAA address is in R12
L     R15,0132(,R15)
BALR  R14,R15
```

attr **(input)**
The token of the initialized thread attribute object.

detachstate **(output)**
0 or 1 indicates whether or not a thread should be detached immediately upon completion.

fc **(output/optional)**
The feedback code returned by the service. It indicates the degree of success in getting the thread stack size attribute.

The following message identifiers and associated severities can be returned by the service in the feedback code *fc*.

CEE000	Severity	0
	Msg_No	0000
	Message	The service completed successfully.
CEE5F1	Severity	3
	Msg_No	5601
	Message	Invalid thread attribute object was specified.

CEEOPAGS

CEEOPAGS obtains the thread's *stack_size* attribute from the specified thread attribute object.

Syntax

void CEEOPAGS (*attr, stack_size, [fc]*)

```
CEE_TOKEN   *attr;
INT4        *stack_size;
FEED_BACK   *fc;
```

CEEOPAGS
Call this CWI interface as follows:

```
L     R15,CEECAALEOV-CEECAA(,R12)     CAA address is in R12
L     R15,0140(,R15)
BALR  R14,R15
```

attr **(input)**
The token of dynamically created thread attribute object.

stack_size **(output)**
The non-negative stack_size attribute value (in bytes).

fc **(output/optional)**
The feedback code returned by the service. It indicates the degree of success in getting the thread stack size attribute.

The following message identifiers and associated severities can be returned by the service in the feedback code *fc*.

CEE000	Severity	0
	Msg_No	0000
	Message	The service completed successfully.

CEE5F1	Severity	3
	Msg_No	5601
	Message	Invalid thread attribute object was specified.

CEEOPAGW

CEEOPAGW obtains the thread's *threadweight* attribute from the specified thread attribute object.

Syntax

void CEEOPAGW (*attr, threadweight, [fc]*)

```
CEE_TOKEN   *attr;
INT4        *threadweight;
FEED_BACK   *fc;
```

CEEOPAGW

Call this CWI interface as follows:

```
L     R15,CEECAALEOV-CEECAA(,R12)     CAA address is in R12
L     R15,0148(,R15)
BALR  R14,R15
```

attr **(input)**

The token of the initialized thread attribute object.

threadweight **(output)**

1 or 2 indicates the weight of the thread in the thread attribute object.

fc **(output/optional)**

The feedback code returned by the service. It indicates the degree of success in getting the thread's threadweight attribute.

The following message identifiers and associated severities can be returned by the service in the feedback code *fc*.

CEE000	Severity	0
	Msg_No	0000
	Message	The service completed successfully.
CEE5F1	Severity	3
	Msg_No	5601
	Message	Invalid thread attribute object was specified.

CEEOPASD

The *detachstate* of the thread attribute object indicates if a thread should either be detached immediately upon completion or remain nondetached. CEEOPASD sets the appropriate value in the thread attribute object.

Syntax

void CEEOPASD (*attr, detachstate, [fc]*)

```
CEE_TOKEN   *attr;
INT4        *detachstate;
FEED_BACK   *fc;
```

CEEOPASD

Call this CWI interface as follows:

```
L     R15,CEECAALEOV-CEECAA(,R12)     CAA address is in R12
L     R15,0136(,R15)
BALR  R14,R15
```

attr **(input)**

The token of the initialized thread attribute object.

detachstate **(input)**

0 indicates the thread remains in an undetached state after termination of the thread. 1 indicates the thread is detached upon completion.

fc **(output/optional)**

The feedback code returned by the service. It indicates the degree of success in setting the thread detachstate attribute.

The following message identifiers and associated severities can be returned by the service in the feedback code *fc*.

CEE000	Severity	0
	Msg_No	0000
	Message	The service completed successfully.
CEE5F1	Severity	3
	Msg_No	5601
	Message	Invalid thread attribute object was specified.
CEE5F2	Severity	3
	Msg_No	5602
	Message	The value of *detachstate* is not 0 or 1.

CEEOPASS

CEEOPASS sets the thread's *stack_size* attribute in the specified thread attribute object, *attr*. Note the thread's stack_size attribute is initialized to the size specified by the STACK run-time option when the thread attribute object is initialized.

Syntax

void CEEOPASS (*attr, stack_size, [fc]*)

```
CEE_TOKEN   *attr;
INT4        *stack_size;
FEED_BACK   *fc;
```

CEEOPASS

Call this CWI interface as follows:

```
L     R15,CEECAALEOV-CEECAA(,R12)     CAA address is in R12
L     R15,0144(,R15)
BALR  R14,R15
```

attr **(input)**

The token of dynamically created thread attribute object.

stack_size **(input)**

The non-negative initial size (in bytes) of the run-time stack for a thread.

fc **(output/optional)**
The feedback code returned by the service. It indicates the degree of success in setting the thread stack size attribute.

The following message identifiers and associated severities can be returned by the service in the feedback code *fc*.

CEE000	Severity	0
	Msg_No	0000
	Message	The service completed successfully.
CEE5F1	Severity	3
	Msg_No	5601
	Message	Invalid thread attribute object was specified.
CEE5FC	Severity	3
	Msg_No	5612
	Message	The *stack_size* attribute did not contain a valid value.

CEEOPASW

CEEOPASW indicates the weight of a thread, either medium or heavy weight.

Syntax

void CEEOPASW (*attr, threadweight, [fc]*)

```
CEE_TOKEN   *attr;
INT4        *threadweight;
FEED_BACK   *fc;
```

CEEOPASW
Call this CWI interface as follows:

```
L     R15,CEECAALEOV-CEECAA(,R12)     CAA address is in R12
L     R15,0152(,R15)
BALR  R14,R15
```

attr **(input)**
The token of the initialized thread attribute object.

threadweight **(input)**
1 indicates an MWT; 2 indicates an HWT.

fc **(output/optional)**
The feedback code returned by the service. It indicates the degree of success in setting the thread weight attribute.

The following message identifiers and associated severities can be returned by the service in the feedback code *fc*.

CEE000	Severity	0
	Msg_No	0000
	Message	The service completed successfully.
CEE5F1	Severity	3
	Msg_No	5601
	Message	Invalid thread attribute object was specified.

CEE5F3	Severity	3
	Msg_No	5603
	Message	Invalid value for threadweight.

CEEOPC

CEEOPC creates a new thread in the caller's enclave and in the context of the current enclave with the specified attribute, *attr*. The new thread starts executing the routine at the entry point referred to by *routine_addr* with *arg* as its sole argument. When the routine returns, thread is implicitly terminated using the return value of the program as the termination status. The thread is detached according to the *detachstate* setting of the thread attribute specified at thread creation.

Upon successful completion of this function, the thread identifier of the newly created thread is returned in the location referred to by *thread_id*. This thread identifier is used to refer to the new thread as input to other tasking functions.

Syntax

void CEEOPC (*routine_addr, [arg], [attr], thread_id, [fc]*

```
CEE_ENTRY   *routine_addr;
CEE_TOKEN   *arg;
CEE_TOKEN   *attr;
CEE_THDID   *thread_id;
FEED_BACK   *fc;
```

CEEOPC

Call this CWI interface as follows:

```
L     R15,CEECAALEOV-CEECAA(,R12)     CAA address is in R12
L     R15,0048(,R15)
BALR  R14,R15
```

routine_addr **(input)**
The entry point of an external routine (not a nested procedure) that the new thread starts executing.

arg **(input/optional)**
An argument to be passed to the routine at its entry point. Its type is determined by the requirements of the routine called. This is the R1 value that is inbound to the target routine.

attr **(input/optional)**
The token of a thread attributes object to be used for the new thread. When *attr* is omitted, the default attributes are used.

thread_id **(output)**
The location to contain the unique thread identifier generated by Language Environment. It is used to refer to the new thread in other services. The thread identifier occupies a double word. The exact content of the thread identifier is not externalized.

fc **(output/optional)**
The feedback code returned by the service. It indicates the degree of success in creating the new thread.

The following message identifiers and associated severities can be returned by the service in the feedback code *fc*.

CEE000	Severity	0
	Msg_No	0000
	Message	The service completed successfully.
CEE5F1	Severity	3
	Msg_No	5601
	Message	The attributes object parameter did not contain a valid initialized attributes object (POSIX PTAT).
CEE5F4	Severity	3
	Msg_No	5604
	Message	A new thread could not be created due to some system-detected error with error code <*err_code*> and reason code <*rsn_code*>.
CEE5F5	Severity	3
	Msg_No	5605
	Message	There was not enough storage available to create the new thread.

Usage Notes:

1. It is assumed that *routine_addr* is currently available and does not require an explicit LOAD performed.
2. The new thread starts execution at the external procedure given in *routine_addr* and shares the context of the current enclave.
3. The thread shares all resources of the enclave.
4. The new thread has access to a new, independent stack. In particular, a new stack frame zero is provided.
5. The new thread inherits the execution priority from its creator. The size of the stack is determined by the stack size thread attribute.
6. The user must serialize use of shared resources, for instance, external data or arguments.
7. Arguments can be passed to the routine to be executed if the routine is declared to accept them. Output arguments and in/out arguments can be passed. Since the thread runs asynchronously with the creating thread, arguments passed by reference become shared variables and their use should be serialized, if necessary. Since the thread doesn't return to its creator, output arguments returned by value could be lost if the storage referred to by the arguments no longer exists. This might occur if the caller provided automatic storage for the arguments to the new thread.
8. POSIX provides a per-process signal vector and a per-thread signal mask.
9. The *thread_id* is used to refer to the thread as input to other services. No other use of *thread_id* is allowed.
10. Success of thread creation is reported by the *fc*. This does not report on success of Language Environment initialization in the new thread nor the successful execution of the code on the thread. If the *fc* is nonzero, *thread_id* is not valid. If the *fc* is zero, the *thread_id* is valid and can be used in functions that require thread identifiers.
11. The new thread's state is *runnable*.

CEEOPD

CEEOPD indicates that storage for the thread referred to by *thread_id* can be reclaimed when that thread terminates. This is required since some storage for the thread such as storage for thread's status value and the thread's identifier is kept around after thread termination for a later interrogation by other threads. If the thread has not terminated, this function does not cause it to terminate. This function should eventually be called for every thread that is created so that storage associated with the thread can be reclaimed (pointer to the storage might be invalidated). A thread can be detached automatically upon termination if the thread attribute indicates such. If a thread is not detached (either through this service or through the thread attribute), the storage is reclaimed during enclave termination.

Syntax

void CEEOPD (*thread_id, [fc]*)

```
CEE_TOKEN   *thread_id;
FEED_BACK   *fc;
```

CEEOPD

Call this CWI interface as follows:

```
L     R15,CEECAALEOV-CEECAA(,R12)     CAA address is in R12
L     R15,0056(,R15)
BALR  R14,R15
```

thread_id **(input)**

The unique thread identifier of the thread being detached.

fc **(output/optional)**

The feedback code returned by the service. It indicates the degree of success in detaching a terminated thread.

The following message identifiers and associated severities can be returned by the service in the feedback code *fc*.

CEE000	Severity	0
	Msg_No	0000
	Message	The service completed successfully.
CEE5F6	Severity	2
	Msg_No	5606
	Message	The value specified by *thread_id* is invalid.
CEE5F7	Severity	3
	Msg_No	5607
	Message	The value specified by *thread_id* is already detached.

Usage Notes:

1. The stack is always released when the first routine in the thread returns. That is, no automatic storage survives when the thread terminates.
2. The thread status code and thread identifier can persist beyond thread termination until the thread is explicitly detached or until the enclave is terminated.

CEEOPE

CEEOPE terminates the calling thread within the current enclave. A thread termination *status* can be specified so that it becomes available to a thread waiting for the terminating thread. The status remains available until the thread is detached.

Thread termination does not release any application-visible enclave (or process) resources such as mutexes.

This function does not return to its caller.

Syntax

void CEEOPE (*status*)

```
INT4    *status;
```

CEEOPE

Call this CWI interface as follows:

```
L     R15,CEECAALEOV-CEECAA(,R12)     CAA address is in R12
L     R15,0072(,R15)
BALR  R14,R15
```

status **(input)**

The value of thread termination status to become available to a thread waiting for the current thread to terminate. The value is user-defined.

CEEOPEQ

CEEOPEQ compares the specified thread identifiers. Upon successful completion of this function, a nonzero value is returned in the *result* argument if the specified thread identifiers are equal. Otherwise, a zero value is returned.

Syntax

void CEEOPEQ (*thread_id1, thread_id2, result, [fc]*)

```
CEE_THDID    *thread_id1;
CEE_THDID    *thread_id2;
INT2        *result;
FEED_BACK   *fc;
```

CEEOPEQ

Call this CWI interface as follows:

```
L     R15,CEECAALEOV-CEECAA(,R12)     CAA address is in R12
L     R15,0088(,R15)
BALR  R14,R15
```

thread_id1 **(input)**

The thread identifier of the first thread.

thread_id2 **(input)**

The thread identifier of the second thread.

result **(output)**

The result of the *thread_id* comparison. A nonzero value indicates the two thread identifiers are equal and a zero value indicates otherwise.

fc **(output/optional)**

The feedback code returned by the service. It indicates the degree of success in comparing the thread identifiers.

The following message identifiers and associated severities can be returned by the service in the feedback code *fc*.

CEE000	Severity	0
	Msg_No	0000
	Message	The service completed successfully.

CEEOPJ

CEEOPJ suspends execution of the calling thread until the target thread specified by *thread_id* terminates. The calling thread is thus placed into the *blocked* state. When the target thread completes, the calling thread is placed into the runnable state. The target thread cannot be the calling thread.

If the target thread is already terminated, the call returns without the calling thread being blocked.

Upon successful completion of this function:

1. The termination status of the target thread is returned in the location referred to by *status*. This is set for normal return using *pthread_exit()*.
2. If the detach parameter of CEEOPJ, *WithDetach*, is set to one (1), CEEOPJ detaches the target thread before returning. Otherwise, CEEOPJ does not detach the target thread.

Syntax

void CEEOPJ (*thread_id, WithDetach, status, [fc]*)

```
CEE_TOKEN   *thread_id;
INT4        *WithDetach;
POINTER     *status;
FEED_BACK   *fc;
```

CEEOPJ

Call this CWI interface as follows:

```
L     R15,CEECAALEOV-CEECAA(,R12)     CAA address is in R12
L     R15,0068(,R15)
BALR  R14,R15
```

thread_id **(input)**

The unique thread identifier of the target thread.

WithDetach **(input)**

The indicator of whether the target thread should be detached before CEEOPJ returns.

0 Do not detach
1 Detach

status **(input/output)**

The location in which the value passed to the thread termination function by the terminating (target) thread is returned.

fc **(output/optional)**

The feedback code returned by the service. It indicates the degree of success in waiting for the thread termination.

The following message identifiers and associated severities can be returned by the service in the feedback code *fc*.

CEE000	Severity	0
	Msg_No	0000
	Message	The service completed successfully.
CEE5F6	Severity	3
	Msg_No	5606
	Message	The value specified by *thread_id* is not a valid thread identifier.
CEE5F7	Severity	3
	Msg_No	5607
	Message	The value specified by *thread_id* is the thread identifier of the currently executing thread.
CEE5F8	Severity	3
	Msg_No	5608
	Message	The z/OS UNIX BPX1PTJ system call by CEEOPJ failed.
CEE5F9	Severity	3
	Msg_No	5609
	Message	The thread specified by *thread_id* is not in an undetached state, is currently joined by another thread, or does not exist.

CEEOPO

CEEOPO insures the routine passed is executed only once during the execution of a POSIX process (based upon the *once_ctl* that is passed).

Syntax

void CEEOPO (*once_ctl, init_rtn, [fc]*)

```
pthread_once_t *once_ctl;
ENTRY          *init_rtn;
FEED_BACK      *fc;
```

CEEOPO

Call this CWI interface as follows:

```
L     R15,CEECAALEOV-CEECAA(,R12)     CAA address is in R12
L     R15,0084(,R15)
BALR  R14,R15
```

once_ctl **(input)**

Determines whether the *init_rtn* had been called for the POSIX process.

init_rtn **(input)**

The user routine that is executed on behalf of the `pthread_once` call. The user routine is invoked without any parameters.

fc **(output/optional)**

The feedback code returned by the service.

The following message identifiers and associated severities can be returned by the service in the feedback code *fc*.

CEE000	Severity	0
	Msg_No	0000
	Message	The service completed successfully.
CEE5GJ	Severity	3
	Msg_No	5651
	Message	The *once_control* parameter did not contain a valid value.

Usage Notes:

1. Nested `pthread_once` invocations are allowed.
2. Careful use of `longjmp()` is allowed. However, doing a `longjmp` out of the *init_rtn* does not cause the `pthread_once()` to terminate; any threads that are in a wait for the `once_ctl` remain in a wait.

CEEOPS

CEEOPS obtains the identifier of the calling thread. This is useful since the thread creation call does not provide the thread identifier to the created thread.

Upon successful completion of this function, the thread identifier of the calling thread is returned in the specified argument, *thread_id*.

Syntax

void CEEOPS (*thread_id, [fc]*)

```
CEE_TOKEN   *thread_id;
FEED_BACK   *fc;
```

CEEOPS

Call this CWI interface as follows:

```
L     R15,CEECAALEOV-CEECAA(,R12)     CAA address is in R12
L     R15,0080(,R15)
BALR  R14,R15
```

thread_id **(output)**

The thread identifier of the calling thread.

fc **(output/optional)**

The feedback code returned by the service. It indicates the degree of success in getting the calling thread identifier.

The following message identifiers and associated severities can be returned by the service in the feedback code *fc*.

CEE000	Severity	0
	Msg_No	0000
	Message	The service completed successfully.

Signal Handling CWIs

This section describes the CWIs for signal handling.

CEEOKILL

This is used to support `kill()`, `pthread_kill()`, and `sigqueue()`.

The specific mapping is as follows:

```
kill(pid, sig):         CEEOKILL('1', pid, '0', Cond_Token, '0', fc)
pthread_kill(tid, sig): CEEOKILL('2', '0', tid, Cond_Token, '0', fc)
sigqueue(pid, sig_val): CEEOKILL('3', pid, '0', Cond_Token, 'sig_val', '0', fc)
raise(sig):             CEEOKILL('1', getpid(), '0', Cond_Token, '0', fc)
```

The function value is set based on the severity code in the feedback token (*fc*).

Syntax

void CEEOKILL (*function, process_id, thread_id, cond_rep, sig_val, [q_data_token], [fc]*)

```
INT4        *function;
CEE_TOKEN   *process_id;
CEE_TOKEN   *thread_id;
FEED_BACK   *cond_rep;
CEE_TOKEN   *sig_val;
CEE_TOKEN   *q_data_token;
FEED_BACK   *fc;
```

CEEOKILL

Call this CWI interface as follows:

```
L     R15,CEECAALEOV-CEECAA(,R12)     CAA address is in R12
L     R15,0028(,R15)
BALR  R14,R15
```

function **(input)**

Indicate the origin of this CWI request. It is 1 for `kill()`, 2 for `pthread_kill()` and 3 for `sigqueue()`. `raise()` is mapped to `kill()` to self (for example, function value = 1).

process_id **(input)**

Ignored unless the function value is 1. It indicates the process identifier to which the signal is to be sent. If that identifier is zero, the signal is sent to all processes (excluding an unspecified set of system processes) whose group identifier is equal to the process group identifier of the sender and for which the process has permission to send a signal. If the process identifier is negative (but not -1), the signal is sent to all of the processes (excluding an unspecified set of system processes) whose process group identifier is equal to the absolute value of this argument and for which the process has permission to send a signal.

thread_id **(input)**

Ignored unless the function value is 2. If the thread identifier is nonzero, the signal is sent to the identified thread. If the thread identifier is zero, the signal is sent to the process(es) based on the process identifier setting.

cond_rep **(input)**

The condition token defining the signal to be raised. The valid conditions are CEE5201 through CEE5222. CEE5223 and CEE5234 are supported in z/OS UNIX System Services. Additionally, CEE5200 represents the signal number value of zero and indicates the request for the validation the arguments but causes no signal to be sent. For a list of condition tokens that map to signals, see *z/OS Language Environment Programming Guide*.

sig_val **(input)**
Ignored unless the function value is 3. It indicates the value to be supplied with the signal when it is delivered to the process identified by the pid.

q_data_token **(input/optional)**
32-bit data to be placed in the ISI for use in accessing the qualifying data associated with the given instance of the signal.

fc **(output/optional)**
A condition token returned by the service, indicating the degree of success of the service. Note that the module returning the code is in parentheses, but to the caller, it appears that CEEOKILL can return any of these.

CEE000	Severity	0
	Msg_No	0000
	Message	The service completed successfully.
CEE4S9	Severity	3
	Msg_No	5001
	Message	The function failed due to POSIX(OFF) in effect (CEEOKILL).
CEE55L	Severity	3
	Msg_No	5301
	Message	The value specified by cond_rep represents an invalid condition or a condition which is not a POSIX signal as defined for this product (CEEOKILL).
CEE55M	Severity	3
	Msg_No	5302
	Message	The service was unsuccessful due to a z/OS Environmental or Internal error (CEEOSIGG). Consult the Reason_Code returned to determine the exact reason the error occurred. The following reason code can accompany this error: JRPTCANCELERROR.

Note that Return_Code and Reason_Code are returned as part of the qualifying data information of the *fc* as shown in Figure 105.

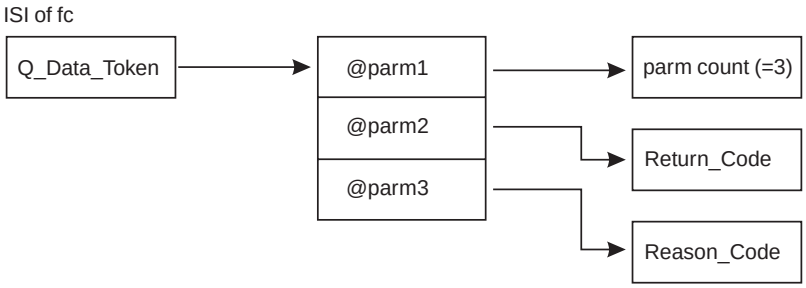

Figure 105. Condition Qualifying Data Returned by CEEOKILL CWI

Thread Keyed Data CWIs

The CWIs in this section support POSIX thread keyed data functions.

CEEOPGS

CEEOPGS obtains the thread-specific value associated with a key that was obtained from a previous call to CEEKCRT. Different threads can have different values bound to the same key.

When successful, CEEOPGS stores the value currently bound to the specified *key* to the storage location referred to by the storage location which is in turn referred to by *value*. Language Environment manages the storage associated with the key/value bindings.

Syntax

void CEEOPGS (*key, value, [fc]*)

```
CEE_TOKEN   *key;
CEE_TOKEN   *value;
FEED_BACK   *fc;
```

CEEOPGS

Call this CWI interface as follows:

```
L     R15,CEECAALEOV-CEECAA(,R12)     CAA address is in R12
L     R15,0096(,R15)
BALR  R14,R15
```

key **(input)**

The identifier for which the value is to be obtained. The key is generated by a (previous) call to CEEKCRT.

value **(output)**

The address of the address of the location to store the value currently associated with the key identifier. The value binding for the key is specific to the thread. The value typically is the address of a storage area to be unallocated during thread termination by the destructor function.

fc **(output/optional)**

The feedback code returned by the service. It indicates the degree of success in creating the new key.

The following message identifiers and associated severities can be returned by the service in the feedback code *fc*.

CEE000	Severity	0
	Msg_No	0000
	Message	The service completed successfully.
CEE4S9	Severity	3
	Msg_No	5001
	Message	POSIX services not available.
CEE5CQ	Severity	3
	Msg_No	5530
	Message	The key value is invalid. That is, the key identifier is not one of the keys previously defined by CEEKCRT.

CEE5CS	Severity	3
	Msg_No	5532
	Message	Thread termination is in progress. This operation is not allowed. A key get operation is not permitted during thread termination.
CEE5CT	Severity	3
	Msg_No	5533
	Message	Program interrupt referring to user parameters.

Usage Notes:

1. Different threads can bind different values to the same key.
2. This function cannot be called during thread termination.

CEEOPKC

CEEOPKC creates a new unique key in the caller's enclave and in the context of the current enclave. The *destructor* is a pointer to a function to be executed upon thread termination. The function assigns a key identifier and returns it in the location referred to by *key*. Key identifiers and their associated destructor functions are common to all threads in the enclave.

Syntax

void CEEOPKC (*key, [destructor], [fc]*)

```
CEE_TOKEN   *key;
CEE_ENTRY *destructor;
FEED_BACK   *fc;
```

CEEOPKC

Call this CWI interface as follows:

```
L     R15,CEECAALEOV-CEECAA(,R12)     CAA address is in R12
L     R15,0092(,R15)
BALR  R14,R15
```

key **(output)**

The location to contain the unique key identifier. Language Environment generates the key identifier; it is used to refer to this key by any thread within the enclave.

destructor **(input/optional)**

The function pointer which is the user routine to gain control during thread termination. This routine must be an external routine (not a nested procedure). This parameter can be omitted.

fc **(output/optional)**

The feedback code returned by the service. It indicates the degree of success in creating the new key.

The following message identifiers and associated severities can be returned by the service in the feedback code *fc*.

CEE000	Severity	0
	Msg_No	0000
	Message	The service completed successfully.

CEE4S9	Severity	3
	Msg_No	5001
	Message	POSIX is not initialized.
CEE5CM	Severity	3
	Msg_No	5526
	Message	There was not enough storage available to create the new key.
CEE5CN	Severity	3
	Msg_No	5527
	Message	The key name space is exhausted. The key creation would have resulted in more than the system imposed limit for the maximum number of data keys which can be created per enclave.
CEE5CO	Severity	3
	Msg_No	5528
	Message	Thread termination is in progress. This operation is not allowed. Key creation is not permitted during thread termination.
CEE5CT	Severity	3
	Msg_No	5533
	Message	The key pointer passed is invalid.

Usage Notes:

1. It is assumed that *destructor* is currently available and does not require an explicit LOAD performed.
2. The key identifier returned can be used by all threads within the enclave using the CEEKSET and CEEKGET services.

CEEOPSS

CEEOPSS establishes a thread-specific value to a key obtained by a previous call to CEEKCRT. Different threads can bind different values to the same key.

When successful, CEEOPSS obtains the value from the location referred to by *value* and assigns it to a Language Environment-managed storage location associated with the *key*.

Syntax

void CEEOPSS (*key, value, [fc]*)

```
CEE_TOKEN   *key;
CEE_TOKEN   *value;
FEED_BACK   *fc;
```

CEEOPSS

Call this CWI interface as follows:

```
L     R15,CEECAALEOV-CEECAA(,R12)     CAA address is in R12
L     R15,0100(,R15)
BALR  R14,R15
```

key **(input)**
The identifier to which the value is to be associated. The identifier is generated by a (previous) call to CEEKCRT.

value **(input)**
The value to be associated with the key identifier. The value binding for the key is specific to the thread. The value typically is the address of a storage area to be unallocated during thread termination by the destructor function.

fc **(output/optional)**
The feedback code returned by the service. It indicates the degree of success in creating the new key.

The following message identifiers and associated severities can be returned by the service in the feedback code *fc*.

CEE000	Severity	0
	Msg_No	0000
	Message	The service completed successfully.
CEE5CP	Severity	3
	Msg_No	5529
	Message	There was not enough storage available to bind the value to the key.
CEE5CQ	Severity	3
	Msg_No	5530
	Message	The key value is invalid. The key identifier is not one of the keys previously defined by CEEKCRT.
CEE5CR	Severity	3
	Msg_No	5531
	Message	Thread termination is in progress. This operation is not allowed. A key set operation is not permitted during thread termination.
CEE5CT	Severity	3
	Msg_No	5533
	Message	Invalid user parameter caused a program exception.

Usage Notes:

1. Different threads can bind different values to the same key.
2. Calling this function during thread termination can result in undefined behavior.

Thread Cancellation CWIs

The CWIs in this section support POSIX thread cancellation functions.

CEEOPCAN

CEEOPCAN requests the specified thread to be canceled.

Syntax

void CEEOPCAN (*thread, [fc]*)

```
CEE_THDID    *thread;
FEED_BACK   *fc;
```

CEEOPCAN

Call this CWI interface as follows:

```
L     R15,CEECAALEOV-CEECAA(,R12)     CAA address is in R12
L     R15,0052(,R15)
BALR  R14,R15
```

thread **(input)**

The thread to be canceled.

fc **(output/optional)**

The feedback code returned by the service.

The following message identifiers and associated severities can be returned by the service in the feedback code *fc*.

CEE000	Severity	0
	Msg_No	0000
	Message	The service completed successfully.
CEE5F6	Severity	2
	Msg_No	5606
	Message	The value specified by *thread_id* is invalid.

CEEOPCPO

CEEOPCPO removes the routine at the top of the calling thread's cleanup stack and optionally executes it (if *execute* is nonzero). The cleanup stack is that which is specific to cleanup routines registered for the thread by the `pthread_cleanup_push()` (CEEOPCPO) function. The processing of CEEOPCPO operations also (logically) takes place at thread termination.

Syntax

void CEEOPCPO (*execute, [fc]*)

```
INT4        *execute;
FEED_BACK   *fc;
```

CEEOPCPO

Call this CWI interface as follows:

```
L     R15,CEECAALEOV-CEECAA(,R12)     CAA address is in R12
L     R15,0060(,R15)
BALR  R14,R15
```

execute **(input)**

An indicator to execute the cleanup routine which is being popped. If nonzero, the routine that was previously registered through `pthread_cleanup_push()` (CEEOPCPO) is executed.

fc **(output/optional)**
The feedback code returned by the service. It indicates the degree of success in popping and optionally executing the routine.

The following message identifiers and associated severities can be returned by the service in the feedback code *fc*.

CEE000	Severity	0
	Msg_No	0000
	Message	The service completed successfully.
CEE4S9	Severity	3
	Msg_No	5001
	Message	POSIX services not available.
CEE5FS	Severity	3
	Msg_No	5628
	Message	Thread termination is in progress. This operation is not allowed. Calls to cleanup routine functions are not permitted during thread termination.
CEE5FT	Severity	3
	Msg_No	5629
	Message	No routine to execute (stack is empty).

CEEOPCPU

CEEOPCPU establishes the new thread specific cleanup routine. The *routine* is a pointer to a function to be executed as a result of thread termination, and optionally as part of `pthread_cleanup_pop()`. The *arg* value refers to an optional argument that is passed to the cleanup routine when it is called. The registration of a cleanup routine (CEEOPCPU) is on a per-thread basis at a given stack frame.

Syntax

void CEEOPCPU (*routine, [arg], [fc]*)

```
CEE_ENTRY *routine;
CEE_TOKEN   *arg;
FEED_BACK   *fc;
```

CEEOPCPU
Call this CWI interface as follows:

```
L     R15,CEECAALEOV-CEECAA(,R12)     CAA address is in R12
L     R15,0064(,R15)
BALR  R14,R15
```

routine **(input)**
The entry point of a routine which is to be executed at thread termination and (optionally) upon a call to CEEOPCPO. An optional value can be passed to this routine.

arg **(input/optional)**
A pointer which is passed to *routine* when it is executed.

fc **(output/optional)**
The feedback code returned by the service. It indicates the degree of success in pushing the cleanup routine.

CEEOPCPU CWI

The following message identifiers and associated severities can be returned by the service in the feedback code *fc*.

CEE000	Severity	0
	Msg_No	0000
	Message	The service completed successfully.
CEE4S9	Severity	3
	Msg_No	5001
	Message	POSIX services not available.
CEE5FQ	Severity	3
	Msg_No	5626
	Message	There was not enough storage available to register the cleanup handler.
CEE5FR	Severity	3
	Msg_No	5627
	Message	Thread termination is in progress. This operation is not allowed. Cleanup routine registration is not permitted during thread termination.

Usage Notes:

1. It is assumed that *routine* is currently available and does not require an explicit LOAD performed.
2. This routine does not do any validation of the routine address.
3. Cleanup handlers that are pushed in a destructor routine but not popped explicitly, are not executed. According to POSIX, the order of execution at thread termination is first cleanup handlers, then destructor routines.
4. If a `longjmp()` is executed that exits the cleanup handler and returns into a point of the executing code, remaining cleanup handlers that have not yet been popped remain pending. If POSIX is ON, a `longjmp()` out of a cleanup handler is defined as an undefined behavior (such as an error).

CEEOPSI

CEEOPSI either enables or disables cancellation requests. If disabled, the cancellation request is held pending.

Syntax

void CEEOPSI (*state, previous_state, [fc]*)

```
INT4        *state;
INT4        *previous_state;
FEED_BACK   *fc;
```

CEEOPSI

Call this CWI interface as follows:

```
L     R15,CEECAALEOV-CEECAA(,R12)     CAA address is in R12
L     R15,0104(,R15)
BALR  R14,R15
```

state **(input)**

The interrupt state that is established for the current thread.

previous_state **(input)**
The interrupt state in effect prior to this call for the current thread.

fc **(output/optional)**
The feedback code returned by the service.

The following message identifiers and associated severities can be returned by the service in the feedback code *fc*.

CEE000	Severity	0
	Msg_No	0000
	Message	The service completed successfully.
CEE5F9	Severity	3
	Msg_No	5609
	Message	Invalid interrupt state specified.

CEEOPTI

CEEOPTI creates an interruption point within the calling thread.

Syntax

void CEEOPTI (*[fc]*)

```
FEED_BACK    *fc;
```

CEEOPTI
Call this CWI interface as follows:

```
L     R15,CEECAALEOV-CEECAA(,R12)     CAA address is in R12
L     R15,0112(,R15)
BALR  R14,R15
```

fc **(output/optional)**
The feedback code returned by the service.

The following message identifier and associated severity can be returned by the service in the feedback code *fc*.

CEE000	Severity	0
	Msg_No	0000
	Message	The service completed successfully.

CEEOPY

CEEOPY relinquishes control allowing other threads an opportunity to execute on the processor.

Syntax

void CEEOPY (*arg, [fc]*)

```
void        *arg;
FEED_BACK   *fc;
```

CEEOPY
Call this CWI interface as follows:

```
L     R15,CEECAALEOV-CEECAA(,R12)     CAA address is in R12
L     R15,0076(,R15)
BALR  R14,R15
```

arg **(input)**
This must be NULL.

fc **(output/optional)**
The feedback code returned by the service.

The following message identifier and associated severity can be returned by the service in the feedback code *fc*.

CEE000	Severity	0
	Msg_No	0000
	Message	The service completed successfully.

Thread Synchronization — Mutex and Read-Write Locks

The CWIs in this section support POSIX mutex and read-write locks thread synchronization.

CEEOPMD

CEEOPMD destroys the mutex or read-write lock referred to by *lock_object*. Attempting to destroy a locked mutex or read-write lock results in an error condition.

Syntax

void CEEOPMD (*lock_object, [fc]*)

```
CEE_MUTEX   *lock_object;
FEED_BACK    *fc;
```

CEEOPMD
Call this CWI interface as follows:

```
L     R15,CEECAALEOV-CEECAA(,R12)     CAA address is in R12
L     R15,0284(,R15)
BALR  R14,R15
```

lock_object **(input)**
The mutex or read-write lock to be destroyed.

fc **(output/optional)**
The feedback code returned by the service. It indicates the degree of success in destroying the mutex or read-write lock.

The following message identifiers and associated severities can be returned by the service in the feedback code *fc*.

CEE000	Severity	0
	Msg_No	0000
	Message	The service completed successfully.

CEE4S9	Severity	3
	Msg_No	5001
	Message	The service is unavailable unless POSIX(ON) run-time option specified and z/OS UNIX System Services are started.
CEE5I5	Severity	3
	Msg_No	5701
	Message	The pthread_mutex_t object specified by *lock_object* is invalid (not initialized).
CEE5I7	Severity	3
	Msg_No	5703
	Message	Address exception accessing pthread_mutex_t object specified by *lock_object*.
CEE5I8	Severity	4
	Msg_No	5704
	Message	Address exception while referencing storage allocated by mutex initialization for pthread_mutex_t object specified by *lock_object*.
CEE5I9	Severity	3
	Msg_No	5705
	Message	Pthread_mutex_t object specified by *lock_object* is damaged.
CEE5II	Severity	3
	Msg_No	5714
	Message	The pthread_mutex_t object specified by *lock_object* is busy.
CEE5IK	Severity	4
	Msg_No	5716
	Message	Unable to free storage allocated by mutex initialization for pthread_mutex_t object specified by *lock_object*.
CEE5K4	Severity	3
	Msg_No	5764
	Message	The lock object specified by *lock_object* was not initialized.
CEE5K6	Severity	3
	Msg_No	5766
	Message	An addressing exception occurred referencing a lock object.
CEE5K7	Severity	4
	Msg_No	5767
	Message	Address exception while referencing system storage allocated by lock object initialization.
CEE5K8	Severity	3
	Msg_No	5768
	Message	The lock object specified by *lock_object* has been changed since it was initialized.

CEE5KH	Severity	3
	Msg_No	5777
	Message	The lock object specified by *lock_object* was busy.
CEE5KJ	Severity	4
	Msg_No	5779
	Message	System lock storage could not be freed.
CEE5KQ	Severity	3
	Msg_No	5786
	Message	The UNIX callable service BPX1SLK failed during shared lock processing. The system return code was *return_code*, the reason code was *reason_code*, x'00'.

CEEOPMI

CEEOPMI initializes the mutex or read-write lock referred to by *lock_object* with the attributes identified by *attr_object*. If this function fails, the mutex or read-write lock is not initialized and the contents of *lock_object* is undefined.

Syntax

void CEEOPMI (*lock_object, attr_object, lock_type, [fc]*)

```
CEE_MUTEX  *lock_object;
CEE_TOKEN   *attr_object;
INT4        *lock_type;
FEED_BACK   *fc;
```

CEEOPMI

Call this CWI interface as follows:

```
L     R15,CEECAALEOV-CEECAA(,R12)     CAA address is in R12
L     R15,0280(,R15)
BALR  R14,R15
```

lock_object **(input/output)**

The mutex or read-write lock to be initialized.

attr_object **(input)**

The attributes object used to initialize the mutex or read-write lock.

lock_type **(input)**

A full word integer with the following defined values:

- x'00000000' = mutex
- x'00000001' = read-write lock

fc **(output/optional)**

The feedback code returned by the service. It indicates the degree of success in initializing the *lock_object*.

The following message identifiers and associated severities can be returned by the service in the feedback code *fc*.

CEE000	Severity	0
	Msg_No	0000
	Message	The service completed successfully.

CEE4S9	Severity	3
	Msg_No	5001
	Message	The service is unavailable unless POSIX(ON) run-time option specified and z/OS UNIX System Services are started.
CEE5I7	Severity	3
	Msg_No	5703
	Message	Address exception accessing object specified by *lock_object* or *attr_object*.
CEE5I8	Severity	4
	Msg_No	5704
	Message	Address exception while referencing storage allocated by mutex initialization for pthread_mutex_t object specified by *lock_object*.
CEE5IC	Severity	3
	Msg_No	5708
	Message	The pthread_mutex_t object specified by *lock_object* was already initialized.
CEE5ID	Severity	3
	Msg_No	5709
	Message	The pthread_mutexattr_t object specified by *attr_object* is invalid (not initialized).
CEE5IE	Severity	3
	Msg_No	5710
	Message	Insufficient storage to initialize the pthread_mutex_t object specified by *lock_object*.
CEE5IK	Severity	4
	Msg_No	5716
	Message	Unable to free storage allocated by mutex initialization for pthread_mutex_t object specified by *lock_object*.
CEE5IP	Severity	0
	Msg_No	5721
	Message	Insufficient resource to initialize mutex specified by *lock_object*.
CEE5IQ	Severity	0
	Msg_No	5722
	Message	Insufficient privilege to initialize mutex specified by *lock_object*.
CEE5K6	Severity	3
	Msg_No	5766
	Message	An addressing exception occurred referencing a lock object.
CEE5K7	Severity	4
	Msg_No	5767
	Message	Address exception while referencing system storage allocated by lock object initialization.

CEE5KB	Severity	3
	Msg_No	5771
	Message	The pthread_rwlock_t object specified by *lock_object* was already initialized.
CEE5KC	Severity	3
	Msg_No	5772
	Message	The lock attribute object specified by *attr_object* was not initialized.
CEE5KD	Severity	3
	Msg_No	5773
	Message	Insufficient storage to initialize the pthread_rwlock_t object specified by *lock_object*.
CEE5KJ	Severity	4
	Msg_No	5779
	Message	System lock storage could not be freed.
CEE5KO	Severity	0
	Msg_No	5784
	Message	Insufficient resource to initialize another read-write lock specified by *lock_object*.
CEE5KP	Severity	0
	Msg_No	5785
	Message	Insufficient privilege to initialize the read-write lock specified by *lock_object*.
CEE5KQ	Severity	3
	Msg_No	5786
	Message	The UNIX callable service BPX1SLK failed during shared lock processing. The system return code was *return_code*, the reason code was *reason_code*, x'00'.

CEEOPML

CEEOPML acquires (locks) the mutex referred to by *mutex*. If the mutex is already locked by another thread, the calling thread blocks until the mutex becomes available. This function returns with the mutex in the locked state with the calling thread as its owner.

Syntax

void CEEOPML (*mutex, [fc]*)

```
CEE_MUTEX   *mutex;
FEED_BACK   *fc;
```

CEEOPML

Call this CWI interface as follows:

```
L     R15,CEECAALEOV-CEECAA(,R12)     CAA address is in R12
L     R15,0288(,R15)
BALR  R14,R15
```

mutex **(input)**
The mutex to be locked.

fc **(output/optional)**
The feedback code returned by the service. It indicates the degree of success in locking the mutex.

The following message identifiers and associated severities can be returned by the service in the feedback code *fc*.

CEE000	Severity	0
	Msg_No	0000
	Message	The service completed successfully.
CEE4S9	Severity	3
	Msg_No	5001
	Message	The service is unavailable unless POSIX(ON) run-time option specified and z/OS UNIX System Services are started.
CEE5I6	Severity	3
	Msg_No	5702
	Message	The current thread already owns the pthread_mutex_t object specified by *mutex*.
CEE5IO	Severity	4
	Msg_No	5720
	Message	Mutex specified by *mutex* was not locked because thread was forced to terminate.
CEE5IS	Severity	0
	Msg_No	5724
	Message	Not enough resource (other than memory).
CEE5K4	Severity	3
	Msg_No	5764
	Message	The mutex specified by *mutex* was not initialized.
CEE5K6	Severity	3
	Msg_No	5766
	Message	An addressing exception occurred referencing a lock object.
CEE5K7	Severity	4
	Msg_No	5767
	Message	Address exception while referencing system storage allocated by lock object initialization.
CEE5KQ	Severity	3
	Msg_No	5786
	Message	The UNIX callable service BPX1SLK failed during shared lock processing. The system return code was *return_code*, the reason code was *reason_code*, x'00'.

Usage Notes:

1. An attempt by the current owner of a mutex to relock the mutex is allowed if the CEEOPXS service was used to give the mutex the attribute RECURSIVE before the mutex was initialized with the CEEOPMI service. Otherwise, the mutex has (by default) the attribute NONRECURSIVE, and any request to relock it fails.
2. A recursive mutex must be unlocked as many times as it has been locked and relocked to relinquish ownership.
3. Only the owning thread (the thread which acquired a mutex) can unlock it.

CEEOPML2

CEEOPML2 is the C-callable Language Environment interface to the `pthread_mutex_lock()` function.

Syntax

int CEEOPML2 (*mutex*)

```
pthread_mutex_t  *mutex;
```

CEEOPML2

Call this CWI interface as follows:

```
L     R15,CEECAALEOV-CEECAA(,R12)
L     R15,316(,R15)
BALR  R14,R15
```

mutex **(input)**

Identifies the mutex to be locked.

CEEOPML2 can return the following function values:

0 Function completed successfully.

-1 An error occurred; `errno` can be one of the following values:

EINVAL
The specified mutex is not valid.

EDEADLK
The specified mutex is already locked.

EAGAIN
The specified mutex could not be acquired because the maximum number of recursive locks for the mutex has been exceeded.

CEEOPMT

CEEOPMT conditionally acquires (locks) the mutex referred to by *mutex*. Conditionally means the call always returns immediately, whether or not the lock is acquired. If the mutex is already locked, the mutex is not acquired. When successful, this function returns with the mutex in the locked state with the calling thread as its owner.

Syntax

void CEEOPMT (*mutex, [fc]*)

```
CEE_MUTEX   *mutex;
FEED_BACK   *fc;
```

CEEOPMT

Call this CWI interface as follows:

```
L     R15,CEECAALEOV-CEECAA(,R12)     CAA address is in R12
L     R15,0296(,R15)
BALR  R14,R15
```

mutex **(input)**

The mutex to be locked conditionally.

fc **(output/optional)**

The feedback code returned by the service. It indicates the degree of success in locking the mutex conditionally.

The following message identifiers and associated severities can be returned by the service in the feedback code *fc*.

CEE000	Severity	0
	Msg_No	0000
	Message	The service completed successfully.
CEE4S9	Severity	3
	Msg_No	5001
	Message	The service is unavailable unless POSIX(ON) run-time option specified and z/OS UNIX System Services are started.
CEE5I5	Severity	3
	Msg_No	5701
	Message	The pthread_mutex_t object specified by *mutex* is invalid (not initialized).
CEE5I8	Severity	4
	Msg_No	5704
	Message	Address exception while referencing storage allocated by mutex initialization for pthread_mutex_t object specified by *mutex*.
CEE5IB	Severity	0
	Msg_No	5707
	Message	The pthread_mutex_t object specified by *mutex* is busy.
CEE5IO	Severity	4
	Msg_No	5720
	Message	Thread forced by quiesce.
CEE5IS	Severity	0
	Msg_No	5724
	Message	Not enough resource (other than memory).
CEE5K4	Severity	3
	Msg_No	5764
	Message	The mutex specified by *mutex* was not initialized.

CEE5K6	Severity	3
	Msg_No	5766
	Message	An addressing exception occurred referencing a lock object.
CEE5K7	Severity	4
	Msg_No	5767
	Message	Address exception while referencing system storage allocated by lock object initialization.
CEE5KQ	Severity	3
	Msg_No	5786
	Message	The UNIX callable service BPX1SLK failed during shared lock processing. The system return code was *return_code*, the reason code was *reason_code*, x'00'.

Usage Notes:

1. If the CEEOPXS service was used to give the mutex the attribute RECURSIVE before the mutex was initialized with the CEEOPMI service, the thread which locked the mutex can relock it with lock service, CEEOPML, or trylock service, CEEOPMT. In other words, trylock returns with success rather than busy feedback code, if the thread already owns a recursive mutex. Only when the mutex is nonrecursive, which is the default attribute for mutexes, does trylock return the busy feedback code if the mutex is already locked.
2. A recursive mutex must be unlocked as many times as it has been locked and relocked to relinquish ownership.
3. Only the owning thread (the thread that acquired a mutex) can unlock it.
4. The *routine* to be executed was previously established by the `pthread_cleanup_push()` (CEEOPCPO) function.
5. It is assumed that *routine* is currently available and does not require an explicit LOAD performed.

CEEOPMU

CEEOPMU releases a mutex held by the calling thread. A recursive mutex must be unlocked as many times as it has been locked and relocked to relinquish ownership. Only the owning thread (the thread that acquired a mutex) can unlock it.

Syntax

void CEEOPMU (*mutex, [fc]*)

```
CEE_MUTEX   *mutex;
FEED_BACK   *fc;
```

CEEOPMU

Call this CWI interface as follows:

```
L     R15,CEECAALEOV-CEECAA(,R12)     CAA address is in R12
L     R15,0292(,R15)
BALR  R14,R15
```

mutex **(input)**

The mutex to be unlocked.

fc **(output/optional)**
The feedback code returned by the service. It indicates the degree of success in unlocking the mutex.

The following message identifiers and associated severities can be returned by the service in the feedback code *fc*.

CEE000	Severity	0
	Msg_No	0000
	Message	The service completed successfully.
CEE4S9	Severity	3
	Msg_No	5001
	Message	The service is unavailable unless POSIX(ON) run-time option specified and z/OS UNIX System Services are started.
CEE5IA	Severity	3
	Msg_No	5706
	Message	The current thread does not own the pthread_mutex_t object specified by *mutex*.
CEE5K4	Severity	3
	Msg_No	5764
	Message	The mutex specified by *mutex* was not initialized.
CEE5K6	Severity	3
	Msg_No	5766
	Message	An addressing exception occurred referencing a lock object.
CEE5K7	Severity	4
	Msg_No	5767
	Message	Address exception while referencing system storage allocated by lock object initialization.
CEE5KQ	Severity	3
	Msg_No	5786
	Message	The UNIX callable service BPX1SLK failed during shared lock processing. The system return code was *return_code*, the reason code was *reason_code*, x'00'.

CEEOPMU2

CEEOPMU2 is the C-callable Language Environment interface to the `pthread_mutex_unlock()` function.

Syntax

int CEEOPMU2 (*mutex*)

```
pthread_mutex_t  *mutex;
```

CEEOPMU2
Call this CWI interface as follows:

```
L     R15,CEECAALEOV-CEECAA(,R12)
L     R15,320(,R15)
BALR  R14,R15
```

mutex **(input)**
Identifies the mutex to be locked.

CEEOPMU2 can return the following function values:

0 Function completed successfully.

-1 An error occurred; `errno` can be one of the following values:

EINVAL
The specified mutex is not valid.

EPERM
The current thread does not own the mutex.

CEEOPRL

CEEOPRL acquires (locks) the read-write lock for read referred to by *rwlock*. If the read-write lock is already locked for write by another thread, or if there are threads waiting for the read-write lock for write, the calling thread blocks until the read-write lock becomes available. This function returns with the read-write lock in the locked state with the calling thread as its holder.

Syntax

void CEEOPRL (*rwlock, [fc]*)

```
CEE_RWLOCK  *rwlock;
FEED_BACK   *fc;
```

CEEOPRL
Call this CWI interface as follows:

```
L     R15,CEECAALEOV-CEECAA(,R12)     CAA address is in R12
L     R15,0288(,R15)
BALR  R14,R15
```

rwlock **(input)**
The read-write lock to be locked for read.

fc **(output/optional)**
The feedback code returned by the service. It indicates the degree of success in locking the read-write lock for read.

The following message identifiers and associated severities can be returned by the service in the feedback code *fc*.

CEE000	Severity	0
	Msg_No	0000
	Message	The service completed successfully.
CEE4S9	Severity	3
	Msg_No	5001
	Message	The service is unavailable unless POSIX(ON) run-time option specified and z/OS UNIX System Services are started.

CEE5K4	Severity	3
	Msg_No	5764
	Message	The read-write lock specified by the *rwlock* was not initialized.
CEE5K5	Severity	3
	Msg_No	5765
	Message	The read-write lock specified by *rwlock* had already been locked by the same thread for writing. A read-write lock can only be locked for reading multiple times by the same thread.
CEE5K6	Severity	3
	Msg_No	5766
	Message	An addressing exception occurred referencing a lock object.
CEE5K7	Severity	4
	Msg_No	5767
	Message	Address exception while referencing system storage allocated by lock object initialization.
CEE5KN	Severity	4
	Msg_No	5783
	Message	Read-write lock specified by *rwlock* was not locked because thread was forced to terminate.
CEE5KQ	Severity	3
	Msg_No	5786
	Message	The UNIX callable service BPX1SLK failed during shared lock processing. The system return code was *return_code*, the reason code was *reason_code*, x'00'.
CEE5KR	Severity	3
	Msg_No	5787
	Message	Not enough resource (other than memory).
CEE5KU	Severity	3
	Msg_No	5790
	Message	Insufficient storage to lock the read-write lock object specified by *rwlock*.
CEE5KV	Severity	4
	Msg_No	5791
	Message	System read-write lock storage could not be freed.

Usage Notes:

1. Multiple threads will be granted the read-write lock for read if no thread holds the read-write lock for write and no thread is blocked waiting for the read-write lock for write.
2. A read-write lock locked for read must be unlocked as many times as it has been locked and relocked to relinquish ownership.

CEEOPRL2

CEEOPRL2 is the C-callable Language Environment interface to the `pthread_rwlock_rdlock()` function for a read lock.

Syntax

int CEEOPRL2 (*rwlock*)

```
pthread_rwlock_t  *rwlock;
```

CEEOPRL2

Call this CWI interface as follows:

```
L     R15,CEECAALEOV-CEECAA(,R12)
L     R15,520(,R15)
BALR  R14,R15
```

rwlock **(input)**

Identifies the read-write lock to be locked for read.

CEEOPRL2 can return the following function values:

0 Function completed successfully.

-1 An error occurred; `errno` can be one of the following values:

EINVAL
The specified read-write lock is not valid.

EDEADLK
The specified read-write lock is already locked.

EAGAIN
The specified read-write lock could not be acquired because the maximum number of recursive locks for the read-write lock has been exceeded.

ENOMEM
Not enough memory to acquire a lock.

CEEOPRT

CEEOPRT conditionally acquires (locks) the read-write lock for read referred to by *rwlock*. Conditionally means the call always returns immediately, whether or not the lock is acquired. If the read-write lock is already locked for write, or if there are threads waiting for the read-write lock for write, the read-write lock is not acquired. The exception is when the calling thread has already locked the read-write lock for read, in which case it will still acquire the lock. When successful, this function returns with the read-write lock in the locked state with the calling thread as its owner.

Note: Only the owning thread (the thread that acquired a read-write lock) can unlock it.

Syntax

void CEEOPRT (*rwlock, [fc]*)

```
CEE_RWLOCK  *rwlock;
FEED_BACK   *fc;
```

CEEOPRT

Call this CWI interface as follows:

```
L     R15,CEECAALEOV-CEECAA(,R12)     CAA address is in R12
L     R15,01F8(,R15)
BALR  R14,R15
```

rwlock **(input)**
The read-write lock to be locked for read conditionally.

fc **(output/optional)**
The feedback code returned by the service. It indicates the degree of success in locking the read-write lock for read conditionally.

The following message identifiers and associated severities can be returned by the service in the feedback code *fc*.

CEE000	Severity	0
	Msg_No	0000
	Message	The service completed successfully.
CEE4S9	Severity	3
	Msg_No	5001
	Message	The service is unavailable unless POSIX(ON) run-time option specified and z/OS UNIX System Services are started.
CEE5K4	Severity	3
	Msg_No	5764
	Message	The read-write lock specified by the *rwlock* was not initialized.
CEE5K6	Severity	3
	Msg_No	5766
	Message	An addressing exception occurred referencing a lock object.
CEE5K7	Severity	4
	Msg_No	5767
	Message	Address exception while referencing system storage allocated by lock object initialization.
CEE5KN	Severity	4
	Msg_No	5783
	Message	Read-write lock specified by *rwlock* was not locked because thread was forced to terminate.
CEE5KQ	Severity	3
	Msg_No	5786
	Message	The UNIX callable service BPX1SLK failed during shared lock processing. The system return code was *return_code*, the reason code was *reason_code*, x'00'.
CEE5KR	Severity	3
	Msg_No	5787
	Message	Not enough resource (other than memory).
CEE5KS	Severity	3
	Msg_No	5788
	Message	The read-write lock specified by *rwlock* was busy.

CEE5KU	Severity	3
	Msg_No	5790
	Message	Insufficient storage to lock the read-write lock object specified by *rwlock*.
CEE5KV	Severity	4
	Msg_No	5791
	Message	System read-write lock storage could not be freed.

Usage Notes:

1. The *routine* to be executed was previously established by the `pthread_cleanup_push()` (CEEOPCPO) function.
2. It is assumed that *routine* is currently available and does not require an explicit LOAD performed.

CEEOPRU

CEEOPRU releases a read-write lock held by the calling thread. A read-write lock must be unlocked as many times as it has been locked, and relocked to relinquish ownership. Only the holding thread (the thread that acquired a read-write lock) can unlock it.

Syntax

void CEEOPRU (*rwlock, [fc]*)

```
CEE_RWLOCK   *rwlock;
FEED_BACK    *fc;
```

CEEOPRU

Call this CWI interface as follows:

```
L     R15,CEECAALEOV-CEECAA(,R12)     CAA address is in R12
L     R15,0292(,R15)
BALR  R14,R15
```

rwlock **(input)**

The read-write lock that was locked, to be unlocked.

fc **(output/optional)**

The feedback code returned by the service. It indicates the degree of success in unlocking the read-write lock.

The following message identifiers and associated severities can be returned by the service in the feedback code *fc*.

CEE000	Severity	0
	Msg_No	0000
	Message	The service completed successfully.
CEE4S9	Severity	3
	Msg_No	5001
	Message	The service is unavailable unless POSIX(ON) run-time option specified and z/OS UNIX System Services are started.

CEE5K4	Severity	3
	Msg_No	5764
	Message	The read-write lock specified by the *rwlock* was not initialized.
CEE5K6	Severity	3
	Msg_No	5766
	Message	An addressing exception occurred referencing a lock object.
CEE5K7	Severity	4
	Msg_No	5767
	Message	Address exception while referencing system storage allocated by lock object initialization.
CEE5KN	Severity	4
	Msg_No	5783
	Message	Read-write lock specified by *rwlock* was not locked because thread was forced to terminate.
CEE5KQ	Severity	3
	Msg_No	5786
	Message	The UNIX callable service BPX1SLK failed during shared lock processing. The system return code was *return_code*, the reason code was *reason_code*, x'00'.
CEE5KU	Severity	3
	Msg_No	5790
	Message	Insufficient storage to lock the read-write lock object specified by *rwlock*.
CEE5KV	Severity	4
	Msg_No	5791
	Message	System read-write lock storage could not be freed.

CEEOPRU2

CEEOPRU2 is the C-callable Language Environment interface to the `pthread_rwlock_unlock()` function.

Syntax

int CEEOPRU2 (*rwlock*)

```
pthread_rwlock_t  *rwlock;
```

CEEOPRU2

Call this CWI interface as follows:

```
L     R15,CEECAALEOV-CEECAA(,R12)
L     R15,528(,R15)
BALR  R14,R15
```

rwlock **(input)**

Identifies the read-write lock that was locked, to be unlocked.

CEEOPRU2 can return the following function values:

0 Function completed successfully.

-1 An error occurred; `errno` can be one of the following values:

EINVAL
The specified read-write lock is not valid.

EPERM
The current thread does not own the read-write lock object.

ENOMEM
There is not enough memory during the unlock process.

CEEOPWL

CEEOPWL acquires (locks) the read-write lock for write referred to by *rwlock.* If the read-write lock is already locked by another thread or threads, the calling thread blocks until the read-write lock becomes available. This function returns with the read-write lock in the locked state with the calling thread as a holder.

Syntax

void CEEOPWL (*rwlock, [fc]*)

```
CEE_RWLOCK  *rwlock;
FEED_BACK   *fc;
```

CEEOPWL

Call this CWI interface as follows:

```
L     R15,CEECAALEOV-CEECAA(,R12)     CAA address is in R12
L     R15,0288(,R15)
BALR  R14,R15
```

rwlock **(input)**
The read-write lock to be locked for write.

fc **(output/optional)**
The feedback code returned by the service. It indicates the degree of success in locking the read-write lock for write.

The following message identifiers and associated severities can be returned by the service in the feedback code *fc*.

CEE000	Severity	0
	Msg_No	0000
	Message	The service completed successfully.
CEE4S9	Severity	3
	Msg_No	5001
	Message	The service is unavailable unless POSIX(ON) run-time option specified and z/OS UNIX System Services are started.
CEE5K4	Severity	3
	Msg_No	5764
	Message	The read-write lock specified by the *rwlock* was not initialized.

CEE5K6	Severity	3
	Msg_No	5766
	Message	An addressing exception occurred referencing a lock object.
CEE5K7	Severity	4
	Msg_No	5767
	Message	Address exception while referencing system storage allocated by lock object initialization.
CEE5KA	Severity	3
	Msg_No	5770
	Message	The read-write lock specified by *rwlock* has already been locked by the thread. A read-write lock can only be locked for reading multiple times by the same thread.
CEE5KN	Severity	4
	Msg_No	5783
	Message	Read-write lock specified by *rwlock* was not locked because thread was forced to terminate.
CEE5KQ	Severity	3
	Msg_No	5786
	Message	The UNIX callable service BPX1SLK failed during shared lock processing. The system return code was *return_code*, the reason code was *reason_code*, x'00'.
CEE5KU	Severity	3
	Msg_No	5790
	Message	Insufficient storage to lock the read-write lock object specified by *rwlock*.
CEE5KV	Severity	4
	Msg_No	5791
	Message	System read-write lock storage could not be freed.

Usage Notes:

1. An attempt by the current holder of a read-write lock for write or read to relock the read-write lock for write will cause a deadlock.
2. A read-write lock must be unlocked as many times as it has been locked, and relocked to relinquish ownership.
3. Only the holding thread (the thread which acquired a read-write lock for write) can unlock it.

CEEOPWL2

CEEOPWL2 is the C-callable Language Environment interface to the `pthread_rwlock_wrlock()` function for a write lock.

Syntax

int CEEOPWL2 (*rwlock*)

```
pthread_rwlock_t  *rwlock;
```

CEEOPWL2
Call this CWI interface as follows:

```
L     R15,CEECAALEOV-CEECAA(,R12)
L     R15,524(,R15)
BALR  R14,R15
```

rwlock **(input)**
Identifies the read-write lock to be locked for write.

CEEOPWL2 can return the following function values:

0 Function completed successfully.

-1 An error occurred; `errno` is set to one of the following values:

EINVAL
The specified read-write lock is not valid.

EDEADLK
The specified read-write lock is already locked for write.

ENOMEM
Not enough memory to acquire a lock.

CEEOPWT

CEEOPWT conditionally acquires (locks) the read-write lock for write referred to by *rwlock*. Conditionally means the call always returns immediately, whether or not the lock is acquired. If the read-write lock is already locked, the read-write lock is not acquired. When successful, this function returns with the read-write lock in the locked state with the calling thread as its owner.

Note: Only the owning thread (the thread that acquired a read-write lock) can unlock it.

Syntax

void CEEOPWT (*rwlock, [fc]*)

```
CEE_RWLOCK   *rwlock;
FEED_BACK    *fc;
```

CEEOPWT
Call this CWI interface as follows:

```
L     R15,CEECAALEOV-CEECAA(,R12)     CAA address is in R12
L     R15,0200(,R15)
BALR  R14,R15
```

rwlock **(input)**
The read-write lock to be locked for write conditionally.

fc **(output/optional)**
The feedback code returned by the service. It indicates the degree of success in locking the read-write lock for write conditionally.

The following message identifiers and associated severities can be returned by the service in the feedback code *fc*.

CEE000	Severity	0
	Msg_No	0000
	Message	The service completed successfully.

CEE4S9	Severity	3
	Msg_No	5001
	Message	The service is unavailable unless POSIX(ON) run-time option specified and z/OS UNIX System Services are started.
CEE5K4	Severity	3
	Msg_No	5764
	Message	The read-write lock specified by the *rwlock* was not initialized.
CEE5K6	Severity	3
	Msg_No	5766
	Message	An addressing exception occurred referencing a lock object.
CEE5K7	Severity	4
	Msg_No	5767
	Message	Address exception while referencing system storage allocated by lock object initialization.
CEE5KN	Severity	4
	Msg_No	5783
	Message	Read-write lock specified by *rwlock* was not locked because thread was forced to terminate.
CEE5KQ	Severity	3
	Msg_No	5786
	Message	The UNIX callable service BPX1SLK failed during shared lock processing. The system return code was *return_code*, the reason code was *reason_code*, x'00'.
CEE5KT	Severity	1
	Msg_No	5785
	Message	The read-write lock specified by *rwlock* was busy.
CEE5KU	Severity	3
	Msg_No	5790
	Message	Insufficient storage to lock the read-write lock object specified by *rwlock*.
CEE5KV	Severity	4
	Msg_No	5791
	Message	System read-write lock storage could not be freed.

Usage Notes:

1. The *routine* to be executed was previously established by the `pthread_cleanup_push()` (CEEOPCPO) function.
2. It is assumed that *routine* is currently available and does not require an explicit LOAD performed.

CEEOPXD

CEEOPXD destroys a mutex attributes object or read-write lock attributes object.

Syntax

void CEEOPXD (*attr_object, [fc]*)

```
CEE_TOKEN    *attr_object;
FEED_BACK    *fc;
```

CEEOPXD

Call this CWI interface as follows:

```
L     R15,CEECAALEOV-CEECAA(,R12)     CAA address is in R12
L     R15,0328(,R15)
BALR  R14,R15
```

attr_object **(input/output)**

The location that contains the token of an initialized mutex attributes or read-write lock attributes object.

fc **(output/optional)**

The feedback code returned by the service. It indicates the degree of success in deleting the mutex attributes or read-write lock attributes object.

The following message identifiers and associated severities can be returned by the service in the feedback code *fc*.

CEE000	Severity	0
	Msg_No	0000
	Message	The service completed successfully.
CEE4S9	Severity	3
	Msg_No	5001
	Message	The service is unavailable unless POSIX(ON) run-time option specified and z/OS UNIX System Services are started.
CEE5I7	Severity	3
	Msg_No	5703
	Message	Address exception accessing pthread_mutexattr_t object specified by *attr_object*.
CEE5I8	Severity	4
	Msg_No	5704
	Message	Address exception while referencing storage allocated by mutex initialization for pthread_mutex_t object specified by *attr_object*.
CEE5ID	Severity	3
	Msg_No	5709
	Message	The pthread_mutexattr_t object specified by *attr_object* was not initialized.
CEE5IF	Severity	3
	Msg_No	5711
	Message	The pthread_mutexattr_t object specified by *attr_object* has been changed since it was initialized.

CEE5IL	Severity	4
	Msg_No	5717
	Message	Unable to free storage allocated by mutex attribute initialization for pthread_mutexattr_t object specified by *attr_object*.
CEE5K6	Severity	3
	Msg_No	5766
	Message	An addressing exception occurred referencing a lock attribute object.
CEE5K7	Severity	4
	Msg_No	5767
	Message	An addressing exception occurred referencing system storage allocated by lock attributes object initialization.
CEE5KC	Severity	3
	Msg_No	5772
	Message	The lock attribute object specified by *attr_object* was not initialized.
CEE5KE	Severity	3
	Msg_No	5774
	Message	A pthread_rwlockattr_t object specified by *attr_object* has been changed since it was initialized
CEE5KK	Severity	4
	Msg_No	5780
	Message	Unable to free storage allocated by lock attribute initialization for attributes object specified by *attr_object*.

CEEOPXG

CEEOPXG returns an integer value indicating mutex or read-write lock attributes specified by a mutex or read-write lock attributes object. For attribute values, see “CEEOPXS” on page 541.

Syntax

void CEEOPXG (*attr_object, attr_value, call_type, [fc]*)

```
CEE_TOKEN    *attr_object;
INT4         *attr_value;
INT4         *call_type;
FEED_BACK    *fc;
```

CEEOPXG

Call this CWI interface as follows:

```
L     R15,CEECAALEOV-CEECAA(,R12)     CAA address is in R12
L     R15,0332(,R15)
BALR  R14,R15
```

attr_object **(input/output)**

The location that contains the token of an initialized attributes object.

attr_value **(output)**
The location that will contain values specifying mutex or read-write lock attributes. The values returned are described under “CEEOPXS” on page 541, the description of *new_attr_value*.

call_type **(input)**
A full word integer with the following defined values:

- x’00000001’ = settype (setkind_np) attributes for private
- x’00000002’ = setpshared attributes for shared.

fc **(output/optional)**
The feedback code returned by the service. It indicates the degree of success in interrogating the mutex or read-write lock attributes object.

Note: call_type values can be combined, so that x’00000003’ would indicate that both settype and setpshared values may be changed.

The following message identifiers and associated severities can be returned by the service in the feedback code *fc*.

CEE000	Severity	0
	Msg_No	0000
	Message	The service completed successfully.
CEE4S9	Severity	3
	Msg_No	5001
	Message	This service is unavailable unless POSIX(ON) run-time option specified and z/OS UNIX System Services are started.
CEE5I8	Severity	4
	Msg_No	5704
	Message	Address exception while referencing storage allocated by mutex attribute initialization for pthread_mutexattr_t object specified by *attr_object*.
CEE5ID	Severity	3
	Msg_No	5709
	Message	The pthread_mutexattr_t object specified by *attr_object* is invalid (not initialized).
CEE5IJ	Severity	3
	Msg_No	5715
	Message	Address exception attempting to store attribute value at return address specified by *attr_value*.
CEE5IM	Severity	4
	Msg_No	5718
	Message	Valid attribute value for pthread_mutexattr_t object specified by *attr_object* not found in attribute object storage.
CEE5K7	Severity	4
	Msg_No	5767
	Message	An addressing exception occurred referencing system storage allocated by lock attributes object initialization.

CEE5KC	Severity	3
	Msg_No	5772
	Message	The lock attribute object specified by *attr_object* was not initialized.
CEE5KI	Severity	3
	Msg_No	5778
	Message	Address exception attempting to store attribute value at return address specified by *attr_value*.
CEE5KL	Severity	4
	Msg_No	5781
	Message	Valid lock attribute value for lock attribute object specified by *attr_object* not found in lock attribute storage.

CEEOPXI

CEEOPXI initializes the mutex attributes or read-write lock attributes object specified by *attr_object*. Upon successful completion of this function, the attributes object is set to this implementation's default.

For attribute values, see "CEEOPXS" on page 541.

Syntax

void CEEOPXI (*attr_object, lock_type, [fc]*)

```
CEE_TOKEN    *attr_object;
INT4         *lock_type;
FEED_BACK    *fc;
```

CEEOPXI

Call this CWI interface as follows:

```
L     R15,CEECAALEOV-CEECAA(,R12)     CAA address is in R12
L     R15,0324(,R15)
BALR  R14,R15
```

attr_object **(input)**

The location of the caller-provided attributes object.

lock_type **(input)**

A full word integer with the following defined values:

- x'00000000' = mutex
- x'00000001' = read-write lock

fc **(output/optional)**

The feedback code returned by the service. It indicates the degree of success in initializing the new attributes object.

The following message identifiers and associated severities can be returned by the service in the feedback code *fc*.

CEE000	Severity	0
	Msg_No	0000
	Message	The service completed successfully.

CEE4S9	Severity	3
	Msg_No	5001
	Message	The service is unavailable unless POSIX(ON) run-time option specified and z/OS UNIX System Services are started.
CEE5I7	Severity	3
	Msg_No	5703
	Message	Address exception accessing pthread_mutexattr_t object specified by *attr_object*.
CEE5I8	Severity	4
	Msg_No	5704
	Message	Address exception while referencing storage allocated by mutex attribute initialization for pthread_mutexattr_t object specified by *attr_object*.
CEE5IG	Severity	3
	Msg_No	5712
	Message	The pthread_mutexattr_t object specified by *attr_object* was already initialized.
CEE5IH	Severity	3
	Msg_No	5713
	Message	Insufficient storage to initialize the pthread_mutexattr_t object specified by *attr_object*.
CEE5IL	Severity	4
	Msg_No	5717
	Message	Unable to free storage allocated by mutex attribute initialization for pthread_mutexattr_t object specified by *attr_object*.
CEE5K6	Severity	3
	Msg_No	5766
	Message	An addressing exception occurred referencing a lock attribute object.
CEE5K7	Severity	4
	Msg_No	5767
	Message	An addressing exception occurred referencing system storage allocated by lock attributes object initialization.
CEE5KF	Severity	3
	Msg_No	5775
	Message	The pthread_rwlockattr_t object specified by *attr_object* was already initialized.
CEE5KG	Severity	3
	Msg_No	5776
	Message	Insufficient storage to initialize the pthread_rwlockattr_t object specified by *attr_object*.

CEE5KK	Severity	4
	Msg_No	5780
	Message	Unable to free storage allocated by lock attribute initialization for attributes object specified by *attr_object*.

CEEOPXS

CEEOPXS changes the mutex or read-write lock attributes specified by a mutex attributes object or read-write lock attributes object. For each attribute pair described below a default is listed. This is the default resulting from calling CEEOPXI to initialize the attribute object prior to using CEEOPXS to change any attribute value. Valid attributes are:

RECURSIVE
If a mutex object is initialized with an attribute object which has been assigned the attribute RECURSIVE, the mutex is given the attribute RECURSIVE. A thread can lock and relock a recursive mutex any number of times. However, only the thread owning the recursive mutex can relock it, and only the thread owning the recursive mutex can unlock it. A recursive mutex must be unlocked as many times as it is locked, and relocked to relinquish ownership.

The default attribute for a read-write lock is recursive. Unlike a mutex, more than one thread may lock and relock a read-write lock so long as it is only locked for read. For read-write locks, only the RECURSIVE attribute is supported.

NONRECURSIVE
The default attribute for a mutex is nonrecursive. If a thread attempts to relock a nonrecursive mutex that it owns (has already locked), the lock request fails.

A read-write lock is by definition recursive and never should be changed to nonrecursive.

DEBUG
State changes to this mutex or read-write lock should be reported to the debug interface. For mutexes, the default is DEBUG.

NODEBUG
State changes to this mutex or read-write lock should *not* be reported to the debug interface even though it is present. For read-write locks the default is NODEBUG. For read-write locks only the NODEBUG attribute is supported.

ERRORCHECK
Prior to increasing the lock object count, determine if increasing the count would result in an error condition. For both mutexes and read-write locks, the default is ERRORCHECK.

NOERRORCHECK
No checking for error conditions is done. NOERRORCHECK can only be set for mutexes.

PRIVATE
The mutex or read-write lock will reside in local memory. The default for mutexes and read-write locks is PRIVATE.

SHARED
The mutex or read-write lock will reside in shared memory.

Syntax

void CEEOPXS (*attr_object, new_attr_value, call_type, [fc]*)

```
CEE_TOKEN    *attr_object;
INT4         *new_attr_value;
INT4         *call_type;
FEED_BACK    *fc;
```

CEEOPXS

Call this CWI interface as follows:

```
L     R15,CEECAALEOV-CEECAA(,R12)     CAA address is in R12
L     R15,0336(,R15)
BALR  R14,R15
```

attr_object **(input/output)**

The location that contains the token of an initialized attributes object.

new_attr_value **(input/output)**

The location of a value specifying a mutex or read-write lock attribute.

Valid values for the low order 16 bits of *new_attr_value* are:

Settype: For *pthread_mutexattr_setkind_np* (pthread_mutexattr_settype):

0 NONRECURSIVE+DEBUG+ERRORCHECK
1 RECURSIVE+DEBUG+ERRORCHECK
2 NONRECURSIVE+NODEBUG+ERRORCHECK
3 RECURSIVE+NODEBUG+ERRORCHECK
4 NONRECURSIVE+DEBUG+NOERRORCHECK
5 RECURSIVE+DEBUG+NOERRORCHECK
6 NONRECURSIVE+NODEBUG+NOERRORCHECK
7 RECURSIVE+NODEBUG+NOERRORCHECK

Setpshared: For *pthread_mutexattr_setpshared* (and pthread_rwlockattr_setpshared):

0 PRIVATE
8 SHARED

The value for the high order 16 bits of *new_attr_value* must be zero.

call_type **(input)**

A full word integer with the following defined values:

- x'00000001' = settype (setkind_np) attributes for private
- x'00000002' = setpshared attributes for shared.

fc **(output/optional)**

The feedback code returned by the service. It indicates the degree of success in setting the mutex or read-write lock attributes object.

Note: call_type values can be combined, so that x'00000003' would indicate that both settype and setpshared values may be changed.

The following message identifiers and associated severities can be returned by the service in the feedback code *fc*.

CEE000	Severity	0
	Msg_No	0000
	Message	The service completed successfully.

CEE4S9	Severity	3
	Msg_No	5001
	Message	The service is unavailable unless POSIX(ON) run-time option specified and z/OS UNIX System Services are started.
CEE5I8	Severity	4
	Msg_No	5704
	Message	Address exception while referencing storage allocated by mutex attribute initialization for pthread_mutexattr_t object specified by *attr_object*.
CEE5ID	Severity	3
	Msg_No	5709
	Message	The pthread_mutexattr_t object specified by *attr_object* is invalid (not initialized).
CEE5IN	Severity	3
	Msg_No	5719
	Message	The attribute value specified by *new_attr_value* is invalid.
CEE5K7	Severity	4
	Msg_No	5767
	Message	An addressing exception occurred referencing system storage allocated by lock attributes object initialization.
CEE5KC	Severity	3
	Msg_No	5772
	Message	The lock attribute object specified by *attr_object* was not initialized.
CEE5KM	Severity	3
	Msg_No	5782
	Message	The lock attribute value specified by *new_attr_value* was invalid.

Thread Synchronization — Condition Variables

The CWIs in this section support POSIX condition variables thread synchronization functions.

CEEOPCB

CEEOPCB unblocks all threads (if any) that are waiting (blocked) on the condition object referred to by *cond*. This call has no effect if there are no threads waiting on the condition object.

Syntax

void CEEOPCB (*cond, [fc]*)

```
CEE_TOKEN    *cond;
FEED_BACK    *fc;
```

CEEOPCB

Call this CWI interface as follows:

```
L     R15,CEECAALEOV-CEECAA(,R12)     CAA address is in R12
L     R15,0224(,R15)
BALR  R14,R15
```

cond **(input)**

The condition object on which other threads can be blocked.

fc **(output/optional)**

The feedback code returned by the service. It indicates the degree of success in signaling the condition.

The following message identifiers and associated severities can be returned by the service in the feedback code *fc*.

CEE000	Severity	0
	Msg_No	0000
	Message	The service completed successfully.
CEE4S9	Severity	3
	Msg_No	5001
	Message	The service is unavailable unless POSIX(ON) run-time option specified and z/OS UNIX System Services are started.
CEE5IU	Severity	3
	Msg_No	5726
	Message	The condition object specified by *cond* is not initialized.
CEE5IV	Severity	3
	Msg_No	5727
	Message	Unexpected return code from z/OS UNIX condition post, BPX1CPO, callable service.
CEE5J0	Severity	4
	Msg_No	5728
	Message	Address exception while referencing storage allocated by condition initialization for cond_t object specified by *cond*.
CEE5J3	Severity	3
	Msg_No	5731
	Message	Unexpected return code from z/OS UNIX condition setup, BPX1CSE, callable service.

CEEOPCD

CEEOPCD destroys the condition object specified by *cond*. Attempting to destroy a condition object associated with threads in condition wait or timed wait results in an error condition.

Syntax

void CEEOPCD (*cond, [fc]*)

```
CEE_COND     *cond;
FEED_BACK    *fc;
```

CEEOPCD

Call this CWI interface as follows:

```
L     R15,CEECAALEOV-CEECAA(,R12)     CAA address is in R12
L     R15,0216(,R15)
BALR  R14,R15
```

cond **(input)**

The condition object to be destroyed.

fc **(output/optional)**

The feedback code returned by the service. It indicates the degree of success in destroying the condition object.

The following message identifiers and associated severities can be returned by the service in the feedback code *fc*.

CEE000	Severity	0
	Msg_No	0000
	Message	The service completed successfully.
CEE4S9	Severity	3
	Msg_No	5001
	Message	The service is unavailable unless POSIX(ON) run-time option specified and z/OS UNIX System Services are started.
CEE5IU	Severity	3
	Msg_No	5726
	Message	The cond_t object specified by *cond* is invalid (not initialized).
CEE5J0	Severity	4
	Msg_No	5728
	Message	Address exception while referencing storage allocated by condition initialization for cond_t object specified by *cond*.
CEE5JC	Severity	3
	Msg_No	5740
	Message	Address exception accessing cond_t object specified by *cond*.
CEE5JH	Severity	4
	Msg_No	5745
	Message	Unable to free storage allocated by condition initialization for cond_t object specified by *cond*.

CEE5JJ	Severity	3
	Msg_No	5747
	Message	The cond_t object specified by *cond* is busy.
CEE5JK	Severity	3
	Msg_No	5748
	Message	Cond_t object specified by *cond* is damaged.

CEEOPCI

CEEOPCI initializes the condition object referred to by *cond* with the attributes identified by *condattr*. If this function fails, the condition object is not initialized and the contents of *cond* are undefined. If a condition attribute object is not specified, default condition attributes are used.

Syntax

void CEEOPCI (*cond, condattr, [fc]*)

```
CEE_COND     *cond;
CEE_TOKEN    *condattr;
FEED_BACK    *fc;
```

CEEOPCI

Call this CWI interface as follows:

```
L     R15,CEECAALEOV-CEECAA(,R12)     CAA address is in R12
L     R15,0212(,R15)
BALR  R14,R15
```

cond **(input/output)**

The condition object to be initialized.

condattr **(input/optional)**

The condition attributes object used to initialize the condition object.

fc **(output/optional)**

The feedback code returned by the service. It indicates the degree of success in initializing the condition object.

The following message identifiers and associated severities can be returned by the service in the feedback code *fc*.

CEE000	Severity	0
	Msg_No	0000
	Message	The service completed successfully.
CEE4S9	Severity	3
	Msg_No	5001
	Message	The service is unavailable unless POSIX(ON) run-time option specified and z/OS UNIX System Services are started.
CEE5J0	Severity	4
	Msg_No	5728
	Message	Address exception while referencing storage allocated by initialization for object specified by *cond* or *condattr*.

CEE5JC	Severity	3
	Msg_No	5740
	Message	Address exception accessing object specified by *cond* or condattr.
CEE5JE	Severity	3
	Msg_No	5742
	Message	The cond_t object specified by *cond* is already initialized.
CEE5JF	Severity	3
	Msg_No	5743
	Message	The condattr_t object specified by *condattr* is invalid (not initialized).
CEE5JG	Severity	3
	Msg_No	5744
	Message	Insufficient storage to initialize the cond_t object specified by *cond*.
CEE5JH	Severity	4
	Msg_No	5745
	Message	Unable to free storage allocated by condition initialization for cond_t object specified by *cond*.

CEEOPCS

CEEOPCS unblocks at least one of the threads (if any) that are waiting (blocked) on the condition object referred to by *cond*. This call has no effect if there are no threads waiting on the condition object.

Syntax

void CEEOPCS (*cond, [fc]*)

```
CEE_TOKEN    *cond;
FEED_BACK    *fc;
```

CEEOPCS

Call this CWI interface as follows:

```
L     R15,CEECAALEOV-CEECAA(,R12)     CAA address is in R12
L     R15,0220(,R15)
BALR  R14,R15
```

cond **(input)**

The condition object on which other threads can be blocked.

fc **(output/optional)**

The feedback code returned by the service. It indicates the degree of success in signaling the condition.

The following message identifiers and associated severities can be returned by the service in the feedback code *fc*.

CEE000	Severity	0
	Msg_No	0000
	Message	The service completed successfully.
CEE4S9	Severity	3
	Msg_No	5001
	Message	The service is unavailable unless POSIX(ON) run-time option specified and z/OS UNIX System Services are started.
CEE5IU	Severity	3
	Msg_No	5726
	Message	The condition object specified by *cond* is not initialized.
CEE5IV	Severity	3
	Msg_No	5727
	Message	Unexpected return code from z/OS UNIX condition post, BPX1CPO, callable service.
CEE5J0	Severity	4
	Msg_No	5728
	Message	Address exception while referencing storage allocated by condition initialization for cond_t object specified by *cond*.
CEE5J3	Severity	3
	Msg_No	5731
	Message	Unexpected return code from z/OS UNIX condition setup, BPX1CSE, callable service.

CEEOPCT

This function is same as the CEEOPCW function, except that an error is returned if the absolute time specified by *tv_sec* and *tv_nsec* passes before the condition specified by *cond* is signaled. The associated mutex is reacquired before return.

Syntax

void CEEOPCT (*cond, mutex, tv_sec, tv_nsec, [fc]*)

```
CEE_TOKEN    *cond;
CEE_MUTEX    *mutex;
INT4         *tv_sec;
INT4         *tv_nsec;
FEED_BACK    *fc;
```

CEEOPCT

Call this CWI interface as follows:

```
L     R15,CEECAALEOV-CEECAA(,R12)     CAA address is in R12
L     R15,0232(,R15)
BALR  R14,R15
```

cond **(input)**

The condition variable to wait on.

mutex **(input)**
The associated locked mutex.

tv_sec **(input)**
Specifies time in seconds from midnight, January 1, 1970 UTC when CEEOPCT should cease wait for a condition signal. The value specified must be greater than zero (0) and less than 2,147,483,648 seconds. If a positive value is specified and is less than or equal to current calendar time expressed seconds from midnight, January 1, 1970 UTC, CEEOPCT returns immediately, thus indicating that the time to wait has elapsed.

tv_nsec **(input)**
Specifies time in nanoseconds to be added to *tv_sec* to determine when CEEOPCT should cease wait for a condition signal. The value specified must be greater than or equal to zero (0) and less than 1,000,000,000 (1,000 million).

fc **(output/optional)**
The feedback code returned by the service. It indicates the degree of success in waiting for the condition variable.

The following message identifiers and associated severities can be returned by the service in the feedback code *fc*.

CEE000	Severity	0
	Msg_No	0000
	Message	The service completed successfully.
CEE4S9	Severity	3
	Msg_No	5001
	Message	The service is unavailable unless POSIX(ON) run-time option specified and z/OS UNIX System Services are started.
CEE5I5	Severity	3
	Msg_No	5701
	Message	The mutex specified by *mutex* is not initialized.
CEE5I8	Severity	4
	Msg_No	5704
	Message	Address exception while referencing storage allocated by mutex initialization for pthread_mutex_t object specified by *mutex*.
CEE5IA	Severity	3
	Msg_No	5706
	Message	The mutex specified by *mutex* is not owned by the calling thread.
CEE5IO	Severity	4
	Msg_No	5720
	Message	Mutex specified by *mutex* not reacquired after condition wait terminated because thread was forced to terminate.

CEE5IU	Severity	3
	Msg_No	5726
	Message	The condition variable specified by *cond* is not initialized.
CEE5J0	Severity	4
	Msg_No	5728
	Message	Address exception while referencing storage allocated by condition initialization for cond_t object specified by *cond*.
CEE5J1	Severity	3
	Msg_No	5729
	Message	The mutex specified by *mutex* is a recursive mutex.
CEE5J2	Severity	3
	Msg_No	5730
	Message	A mutex other than the mutex specified by *mutex* is already associated with the condition specified by *cond*.
CEE5J3	Severity	3
	Msg_No	5731
	Message	Unexpected return code from z/OS UNIX condition setup, BPX1CSE, callable service.
CEE5J5	Severity	3
	Msg_No	5731
	Message	The value specified by *tv_sec* is invalid.
CEE5J6	Severity	3
	Msg_No	5734
	Message	The value specified by *tv_nsec* is invalid.
CEE5J7	Severity	3
	Msg_No	5735
	Message	System time of day clock is invalid.
CEE5J8	Severity	1
	Msg_No	5736
	Message	The time specified by *tv_sec* and *tv_nsec* to wait for condition signal has passed.
CEE5J9	Severity	3
	Msg_No	5737
	Message	Unexpected return code from condition timedwait, BPX1CTW or BPX1STE, callable service.

Note: The Language Environment date/time services can be used to obtain the needed number of seconds for the *abstime*. The user needs to obtain the number of seconds from 00:00:00 14 Oct 1585 until 00:00:00 1 Jan 1970. When calculated, that time can be saved and used to determine the absolute time.

CEEOPCW

CEEOPCW blocks the calling thread until another thread calls the condition signal or broadcast service specifying the same condition object *cond*. CEEOPCW releases the associated mutex object *mutex* before blocking the thread. Before returning to the caller, CEEOPCW reacquires (locks) the mutex again.

Syntax

void CEEOPCW (*cond, mutex, [fc]*)

```
CEE_TOKEN    *cond;
CEE_MUTEX    *mutex;
FEED_BACK    *fc;
```

CEEOPCW

Call this CWI interface as follows:

```
L     R15,CEECAALEOV-CEECAA(,R12)     CAA address is in R12
L     R15,0228(,R15)
BALR  R14,R15
```

cond **(input)**

The condition object to wait on.

mutex **(input)**

The associated locked mutex.

fc **(output/optional)**

The feedback code returned by the service. It indicates the degree of success in waiting for the condition variable.

The following message identifiers and associated severities can be returned by the service in the feedback code *fc*.

CEE000	Severity	0
	Msg_No	0000
	Message	The service completed successfully.
CEE4S9	Severity	3
	Msg_No	5001
	Message	The service is unavailable unless POSIX(ON) run-time option specified and z/OS UNIX System Services are started.
CEE5I5	Severity	3
	Msg_No	5701
	Message	The mutex specified by *mutex* is not initialized.
CEE5I8	Severity	4
	Msg_No	5704
	Message	Address exception while referencing storage allocated by condition initialization for pthread_mutex_t object specified by *mutex*.
CEE5IA	Severity	3
	Msg_No	5706
	Message	The mutex specified by *mutex* is not owned by the calling thread.

CEE5IO	Severity	4
	Msg_No	5720
	Message	Mutex specified by *mutex* not reacquired after condition wait terminated because thread was forced to terminate.
CEE5IU	Severity	3
	Msg_No	5726
	Message	The condition variable specified by *cond* is not initialized.
CEE5J0	Severity	4
	Msg_No	5728
	Message	Address exception while referencing storage allocated by condition initialization for cond_t object specified by cond.
CEE5J1	Severity	3
	Msg_No	5729
	Message	The mutex specified by *mutex* is a recursive mutex.
CEE5J2	Severity	3
	Msg_No	5730
	Message	A mutex other than the mutex specified by *mutex* is already associated with the condition specified by *cond*.
CEE5J3	Severity	3
	Msg_No	5731
	Message	Unexpected return code from z/OS UNIX condition setup, BPX1CSE, callable service.
CEE5J4	Severity	3
	Msg_No	5732
	Message	Unexpected return code from z/OS UNIX condition wait, BPX1CWA, callable service.

CEEOPDD

CEEOPDD destroys a condition attributes object.

Syntax

void CEEOPDD (*condattr, [fc]*)

```
CEE_TOKEN    *condattr;
FEED_BACK    *fc;
```

CEEOPDD

Call this CWI interface as follows:

```
L     R15,CEECAALEOV-CEECAA(,R12)     CAA address is in R12
L     R15,0248(,R15)
BALR  R14,R15
```

condattr **(input/output)**

The location that contains the token of an initialized condition attributes object.

fc **(output/optional)**
The feedback code returned by the service. It indicates the degree of success in deleting the condition attributes object.

The following message identifiers and associated severities can be returned by the service in the feedback code *fc*.

CEE000	Severity	0
	Msg_No	0000
	Message	The service completed successfully.
CEE4S9	Severity	3
	Msg_No	5001
	Message	The service is unavailable unless POSIX(ON) run-time option specified and z/OS UNIX System Services are started.
CEE5J0	Severity	4
	Msg_No	5728
	Message	Address exception while referencing storage allocated by condition attribute initialization for condattr_t object specified by *condattr*.
CEE5JC	Severity	3
	Msg_No	5740
	Message	Address exception accessing condattr_t object specified by condattr.
CEE5JD	Severity	4
	Msg_No	5741
	Message	Unable to free storage allocated by condition attribute initialization for condattr_t object specified by *condattr*.
CEE5JF	Severity	3
	Msg_No	5743
	Message	The condattr_t object specified by *condattr* is invalid (not initialized).
CEE5JI	Severity	3
	Msg_No	5746
	Message	Condattr_t object specified by *condattr* is damaged.

CEEOPDG

CEEOPDG returns an integer value indicating attributes specified by a condition variable attributes object. Valid attributes are:

DEFAULT
N/A

NODEBUG
Indicates that condition variable services should not report state changes for a condition variable which was initialized with this attribute.

Syntax

void CEEOPDG (*condattr, kind, [fc]*)

```
CEE_TOKEN   *condattr;
INT4        *kind;
FEED_BACK   *fc;
```

CEEOPDG

Call this CWI interface as follows:

```
L     R15,CEECAALEOV-CEECAA(,R12)     CAA address is in R12
L     R15,0252(,R15)
BALR  R14,R15
```

condattr **(input/output)**

The location that contains the token of an initialized condition variable attributes object.

kind **(output)**

The location of a value specifying a condition variable attribute. Values returned by CEEOPDG are:

0 DEFAULT
2 NODEBUG

fc **(output/optional)**

The feedback code returned by the service. It indicates the degree of success in interrogating the condition variable attributes object.

The following message identifiers and associated severities can be returned by the service in the feedback code *fc*.

CEE000	Severity	0
	Msg_No	0000
	Message	The service completed successfully.
CEE4S9	Severity	3
	Msg_No	5001
	Message	This service is unavailable unless POSIX(ON) run-time option specified and z/OS UNIX System Services are started.
CEE5J0	Severity	4
	Msg_No	5728
	Message	Address exception while referencing storage allocated by condition variable attribute initialization for condattr_t object specified by *condattr*.
CEE5JF	Severity	3
	Msg_No	5743
	Message	The condattr_t object specified by *condattr* is invalid (not initialized).
CEE5JM	Severity	3
	Msg_No	5750
	Message	Address exception attempting to store attribute value at address specified for *kind*.

CEE5JN	Severity	4
	Msg_No	5751
	Message	Valid attribute value for condattr_t object specified by *condattr* not found in attribute object storage.

CEEOPDI

CEEOPDI initializes a condition attributes object. There are no implementation defined attributes for condition variables.

Syntax

void CEEOPDI (*condattr, [fc]*)

```
CEE_TOKEN    *condattr;
FEED_BACK    *fc;
```

CEEOPCI

Call this CWI interface as follows:

```
L     R15,CEECAALEOV-CEECAA(,R12)     CAA address is in R12
L     R15,0244(,R15)
BALR  R14,R15
```

condattr **(input)**

The location of the caller-provided condition attributes object.

fc **(output/optional)**

The feedback code returned by the service. It indicates the degree of success in initializing the new condition attributes object.

The following message identifiers and associated severities can be returned by the service in the feedback code *fc*.

CEE000	Severity	0
	Msg_No	0000
	Message	The service completed successfully.
CEE4S9	Severity	3
	Msg_No	5001
	Message	The service is unavailable unless POSIX(ON) run-time option specified and z/OS UNIX System Services are started.
CEE5J0	Severity	4
	Msg_No	5728
	Message	Address exception while referencing storage allocated by condition attribute initialization for condattr_t object specified by *condattr*.
CEE5JA	Severity	3
	Msg_No	5738
	Message	The condattr_t object specified by *condattr* is already initialized.

CEE5JB	Severity	3
	Msg_No	5739
	Message	Insufficient storage to initialize the condattr_t object specified by *condattr*.
CEE5JC	Severity	3
	Msg_No	5740
	Message	Address exception accessing condattr_t object specified by *condattr*.
CEE5JD	Severity	4
	Msg_No	5741
	Message	Unable to free storage allocated by condition attribute initialization for condattr_t object specified by *condattr*.

CEEOPDS

CEEOPDS changes attributes specified by a condition variable attributes object. Valid attributes are:

DEFAULT
N/A

NODEBUG
Indicates that condition variable services should not report state changes for a condition variable which was initialized with this attribute.

Syntax

void CEEOPDS (*condattr, kind, [fc]*)

```
CEE_TOKEN   *condattr;
INT4        *kind;
FEED_BACK   *fc;
```

CEEOPDS
Call this CWI interface as follows:

```
L     R15,CEECAALEOV-CEECAA(,R12)     CAA address is in R12
L     R15,0256(,R15)
BALR  R14,R15
```

condattr **(input/output)**
The location that contains the token of an initialized condition variable attributes object.

kind **(input/output)**
The location of a value specifying a condition variable attribute. Valid values are:
0 DEFAULT
2 NODEBUG

fc **(output/optional)**
The feedback code returned by the service. It indicates the degree of success in setting the condition variable attributes object.

The following message identifiers and associated severities can be returned by the service in the feedback code *fc*.

CEE000	Severity	0
	Msg_No	0000
	Message	The service completed successfully.
CEE4S9	Severity	3
	Msg_No	5001
	Message	The service is unavailable unless POSIX(ON) run-time option specified and z/OS UNIX System Services are started.
CEE5J0	Severity	4
	Msg_No	5728
	Message	Address exception while referencing storage allocated by condition variable attribute initialization for condattr_t object specified by *condattr*.
CEE5JF	Severity	3
	Msg_No	5743
	Message	The condattr_t object specified by *condattr* is invalid (not initialized).
CEE5JL	Severity	3
	Msg_No	5749
	Message	The attribute value specified by *kind* is invalid.

Process Control Functions Support

In addition to those functions that are explicitly provided for threading applications, there are a number of POSIX 1003.1 functions that have either expanded definitions or new definitions. This section contains the CWIs that support those functions.

CEEOEXEC

CEEOEXEC replaces the prior POSIX process image with a new process image for the executable file being run, supporting the POSIX 1003.1 `exec()` function.

Syntax

void CEEOEXEC (*path_name_length, path_name, argument_count, argument_length_list, argument_list, environment_count, environment_data_length, environment_data_list, [fc]*)

```
INT4     *path_name_length;
VSTRING  *path_name;
INT4     *argument_count;
POINTER  *argument_length_list;
POINTER  *argument_list;
INT4     *environment_count;
POINTER  *environment_data_length;
POINTER  *environment_data_list;
FEEDBACK *fc;
```

CEEOEXEC

Call this CWI interface as follows:

```
L     R15,CEECAALEOV-CEECAA(,R12)     CAA address is in R12
L     R15,0000(,R15)
BALR  R14,R15
```

path_name_length **(input)**
Specifies the name of a full word containing the length of the path name of the file (program) to be run. The length can be up to 1023 bytes long.

path_name **(input)**
Specifies the name of a field of length *file_name_length* containing the fully qualified path name of the file (program) to be run. Each component of the path name can be up to 255 characters long. The complete path name can be up to 1023 characters long and does not require a terminating character.

argument_count **(input)**
Specifies the name of a full word containing a count of the number of pointers in the *argument_length_list* and the *argument_list* lists. If the program needs no arguments, specify zero.

argument_length_list **(input)**
Specifies the address of the first in a list of pointers. Each pointer in the list is the address of a full word giving the length of one of the arguments to be passed to the specified program. If the program needs no arguments, specify zero.

argument_list **(input)**
Specifies the address of a list of pointers. Each pointer in the list is the address of a character string which is an argument to be passed to the specified program. Each argument is of the length specified by the corresponding element in the *argument_length_list*. If the program needs no arguments, specify zero.

environment_count **(input)**
Specifies the name of a full word containing a count of the number of pointers in the *environment_data_length* and the *environment_data_list* lists. If the program needs no arguments, specify zero.

environment_data_length **(input)**
Specifies the address of the first in a list of pointers. Each pointer in the list is the address of a full word giving the length of one of the environment variables to be passed to the specified program. If the program does not use environment variables, specify zero.

environment_data_list **(input)**
Specifies the address of a list of pointers. Each pointer in the list is the address of a character string consisting of one of the environment variables to be passed to the specified program. Each environment list argument is of the length specified by the corresponding element in the *environment_length_list*. If the program does not use environment variables, specify zero.

fc **(output/optional)**
The parameter in which the CWI service feedback code is placed. The following conditions can result from this CWI service.

CEE000	Severity	0
	Msg_No	0000
	Message	The service completed successfully.

CEE4SA	Severity	3
	Msg_No	5002
	Message	POSIX function not available. z/OS UNIX System Services were not started.
CEE512	Severity	3
	Msg_No	5154
	Message	The requested `exec()` failed because it was invoked from a multithread environment.
CEE519	Severity	3
	Msg_No	5161
	Message	The z/OS UNIX callable service **BPX1EXC** for the `exec()` function was unsuccessful. The system return code was [*return_code*]; the reason code was [*reason_code*].

Qualifying Data:

No.	Name	Input/Output	Type	Value
1	*parm_count*	Input	INT4	3
2	*return_code*	Input	INT4	Return code from kernel, BPX1EXC function *nn* Codes defined by ANSI C, POSIX, and z/OS UNIX
3	*reason_code*	Input	INT4	Reason code from kernel, BPX1EXC function *nn* Codes defined by ANSI C, POSIX, and z/OS UNIX

Usage Notes:

1. Replaces the prior process image with a new process image for the executable file being run.
2. Target of `exec()` must be a C program and live in the POSIX file system and POSIX(ON) run-time option must be present.
3. Establishes an exit routine with the kernel, to gain control after the kernel has validated the `exec()` and prior to replacing the process image. In this exit routine, Language Environment drives member languages for enclave termination.
4. The values of the *return_code* and *reason_code* are as defined in the *z/OS UNIX System Services Programming: Assembler Callable Services Reference* and the *OpenEdition for VM/ESA: Callable Services Reference*.
5. This function is accessible independent of the POSIX run-time option.

CEEOFORK

CEEOFORK creates a new POSIX process, called a child process, supporting the POSIX 1003.1 `fork()` function. CEEOFORK supports the XPG4 standard `vfork()` function.

Syntax

void CEEOFORK (*function_code, pid, [fc]*)

```
INT4        *function_code;
INT4        *pid;
FEED_BACK   *fc;
```

CEEOFORK

Call this CWI interface as follows:

```
L     R15,CEECAALEOV-CEECAA(,R12)     CAA address is in R12
L     R15,0008(,R15)
BALR  R14,R15
```

function_code **(input)**

A full word binary integer that specifies whether the function is `fork()` or `vfork()`. It must contain one of the following values:

0 Language Environment has been requested to perform `fork()`, can the member language tolerate the `fork()`. If so, then perform `fork()`.

1 Language Environment has been requested to perform `vfork()`, can the member language tolerate the `vfork()`. If so, then perform `vfork()`.

pid **(output)**

A full word binary integer to contain the process identifier of the newly-created child process.

When `fork()` or `vfork()` returns to the calling (parent) process, it returns the process identifier of the newly create child.

Because the child is a duplicate, it contains the same call to `fork()` or `vfork()` that was in the parent. Execution of the child begins with this `fork()` or `vfork()` call returning a value of zero, the child then proceeds with normal execution.

If the *pid* is returned as minus 1, then no child process was created, for the reason specified in feedback token CEE510.

fc **(output/optional)**

The parameter in which the CWI service feedback code is placed. The following conditions can result from this CWI service.

CEE000	Severity	0
	Msg_No	0000
	Message	The service completed successfully.
CEE4SA	Severity	3
	Msg_No	5002
	Message	POSIX function not available. z/OS UNIX system services were not started.
CEE50V	Severity	3
	Msg_No	5151
	Message	Language Environment member identifier number *[member_id]* cannot tolerate the POSIX `fork()` or `vfork()` function.

CEE510	Severity	3
	Msg_No	5152
	Message	The z/OS UNIX callable service for the `fork()` function was unsuccessful. The system return code was [*return_code*]; the reason code was [*reason_code*]. **Note:** The system return code and reason code are documented in the z/OS UNIX manuals.
CEE512	Severity	3
	Msg_No	5154
	Message	The requested `fork()` or `vfork()` service failed because it was invoked from a multithread environment.

Qualifying Data (when CEE510):

No.	Name	Input/ Output	Type	Value
1	*parm_count*	Input	INT4	3
2	*return_code*	Input	INT4	Return code from kernel, BPX1FRK function *nn* Codes defined by ANSI C, POSIX, and z/OS UNIX
3	*reason_code*	Input	INT4	Reason code from kernel, BPX1FRK function *nn* Codes defined by ANSI C, POSIX, and z/OS UNIX

Usage Notes:

1. The new process (called the *child process*) is a duplicate of the process that calls `fork()` (called the *parent process*).
2. Member languages are notified (event code 24 and function code 1) that a `fork()` has been requested and can the member tolerate a `fork()`.

   The event handler CEEEVnnn sets the return code in R15 to the following values:
   0 Member language can tolerate being `fork()`
   -4 Member language cannot tolerate being `fork()`
   16 Event handler encountered an unrecoverable error.
3. Member languages are notified (event code 24 and function code 2) to perform any required cleanup in the child process.
4. The values of the return_code and reason_code (*nn*) are as defined in the *z/OS UNIX System Services Programming: Assembler Callable Services Reference*.
5. This function is accessible independent of the POSIX run-time option.

CEEOSPWN

CEEOSPWN creates a new POSIX process and immediately loads the process image from an executable file in the HFS. The kernel callable service, BPX1SPN, is invoked to perform most of this function. The child process is created in a new address space unless the environment variable _BPX_SHAREAS has a value of

'YES', in which case the child process shares the address space with its parent. If the _BPX_SHAREAS value is 'NO' the process runs in a separate address space from the caller's address space.

Syntax

void CEEOSPWN (*path_name_length, path_name, argument_count, argument_length_list, argument_list, environment_count, environment_data_length, environment_data_list, filedesc_count, filedesc_list, inherit_area_len, inherit_area, process_id, [fc]***)**

```
INT4        *path_name_length;
VSTRING     *path_name;
INT4        *argument_count;
POINTER     *argument_length_list;
POINTER     *argument_list;
INT4        *environment_count;
POINTER     *environment_data_length;
POINTER     *environment_data_list;
INT4        *filedesc_count;
VSTRING     *filedesc_list;
INT4        *inherit_area_len;
VSTRING     *inherit_area;
INT4        *process_id;
FEED_BACK   *fc;
```

CEEOSPWN

Call this CWI interface as follows:

```
L       R15,CEECAALEOV-CEECAA(,R12)       CAA address is in R12
L       R15,0044(,R15)
BALR    R14,R15
```

path_name_length **(input)**
Specifies the name of a full word containing the length of the pathname of the file (program) to be run. The length can be up to 1023 bytes long.

path_name **(input)**
Specifies the name of a field of length *path_name_length* containing the fully qualified pathname of the file (program) to be run. Each component of the pathname can be up to 255 characters long. The complete pathname can be up to 1023 characters long, and does not require a terminating character.

argument_count **(input)**
Specifies the name of a full word containing a count of the number of pointers in the *argument_length_list* and the *argument_list* lists. If the program need no arguments, specify zero.

argument_length_list **(input)**
Specifies the address of the first in a list of pointers. Each pointer in the list is the address of a full word giving the length of one of the arguments to be passed to the specified program. If the program needs no arguments, specify zero.

argument_list **(input)**
Specifies the address of a list of pointers. Each pointer in the list is the address of a character string which is an argument to be passed to the specified program. Each argument is of the length specified by the corresponding element in the *argument_length_list*. If the program needs no arguments, specify zero.

environment_count **(input)**
Specifies the name of a full word containing a count of the number of pointers

in the *environment_data_length* and the *environment_data_list* lists. If the program need no arguments, specify zero.

environment_data_length **(input)**
Specifies the address of the first in a list of pointers. Each pointer in the list is the address of a full word giving the length of one of the environment variables to be passed to the specified program. If the program does not use environment variables, specify zero.

environment_data_list **(input)**
Specifies the address of a list of pointers. Each pointer in the list is the address of a character string consisting of one of the environment variables to be passed to the specified program. Each environment list argument is of the length specified by the corresponding element in the *environment_length_list*. If the program does not use environment variables, specify zero.

filedesc_count **(input)**
Specifies the name of a full word containing a count of the number of file descriptors the child process shall inherit. It may take a value from -1 to `OPEN_MAX`. If the value is -1, all file descriptors from the parent are inherited without remapping by the child and the *filedesc_list* is ignored. If the value is 0, no file descriptors are inherited by the child and the *filedesc_list* is ignored.

filedesc_list **(input)**
Specifies the name of a list of full word file descriptor remap values. Except for those file descriptors designated by **SPAWN_FDCLOSED**, each of the child's file descriptors in the range zero to *filedesc_count*-1 shall inherit file descriptor remap values *filedesc_list*(1) to *filedesc_list*(*filedesc_count*). (The constant **SPAWN_FDCLOSED** is defined in thez/OS UNIX macro, BPXYCONS.)

inherit_area_len **(input)**
Specifies the name of a full word that contains the length of the inheritance structure specified in *inherit_area*. If this argument contains a value of zero, the *inherit_area* argument is ignored.

inherit_area **(input)**
Specifies the name of a data area that contains the inheritance structure for the child process. (The inheritance structure is defined in the z/OS UNIX macro, BPXYINHE.)

process_id **(output)**
Specifies the process id(PID) of the child process.

fc **(output/optional)**
Specifies the optional feedback token where the CWI feedback code will be placed. If this argument is omitted and the CWI will return a feedback code other than **CEE000**, the CWI will 'raise' this feedback code as an error condition.

The following conditions can result from this CWI service:

CEE000	Severity	0
	Msg_No	0000
	Message	The service completed successfully.

CEE513	Severity	3
	Msg_No	5155
	Message	The z/OS UNIX callable service, BPX1SPN, for the `spawn()` and `spawnp()` functions was unsuccessful. The system return code was [*return_code*], the reason code was [*reason_code*].

Qualifying Data (when CEE513):

No.	Name	Input/ Output	Type	Value
1	*parm_count*	input	INT4	3
2	*return_code*	input	INT4	Return code from kernel, BPX1SPN function **nn** codes defined by ANSI C, POSIX, and z/OS UNIX
3	*reason_code*	input	INT4	Reason code from kernel,BPX1SPN function *nn* codes defined by ANSI C, POSIX, and z/OS UNIX

Usage Notes:

1. The new process (called the *child process*) inherits the following attribute from the process that calls **spawn/spawnp**. For further details, see POSIX .4b draft 8.
2. Member languages are notified that a **spawn/spawnp** has been requested and given the opportunity to indicate whether they can tolerate a **spawn/spawnp**. The event handler CEEVnnn sets the return code in register 15 to 0 if member language can tolerate being **spawn/spawnp**, -4 if member language cannot tolerate being **spawn/spawnp**, and 16 if the event handler encountered an unrecoverable error.
3. The values for the return code and reason code are defined in the *z/OS UNIX System Services Programming: Assembler Callable Services Reference*.
4. This function is accessible independent of the POSIX run-time option.

CEEVnnn

CEEVnnn sets the return code in register 15 to 0 if member languages can tolerate being **spawn/spawnp**, 4 if member languages cannot tolerate being **spawn/spawnp**, and 16 if the event handler encountered an unrecoverable error.

Syntax

int CEEVnnn (*event_code, function_code***)**

```
CONST INT  *event_code;
INT        *function_code;
```

event_code **(input)**
The event code for all POSIX events, value 24.

function_code **(input)**
The function code for this event, value 8.

Miscellaneous Utilities

The CWIs in this section provide varied functions.

CEEOEXIT

CEEOEXIT CWI service terminates the calling process.

Syntax

void CEEOEXIT (*status*)

```
INT4    *status;
```

CEEOEXIT

Call this CWI interface as follows:

```
L     R15,CEECAALEOV-CEECAA(,R12)     CAA address is in R12
L     R15,0004(,R15)
BALR  R14,R15
```

status **(output)**

A full word binary integer containing the status field conforming to the allowable exit status values of:

Status Description

X'000000'*xx*

Normal Termination. The child process ended due to a normal termination of the process with status code indicated as *xx*, where *xx* can be any value.

Usage Notes:

1. If the application was invoked due to an `exec()` or `fork()`, the kernel does not return to the caller. If it cannot complete its processing successfully, an EC6 abend is issued.
2. If an invalid exit status is specified, the kernel issues an EC6 abend and a reason code X'0B19C00F'.
3. This function is accessible independent of the POSIX run-time option.

CEEOXEXE

When a POSIX process is to exec a new file (terminate a current process), Language Environment must be able to run clean up functions to terminate its environment properly. CEEOXEXE is the exec exit routine given control to perform normal enclave termination.

Syntax

void CEEOXEXE (*plist*)

```
POINTER    *plist;
```

plist **(input)**

Specifies the name of a full word containing the address of the user exit parameter list. This value is in R1 when the user exit is invoked. If the user exit does not require parameters, specify 0.

Support for POSIX Functions getenv(), setenv(), and clearenv()

Environment variables are contained in an array of null-terminated strings of the form *name=value* in the POSIX process. These environment variables are manipulated by the functions listed below, or by the external variable **extern char **environ**. The names cannot contain the equal sign character (=).

Access to environment variables using **environ cannot be guaranteed in a POSIX application that uses multiple threads. Access by these functions serializes access to the environment variables and guarantees consistency of the environment variable array in a threaded environment.

The support of environment variables is provided independent of the setting of POSIX(ON|OFF). The functions that manipulate environment variables are listed below:

Syntax

```
#include  <sys/types.h>
char    *getenv(const  char  *name);
int       setenv(const  char  *name,  char  *newvalue,  int  overwrite);
int       clearenv(void);
```

getenv()
Searches the environment variable list for a string of the form *name=value* and returns a pointer to *value* if such a string is present, NULL otherwise. For details, see the POSIX 1003.1 definition.

setenv()
Searches the environment variable list for a string of the form *name=value*. If found and the *overwrite* argument is nonzero, the *newvalue* is substituted for the current value. If the string is not found, add it to the environment variable list. For details, see the POSIX 1003.1 definition.

clearenv()
Clears all of the environment variables in the POSIX process. For details, see the POSIX 1003.1 definition.

Errors

The errors that can occur, beyond those defined by POSIX, are:

EMVSBADCHAR
Bad input character

ENOMEM
Not enough memory available

Interactions with Language Environment

The environment variables are always available, independent of the POSIX(ON|OFF) setting.

CEEBENV

Syntax

void CEEBENV (*function_code, name_length, name,value_length, value, overwrite, [fc]*)

```
INT4     *function_code;
INT4     *name_length;
VSTRING  *name;
INT4     *value_length;
POINTER  *value;
INT4     *overwrite;
FEEDBACK *fc;
```

CEEBENV

Call this CWI interface as follows:

```
L     R15,CEECAACELV-CEECAA(,R12)     CAA address is in R12
L     R15,3416(,R15)
BALR  R14,R15
```

function_code **(input)**

A full word binary integer containing the function code of the one of the following values:

1 Perform `getenv()`

Searches the environment list for environment variable specified by *name* and if found returns a pointer to *value*.

2 Perform `setenv()`

Adds, changes, or deletes an environment variable in the environment list.

3 Perform `clearenv()`

Clears all environment variables in the environment list.

4 Perform internal `getenv()`

Functionally the same as (1) except that it is used internally within the library. The environment variable is returned in a buffer that is independent of the buffer used by external callers of `getenv()`.

name_length **(input/output)**

A full word binary integer containing the length of the name for the environment variable. If request is `clearenv()`, this argument is ignored.

name **(input/output)**

Specifies the address of the name of an environment variable. If request is `clearenv()`, this argument is ignored.

value_length **(input/output)**

A full word binary integer containing the length of the value for the environment variable. This argument is output from `getenv()`, and input to `setenv()`. If request is `clearenv()`, this argument is ignored. A length of zero indicates a delete request.

value **(input/output)**

Specifies the address of a field which contains the address of a null terminated string containing the value of the environment variable, or zero if this is a delete request. This argument is output from `getenv()`, and input to `setenv()`. If request is `clearenv()`, this argument is ignored.

overwrite **(input)**
A full word binary integer. If nonzero, `setenv()` changes the existing value of existing *name* to *value* or deletes the existing environment variable and adds a new environment variable. If request is `getenv()` or `clearenv()`, this argument is ignored.

fc **(output/optional)**
The parameter in which the CWI service feedback code is placed. The following conditions can result from this CWI service.

CEE000	Severity	0
	Msg_No	0000
	Message	The service completed successfully.
CEE51O	Severity	3
	Msg_No	5176
	Message	Not enough memory available.
CEE51P	Severity	3
	Msg_No	5177
	Message	Bad input character detected for name or value.
CEE51Q	Severity	3
	Msg_No	5178
	Message	Bad address detected for the envar anchor or environment variable array.

Usage Notes:

1. The environment array is searched sequentially, and the first occurrence of *name* is used.
2. Access to the environment variable array is as follows:

   ceeedbenviron points to a field (either *ceeedenvar* or C's ***environ* in writable static) which points to a null terminated array of null terminated character strings of the format *name=value*.
3. Because an application can manipulate the environment using the *environ* pointer, Language Environment cannot guarantee a single instance of any particular environment variable.
4. This function can manipulate the value of the pointer *environ*, copies of that pointer need not be valid after call to this function.
5. For a `getenv()` request, the storage returned for the value character string is supplied by Language Environment. There is one buffer per thread. Thus it is the user's responsibility to use or save the value prior to the next call to `getenv()` on that thread.
6. Environment variable names that begin with "_BPXK_" are passed to the kernel through the callable service, BPX1ENV. Language Environment members and their users should not define environment variables that begin with the characters "_BPXK_"; otherwise, there may be conflicts with z/OS UNIX-defined variable names that begin with those characters.

Chapter 17. COBOL-Specific Vendor Interfaces

This section describes the COBOL-specific interfaces, ILBOLLDX and IGZCXCC.

ILBOLLDX — OS/VS COBOL Library Load/Delete Exit

You can use the OS/VS COBOL library load/delete exit to allow OS/VS COBOL NORES programs that have been link-edited with the SCEELKED data set of Language Environment to run in more than one z/OS task with Language Environment in a single address space. When you link-edit an OS/VS COBOL NORES program with SCEELKED, it will act like a RES program; for more information, see *Enterprise COBOL for z/OS and OS/390 Migration Guide*.

Syntax

void ILBOLLDX

R1 (input)

R1 contains a function code in byte 2 and a library routine identifier in byte 3 as shown below:

```
byte 0  1  2  3

R1= |xx|xx|ff|ll|

Where:
                                          Library Routine
  Reserved (xx)       Function (ff)       Identifier (ll)
  ----------------    ----------------    ------------------
  Always hex 00       01 - Load           01 - ILBOCOM0
                      02 - Delete         02 - ILBOSR
```

R0 (output)

R0 must be set to the address of the OS/VS COBOL library load module when a load function is done.

Usage Notes:

1. The OS/VS COBOL library load/delete exit will get control when normally a load or delete of ILBOCOM0 or ILBOSR would occur. The OS/VS COBOL library load/delete exit can then provide a unique copy of the ILBOCOM and ILBOSRV modules per task (TCB).
2. To enable the OS/VS COBOL library load/delete exit, a customer written CSECT called ILBOLLDX must be link edited with the following ILBO load modules:
   - ILBONTR (which is in the SCEERUN data set)
   - ILBOSRV (which is in the SCEERUN data set and the SCEELKED data set)
   - ILBOSTT (which is in the SCEERUN data set and the SCEELKED data set)

   Language Environment does not provide any usermod jobs to perform the link editing of the OS/VS COBOL library load/delete exit into Language Environment. It is the responsibility of the customer who is using the OS/VS COBOL library load/delete exit to do this.

   When ILBOLLDX is link edited with the ILBO routines, the link-edit attributes must not be altered and all of the ALIASes associated with each load module

© Copyright IBM Corp. 1991, 2002

must be preserved. For link-edit information to link-edit ILBOLLDX with the ILBO routines, see Figure 106, Figure 107 on page 571, and Figure 108 on page 571.

Additionally, all OS/VS NORES programs must be relink-edited using the modified SCEELKED data set.

3. On entry, R14 contains the return address and R15 the entry point address.
4. No save area will be passed to ILBOLLDX to save the caller's registers.
5. Registers 2-13 must be preserved.
6. ILBOLLDX must be REENTRANT (because it will be link-edited with reentrant ILBO routines).
7. ILBOLLDX must be AMODE 24, RMODE 24.
8. ILBOLLDX will be entered in AMODE 24 and must return in AMODE 24.
9. If ILBOLLDX detects an error condition, it must ABEND, as the caller does not expect return except when the operation is successful.
10. ILBOLLDX must support the concept of ″use counts″. An instance of a routine (the copy associated with a given task, for example) should not be deleted unless the count of delete requests for that instance equals the count of load requests. For example, if the following sequence of events is received for an instance of given library routine, the instance must not be deleted until the last delete in the sequence: load, load, delete, load, delete, delete.
11. OS/VS COBOL RES programs cannot be run with the ILBOLLDX support. Unpredictable results will occur if done.
12. ILBOLLDX is not called when the OS/VS COBOL NORES program is running as NORES.
13. Once ILBOLLDX is link-edited with the ILBO routines, ILBOLLDX must support all environments in which it is used.

```
Required link edit parameters: NCAL,RENT,REFR

Link edit control cards:

 INCLUDE SCEERUN(ILBONTR)
 INCLUDE YOURLIB(ILBOLLDX)
 ORDER ILBONTR
 ENTRY ILBONTR
 ALIAS ILBONTR0
 NAME  ILBONTR(R)
```

Figure 106. Link Edit Information to Enable ILBOLLDX in ILBONTR

```
Required link edit parameters: LET,NCAL,REUS

Link edit control cards:

 INCLUDE SCEERUN(ILBOSRV)
 INCLUDE YOURLIB(ILBOLLDX)
 ORDER ILBOSRV
 ORDER IGZEOB2
 ALIAS ILBOSR,ILBOSRV0,ILBOSRV1,ILBOSR3,ILBOSR5,ILBOST
 ALIAS ILBOSTP0,ILBOSTP1
 ENTRY ILBOSRV
 NAME ILBOSRV(R)
```

Figure 107. Link Edit Information to Enable ILBOLLDX in ILBOSRV

```
Required link edit parameters: LET,NCAL,RENT,REFR

Link edit control cards:

 INCLUDE AIGZMOD1(ILBOSTT)
 INCLUDE YOURLIB(ILBOLLDX)
 ORDER ILBOSTT
 ORDER IGZEOB2
 ALIAS ILBOSTT0
 ALIAS ILBOSTT2
 ENTRY ILBOSTT
 NAME ILBOSTT(R)
```

Figure 108. Link Edit Information to Enable ILBOLLDX in ILBOSTT

IGZCXCC — COBOL Call/Cancel Routine

The COBOL CALL/CANCEL interface, IGZCXCC, can be called from an assembler program to get the equivalent function of doing a COBOL dynamic call and a COBOL CANCEL. You can use the interface to call and cancel any programs that can be dynamically called or cancelled from a COBOL program.

Note: Starting with OS/390 Version 2 Release 6, the IGZCXCC functions of CALL with entry point provided and CANCEL with entry point provided are no longer available because they can cause problems when used with other high level languages. If you have a need to perform the load and delete activity, use the Language Environment preinitialization support (CEEPIPI), and provide your own load and delete service routines. For information about CEEPIPI and its support of user-supplied service routines, see *z/OS Language Environment Programming Guide*.

IGZCXCC provides two functions:

1. CALL with program name provided.
2. CANCEL with program name provided.

Syntax

void IGZCXCC

R1 (input)
R1 contains the address of a structure that provides a function code and the necessary information for each function code. The structure can be in storage above the 16M line.

- The structure for CALL a program with program name is shown in Figure 109
- The structure for CANCEL a program with program name is shown in Figure 110

R15 (output)
For CALL, R15 is set to the R15 value returned from the program that is the target of the CALL.

For CANCEL, R15 is set to 0.

All fields are input only.

```
  +-------------------------------------------------+
0 | Function = 1.                                   |
  | Fullword binary.                                |
  |                                                 |
  +-------------------------------------------------+
4 | Pointer to module name. Pointer.                |
  |                                                 |
  |                                                 |
  +-------------------------------------------------+
8 | Load module name length. Fullword binary.       |
  | Valid values: 1 to 8                            |
  |                                                 |
  +-------------------------------------------------+
C | Addr of the parameter list. Pointer.            |
  | Valid values: 0 or address of parameter         |
  | list.                                           |
  +-------------------------------------------------+
```

Figure 109. Structure for CALL with Name

All fields are input only.

```
  +-------------------------------------------------+
0 | Function = 2.                                   |
  | Fullword binary.                                |
  |                                                 |
  +-------------------------------------------------+
4 | Pointer to module name. Pointer.                |
  |                                                 |
  |                                                 |
  +-------------------------------------------------+
8 | Load module name length. Fullword binary.       |
  | Valid values: 1 to 8                            |
  |                                                 |
  +-------------------------------------------------+
```

Figure 110. Structure for CANCEL with Name

Usage Notes:

1. IGZCXCC can only be used on z/OS non-CICS. IGZCXCC is supported in a multithread environment.
2. IGZCXCC is AMODE(31) and RMODE(ANY). It expects to be entered in AMODE(31) via BASSM. It returns using a BSM. Assembler routines that call

IGZCXCC must access it by issuing a LOAD SVC instruction. IGZCXCC must not be link edited with any other load modules, otherwise it will cause upward compatibility problems when moving from one release of Language Environment to another.

3. IGZCXCC can not be invoked with a LINK. If it is invoked with a LINK, it will signal condition IGZ0099C with error code 4.
4. IGZCXCC expects to be called from a Language Environment-enabled assembler program.
5. R12 must point to the CAA on entry.
6. R13 must point to a DSA with a valid NAB.
7. The COBOL portion of Language Environment must be initialized prior to the call to IGZCXCC.
8. If a parameter list is passed, the high order bit of the address of the last parameter must be on to indicate the end of the parameter list.
9. There are no restrictions when mixing COBOL dynamic CALLs, COBOL CANCELs, IGZCXCC CALL with name provided (function code 1), and IGZCXCC CANCEL with name provided (function code 2).
10. If a Language Environment-enabled assembler program that is going to call IGZCXCC is called by OS/VS COBOL programs or VS COBOL II programs, specify NAB=NO and MAIN=NO in the CEEENTRY macro.
11. When a IGZCXCC CANCEL call is done for a program that either has not been dynamically called or has already been canceled, no action is taken, and no condition is signaled. This is the same behavior as a COBOL CANCEL.

Chapter 18. C/C++ Special Purpose Interfaces for IEEE Floating-Point

This section describes the C/C++ special purpose interfaces for IEEE floating-point.

IEEE Floating-Point Introduction

Starting with the IBM S/390 Generation 5 Server, support for IEEE binary floating-point (IEEE floating-point) as defined by the ANSI/IEEE Standard 754-1985, IEEE Standard for Binary Floating-Point Arithmetic, is included. Starting with Version 2 Release 6, OS/390 (including the Language Environment and C/C++ components) has added support for IEEE floating-point.

Notes:

1. You must have OS/390 Release 6 or later to use the IEEE floating-point instructions. In OS/390 Version 2 Release 6, the base control program (BCP) was enhanced to support the new IEEE floating-point hardware in the IBM S/390 Generation 5 Server. This enabled programs running on OS/390 Release 6 or later to use the IEEE floating-point instructions and 16 floating-point registers. In addition, the BCP provided simulation support for all the new floating-point hardware instructions. This enabled applications that make light use of IEEE floating-point, and which could tolerate the overhead of software simulation, to execute on OS/390 Release 6 or later without requiring an IBM S/390 Generation 5 Server.
2. The terms binary floating-point and IEEE floating-point are used interchangeably. The abbreviations BFP and HFP, which are used in some function names, refer to binary floating-point and S/390 hexadecimal floating-point (hexadecimal floating-point), respectively.

The C/C++ compiler provides a FLOAT option to select the format of floating-point numbers produced in a compile unit. The FLOAT option allows you to select either IEEE floating-point or hexadecimal floating-point format. For information on the C/C++ compiler options, see *z/OS C/C++ User's Guide*.

The C/C++ run-time library interfaces, which formerly supported only hexadecimal floating-point format, were changed in OS/390 Version 2 Release 6 to support both IEEE floating-point and hexadecimal floating-point formats. These interfaces are documented in the *z/OS C/C++ Run-Time Library Reference*.

The primary documentation for the IEEE floating-point support is contained in the *z/Architecture Principles of Operation, SA22-7832*, and the *z/OS C/C++ User's Guide*.

IEEE floating-point is provided on S/390 primarily to enhance interoperability and portability between S/390 and other platforms. It is anticipated that IEEE floating-point will be most commonly used for new and ported applications, and in emerging environments, such as Java. Customers should not migrate existing applications that use hexadecimal floating-point to IEEE floating-point, unless there is a specific reason (such as a need to interoperate with a non-S/390 platform).

IBM does not recommend mixing floating-point formats in an application. However, for applications which must handle both formats, the C/C++ run-time library does provide some support which is described below.

© Copyright IBM Corp. 1991, 2002

IEEE Floating-Point Functions

__chkbfp() — Check IEEE Facilities Usage

Standards

Standards / Extensions	C or C++	Dependencies
	both	OS/390 V2R6

Format

```
#include <_Ieee754.h>
int __chkbfp(void);
```

General Description

The system sets a flag in the secondary task control block (STCB) when IEEE floating-point hardware facilities or simulated facilities (including additional floating-point (AFP) registers in hexadecimal floating-point) are first accessed by a task. The __chkbfp() function returns the state of this flag.

Returned Value

0 IEEE floating-point facilities (including AFP registers in hexadecimal floating-point mode) have *not* been used by the task.

1 IEEE floating-point facilities have been used by the task.

Related Information

- "__fp_level() — Determine Type of IEEE Facilities Available" on page 579

__fp_btoh() — Convert from IEEE Floating-Point to Hexadecimal Floating-Point

Standards

Standards / Extensions	C or C++	Dependencies
	both	OS/390 V2R6

Format

```
#include <_Ieee754.h>
int __fp_btoh(void *src_ptr, int src_type,
              void *trg_ptr, int trg_type,
              int rmode);
```

General Description

The __fp_btoh() function converts data in IEEE floating-point format, pointed to by *src_ptr*, to hexadecimal floating-point format, and stores the hexadecimal floating-point value at the location pointed to by *trg_ptr*. *src_ptr* and *trg_ptr* point to C floating-point variables of type float, double, or long double as indicated by *src_type* and *trg_type*. Valid values for *src_type* and *trg_type* are _FP_FLOAT, _FP_DOUBLE, and _FP_LONG_DOUBLE. *rmode* specifies rounding mode for inexact mappings. Valid values are:

Value Description

_FP_BH_NR
No rounding

_FP_BH_RZ
Rounding toward zero

_FP_BH_BRN
Biased round to nearest

_FP_BH_RN
Round to nearest

_FP_BH_RP
Round toward +infinity

_FP_BH_RM
Round toward −infinity

Returned Value

If invalid *src_type*, *trg_type*, or *rmode* is specified, __fp_btoh() returns −1. Otherwise, it returns the following values:

0 Zero (IEEE floating-point +zero or −zero value mapped to hexadecimal floating-point +zero or −zero value, respectively).

1 Underflow (IEEE floating-point value is too small to map to hexadecimal floating-point). In this case **trg_ptr* is set to the hexadecimal floating-point value corresponding to the smallest convertible IEEE floating-point value.

2 Success (with rounding performed as indicated by *rmode*).

3 Overflow (IEEE floating-point value is too large to map to hexadecimal floating-point). In this case **trg_ptr* is set to the hexadecimal floating-point value corresponding to the largest convertible IEEE floating-point value.

Related Information

- "__fp_htob() — Convert from Hexadecimal Floating-Point to IEEE Floating-Point" on page 578

__fp_cast() — Cast between Floating-Point Data Types

Standards

Standards / Extensions	C or C++	Dependencies
	both	OS/390 V2R6

Format

```
#include <_Ieee754.h>
int __fp_cast(int mode, void *src_ptr, int src_type,
                        void *trg_ptr, int trg_type);
```

General Description

The __fp_cast() function casts between C floating-point data types, when the data format does not match the format specified by the FLOAT compiler option. The *mode* parameter indicates the format of source and target floating-point values pointed to by *src_ptr* and *trg_ptr*. Valid values for the *mode* parameter are _FP_HFP_MODE for hexadecimal floating-point format and _FP_BFP_MODE for IEEE floating-point format.

src_type and *trg_type* indicate the C data type (float, double, or long double) of the source and target floating-point values, respectively. Valid values for *src_type* and *trg_type* are _FP_FLOAT, _FP_DOUBLE or _FP_LONG_DOUBLE.

Returned Value

If invalid values for *mode*, *src_type* or *trg_type* are specified, __fp_cast() returns −1. Otherwise, it performs the requested cast and returns 0.

Related Information

- "__fp_setmode() — Set IEEE or Hexadecimal Mode" on page 580
- "__fp_swapmode() — Set IEEE or Hexadecimal Mode" on page 581
- "__isBFP() — Determine Application Floating-Point Mode" on page 586

__fp_htob() — Convert from Hexadecimal Floating-Point to IEEE Floating-Point

Standards

Standards / Extensions	C or C++	Dependencies
	both	OS/390 V2R6

Format

```
#include <_Ieee754.h>
int __fp_htob(void *src_ptr, int src_type,
              void *trg_ptr, int trg_type,
              int rmode);
```

General Description

The __fp_htob() function converts data in hexadecimal floating-point format, pointed to by *src_ptr*, to IEEE floating-point format, and stores the IEEE floating-point value at the location pointed to by *trg_ptr*. *src_ptr* and *trg_ptr* point to C floating-point variables of type float, double, or long double as indicated by *src_type* and *trg_type*. Valid values for *src_type* and *trg_type* are _FP_FLOAT, _FP_DOUBLE, and _FP_LONG_DOUBLE. *rmode* specifies rounding mode for inexact mappings. Valid values are:

Value **Description**

_FP_HB_NR
No rounding

_FP_HB_RZ
Rounding toward zero

_FP_HB_BRN
Biased round to nearest

_FP_HB_RN
Round to nearest

_FP_HB_RP
Round toward +infinity

_FP_HB_RM
Round toward −infinity

Returned Value

If invalid *src_type*, *trg_type*, or *rmode* is specified, __fp_htob() returns −1. Otherwise, it returns the following values:

0 Zero (hexadecimal floating-point +zero or −zero value mapped to IEEE floating-point +zero or −zero value, respectively).

1 Underflow (hexadecimal floating-point value is too small to map to IEEE

floating-point). In this case **trg_ptr* is set to the IEEE floating-point value corresponding to the smallest convertible hexadecimal floating-point value.

2 Success (with rounding performed as indicated by *rmode*).

3 Overflow (hexadecimal floating-point value is too large to map to IEEE floating-point). In this case **trg_ptr* is set to the IEEE floating-point value corresponding to the largest convertible hexadecimal floating-point value.

Related Information

- "__fp_btoh() — Convert from IEEE Floating-Point to Hexadecimal Floating-Point" on page 576

__fp_level() — Determine Type of IEEE Facilities Available

Standards

Standards / Extensions	C or C++	Dependencies
	both	OS/390 V2R6

Format

```
#include <_Ieee754.h>
int __fp_level(void);
```

General Description

The system provides simulation of IEEE floating-point hardware (including additional floating-point registers in hexadecimal mode). The __fp_level() function determines the level of IEEE floating-point support available.

Returned Value

0 No IEEE floating-point support available.

1 IEEE floating-point simulation is available.

2 IEEE floating-point hardware is available.

Related Information

- "__chkbfp() — Check IEEE Facilities Usage" on page 576

__fp_read_rnd() — Determine Rounding Mode

Standards

Standards / Extensions	C or C++	Dependencies
	both	OS/390 V2R6

Format

```
#include <float.h>
__fprnd_t __fp_read_rnd(void);
```

General Description

For an application running in IEEE floating-point mode, the __fp_read_rnd() function returns the current rounding mode indicated by the rounding mode field of the floating-point control (FPC) register. For an application running in hexadecimal floating-point mode, __fp_read_rnd() returns 0.

Returned Value

For an application running in IEEE floating-point mode, __fp_read_rnd() returns the following:

Value Rounding Mode

_FP_RND_RZ
Round toward 0

_FP_RND_RN
Round to nearest

_FP_RND_RP
Round toward +infinity

_FP_RND_RM
Round toward −infinity

For an application running in hexadecimal floating-point mode, __fp_read_rnd() returns 0.

Related Information

- "__fp_setmode() — Set IEEE or Hexadecimal Mode"
- "__fp_swap_rnd() — Swap Rounding Mode" on page 582
- "__isBFP() — Determine Application Floating-Point Mode" on page 586

__fp_setmode() — Set IEEE or Hexadecimal Mode

Standards

Standards / Extensions	C or C++	Dependencies
	both	OS/390 V2R6

Format

```
#include <_Ieee754.h>
void __fp_setmode(int mode);
```

General Description

The __fp_setmode() function sets a flag to tell C/C++ run-time library functions whether to interpret parameters as IEEE floating-point or hexadecimal floating-point values based on the value of *mode* as follows:

Value Description

_FP_MODE_RESET
Use the FLOAT compile option to determine the format of floating-point parameters.

_FP_HFP_MODE
Interpret parameters as hexadecimal floating-point values.

_FP_BFP_MODE
Interpret parameters as IEEE floating-point values.

Note: The compiler defines the __BFP__ macro if the FLOAT(IEEE) compile option is chosen. Otherwise, it undefines the __BFP__ macro. Headers related to floating-point, <float.h>, <limits.h>, and <math.h>, use the __BFP__ macro to select floating-point-type-specific bindings for functions and constants at compile-time. Applications which use __fp_setmode() must use the _FP_MODE_VARIABLE macro to prevent type-specific compile-time binding of functions and constants as illustrated by the following example:

```
#define _FP_MODE_VARIABLE
#include <float.h>
#include <limits.h>
#include <math.h>
...
```

Returned Value
None

Related Information
- "__fp_cast() — Cast between Floating-Point Data Types" on page 577
- "__fp_swapmode() — Set IEEE or Hexadecimal Mode"
- "__fp_swap_rnd() — Swap Rounding Mode" on page 582
- "__isBFP() — Determine Application Floating-Point Mode" on page 586

__fp_swapmode() — Set IEEE or Hexadecimal Mode

Standards

Standards / Extensions	C or C++	Dependencies
	both	OS/390 V2R6

Format

```
#include <_Ieee754.h>
int __fp_swapmode(int mode);
```

General Description
The __fp_swapmode() function sets a flag to tell C/C++ run-time library functions whether to interpret parameters as IEEE floating-point or hexadecimal floating-point values based on the value of *mode* as follows:

Value Description

_FP_MODE_RESET
Use the FLOAT compile option to determine the format of floating-point parameters.

_FP_HFP_MODE
Interpret parameters as hexadecimal floating-point values.

_FP_BFP_MODE
Interpret parameters as IEEE floating-point values.

Usage Notes:

1. Language Environment Library code and non-Language Environment Library code which have the Language Environment library bit set must use __fp_swapmode() to explicitly set floating point behavior. Failure to do so could result in incorrect floating point values.
2. Users of the Language Environment library bit which call c-rtl functions which could potentially use floating point values, need to use the __fp_swapmode() function as in the following example.
   a. Customer application compiled for IEEE floating point math, calls the C++ class library.
   b. the C++ class library calls __fp_swapmode() as follows

      ```
      int custmode;
      ```

      /*save customer fp mode and set fp mode to HFP */

      ```
      custmode = __fp_swapmode (_FP_HFP_MODE);
      ```

```
/* perform call to c-rtl */
sprintf();

/* restore customer fp mode */
__fp_setmode(custmode);
```

Returned Value

__fp_swapmode() returns a flag (same values as above) with the changed from floating point mode of operation.

If __fp_swapmode() is passed a value for fpmode other than the values shown above, the changed-to floating point mode will remain unchanged. The return value will continue to be the changed-from floating point mode.

Related Information

- "__fp_cast() — Cast between Floating-Point Data Types" on page 577
- "__fp_setmode() — Set IEEE or Hexadecimal Mode" on page 580
- "__fp_swap_rnd() — Swap Rounding Mode"
- "__isBFP() — Determine Application Floating-Point Mode" on page 586

__fp_swap_rnd() — Swap Rounding Mode

Standards

Standards / Extensions	C or C++	Dependencies
	both	OS/390 V2R6

Format

```
#include <float.h>
__fprnd_t __fp_swap_rnd(__fprnd_t rmode);
```

General Description

For an application running in IEEE floating-point mode, the __fp_swap_rnd() function returns the current rounding mode specified by the rounding mode field of the floating-point control (FPC) register and sets the rounding mode field in the FPC based on the value of *rmode* as follows:

Value Rounding Mode

_FP_RND_RZ
Round toward 0

_FP_RND_RN
Round to nearest

_FP_RND_RP
Round toward +infinity

_FP_RND_RM
Round toward −infinity

Note: When processing IEEE floating-point values, the C/C++ run-time library math functions require IEEE rounding mode of round to nearest. The C/C++ run-time library takes care of setting round to nearest rounding mode while executing math functions and restoring application rounding mode before returning to the caller.

For an application running in hexadecimal floating-point mode, __fp_swap_rnd() returns 0.

Returned Value

For an application running in IEEE floating-point mode, __fp_swap_rnd() function returns the following:

Value **Description**

_FP_RND_RZ
Round toward 0

_FP_RND_RN
Round to nearest

_FP_RND_RP
Round toward +infinity

_FP_RND_RM
Round toward −infinity

For an application running in hexadecimal floating-point mode, __fp_swap_rnd() returns 0.

Related Information

- "__fp_read_rnd() — Determine Rounding Mode" on page 579
- "__fp_setmode() — Set IEEE or Hexadecimal Mode" on page 580
- "__fp_swapmode() — Set IEEE or Hexadecimal Mode" on page 581
- "__isBFP() — Determine Application Floating-Point Mode" on page 586

__fpc_rd() — Read Floating-Point Control Register

Standards

Standards / Extensions	C or C++	Dependencies
	both	OS/390 V2R6

Format

```
#include <_Ieee754.h>
void __fpc_rd(_FP_fpcreg_t *fpc_ptr);
```

General Description

The __fpc_rd() function stores the contents of the floating-point control (FPC) register at the location pointed to by *fpc_ptr*.

Returned Value

None

Related Information

- "__fpc_rs() — Read Floating-Point Control Register and Change Rounding Mode Field" on page 584
- "__fpc_rw() — Read and Write the Floating-Point Control Register" on page 584
- "__fpc_sm() — Set Floating-Point Control Register Rounding Mode Field" on page 585
- "__fpc_wr() — Write the Floating-Point Control Register" on page 586
- "__fp_read_rnd() — Determine Rounding Mode" on page 579

__fpc_rs() — Read Floating-Point Control Register and Change Rounding Mode Field

Standards

Standards / Extensions	C or C++	Dependencies
	both	OS/390 V2R6

Format

```
#include <_Ieee754.h>
void __fpc_rs(_FP_fpcreg_t *cur_ptr, _FP_rmode_t rmode);
```

General Description

The __fpc_rs() function stores the current contents of the floating-point control (FPC) register at the location pointed to by *cur_ptr* and then sets the rounding mode field of the FPC based on the value specified by *rmode* as follows:

Value Rounding Mode

_RMODE_RN
Round to nearest

_RMODE_RZ
Round toward zero

_RMODE_RP
Round toward +Infinity

_RMODE_RM
Round toward −Infinity

Note: When processing IEEE floating-point values, the C/C++ run-time library math functions require IEEE rounding mode of round to nearest. The C/C++ run-time library takes care of setting round to nearest rounding mode while executing math functions and restoring application rounding mode before returning to the caller.

Returned Value

None

Related Information

- "__fpc_rd() — Read Floating-Point Control Register" on page 583
- "__fpc_rw() — Read and Write the Floating-Point Control Register"
- "__fpc_sm() — Set Floating-Point Control Register Rounding Mode Field" on page 585
- "__fpc_wr() — Write the Floating-Point Control Register" on page 586
- "__fp_swap_rnd() — Swap Rounding Mode" on page 582

__fpc_rw() — Read and Write the Floating-Point Control Register

Standards

Standards / Extensions	C or C++	Dependencies
	both	OS/390 V2R6

Format

```
#include <_Ieee754.h>
void __fpc_rw(_FP_fpcreg_t *cur_ptr, _FP_fpcreg_t *new_ptr);
```

General Description

The __fpc_rw() function stores the current contents of the floating-point control (FPC) register at the location pointed to by *cur_ptr* and then replaces the contents of the floating-point control (FPC) register with the value pointed to by *new_ptr*.

Note: When processing IEEE floating-point values, the C/C++ run-time library math functions require IEEE rounding mode of round to nearest. The C/C++ run-time library takes care of setting round to nearest rounding mode while executing math functions and restoring application rounding mode before returning to the caller.

Returned Value

None

Related Information

- "__fpc_rd() — Read Floating-Point Control Register" on page 583
- "__fpc_rs() — Read Floating-Point Control Register and Change Rounding Mode Field" on page 584
- "__fpc_sm() — Set Floating-Point Control Register Rounding Mode Field"
- "__fpc_wr() — Write the Floating-Point Control Register" on page 586
- "__fp_swap_rnd() — Swap Rounding Mode" on page 582

__fpc_sm() — Set Floating-Point Control Register Rounding Mode Field

Standards

Standards / Extensions	C or C++	Dependencies
	both	OS/390 V2R6

Format

```
#include <_Ieee754.h>
void __fpc_sm(_FP_rmode_t rmode);
```

General Description

The __fpc_sm() function changes the rounding mode field of the floating-point control (FPC) register based on the value of *rmode* as follows:

Value **Description**

_RMODE_RN
Round to nearest

_RMODE_RZ
Round toward zero

_RMODE_RP
Round toward +infinity

_RMODE_RM
Round toward −infinity

Note: When processing IEEE floating-point values, the C/C++ run-time library math functions require IEEE rounding mode of round to nearest. The C/C++ run-time library takes care of setting round to nearest rounding mode while executing math functions and restoring application rounding mode before returning to the caller.

Returned Value
None

Related Information
- "__fpc_rd() — Read Floating-Point Control Register" on page 583
- "__fpc_rs() — Read Floating-Point Control Register and Change Rounding Mode Field" on page 584
- "__fpc_wr() — Write the Floating-Point Control Register"
- "__fpc_rw() — Read and Write the Floating-Point Control Register" on page 584
- "__fp_swap_rnd() — Swap Rounding Mode" on page 582

__fpc_wr() — Write the Floating-Point Control Register

Standards

Standards / Extensions	C or C++	Dependencies
	both	OS/390 V2R6

Format
```
#include <_Ieee754.h>
void __fpc_wr(_FP_fpcreg_t *fpc_ptr);
```

General Description
The __fpc_wr() function replaces the contents of the floating-point control (FPC) register with the value pointed to by *fpc_ptr*.

Note: When processing IEEE floating-point values, the C/C++ run-time library math functions require IEEE rounding mode of round to nearest. The C/C++ run-time library takes care of setting round to nearest rounding mode while executing math functions and restoring application rounding mode before returning to the caller.

Returned Value
None

Related Information
- "__fpc_rd() — Read Floating-Point Control Register" on page 583
- "__fpc_rs() — Read Floating-Point Control Register and Change Rounding Mode Field" on page 584
- "__fpc_rw() — Read and Write the Floating-Point Control Register" on page 584
- "__fpc_sm() — Set Floating-Point Control Register Rounding Mode Field" on page 585
- "__fp_swap_rnd() — Swap Rounding Mode" on page 582

__isBFP() — Determine Application Floating-Point Mode

Standards

Standards / Extensions	C or C++	Dependencies
	both	OS/390 V2R6

Format

```
#include <_Ieee754.h>
int __isBFP(void)
```

General Description

The __isBFP() function determines the application floating-point mode.

Returned Value

__isBFP() returns 1 if the floating-point mode of the caller is IEEE, and returns 0 if the floating-point mode of the caller is hexadecimal.

Related Information

- "__fp_read_rnd() — Determine Rounding Mode" on page 579
- "__fp_setmode() — Set IEEE or Hexadecimal Mode" on page 580
- "__fp_swapmode() — Set IEEE or Hexadecimal Mode" on page 581
- "__fp_swap_rnd() — Swap Rounding Mode" on page 582

Appendix A. Options Control Block and Supplementary Options Control Block

The following sections describe the CEEOCB and CEESOCB macros, respectively.

Options Control Block

CEEOCB, the options control block (OCB), contains structures that describe the basic settings and parameters of each Language Environment run-time option. The following tables show the format of the OCB:

- Table 38 shows the type field definitions.
- Table 39 shows the OCB field descriptions.
- Table 40 on page 619 shows the OCB constants.
- Table 41 on page 620 shows the OCB cross reference information.

Table 38. Options Control Block (OCB) and Supplementary Options Control Block (SOCB) Type Field Definitions

Type	Definition
POINTER	A platform-dependent address pointer
BITSTRING	A string of bits of the defined length
CHARACTER	A string of characters (character array) of the defined length
DECIMAL	A two-byte or four-byte signed integer value
PTR INTOAREA	A two-byte or four-byte signed integer
SIGNED	A two-byte or four-byte signed integer
STRUCTURE	A mapping of a storage area; the displacement of a data item from the beginning of the OCB structure

Table 39. Options Control Block (OCB) Field Descriptions

Offsets		Type	Len	Name (Dim) (* = Reserved)
Dec	Hex			
0	(0)	STRUCTURE	516	CEEOCB
0	(0)	CHARACTER	8	CEEOCB_EYECATCHER
8	(8)	SIGNED	2	CEEOCB_VERSION_RELEASE
10	(A)	SIGNED	2	CEEOCB_LENGTH
12	(C)	PTR INTOAREA	4	CEEOCB_EV_PTR
16	(10)	ADDRESS	4	*
Because ISAINC and ISASIZE have a one-to-many mapping, and the nonoverrideable processing in the main loop of CEEBPRTO will validate whatever OCB entry is pointed to in the options table, ISAINC and ISASIZE point to this OCB entry. This entry must remain reserved and it must be nonoverrideable when generated in CEEDOPT.				
20	(14)	CHARACTER	8	CEEOCB_RSVD1
20	(14)	BITSTRING	1	CEEOCB_RSVD1_BIT_FLAG
		1...		CEEOCB_RSVD1_ON
		.1..		CEEOCB_RSVD1_NOOVERRIDE
		..11 111.		*
		1		CEEOCB_RSVD1_ON_V
21	(15)	BITSTRING	1	*

© Copyright IBM Corp. 1991, 2002

Table 39. Options Control Block (OCB) Field Descriptions (continued)

Offsets		Type	Len	Name (Dim) (* = Reserved)
Dec	Hex			
22	(16)	SIGNED	2	CEEOCB_RSVD1_WHERE_SET
24	(18)	PTR INTOAREA	4	CEEOCB_RSVD1_SUB_OPTIONS
28	(1C)	CHARACTER	8	CEEOCB_AIXBLD
28	(1C)	BITSTRING	1	CEEOCB_AIXBLD_BIT_FLAG
		1...		CEEOCB_AIXBLD_ON
		.1..		CEEOCB_AIXBLD_NOOVERRIDE
		..11 111.		*
		1		CEEOCB_AIXBLD_ON_V
29	(1D)	BITSTRING	1	*
30	(1E)	SIGNED	2	CEEOCB_AIXBLD_WHERE_SET
32	(20)	PTR INTOAREA	4	CEEOCB_AIXBLD_SUB_OPTIONS
36	(24)	CHARACTER	8	CEEOCB_ALL31
36	(24)	BITSTRING	1	CEEOCB_ALL31_BIT_FLAG
		1...		CEEOCB_ALL31_ON
		.1..		CEEOCB_ALL31_NOOVERRIDE
		..11 111.		*
		1		CEEOCB_ALL31_ON_V
37	(25)	BITSTRING	1	*
38	(26)	SIGNED	2	CEEOCB_ALL31_WHERE_SET
40	(28)	PTR INTOAREA	4	CEEOCB_ALL31_SUB_OPTIONS
44	(2C)	CHARACTER	8	CEEOCB_BELOWHEAP
44	(2C)	BITSTRING	1	CEEOCB_BELOWHEAP_BIT_FLAG
		1...		CEEOCB_BELOWHEAP_ON
		.1..		CEEOCB_BELOWHEAP_NOOVERRIDE
		..11 111.		*
		1		CEEOCB_BELOWHEAP_ON_V
45	(2D)	BITSTRING	1	*
46	(2E)	SIGNED	2	CEEOCB_BELOWHEAP_WHERE_SET
48	(30)	PTR INTOAREA	4	CEEOCB_BELOWHEAP_SUB_OPTIONS
52	(34)	CHARACTER	8	CEEOCB_CHECK
52	(34)	BITSTRING	1	CEEOCB_CHECK_BIT_FLAG
		1...		CEEOCB_CHECK_ON
		.1..		CEEOCB_CHECK_NOOVERRIDE
		..11 111.		*
		1		CEEOCB_CHECK_ON_V
53	(35)	BITSTRING	1	*

Table 39. Options Control Block (OCB) Field Descriptions (continued)

Offsets		Type	Len	Name (Dim) (* = Reserved)
Dec	Hex			
54	(36)	SIGNED	2	CEEOCB_CHECK_WHERE_SET
56	(38)	PTR INTOAREA	4	CEEOCB_CHECK_SUB_OPTIONS
60	(3C)	CHARACTER	8	CEEOCB_PLITASKCOUNT
60	(3C)	BITSTRING	1	CEEOCB_PLITASKCOUNT_BIT_FLAG
		1...		CEEOCB_PLITASKCOUNT_ON
		.1..		CEEOCB_PLITASKCOUNT_NOOVERRIDE
		..11 111.		*
		1		CEEOCB_PLITASKCOUNT_ON_V
61	(3D)	BITSTRING	1	*
62	(3E)	SIGNED	2	CEEOCB_PLITASKCOUNT_WHERE_SET
64	(40)	PTR INTOAREA	4	CEEOCB_PLITASKCOUNT_SUB_OPTIONS
68	(44)	CHARACTER	8	CEEOCB_ABTERMENC
68	(44)	BITSTRING	1	CEEOCB_ABTERMENC_BIT_FLAG
		1...		CEEOCB_ABTERMENC_ON
		.1..		CEEOCB_ABTERMENC_NOOVERRIDE
		..11 111.		*
		1		CEEOCB_ABTERMENC_ON_V
69	(45)	BITSTRING	1	*
70	(46)	SIGNED	2	CEEOCB_ABTERMENC_WHERE_SET
72	(48)	PTR INTOAREA	4	CEEOCB_ABTERMENC_SUB_OPTIONS
76	(4C)	CHARACTER	8	CEEOCB_COUNTRY
76	(4C)	BITSTRING	1	CEEOCB_COUNTRY_BIT_FLAG
		1...		CEEOCB_COUNTRY_ON
		.1..		CEEOCB_COUNTRY_NOOVERRIDE
		..11 111.		*
		1		CEEOCB_COUNTRY_ON_V
77	(4D)	BITSTRING	1	*
78	(4E)	SIGNED	2	CEEOCB_COUNTRY_WHERE_SET
80	(50)	PTR INTOAREA	4	CEEOCB_COUNTRY_SUB_OPTIONS
84	(54)	CHARACTER	8	CEEOCB_DEBUG
84	(54)	BITSTRING	1	CEEOCB_DEBUG_BIT_FLAG
		1...		CEEOCB_DEBUG_ON
		.1..		CEEOCB_DEBUG_NOOVERRIDE
		..11 111.		*
		1		CEEOCB_DEBUG_ON_V
85	(55)	BITSTRING	1	*

Table 39. Options Control Block (OCB) Field Descriptions (continued)

Offsets		Type	Len	Name (Dim) (* = Reserved)
Dec	Hex			
86	(56)	SIGNED	2	CEEOCB_DEBUG_WHERE_SET
88	(58)	PTR INTOAREA	4	CEEOCB_DEBUG_SUB_OPTIONS
92	(5C)	CHARACTER	8	CEEOCB_ERRCOUNT
92	(5C)	BITSTRING	1	CEEOCB_ERRCOUNT_BIT_FLAG
		1...		CEEOCB_ERRCOUNT_ON
		.1..		CEEOCB_ERRCOUNT_NOOVERRIDE
		..11 111.		*
		1		CEEOCB_ERRCOUNT_ON_V
93	(5D)	BITSTRING	1	*
94	(5E)	SIGNED	2	CEEOCB_ERRCOUNT_WHERE_SET
96	(60)	PTR INTOAREA	4	CEEOCB_ERRCOUNT_SUB_OPTIONS
100	(64)	CHARACTER	8	CEEOCB_FILEHIST
100	(64)	BITSTRING	1	CEEOCB_FILEHIST_BIT_FLAG
		1...		CEEOCB_FILEHIST_ON
		.1..		CEEOCB_FILEHIST_NOOVERRIDE
		..11 111.		*
		1		CEEOCB_FILEHIST_ON_V
101	(65)	BITSTRING	1	*
102	(66)	SIGNED	2	CEEOCB_FILEHIST_WHERE_SET
104	(68)	PTR INTOAREA	4	CEEOCB_FILEHIST_SUB_OPTIONS
108	(6C)	CHARACTER	8	CEEOCB_ENVAR
108	(6C)	BITSTRING	1	CEEOCB_ENVAR_BIT_FLAG
		1...		CEEOCB_ENVAR_ON
		.1..		CEEOCB_ENVAR_NOOVERRIDE
		..11 111.		*
		1		CEEOCB_ENVAR_ON_V
109	(6D)	BITSTRING	1	*
110	(6E)	SIGNED	2	CEEOCB_ENVAR_WHERE_SET
112	(70)	PTR INTOAREA	4	CEEOCB_ENVAR_SUB_OPTIONS
116	(74)	CHARACTER	8	CEEOCB_FLOWC
116	(74)	BITSTRING	1	CEEOCB_FLOWC_BIT_FLAG
		1...		CEEOCB_FLOWC_ON
		.1..		CEEOCB_FLOWC_NOOVERRIDE
		..11 111.		*
		1		CEEOCB_FLOWC_ON_V
117	(75)	BITSTRING	1	*

Table 39. Options Control Block (OCB) Field Descriptions (continued)

Offsets		Type	Len	Name (Dim) (* = Reserved)
Dec	Hex			
118	(76)	SIGNED	2	CEEOCB_FLOWC_WHERE_SET
120	(78)	PTR INTOAREA	4	CEEOCB_FLOWC_SUB_OPTIONS
124	(7C)	CHARACTER	8	CEEOCB_HEAP
124	(7C)	BITSTRING	1	CEEOCB_HEAP_BIT_FLAG
		1...		CEEOCB_HEAP_ON
		.1..		CEEOCB_HEAP_NOOVERRIDE
		..11 111.		*
		1		CEEOCB_HEAP_ON_V
125	(7D)	BITSTRING	1	*
126	(7E)	SIGNED	2	CEEOCB_HEAP_WHERE_SET
128	(80)	PTR INTOAREA	4	CEEOCB_HEAP_SUB_OPTIONS
132	(84)	CHARACTER	8	CEEOCB_INQPCOPN
132	(84)	BITSTRING	1	CEEOCB_INQPCOPN_BIT_FLAG
		1...		CEEOCB_INQPCOPN_ON
		.1..		CEEOCB_INQPCOPN_NOOVERRIDE
		..11 111.		*
		1		CEEOCB_INQPCOPN_ON_V
133	(85)	BITSTRING	1	*
134	(86)	SIGNED	2	CEEOCB_INQPCOPN_WHERE_SET
136	(88)	PTR INTOAREA	4	CEEOCB_INQPCOPN_SUB_OPTIONS
140	(8C)	CHARACTER	8	CEEOCB_INTERRUPT
140	(8C)	BITSTRING	1	CEEOCB_INTERRUPT_BIT_FLAG
		1...		CEEOCB_INTERRUPT_ON
		.1..		CEEOCB_INTERRUPT_NOOVERRIDE
		..11 111.		*
		1		CEEOCB_INTERRUPT_ON_V
141	(8D)	BITSTRING	1	*
142	(8E)	SIGNED	2	CEEOCB_INTERRUPT_WHERE_SET
144	(90)	PTR INTOAREA	4	CEEOCB_INTERRUPT_SUB_OPTIONS
148	(94)	CHARACTER	8	CEEOCB_LIBSTACK
148	(94)	BITSTRING	1	CEEOCB_LIBSTACK_BIT_FLAG
		1...		CEEOCB_LIBSTACK_ON
		.1..		CEEOCB_LIBSTACK_NOOVERRIDE
		..11 111.		*
		1		CEEOCB_LIBSTACK_ON_V
149	(95)	BITSTRING	1	*

Table 39. Options Control Block (OCB) Field Descriptions (continued)

Offsets		Type	Len	Name (Dim) (* = Reserved)
Dec	Hex			
150	(96)	SIGNED	2	CEEOCB_LIBSTACK_WHERE_SET
152	(98)	PTR INTOAREA	4	CEEOCB_LIBSTACK_SUB_OPTIONS
156	(9C)	CHARACTER	8	CEEOCB_MSGQ
156	(9C)	BITSTRING	1	CEEOCB_MSGQ_BIT_FLAG
		1...		CEEOCB_MSGQ_ON
		.1..		CEEOCB_MSGQ_NOOVERRIDE
		..11 111.		*
		1		CEEOCB_MSGQ_ON_V
157	(9D)	BITSTRING	1	*
158	(9E)	SIGNED	2	CEEOCB_MSGQ_WHERE_SET
160	(A0)	PTR INTOAREA	4	CEEOCB_MSGQ_SUB_OPTIONS
164	(A4)	CHARACTER	8	CEEOCB_MSGFILE
164	(A4)	BITSTRING	1	CEEOCB_MSGFILE_BIT_FLAG
		1...		CEEOCB_MSGFILE_ON
		.1..		CEEOCB_MSGFILE_NOOVERRIDE
		..11 111.		*
		1		CEEOCB_MSGFILE_ON_V
165	(A5)	BITSTRING	1	*
166	(A6)	SIGNED	2	CEEOCB_MSGFILE_WHERE_SET
168	(A8)	PTR INTOAREA	4	CEEOCB_MSGFILE_SUB_OPTIONS
172	(AC)	CHARACTER	8	CEEOCB_NATLANG
172	(AC)	BITSTRING	1	CEEOCB_NATLANG_BIT_FLAG
		1...		CEEOCB_NATLANG_ON
		.1..		CEEOCB_NATLANG_NOOVERRIDE
		..11 111.		*
		1		CEEOCB_NATLANG_ON_V
173	(AD)	BITSTRING	1	*
174	(AE)	SIGNED	2	CEEOCB_NATLANG_WHERE_SET
176	(B0)	PTR INTOAREA	4	CEEOCB_NATLANG_SUB_OPTIONS
180	(B4)	CHARACTER	8	CEEOCB_ERRUNIT
180	(B4)	BITSTRING	1	CEEOCB_ERRUNIT_BIT_FLAG
		1...		CEEOCB_ERRUNIT_ON
		.1..		CEEOCB_ERRUNIT_NOOVERRIDE
		..11 111.		*
		1		CEEOCB_ERRUNIT_ON_V
181	(B5)	BITSTRING	1	*

Table 39. Options Control Block (OCB) Field Descriptions (continued)

Offsets		Type	Len	Name (Dim) (* = Reserved)
Dec	Hex			
182	(B6)	SIGNED	2	CEEOCB_ERRUNIT_WHERE_SET
184	(B8)	PTR INTOAREA	4	CEEOCB_ERRUNIT_SUB_OPTIONS
188	(BC)	CHARACTER	8	CEEOCB_OCSTATUS
188	(BC)	BITSTRING	1	CEEOCB_OCSTATUS_BIT_FLAG
		1...		CEEOCB_OCSTATUS_ON
		.1..		CEEOCB_OCSTATUS_NOOVERRIDE
		..11 111.		*
		1		CEEOCB_OCSTATUS_ON_V
189	(BD)	BITSTRING	1	*
190	(BE)	SIGNED	2	CEEOCB_OCSTATUS_WHERE_SET
192	(C0)	PTR INTOAREA	4	CEEOCB_OCSTATUS_SUB_OPTIONS
196	(C4)	CHARACTER	8	CEEOCB_POSIX
196	(C4)	BITSTRING	1	CEEOCB_POSIX_BIT_FLAG
		1...		CEEOCB_POSIX_ON
		.1..		CEEOCB_POSIX_NOOVERRIDE
		..11 111.		*
		1		CEEOCB_POSIX_ON_V
197	(C5)	BITSTRING	1	*
198	(C6)	SIGNED	2	CEEOCB_POSIX_WHERE_SET
200	(C8)	PTR INTOAREA	4	CEEOCB_POSIX_SUB_OPTIONS
204	(CC)	CHARACTER	8	CEEOCB_RPTSTG
204	(CC)	BITSTRING	1	CEEOCB_RPTSTG_BIT_FLAG
		1...		CEEOCB_RPTSTG_ON
		.1..		CEEOCB_RPTSTG_NOOVERRIDE
		..11 111.		*
		1		CEEOCB_RPTSTG_ON_V
205	(CD)	BITSTRING	1	*
206	(CE)	SIGNED	2	CEEOCB_RPTSTG_WHERE_SET
208	(D0)	PTR INTOAREA	4	CEEOCB_RPTSTG_SUB_OPTIONS
212	(D4)	CHARACTER	8	CEEOCB_RTEREUS
212	(D4)	BITSTRING	1	CEEOCB_RTEREUS_BIT_FLAG
		1...		CEEOCB_RTEREUS_ON
		.1..		CEEOCB_RTEREUS_NOOVERRIDE
		..11 111.		*
		1		CEEOCB_RTEREUS_ON_V
213	(D5)	BITSTRING	1	*

Table 39. Options Control Block (OCB) Field Descriptions (continued)

Offsets		Type	Len	Name (Dim) (* = Reserved)
Dec	Hex			
214	(D6)	SIGNED	2	CEEOCB_RTEREUS_WHERE_SET
216	(D8)	PTR INTOAREA	4	CEEOCB_RTEREUS_SUB_OPTIONS
220	(DC)	CHARACTER	8	CEEOCB_SIMVRD
220	(DC)	BITSTRING	1	CEEOCB_SIMVRD_BIT_FLAG
		1...		CEEOCB_SIMVRD_ON
		.1..		CEEOCB_SIMVRD_NOOVERRIDE
		..11 111.		*
		1		CEEOCB_SIMVRD_ON_V
221	(DD)	BITSTRING	1	*
222	(DE)	SIGNED	2	CEEOCB_SIMVRD_WHERE_SET
224	(E0)	PTR INTOAREA	4	CEEOCB_SIMVRD_SUB_OPTIONS
228	(E4)	CHARACTER	8	CEEOCB_STACK
228	(E4)	BITSTRING	1	CEEOCB_STACK_BIT_FLAG
		1...		CEEOCB_STACK_ON
		.1..		CEEOCB_STACK_NOOVERRIDE
		..11 111.		*
		1		CEEOCB_STACK_ON_V
229	(E5)	BITSTRING	1	*
230	(E6)	SIGNED	2	CEEOCB_STACK_WHERE_SET
232	(E8)	PTR INTOAREA	4	CEEOCB_STACK_SUB_OPTIONS
236	(EC)	CHARACTER	8	CEEOCB_STORAGE
236	(EC)	BITSTRING	1	CEEOCB_STORAGE_BIT_FLAG
		1...		CEEOCB_STORAGE_ON
		.1..		CEEOCB_STORAGE_NOOVERRIDE
		..11 111.		*
		1		CEEOCB_STORAGE_ON_V
237	(ED)	BITSTRING	1	*
238	(EE)	SIGNED	2	CEEOCB_STORAGE_WHERE_SET
240	(F0)	PTR INTOAREA	4	CEEOCB_STORAGE_SUB_OPTIONS
244	(F4)	CHARACTER	8	CEEOCB_AUTOTASK
244	(F4)	BITSTRING	1	CEEOCB_AUTOTASK_BIT_FLAG
		1...		CEEOCB_AUTOTASK_ON
		.1..		CEEOCB_AUTOTASK_NOOVERRIDE
		..11 111.		*
		1		CEEOCB_AUTOTASK_ON_V
245	(F5)	BITSTRING	1	*

Table 39. Options Control Block (OCB) Field Descriptions (continued)

Offsets		Type	Len	Name (Dim) (* = Reserved)
Dec	Hex			
246	(F6)	SIGNED	2	CEEOCB_AUTOTASK_WHERE_SET
248	(F8)	PTR INTOAREA	4	CEEOCB_AUTOTASK_SUB_OPTIONS
252	(FC)	CHARACTER	8	CEEOCB_TRACE
252	(FC)	BITSTRING	1	CEEOCB_TRACE_BIT_FLAG
		1...		CEEOCB_TRACE_ON
		.1..		CEEOCB_TRACE_NOOVERRIDE
		..11 111.		*
		1		CEEOCB_TRACE_ON_V
253	(FD)	BITSTRING	1	*
254	(FE)	SIGNED	2	CEEOCB_TRACE_WHERE_SET
256	(100)	PTR INTOAREA	4	CEEOCB_TRACE_SUB_OPTIONS
260	(104)	CHARACTER	8	CEEOCB_THREADHEAP
260	(104)	BITSTRING	1	CEEOCB_THREADHEAP_BIT_FLAG
		1...		CEEOCB_THREADHEAP_ON
		.1..		CEEOCB_THREADHEAP_NOOVERRIDE
		..11 111.		*
		1		CEEOCB_THREADHEAP_ON_V
261	(105)	BITSTRING	1	*
262	(106)	SIGNED	2	CEEOCB_THREADHEAP_WHERE_SET
264	(108)	PTR INTOAREA	4	CEEOCB_THREADHEAP_SUB_OPTIONS
268	(10C)	CHARACTER	8	CEEOCB_TEST
268	(10C)	BITSTRING	1	CEEOCB_TEST_BIT_FLAG
		1...		CEEOCB_TEST_ON
		.1..		CEEOCB_TEST_NOOVERRIDE
		..11 111.		*
		1		CEEOCB_TEST_ON_V
269	(10D)	BITSTRING	1	*
270	(10E)	SIGNED	2	CEEOCB_TEST_WHERE_SET
272	(110)	PTR INTOAREA	4	CEEOCB_TEST_SUB_OPTIONS
276	(114)	CHARACTER	8	CEEOCB_THREADSTACK
276	(114)	BITSTRING	1	CEEOCB_THREADSTACK_BIT_FLAG
		1...		CEEOCB_THREADSTACK_ON
		.1..		CEEOCB_THREADSTACK_NOOVERRIDE
		..11 111.		*
		1		CEEOCB_THREADSTACK_ON_V
277	(115)	BITSTRING	1	*

Table 39. Options Control Block (OCB) Field Descriptions (continued)

Offsets		Type	Len	Name (Dim) (* = Reserved)
Dec	Hex			
278	(116)	SIGNED	2	CEEOCB_THREADSTACK_WHERE_SET
280	(118)	PTR INTOAREA	4	CEEOCB_THREADSTACK_SUB_OPTIONS
284	(11C)	CHARACTER	8	CEEOCB_TRAP
284	(11C)	BITSTRING	1	CEEOCB_TRAP_BIT_FLAG
		1...		CEEOCB_TRAP_ON
		.1..		CEEOCB_TRAP_NOOVERRIDE
		..11 111.		*
		1		CEEOCB_TRAP_ON_V
285	(11D)	BITSTRING	1	*
286	(11E)	SIGNED	2	CEEOCB_TRAP_WHERE_SET
288	(120)	PTR INTOAREA	4	CEEOCB_TRAP_SUB_OPTIONS
292	(124)	CHARACTER	8	CEEOCB_UPSI
292	(124)	BITSTRING	1	CEEOCB_UPSI_BIT_FLAG
		1...		CEEOCB_UPSI_ON
		.1..		CEEOCB_UPSI_NOOVERRIDE
		..11 111.		*
		1		CEEOCB_UPSI_ON_V
293	(125)	BITSTRING	1	*
294	(126)	SIGNED	2	CEEOCB_UPSI_WHERE_SET
296	(128)	PTR INTOAREA	4	CEEOCB_UPSI_SUB_OPTIONS
300	(12C)	CHARACTER	8	CEEOCB_VCTRSAVE
300	(12C)	BITSTRING	1	CEEOCB_VCTRSAVE_BIT_FLAG
		1...		CEEOCB_VCTRSAVE_ON
		.1..		CEEOCB_VCTRSAVE_NOOVERRIDE
		..11 111.		*
		1		CEEOCB_VCTRSAVE_ON_V
301	(12D)	BITSTRING	1	*
302	(12E)	SIGNED	2	CEEOCB_VCTRSAVE_WHERE_SET
304	(130)	PTR INTOAREA	4	CEEOCB_VCTRSAVE_SUB_OPTIONS
308	(134)	CHARACTER	8	CEEOCB_PRTUNIT
308	(134)	BITSTRING	1	CEEOCB_PRTUNIT_BIT_FLAG
		1...		CEEOCB_PRTUNIT_ON
		.1..		CEEOCB_PRTUNIT_NOOVERRIDE
		..11 111.		*
		1		CEEOCB_PRTUNIT_ON_V
309	(135)	BITSTRING	1	*

Table 39. Options Control Block (OCB) Field Descriptions (continued)

Offsets		Type	Len	Name (Dim) (* = Reserved)
Dec	Hex			
310	(136)	SIGNED	2	CEEOCB_PRTUNIT_WHERE_SET
312	(138)	PTR INTOAREA	4	CEEOCB_PRTUNIT_SUB_OPTIONS
316	(13C)	CHARACTER	8	CEEOCB_XUFLOW
316	(13C)	BITSTRING	1	CEEOCB_XUFLOW_BIT_FLAG
		1...		CEEOCB_XUFLOW_ON
		.1..		CEEOCB_XUFLOW_NOOVERRIDE
		..11 111.		*
		1		CEEOCB_XUFLOW_ON_V
317	(13D)	BITSTRING	1	*
318	(13E)	SIGNED	2	CEEOCB_XUFLOW_WHERE_SET
320	(140)	PTR INTOAREA	4	CEEOCB_XUFLOW_SUB_OPTIONS
324	(144)	CHARACTER	8	CEEOCB_CBLOPTS
324	(144)	BITSTRING	1	CEEOCB_CBLOPTS_BIT_FLAG
		1...		CEEOCB_CBLOPTS_ON
		.1..		CEEOCB_CBLOPTS_NOOVERRIDE
		..11 111.		*
		1		CEEOCB_CBLOPTS_ON_V
325	(145)	BITSTRING	1	*
326	(146)	SIGNED	2	CEEOCB_CBLOPTS_WHERE_SET
328	(148)	PTR INTOAREA	4	CEEOCB_CBLOPTS_SUB_OPTIONS
332	(14C)	CHARACTER	8	CEEOCB_NONIPTSTACK
332	(14C)	BITSTRING	1	CEEOCB_NONIPTSTACK_BIT_FLAG
		1...		CEEOCB_NONIPTSTACK_ON
		.1..		CEEOCB_NONIPTSTACK_NOOVERRIDE
		..11 111.		*
		1		CEEOCB_NONIPTSTACK_ON_V
333	(14D)	BITSTRING	1	*
334	(14E)	SIGNED	2	CEEOCB_NONIPTSTACK_WHERE_SET
336	(150)	PTR INTOAREA	4	CEEOCB_NONIPTSTACK_SUB_OPTIONS
340	(154)	CHARACTER	8	CEEOCB_RPTOPTS
340	(154)	BITSTRING	1	CEEOCB_RPTOPTS_BIT_FLAG
		1...		CEEOCB_RPTOPTS_ON
		.1..		CEEOCB_RPTOPTS_NOOVERRIDE
		..11 111.		*
		1		CEEOCB_RPTOPTS_ON_V
341	(155)	BITSTRING	1	*

Table 39. Options Control Block (OCB) Field Descriptions (continued)

Offsets		Type	Len	Name (Dim) (* = Reserved)
Dec	Hex			
342	(156)	SIGNED	2	CEEOCB_RPTOPTS_WHERE_SET
344	(158)	PTR INTOAREA	4	CEEOCB_RPTOPTS_SUB_OPTIONS
348	(15C)	CHARACTER	8	CEEOCB_ANYHEAP
348	(15C)	BITSTRING	1	CEEOCB_ANYHEAP_BIT_FLAG
		1...		CEEOCB_ANYHEAP_ON
		.1..		CEEOCB_ANYHEAP_NOOVERRIDE
		..11 111.		*
		1		CEEOCB_ANYHEAP_ON_V
349	(15D)	BITSTRING	1	*
350	(15E)	SIGNED	2	CEEOCB_ANYHEAP_WHERE_SET
352	(160)	PTR INTOAREA	4	CEEOCB_ANYHEAP_SUB_OPTIONS
356	(164)	CHARACTER	8	CEEOCB_ABPERC
356	(164)	BITSTRING	1	CEEOCB_ABPERC_BIT_FLAG
		1...		CEEOCB_ABPERC_ON
		.1..		CEEOCB_ABPERC_NOOVERRIDE
		..11 111.		*
		1		CEEOCB_ABPERC_ON_V
357	(165)	BITSTRING	1	*
358	(166)	SIGNED	2	CEEOCB_ABPERC_WHERE_SET
360	(168)	PTR INTOAREA	4	CEEOCB_ABPERC_SUB_OPTIONS
364	(16C)	CHARACTER	8	CEEOCB_TERMTHDACT
364	(16C)	BITSTRING	1	CEEOCB_TERMTHDACT_BIT_FLAG
		1...		CEEOCB_TERMTHDACT_ON
		.1..		CEEOCB_TERMTHDACT_NOOVERRIDE
		..11 111.		*
		1		CEEOCB_TERMTHDACT_ON_V
365	(16D)	BITSTRING	1	*
366	(16E)	SIGNED	2	CEEOCB_TERMTHDACT_WHERE_SET
368	(170)	PTR INTOAREA	4	CEEOCB_TERMTHDACT_SUB_OPTIONS
372	(174)	CHARACTER	8	CEEOCB_DEPTHCONDLMT
372	(174)	BITSTRING	1	CEEOCB_DEPTHCONDLMT_BIT_FLAG
		1...		CEEOCB_DEPTHCONDLMT_ON
		.1..		CEEOCB_DEPTHCONDLMT_NOOVERRIDE
		..11 111.		*
		1		CEEOCB_DEPTHCONDLMT_ON_V
373	(175)	BITSTRING	1	*

Table 39. Options Control Block (OCB) Field Descriptions (continued)

Offsets		Type	Len	Name (Dim) (* = Reserved)
Dec	Hex			
374	(176)	SIGNED	2	CEEOCB_DEPTHCONDLMT_WHERE_SET
376	(178)	PTR INTOAREA	4	CEEOCB_DEPTHCONDLMT_SUB_OPTIONS
380	(17C)	CHARACTER	8	CEEOCB_CBLPSHPOP
380	(17C)	BITSTRING	1	CEEOCB_CBLPSHPOP_BIT_FLAG
		1...		CEEOCB_CBLPSHPOP_ON
		.1..		CEEOCB_CBLPSHPOP_NOOVERRIDE
		..11 111.		*
		1		CEEOCB_CBLPSHPOP_ON_V
381	(17D)	BITSTRING	1	*
382	(17E)	SIGNED	2	CEEOCB_CBLPSHPOP_WHERE_SET
384	(180)	PTR INTOAREA	4	CEEOCB_CBLPSHPOP_SUB_OPTIONS
388	(184)	CHARACTER	8	CEEOCB_CBLQDA
388	(184)	BITSTRING	1	CEEOCB_CBLQDA_BIT_FLAG
		1...		CEEOCB_CBLQDA_ON
		.1..		CEEOCB_CBLQDA_NOOVERRIDE
		..11 111.		*
		1		CEEOCB_CBLQDA_ON_V
389	(185)	BITSTRING	1	*
390	(186)	SIGNED	2	CEEOCB_CBLQDA_WHERE_SET
392	(188)	PTR INTOAREA	4	CEEOCB_CBLQDA_SUB_OPTIONS
396	(18C)	CHARACTER	8	CEEOCB_PUNUNIT
396	(18C)	BITSTRING	1	CEEOCB_PUNUNIT_BIT_FLAG
		1...		CEEOCB_PUNUNIT_ON
		.1..		CEEOCB_PUNUNIT_NOOVERRIDE
		..11 111.		*
		1		CEEOCB_PUNUNIT_ON_V
397	(18D)	BITSTRING	1	*
398	(18E)	SIGNED	2	CEEOCB_PUNUNIT_WHERE_SET
400	(190)	PTR INTOAREA	4	CEEOCB_PUNUNIT_SUB_OPTIONS
404	(194)	CHARACTER	8	CEEOCB_RDRUNIT
404	(194)	BITSTRING	1	CEEOCB_RDRUNIT_BIT_FLAG
		1...		CEEOCB_RDRUNIT_ON
		.1..		CEEOCB_RDRUNIT_NOOVERRIDE
		..11 111.		*
		1		CEEOCB_RDRUNIT_ON_V
405	(195)	BITSTRING	1	*

Table 39. Options Control Block (OCB) Field Descriptions (continued)

Offsets		Type	Len	Name (Dim) (* = Reserved)
Dec	Hex			
406	(196)	SIGNED	2	CEEOCB_RDRUNIT_WHERE_SET
408	(198)	PTR INTOAREA	4	CEEOCB_RDRUNIT_SUB_OPTIONS
412	(19C)	CHARACTER	8	CEEOCB_RECPAD
412	(19C)	BITSTRING	1	CEEOCB_RECPAD_BIT_FLAG
		1...		CEEOCB_RECPAD_ON
		.1..		CEEOCB_RECPAD_NOOVERRIDE
		..11 111.		*
		1		CEEOCB_RECPAD_ON_V
413	(19D)	BITSTRING	1	*
414	(19E)	SIGNED	2	CEEOCB_RECPAD_WHERE_SET
416	(1A0)	PTR INTOAREA	4	CEEOCB_RECPAD_SUB_OPTIONS
420	(1A4)	CHARACTER	8	CEEOCB_USRHDLR
420	(1A4)	BITSTRING	1	CEEOCB_USRHDLR_BIT_FLAG
		1...		CEEOCB_USRHDLR_ON
		.1..		CEEOCB_USRHDLR_NOOVERRIDE
		..11 111.		*
		1		CEEOCB_USRHDLR_ON_V
421	(1A5)	BITSTRING	1	*
422	(1A6)	SIGNED	2	CEEOCB_USRHDLR_WHERE_SET
424	(1A8)	PTR INTOAREA	4	CEEOCB_USRHDLR_SUB_OPTIONS
428	(1AC)	CHARACTER	8	CEEOCB_NAMELIST
428	(1AC)	BITSTRING	1	CEEOCB_NAMELIST_BIT_FLAG
		1...		CEEOCB_NAMELIST_ON
		.1..		CEEOCB_NAMELIST_NOOVERRIDE
		..11 111.		*
		1		CEEOCB_NAMELIST_ON_V
429	(1AD)	BITSTRING	1	*
430	(1AE)	SIGNED	2	CEEOCB_NAMELIST_WHERE_SET
432	(1B0)	PTR INTOAREA	4	CEEOCB_NAMELIST_SUB_OPTIONS
436	(1B4)	CHARACTER	8	CEEOCB_PC
436	(1B4)	BITSTRING	1	CEEOCB_PC_BIT_FLAG
		1...		CEEOCB_PC_ON
		.1..		CEEOCB_PC_NOOVERRIDE
		..11 111.		*
		1		CEEOCB_PC_ON_V
437	(1B5)	BITSTRING	1	*

Table 39. Options Control Block (OCB) Field Descriptions (continued)

Offsets		Type	Len	Name (Dim) (* = Reserved)
Dec	Hex			
438	(1B6)	SIGNED	2	CEEOCB_PC_WHERE_SET
440	(1B8)	PTR INTOAREA	4	CEEOCB_PC_SUB_OPTIONS
444	(1BC)	CHARACTER	8	CEEOCB_LIBRARY
444	(1BC)	BITSTRING	1	CEEOCB_LIBRARY_BIT_FLAG
		1...		CEEOCB_LIBRARY_ON
		.1..		CEEOCB_LIBRARY_NOOVERRIDE
		..11 111.		*
		1		CEEOCB_LIBRARY_ON_V
445	(1BD)	BITSTRING	1	*
446	(1BE)	SIGNED	2	CEEOCB_LIBRARY_WHERE_SET
448	(1C0)	PTR INTOAREA	4	CEEOCB_LIBRARY_SUB_OPTIONS
452	(1C4)	CHARACTER	8	CEEOCB_VERSION
452	(1C4)	BITSTRING	1	CEEOCB_VERSION_BIT_FLAG
		1...		CEEOCB_VERSION_ON
		.1..		CEEOCB_VERSION_NOOVERRIDE
		..11 111.		*
		1		CEEOCB_VERSION_ON_V
453	(1C5)	BITSTRING	1	*
454	(1C6)	SIGNED	2	CEEOCB_VERSION_WHERE_SET
456	(1C8)	PTR INTOAREA	4	CEEOCB_VERSION_SUB_OPTIONS
460	(1CC)	CHARACTER	8	CEEOCB_RTLS
460	(1CC)	BITSTRING	1	CEEOCB_RTLS_BIT_FLAG
		1...		CEEOCB_RTLS_ON
		.1..		CEEOCB_RTLS_NOOVERRIDE
		..11 111.		*
		1		CEEOCB_RTLS_ON_V
461	(1CD)	BITSTRING	1	*
462	(1CE)	SIGNED	2	CEEOCB_RTLS_WHERE_SET
464	(1DE)	PTR INTOAREA	4	CEEOCB_RTLS_SUB_OPTIONS
468	(1D4)	CHARACTER	8	CEEOCB_HEAPCHK
468	(1D4)	BITSTRING	1	CEEOCB_HEAPCHK_BIT_FLAG
		1...		CEEOCB_HEAPCHK_ON
		.1..		CEEOCB_HEAPCHK_NOOVERRIDE
		..11 111.		*
		1		CEEOCB_HEAPCHK_ON_V
469	(1D5)	BITSTRING	1	*

Table 39. Options Control Block (OCB) Field Descriptions (continued)

Offsets		Type	Len	Name (Dim) (* = Reserved)
Dec	Hex			
470	(1D6)	SIGNED	2	CEEOCB_HEAPCHK_WHERE_SET
472	(1D8)	PTR INTOAREA	4	CEEOCB_HEAPCHK_SUB_OPTIONS
476	(1DC)	CHARACTER	8	CEEOCB_PROFILE
476	(1DC)	BITSTRING	1	CEEOCB_PROFILE_BIT_FLAG
		1...		CEEOCB_PROFILE_ON
		.1..		CEEOCB_PROFILE_NOOVERRIDE
		..11 111.		*
		1		CEEOCB_PROFILE_ON_V
477	(1DD)	BITSTRING	1	*
478	(1DE)	SIGNED	2	CEEOCB_PROFILE_WHERE_SET
480	(1E0)	PTR INTOAREA	4	CEEOCB_PROFILE_SUB_OPTIONS
484	(1E4)	CHARACTER	8	CEEOCB_HEAPPOOLS
484	(1E4)	BITSTRING	1	CEEOCB_HEAPPOOLS_BIT_FLAG
		1...		CEEOCB_HEAPPOOLS_ON
		.1..		CEEOCB_HEAPPOOLS_NOOVERRIDE
		..11 111.		*
		1		CEEOCB_HEAPPOOLS_ON_V
485	(1E5)	BITSTRING	1	*
486	(1E6)	SIGNED	2	CEEOCB_HEAPPOOLS_WHERE_SET
488	(1E8)	PTR INTOAREA	4	CEEOCB_HEAPPOOLS_SUB_OPTIONS
492	(1EC)	CHARACTER	8	CEEOCB_INFOMSGFILTER
492	(1EC)	BITSTRING	1	CEEOCB_INFOMSGFILTER_BIT_FLAG
		1...		CEEOCB_INFOMSGFILTER_ON
		.1..		CEEOCB_INFOMSGFILTER_NOOVERRIDE
		..11 111.		*
		1		CEEOCB_INFOMSGFILTER_ON_V
493	(1ED)	BITSTRING	1	*
494	(1EE)	SIGNAL	2	CEEOCB_INFOMSGFILTER_WHERE_SET
496	(1F0)	PTR INTOAREA	4	CEEOCB_INFOMSGFILTER_SUB_OPTIONS
500	(1F4)	CHARACTER	8	CEEOCB_XPLINK
500	(1F4)	BITSTRING	1	CEEOCB_XPLINK_BIT_FLAG
		1...		CEEOCB_XPLINK_ON
		.1..		CEEOCB_XPLINK_NOOVERRIDE
		..11 111.		*
		1		CEEOCB_XPLINK_ON_V
501	(1F5)	BITSTRING	1	*

Table 39. Options Control Block (OCB) Field Descriptions (continued)

Offsets		Type	Len	Name (Dim) (* = Reserved)
Dec	Hex			
502	(1F6)	SIGNAL	2	CEEOCB_XPLINK_WHERE_SET
504	(1F8)	PTR INTOAREA	4	CEEOCB_XPLINK_SUB_OPTIONS
508	(1FC)	CHARACTER	8	CEEOCB_FILETAG
508	(1FC)	BITSTRING	1	CEEOCB_FILETAG_BIT_FLAG
		1...		CEEOCB_FILETAG_ON
		.1..		CEEOCB_FILETAG_NOOVERRIDE
		..11 111.		*
		1		CEEOCB_FILETAG_ON_V
509	(1FD)	BITSTRING	1	*
510	(1FE)	SIGNAL	2	CEEOCB_FILETAG_WHERE_SET
512	(200)	PTR INTOAREA	4	CEEOCB_FILETAG_SUB_OPTIONS
Start of suboption section				
0	(0)	STRUCTURE	8	CEEOCB_ABTERMENC_SUB_OPTS
0	(0)	BITSTRING	4	CEEOCB_ABTERMENC_SUB_OPTS_V
		1...		CEEOCB_ABTERMENC_EXITMODE_V
1	(1)	BITSTRING	3	*
4	(4)	SIGNED	4	CEEOCB_ABTERMENC_EXITMODE
0	(0)	STRUCTURE	16	CEEOCB_BELOWHEAP_SUB_OPTS
0	(0)	BITSTRING	4	CEEOCB_BELOWHEAP_SUB_OPTS_V
		1...		CEEOCB_BELOWHEAP_INIT_SIZE_V
		.1..		CEEOCB_BELOWHEAP_INCR_SIZE_V
		..1.		CEEOCB_BELOWHEAP_DISPOSITION_V
1	(1)	BITSTRING	3	*
4	(4)	SIGNED	4	CEEOCB_BELOWHEAP_INIT_SIZE
8	(8)	SIGNED	4	CEEOCB_BELOWHEAP_INCR_SIZE
12	(C)	BITSTRING	1	CEEOCB_BELOWHEAP_SUB_BIT_FLAG
		1...		CEEOCB_BELOWHEAP_LOCATION
		.1..		CEEOCB_BELOWHEAP_DISPOSITION
		..11 1111		*
13	(D)	BITSTRING	3	*
0	(0)	STRUCTURE	8	CEEOCB_COUNTRY_SUB_OPTS
0	(0)	BITSTRING	4	CEEOCB_COUNTRY_SUB_OPTS_V
		1...		CEEOCB_COUNTRY_CODE_V
1	(1)	BITSTRING	3	*
4	(4)	CHARACTER	2	CEEOCB_COUNTRY_CODE
6	(6)	BITSTRING	2	*

Table 39. Options Control Block (OCB) Field Descriptions (continued)

Offsets		Type	Len	Name (Dim) (* = Reserved)
Dec	Hex			
0	(0)	STRUCTURE	8	CEEOCB_DEPTHCONDLMT_SUB_OPTS
0	(0)	BITSTRING	4	CEEOCB_DEPTHCONDLMT_SUB_OPTS_V
		1...		CEEOCB_DEPTHCONDLMT_N_V
1	(1)	BITSTRING	3	*
4	(4)	SIGNED	4	CEEOCB_DEPTHCONDLMT_N
0	(0)	STRUCTURE	8	CEEOCB_ENVAR_SUB_OPTS
0	(0)	BITSTRING	4	CEEOCB_ENVAR_SUB_OPTS_V
		1...		CEEOCB_ENVAR_STRING_V
1	(1)	BITSTRING	3	*
4	(4)	PTR INTOAREA	4	CEEOCB_ENVAR_STRING_O
0	(0)	STRUCTURE	252	CEEOCB_ENVAR_STRING_S
0	(0)	CHARACTER	252	CEEOCB_ENVAR_STRING
0	(0)	SIGNED	2	CEEOCB_ENVAR_STRING_LENGTH
2	(2)	CHARACTER	250	CEEOCB_ENVAR_STRING_STRING
0	(0)	STRUCTURE	8	CEEOCB_ERRCOUNT_SUB_OPTS
0	(0)	BITSTRING	4	CEEOCB_ERRCOUNT_SUB_OPTS_V
		1...		CEEOCB_ERRCOUNT_N_V
1	(1)	BITSTRING	3	*
4	(4)	SIGNED	4	CEEOCB_ERRCOUNT_N
0	(0)	STRUCTURE	8	CEEOCB_ERRUNIT_SUB_OPTS
0	(0)	BITSTRING	4	CEEOCB_ERRUNIT_SUB_OPTS_V
		1...		CEEOCB_ERRUNIT_N_V
1	(1)	BITSTRING	3	*
4	(4)	SIGNED	4	CEEOCB_ERRUNIT_N
0	(0)	STRUCTURE	8	CEEOCB_FLOWC_SUB_OPTS
0	(0)	BITSTRING	4	CEEOCB_FLOWC_SUB_OPTS_V
		1...		CEEOCB_FLOWC_MAX_PROCEDURES_V
1	(1)	BITSTRING	3	*
4	(4)	SIGNED	4	CEEOCB_FLOWC_MAX_PROCEDURES
0	(0)	STRUCTURE	24	CEEOCB_HEAP_SUB_OPTS
0	(0)	BITSTRING	4	CEEOCB_HEAP_SUB_OPTS_V
		1...		CEEOCB_HEAP_INIT_SIZE_V
		.1..		CEEOCB_HEAP_INCR_SIZE_V
		..1.		CEEOCB_HEAP_LOCATION_V
		...1		CEEOCB_HEAP_DISPOSITION_V
		.... 1...		CEEOCB_HEAP_INITSZ24_V
		.... .1..		CEEOCB_HEAP_INCRSZ24_V

Table 39. Options Control Block (OCB) Field Descriptions (continued)

Offsets		Type	Len	Name (Dim) (* = Reserved)
Dec	Hex			
1	(1)	BITSTRING	3	*
4	(4)	SIGNED	4	CEEOCB_HEAP_INIT_SIZE
8	(8)	SIGNED	4	CEEOCB_HEAP_INCR_SIZE
12	(C)	BITSTRING	1	CEEOCB_HEAP_SUB_BIT_FLAG
		1...		CEEOCB_HEAP_LOCATION
		.1..		CEEOCB_HEAP_DISPOSITION
		..11 1111		*
13	(D)	BITSTRING	3	*
16	(10)	SIGNED	4	CEEOCB_HEAP_INITSZ24
20	(14)	SIGNED	4	CEEOCB_HEAP_INCRSZ24
0	(0)	STRUCTURE	16	CEEOCB_LIBSTACK_SUB_OPTS
0	(0)	BITSTRING	4	CEEOCB_LIBSTACK_SUB_OPTS_V
		1...		CEEOCB_LIBSTACK_INIT_SIZE_V
		.1..		CEEOCB_LIBSTACK_INCR_SIZE_V
		..1.		CEEOCB_LIBSTACK_DISPOSITION_V
1	(1)	BITSTRING	3	*
4	(4)	SIGNED	4	CEEOCB_LIBSTACK_INIT_SIZE
8	(8)	SIGNED	4	CEEOCB_LIBSTACK_INCR_SIZE
12	(C)	BITSTRING	1	CEEOCB_LIBSTACK_SUB_BIT_FLAG
		1...		CEEOCB_LIBSTACK_LOCATION
		.1..		CEEOCB_LIBSTACK_DISPOSITION
		..11 1111		*
13	(D)	BITSTRING	3	*
0	(0)	STRUCTURE	20	CEEOCB_MSGFILE_SUB_OPTS
0	(0)	BITSTRING	4	CEEOCB_MSGFILE_SUB_OPTS_V
		1...		CEEOCB_MSGFILE_DDNAME_V
		.1..		CEEOCB_MSGFILE_RECFM_V
		..1.		CEEOCB_MSGFILE_LRECL_V
		...1		CEEOCB_MSGFILE_BLKSIZE_V
		.... 1...		CEEOCB_MSGFILE_DDNAME_ENQ_V
1	(1)	BITSTRING	3	*
4	(4)	PTR INTOAREA	4	CEEOCB_MSGFILE_DDNAME_O
8	(8)	PTR INTOAREA	4	CEEOCB_MSGFILE_RECFM_O
12	(C)	SIGNED	4	CEEOCB_MSGFILE_LRECL
16	(10)	SIGNED	4	CEEOCB_MSGFILE_BLKSIZE
0	(0)	STRUCTURE	12	CEEOCB_MSGFILE_DDNAME_S

Table 39. Options Control Block (OCB) Field Descriptions (continued)

Offsets		Type	Len	Name (Dim) (* = Reserved)
Dec	Hex			
0	(0)	CHARACTER	10	CEEOCB_MSGFILE_DDNAME
0	(0)	SIGNED	2	CEEOCB_MSGFILE_DDNAME_LENGTH
2	(2)	CHARACTER	8	CEEOCB_MSGFILE_DDNAME_STRING
10	(A)	CHARACTER	1	*
11	(B)	CHARACTER	1	CEEOCB_MSGFILE_DDNAME_ENQ
0	(0)	STRUCTURE	8	CEEOCB_MSGFILE_RECFM_S
0	(0)	CHARACTER	6	CEEOCB_MSGFILE_RECFM
0	(0)	SIGNED	2	CEEOCB_MSGFILE_RECFM_LENGTH
2	(2)	CHARACTER	4	CEEOCB_MSGFILE_RECFM_STRING
6	(6)	CHARACTER	2	*
0	(0)	STRUCTURE	8	CEEOCB_NATLANG_SUB_OPTS
0	(0)	BITSTRING	4	CEEOCB_NATLANG_SUB_OPTS_V
		1...		CEEOCB_NATLANG_NATIONAL_LANG_V
1	(1)	BITSTRING	3	*
4	(4)	CHARACTER	3	CEEOCB_NATLANG_NATIONAL_LANG
7	(7)	BITSTRING	1	CEEOCB_NATLANG_SUB_BIT_FLAG
		1...		CEEOCB_NATLANG_UENGLISH
0	(0)	STRUCTURE	8	CEEOCB_PRTUNIT_SUB_OPTS
0	(0)	BITSTRING	4	CEEOCB_PRTUNIT_SUB_OPTS_V
		1...		CEEOCB_PRTUNIT_N_V
1	(1)	BITSTRING	3	*
4	(4)	SIGNED	4	CEEOCB_PRTUNIT_N
0	(0)	STRUCTURE	8	CEEOCB_PUNUNIT_SUB_OPTS
0	(0)	BITSTRING	4	CEEOCB_PUNUNIT_SUB_OPTS_V
		1...		CEEOCB_PUNUNIT_N_V
1	(1)	BITSTRING	3	*
4	(4)	SIGNED	4	CEEOCB_PUNUNIT_N
0	(0)	STRUCTURE	8	CEEOCB_RDRUNIT_SUB_OPTS
0	(0)	BITSTRING	4	CEEOCB_RDRUNIT_SUB_OPTS_V
		1...		CEEOCB_RDRUNIT_N_V
1	(1)	BITSTRING	3	*
4	(4)	SIGNED	4	CEEOCB_RDRUNIT_N
0	(0)	STRUCTURE	8	CEEOCB_RECPAD_SUB_OPTS
0	(0)	BITSTRING	4	CEEOCB_RECPAD_SUB_OPTS_V
		1...		CEEOCB_RECPAD_LEVEL_V
1	(1)	BITSTRING	3	*
4	(4)	SIGNED	4	CEEOCB_RECPAD_LEVEL
0	(0)	STRUCTURE	16	CEEOCB_STACK_SUB_OPTS

Table 39. Options Control Block (OCB) Field Descriptions (continued)

Offsets		Type	Len	Name (Dim) (* = Reserved)
Dec	Hex			
0	(0)	BITSTRING	4	CEEOCB_STACK_SUB_OPTS_V
		1...		CEEOCB_STACK_INIT_SIZE_V
		.1..		CEEOCB_STACK_INCR_SIZE_V
		..1.		CEEOCB_STACK_LOCATION_V
		...1		CEEOCB_STACK_DISPOSITION_V
1	(1)	BITSTRING	3	*
4	(4)	SIGNED	4	CEEOCB_STACK_INIT_SIZE
8	(8)	SIGNED	4	CEEOCB_STACK_INCR_SIZE
12	(C)	BITSTRING	1	CEEOCB_STACK_SUB_BIT_FLAG
		1...		CEEOCB_STACK_LOCATION
		.1..		CEEOCB_STACK_DISPOSITION
		..11 1111		*
13	(D)	BITSTRING	3	*
16	(10)	SIGNED	4	CEEOCB_STACK_DSINIT_SIZE
20	(14)	SIGNED	4	CEEOCB_STACK_DSINCR_SIZE
0	(0)	STRUCTURE	12	CEEOCB_STORAGE_SUB_OPTS
0	(0)	BITSTRING	4	CEEOCB_STORAGE_SUB_OPTS_V
		1...		CEEOCB_STORAGE_HEAP_ALLOC_V
		.1..		CEEOCB_STORAGE_HEAP_FREE_V
		..1.		CEEOCB_STORAGE_DSA_ALLOC_V
		...1		CEEOCB_STORAGE_RESERVE_SIZE_V
1	(1)	BITSTRING	3	*
4	(4)	BITSTRING	1	CEEOCB_STORAGE_SUB_OPTS_FLAGS
		1...		CEEOCB_STORAGE_HEAP_ALLOC_SET
		.1..		CEEOCB_STORAGE_HEAP_FREE_SET
		..1.		CEEOCB_STORAGE_DSA_ALLOC_SET
		...1 1111		*
5	(5)	CHARACTER	1	CEEOCB_STORAGE_HEAP_ALLOC_VALUE
6	(6)	CHARACTER	1	CEEOCB_STORAGE_HEAP_FREE_VALUE
7	(7)	CHARACTER	1	CEEOCB_STORAGE_DSA_ALLOC_VALUE
8	(8)	SIGNED	4	CEEOCB_STORAGE_RESERVE_SIZE
0	(0)	STRUCTURE	12	CEEOCB_AUTOTASK_SUB_OPTS
0	(0)	BITSTRING	4	CEEOCB_AUTOTASK_SUB_OPTS_V
		1...		CEEOCB_AUTOTASK_LOADMOD_V
		.1..		CEEOCB_AUTOTASK_NTASKS_V
1	(1)	BITSTRING	3	*

Table 39. Options Control Block (OCB) Field Descriptions (continued)

Offsets		Type	Len	Name (Dim) (* = Reserved)
Dec	Hex			
4	(4)	PTR INTOAREA	4	CEEOCB_AUTOTASK_LOADMOD_O
8	(8)	SIGNED	4	CEEOCB_AUTOTASK_NTASKS
0	(0)	STRUCTURE	12	CEEOCB_AUTOTASK_LOADMOD_S
0	(0)	CHARACTER	10	CEEOCB_AUTOTASK_LOADMOD
0	(0)	SIGNED	2	CEEOCB_AUTOTASK_LOADMOD_LENGTH
2	(2)	CHARACTER	8	CEEOCB_AUTOTASK_LOADMOD_STRING
10	(A)	CHARACTER	2	*
0	(0)	STRUCTURE	20	CEEOCB_TEST_SUB_OPTS
0	(0)	BITSTRING	4	CEEOCB_TEST_SUB_OPTS_V
		1...		CEEOCB_TEST_CONTROL_V
		.1..		CEEOCB_TEST_COMMAND_FILE_V
		..1.		CEEOCB_TEST_INIT_COMMAND_V
		...1		CEEOCB_TEST_PREFERENCE_FILE_V
1	(1)	BITSTRING	3	*
4	(4)	SIGNED	4	CEEOCB_TEST_CONTROL
8	(8)	PTR INTOAREA	4	CEEOCB_TEST_COMMAND_FILE_O
12	(C)	PTR INTOAREA	4	CEEOCB_TEST_INIT_COMMAND_O
16	(10)	PTR INTOAREA	4	CEEOCB_TEST_PREFERENCE_FILE_O
0	(0)	STRUCTURE	84	CEEOCB_TEST_COMMAND_FILE_S
0	(0)	CHARACTER	82	CEEOCB_TEST_COMMAND_FILE
0	(0)	SIGNED	2	CEEOCB_TEST_COMMAND_FILE_LEN
2	(2)	CHARACTER	80	CEEOCB_TEST_COMMAND_FILE_STR
82	(52)	CHARACTER	2	*
0	(0)	STRUCTURE	252	CEEOCB_TEST_INIT_COMMAND_S
0	(0)	CHARACTER	250	CEEOCB_TEST_INIT_COMMAND
0	(0)	SIGNED	2	CEEOCB_TEST_INIT_COMMAND_LEN
2	(2)	CHARACTER	250	CEEOCB_TEST_INIT_COMMAND_STR
0	(0)	STRUCTURE	84	CEEOCB_TEST_PREFERENCE_FILE_S
0	(0)	CHARACTER	82	CEEOCB_TEST_PREFERENCE_FILE
0	(0)	SIGNED	2	CEEOCB_TEST_PREFERENCE_FILE_LEN
2	(2)	CHARACTER	80	CEEOCB_TEST_PREFERENCE_FILE_STR
82	(52)	CHARACTER	2	*
0	(0)	STRUCTURE	16	CEEOCB_THREADSTACK_SUB_OPTS
0	(0)	BITSTRING	4	CEEOCB_THREADSTACK_SUB_OPTS_V
		1...		CEEOCB_THREADSTACK_INIT_SIZE_V
		.1..		CEEOCB_THREADSTACK_INCR_SIZE_V
		..1.		CEEOCB_THREADSTACK_LOCATION_V

Table 39. Options Control Block (OCB) Field Descriptions (continued)

Offsets		Type	Len	Name (Dim) (* = Reserved)
Dec	Hex			
		...1		CEEOCB_THREADSTACK_DISPOSITN_V
1	(1)	BITSTRING	3	*
4	(4)	SIGNED	4	CEEOCB_THREADSTACK_INIT_SIZE
8	(8)	SIGNED	4	CEEOCB_THREADSTACK_INCR_SIZE
12	(C)	BITSTRING	1	CEEOCB_THREADSTACK_SUB_BIT_FLAG
		1...		CEEOCB_THREADSTACK_LOCATION
		.1..		CEEOCB_THREADSTACK_DISPOSITION
		..11 1111		*
13	(D)	BITSTRING	3	*
16	(10)	SIGNED	4	CEEOCB_THREADSTACK_DSINIT_SIZE
20	(14)	SIGNED	4	CEEOCB_THREADSTACK_DSINCR_SIZE
0	(0)	STRUCTURE		CEEOCB_TRACE_SUB_OPTS
0	(0)	BITSTRING	4	CEEOCB_TRACE_SUB_OPTS_V
		1...		CEEOCB_TRACE_TBL_SIZE_V
		.1..		CEEOCB_TRACE_GLOBAL_V
		..1.		CEEOCB_TRACE_DUMP_V
1	(1)	BITSTRING	3	*
4	(4)	SIGNED	4	CEEOCB_TRACE_TBL_SIZE
8	(8)	BITSTRING	4	CEEOCB_TRACE_GLOBAL
12	(C)	BITSTRING	4	CEEOCB_TRACE_FLAGS
		1...		CEEOCB_TRACE_DUMP
13	(D)	BITSTRING	3	*
16	(10)	PTR INTOAREA	4	CEEOCB_TRACE_LVL_V_O
20	(14)	PTR INTOAREA	4	CEEOCB_TRACE_LVL_S_O
24	(18)	PTR INTOAREA	4	CEEOCB_TRACE_LVL_O
0	(0)	STRUCTURE	4	CEEOCB_TRACE_LVL_V
0	(0)	BITSTRING	4	CEEOCB_TRACE_LVL_V_FLAGS Trace level verify array (must be kept in sync with the array below)
		1...		*
		.1..		CEEOCB_TRACE_CEL_V
		..1.		*
		...1		CEEOCB_TRACE_C370_V
		.... 1...		*
		.... .1..		CEEOCB_TRACE_COBOL_V
		.... ..1.		CEEOCB_TRACE_INSPECT_V

Table 39. Options Control Block (OCB) Field Descriptions (continued)

Offsets		Type	Len	Name (Dim) (* = Reserved)
Dec	Hex			
		1		CEEOCB_TRACE_FORTRAN_V
		1...		CEEOCB_TRACE_DCE_V
		.1..		*
		..1.		CEEOCB_TRACE_PLI_V
		...1		CEEOCB_TRACE_PLI2_V
		.... 1...		CEEOCB_TRACE_SOCKET_V
		.... .1..		*
		.... ..1.		CEEOCB_TRACE_SAS_V
		1		*
2	(2)	BITSTRING	2	*
0	(0)	STRUCTURE	4	CEEOCB_TRACE_LVL_S
0	(0)	BITSTRING	4	CEEOCB_TRACE_LVL_S_FLAGS Trace level modified from its default value, array (must be kept in sync with the array below)
		1...		*
		.1..		CEEOCB_TRACE_CEL_S
		..1.		*
		...1		CEEOCB_TRACE_C370_S
		.... 1...		*
		.... .1..		CEEOCB_TRACE_COBOL_S
		.... ..1.		CEEOCB_TRACE_INSPECT_S
		1		CEEOCB_TRACE_FORTRAN_S
		1...		CEEOCB_TRACE_DCE_S
		.1..		*
		..1.		CEEOCB_TRACE_PLI_S
		...1		CEEOCB_TRACE_PLI2_S
		.... 1...		CEEOCB_TRACE_SOCKET_S
		.... .1..		*
		.... ..1.		CEEOCB_TRACE_SAS_S
		1		*
2	(2)	BITSTRING	2	*
0	(0)	STRUCTURE	72	CEEOCB_TRACE_LVL

Table 39. Options Control Block (OCB) Field Descriptions (continued)

Offsets		Type	Len	Name (Dim) (* = Reserved)
Dec	Hex			
0	(0)	CHARACTER	72	CEEOCB_TRACE_LEVELS Trace levels array (must be kept in sync with the array above)
0	(0)	BITSTRING	4	*
4	(4)	BITSTRING	4	CEEOCB_TRACE_CEL
8	(8)	BITSTRING	4	*
12	(C)	BITSTRING	4	CEEOCB_TRACE_C370
16	(10)	BITSTRING	4	*
20	(14)	BITSTRING	4	CEEOCB_TRACE_COBOL
24	(18)	BITSTRING	4	CEEOCB_TRACE_INSPECT
28	(1C)	BITSTRING	4	CEEOCB_TRACE_FORTRAN
32	(20)	BITSTRING	4	CEEOCB_TRACE_DCE
36	(24)	BITSTRING	4	*
40	(28)	BITSTRING	4	CEEOCB_TRACE_PLI
44	(2C)	BITSTRING	4	CEEOCB_TRACE_PLI2
48	(30)	BITSTRING	4	CEEOCB_TRACE_SOCKET
52	(34)	BITSTRING	4	*
56	(38)	BITSTRING	4	CEEOCB_TRACE_SAS
60	(3C)	BITSTRING	4	*
64	(40)	BITSTRING	4	*
68	(44)	BITSTRING	4	*
0	(0)	STRUCTURE	12	CEEOCB_UPSI_SUB_OPTS
0	(0)	BITSTRING	4	CEEOCB_UPSI_SUB_OPTS_V
		1...		CEEOCB_UPSI_N_V
1	(1)	BITSTRING	3	*
4	(4)	CHARACTER	8	CEEOCB_UPSI_N
0	(0)	STRUCTURE	12	CEEOCB_USRHDLR_SUB_OPTS
0	(0)	BITSTRING	4	CEEOCB_USRHDLR_SUB_OPTS_V
		1...		CEEOCB_USRHDLR_ROUTINE_V
		.1..		CEEOCB_USRHDLR_SUPERHDLR_V
1	(1)	BITSTRING	3	*
4	(4)	PTR INTOAREA	4	CEEOCB_USRHDLR_ROUTINE_O
8	(8)	RTR INTOAREA	4	CEEOCB_USRHDLR_SUPERHDLR_O
0	(0)	STRUCTURE	12	CEEOCB_USRHDLR_ROUTINE_S
0	(0)	CHARACTER	8	CEEOCB_USRHDLR_ROUTINE
0	(0)	SIGNED	2	CEEOCB_USRHDLR_ROUTINE_LENGTH
2	(2)	CHARACTER	8	CEEOCB_USRHDLR_ROUTINE_STRING
10	(A)	CHARACTER	2	*

Table 39. Options Control Block (OCB) Field Descriptions (continued)

Offsets		Type	Len	Name (Dim) (* = Reserved)
Dec	Hex			
0	(0)	STRUCTURE	10	CEEOCB_USRHDLR_SUPERHDLR_S
0	(0)	SIGNED	2	CEEOCB_USRHDLR_SUPERHDLR_LENGTH
2	(2)	CHARACTER	8	CEEOCB_USRHDLR_SUPERHDLR_STRING
0	(0)	STRUCTURE	8	CEEOCB_NAMELIST_SUB_OPTS
0	(0)	BITSTRING	4	CEEOCB_NAMELIST_SUB_OPTS_V
		1...		CEEOCB_NAMELIST_LEVEL_V
1	(1)	BITSTRING	3	*
4	(4)	SIGNED	4	CEEOCB_NAMELIST_LEVEL
0	(0)	STRUCTURE	8	CEEOCB_XUFLOW_SUB_OPTS
0	(0)	BITSTRING	4	CEEOCB_XUFLOW_SUB_OPTS_V
		1...		CEEOCB_XUFLOW_LEVEL_V
1	(1)	BITSTRING	3	*
4	(4)	SIGNED	4	CEEOCB_XUFLOW_LEVEL
0	(0)	STRUCTURE	16	CEEOCB_ANYHEAP_SUB_OPTS
0	(0)	BITSTRING	4	CEEOCB_ANYHEAP_SUB_OPTS_V
		1...		CEEOCB_ANYHEAP_INIT_SIZE_V
		.1..		CEEOCB_ANYHEAP_INCR_SIZE_V
		..1.		CEEOCB_ANYHEAP_LOCATION_V
		...1		CEEOCB_ANYHEAP_DISPOSITION_V
1	(1)	BITSTRING	3	*
4	(4)	SIGNED	4	CEEOCB_ANYHEAP_INIT_SIZE
8	(8)	SIGNED	4	CEEOCB_ANYHEAP_INCR_SIZE
12	(C)	BITSTRING	1	CEEOCB_ANYHEAP_SUB_BIT_FLAG
		1...		CEEOCB_ANYHEAP_LOCATION
		.1..		CEEOCB_ANYHEAP_DISPOSITION
		..11 1111		*
13	(D)	BITSTRING	3	*
0	(0)	STRUCTURE	8	CEEOCB_MSGQ_SUB_OPTS
0	(0)	BITSTRING	4	CEEOCB_MSGQ_SUB_OPTS_V
		1...		CEEOCB_MSGQ_N_V
1	(1)	BITSTRING	3	*
4	(4)	SIGNED	4	CEEOCB_MSGQ_N
0	(0)	STRUCTURE	20	CEEOCB_ABPERC_SUB_OPTS
0	(0)	BITSTRING	4	CEEOCB_ABPERC_SUB_OPTS_V
		1...		CEEOCB_ABPERC_ABCODE_V
1	(1)	BITSTRING	3	*
4	(4)	BITSTRING	4	CEEOCB_ABPERC_SUB_OPTS_FLAGS

Table 39. Options Control Block (OCB) Field Descriptions (continued)

Offsets		Type	Len	Name (Dim) (* = Reserved)
Dec	Hex			
		1...		CEEOCB_ABPERC_NONE
		.1..		CEEOCB_ABPERC_USER
		..1.		CEEOCB_ABPERC_SYST
		...1		CEEOCB_ABPERC_OTHR
5	(5)	BITSTRING	3	*
8	(8)	SIGNED	4	CEEOCB_ABPERC_ABNUM
12	(C)	CHARACTER	8	CEEOCB_ABPERC_ABCODE
0	(0)	STRUCTURE	8	CEEOCB_TERMTHDACT_SUB_OPTS
0	(0)	BITSTRING	4	CEEOCB_TERMTHDACT_SUB_OPTS_V
		1...		CEEOCB_TERMTHDACT_LEVEL_V
		.1..		*
		..1.		CEEOCB_TERMTHDACT_REGSTOR_V
		...1		CEEOCB_TERMTHDACT_CICSDEST_V
1	(1)	BITSTRING	3	*
4	(4)	SIGNED	4	CEEOCB_TERMTHDACT_LEVEL
8	(8)	UNSIGNED	1	CEEOCB_TERMTHDACT_CICSDEST
9	(9)	BITSTRING	3	*
12	(0C)	UNSIGNED	2	CEEOCB_TERMTHDACT_REGSTOR
14	(0E)	BITSTRING	2	*
0	(0)	STRUCTURE	16	CEEOCB_THREADHEAP_SUB_OPTS
0	(0)	BITSTRING	4	CEEOCB_THREADHEAP_SUB_OPTS_V
		1...		CEEOCB_THREADHEAP_INIT_SIZE_V
		.1..		CEEOCB_THREADHEAP_INCR_SIZE_V
		..1.		CEEOCB_THREADHEAP_LOCATION_V
		...1		CEEOCB_THREADHEAP_DISPOSITION_V
1	(1)	BITSTRING	3	*
4	(4)	SIGNED	4	CEEOCB_THREADHEAP_INIT_SIZE
8	(8)	SIGNED	4	CEEOCB_THREADHEAP_INCR_SIZE
12	(C)	BITSTRING	1	CEEOCB_THREADHEAP_SUB_BIT_FLAG
		1...		CEEOCB_THREADHEAP_LOCATION
		.1..		CEEOCB_THREADHEAP_DISPOSITION
		..11 1111		*
13	(D)	BITSTRING	3	*
0	(0)	STRUCTURE	16	CEEOCB_NONIPTSTACK_SUB_OPTS
0	(0)	BITSTRING	4	CEEOCB_NONIPTSTACK_SUB_OPTS_V
		1...		CEEOCB_NONIPTSTACK_INIT_SIZE_V

Table 39. Options Control Block (OCB) Field Descriptions (continued)

Offsets		Type	Len	Name (Dim) (* = Reserved)
Dec	Hex			
		.1..		CEEOCB_NONIPTSTACK_INCR_SIZE_V
		..1.		CEEOCB_NONIPTSTACK_LOCATION_V
		...1		CEEOCB_NONIPTSTACK_DISPOSITION_V
1	(1)	BITSTRING	3	*
4	(4)	SIGNED	4	CEEOCB_NONIPTSTACK_INIT_SIZE
8	(8)	SIGNED	4	CEEOCB_NONIPTSTACK_INCR_SIZE
12	(C)	BITSTRING	1	CEEOCB_NONIPTSTACK_SUB_BIT_FLAG
		1...		CEEOCB_NONIPTSTACK_LOCATION
		.1..		CEEOCB_NONIPTSTACK_DISPOSITION
		..11 1111		*
13	(D)	BITSTRING	3	*
0	(0)	STRUCTURE	8	CEEOCB_PLITASKCOUNT_SUB_OPTS
0	(0)	BITSTRING	4	CEEOCB_PLITASKCOUNT_SUB_OPTS_V
		1...		CEEOCB_PLITASKCOUNT_TASKS_V
1	(1)	BITSTRING	3	*
4	(4)	SIGNED	4	CEEOCB_PLITASKCOUNT_TASKS
0	(0)	STRUCTURE	8	CEEOCB_LIBRARY_SUB_OPTS
0	(0)	BITSTRING	4	CEEOCB_LIBRARY_SUB_OPTS_V
		1...		CEEOCB_LIBRARY_NAME_V
1	(1)	BITSTRING	3	*
4	(4)	PTR INTOAREA	4	CEEOCB_LIBRARY_NAME_O
0	(0)	CHARACTER	12	CEEOCB_LIBRARY_NAME_S
0	(0)	CHARACTER	10	CEEOCB_LIBRARY_NAME
0	(0)	SIGNED	2	CEEOCB_LIBRARY_NAME_LENGTH
2	(2)	CHARACTER	8	CEEOCB_LIBRARY_NAME_STRING
10	(A)	CHARACTER	2	*
0	(0)	STRUCTURE	8	CEEOCB_VERSION_SUB_OPTS
0	(0)	BITSTRING	4	CEEOCB_VERSION_SUB_OPTS_V
		1...		CEEOCB_VERSION_NAME_V
1	(1)	BITSTRING	3	*
4	(4)	PTR INTOAREA	4	CEEOCB_VERSION_NAME_O
0	(0)	STRUCTURE	12	CEEOCB_VERSION_NAME_S
0	(0)	CHARACTER	10	CEEOCB_VERSION_NAME
0	(0)	SIGNED	2	CEEOCB_VERSION_NAME_LENGTH
2	(2)	CHARACTER	8	CEEOCB_VERSION_NAME_STRING
10	(A)	CHARACTER	2	*
0	(0)	STRUCTURE	12	CEEOCB_HEAPCHK_SUB_OPTS

Table 39. Options Control Block (OCB) Field Descriptions (continued)

Offsets		Type	Len	Name (Dim) (* = Reserved)
Dec	Hex			
0	(0)	BITSTRING	4	CEEOCB_HEAPCHK_SUB_OPTS_V
		1...		CEEOCB_HEAPCHK_FREQUENCY_V
		.1..		CEEOCB_HEAPCHK_DELAY_V
		..1.		CEEOCB_HEAPCHK_CALL_LEVEL_V
1	(1)	BITSTRING	3	*
4	(4)	SIGNED	4	CEEOCB_HEAPCHK_FREQUENCY
8	(8)	SIGNED	4	CEEOCB_HEAPCHK_DELAY
12	(C)	SIGNED	4	CEEOCB_HEAPCHK_CALL_LEVEL
0	(0)	STRUCTURE	8	CEEOCB_PROFILE_SUB_OPTS
0	(0)	BITSTRING	4	CEEOCB_PROFILE_SUB_OPTS_V
		1...		CEEOCB_PROFILE_STRING_V
1	(1)	BITSTRING	3	*
4	(4)	PTR INTOAREA	4	CEEOCB_PROFILE_STRING_O
0	(0)	STRUCTURE	252	CEEOCB_PROFILE_STRING_S
0	(0)	CHARACTER	252	CEEOCB_PROFILE_STRING
0	(0)	SIGNED	2	CEEOCB_PROFILE_STRING_LENGTH
2	(2)	CHARACTER	250	CEEOCB_PROFILE_STRING_STRING
0	(0)	STRUCTURE	100	CEEOCB_HEAPPOOLS_SUB_OPTS
0	(0)	BITSTRING	4	CEEOCB_HEAPPOOLS_SUB_OPTS_V
		1...		CEEOCB_HEAPPOOLS_POOL1_SIZE_V
		.1..		CEEOCB_HEAPPOOLS_POOL1_PRCNT_V
		..1.		CEEOCB_HEAPPOOLS_POOL2_SIZE_V
		...1		CEEOCB_HEAPPOOLS_POOL2_PRCNT_V
		.... 1...		CEEOCB_HEAPPOOLS_POOL3_SIZE_V
		.... .1..		CEEOCB_HEAPPOOLS_POOL3_PRCNT_V
		.... ..1.		CEEOCB_HEAPPOOLS_POOL4_SIZE_V
		1		CEEOCB_HEAPPOOLS_POOL4_PRCNT_V
		1...		CEEOCB_HEAPPOOLS_POOL5_SIZE_V
		.1..		CEEOCB_HEAPPOOLS_POOL5_PRCNT_V
		..1.		CEEOCB_HEAPPOOLS_POOL6_SIZE_V
		...1		CEEOCB_HEAPPOOLS_POOL6_PRCNT_V
2	(2)	BITSTRING	2	*
4	(4)	SIGNED	4	CEEOCB_HEAPPOOLS_POOL1_SIZE
8	(8)	SIGNED	4	CEEOCB_HEAPPOOLS_POOL1_PRCNT
12	(C)	SIGNED	4	CEEOCB_HEAPPOOLS_POOL2_SIZE
16	(10)	SIGNED	4	CEEOCB_HEAPPOOLS_POOL2_PRCNT

Table 39. Options Control Block (OCB) Field Descriptions (continued)

Offsets		Type	Len	Name (Dim) (* = Reserved)
Dec	Hex			
20	(14)	SIGNED	4	CEEOCB_HEAPPOOLS_POOL3_SIZE
24	(18)	SIGNED	4	CEEOCB_HEAPPOOLS_POOL3_PRCNT
28	(1C)	SIGNED	4	CEEOCB_HEAPPOOLS_POOL4_SIZE
32	(20)	SIGNED	4	CEEOCB_HEAPPOOLS_POOL4_PRCNT
36	(24)	SIGNED	4	CEEOCB_HEAPPOOLS_POOL5_SIZE
40	(28)	SIGNED	4	CEEOCB_HEAPPOOLS_POOL5_PRCNT
44	(2C)	SIGNED	4	CEEOCB_HEAPPOOLS_POOL6_SIZE
48	(30)	SIGNED	4	CEEOCB_HEAPPOOLS_POOL6_PRCNT
52	(34)	CHARACTER	48	*
0	(0)	STRUCTURE	8	CEEOCB_INFOMSGFILTER_SUB_OPTS
0	(0)	BITSTRING	4	CEEOCB_INFOMSGFILTER_SUB_OPTS_V
		1...		CEEOCB_INFOMSGFILTER_ENV1 _V
		.1..		CEEOCB_INFOMSGFILTER_ENV2 _V
		..1.		CEEOCB_INFOMSGFILTER_ENV3 _V
		...1		CEEOCB_INFOMSGFILTER_ENV4 _V
1	(1)	BITSTRING	3	*
4	(4)	CHARACTER	1	CEEOCB_INFOMSGFILTER_ENV1
5	(5)	CHARACTER	1	CEEOCB_INFOMSGFILTER_ENV2
6	(6)	CHARACTER	1	CEEOCB_INFOMSGFILTER_ENV3
7	(7)	CHARACTER	1	CEEOCB_INFOMSGFILTER_ENV4
0	(0)	STRUCTURE	8	CEEOCB_TRAP_SUB_OPTS
0	(0)	BITSTRING	4	CEEOCB_TRAP_SUB_OPTS_V
		1...		CEEOCB_TRAP_SPIE_V
4	(4)	BITSTRING	4	CEEOCB_TRAP_FLAGS
		1...		CEEOCB_TRAP_SPIE
5	(5)	BITSTRING	3	*
0	(0)	STRUCTURE	8	CEEOCB_FILETAG_SUB_OPTS
0	(0)	BITSTRING	1	CEEOCB_FILETAG_SUB_OPTS_V
		1...		CEEOCB_FILETAG_AUTOCVT_V
		.1..		CEEOCB_FILETAG_AUTOTAG_V
		..11 1111		*
1	(1)	BITSTRING	3	*
4	(4)	BITSTRING	1	CEEOCB_FILETAG_FLAGS
		1...		CEEOCB_FILETAG_AUTOCVT
		.1..		CEEOCB_FILETAG_AUTOTAG
		..11 1111		*

Table 39. Options Control Block (OCB) Field Descriptions (continued)

Offsets		Type	Len	Name (Dim) (* = Reserved)
Dec	Hex			
1	(1)	BITSTRING	3	*
0	(0)	STRUCTURE	8	CEEOCB_EXPANSION_VECTOR
0	(0)	PTR INTOAREA	4	CEEOCB_BATCH_ROUNDED_PTR
4	(4)	PTR INTOAREA	4	CEEOCB_CICS_ROUNDED_PTR
0	(0)	STRUCTURE	52	CEEOCB_ROUNDED_VALUES
0	(0)	SIGNED	4	CEEOCB_BELOWHEAP_INIT_SIZE_RND
4	(4)	SIGNED	4	CEEOCB_BELOWHEAP_INCR_SIZE_RND
8	(8)	SIGNED	4	CEEOCB_ANYHEAP_INIT_SIZE_RND
12	(C)	SIGNED	4	CEEOCB_ANYHEAP_INCR_SIZE_RND
16	(10)	SIGNED	4	CEEOCB_HEAP_INIT_SIZE_RND
20	(14)	SIGNED	4	CEEOCB_HEAP_INCR_SIZE_RND
24	(18)	SIGNED	4	CEEOCB_HEAP_INITSZ24_RND
28	(1C)	SIGNED	4	CEEOCB_HEAP_INCRSZ24_RND
32	(20)	SIGNED	4	CEEOCB_LIBSTACK_INIT_SIZE_RND
36	(24)	SIGNED	4	CEEOCB_LIBSTACK_INCR_SIZE_RND
40	(28)	SIGNED	4	CEEOCB_STACK_INIT_SIZE_RND
44	(2C)	SIGNED	4	CEEOCB_STACK_INCR_SIZE_RND
48	(30)	SIGNED	4	CEEOCB_STORAGE_RESERVE_SIZE_RND

Table 40. Options Control Block (OCB) Constants

Len	Type	Value	Name	Description
4	DECIMAL	2216	OPTIONS_CONTROL_BLOCK_LENGTH	
0	BIT	0	KEEP	
0	BIT	1	FREE	
0	BIT	0	ANYWHERE	
0	BIT	1	BELOW	
4	DECIMAL	1	RET_EXIT	
4	DECIMAL	2	ABD_EXIT	
2	DECIMAL	1	NONE_CONDITION	test/notest
2	DECIMAL	2	ERROR_CONDITION	
2	DECIMAL	4	ALL_CONDITION	
2	DECIMAL	1	DUMP_CONDITION	termthdact
2	DECIMAL	2	TRACE_CONDITION	
2	DECIMAL	4	MSG_CONDITION	
2	DECIMAL	8	QUIET_CONDITION	
2	DECIMAL	16	UADUMP_CONDITION	
2	DECIMAL	32	UAONLY_CONDITION	
2	DECIMAL	64	UAIMM_CONDITION	
2	DECIMAL	128	UATRACE_CONDITION	

Table 40. Options Control Block (OCB) Constants (continued)

Len	Type	Value	Name	Description
2	DECIMAL	1	OLD_NAMELIST	namelist
2	DECIMAL	2	F90_NAMELIST	
2	DECIMAL	1	VAR_RECPAD	recpad
2	DECIMAL	2	ON_RECPAD	
2	DECIMAL	2	ALL_RECPAD	
2	DECIMAL	4	OFF_RECPAD	
2	DECIMAL	4	NONE_RECPAD	
2	DECIMAL	1	AUTO_XUFLOW	xuflow
2	DECIMAL	2	ON_XUFLOW	
2	DECIMAL	4	OFF_XUFLOW	
2	DECIMAL	50	DEFAULT_SETTING	
2	DECIMAL	100	INSTALLATION_DEFAULTS	
2	DECIMAL	200	PROGRAMMER_DEFAULTS	
2	DECIMAL	300	ASSEMBLER_USER_EXIT	
2	DECIMAL	400	PROGRAM_INVOCATION	
2	DECIMAL	500	REGION_DEFAULTS	
2	DECIMAL	600	STGTUNE_USER_EXIT	
2	DECIMAL	700	OVER_RIDE	
2	DECIMAL	800	CICS_SYSTEM_ADMIN	

Table 41. Options Control Block (OCB) Cross Reference

Name	Hex Offset	Hex Value	Description
CEEOCB	0		
CEEOCB_ABPERC	164		
CEEOCB_ABPERC_ABCODE	C		
CEEOCB_ABPERC_ABCODE_V	0	80	
CEEOCB_ABPERC_ABNUM	8		
CEEOCB_ABPERC_BIT_FLAG	164		
CEEOCB_ABPERC_NONE	4	80	
CEEOCB_ABPERC_NOOVERRIDE	164	40	
CEEOCB_ABPERC_ON	164	80	
CEEOCB_ABPERC_ON_V	164	01	
CEEOCB_ABPERC_OTHR	4	10	
CEEOCB_ABPERC_SUB_OPTIONS	168		
CEEOCB_ABPERC_SUB_OPTS	0		
CEEOCB_ABPERC_SUB_OPTS_FLAGS	4		
CEEOCB_ABPERC_SUB_OPTS_V	0		
CEEOCB_ABPERC_SYST	4	20	
CEEOCB_ABPERC_USER	4	40	

Table 41. Options Control Block (OCB) Cross Reference (continued)

Name	Hex Offset	Hex Value	Description
CEEOCB_ABPERC_WHERE_SET	166		
CEEOCB_ABTERMENC	44		
CEEOCB_ABTERMENC_BIT_FLAG	44		
CEEOCB_ABTERMENC_EXITMODE	4		
CEEOCB_ABTERMENC_EXITMODE_V	0	80	
CEEOCB_ABTERMENC_NOOVERRIDE	44	40	
CEEOCB_ABTERMENC_ON	44	80	
CEEOCB_ABTERMENC_ON_V	44	01	
CEEOCB_ABTERMENC_SUB_OPTIONS	48		
CEEOCB_ABTERMENC_SUB_OPTS	0		
CEEOCB_ABTERMENC_SUB_OPTS_V	0		
CEEOCB_ABTERMENC_WHERE_SET	46		
CEEOCB_AIXBLD	1C		
CEEOCB_AIXBLD_BIT_FLAG	1C		
CEEOCB_AIXBLD_NOOVERRIDE	1C	40	
CEEOCB_AIXBLD_ON	1C	80	
CEEOCB_AIXBLD_ON_V	1C	01	
CEEOCB_AIXBLD_SUB_OPTIONS	20		
CEEOCB_AIXBLD_WHERE_SET	1E		
CEEOCB_ALL31	24		
CEEOCB_ALL31_BIT_FLAG	24		
CEEOCB_ALL31_NOOVERRIDE	24	40	
CEEOCB_ALL31_ON	24	80	
CEEOCB_ALL31_ON_V	24	01	
CEEOCB_ALL31_SUB_OPTIONS	28		
CEEOCB_ALL31_WHERE_SET	26		
CEEOCB_ANYHEAP	15C		
CEEOCB_ANYHEAP_BIT_FLAG	15C		
CEEOCB_ANYHEAP_DISPOSITION	C	40	
CEEOCB_ANYHEAP_DISPOSITION_V	0	10	
CEEOCB_ANYHEAP_INCR_SIZE	8		
CEEOCB_ANYHEAP_INCR_SIZE_RND	C		
CEEOCB_ANYHEAP_INCR_SIZE_V	0	40	
CEEOCB_ANYHEAP_INIT_SIZE	4		
CEEOCB_ANYHEAP_INIT_SIZE_RND	8		
CEEOCB_ANYHEAP_INIT_SIZE_V	0	80	
CEEOCB_ANYHEAP_LOCATION	C	80	

Table 41. Options Control Block (OCB) Cross Reference (continued)

Name	Hex Offset	Hex Value	Description
CEEOCB_ANYHEAP_LOCATION_V	0	20	
CEEOCB_ANYHEAP_NOOVERRIDE	15C	40	
CEEOCB_ANYHEAP_ON	15C	80	
CEEOCB_ANYHEAP_ON_V	15C	01	
CEEOCB_ANYHEAP_SUB_BIT_FLAG	C		
CEEOCB_ANYHEAP_SUB_OPTIONS	160		
CEEOCB_ANYHEAP_SUB_OPTS	0		
CEEOCB_ANYHEAP_SUB_OPTS_V	0		
CEEOCB_ANYHEAP_WHERE_SET	15E		
CEEOCB_AUTOTASK	F4		
CEEOCB_AUTOTASK_BIT_FLAG	F4		
CEEOCB_AUTOTASK_LOADMOD	0		
CEEOCB_AUTOTASK_LOADMOD_LENGTH	0		
CEEOCB_AUTOTASK_LOADMOD_O	4		
CEEOCB_AUTOTASK_LOADMOD_S	0		
CEEOCB_AUTOTASK_LOADMOD_STRING	2		
CEEOCB_AUTOTASK_LOADMOD_V	0	80	
CEEOCB_AUTOTASK_NOOVERRIDE	F4	40	
CEEOCB_AUTOTASK_NTASKS	8		
CEEOCB_AUTOTASK_NTASKS_V	0	40	
CEEOCB_AUTOTASK_ON	F4	80	
CEEOCB_AUTOTASK_ON_V	F4	01	
CEEOCB_AUTOTASK_SUB_OPTIONS	F8		
CEEOCB_AUTOTASK_SUB_OPTS	0		
CEEOCB_AUTOTASK_SUB_OPTS_V	0		
CEEOCB_AUTOTASK_WHERE_SET	F6		
CEEOCB_BATCH_ROUNDED_PTR	0		
CEEOCB_BELOWHEAP	2C		
CEEOCB_BELOWHEAP_BIT_FLAG	2C		
CEEOCB_BELOWHEAP_DISPOSITION	C	40	
CEEOCB_BELOWHEAP_DISPOSITION_V	0	20	
CEEOCB_BELOWHEAP_INCR_SIZE	8		
CEEOCB_BELOWHEAP_INCR_SIZE_RND	4		
CEEOCB_BELOWHEAP_INCR_SIZE_V	0	40	
CEEOCB_BELOWHEAP_INIT_SIZE	4		
CEEOCB_BELOWHEAP_INIT_SIZE_RND	0		
CEEOCB_BELOWHEAP_INIT_SIZE_V	0	80	

Table 41. Options Control Block (OCB) Cross Reference (continued)

Name	Hex Offset	Hex Value	Description
CEEOCB_BELOWHEAP_LOCATION	C	80	
CEEOCB_BELOWHEAP_NOOVERRIDE	2C	40	
CEEOCB_BELOWHEAP_ON	2C	80	
CEEOCB_BELOWHEAP_ON_V	2C	01	
CEEOCB_BELOWHEAP_SUB_BIT_FLAG	C		
CEEOCB_BELOWHEAP_SUB_OPTIONS	30		
CEEOCB_BELOWHEAP_SUB_OPTS	0		
CEEOCB_BELOWHEAP_SUB_OPTS_V	0		
CEEOCB_BELOWHEAP_WHERE_SET	2E		
CEEOCB_CBLOPTS	144		
CEEOCB_CBLOPTS_BIT_FLAG	144		
CEEOCB_CBLOPTS_NOOVERRIDE	144	40	
CEEOCB_CBLOPTS_ON	144	80	
CEEOCB_CBLOPTS_ON_V	144	01	
CEEOCB_CBLOPTS_SUB_OPTIONS	148		
CEEOCB_CBLOPTS_WHERE_SET	146		
CEEOCB_CBLPSHPOP	17C		
CEEOCB_CBLPSHPOP_BIT_FLAG	17C		
CEEOCB_CBLPSHPOP_NOOVERRIDE	17C	40	
CEEOCB_CBLPSHPOP_ON	17C	80	
CEEOCB_CBLPSHPOP_ON_V	17C	01	
CEEOCB_CBLPSHPOP_SUB_OPTIONS	180		
CEEOCB_CBLPSHPOP_WHERE_SET	17E		
CEEOCB_CBLQDA	184		
CEEOCB_CBLQDA_BIT_FLAG	184		
CEEOCB_CBLQDA_NOOVERRIDE	184	40	
CEEOCB_CBLQDA_ON	184	80	
CEEOCB_CBLQDA_ON_V	184	01	
CEEOCB_CBLQDA_SUB_OPTIONS	188		
CEEOCB_CBLQDA_WHERE_SET	186		
CEEOCB_CHECK	34		
CEEOCB_CHECK_BIT_FLAG	34		
CEEOCB_CHECK_NOOVERRIDE	34	40	
CEEOCB_CHECK_ON	34	80	
CEEOCB_CHECK_ON_V	34	01	
CEEOCB_CHECK_SUB_OPTIONS	38		
CEEOCB_CHECK_WHERE_SET	36		

Table 41. Options Control Block (OCB) Cross Reference (continued)

Name	Hex Offset	Hex Value	Description
CEEOCB_CICS_ROUNDED_PTR	4		
CEEOCB_COUNTRY	4C		
CEEOCB_COUNTRY_BIT_FLAG	4C		
CEEOCB_COUNTRY_CODE	4		
CEEOCB_COUNTRY_CODE_V	0	80	
CEEOCB_COUNTRY_NOOVERRIDE	4C	40	
CEEOCB_COUNTRY_ON	4C	80	
CEEOCB_COUNTRY_ON_V	4C	01	
CEEOCB_COUNTRY_SUB_OPTIONS	50		
CEEOCB_COUNTRY_SUB_OPTS	0		
CEEOCB_COUNTRY_SUB_OPTS_V	0		
CEEOCB_COUNTRY_WHERE_SET	4E		
CEEOCB_DEBUG	54		
CEEOCB_DEBUG_BIT_FLAG	54		
CEEOCB_DEBUG_NOOVERRIDE	54	40	
CEEOCB_DEBUG_ON	54	80	
CEEOCB_DEBUG_ON_V	54	01	
CEEOCB_DEBUG_SUB_OPTIONS	58		
CEEOCB_DEBUG_WHERE_SET	56		
CEEOCB_DEPTHCONDLMT	174		
CEEOCB_DEPTHCONDLMT_BIT_FLAG	174		
CEEOCB_DEPTHCONDLMT_N	4		
CEEOCB_DEPTHCONDLMT_N_V	0	80	
CEEOCB_DEPTHCONDLMT_NOOVERRIDE	174	40	
CEEOCB_DEPTHCONDLMT_ON	174	80	
CEEOCB_DEPTHCONDLMT_ON_V	174	01	
CEEOCB_DEPTHCONDLMT_SUB_OPTIONS	178		
CEEOCB_DEPTHCONDLMT_SUB_OPTS	0		
CEEOCB_DEPTHCONDLMT_SUB_OPTS_V	0		
CEEOCB_DEPTHCONDLMT_WHERE_SET	176		
CEEOCB_ENVAR	6C		
CEEOCB_ENVAR_BIT_FLAG	6C		
CEEOCB_ENVAR_NOOVERRIDE	6C	40	
CEEOCB_ENVAR_ON	6C	80	
CEEOCB_ENVAR_ON_V	6C	01	
CEEOCB_ENVAR_STRING	0		
CEEOCB_ENVAR_STRING_LENGTH	0		

Table 41. Options Control Block (OCB) Cross Reference (continued)

Name	Hex Offset	Hex Value	Description
CEEOCB_ENVAR_STRING_O	4		
CEEOCB_ENVAR_STRING_S	0		
CEEOCB_ENVAR_STRING_STRING	2		
CEEOCB_ENVAR_STRING_V	0	80	
CEEOCB_ENVAR_SUB_OPTIONS	70		
CEEOCB_ENVAR_SUB_OPTS	0		
CEEOCB_ENVAR_SUB_OPTS_V	0		
CEEOCB_ENVAR_WHERE_SET	6E		
CEEOCB_ERRCOUNT	5C		
CEEOCB_ERRCOUNT_BIT_FLAG	5C		
CEEOCB_ERRCOUNT_N	4		
CEEOCB_ERRCOUNT_N_V	0	80	
CEEOCB_ERRCOUNT_NOOVERRIDE	5C	40	
CEEOCB_ERRCOUNT_ON	5C	80	
CEEOCB_ERRCOUNT_ON_V	5C	01	
CEEOCB_ERRCOUNT_SUB_OPTIONS	60		
CEEOCB_ERRCOUNT_SUB_OPTS	0		
CEEOCB_ERRCOUNT_SUB_OPTS_V	0		
CEEOCB_ERRCOUNT_WHERE_SET	5E		
CEEOCB_ERRUNIT	B4		
CEEOCB_ERRUNIT_BIT_FLAG	B4		
CEEOCB_ERRUNIT_N	4		
CEEOCB_ERRUNIT_N_V	0	80	
CEEOCB_ERRUNIT_NOOVERRIDE	B4	40	
CEEOCB_ERRUNIT_ON	B4	80	
CEEOCB_ERRUNIT_ON_V	B4	01	
CEEOCB_ERRUNIT_SUB_OPTIONS	B8		
CEEOCB_ERRUNIT_SUB_OPTS	0		
CEEOCB_ERRUNIT_SUB_OPTS_V	0		
CEEOCB_ERRUNIT_WHERE_SET	B6		
CEEOCB_EV_PTR	C		
CEEOCB_EXPANSION_VECTOR	0		
CEEOCB_EYECATCHER	0		
CEEOCB_FILEHIST	64		
CEEOCB_FILEHIST_BIT_FLAG	64		
CEEOCB_FILEHIST_NOOVERRIDE	64	40	
CEEOCB_FILEHIST_ON	64	80	

Table 41. Options Control Block (OCB) Cross Reference (continued)

Name	Hex Offset	Hex Value	Description
CEEOCB_FILEHIST_ON_V	64	01	
CEEOCB_FILEHIST_SUB_OPTIONS	68		
CEEOCB_FILEHIST_WHERE_SET	66		
CEEOCB_FILETAG	1FC		
CEEOCB_FILETAG_BIT_FLAG	1FC		
CEEOCB_FILETAG_NOOVERRIDE	0	40	
CEEOCB_FILETAG_ON	0	80	
CEEOCB_FILETAG_ON_V	0	01	
CEEOCB_FILETAG_SUB_OPTIONS	200		
CEEOCB_FILETAG_WHERE_SET	1FE		
CEEOCB_FLOWC	74		
CEEOCB_FLOWC_BIT_FLAG	74		
CEEOCB_FLOWC_MAX_PROCEDURES	4		
CEEOCB_FLOWC_MAX_PROCEDURES_V	0	80	
CEEOCB_FLOWC_NOOVERRIDE	74	40	
CEEOCB_FLOWC_ON	74	80	
CEEOCB_FLOWC_ON_V	74	01	
CEEOCB_FLOWC_SUB_OPTIONS	78		
CEEOCB_FLOWC_SUB_OPTS	0		
CEEOCB_FLOWC_SUB_OPTS_V	0		
CEEOCB_FLOWC_WHERE_SET	76		
CEEOCB_HEAP	7C		
CEEOCB_HEAP_BIT_FLAG	7C		
CEEOCB_HEAP_DISPOSITION	C	40	
CEEOCB_HEAP_DISPOSITION_V	0	10	
CEEOCB_HEAP_INCR_SIZE	8		
CEEOCB_HEAP_INCR_SIZE_RND	14		
CEEOCB_HEAP_INCR_SIZE_V	0	40	
CEEOCB_HEAP_INCRSZ24	14		
CEEOCB_HEAP_INCRSZ24_RND	1C		
CEEOCB_HEAP_INCRSZ24_V	0	04	
CEEOCB_HEAP_INIT_SIZE	4		
CEEOCB_HEAP_INIT_SIZE_RND	10		
CEEOCB_HEAP_INIT_SIZE_V	0	80	
CEEOCB_HEAP_INITSZ24	10		
CEEOCB_HEAP_INITSZ24_RND	18		
CEEOCB_HEAP_INITSZ24_V	0	08	

Table 41. Options Control Block (OCB) Cross Reference (continued)

Name	Hex Offset	Hex Value	Description
CEEOCB_HEAP_LOCATION	C	80	
CEEOCB_HEAP_LOCATION_V	0	20	
CEEOCB_HEAP_NOOVERRIDE	7C	40	
CEEOCB_HEAP_ON	7C	80	
CEEOCB_HEAP_ON_V	7C	01	
CEEOCB_HEAP_SUB_BIT_FLAG	C		
CEEOCB_HEAP_SUB_OPTIONS	80		
CEEOCB_HEAP_SUB_OPTS	0		
CEEOCB_HEAP_SUB_OPTS_V	0		
CEEOCB_HEAP_WHERE_SET	7E		
CEEOCB_HEAPCHK	1D4		
CEEOCB_HEAPCHK_BIT_FLAG	1D4		
CEEOCB_HEAPCHK_CALL_LEVEL	0		
CEEOCB_HEAPCHK_CALL_LEVEL_V	0	20	
CEEOCB_HEAPCHK_DELAY	0		
CEEOCB_HEAPCHK_DELAY_V	0	40	
CEEOCB_HEAPCHK_FREQUENCY	0		
CEEOCB_HEAPCHK_FREQUENCY_V	0	80	
CEEOCB_HEAPCHK_NOOVERRIDE	1D4	40	
CEEOCB_HEAPCHK_ON	1D4	80	
CEEOCB_HEAPCHK_ON_V	1D4	01	
CEEOCB_HEAPCHK_SUB_OPTIONS	1D8		
CEEOCB_HEAPCHK_SUB_OPTS	0		
CEEOCB_HEAPCHK_SUB_OPTS_V	0		
CEEOCB_HEAPCHK_WHERE_SET	1D6		
CEEOCB_HEAPPOOLS	1E4		
CEEOCB_HEAPPOOLS_BIT_FLAG	1E4		
CEEOCB_HEAPPOOLS_NOOVERRIDE	1E4	40	
CEEOCB_HEAPPOOLS_ON	1E4	80	
CEEOCB_HEAPPOOLS_ON_V	1E4	01	
CEEOCB_HEAPPOOLS_SUB_OPTS	0		
CEEOCB_HEAPPOOLS_SUB_OPTS_V	0		
CEEOCB_HEAPPOOLS_POOL1_PRCNT	0		
CEEOCB_HEAPPOOLS_POOL1_PRCNT_V	0	40	
CEEOCB_HEAPPOOLS_POOL1_SIZE	0		
CEEOCB_HEAPPOOLS_POOL1_SIZE_V	0	80	
CEEOCB_HEAPPOOLS_POOL2_PRCNT	0		

Table 41. Options Control Block (OCB) Cross Reference (continued)

Name	Hex Offset	Hex Value	Description
CEEOCB_HEAPPOOLS_POOL2_PRCNT_V	0	10	
CEEOCB_HEAPPOOLS_POOL2_SIZE	0		
CEEOCB_HEAPPOOLS_POOL2_SIZE_V	0	20	
CEEOCB_HEAPPOOLS_POOL3_PRCNT	0		
CEEOCB_HEAPPOOLS_POOL3_PRCNT_V	0	04	
CEEOCB_HEAPPOOLS_POOL3_SIZE	0		
CEEOCB_HEAPPOOLS_POOL3_SIZE_V	0	08	
CEEOCB_HEAPPOOLS_POOL4_PRCNT	0		
CEEOCB_HEAPPOOLS_POOL4_PRCNT_V	0	01	
CEEOCB_HEAPPOOLS_POOL4_SIZE	0		
CEEOCB_HEAPPOOLS_POOL4_SIZE_V	0	02	
CEEOCB_HEAPPOOLS_POOL5_PRCNT	0		
CEEOCB_HEAPPOOLS_POOL5_PRCNT_V	0	40	
CEEOCB_HEAPPOOLS_POOL5_SIZE	0		
CEEOCB_HEAPPOOLS_POOL5_SIZE_V	0	80	
CEEOCB_HEAPPOOLS_POOL6_PRCNT	0		
CEEOCB_HEAPPOOLS_POOL6_PRCNT_V	0	10	
CEEOCB_HEAPPOOLS_POOL6_SIZE	0		
CEEOCB_HEAPPOOLS_POOL6_SIZE_V	0	20	
CEEOCB_HEAPPOOLS_SUB_OPTIONS	1E8		
CEEOCB_HEAPPOOLS_WHERE_SET	1E6		
CEEOCB_INFOMSGFILTER	1EC		
CEEOCB_INFOMSGFILTER_BIT_FLAG	1EC		
CEEOCB_INFOMSGFILTER_ON	1EC	80	
CEEOCB_INFOMSGFILTER_NOOVERRIDE	1EC	40	
CEEOCB_INFOMSGFILTER_ON_V	1EC	01	
CEEOCB_INFOMSGFILTER_WHERE_SET	1EE		
CEEOCB_INFOMSGFILTER_SUB_OPTIONS	1F0		
CEEOCB_INFOMSGFILTER_SUB_OPTS	0		
CEEOCB_INFOMSGFILTER_SUB_OPTS_V	0		
CEEOCB_INFOMSGFILTER_ENV1	4		
CEEOCB_INFOMSGFILTER_ENV1_V	0	80	
CEEOCB_INFOMSGFILTER_ENV2	5		
CEEOCB_INFOMSGFILTER_ENV2_V	0	40	
CEEOCB_INFOMSGFILTER_ENV3	6		
CEEOCB_INFOMSGFILTER_ENV3_V	0	20	
CEEOCB_INFOMSGFILTER_ENV4	7		

Table 41. Options Control Block (OCB) Cross Reference (continued)

Name	Hex Offset	Hex Value	Description
CEEOCB_INFOMSGFILTER_ENV4_V	0	10	
CEEOCB_INQPCOPN	84		
CEEOCB_INQPCOPN_BIT_FLAG	84		
CEEOCB_INQPCOPN_NOOVERRIDE	84	40	
CEEOCB_INQPCOPN_ON	84	80	
CEEOCB_INQPCOPN_ON_V	84	01	
CEEOCB_INQPCOPN_SUB_OPTIONS	88		
CEEOCB_INQPCOPN_WHERE_SET	86		
CEEOCB_INTERRUPT	8C		
CEEOCB_INTERRUPT_BIT_FLAG	8C		
CEEOCB_INTERRUPT_NOOVERRIDE	8C	40	
CEEOCB_INTERRUPT_ON	8C	80	
CEEOCB_INTERRUPT_ON_V	8C	01	
CEEOCB_INTERRUPT_SUB_OPTIONS	90		
CEEOCB_INTERRUPT_WHERE_SET	8E		
CEEOCB_LENGTH	A		
CEEOCB_LIBRARY	1BC		
CEEOCB_LIBRARY_BIT_FLAG	1BC		
CEEOCB_LIBRARY_NAME	0		
CEEOCB_LIBRARY_NAME_LENGTH	0		
CEEOCB_LIBRARY_NAME_O	0		
CEEOCB_LIBRARY_NAME_S	0		
CEEOCB_LIBRARY_NAME_STRING	2		
CEEOCB_LIBRARY_NAME_V	0	80	
CEEOCB_LIBRARY_NOOVERRIDE	1BC	40	
CEEOCB_LIBRARY_ON	1BC	80	
CEEOCB_LIBRARY_ON_V	1BC	01	
CEEOCB_LIBRARY_SUB_OPTIONS	1C0		
CEEOCB_LIBRARY_SUB_OPTS	0		
CEEOCB_LIBRARY_SUB_OPTS_V	0		
CEEOCB_LIBRARY_WHERE_SET	1BE		
CEEOCB_LIBSTACK	94		
CEEOCB_LIBSTACK_BIT_FLAG	94		
CEEOCB_LIBSTACK_DISPOSITION	C	40	
CEEOCB_LIBSTACK_DISPOSITION_V	0	20	
CEEOCB_LIBSTACK_INCR_SIZE	8		
CEEOCB_LIBSTACK_INCR_SIZE_RND	24		

Table 41. Options Control Block (OCB) Cross Reference (continued)

Name	Hex Offset	Hex Value	Description
CEEOCB_LIBSTACK_INCR_SIZE_V	0	40	
CEEOCB_LIBSTACK_INIT_SIZE	4		
CEEOCB_LIBSTACK_INIT_SIZE_RND	20		
CEEOCB_LIBSTACK_INIT_SIZE_V	0	80	
CEEOCB_LIBSTACK_LOCATION	C	80	
CEEOCB_LIBSTACK_NOOVERRIDE	94	40	
CEEOCB_LIBSTACK_ON	94	80	
CEEOCB_LIBSTACK_ON_V	94	01	
CEEOCB_LIBSTACK_SUB_BIT_FLAG	C		
CEEOCB_LIBSTACK_SUB_OPTIONS	98		
CEEOCB_LIBSTACK_SUB_OPTS	0		
CEEOCB_LIBSTACK_SUB_OPTS_V	0		
CEEOCB_LIBSTACK_WHERE_SET	96		
CEEOCB_MSGFILE	A4		
CEEOCB_MSGFILE_BIT_FLAG	A4		
CEEOCB_MSGFILE_BLKSIZE	10		
CEEOCB_MSGFILE_BLKSIZE_V	0	10	
CEEOCB_MSGFILE_DDNAME	0		
CEEOCB_MSGFILE_DDNAME_ENQ	B		
CEEOCB_MSGFILE_DDNAME_ENQ_V	0	8	
CEEOCB_MSGFILE_DDNAME_LENGTH	0		
CEEOCB_MSGFILE_DDNAME_O	4		
CEEOCB_MSGFILE_DDNAME_S	0		
CEEOCB_MSGFILE_DDNAME_STRING	2		
CEEOCB_MSGFILE_DDNAME_V	0	80	
CEEOCB_MSGFILE_LRECL	C		
CEEOCB_MSGFILE_LRECL_V	0	20	
CEEOCB_MSGFILE_NOOVERRIDE	A4	40	
CEEOCB_MSGFILE_ON	A4	80	
CEEOCB_MSGFILE_ON_V	A4	01	
CEEOCB_MSGFILE_RECFM	0		
CEEOCB_MSGFILE_RECFM_LENGTH	0		
CEEOCB_MSGFILE_RECFM_O	8		
CEEOCB_MSGFILE_RECFM_S	0		
CEEOCB_MSGFILE_RECFM_STRING	2		
CEEOCB_MSGFILE_RECFM_V	0	40	
CEEOCB_MSGFILE_SUB_OPTIONS	A8		

Table 41. Options Control Block (OCB) Cross Reference (continued)

Name	Hex Offset	Hex Value	Description
CEEOCB_MSGFILE_SUB_OPTS	0		
CEEOCB_MSGFILE_SUB_OPTS_V	0		
CEEOCB_MSGFILE_WHERE_SET	A6		
CEEOCB_MSGQ	9C		
CEEOCB_MSGQ_BIT_FLAG	9C		
CEEOCB_MSGQ_N	4		
CEEOCB_MSGQ_N_V	0	80	
CEEOCB_MSGQ_NOOVERRIDE	9C	40	
CEEOCB_MSGQ_ON	9C	80	
CEEOCB_MSGQ_ON_V	9C	01	
CEEOCB_MSGQ_SUB_OPTIONS	A0		
CEEOCB_MSGQ_SUB_OPTS	0		
CEEOCB_MSGQ_SUB_OPTS_V	0		
CEEOCB_MSGQ_WHERE_SET	9E		
CEEOCB_NAMELIST	1AC		
CEEOCB_NAMELIST_BIT_FLAG	1AC		
CEEOCB_NAMELIST_LEVEL	4		
CEEOCB_NAMELIST_LEVEL_V	0	80	
CEEOCB_NAMELIST_NOOVERRIDE	1AC	40	
CEEOCB_NAMELIST_ON	1AC	80	
CEEOCB_NAMELIST_ON_V	1AC	01	
CEEOCB_NAMELIST_SUB_OPTIONS	1B0		
CEEOCB_NAMELIST_SUB_OPTS	0		
CEEOCB_NAMELIST_SUB_OPTS_V	0		
CEEOCB_NAMELIST_WHERE_SET	1AE		
CEEOCB_NATLANG	AC		
CEEOCB_NATLANG_BIT_FLAG	AC		
CEEOCB_NATLANG_NATIONAL_LANG	4		
CEEOCB_NATLANG_NATIONAL_LANG_V	0	80	
CEEOCB_NATLANG_NOOVERRIDE	AC	40	
CEEOCB_NATLANG_ON	AC	80	
CEEOCB_NATLANG_ON_V	AC	01	
CEEOCB_NATLANG_SUB_BIT_FLAG	7		
CEEOCB_NATLANG_SUB_OPTIONS	B0		
CEEOCB_NATLANG_SUB_OPTS	0		
CEEOCB_NATLANG_SUB_OPTS_V	0		
CEEOCB_NATLANG_UENGLISH	7	80	

Table 41. Options Control Block (OCB) Cross Reference (continued)

Name	Hex Offset	Hex Value	Description
CEEOCB_NATLANG_WHERE_SET	AE		
CEEOCB_NONIPTSTACK	14C		
CEEOCB_NONIPTSTACK_BIT_FLAG	14C		
CEEOCB_NONIPTSTACK_DISPOSITION	0	40	
CEEOCB_NONIPTSTACK_DISPOSITION_V	0	10	
CEEOCB_NONIPTSTACK_INCR_SIZE	0		
CEEOCB_NONIPTSTACK_INCR_SIZE_V	0	40	
CEEOCB_NONIPTSTACK_INIT_SIZE	0		
CEEOCB_NONIPTSTACK_INIT_SIZE_V	0	80	
CEEOCB_NONIPTSTACK_LOCATION	0	80	
CEEOCB_NONIPTSTACK_LOCATION_V	0	20	
CEEOCB_NONIPTSTACK_NOOVERRIDE	14C	40	
CEEOCB_NONIPTSTACK_ON	14C	80	
CEEOCB_NONIPTSTACK_ON_V	14C	01	
CEEOCB_NONIPTSTACK_SUB_BIT_FLAG	1		
CEEOCB_NONIPTSTACK_SUB_OPTIONS	150		
CEEOCB_NONIPTSTACK_SUB_OPTS	0		
CEEOCB_NONIPTSTACK_SUB_OPTS_V	0		
CEEOCB_NONIPTSTACK_WHERE_SET	14E		
CEEOCB_OCSTATUS	BC		
CEEOCB_OCSTATUS_BIT_FLAG	BC		
CEEOCB_OCSTATUS_NOOVERRIDE	BC	40	
CEEOCB_OCSTATUS_ON	BC	80	
CEEOCB_OCSTATUS_ON_V	BC	01	
CEEOCB_OCSTATUS_SUB_OPTIONS	C0		
CEEOCB_OCSTATUS_WHERE_SET	BE		
CEEOCB_PC	1B4		
CEEOCB_PC_BIT_FLAG	1B4		
CEEOCB_PC_NOOVERRIDE	1B4	40	
CEEOCB_PC_ON	1B4	80	
CEEOCB_PC_ON_V	1B4	01	
CEEOCB_PC_SUB_OPTIONS	1B8		
CEEOCB_PC_WHERE_SET	1B6		
CEEOCB_PLITASKCOUNT	3C		
CEEOCB_PLITASKCOUNT_BIT_FLAG	3C		
CEEOCB_PLITASKCOUNT_NOOVERRIDE	3C	40	
CEEOCB_PLITASKCOUNT_ON	3C	80	

Table 41. Options Control Block (OCB) Cross Reference (continued)

Name	Hex Offset	Hex Value	Description
CEEOCB_PLITASKCOUNT_ON_V	3C	01	
CEEOCB_PLITASKCOUNT_SUB_OPTIONS	40		
CEEOCB_PLITASKCOUNT_SUB_OPTS	0		
CEEOCB_PLITASKCOUNT_SUB_OPTS_V	0		
CEEOCB_PLITASKCOUNT_TASKS_V	0	80	
CEEOCB_PLITASKCOUNT_TASKS	0		
CEEOCB_PLITASKCOUNT_WHERE_SET	3E		
CEEOCB_POSIX	C4		
CEEOCB_POSIX_BIT_FLAG	C4		
CEEOCB_POSIX_NOOVERRIDE	C4	40	
CEEOCB_POSIX_ON	C4	80	
CEEOCB_POSIX_ON_V	C4	01	
CEEOCB_POSIX_SUB_OPTIONS	C8		
CEEOCB_POSIX_WHERE_SET	C6		
CEEOCB_PROFILE	1DC		
CEEOCB_PROFILE_BIT_FLAG	1DC		
CEEOCB_PROFILE_NOOVERRIDE	1DC	40	
CEEOCB_PROFILE_ON	1DC	80	
CEEOCB_PROFILE_ON_V	1DC	01	
CEEOCB_PROFILE_STRING	0		
CEEOCB_PROFILE_STRING_LENGTH	0		
CEEOCB_PROFILE_STRING_O	0		
CEEOCB_PROFILE_STRING_S	0		
CEEOCB_PROFILE_STRING_STRING	2		
CEEOCB_PROFILE_STRING_V	0	80	
CEEOCB_PROFILE_SUB_OPTIONS	1E0		
CEEOCB_PROFILE_SUB_OPTS	0		
CEEOCB_PROFILE_SUB_OPTS_V	0		
CEEOCB_PROFILE_WHERE_SET	1DE		
CEEOCB_PRTUNIT	134		
CEEOCB_PRTUNIT_BIT_FLAG	134		
CEEOCB_PRTUNIT_N	4		
CEEOCB_PRTUNIT_N_V	0	80	
CEEOCB_PRTUNIT_NOOVERRIDE	134	40	
CEEOCB_PRTUNIT_ON	134	80	
CEEOCB_PRTUNIT_ON_V	134	01	
CEEOCB_PRTUNIT_SUB_OPTIONS	138		

Table 41. Options Control Block (OCB) Cross Reference (continued)

Name	Hex Offset	Hex Value	Description
CEEOCB_PRTUNIT_SUB_OPTS	0		
CEEOCB_PRTUNIT_SUB_OPTS_V	0		
CEEOCB_PRTUNIT_WHERE_SET	136		
CEEOCB_PUNUNIT	18C		
CEEOCB_PUNUNIT_BIT_FLAG	18C		
CEEOCB_PUNUNIT_N	4		
CEEOCB_PUNUNIT_N_V	0	80	
CEEOCB_PUNUNIT_NOOVERRIDE	18C	40	
CEEOCB_PUNUNIT_ON	18C	80	
CEEOCB_PUNUNIT_ON_V	18C	01	
CEEOCB_PUNUNIT_SUB_OPTIONS	190		
CEEOCB_PUNUNIT_SUB_OPTS	0		
CEEOCB_PUNUNIT_SUB_OPTS_V	0		
CEEOCB_PUNUNIT_WHERE_SET	18E		
CEEOCB_RDRUNIT	194		
CEEOCB_RDRUNIT_BIT_FLAG	194		
CEEOCB_RDRUNIT_N	4		
CEEOCB_RDRUNIT_N_V	0	80	
CEEOCB_RDRUNIT_NOOVERRIDE	194	40	
CEEOCB_RDRUNIT_ON	194	80	
CEEOCB_RDRUNIT_ON_V	194	01	
CEEOCB_RDRUNIT_SUB_OPTIONS	198		
CEEOCB_RDRUNIT_SUB_OPTS	0		
CEEOCB_RDRUNIT_SUB_OPTS_V	0		
CEEOCB_RDRUNIT_WHERE_SET	196		
CEEOCB_RECPAD	19C		
CEEOCB_RECPAD_BIT_FLAG	19C		
CEEOCB_RECPAD_LEVEL	4		
CEEOCB_RECPAD_LEVEL_V	0	80	
CEEOCB_RECPAD_NOOVERRIDE	19C	40	
CEEOCB_RECPAD_ON	19C	80	
CEEOCB_RECPAD_ON_V	19C	01	
CEEOCB_RECPAD_SUB_OPTIONS	1A0		
CEEOCB_RECPAD_SUB_OPTS	0		
CEEOCB_RECPAD_SUB_OPTS_V	0		
CEEOCB_RECPAD_WHERE_SET	19E		
CEEOCB_ROUNDED_VALUES	0		

Table 41. Options Control Block (OCB) Cross Reference (continued)

Name	Hex Offset	Hex Value	Description
CEEOCB_RPTOPTS	154		
CEEOCB_RPTOPTS_BIT_FLAG	154		
CEEOCB_RPTOPTS_NOOVERRIDE	154	40	
CEEOCB_RPTOPTS_ON	154	80	
CEEOCB_RPTOPTS_ON_V	154	01	
CEEOCB_RPTOPTS_SUB_OPTIONS	158		
CEEOCB_RPTOPTS_WHERE_SET	156		
CEEOCB_RPTSTG	CC		
CEEOCB_RPTSTG_BIT_FLAG	CC		
CEEOCB_RPTSTG_NOOVERRIDE	CC	40	
CEEOCB_RPTSTG_ON	CC	80	
CEEOCB_RPTSTG_ON_V	CC	01	
CEEOCB_RPTSTG_SUB_OPTIONS	D0		
CEEOCB_RPTSTG_WHERE_SET	CE		
CEEOCB_RSVD1	14		
CEEOCB_RSVD1_BIT_FLAG	14		
CEEOCB_RSVD1_NOOVERRIDE	14	40	
CEEOCB_RSVD1_ON	14	80	
CEEOCB_RSVD1_ON_V	14	01	
CEEOCB_RSVD1_SUB_OPTIONS	18		
CEEOCB_RSVD1_WHERE_SET	16		
CEEOCB_RTEREUS	D4		
CEEOCB_RTEREUS_BIT_FLAG	D4		
CEEOCB_RTEREUS_NOOVERRIDE	D4	40	
CEEOCB_RTEREUS_ON	D4	80	
CEEOCB_RTEREUS_ON_V	D4	01	
CEEOCB_RTEREUS_SUB_OPTIONS	D8		
CEEOCB_RTEREUS_WHERE_SET	D6		
CEEOCB_RTLS	1CC		
CEEOCB_RTLS_BIT_FLAG	1CC		
CEEOCB_RTLS_NOOVERRIDE	1CC	40	
CEEOCB_RTLS_ON	1CC	80	
CEEOCB_RTLS_ON_V	1CC	01	
CEEOCB_RTLS_SUB_OPTIONS	1DE		
CEEOCB_RTLS_WHERE_SET	1CE		
CEEOCB_SIMVRD	DC		
CEEOCB_SIMVRD_BIT_FLAG	DC		

Table 41. Options Control Block (OCB) Cross Reference (continued)

Name	Hex Offset	Hex Value	Description
CEEOCB_SIMVRD_NOOVERRIDE	DC	40	
CEEOCB_SIMVRD_ON	DC	80	
CEEOCB_SIMVRD_ON_V	DC	01	
CEEOCB_SIMVRD_SUB_OPTIONS	E0		
CEEOCB_SIMVRD_WHERE_SET	DE		
CEEOCB_STACK	E4		
CEEOCB_STACK_BIT_FLAG	E4		
CEEOCB_STACK_DISPOSITION	C	40	
CEEOCB_STACK_DISPOSITION_V	0	10	
CEEOCB_STACK_DSINIT_SIZE	10		
CEEOCB_STACK_DSINCR_SIZE	14		
CEEOCB_STACK_INCR_SIZE	8		
CEEOCB_STACK_INCR_SIZE_RND	2C		
CEEOCB_STACK_INCR_SIZE_V	0	40	
CEEOCB_STACK_INIT_SIZE	4		
CEEOCB_STACK_INIT_SIZE_RND	28		
CEEOCB_STACK_INIT_SIZE_V	0	80	
CEEOCB_STACK_LOCATION	C	80	
CEEOCB_STACK_LOCATION_V	0	20	
CEEOCB_STACK_NOOVERRIDE	E4	40	
CEEOCB_STACK_ON	E4	80	
CEEOCB_STACK_ON_V	E4	01	
CEEOCB_STACK_SUB_BIT_FLAG	C		
CEEOCB_STACK_SUB_OPTIONS	E8		
CEEOCB_STACK_SUB_OPTS	0		
CEEOCB_STACK_SUB_OPTS_V	0		
CEEOCB_STACK_WHERE_SET	E6		
CEEOCB_STORAGE	EC		
CEEOCB_STORAGE_BIT_FLAG	EC		
CEEOCB_STORAGE_DSA_ALLOC_SET	4	20	
CEEOCB_STORAGE_DSA_ALLOC_V	0	20	
CEEOCB_STORAGE_DSA_ALLOC_VALUE	7		
CEEOCB_STORAGE_HEAP_ALLOC_SET	4	80	
CEEOCB_STORAGE_HEAP_ALLOC_V	0	80	
CEEOCB_STORAGE_HEAP_ALLOC_VALUE	5		
CEEOCB_STORAGE_HEAP_FREE_SET	4	40	
CEEOCB_STORAGE_HEAP_FREE_V	0	40	

Table 41. Options Control Block (OCB) Cross Reference (continued)

Name	Hex Offset	Hex Value	Description
CEEOCB_STORAGE_HEAP_FREE_VALUE	6		
CEEOCB_STORAGE_NOOVERRIDE	EC	40	
CEEOCB_STORAGE_ON	EC	80	
CEEOCB_STORAGE_ON_V	EC	01	
CEEOCB_STORAGE_RESERVE_SIZE	8		
CEEOCB_STORAGE_RESERVE_SIZE_RND	30		
CEEOCB_STORAGE_RESERVE_SIZE_V	0	10	
CEEOCB_STORAGE_SUB_OPTIONS	F0		
CEEOCB_STORAGE_SUB_OPTS	0		
CEEOCB_STORAGE_SUB_OPTS_FLAGS	4		
CEEOCB_STORAGE_SUB_OPTS_V	0		
CEEOCB_STORAGE_WHERE_SET	EE		
CEEOCB_TERMTHDACT	16C		
CEEOCB_TERMTHDACT_BIT_FLAG	16C		
CEEOCB_TERMTHDACT_CICSDEST	8		
CEEOCB_TERMTHDACT_CICSDEST_V	0	10	
CEEOCB_TERMTHDACT_LEVEL	4		
CEEOCB_TERMTHDACT_LEVEL_V	0	80	
CEEOCB_TERMTHDACT_NOOVERRIDE	16C	40	
CEEOCB_TERMTHDACT_ON	16C	80	
CEEOCB_TERMTHDACT_ON_V	16C	01	
CEEOCB_TERMTHDACT_RESTOR	C		
CEEOCB_TERMTHDACT_RESTOR_V	0	20	
CEEOCB_TERMTHDACT_SUB_OPTIONS	170		
CEEOCB_TERMTHDACT_SUB_OPTS	0		
CEEOCB_TERMTHDACT_SUB_OPTS_V	0		
CEEOCB_TERMTHDACT_WHERE_SET	16E		
CEEOCB_TEST	10C		
CEEOCB_TEST_BIT_FLAG	10C		
CEEOCB_TEST_COMMAND_FILE	0		
CEEOCB_TEST_COMMAND_FILE_LEN	0		
CEEOCB_TEST_COMMAND_FILE_O	8		
CEEOCB_TEST_COMMAND_FILE_S	0		
CEEOCB_TEST_COMMAND_FILE_STR	2		
CEEOCB_TEST_COMMAND_FILE_V	0	40	
CEEOCB_TEST_CONTROL	4		
CEEOCB_TEST_CONTROL_V	0	80	

Table 41. Options Control Block (OCB) Cross Reference (continued)

Name	Hex Offset	Hex Value	Description
CEEOCB_TEST_INIT_COMMAND	0		
CEEOCB_TEST_INIT_COMMAND_LEN	0		
CEEOCB_TEST_INIT_COMMAND_O	C		
CEEOCB_TEST_INIT_COMMAND_S	0		
CEEOCB_TEST_INIT_COMMAND_STR	2		
CEEOCB_TEST_INIT_COMMAND_V	0	20	
CEEOCB_TEST_NOOVERRIDE	10C	40	
CEEOCB_TEST_ON	10C	80	
CEEOCB_TEST_ON_V	10C	01	
CEEOCB_TEST_PREFERENCE_FILE	0		
CEEOCB_TEST_PREFERENCE_FILE_LEN	0		
CEEOCB_TEST_PREFERENCE_FILE_O	10		
CEEOCB_TEST_PREFERENCE_FILE_S	0		
CEEOCB_TEST_PREFERENCE_FILE_STR	2		
CEEOCB_TEST_PREFERENCE_FILE_V	0	10	
CEEOCB_TEST_SUB_OPTIONS	110		
CEEOCB_TEST_SUB_OPTS	0		
CEEOCB_TEST_SUB_OPTS_V	0		
CEEOCB_TEST_WHERE_SET	10E		
CEEOCB_THREADHEAP	104		
CEEOCB_THREADHEAP_BIT_FLAG	104		
CEEOCB_THREADHEAP_DISPOSITION	0	40	
CEEOCB_THREADHEAP_DISPOSITION_V	0	10	
CEEOCB_THREADHEAP_INCR_SIZE	0		
CEEOCB_THREADHEAP_INCR_SIZE_V	0	40	
CEEOCB_THREADHEAP_INIT_SIZE	0		
CEEOCB_THREADHEAP_INIT_SIZE_V	0	80	
CEEOCB_THREADHEAP_LOCATION	0	80	
CEEOCB_THREADHEAP_LOCATION_V	0	20	
CEEOCB_THREADHEAP_NOOVERRIDE	104	40	
CEEOCB_THREADHEAP_ON	104	80	
CEEOCB_THREADHEAP_ON_V	104	01	
CEEOCB_THREADHEAP_SUB_BIT_FLAG	0		
CEEOCB_THREADHEAP_SUB_OPTIONS	108		
CEEOCB_THREADHEAP_SUB_OPTS	0		
CEEOCB_THREADHEAP_SUB_OPTS_V	0		
CEEOCB_THREADHEAP_WHERE_SET	106		

Table 41. Options Control Block (OCB) Cross Reference (continued)

Name	Hex Offset	Hex Value	Description
CEEOCB_THREADSTACK	114		
CEEOCB_THREADSTACK_BIT_FLAG	114		
CEEOCB_THREADSTACK_DISPOSITION	C	40	
CEEOCB_THREADSTACK_DISPOSITION_V	0	10	
CEEOCB_THREADSTACK_DSINIT_SIZE	10	10	
CEEOCB_THREADSTACK_DSINCR_SIZE	14	14	
CEEOCB_THREADSTACK_INCR_SIZE	8		
CEEOCB_THREADSTACK_INCR_SIZE_V	0	40	
CEEOCB_THREADSTACK_INIT_SIZE	4		
CEEOCB_THREADSTACK_INIT_SIZE_V	0	80	
CEEOCB_THREADSTACK_LOCATION	C	80	
CEEOCB_THREADSTACK_LOCATION_V	0	20	
CEEOCB_THREADSTACK_NOOVERRIDE	114	40	
CEEOCB_THREADSTACK_ON	114	80	
CEEOCB_THREADSTACK_ON_V	114	01	
CEEOCB_THREADSTACK_SUB_BIT_FLAG	C		
CEEOCB_THREADSTACK_SUB_OPTIONS	118		
CEEOCB_THREADSTACK_SUB_OPTS	0		
CEEOCB_THREADSTACK_SUB_OPTS_V	0		
CEEOCB_THREADSTACK_WHERE_SET	116		
CEEOCB_TRACE	FC		
CEEOCB_TRACE_BIT_FLAG	FC		
CEEOCB_TRACE_CEL	4		
CEEOCB_TRACE_CEL_S	0	40	
CEEOCB_TRACE_CEL_V	0	40	
CEEOCB_TRACE_COBOL	14		
CEEOCB_TRACE_COBOL_S	0	04	
CEEOCB_TRACE_COBOL_V	0	04	
CEEOCB_TRACE_C370	C		
CEEOCB_TRACE_C370_S	0	10	
CEEOCB_TRACE_C370_V	0	10	
CEEOCB_TRACE_DCE	20		
CEEOCB_TRACE_DCE_S	1	80	
CEEOCB_TRACE_DCE_V	1	80	
CEEOCB_TRACE_DUMP	1	80	
CEEOCB_TRACE_DUMP_V	1	20	
CEEOCB_TRACE_FORTRAN	1C		

Table 41. Options Control Block (OCB) Cross Reference (continued)

Name	Hex Offset	Hex Value	Description
CEEOCB_TRACE_FORTRAN_S	0	01	
CEEOCB_TRACE_FORTRAN_V	0	01	
CEEOCB_TRACE_GLOBAL	1	20	
CEEOCB_TRACE_GLOBAL_V	0	40	
CEEOCB_TRACE_FLAGS	C		
CEEOCB_TRACE_INSPECT	18		
CEEOCB_TRACE_INSPECT_S	0	02	
CEEOCB_TRACE_INSPECT_V	0	02	
CEEOCB_TRACE_LEVELS	0		
CEEOCB_TRACE_LVL	0		
CEEOCB_TRACE_LVL_O	0		
CEEOCB_TRACE_LVL_S	0		
CEEOCB_TRACE_LVL_S_FLAGS	0		
CEEOCB_TRACE_LVL_S_O	0		
CEEOCB_TRACE_LVL_V	0		
CEEOCB_TRACE_LVL_V_FLAGS	0		
CEEOCB_TRACE_LVL_V_O	0		
CEEOCB_TRACE_NOOVERRIDE	FC	40	
CEEOCB_TRACE_ON	FC	80	
CEEOCB_TRACE_ON_V	FC	01	
CEEOCB_TRACE_PLI	28		
CEEOCB_TRACE_PLI_S	1	20	
CEEOCB_TRACE_PLI_V	1	20	
CEEOCB_TRACE_PLI2	2C		
CEEOCB_TRACE_PLI2_S	1	10	
CEEOCB_TRACE_PLI2_V	1	10	
CEEOCB_TRACE_SAS	38		
CEEOCB_TRACE_SAS_S	1	02	
CEEOCB_TRACE_SAS_V	1	02	
CEEOCB_TRACE_SOCKET	30		
CEEOCB_TRACE_SOCKET_S	1	08	
CEEOCB_TRACE_SOCKET_V	1	08	
CEEOCB_TRACE_SUB_OPTIONS	100		
CEEOCB_TRACE_SUB_OPTS	0		
CEEOCB_TRACE_SUB_OPTS_V	0		
CEEOCB_TRACE_TBL_SIZE	0		
CEEOCB_TRACE_TBL_SIZE_V	0	80	

Table 41. Options Control Block (OCB) Cross Reference (continued)

Name	Hex Offset	Hex Value	Description
CEEOCB_TRACE_WHERE_SET	FE		
CEEOCB_TRAP	11C		
CEEOCB_TRAP_BIT_FLAG	11C		
CEEOCB_TRAP_FLAGS	0		
CEEOCB_TRAP_NOOVERRIDE	11C	40	
CEEOCB_TRAP_ON	11C	80	
CEEOCB_TRAP_ON_V	11C	01	
CEEOCB_TRAP_SUB_OPTIONS	120		
CEEOCB_TRAP_SUB_OPTS	0		
CEEOCB_TRAP_SUB_OPTS_V	0		
CEEOCB_TRAP_SPIE_V	0	80	
CEEOCB_TRAP_SPIE	0	80	
CEEOCB_TRAP_WHERE_SET	11E		
CEEOCB_UPSI	124		
CEEOCB_UPSI_BIT_FLAG	124		
CEEOCB_UPSI_N	4		
CEEOCB_UPSI_N_V	0	80	
CEEOCB_UPSI_NOOVERRIDE	124	40	
CEEOCB_UPSI_ON	124	80	
CEEOCB_UPSI_ON_V	124	01	
CEEOCB_UPSI_SUB_OPTIONS	128		
CEEOCB_UPSI_SUB_OPTS	0		
CEEOCB_UPSI_SUB_OPTS_V	0		
CEEOCB_UPSI_WHERE_SET	126		
CEEOCB_USRHDLR	1A4		
CEEOCB_USRHDLR_BIT_FLAG	1A4		
CEEOCB_USRHDLR_NOOVERRIDE	1A4	40	
CEEOCB_USRHDLR_ON	1A4	80	
CEEOCB_USRHDLR_ON_V	1A4	01	
CEEOCB_USRHDLR_ROUTINE	0		
CEEOCB_USRHDLR_ROUTINE_LENGTH	0		
CEEOCB_USRHDLR_ROUTINE_O	4		
CEEOCB_USRHDLR_ROUTINE_S	0		
CEEOCB_USRHDLR_ROUTINE_STRING	2		
CEEOCB_USRHDLR_ROUTINE_V	0	80	
CEEOCB_USRHDLR_SUB_OPTIONS	1A8		
CEEOCB_USRHDLR_SUB_OPTS	0		

Table 41. Options Control Block (OCB) Cross Reference (continued)

Name	Hex Offset	Hex Value	Description
CEEOCB_USRHDLR_SUB_OPTS_V	0		
CEEOCB_USRHDLR_SUPERHDLR_LENGTH	0		
CEEOCB_USRHDLR_SUPERHDLR_O	4		
CEEOCB_USRHDLR_SUPERHDLR_S	0		
CEEOCB_USRHDLR_SUPERHDLR_STRING	2		
CEEOCB_USRHDLR_SUPERHDLR_V	0	40	
CEEOCB_USRHDLR_WHERE_SET	1A6		
CEEOCB_VCTRSAVE	12C		
CEEOCB_VCTRSAVE_BIT_FLAG	12C		
CEEOCB_VCTRSAVE_NOOVERRIDE	12C	40	
CEEOCB_VCTRSAVE_ON	12C	80	
CEEOCB_VCTRSAVE_ON_V	12C	01	
CEEOCB_VCTRSAVE_SUB_OPTIONS	130		
CEEOCB_VCTRSAVE_WHERE_SET	12E		
CEEOCB_VERSION	1C4		
CEEOCB_VERSION_BIT_FLAG	1C4		
CEEOCB_VERSION_NAME	0		
CEEOCB_VERSION_NAME_LENGTH	0		
CEEOCB_VERSION_NAME_O	0		
CEEOCB_VERSION_NAME_S	0		
CEEOCB_VERSION_NAME_STRING	2		
CEEOCB_VERSION_NAME_V	0	80	
CEEOCB_VERSION_NOOVERRIDE	1C4	40	
CEEOCB_VERSION_ON	1C4	80	
CEEOCB_VERSION_ON_V	1C4	01	
CEEOCB_VERSION_RELEASE	8		
CEEOCB_VERSION_SUB_OPTIONS	1C8		
CEEOCB_VERSION_SUB_OPTS	0		
CEEOCB_VERSION_SUB_OPTS_V	0		
CEEOCB_VERSION_WHERE_SET	1C6		
CEEOCB_XPLINK	1F4		
CEEOCB_XPLINK_BIT_FLAG	1F4		
CEEOCB_XPLINK_NOOVERRIDE	0	40	
CEEOCB_XPLINK_ON	0	80	
CEEOCB_XPLINK_ON_V	0	01	
CEEOCB_XPLINK_SUB_OPTIONS	1F8		
CEEOCB_XPLINK_WHERE_SET	1F6		

Table 41. Options Control Block (OCB) Cross Reference (continued)

Name	Hex Offset	Hex Value	Description
CEEOCB_XUFLOW	13C		
CEEOCB_XUFLOW_BIT_FLAG	13C		
CEEOCB_XUFLOW_LEVEL	4		
CEEOCB_XUFLOW_LEVEL_V	0	80	
CEEOCB_XUFLOW_NOOVERRIDE	13C	40	
CEEOCB_XUFLOW_ON	13C	80	
CEEOCB_XUFLOW_ON_V	13C	01	
CEEOCB_XUFLOW_SUB_OPTIONS	140		
CEEOCB_XUFLOW_SUB_OPTS	0		
CEEOCB_XUFLOW_SUB_OPTS_V	0		
CEEOCB_XUFLOW_WHERE_SET	13E		

Supplementary Options Control Block

The following three tables show the format of the SOCB, which is the supplementary options control block:

- Table 38 on page 589 shows the type field definitions.
- Table 42 shows the SOCB field descriptions.
- Table 43 on page 645 shows the SOCB constants.
- Table 44 on page 645 shows the SOCB cross reference information.

Table 42. Supplementary Options Control Block (SOCB) Field Descriptions

Offsets		Type	Len	Name (Dim) (*= Reserved)
Dec	Hex			
0	(0)	STRUCTURE	44	CEESOCB
0	(0)	SIGNED	2	CEESOCB_VERSION_RELEASE
2	(2)	SIGNED	2	CEESOCB_LENGTH
4	(4)	CHARACTER	8	CEESOCB_EXECOPS
4	(4)	BITSTRING	1	CEESOCB_EXECOPS_BIT_FLAG
		1...		CEESOCB_EXECOPS_ON
		.1..		CEESOCB_EXECOPS_NOOVERRIDE
		..11 111.		*
		1		CEESOCB_EXECOPS_ON_V
5	(5)	BITSTRING	1	*
6	(6)	SIGNED	2	CEESOCB_EXECOPS_WHERE_SET
8	(8)	PTR INTOAREA	4	CEESOCB_EXECOPS_SUB_OPTIONS
12	(C)	CHARACTER	8	CEESOCB_REDIR
12	(C)	BITSTRING	1	CEESOCB_REDIR_BIT_FLAG
		1...		CEESOCB_REDIR_ON
		.1..		CEESOCB_REDIR_NOOVERRIDE

Table 42. Supplementary Options Control Block (SOCB) Field Descriptions (continued)

Offsets		Type	Len	Name (Dim) (*= Reserved)
Dec	Hex			
		..11 111.		*
		1		CEESOCB_REDIR_ON_V
13	(D)	BITSTRING	1	*
14	(E)	SIGNED	2	CEESOCB_REDIR_WHERE_SET
16	(10)	PTR INTOAREA	4	CEESOCB_REDIR_SUB_OPTIONS
20	(14)	CHARACTER	8	CEESOCB_ARGPARSE
20	(14)	BITSTRING	1	CEESOCB_ARGPARSE_BIT_FLAG
		1...		CEESOCB_ARGPARSE_ON
		.1..		CEESOCB_ARGPARSE_NOOVERRIDE
		..11 111.		*
		1		CEESOCB_ARGPARSE_ON_V
21	(15)	BITSTRING	1	*
22	(16)	SIGNED	2	CEESOCB_ARGPARSE_WHERE_SET
24	(18)	PTR INTOAREA	4	CEESOCB_ARGPARSE_SUB_OPTIONS
28	(1C)	CHARACTER	8	CEESOCB_ENV
28	(1C)	BITSTRING	1	CEESOCB_ENV_BIT_FLAG
		1...		CEESOCB_ENV_ON
		.1..		CEESOCB_ENV_NOOVERRIDE
		..11 111.		*
		1		CEESOCB_ENV_ON_V
29	(1D)	BITSTRING	1	*
30	(1E)	SIGNED	2	CEESOCB_ENV_WHERE_SET
32	(20)	PTR INTOAREA	4	CEESOCB_ENV_SUB_OPTIONS
36	(24)	CHARACTER	8	CEESOCB_PLIST
36	(24)	BITSTRING	1	CEESOCB_PLIST_BIT_FLAG
		1...		CEESOCB_PLIST_ON
		.1..		CEESOCB_PLIST_NOOVERRIDE
		..11 111.		*
		1		CEESOCB_PLIST_ON_V
37	(25)	BITSTRING	1	*
38	(26)	SIGNED	2	CEESOCB_PLIST_WHERE_SET
40	(28)	PTR INTOAREA	4	CEESOCB_PLIST_SUB_OPTIONS
End of fixed portion				
0	(0)	STRUCTURE	8	CEESOCB_ENV_SUB_OPTS
0	(0)	BITSTRING	4	CEESOCB_ENV_SUB_OPTS_V
		1...		CEESOCB_ENV_OP_V

Table 42. Supplementary Options Control Block (SOCB) Field Descriptions (continued)

Offsets		Type	Len	Name (Dim) (*= Reserved)
Dec	Hex			
0	(0)	BITSTRING	3	*
4	(4)	SIGNED	4	CEESOCB_ENV_OP
0	(0)	STRUCTURE	8	CEESOCB_PLIST_SUB_OPTS
0	(0)	BITSTRING	4	CEESOCB_PLIST_SUB_OPTS_V
		1...		CEESOCB_PLIST_FORMAT_V
0	(0)	BITSTRING	3	*
4	(4)	SIGNED	4	CEESOCB_PLIST_FORMAT

Table 43. Supplementary Options Control Block (SOCB) Constants

Len	Type	Value	Name	Description
4	DECIMAL	60	SOCB_LENGTH	
4	DECIMAL	1	CEESOCB_PLIST_CMS	
4	DECIMAL	2	CEESOCB_PLIST_HOST	
4	DECIMAL	3	CEESOCB_PLIST_MVS	
4	DECIMAL	4	CEESOCB_PLIST_TSO	
4	DECIMAL	5	CEESOCB_PLIST_CICS	
4	DECIMAL	6	CEESOCB_PLIST_IMS	
4	DECIMAL	7	CEESOCB_PLIST_OS	
4	DECIMAL	1	CEESOCB_ENV_CMS	
4	DECIMAL	2	CEESOCB_ENV_MVS	
4	DECIMAL	3	CEESOCB_ENV_IMS	

Table 44. Supplementary Options Control Block (SOCB) Cross Reference

Name	Hex Offset	Hex Value
CEESOCB	0	
CEESOCB_ARGPARSE	14	
CEESOCB_ARGPARSE_BIT_FLAG	14	
CEESOCB_ARGPARSE_NOOVERRIDE	14	40
CEESOCB_ARGPARSE_ON	14	80
CEESOCB_ARGPARSE_ON_V	14	01
CEESOCB_ARGPARSE_SUB_OPTIONS	18	
CEESOCB_ARGPARSE_WHERE_SET	16	
CEESOCB_ENV	1C	
CEESOCB_ENV_BIT_FLAG	1C	
CEESOCB_ENV_NOOVERRIDE	1C	40
CEESOCB_ENV_ON	1C	80
CEESOCB_ENV_ON_V	1C	01
CEESOCB_ENV_OP	4	
CEESOCB_ENV_OP_V	0	80

Table 44. Supplementary Options Control Block (SOCB) Cross Reference (continued)

Name	Hex Offset	Hex Value
CEESOCB_ENV_SUB_OPTIONS	20	
CEESOCB_ENV_SUB_OPTS	0	
CEESOCB_ENV_SUB_OPTS_V	0	
CEESOCB_ENV_WHERE_SET	1E	
CEESOCB_EXECOPS	4	
CEESOCB_EXECOPS_BIT_FLAG	4	
CEESOCB_EXECOPS_NOOVERRIDE	4	40
CEESOCB_EXECOPS_ON	4	80
CEESOCB_EXECOPS_ON_V	4	01
CEESOCB_EXECOPS_SUB_OPTIONS	8	
CEESOCB_EXECOPS_WHERE_SET	6	
CEESOCB_LENGTH	2	
CEESOCB_PLIST	24	
CEESOCB_PLIST_BIT_FLAG	24	
CEESOCB_PLIST_FORMAT	4	
CEESOCB_PLIST_FORMAT_V	0	80
CEESOCB_PLIST_NOOVERRIDE	24	40
CEESOCB_PLIST_ON	24	80
CEESOCB_PLIST_ON_V	24	01
CEESOCB_PLIST_SUB_OPTIONS	28	
CEESOCB_PLIST_SUB_OPTS	0	
CEESOCB_PLIST_SUB_OPTS_V	0	
CEESOCB_PLIST_WHERE_SET	26	
CEESOCB_REDIR	C	
CEESOCB_REDIR_BIT_FLAG	C	
CEESOCB_REDIR_NOOVERRIDE	C	40
CEESOCB_REDIR_ON	C	80
CEESOCB_REDIR_ON_V	C	01
CEESOCB_REDIR_SUB_OPTIONS	10	
CEESOCB_REDIR_WHERE_SET	E	
CEESOCB_VERSION_RELEASE	0	

Appendix B. Condition Information Block

Figure 111 shows a sample of the Condition Information Block.

```
  OFFSETS
    DEC     HEX   TYPE            LEN   NAME (DIM)              DESCRIPTION
     0      (0)   STRUCTURE       268   CEECIB
-------------------------------------------------------------------------------------------
     Condition Information Block - Prefix area. Area 0
-------------------------------------------------------------------------------------------
     0      (0)   CHARACTER        4    CIB_EYE                 Eye catcher.
     4      (4)   ADDRESS          4    CIB_BACK                Previous CIB.
     8      (8)   ADDRESS          4    CIB_FWRD                Next CIB.
    12      (C)   SIGNED           2    CIB_SIZ                 Size of ceexeb
    14      (E)   SIGNED           2    CIB_VER                 Version code of ceexeb
    16     (10)   SIGNED           4    CIB_PLAT_ID             Action Code.
    20     (14)   SIGNED           4    *                       Reserved. Do not use.
-------------------------------------------------------------------------------------------
     CIB Area provides for CSC Information. Area 1
-------------------------------------------------------------------------------------------
    24     (18)   CHARACTER      120    CIB_AREA1
    24     (18)   BITSTRING       12     CIB_COND               Current Lang Env Condition
    24     (18)   BITSTRING        8      CIB_COND_64           Condition Ident.
    32     (20)   ADDRESS          4      CIB_MIB               Pointer to the msg insert area.
    36     (24)   ADDRESS          4     CIB_MACHINE            Address of associated machine the
                                                                 Exception. I_Pgm_loc
    40     (28)   BITSTRING       12     CIB_OLD_COND           Initial Lang Env Condition
    40     (28)   BITSTRING        8      CIB_OLD_COND_64       Condition Ident.
    48     (30)   ADDRESS          4      CIB_OLD_MIB           Pointer to the msg insert area.
    52     (34)   BITSTRING        4     CIB_CSC_FLG
    52     (34)   BITSTRING        1      CIB_FLG_1
    53     (35)   BITSTRING        1      CIB_FLG_2
    54     (36)   BITSTRING        1      CIB_FLG_3
    55     (37)   BITSTRING        1      CIB_FLG_4
                   1...  ....              *                     Reserved.
                   .1..  ....              *                     Reserved.
                   ..1.  ....              *                     Reserved.
                   ...1  ....              *                     Reserved.
                   ....  1...              CIB_RSM_MVE           Resume cursor moved explicit
                   ....  .1..              CIB_MSG_OUT           Message service processed
                                                                 condition.
                   ....  ..1.              CIB_RSM_MVR           Resume cursor moved relative.
                   ....  ...1              *                     Reserved.
                                                                 the exception
    56     (38)   CHARACTER       12     CIB_HDL                The HandleCursor.
    56     (38)   ADDRESS          4      CIB_HDL_SF            Pointer to Stack Frame.
    60     (3C)   CHARACTER        8      CIB_HDL_ENTRY         Pointer to Current Handler
    60     (3C)   ADDRESS          4       CIB_HDL_EPT          Pointer to entry
    64     (40)   ADDRESS          4       CIB_HDL_RST          Pointer to Language Specific data
    68     (44)   CHARACTER       12     CIB_RSM                The Resume Cursor.
    68     (44)   ADDRESS          4      CIB_RSM_SF            Save area part.
    72     (48)   ADDRESS          4      CIB_RSM_POINT         Instruction address part
    76     (4C)   ADDRESS          4      CIB_RSM_MACHINE       Address of associated machine State.
    80     (50)   SIGNED           4     CIB_COND_DEFAULT       Default condition handler.
```

Figure 111. Condition Information Block (Part 1 of 3)

© Copyright IBM Corp. 1991, 2002

```
    84     (54)   ADDRESS          4     CIB_PH_CALLEE_SF       Physical callee DSA ptr
    88     (58)   CHARACTER        1     CIB_HDL_SF_FMT         Stack format for CIB_HDL_SF
                                                               (0 = up, 1 = down)
    89     (59)   CHARACTER        1     CIB_PH_CALLEE_SF_FMT   Stack format for CIB_PH_CALLEE_SF
                                                               (0 = up, 1 = down)
    90     (5A)   CHARACTER       54     *                      Reserved.

-------------------------------------------------------------------------------------------
     Vector hardware and math routines support Area 3
-------------------------------------------------------------------------------------------
   144     (90)   CHARACTER       32    CIB_VMA                 Vector and math support
   144     (90)   CHARACTER        8     CIB_VSR                Vector status register save area
   152     (98)   ADDRESS          4     CIB_VSTOR              A(of vector envir. save areas)
   156     (9C)   ADDRESS          4     CIB_VRPSA              A(1st vector reg pair save area)
   160     (A0)   ADDRESS          4     CIB_MCB                A(MCB at time of interrupt)
   164     (A4)   CHARACTER        8     CIB_MRN                Math routine name
   172     (AC)   BITSTRING        1     CIB_MFLAG              Math flag
                   1...  ....             CIB_MDSF1B0            ON for callable service and
                                                                 CWI, else OFF
                   .1..  ....             CIB_MDSF1B1            ON for callable service,
                                                                 else OFF
                   ..11  1111             *                      Method of math invocation
   173     (AD)   CHARACTER        3     *                      Reserved
-------------------------------------------------------------------------------------------
     Language Environment Exception Manager Flags. Area 4
-------------------------------------------------------------------------------------------
   176     (B0)   BITSTRING        4    CIB_BIT                 Status Flags.
   176     (B0)   BITSTRING        1     CIB_FLG_5              Language Environment Event
                   1...  ....             CIB_ABF                ABEND Caused.
                   .1..  ....             CIB_PCF                Program Check Caused.
                   ..1.  ....             CIB_KILL               Signal via CEEOKILL
                   ...1  ....             *                      Empty
                   ....  1...             CIB_TIU                Condition management raised TIU
                   ....  .1..             CIB_PROMO              New condition result from a
                                                                 promote.
                   ....  ..1.             CIB_SGL                Signaled condition.
                   ....  ...1             CIB_EXT                Attention Interrupt Caused.
   177     (B1)   BITSTRING        1     CIB_FLG_6              Language Environment Actions
                   1...  ....             CIB_ARCV               Abend reason code valid.
                   .1..  ....             CIB_MRC                Math routine condition.
                   ..1.  ....             CIB_ALW_RSM            Allow resume operation.
                   ...1  ....             CIB_MRC_TYP            MRC type 1.
                   ....  1...             CIB_ENABLE_ONLY        Enable only pass (no cond. pass)
                   ....  .1..             CIB_OWNING_SF          Hcursor pointing to owning SF
                   ....  ..1.             CIB_SF0                Doing post SF0 scan.
                   ....  ...1             CIB_TC_DONE            Members informed of condition.
   178     (B2)   BITSTRING        1     CIB_FLG_7              Named Conditions.
                   1...  ....             CIB_STG                Storage Condition.
                   .1..  ....             CIB_SDWA_SET           Indicates an SDWA is associated
                                                                 with the condition
                   ..1.  ....             *                      Empty.
                   ...1  ....             *                      Empty.
                   ....  1...             *                      Empty.
                   ....  .1..             *                      Empty.
                   ....  ..1.             *                      Empty.
                   ....  ...1             CIB_NOREC              Do not allow recursion cond
   179     (B3)   BITSTRING        1     CIB_FLG_8              Flags used to ask for dump.
```

Figure 111. Condition Information Block (Part 2 of 3)

```
-----------------------------------------------------------------------------------------------
     Language Environment Extras. Area 5
-----------------------------------------------------------------------------------------------
   180     (B4)   CHARACTER       88    CIB_AREA5
-----------------------------------------------------------------------------------------------
     ABEND Codes copied from the SDWA
-----------------------------------------------------------------------------------------------
   180     (B4)   SIGNED           4     CIB_ABCD               Abend code word.
   184     (B8)   SIGNED           4     CIB_ABRC               Abend Reason Word.
   188     (BC)   CHARACTER        8     CIB_ABNAME             Abend. load module name in sdwa
-----------------------------------------------------------------------------------------------
     Information relating to the most significant Save area.
-----------------------------------------------------------------------------------------------
   196     (C4)   ADDRESS          4     CIB_PL                 Pointer to the prolog
                                                                see cib_ppav for version of
                                                                PAA we are pointing at
   200     (C8)   ADDRESS          4     CIB_SV2                Save area of first significant
                                                                Language Environment Program
   204     (CC)   ADDRESS          4     CIB_SV1                Address of save area at time of the
                                                                exception.
   208     (D0)   ADDRESS          4     CIB_INT                Address of instruction causing
-----------------------------------------------------------------------------------------------
     Miscellaneous information.
-----------------------------------------------------------------------------------------------
   212     (D4)   BITSTRING        4     CIB_Q_DATA_TOKEN       Token passed by CICS Routine.
   216     (D8)   ADDRESS          4     CIB_FDBK               Address of feedback token for
                                                                signaled conditions.
   220     (DC)   SIGNED           4     CIB_FUN                Member list function code
   224     (E0)   CHARACTER        4     CIB_TOKE               Token from CEEHDL routines or Ptr to
                                                                SF that cased the poll to invoke Mbr
                                                                Ex Handler
   228     (E4)   CHARACTER        4     CIB_MID                ID Code at time of interrupt.
   232     (E8)   SIGNED           4     CIB_STATE              Codes used to identify activity
                                                                associated with this event.
   236     (EC)   SIGNED           4     CIB_RTCC               Action Code.
   240     (F0)   SIGNED           4     CIB_PPAV               Version of PPA in Cib_pl
                                                                -1 = C/370 Version 1
                                                                 1 = Language Environment 1.1.0
   244     (F4)   CHARACTER        8     CIB_AB_TERM_EXIT       Name of the abnorm term exit in
                                                                control.
   252     (FC)   ADDRESS          4     CIB_SDWA_PTR           Address of SDWA associated with
                                                                the condition.
   256    (100)   UNSIGNED         4     CIB_SIGNO              Signal number (This
                                                                field will be zero if the
                                                                associated condition has
                                                                not been mapped to
                                                                a signal)

   260    (104)   ADDRESS          4     CIB_PPSD               Pointer to Lang Env's copy
                                                                of the PPSD
                                                                (For a description of the PPSD,
                                                                see z/OS UNIX's BPXYPPSD
                                                                or Language Environment's
                                                                CEEOSIGD)
   264    (108)   CHARACTER        4     *                      Reserved.
```

Figure 111. Condition Information Block (Part 3 of 3)

Figure 112 on page 650 shows the cross reference summary of the Condition Information Block.

NAME	HEX OFFSET	HEX VALUE	LEVEL
CEECIB	0		1
CIB_AB_TERM_EXIT	F4		3
CIB_ABCD	B4		3
CIB_ABF	B0	80	4
CIB_ABNAME	BC		3
CIB_ABRC	B8		3
CIB_ALW_RSM	B1	20	4
CIB_ARCV	B1	80	4
CIB_AREA1	18		2
CIB_AREA5	B4		2
CIB_BACK	4		2
CIB_BIT	B0		2
CIB_COND	18		3
CIB_COND_DEFAULT	50		3
CIB_COND_64	18		4
CIB_CSC_FLG	34		3
CIB_ENABLE_ONLY	B1	08	4
CIB_EXT	B0	01	4
CIB_EYE	0		2
CIB_FDBK	D8		3
CIB_FLG_1	34		4
CIB_FLG_2	35		4
CIB_FLG_3	36		4
CIB_FLG_4	37		4
CIB_FLG_5	B0		3
CIB_FLG_6	B1		3
CIB_FLG_7	B2		3
CIB_FLG_8	B3		3
CIB_FUN	DC		3
CIB_FWRD	8		2
CIB_HDL	38		3
CIB_HDL_ENTRY	3C		4
CIB_HDL_EPT	3C		5
CIB_HDL_RST	40		5
CIB_HDL_SF	38		4
CIB_HDL_SF_FMT	58		3
CIB_INT	D0		3
CIB_KILL	B0	20	4
CIB_MACHINE	24		3
CIB_MCB	A0		3
CIB_MDSF1B0	AC	80	4
CIB_MDSF1B1	AC	40	4
CIB_MFLAG	AC		3
CIB_MIB	20		4
CIB_MID	E4		3
CIB_MRC	B1	40	4
CIB_MRC_TYP	B1	10	4
CIB_MRN	A4		3
CIB_MSG_OUT	37	04	5
CIB_NOREC	B2	01	4
CIB_OLD_COND	28		3
CIB_OLD_COND_64	28		4
CIB_OLD_MIB	30		4
CIB_OWNING_SF	B1	04	4
CIB_PCF	B0	40	4

Figure 112. Condition Information Block Cross Reference (Part 1 of 2)

CIB_PH_CALLEE_SF	54		3
CIB_PH_CALLEE_SF_FMT	59		3
CIB_PL	C4		3
CIB_PLAT_ID	10		2
CIB_PPAV	F0		3
CIB_PPSD	104		3
CIB_PROMO	B0	04	4
CIB_Q_DATA_TOKEN	D4		3
CIB_RSM	44		3
CIB_RSM_MACHINE	4C		4
CIB_RSM_MVE	37	08	5
CIB_RSM_MVR	37	02	5
CIB_RSM_POINT	48		4
CIB_RSM_SF	44		4
CIB_RTCC	EC		3
CIB_SDWA_PTR	FC		3
CIB_SDWA_SET	B2	40	4
CIB_SF0	B1	02	4
CIB_SGL	B0	02	4
CIB_SIGNO	100		3
CIB_SIZ	C		2
CIB_STATE	E8		3
CIB_STG	B2	80	4
CIB_SV1	CC		3
CIB_SV2	C8		3
CIB_TC_DONE	B1	01	4
CIB_TIU	B0	08	4
CIB_TOKE	E0		3
CIB_VER	E		2
CIB_VMA	90		2
CIB_VRPSA	9C		3
CIB_VSR	90		3
CIB_VSTOR	98		3

Figure 112. Condition Information Block Cross Reference (Part 2 of 2)

Appendix C. Machine State Block

Figure 113 shows a sample of the Machine State Block.

```
OFFSETS
  DEC    HEX   TYPE         LEN   NAME (DIM)         DESCRIPTION
  ---------------------------------------------------------------------------
   0     (0)   STRUCTURE    512   MCH                Lang Env Machine State
   0     (0)   CHARACTER      4    MCH_EYE           Eye Catcher
   4     (4)   SIGNED         2    MCH_SIZE          Size of area
   6     (6)   SIGNED         2    MCH_LEVEL         Level of generation
   8     (8)   CHARACTER     64    REG               GPR at interrupt
   8     (8)   SIGNED         4     GPR (0:15)       Individual regs
   72   (48)   CHARACTER      8    PSW               Basic or extended PSW at
                                                      time of interrupt
   80   (50)   SIGNED         4    INTI              EPIE Fields - ILC & code
   80   (50)   SIGNED         2     ILC              Extended PSW ILC
   82   (52)   SIGNED         2     IC               Extended PSW interrupt
   82   (52)   UNSIGNED       1      IC1             1st byte of Ext
                                                      PSW Int code
   83   (53)   UNSIGNED       1      IC2             2nd byte of Ext
                                                      PSW Int code
   84   (54)   ADDRESS        4    PFT               Page fault location
   88   (58)   CHARACTER     32    FLT               Float regs
   88   (58)   CHARACTER      8     FLT_0            Floating point reg 0
   96   (60)   CHARACTER      8     FLT_2            Floating point reg 2
  104   (68)   CHARACTER      8     FLT_4            Floating point reg 4
  112   (70)   CHARACTER      8     FLT_6            Floating point reg 6
  120   (78)   CHARACTER     59    RSV0              Reserved
  179   (B3)   BITSTRING      1    FLAGS             MCH flags
               .1.. ....           HR_VALID          HI regs saved in MCH
               1.11 1111           *                 Internal flags
  180   (B4)   CHARACTER     28    RSV1              Reserved
  208   (D0)   CHARACTER    104    AFP               Additional FP regs
  208   (D0)   CHARACTER      8     FLT_1            Floating point reg 1
  216   (D8)   CHARACTER      8     FLT_3            Floating point reg 3
  224   (E0)   CHARACTER      8     FLT_5            Floating point reg 5
  232   (E8)   CHARACTER      8     FLT_7            Floating point reg 7
```

Figure 113. Machine State Block (Part 1 of 2)

© Copyright IBM Corp. 1991, 2002

```
240   (F0)   CHARACTER      8     FLT_8            Floating point reg 8
248   (F8)   CHARACTER      8     FLT_9            Floating point reg 9
256   (100)  CHARACTER      8     FLT_10           Floating point reg 10
264   (108)  CHARACTER      8     FLT_11           Floating point reg 11
272   (110)  CHARACTER      8     FLT_12           Floating point reg 12
280   (118)  CHARACTER      8     FLT_13           Floating point reg 13
288   (120)  CHARACTER      8     FLT_14           Floating point reg 14
296   (128)  CHARACTER      8     FLT_15           Floating point reg 15
304   (130)  CHARACTER      4     FPC              FP control register
              1... ....            FPC_IMI          IEEE Invalid
                                                    operation mask
              .1.. ....            FPC_IMZ          IEEE Divide by
                                                    zero mask
              ..1. ....            FPC_IMO          IEEE Overflow mask
              ...1 ....            FPC_IMU          IEEE Underflow mask
              .... 1...            FPC_IMX          IEEE Inexact mask
              .... .111            FPC_RS0          Byte 0 reserved bits
305   (131)   1... ....            FPC_SFI          IEEE Invalid
                                                    operation flag
              .1.. ....            FPC_SFZ          IEEE Divide by
                                                    zero flag
              ..1. ....            FPC_SFO          IEEE Overflow flag
              ...1 ....            FPC_SFU          IEEE Underflow flag
              .... 1...            FPC_SFX          IEEE Inexact flag
              .... .111            FPC_RS1          Byte 1 reserved bits
306   (132)  BITSTRING      1      FPC_DXC          Data Exception Code
307   (133)   1111 11..            FPC_RS3          Byte 3 reserved bits
              .... ..11            FPC_RM           Rounding Mode
308   (134)  BITSTRING      1    _AFP_FLAGS         AFP flag byte
              1... ....           AFP_SAVED         FPRs 1,3,5,7,8-15
                                                    were saved in MCH
309   (135)  CHARACTER     11    RSV2               reserved
320   (140)  CHARACTER     64    REG_H              GPR-hi at interrupt
320   (140)  SIGNED         4     GPR_H (0:15)      Individual regs
384   (180)  CHARACTER    128    RSV3               reserved
```

Figure 113. Machine State Block (Part 2 of 2)

Figure 114 on page 655 shows the cross reference summary of the Machine State Block.

NAME	HEX OFFSET	HEX VALUE	LEVEL
MCH	0		1
_AFP_FLAGS	134		2
AFP_SAVED	134	80	3
APF	D0		2
FLAGS	B3		2
FLT	58		2
FLT_0	58		3
FLT_1	D0		3
FLT_10	100		3
FLT_11	108		3
FLT_12	110		3
FLT_13	118		3
FLT_14	120		3
FLT_15	128		3
FLT_2	60		3
FLT_3	D8		3
FLT_4	68		3
FLT_5	E0		3
FLT_6	70		3
FLT_7	E8		3
FLT_8	F0		3
FLT_9	F8		3
FPC	130		3
FPC_DXC	132		4
FPC_IMI	130	80	4
FPC_IMO	130	20	4
FPC_IMU	130	10	4
FPC_IMX	130	08	4
FPC_IMZ	130	40	4
FPC_RM	133	0X	4
FPC_RS0	130	0X	4
FPC_RS1	131	0X	4
FPC_RS3	133	XX	4
FPC_SFI	131	80	4
FPC_SFO	131	20	4
FPC_SFU	131	10	4
FPC_SFX	131	08	4
FPC_SFZ	131	40	4
GPR(0:15)	8		3
GPR_H(0:15)	140		3
HR_VALID	B3	40	3
IC	52		3
IC1	52		4
IC2	53		4
ILC	50		3
INTI	50		2

Figure 114. Machine State Block Cross Reference (Part 1 of 2)

MCH_EYE	0	2
MCH_LEVEL	6	2
MCH_SIZE	4	2
PFT	54	4
PSW	48	2
REG	8	2
REG_H	140	2
RSV0	78	2
RSV1	B4	2
RSV2	135	2
RSV3	180	2

Figure 114. Machine State Block Cross Reference (Part 2 of 2)

Appendix D. CALL Linkage Argument Examples

FASTLINK CALL Linkage Argument Examples

Notational shorthand used

In argument lists and diagrams below all arguments are direct, by-value arguments, and the notation is as follows:

```
l        denotes fixed bin (31)
d        denotes double precision float
dxu      denotes leftmost word of double precision (dxl-lower)
f        denotes single precision float
e        denotes extended precision float
s        denotes fixed bin(15)
c        denotes fixed bin(7) (or signed char in "C") which
         is passed right justified in a word
s2-l4-f2 denotes a structure with leaf elements fixed bin(15)
         fixed bin(31), fixed bin(31), and single precision
         within structures half words are aligned on half word boundaries
         and full word binary is aligned on word boundaries and space
         is skipped if necessary because of alignment requirements of
         previous structure members. This is not meant to imply any
         commonality in alignment or structure mapping rules across
         languages in Language Environment but is just used for purposes
         of illustration.
...      indicates where value would be placed if it must be represented
         in storage.
\\\      indicates sign extension for signed values and zero for unsigned
         ones
///      indicates structure padding (undefined contents)
```

Where all of the above denote by-value arguments.

Argument List Examples

All examples shown are for non-extended-mode enabled routines.

```
  Example 1A
    call Suba(l1,d,l2)

                        STORAGE MAPPING OF
 WILL BE PASSED IN:    ARG AREA ON THE STACK
                       ---------------------
  R1                 0 |        l1...      | P1
                       ---------------------
  FP0                4 |        du...      | P2
                       ---------------------
                     8 |        dl...      | P3
                       ---------------------
  STACK             12 |        l2         | P4
                       ---------------------
```

Note that the compiler does not initialize the related argument slots in the argument area of the stack, although they are still allocated in case the callee needs them. Only one word is used in the corresponding argument slot in the argument area.

© Copyright IBM Corp. 1991, 2002

Argument Examples

```
 Example 1B
   call Suba(d,l1,l2)

                        STORAGE MAPPING OF
WILL BE PASSED IN:    ARG AREA ON THE STACK
                      ---------------------
 FP0                0 |        du...      | P1
                      ---------------------
                    4 |        dl...      | P2
                      ---------------------
 GPR3               8 |        l1...      | P3
                      ---------------------
 STACK             12 |        l2         | P4
                      ---------------------

 Example 1C
   call Suba(&d,l1,&l2,&l3)

                        STORAGE MAPPING OF
WILL BE PASSED IN:    ARG AREA ON THE STACK
                      ---------------------
 GPR1               0 | address of d      | P1
                      ---------------------
 GPR2               4 |       l1          | P2
                      ---------------------
 GPR3               8 | address of l2     | P3
                      ---------------------
 STACK             12 | address of l3     | P4
                      ---------------------
```

This example illustrates passing of argument areas by reference parameters.

```
 Example 2
   call Suba(e,l)

                        STORAGE MAPPING OF
WILL BE PASSED IN:    ARG AREA ON THE STACK
                      ---------------------
 FP0/FP2            0 |        euu...     | P1
                      ---------------------
                    4 |        eul...     | P2
                      ---------------------
                    8 |        elu...     | P3
                      ---------------------
                   12 |        ell...     | P4
                      ---------------------
 STACK             16 |         l         | P5
                      ---------------------

 Example 3
   call Suba(d1,d2,l)

                        STORAGE MAPPING OF
WILL BE PASSED IN:    ARG AREA ON THE STACK
                      ---------------------
 FP0                0 |        d1u...     | P1
                      ---------------------
                    4 |        d1l...     | P2
                      ---------------------
 STACK              8 |        d2         | P3
                      |                   |
                   12 |                   | P4
                      ---------------------
 STACK             16 |         l         | P5
                      ---------------------
```

```
 Example 4
   call Suba(l1,l2,d1,d2,l3)

                        STORAGE MAPPING OF
WILL BE PASSED IN:    ARG AREA ON THE STACK
                      ---------------------
 R1                 0 |         l1...     | P1
                      ---------------------
 R2                 4 |         l2...     | P2
                      ---------------------
 FP0                8 |        d1u...     | P3
                      ---------------------
                   12 |        d1l...     | P4
                      ---------------------
 STACK             16 |        d2         | P5
                      |                   |
                   20 |                   | P6
                      ---------------------
 STACK             24 |        l3         | P7
                      ---------------------

 Example 5
   call Suba(s,l1,e,l2)

                        STORAGE MAPPING OF
WILL BE PASSED IN:    ARG AREA ON THE STACK
                      -----+----+----------
 R1                 0 |\\\\|\\\\|s...     |  P1
                      ---------------------
 R2                 4 |         l1...     |  P2
                      ---------------------
 FP0/FP2            8 |        euu...     |  P3
                      ---------------------
                   12 |        eul...     |  P4
                      ---------------------
                   16 |        elu...     |  P5
                      ---------------------
                   20 |        ell...     |  P6
                      ---------------------
 STACK             24 |         l2        |  P7
                      ---------------------
 Example 6
   call Subc (s1-l1-d1,l2,f2,d2)

                        STORAGE MAPPING OF
WILL BE PASSED IN:    ARG AREA ON THE STACK
                      ----------+----------
 R1                 0 |    s1   |////|////| <-- left justified or as dic-
                      ---------------------     ted by struc mapping
 R2                 4 |        l1...      | P2  rules in language
                      ---------------------
 R3                 8 |        d1u...     | P3
                      ---------------------
 STACK             12 |        d1l        | P4
                      ---------------------
 STACK             16 |        l2         | P5
                      ---------------------
 STACK             20 |        f2         | P6
                      ---------------------
 STACK             24 |        d2         | P8
                      |                   |
                   38 |                   | P9
                      ---------------------
```

Argument Examples

```
Example 7
   call Subb(l1, s1, l2, d1, f1, c1,s2,s3-l3-f2 )

                        STORAGE MAPPING OF
WILL BE PASSED IN:     ARG AREA ON THE STACK
                       ---------------------
 R1                  0 |        l1...      | P1
                       -----+----+----------
 R2                  4 |\\\\|\\\\|s1...    | P2
                       ---------------------
 R3                  8 |        l2...      | P3
                       ---------------------
 STACK              12 |        d1         | P4
                    16 |                   | P5
                       ---------------------
 STACK              20 |        f1         | P6
                       -----+----+----+-----
 STACK              24 |\\\\|\\\\|\\\\| c1 |
                       ---------------------
 STACK              28 |\\\\|\\\\|   s2    |
                       ---------------+-----
 STACK              32 |    s3   |////|////| <-- left justified or as dic-
                       ---------------------     tated by struct mapping
 STACK              36 |        l3         | P10 rules in language
                       --------------------|
 STACK              40 |        f2         | P11
                       ---------------------
```

Note that one can not pass single precision floating point to a language like C++, which, upon call, promotes all single precision value arguments to double precision, and get it to work reliably. The first floating argument might happen to work since it's in a register.

```
Example 8
  call Suba(f1,1,l2,f2)

                        STORAGE MAPPING OF
WILL BE PASSED IN:     ARG AREA ON THE STACK
                       ---------------------
 FP0                 0 |        f1...      | P1
                       ---------------------
 GPR2                4 |        l1...      | P2
                       ---------------------
 GPR3                8 |        l2...      | P3
                       ---------------------
 STACK              12 |        f2         | P4
                       ---------------------
```

Note that C++ on 390 always performs a promote of short floating values to long floating point. Thus in some cases C++ on 390 will not actually work as described above.

Function Results

The handling of result values is very symmetric to the way parameters are passed into the function. Values are loaded into the same registers. The only difference is that a structure/string return value which does not fit in the first three GPRs is returned not in the argument area but in an area passed by the caller as a hidden (first) parameter. In detail:

boolean (less or equal to 32 bits)	GPR1
integer byte, halfword, fullword	GPR1 (sign extended appropriately)
floating point short, long	FPR0
floating point extended	FPR0 and FPR2
complex short, long	FPR0 and FPR2
complex extended	FPR0 through FPR6
character (byte), halfword (Kanji)	GPR1
pointer	GPR1
first 3 words of structures/strings	GPR1 through GPR3

The same alignment rules are used as for arguments.

Otherwise the result will be returned in allocated storage whose address is passed as the first (hidden) argument. The caller must provide the required storage and pass its address as if it were the first argument. In FASTLINK this address, is always passed in GPR1, and one less GPR is available to pass user arguments. If the size of the return value is less than or equal to 3 words then the caller does not pass a hidden parameter for the return value. Structure return values longer than three words are passed partly in storage and partly in the GPRs following the same rules as for structure value arguments. Note that C++ does not return arrays but only a pointer to an array. The following illustrates the argument list layout when a function is invoked which returns a structure whose length is larger than 3 words.

```
A_Struct=Suba(f1,l1,l2,f2)

                        STORAGE MAPPING OF
 WILL BE PASSED IN:    ARG AREA ON THE STACK
                       ---------------------
  GPR1               0 |    @A_Struct...   | Address where function returns value
                       --------------------
  FP0                4 |        f1...      | P1
                       --------------------
  GPR3               8 |        l1...      | P2
                       --------------------
  STACK             12 |        l2         | P3
                       --------------------
  STACK             16 |        f2         | P4
                       ---------------------
```

FASTLINK passes more return values in registers than does C Linkage. In these cases the simulated Code epilog may have to relocate values from registers to storage.

XPLINK CALL Linkage Argument Examples

The following example shows ″by reference″ parameters. Note that ″Parameter Adjust″ is always zero in this case and that arguments are never passed in floating point registers. The value of the high-order bit on the last, or any, reference parameter is not defined here; this is left to the implementation, possibly specified by language constructs such as #pragma in C.

Prototype:	f0(	int&,	float&,	double&,	struct { /*... */ }&,	int&)	
Offset in argument list		+0	+4	+8	+12	+16	
Stored in argument list		No	No	No	Yes	Yes	
Passed in Registers		GPR1	GPR2	GPR3			
Parameter Adjust		000000/000000/000000/000000					

The remaining examples show ″by value″ semantics in parameter lists. ″Parameter Adjust″ is zero except where shown.

Prototype:	f1(	int,	int,	int,	int,	int)	
Offset in argument list		+0	+4	+8	+12	+16	
Stored in argument list		No	No	No	Yes	Yes	
Passed in Registers		GPR1	GPR2	GPR3			

Prototype:	f2(	char,	short,	int,	long long)		
Offset in argument list		+0	+4	+8	+12		
Stored in argument list		No	No	No	Yes		
Passed in Registers		GPR1	GPR2	GPR3			

Prototype:	f3(	long long,	int,	int)			
Offset in argument list		+0	+8	+12			
Stored in argument list		No	No	Yes			
Passed in Registers		GPR1/ GPR2	GPR3				

Prototype:	f4(	struct {int,	int },	int,	int)		
Offset in argument list		+0	+4	+8	+12		
Stored in argument list		No	No	No	Yes		
Passed in Registers		GPR1	GPR2	GPR3			

Prototype:	f5(	struct {float,	double },	int,	int)		
Offset in argument list		+0	+8	+16	+20		
Stored in argument list		No	No	Yes	Yes		
Passed in Registers		GPR1	GPR3				

Prototype:	f6(	struct {double,	float },	int,	int)		
Offset in argument list		+0	+8	+16	+20		
Stored in argument list		No	No	Yes	Yes		
Passed in Registers		GPR1/2	GPR3				

Prototype:	f7(	double,	long double,	double)			
Offset in argument list		+0	+8	+24			
Stored in argument list		No	No	Yes			
Passed in Registers		FPR0	FPR4/6				
Parameter Adjust		100000/000000/100000/100000					

Prototype:	f8(	int,	long double,	int,	double,	int,	double)
Offset in argument list		+0	+4	+20	+24	+32	+36
Stored in argument list		No	No	Yes	No	Yes	No
Passed in Registers		GPR1	FPR0/2		FPR4		FPR6
Parameter Adjust		100001/100000/100001/100001					

Prototype:	f9(	double,	double,	double,	long double)		
Offset in argument list		+0	+8	+16	+24		
Stored in argument list		No	No	No	Yes		
Passed in Registers		FPR0	FPR2	FPR4			
Parameter Adjust		100000/100000/100000/000000					

Argument Examples

Prototype:	f10(	double,	double,	double)			
Offset in argument list		+0	+8	+16			
Stored in argument list		No	No	No			
Passed in Registers		FPR0	FPR2	FPR4			
Parameter Adjust		100000/100000/100000/000000					

Prototype:	f11(	double,	double,	double,	struct { double,	double})	
Offset in argument list		+0	+8	+16	+24	+32	
Stored in argument list		No	No	No	No	Yes	
Passed in Registers		FPR0	FPR2	FPR4	FPR6		
Parameter Adjust		100000/100000/100000/100000					

Prototype:	f12(	int,	double,	...)			
Actual Parameters				int	double		
Offset in argument list		+0	+4	+12	+16		
Stored in argument list		No	No	Yes	Yes		
Passed in Registers		GPR1	FPR0				
Parameter Adjust		100001/000000/000000/000000					

Prototype:	f13(	double,	...)				
Actual Parameters			double				
Offset in argument list		+0	+8	+12			
Stored in argument list		No	Yes	Yes			
Passed in Registers		FPR0	GPR3				
Parameter Adjust		100000/000000/000000/000000					

The following two figures show how a C/C++ structure containing two doubles is used to mimic the native COMPLEX(16) type in PLI (shown here passed by value):

Prototype:	f14(	double	struct { double,	double})			
Offset in argument list		+0	+8	+16			
Stored in argument list		No	No	No			
Passed in Registers		FPR0	FPR2	FPR4			
Parameter Adjust		100000/100000/100000/000000					

Prototype:	DCL F15 ENTRY(	FLOAT (16)	COMPLEX (16)				
Offset in argument list		+0	+8	+24			
Stored in argument list		No	No	No			
Passed in Registers		FPR0	FPR2	FPR4			
Parameter Adjust		100000/100000/100000/000000					

The following two figures show how a C/C++ structure containing two long doubles is used to mimic the native COMPLEX(33) type in PLI:

Prototype:	f16(	double,	struct { long double,	long double})			
Offset in argument list		+0	+8	+24			
Stored in argument list		No	No	Yes			
Passed in Registers		FPR0	FPR4/6				
Parameter Adjust		100000/000000/100000/100000					

Prototype:	DCL F17 ENTRY(	FLOAT (16)	COMPLEX (33)				
Offset in argument list		+0	+8	+24			
Stored in argument list		No	No	Yes			
Passed in Registers		FPR0	FPR4/6				
Parameter Adjust		100000/000000/100000/100000					

The following figures show how unprototyped calls match the conventions expected by both vararg and non-vararg functions:

Prototype:	(none)						
Actual Parameters		int	int	double			
Offset in argument list		+0	+4	+8	+12		
Stored in argument list		No	No	Yes	Yes		
Passed in Registers		GPR1	GPR2	GPR3			
				FPR0			
Parameter Adjust		(none)					

Prototype:	f18(	int,	...)				
Actual Parameters			int	double			
Offset in argument list		+0	+4	+8	+12		
Stored in argument list		No	No	Yes	Yes		
Passed in Registers		GPR1	GPR2	GPR3			

Argument Examples

Prototype:	f19(	int,	int,	double)			
Offset in argument list		+0	+4	+8			
Stored in argument list		No	No	No			
Passed in Registers		GPR1	GPR2	FPR0			
Parameter Adjust		100010/000000/000000/000000					

Prototype:	(none)					
Actual Parameters		int	int	double		float (IEEE)	
Offset in argument list		+0	+4	+8	+12	+16	
Stored in argument list		No	No	Yes	Yes	Yes	
Passed in Registers		GPR1	GPR2	GPR3		FPR2	
				FPR0			
Parameter Adjust		(none)					

Prototype:	f20(	int,	...)				
Actual Parameters			int	double		float (IEEE)	
Offset in argument list		+0	+4	+8	+12	+16	
Stored in argument list		No	No	Yes	Yes	Yes	
Passed in Registers		GPR1	GPR2	GPR3			

Prototype:	f21(	int,	int,	double,	float (IEEE))		
Offset in argument list		+0	+4	+8	+16		
Stored in argument list		No	No	No	No		
Passed in Registers		GPR1	GPR2	FPR0	FPR2		
Parameter Adjust		100010/010000/000000/000000					

Prototype:	(none)						
Actual Parameters		int	float (IEEE)	double		long double	
Offset in argument list		+0	+4	+8	+12	+16	
Stored in argument list		No	No	Yes	Yes	Yes	
Passed in Registers		GPR1	GPR2	GPR3		FPR4 FPR6	
			FPR0	FPR0			
Parameter Adjust		(none)					

Prototype:	f22(	int,	...)				
Actual Parameters			float (IEEE)	double		long double	
Offset in argument list		+0	+4	+8	+12	+16	
Stored in argument list		No	No	Yes	Yes	Yes	
Passed in Registers		GPR1	GPR2	GPR3			

Prototype:	f23(	int,	float (IEEE),	double,	long double)		
Offset in argument list		+0	+4	+8	+16		
Stored in argument list		No	No	No	No		
Passed in Registers		GPR1	FPR0	FPR2	FPR4 FPR6		
Parameter Adjust		010001/100000/100000/100000					

Prototype:	(none)						
Actual Parameters		int	float (Hex)	int	long double		
Offset in argument list		+0	+4	+12	+16		
Stored in argument list		No	No	Yes	Yes		
Passed in Registers		GPR1	GPR2/3 FPR0		FPR4 FPR6		
Parameter Adjust		(none)					

Prototype:	f24(	int,	float (Hex),	int,	long double)		
Offset in argument list		+0	+4	+12	+16		
Stored in argument list		No	No	Yes	No		
Passed in Registers		GPR1	FPR0		FPR4 FPR6		
Parameter Adjust		100001/000000/100001/100000					

Prototype:	(none)						
Actual Parameters		int	float (IEEE)	int	long double		
Offset in argument list		+0	+4	+8	+12		
Stored in argument list		No	No	No	Yes		
Passed in Registers		GPR1	GPR2 FPR0	GPR3	FPR4 FPR6		
Parameter Adjust		(none)					

Argument Examples

Prototype:	f25(	int,	float (IEEE),	...)			
Actual Parameters				int	long double		
Offset in argument list		+0	+4	+8	+12		
Stored in argument list		No	No	No	Yes		
Passed in Registers		GPR1	FPR0	GPR3			

Prototype:	f26(	int,	float (IEEE),	int,	long double)		
Offset in argument list		+0	+4	+8	+12		
Stored in argument list		No	No	No	No		
Passed in Registers		GPR1	FPR0	GPR3	FPR4 FPR6		
Parameter Adjust		010001/000000/100001/100000					

Prototype:	f27(	int,	float (Hex),	...)			
Actual Parameters				int	long double		
Offset in argument list		+0	+4	+12	+16		
Stored in argument list		No	No	Yes	Yes		
Passed in Registers		GPR1	FPR0				

Appendix E. Accessibility

Accessibility features help a user who has a physical disability, such as restricted mobility or limited vision, to use software products successfully. The major accessibility features in z/OS enable users to:

- Use assistive technologies such as screen-readers and screen magnifier software
- Operate specific or equivalent features using only the keyboard
- Customize display attributes such as color, contrast, and font size

Using assistive technologies

Assistive technology products, such as screen-readers, function with the user interfaces found in z/OS. Consult the assistive technology documentation for specific information when using it to access z/OS interfaces.

Keyboard navigation of the user interface

Users can access z/OS user interfaces using TSO/E or ISPF. Refer to *z/OS TSO/E Primer*, *z/OS TSO/E User's Guide*, and *z/OS ISPF User's Guide Volume I* for information about accessing TSO/E and ISPF interfaces. These guides describe how to use TSO/E and ISPF, including the use of keyboard shortcuts or function keys (PF keys). Each guide includes the default settings for the PF keys and explains how to modify their functions.

© Copyright IBM Corp. 1991, 2002

Notices

This information was developed for products and services offered in the U.S.A.

IBM may not offer the products, services, or features discussed in this document in other countries. Consult your local IBM representative for information on the products and services currently available in your area. Any reference to an IBM product, program, or service is not intended to state or imply that only that IBM product, program, or service may be used. Any functionally equivalent product, program, or service that does not infringe any IBM intellectual property right may be used instead. However, it is the user's responsibility to evaluate and verify the operation of any non-IBM product, program, or service.

IBM may have patents or pending patent applications covering subject matter described in this document. The furnishing of this document does not give you any license to these patents. You can send license inquiries, in writing, to:

IBM Director of Licensing
IBM Corporation
North Castle Drive
Armonk, NY 10504-1785
USA

For license inquiries regarding double-byte (DBCS) information, contact the IBM Intellectual Property Department in your country or send inquiries, in writing, to:

IBM World Trade Asia Corporation
Licensing
2-31 Roppongi 3-chome, Minato-ku
Tokyo 106, Japan

The following paragraph does not apply to the United Kingdom or any other country where such provisions are inconsistent with local law:
INTERNATIONAL BUSINESS MACHINES CORPORATION PROVIDES THIS PUBLICATION "AS IS" WITHOUT WARRANTY OF ANY KIND, EITHER EXPRESS OR IMPLIED, INCLUDING, BUT NOT LIMITED TO, THE IMPLIED WARRANTIES OF NON-INFRINGEMENT, MERCHANTABILITY OR FITNESS FOR A PARTICULAR PURPOSE. Some states do not allow disclaimer of express or implied warranties in certain transactions, therefore, this statement may not apply to you.

This information could include technical inaccuracies or typographical errors. Changes are periodically made to the information herein; these changes will be incorporated in new editions of the publication. IBM may make improvements and/or changes in the product(s) and/or the program(s) described in this publication at any time without notice.

Any references in this information to non-IBM Web sites are provided for convenience only and do not in any manner serve as an endorsement of those Web sites. The materials at those Web sites are not part of the materials for this IBM product and use of those Web sites is at your own risk.

IBM may use or distribute any of the information you supply in any way it believes appropriate without incurring any obligation to you.

© Copyright IBM Corp. 1991, 2002

Licensees of this program who wish to have information about it for the purpose of enabling: (i) the exchange of information between independently created programs and other programs (including this one) and (ii) the mutual use of the information which has been exchanged, should contact:

IBM Corporation
Mail Station P300
2455 South Road
Poughkeepsie, NY 12601-5400
USA

Such information may be available, subject to appropriate terms and conditions, including in some cases, payment of a fee.

The licensed program described in this information and all licensed material available for it are provided by IBM under terms of the IBM Customer Agreement, IBM International Program License Agreement, or any equivalent agreement between us.

Any performance data contained herein was determined in a controlled environment. Therefore, the results obtained in other operating environments may vary significantly. Some measurements may have been made on development-level systems and there is no guarantee that these measurements will be the same on generally available systems. Furthermore, some measurement may have been estimated through extrapolation. Actual results may vary. Users of this document should verify the applicable data for their specific environment.

Information concerning non-IBM products was obtained from the suppliers of those products, their published announcements or other publicly available sources. IBM has not tested those products and cannot confirm the accuracy of performance compatibility or any other claims related to non-IBM products. Questions on the capabilities of non-IBM products should be addressed to the suppliers of those products.

All statements regarding IBM's future direction or intent are subject to change without notice, and represent goals and objectives only.

This information contains examples of data and reports used in daily business operations. To illustrate them as completely as possible, the examples include the names of individuals, companies, brands, and products. All of these names are fictitious and any similarity to the names and addresses used by an actual business enterprise is entirely coincidental.

COPYRIGHT LICENSE:

This information contains sample application programs in source language, which illustrates programming techniques on various operating platforms. You may copy, modify, and distribute these sample programs in any form without payment to IBM, for the purposes of developing, using, marketing or distributing application programs conforming to the application programming interface for the operating platform for which the sample programs are written. These examples have not been thoroughly tested under all conditions. IBM, therefore, cannot guarantee or imply reliability, serviceability, or function of these programs. You may copy, modify, and distribute these sample programs in any form without payment to IBM for the purposes of developing, using, marketing, or distributing application programs conforming to IBM's application programming interfaces.

If you are viewing this information softcopy, the photographs and color illustrations may not appear.

Programming Interface Information

This document describes intended Programming Interfaces that allow the customer to write programs to obtain the services of Language Environment in z/OS.

It is to be expected that programs written using this technical information, because of their dependencies on the detailed design and implementation of Language Environment, might need to be changed in order to run with new Language Environment product releases or versions, or as a result of maintenance.

Trademarks

The following terms are trademarks of the IBM Corporation in the United States or other countries or both:

AD/Cycle	IBMLink	S/370
C/370	IMS	S/390
CICS	IMS/ESA	SAA
CICS/ESA	Language Environment	System/360
CICS/MVS	MVS	System/370
CICS/VM	MVS/ESA	VisualAge
COBOL/370	Open Class	VM/ESA
DB2	OpenEdition	z/Architecture
DFSMS/MVS	OS/390	z/OS
DFSORT	QMF	z/OS.e
IBM	Resource Link	zSeries

IEEE is a trademark of the Institute of Electrical and Electronics Engineers, Inc. in the United States and other countries.

Java and all Java-based trademarks and logos are trademarks of Sun Microsystems, Inc. in the United States and other countries.

UNIX is a registered trademark of The Open Group in the United States and other countries.

Other company, product, and service names may be trademarks or service marks of others.

Bibliography

This section lists the books in the Language Environment library and other publications that may be helpful when using Language Environment.

Language Products Publications

z/OS Language Environment

- *z/OS Language Environment Concepts Guide*, SA22-7567
- *z/OS Language Environment Programming Guide*, SA22-7561
- *z/OS Language Environment Programming Reference*, SA22-7562
- *z/OS Language Environment Customization*, SA22-7564
- *z/OS Language Environment Debugging Guide*, GA22-7560
- *z/OS Language Environment Run-Time Migration Guide*, GA22-7565
- *z/OS Language Environment Writing Interlanguage Communication Applications*, SA22-7563
- *z/OS Language Environment Run-Time Messages*, SA22-7566
- *z/OS Language Environment Vendor Interfaces*, SA22-7568

z/OS C/C++

- *C/C++ Language Reference*, SC09-4815
- *z/OS C/C++ Compiler and Run-Time Migration Guide*, GC09-4913
- *z/OS C/C++ Programming Guide*, SC09-4765
- *z/OS C/C++ User's Guide*, SC09-4767
- *z/OS C/C++ Run-Time Library Reference*, SA22-7821
- *z/OS C/C++ Messages*, GC09-4819
- *IBM Open Class Library User's Guide*, SC09-4811
- *IBM Open Class Library Reference, Vol. 1*, SC09-4812
- *IBM Open Class Library Reference, Vol. 2*, SC09-4813
- *IBM Open Class Library Reference, Vol. 3*, SC09-4814

Enterprise COBOL for z/OS and OS/390

- *Enterprise COBOL for z/OS and OS/390 Licensed Program Specifications*, GC27-1410
- *Enterprise COBOL for z/OS and OS/390 Customization*, GC27-1410
- *Enterprise COBOL for z/OS and OS/390 Language Reference*, SC27-1408
- *Enterprise COBOL for z/OS and OS/390 Programming Guide*, SC27-1412
- *Enterprise COBOL for z/OS and OS/390 Migration Guide*, GC27-1409

COBOL for OS/390 & VM

- *COBOL for OS/390 & VM Licensed Program Specifications*, GC26-9044
- *COBOL for OS/390 & VM Customization under OS/390*, GC26-9045
- *COBOL for OS/390 & VM Language Reference*, SC26-9046
- *COBOL for OS/390 & VM Programming Guide*, SC26-9049
- *COBOL for OS/390 & VM Compiler and Run-Time Migration Guide*, GC26-4764

COBOL for MVS & VM (Release 2)

- *Licensed Program Specifications*, GC26-4761
- *Programming Guide*, SC26-4767
- *Language Reference*, SC26-4769
- *Compiler and Run-Time Migration Guide*, GC26-4764
- *Installation and Customization under MVS*, SC26-4766
- *Reference Summary*, SX26-3788
- *Diagnosis Guide*, SC26-3138

© Copyright IBM Corp. 1991, 2002

VS COBOL II

VS COBOL II Application Programming Guide for MVS and CMS, SC26-4045

Debug Tool

- *Debug Tool User's Guide and Reference*, SC09-2137

VS FORTRAN Version 2

- *Language Environment Fortran Run-Time Migration Guide*, SC26-8499
- *Language and Library Reference*, SC26-4221
- *Programming Guide for CMS and MVS*, SC26-4222

Enterprise PL/I for z/OS and OS/390, V3R1

- *Enterprise PL/I for z/OS and OS/390 Licensed Program Specifications*, GC27-1456
- *Enterprise PL/I for z/OS and OS/390 Programming Guide*, SC27-1457
- *Enterprise PL/I for z/OS and OS/390 Language Reference*, SC27-1460
- *Enterprise PL/I for z/OS and OS/390 Migration Guide*, GC27-1458
- *Enterprise PL/I for z/OS and OS/390 Messages and Codes*, SC27-1461
- *Enterprise PL/I for z/OS and OS/390 Diagnosis Guide*, SC27-1459

VisualAge PL/I

- *VisualAge PL/I for OS/390 Licensed Program Specifications*, GC26-9471
- *VisualAge PL/I for OS/390 Programming Guide*, SC26-9473
- *VisualAge PL/I Language Reference*, SC26-9476
- *VisualAge PL/I for OS/390 Compiler and Run-Time Migration Guide*, SC26-9474
- *VisualAge PL/I Messages and Codes*, SC26-9478
- *VisualAge PL/I for OS/390 Diagnosis Guide*, SC26-9475

PL/I for MVS & VM

- *PL/I for MVS & VM Licensed Program Specifications*, GC26-3116
- *PL/I for MVS & VM Programming Guide*, SC26-3113
- *PL/I for MVS & VM Language Reference*, SC26-3114
- *PL/I for MVS & VM Reference Summary*, SX26-3821
- *PL/I for MVS & VM Compiler and Run-Time Migration Guide*, SC26-3118
- *PL/I for MVS & VM Installation and Customization under MVS*, SC26-3119
- *PL/I for MVS & VM Compile-Time Messages and Codes*, SC26-3229
- *PL/I for MVS & VM Diagnosis Guide*, SC26-3149

High Level Assembler for MVS & VM

- *Programmer's Guide, MVS & VM Edition*, SC26-4941

Related Publications

CICS

- *CICS Transaction Server for OS/390 Installation Guide*, GC34-5985
- *CICS Operations and Utilities Guide*, SC34-5991
- *CICS Problem Determination Guide*, GC34-6002
- *CICS Resource Definition Guide*, SC34-5990
- *CICS Data Areas*, LY33-6100
- *CICS Application Programming Guide*, SC34-5993
- *CICS Application Programming Reference*, SC34-5994
- *CICS System Definition Guide*, SC34-5988

DB2

Database 2 Application Programming and SQL Guide, SC26-4377

DFSMS/MVS

z/OS DFSMS Program Management, SC27-1130
z/OS DFSMS DFM Guide and Reference, SC26-7395

IPCS

- *z/OS MVS IPCS User's Guide*, SA22-7596
- *z/OS MVS IPCS Commands*, SA22-7594
- *z/OS MVS IPCS Customization*, SA22-7595

DFSORT

DFSORT Application Programming Guide R14, SC33-4035

IMS/ESA

IMS/ESA Application Programming: Design Guide, SC26-8728
IMS/ESA Application Programming: Database Manager, SC26-8727
IMS/ESA Application Programming: Transaction Manager, SC26-8729
IMS/ESA Application Programming: EXEC DLI Commands for CICS and IMS, SC26-8726

msys for Setup

- *z/OS Managed System Infrastructure for Setup User's Guide*, SC33-7985

z/OS

- *z/OS Introduction and Release Guide*, GA22-7502
- *z/OS Program Directory*, GI10-0670
- *z/OS and z/OS.e Planning for Installation*, GA22-7504
- *z/OS Information Roadmap*, SA22-7500
- *z/OS Hot Topics Newsletter*, GA22-7501
- *z/OS Licensed Program Specifications*, GA22-7503
-
- *z/OS ISPF Dialog Tag Language Guide and Reference*, SC34-4824
- *z/OS ISPF Planning and Customizing*, GC34-4814
- *z/OS ISPF Dialog Developer's Guide and Reference*, SC34-4821
-
- *z/OS UNIX System Services User's Guide*, SA22-7801
- *z/OS UNIX System Services Command Reference*, SA22-7802
- *z/OS UNIX System Services Programming: Assembler Callable Services Reference*, SA22-7803
- *z/OS UNIX System Services Planning*, GA22-7800
-
- *z/OS TSO/E Customization*, SA22-7783
- *z/OS TSO/E Programming Services*, SA22-7789
- *z/OS TSO/E System Programming Command Reference*, SA22-7793

z/OS.e

- *z/OS.e Overview*, GA22-7869
- *z/OS.e Licensed Program Specifications*, GA22-7503

Softcopy Publications

z/OS Collection, SK3T-4269

Index

Special characters

__ae_autoconvert_state() 239
__ae_thread_setmode() 237
__ae_thread_swapmode() 238
__alcaxp() 209
__bldxfd() 307
__chkbfp() 576
__cttbl() 235
__dsa_prev() 257
__ep_find () 27
__fnwsa() 313
__fp_btoh() 576
__fp_cast() 577
__fp_htob() 578
__fp_level() 579
__fp_read_rnd() 579
__fp_setmode() 580
__fp_swap_rnd() 582
__fp_swapmode() 581
__fpc_rd() 583
__fpc_rs() 584
__fpc_rw() 584
__fpc_sm() 585
__fpc_wr() 586
__isASCII() 239
__isBFP() 586
__stack_info() 213

A

abend shunt routine 263
abend summary 171
abends 267
access register
  conventions 3
accessibility 669
add new members to enclave CWI 153
ADDRESS 589
AMODE 2
anchor
  See CAA
anchor considerations 441
anchor lookup, CEEARLU 440
anchor support 439
argument examples 657
argument/parameter list architecture 81
  access modes 81
  argument passing semantics 81
ASCII
  character mode
    determine 239
    set 237
    swap 238
ASCII/EBCDIC 235
atterm event 464
automatic destructor event 491

B

BDI (block debug information) 9
binary floating-point (see IEEE floating-point) 575
BITSTRING 589
block debug information 9
bootstrap routine, member 160

C

C/C++ special purpose interfaces for IEEE
  floating-point 575
C/C++-specific vendor interfaces 235
  __ae_autoconvert_state() 239
  __ae_thread_setmode() 237
  __ae_thread_swapmode() 238
  __cttbl() 235
  __isASCII() 239
CAA (common anchor area)
  constants 39
  cross reference 40
  field descriptions 32
  format of 32
CALL
  conventions 81
  FASTLINK linkage 92
  linkages 81
  standard linkage 82
  XPLINK linkage 104
CALL linkage argument examples 657
CALL or function invocation
  argument/parameter list 81
    access modes 81
    argument passing semantics 81
callable services
  CEE3DMP 373
  CEE3ERP 241
  CEE3RSUM 242
  CEE3SGLN 245
  CEE3SGLT 246
  CEE3SMO 234
  CEEBDMP 385
  CEEHDMP 384
  CEELDMP 380
  CEEMRCM 255
  CEETDLI 438
  CEEVDMP 381
  CEEYDSAF 256
  change the MSGFILE ddname 230
  conversion services 358
  dump services 371
  dynamic storage services 193
  interactive debug services 315
  math services 339
  PLIST manipulation CWI 163
  program mask 3
  register content
    at entry 2

© Copyright IBM Corp. 1991, 2002

callable services *(continued)*
register content *(continued)*
at exit 2
user-created services 202
vendor heap manager interface 205
XPLINK Compatibility Stack Swapping Services 210
XPLINK DSA Extension Services 208
calling the preinitialization environment in SRB mode 189
cancel load module event 490
cancel/release load module CWI 147
case 221
CDI (compile debug information) 9
CEE3ADDM 153
CEE3CBTS 316
CEE3CDO 387
CEE3CRE 155
CEE3CSYS 158
CEE3DDBC 163
CEE3DMP 373
CEE3ERP 241
CEE3MBR 160
CEE3PLST 163
CEE3RSUM 242
CEE3SGLN 245
CEE3SGLT 246
CEE3SMO 234
CEE3SMS 247
CEE3SRT 335
CEEARLU 440
CEEATTRM 168
CEEBCRLM 147
CEEBDMP 385
CEEBENV CWI 567
CEEBETBL CSECT 139
CEEBFBC 320
CEEBLLST CSECT 141
CEEBSENM 148
CEEBSHL 174
CEEBSIOP 138
CEEBSRCM 149
CEECAAGETS 83
CEECCICS 407, 410, 411, 417, 418, 419, 423, 424, 427, 432, 434, 436
CEECHMF 230
CEECIB 264, 647
CEECLOS 227
CEECMIB 232
CEECOPP 171
CEECTCB 435
CEECTOK 218
CEEEVDBG entry point 323
CEEEVPRF entry point 331
CEEFMAIN 136
CEEGETFB 222
CEEGIN 164
CEEGOTO 249
CEEHDHDL 254
CEEHDMP 384
CEEINT 129, 145, 147
CEEINT interface 145
CEEKCTRC 394
CEEKSNP 388
CEELDMP 380
CEEMAIN 136
CEEMCH 653
CEEMFNDM 232
CEEMRCM 255
CEEODMF 227
CEEOEXEC 557
CEEOEXIT 565
CEEOFORK 559
CEEOKILL() 506
CEEOPAD 494
CEEOPAGD 494
CEEOPAGS 495
CEEOPAGW 496
CEEOPAI 493
CEEOPASD 496
CEEOPASS 497
CEEOPASW 498
CEEOPC 499
CEEOPCAN 511
CEEOPCB 543
CEEOPCD 544
CEEOPCI 546
CEEOPCPO 512
CEEOPCPU 513
CEEOPCS 547
CEEOPCT 548
CEEOPCW 551
CEEOPD 501
CEEOPDD 552
CEEOPDG 553
CEEOPDI 555
CEEOPDS 556
CEEOPE 502
CEEOPEQ 502
CEEOPGS 508
CEEOPJ 503
CEEOPKC 509
CEEOPMD 516
CEEOPMF 228
CEEOPMI 518
CEEOPML 520
CEEOPML2 522
CEEOPMT 522
CEEOPMU 524
CEEOPMU2 525
CEEOPO 504
CEEOPRL 526
CEEOPRL2 528
CEEOPRT 528
CEEOPRU 530
CEEOPRU2 531
CEEOPS 505
CEEOPSI 514
CEEOPSS 510
CEEOPTI 515
CEEOPWL 532
CEEOPWL2 533

CEEOPWT 534
CEEOPXD 535
CEEOPXG 537
CEEOPXI 539
CEEOPXS 541
CEEOPY 515
CEEOSPWN 561
CEEOXEXE 565
CEEPCB_DELETE 280
CEEPCB_LOAD 281
CEEPCB_ZFREEST 196
CEEPCB_ZGETST 195
CEEPDEL 277
CEEPDEL2 277
CEEPDELT 283
CEEPFDE 299
CEEPFWSA 312
CEEPGFD 151
CEEPIPI 186
CEEPLDE 297
CEEPLOD 273
CEEPLOD2 274
CEEPLODT 282
CEEPLVE 291
CEEPLVI 290
CEEPLVT 292
CEEPPOS 293
CEEPQDF 300
CEEPQDV 301
CEEPQLD 279
CEEPRFD 152
CEEQDMF 229
CEEQFBC 318
CEEQLOD 315
CEEQUMF 229
CEERCB_ZFREEST 198
CEERCB_ZGETST 197
CEERELU 165
CEESDMP 373
CEESNAP 390
CEESTART 130
CEETBCK 376
CEETDLI 438
CEETGCAA 322
CEETGTFN 311
CEETHLOC 305
CEETLOC 303
CEETLOR 309
CEETRCB 374
CEETREC 166
CEETREN 167
CEETSFB 321
CEETSFC 319
CEEUOPT 171
CEEURTB 390
CEEV#FRS 200
CEEV#GTS 200
CEEVDMP 381
CEEVGTSB 198
CEEVGTUN 88
CEEVH2OS 212
CEEVHRPT 201
CEEVnnn 564
CEEVROND 210
CEEVRONU 211
CEEVSSEG 89
CEEVUHCR 202
CEEVUHFR 204
CEEVUHGT 203
CEEVUHRP 204
CEEVXPAL 208
CEEXETBL macro 139
CEEXVSEL macro 177
CEEYCVHE 359
CEEYCVHF 361
CEEYCVHI 366
CEEYDSAF 256
CEEYEPAF 25
CEEYPPAF 28
CEEZDEL 271
CEEZDELR 272
CEEZLOD 270
CEEZLODR 271
central control blocks, member language 444
CHARACTER 589
CIB (condition information block) 647
CICS
  background information 397
  extended run-time language interface 403
  languages supported 402
  running an application program under CICS 399
  terminology 397
  thread initialization 417
  thread termination 418
cleanup routine processing 249
clearenv() 566
close ddname 227
COBOL
  call/cancel routine 571
  library load/delete exit 569
COBOL-specific vendor interfaces 569
command
  syntax diagrams xv
command line equivalent event 483
common anchor area 439
  See CAA
common naming conventions 2
compilation units 1
compile debug information
  See CDI
Component Broker Connector (CBC) 316
condition handling 241
  math service library 339
    condition code definitions 353
condition information block 264, 647
  See CEECIB
condition manager 241
  abends 267
  interfaces
    to shunt routine 262, 263
condition representation
  model 217

condition representation *(continued)*
objectives 217
Condition_ID
Case 1 219
case 2 220
control 221
control block dump service 385
conventions
access register 3
CALL linkage 81
FASTLINK linkage 92
floating-point register 3
HLL condition handling 266
Language Environment service 1
program mask 3
standard linkage 82
XPLINK linkage 104
conversion services 358, 359, 361, 366
terminology 358
COUNTRY
description of 225
country code
country code change event 463
country code change event 463
created enclaves
CEE3CRE 155
creating a new enclave 155
creating nested encalves CWI 158
CWI (compiler-writer interface)
__alcaxp() 209
__bldxfd() 307
__dsa_prev() 257
__fnwsa() 313
__stack_info 213
CEE3ADDM 153
CEE3CBTS 316
CEE3CDO 387
CEE3CRE 155
CEE3CSYS 158
CEE3DDBC 163
CEE3ERP 241
CEE3MBR 160
CEE3PLST 163
CEE3RSUM 242
CEE3SGLN 245
CEE3SGLT 246
CEE3SMS 247
CEE3SRT 335
CEEARLU 440
CEEATTRM 168
CEEBCRLM 147
CEEBDMP 385
CEEBENV 567
CEEBFBC 320
CEEBSENM 148
CEEBSHL 174
CEEBSIOP 138
CEEBSRCM 149
CEECHMF 230
CEECLOS 227
CEECMIB 232
CWI (compiler-writer interface) *(continued)*
CEECOPP 171
CEECTCB 435
CEEGETFB 222
CEEGIN 164
CEEGOTO 249
CEEHDHDL 254
CEEHDMP 384
CEEINT 129
CEEKCTRC 394
CEEKSNP 388
CEELDMP 380
CEEMFNDM 232
CEEMRCM 255
CEEODMF 227
CEEOEXEC 557
CEEOEXIT 565
CEEOFORK 559
CEEOKILL() 506
CEEOPAD 494
CEEOPAGD 494
CEEOPAGS 495
CEEOPAGW 496
CEEOPAI 493
CEEOPASD 496
CEEOPASS 497
CEEOPASW 498
CEEOPC 499
CEEOPCAN 511
CEEOPCB 543
CEEOPCD 544
CEEOPCI 546
CEEOPCPO 512
CEEOPCPU 513
CEEOPCS 547
CEEOPCT 548
CEEOPCW 551
CEEOPD 501
CEEOPDD 552
CEEOPDG 553
CEEOPDI 555
CEEOPDS 556
CEEOPE 502
CEEOPEQ 502
CEEOPGS 508
CEEOPJ 503
CEEOPKC 509
CEEOPMD 516
CEEOPMF 228
CEEOPMI 518
CEEOPML 520
CEEOPML2 522
CEEOPMT 522
CEEOPMU 524
CEEOPMU2 525
CEEOPO 504
CEEOPRL 526
CEEOPRL2 528
CEEOPRT 528
CEEOPRU 530
CEEOPRU2 531

CWI (compiler-writer interface) *(continued)*
CEEOPS 505
CEEOPSI 514
CEEOPSS 510
CEEOPTI 515
CEEOPWL 532
CEEOPWL2 533
CEEOPWT 534
CEEOPXD 535
CEEOPXG 537
CEEOPXI 539
CEEOPXS 541
CEEOPY 515
CEEOSPWN 561
CEEPCB_DELETE 280
CEEPCB_LOAD 281
CEEPCB_ZFREEST 196
CEEPCB_ZGETST 195
CEEPDEL 277
CEEPDEL2 277
CEEPDELT 283
CEEPFDE 299
CEEPFWSA 312
CEEPGFD 151
CEEPLDE 297
CEEPLOD 273
CEEPLOD2 274
CEEPLODT 282
CEEPLVE 291
CEEPLVI 290
CEEPLVT 292
CEEPPOS 293
CEEPQDF 300
CEEPQDV 301
CEEPQLD 279
CEEPRFD 152
CEEQDMF 229
CEEQFBC 318
CEEQLOD 315
CEEQUMF 229
CEERCB_ZFREEST 198
CEERCB_ZGETST 197
CEESDMP 373
CEETBCK 376
CEETGCAA 322
CEETGTFN 311
CEETHLOC 305
CEETLOC 303
CEETLOR 309
CEETRCB 374
CEETREC 166
CEETREN 167
CEETSFB 321
CEETSFC 319
CEEURTB 390
CEEV#FRS 200
CEEV#GTS 200
CEEVDMP 381
CEEVGTSB 198
CEEVGTUN 88
CEEVH2OS 212

CWI (compiler-writer interface) *(continued)*
CEEVHRPT 201
CEEVROND 210
CEEVRONU 211
CEEVSSEG 89
CEEVUHCR 202
CEEVUHFR 204
CEEVUHGT 203
CEEVUHRP 204
CEEVXPAL 208
CEEYCVHE 359
CEEYCVHF 361
CEEYCVHI 366
CEEYDSAF 256
CEEYEPAF 25
CEEYPPAF 27, 28
CEEZDEL 271
CEEZDELR 272
CEEZLOD 270
CEEZLODR 271
change the MSGFILE ddname 230
close ddname 227
conversion routine 366
dump services 388
message services 390
obtain program's invocation name 164
PLIST manipulation CWI 163
process-level FREESTORE 195
process-level GETSTORE 195
region-level FREESTORE 197
region-level GETSTORE 197
set interrupt option 138
set return save area 162
snap dump services 388
user routine traceback service 390
CWI for scalar math routines 340
CWI services 270, 271, 273

D

data area
member list 74
data type definitions 77
data types
CEECTOK 218
CHARn 78
COMPLEX16 78
COMPLEX8 78
entry 78
ENTRY 78
FEED_BACK 78
FLOAT4 78
FLOAT8 78
HCURSOR 78
INT2 78
INT4 78
label 79
LABEL 78
POINTER 78
RCURSOR 78
VSTRING 78

ddname
CEECHMF, change MSGFILE CWI 230
CEECLOS, close CWI 227
CEEODMF, open an input ddname CWI 227
CEEOPMF, open MSGFILE CWI 228
CEEQDMF, query an input ddname CWI 229
CEEQUMF, query MSGFILE CWI 229
CEESNAP 390
debug event handler 323
debug services
See interactive debug services
Debug Tool 315
Debug Tool event 465
DECIMAL 589
default options event 483
degree input/output trig functions 351
destructor function processing 249
determine enclave work area lengths event 480
determine working storage (CICS only) event 481
DFSORT 335
disability 669
dll initialization event 472
documents, licensed xvii
downward-growing stack frame
CEEVROND 210
run on 210
downward-growing stack segment
CEEVROND 210
run on 210
DSA (dynamic storage area XPLINK) 31
DSA (dynamic storage area) 29
dummy DSA 30
layout 30
managing library stack 86
example 87
managing user stack 82, 85
examples 83, 85
zeroth DSA 30
DSA exit routine 462
dummy DSA block chain, setting 163
dump event handler event 455
dump services 371, 388
CEE3DMP 373
CEEBDMP 385
CEEHDMP 384
CEEKSNP 388
CEELDMP 380
CEESDMP 371
CEETRCB 374
CEEVDMP 381
member language dump exit 379
snap dump services 388
dynamic load libraries (DLL) 297
dynamic storage area
See DSA
dynamic storage area XPLINK
See DSA
dynamic storage services 193

E

EBCDIC
character mode
determine 239
set 237
swap 238
EDB (enclave data block)
constants 57
cross reference 58
field descriptions 53
format of 53
enclave data block
See EDB
enclave initialization 127
enclave initialization event 466
enclave level delete CWI services
CEEPDEL 277
CEEPDEL2 277
enclave level load CWI services
CEEPLOD 273
enclave level LOAD CWI services
CEEPLOD2 274
enclave services, program manager
See program manager
enclave termination 128
enclave termination event 469
enclaves
CEE3CRE 155
created enclaves 155
creating a new enclave 155
environment variables 566
error handling 337
error recovery, user-provided
CEE3ERP 241
CEE3RSUM 242
event codes
atterm 170, 464
automatic destructor 491
cancel load module 490
condition handling
condition enablement 261, 445
condition handling for given stack frame 261, 445
stack frame zero handling 261, 445
Debug Tool 465
dump events 379
enclave initialization 170
enclave termination 170
get function pointer 489
GOTO target DSA 261, 461
interrupt received 486
main-opts event 450
member needs options processing 482
normal target DSA 486
POSIX event code 474
process initialization 170
process termination 170
release function pointer 489
release load module 490
run-time options 170, 449, 483, 484
static constructor 477

event codes *(continued)*
static destructor 484
utility event 451
event handler routine, member language 444
event handler, with member list 76
events
atterm event 464
automatic destructor 491
cancel load module 490
command line equivalent event 483
country code change event 463
Debug Tool event 465
default options event 483
determine enclave work area lengths event 480
determine working storage (CICS only) event 481
dll initialization event 472
DSA exit routines event 462
dump event handler event 455
enclave initialization event 466
enclave termination event 469
get function pointer 489
handle condition according to language defaults event 448
handle condition represented by the CIB event 445
identify module entry point event 479
interrupt received event 486
main routine invocation event 138, 463
main-opts event 450
member needs options processing event 482
national language change event 463
new condition event 460
new load module event 459
normal target DSA 486
perform enablement for this stack frame event 447
perform GOTO validation (CICS only) event 482
POSIX events event 474
preallocated storage event 484
process initialization event 465
process termination event 471
query/build feedback code event 470
region initialization event 478
region termination event 479
release function pointer 489
release load module 490
resume from a condition handler event 461
run-time options event 449
stack frame zero processing event 473
static destructor event 484
static object constructor event 477
utility event 451
examples
CALL linkage argument 657
exception handling, handler errors 264
exit
dump 379
load/delete 569
exit routine 261, 462
explicit DLL reference
CEEPFDE 299
CEEPLDE 297
CEEPQDF 300
explicit DLL reference *(continued)*
CEEPQDV 301
extended run-time language interface 403
external names, Language Environment 2
externals table 139

F

Facility_ID 220
FDCB (function descriptor control block)
format of 306
feedback code 222
feedback code routine
build 320
query 318
translate 319
fetch
bootstrap behavior 138
fetch anchor routine 439
Find previous DSA
CEEYDSAF 256
floating-point
register conventions 3
format of
CAA 32
CEESTART 137
EDB 53
LIBVEC descriptor 288
Non-XPLINK CEESTART 130
OCB 589
PCB 63
RCB 70
SOCB 643
XPLINK CEESTART 133
function descriptor control block
See FDCB
function invocation of old code 311
function prototypes 77

G

get function pointer CWI 151
get function pointer event 489
get next CAA pointer CWI 322
getenv() 566

H

handle condition according to language defaults event 448
handle condition represented by the CIB event 445
Header 235
heap management 193
heap services 193
user-created services 202
vendor heap manager interface 205
XPLINK Compatibility Stack Swapping Services 210
XPLINK DSA Extension Services 208
hex storage dump service 384
HLL condition handling conventions 266

HLL condition handling information 267
HLL condition handling routine 261, 445, 447, 448

I

identify module entry point event 479
IEEE floating-point functions 576
  __chkbfp() 576
  __fp_btoh() 576
  __fp_cast() 577
  __fp_htob() 578
  __fp_level() 579
  __fp_read_rnd() 579
  __fp_setmode() 580
  __fp_swap_rnd() 582
  __fp_swapmode() 581
  __fpc_rd() 583
  __fpc_rs() 584
  __fpc_rw() 584
  __fpc_sm() 585
  __fpc_wr() 586
  __isBFP() 586
IEEE floating-point, C/C++ special purpose interfaces 575
IGZCXCC 571
ILBOLLDX 569
ILC (interlanguage communication)
  conventions 1
  epilog code 25
  load module 1
  member identifier 16
  PPA1 8
  PPA2 8
  program flags, Language Environment 13, 14, 15
  prolog code
    control level 8
  prolog information blocks 8
  routine layout 4
  service interface 1
ILC within SORT exits 337
implicit DLL reference
  CEETGTFN 311
  CEETLOC 303
  CEETLOR 309
IMS 437
IMS (information management system)
  implementation 438
  IMS-to-Language Environment interface 437
  Language Environment-to-IMS interface 438
information management system
  See IMS
init/term overview 129
initialization 127
initialization member event codes 169
initialization member interfaces
  enclave initialization components
    CEEINT 129
    CEELLIST 129
    CEESGnnn 129
    CEESTART 129
initialization parameter list 142
initialization/termination application interfaces 171
initializing the preinitialization environment 189
instance specific information (ISI) 221
interactive debug services 315
  Language Environment actions for 329
  Language Environment data areas 330
interactive test services
  See interactive debug services
interface
  to shunt routine 262, 263
interface validation exit
  See also IVE
  CEEXVSEL macro 177
  high-level selection criteria 177
  language-specific
    arguments passed to 180
    example of 184
  reference list 181
  structure of 176
interface, Language Environment service 1, 493
interlanguage communication
  See also ILC
  with IMS interface 437
internal names 2
interrupt
  CEEBSIOP 138
  set interrupt option CWI 138
interrupt received event 486
invalid resume request
  CEE3SGLN 245
ISI (instance specific information) 221
IVE (interface validation exit) 175

K

keyboard 669

L

Language Environment
  abend summary 171
  abends 267
    initialization 147
    storage management 88
    termination 168
  CICS interface 402
  common anchor area (CAA) 32, 439
  conversion services 358, 359, 361, 366
    terminology 358
  ddname
    CEECHMF 230
    CEECLOS 227
    CEEQDMF 229
    CEEQUMF 229
    CEESNAP 390
  enclave data block (EDB) 53
  function control block (FDCB) 306
  interface validation exit
    See IVE
  Non-XPLINK Stack Storage Model 82
  process control block (PCB) 63

Language Environment *(continued)*
region control block (RCB) 70
shell, exit from/re-entry to, CEEBSHL 174
variable control block (VDCB) 310
XPLINK Stack Storage Model 105
language list 141
language support 225
language-specific interface validation exit 179
Leaf Routines 100
LIBPACK
CSECT definition 286
description 286
library stack
allocate/return storage 86
managing 86
library subroutine access 284
LIBVEC 285
CWI to low-level services 290
descriptor format 288
direct access instructions 285
indirect access instructions 285
initialization 289
library subroutine access table
See LIBVEC
LIBVEC
CWI to low-level services 290
description 285
descriptor format 288
direct access instructions 285
indirect access instructions 285
initialization 289
termination 292
verify load/delete 291
licensed documents xvii
Linkage
CEEVH2OS 212
OS linkage 212
linkage, CALL 81
linkage, FASTLINK 92
linkage, standard 82
linkage, XPLINK 104
load module
*name support
CICS 269
MVS 269
z/OS UNIX 270
definition of 1
Locates a field in the PPA1 optional area
CEEYPPAF 28
Locates XPLINK/non-XPLINK entry point
CEEYEPAF 25
look up anchor routine 440
LookAt message retrieval tool xviii
looking up RCBs 165

M

machine state block 653
macro
CEEOCB, options control block 589
macro *(continued)*
CEESOCB, supplementary options control block 643
CEEXVSEL, high-level selection criteria 177
main routine invocation event 138, 463
main routine parameter list processing 163
main-opts event 450
mask, program 3
math library
callable services 339
condition code definitions 353
conversion services 359, 361
conversion routine 366
CWI for scalar math routines 340
math services 342
message text 353
math services
degree input/output trig functions 351
scalar bit manipulation routines 352
scalar math services 343
value of inserts 355
MCH (machine state block) 653
member bootstrap routine 160
member interfaces
for initialization 169
for termination 170
member language
about 443
central control blocks 444
event handler 444
restricted use of OS services 443
member list 74
member needs options processing event 482
member termination interfaces 166
message
single-line service 380
message handling 225
country code change event 463
find message insert 233
introduction 226
national language change event 463
message handling services 231
message retrieval tool, LookAt xviii
message services 234, 390
CEECMIB 232
CEEMFNDM 232
message text, math library 353
Mixed Mode Support for Enhanced ASCII C-RTL
ASCII/EBCIDIC 235
Header information 236
Overview 235
Usage example 236
Msg_No 220
MSGFILE
related CWIs 226

N

NAB (next available byte) 88
national language
national language change event 463

national language change event 463
nested enclaves, creating 158
new condition event 460
new load module event 459
next available byte
  See NAB
NLS (national language support)
  country code change event 463
  message handling services 225
  national language change event 463
Non-XPLINK CEESTART 130
normal resume event 486
normal resume in DSA event 486
normal target DSA 486
Notices 671

O

obtaining program's invocation name 164
OCB (options control block)
  constants 619
  cross reference 620
  field descriptions 589
OCB (options control block) and SOCB (supplementary options control block)
  type field definitions 589
options control block
  See OCB
OS/VS COBOL
  call/cancel routine 571
  library load/delete exit 569

P

parameter list
  main routine parameter list processing 163
  with IMS interface 437
parameter/parameter list architecture 81
  access modes 81
  argument passing semantics 81
PCB
  constants 65
  cross reference 66
  field descriptions 63
  format of 63
perform enablement for this stack frame event 447
perform GOTO validation (CICS only) event 482
performance analysis services
  profile tool event handler 331
POSIX event code 474
POSIX function
  clearenv() 566
  getenv() 566
  setenv() 566
PPA1 Flag 1
  program flags, Language Environment 18
PPA1 Flag 2
  program flags, Language Environment 19
PPA1 Flag 3
  program flags, Language Environment 20
PPA1 Flag 4
  program flags, Language Environment 21
PPA1 Word
  program flags, Language Environment 22
preallocated storage event 484
preinitialization interfaces 186
preinitialization service routines 189
procedure prototypes 77
process control block
  See PCB
process initialization 127
process initialization event 465
process services, program manager
  See program manager
process termination 129
process termination event 471
profiler tools
  See performance analysis services
program invocation name, obtaining 164
program manager 269
  CWI services 270, 271, 273
  enclave level services 273
  load module name support
    CICS 269
    MVS 269
    z/OS UNIX 270
  process level services 270
  region-level services 271
  responsibilities 269
program mask
  callable services 3
  conventions 3
PTR INTOAREA 589

Q

query/build feedback code event 470
quick options 482

R

RCB (region control block)
  constants 71
  cross reference 72
  field descriptions 70
  format of 70
RCB look up 165
recursive Language Environment code 1
reentrancy, Language Environment 1
reference list, interface validation exit 181
region control block
  See RCB
region initialization event 478
region services, program manager
  See program manager
region termination event 479
register event handler 168
release function pointer CWI 152
release function pointer event 489
release load module event 490
resume from a condition handler event 461

return save area, setting 162
returns the address of the entry point of the function owning the dsa_p DSA.
  __ep_find () 27
RMODE 2
routines, Language Environment
  AMODE 2
  linking 1
  RMODE 2
run-time language interface, extended 403
run-time options
  compiler service, CEECOPP 171
  TRACE 392
run-time options event 449
RUNOPTS 171

S

scalar bit manipulation routines 352
scalar math services 343
segment
  CEEVROND 210
  CEEVRONU 211
  CEEVSSEG 89
  downward-growing stack segment 210
  stack segment bounds 89
  upward-growing stack segment 211
services, Language Environment
  conventions 1
  interfaces 1
set anchor routine 440
set dummy DSA block chain 163
set enclave name CWI 148
set enclave return code modifier CWI 149
set return save area CWI 162
setenv() 566
severity 220, 221
shortcut keys 669
shunt routine 262
shunt routine interface
  abend 263
  establishing 263
signal
  CEE3SGLN 245
  CEE3SGLT 246
SIGNED 589
snap dump services 388
SOCB (supplementary options control block)
  constants 645
  cross reference 645
  field descriptions 643
SORT interface 335
stack frame
  CEEVSSEG 89
  segment bounds 89
stack frame zero processing event 473
stack management 83, 85
stack segment
  CEEVSSEG 89
  segment bounds 89
stack segment ranges 213
Stack Swapping Services
  XPLINK Compatibility 210
static destructor event 484
static object constructor event 477
storage management 193
  abend
    reason codes 88
  dynamic storage services 193
  heap 193
  library stack 86
  NAB locator 88
  stack 83, 85
  user stack 82, 85
  XPLINK DSA extension 208, 209
STRUCTURE 589
stub
  Call by Name 305
  CEETHLOC 305
stub for trigger load
  CEETHLOC 305
  on XPLINK call by name 305
  XPLINK 305
supplementary options control block
  See SOCB
suppress printing of messages 234
synchronous condition handling
  HLL condition handling conventions 266
  HLL condition handling information 267
syntax diagrams
  how to read xv

T

T_I_S condition 169
terminate without raising T_I_S 167
termination 127, 128
  ABEND 4094 168
  CEE3SGLT 246
termination member event codes 170
termination member interfaces 166
test services
  See interactive debug services
The preinitialization environment and SRB mode 189
thread initialization 127
thread level load/delete CWI services
  CEEPDELT 283
  CEEPLODT 282
TRACE run-time option 392
Traceback utility 376
tracing services
  add a trace table entry, CEEKCTRC 394
  global tracing 393
  member-specific tracing 393
trigger load on call 303
trigger load on reference 309
type field definitions
  ADDRESS 589
  BITSTRING 589
  CHARACTER 589
  DECIMAL 589
  PTR INTOAREA 589

type field definitions *(continued)*
SIGNED 589
STRUCTURE 589

U

upward-growing stack frame
CEEVRONU 211
run on 211
upward-growing stack segment
CEEVRONU 211
run on 211
user routine traceback service 390
user stack
allocate/extend/return storage 82
managing 83
obtain a DSA 85
user-created services 202
user-provided error recovery
CEE3ERP 241
CEE3RSUM 242
utility event 451

V

value of inserts, math services 355
variable descriptor control block
See FDCB
variable dump service 381
VDCB (variable descriptor control block)
format of 310
vendor heap manager interface 205
vendor interfaces, C/C++-specific 235
vendor interfaces, COBOL-specific 569

W

writable static area (WSA) 312

X

XPLINK CEESTART 133
XPLINK Compatibility Stack Swapping Services 210
XPLINK DSA extension 208, 209
XPLINK DSA Extension Services 208
XPLINK to OS linkage on upward-growing stack frame
CEEVH2OS 212
XPLINK to 212
XPLINK to OS linkage on upward-growing stack segment
CEEVH2OS 212
XPLINK to 212

Z

z/OS UNIX support 493

Readers' Comments — We'd Like to Hear from You

z/OS
Language Environment Vendor Interfaces

Publication No. SA22-7568-03

Overall, how satisfied are you with the information in this book?

	Very Satisfied	Satisfied	Neutral	Dissatisfied	Very Dissatisfied
Overall satisfaction	☐	☐	☐	☐	☐

How satisfied are you that the information in this book is:

	Very Satisfied	Satisfied	Neutral	Dissatisfied	Very Dissatisfied
Accurate	☐	☐	☐	☐	☐
Complete	☐	☐	☐	☐	☐
Easy to find	☐	☐	☐	☐	☐
Easy to understand	☐	☐	☐	☐	☐
Well organized	☐	☐	☐	☐	☐
Applicable to your tasks	☐	☐	☐	☐	☐

Please tell us how we can improve this book:

Thank you for your responses. May we contact you? ☐ Yes ☐ No

When you send comments to IBM, you grant IBM a nonexclusive right to use or distribute your comments in any way it believes appropriate without incurring any obligation to you.

Name _____ Address _____

Company or Organization _____

Phone No. _____

Readers' Comments — We'd Like to Hear from You
SA22-7568-03

Cut or Fold
Along Line

Fold and Tape | **Please do not staple** | Fold and Tape

NO POSTAGE
NECESSARY
IF MAILED IN THE
UNITED STATES

BUSINESS REPLY MAIL

FIRST-CLASS MAIL PERMIT NO. 40 ARMONK, NEW YORK

POSTAGE WILL BE PAID BY ADDRESSEE

IBM Corporation
Department 55JA, Mail Station P384
2455 South Road
Poughkeepsie, NY
12601-5400

Fold and Tape | **Please do not staple** | Fold and Tape

SA22-7568-03

Cut or Fold
Along Line

Program Number: 5694-A01, 5655-G52

Printed in U.S.A.

SA22-7568-03