z/OS Communications Server

SNA Operation

Version 1 Release 4

SC31-8779-02

z/OS Communications Server

SNA Operation

Version 1 Release 4

SC31-8779-02

Note:
Before using this information and the product it supports, be sure to read the general information under “Notices” on page 547.

Third Edition (September 2002)

This edition applies to Version 1 Release 4 of z/OS (5694-A01) and Version 1 Release 4 of z/OS.e (5655-G52) and to all subsequent releases and modifications until otherwise indicated in new editions.

Publications are not stocked at the address given below. If you want more IBM® publications, ask your IBM representative or write to the IBM branch office serving your locality.

A form for your comments is provided at the back of this document. If the form has been removed, you may address comments to:

IBM Corporation
Software Reengineering
Department G7IA/ Bldg 503
Research Triangle Park, NC 27709-9990
U.S.A.

If you prefer to send comments electronically, use one of the following methods:

Fax (USA and Canada):
1-800-254-0206

Internet e-mail:
usib2hpd@vnet.ibm.com

World Wide Web:
http://www.ibm.com/servers/eserver/zseries/zos/webqs.html

IBMLink™:
CIBMORCF at RALVM17

IBM Mail Exchange:
tkinlaw@us.ibm.com

When you send information to IBM, you grant IBM a nonexclusive right to use or distribute the information in any way it believes appropriate without incurring any obligation to you.

© Copyright International Business Machines Corporation 1984, 2002. All rights reserved.
US Government Users Restricted Rights – Use, duplication or disclosure restricted by GSA ADP Schedule Contract with IBM Corp.

Contents

Figures vii

Tables ix

About this document xi
Who should use this document xi
Artwork used in this document xi
Where to find more information xii
Where to find related information on the Internet xiii
Accessing z/OS licensed documents on the Internet xiv
Using LookAt to look up message explanations xiv
How to contact IBM service xiv
z/OS Communications Server information xv

Summary of changes xxiii

Chapter 1. Introducing an operator to VTAM 1
Monitoring VTAM 2
Controlling VTAM 5

Chapter 2. VTAM operator commands 9
Command fundamentals 9
Entering operator commands 9
Controlling operator messages 10
Using wildcard names 11
Using MVS system symbols 13
Unformatted system services (USS) command syntax 13
DISPLAY ADJCLUST command 15
DISPLAY ADJCP command 17
DISPLAY ADJSSCPS command 20
DISPLAY APING command 28
DISPLAY APINGDTP command. 33
DISPLAY APPLS command 34
DISPLAY APPNTOSA command 39
DISPLAY BFRUSE command 40
DISPLAY BNCOSMAP command 46
DISPLAY CDRMS command 48
DISPLAY CDRSCS command 52
DISPLAY CLSTRS command 57
DISPLAY CNOS command 63
DISPLAY CONVID command 66
DISPLAY COS command 69
DISPLAY CPCP command 71
DISPLAY CSM command 74
DISPLAY DIRECTRY command 77
DISPLAY DISK command 81
DISPLAY DLURS command 83
DISPLAY EXIT command 84
DISPLAY GRAFFIN command 87
DISPLAY GROUPS command 89
DISPLAY ID command 93
DISPLAY INOPDUMP command 133
DISPLAY LINES command 134

© Copyright IBM Corp. 1984, 2002

DISPLAY LMTBL command 139
DISPLAY LUGROUPS command 142
DISPLAY MAJNODES command 146
DISPLAY MODELS command 148
DISPLAY NCPSTOR command 151
DISPLAY NETSRVR command 153
DISPLAY PATHS command 157
DISPLAY PATHTAB command 159
DISPLAY PENDING command 161
DISPLAY ROUTE command 163
DISPLAY RSCLIST command 170
DISPLAY RTPS command 178
DISPLAY SAMAP command 181
DISPLAY SATOAPPN command 182
DISPLAY SESSIONS command 183
DISPLAY SNSFILTR command 192
DISPLAY SRCHINFO command 193
DISPLAY STATIONS command 200
DISPLAY STATS command 205
DISPLAY STORUSE command 215
DISPLAY TABLE command 221
DISPLAY TERMS command 225
DISPLAY TGPS command 230
DISPLAY TNSTAT command 233
DISPLAY TOPO command 234
DISPLAY TRACES command 247
DISPLAY TRL command 255
DISPLAY TSOUSER command 259
DISPLAY USERVAR command 260
DISPLAY VTAMOPTS command 262
DISPLAY VTAMSTOR command 270
HALT command 276
HALT CANCEL command 277
HALT QUICK command 278
MODIFY ALSLIST command 279
MODIFY APINGDTP command 282
MODIFY CDRM command 283
MODIFY CHKPT command 285
MODIFY CNOS command 287
MODIFY COMPRESS command 292
MODIFY CSALIMIT command 294
MODIFY CSDUMP command 297
MODIFY CSM command 299
MODIFY DEFAULTS command 300
MODIFY DEFINE command 302
MODIFY DIRECTRY command 306
MODIFY DR command 309
MODIFY DUMP command 314
MODIFY ENCR command 320
MODIFY EXIT command 322
MODIFY IMR command 326
MODIFY INOPDUMP command 328
MODIFY IOPD command 330
MODIFY IOPURGE command 331
MODIFY LINEDEF command 333
MODIFY LL2 command 334

MODIFY LOAD command 337
MODIFY MSGMOD command 345
MODIFY NCP command 346
MODIFY NEGPOLL command 347
MODIFY NOTNSTAT command 348
MODIFY NOTRACE command 349
MODIFY POLL command 364
MODIFY PPOLOG command 365
MODIFY PROFILES command 366
MODIFY QUERY command 367
MODIFY RESOURCE command 368
MODIFY RTP command 374
MODIFY SECURITY command 375
MODIFY SESSION command 379
MODIFY SUPP command 380
MODIFY TABLE command 382
MODIFY TGP command 389
MODIFY TNSTAT command 391
MODIFY TOPO command 393
MODIFY TRACE command 396
MODIFY USERVAR command 418
MODIFY VTAMOPTS command 422
START command 430
VARY ACQ command 448
VARY ACT command 452
VARY ANS command 481
VARY CFS command 482
VARY DIAL command 484
VARY DRDS command 485
VARY HANGUP command 488
VARY INACT command 489
VARY INOP command 501
VARY LOGON command 502
VARY NOLOGON command 505
VARY PATH command 507
VARY REL command 509
VARY TERM command 512

Chapter 3. Logon manager operator commands 517
Command fundamentals 517
Syntax notation 517
Entering operator commands 517
Using MVS system symbols 517
Correct and incorrect commands 518
MODIFY HELP command 519
MODIFY INFO command 520
MODIFY MEMBER command 522
MODIFY MINLINK command 523
MODIFY STOP command 524
START command 525

Appendix A. Cross-reference for VTAM DISPLAY commands 527

Appendix B. How to read the syntax diagrams 535

Appendix C. Architectural specifications 539

Appendix D. Information APARs 541
Information APARs for IP documents 541
Information APARs for SNA documents 542
Other information APARs. 542

Appendix E. Accessibility 545
Using assistive technologies 545
Keyboard navigation of the user interface. 545

Notices 547
Trademarks. 550

Index 553

Communicating Your Comments to IBM 569

Figures

1. Conventions used in network illustrations xii
2. Sample VTAM network 2
3. DISPLAY TOPO topology example 1 236
4. DISPLAY TOPO topology example 2 236
5. Resource and trace reference 405
6. Valid resource types for VARY ACT 459
7. Mutually exclusive (X) operands for VARY ACT 460
8. Valid resource types for VARY INACT. 493
9. DISPLAY output cross reference (A-E) 528
10. DISPLAY output cross reference (G-P) 530
11. DISPLAY output cross reference (P-W) 532

© Copyright IBM Corp. 1984, 2002

Tables

1. Buffer pools 42
2. LOCSIZE values 238
3. Active and inactive status requirements for MODIFY DR for an NCP 310
4. Active and inactive status requirements for MODIFY DR for local peripheral nodes 311
5. Relationship between ACTION and IPLTIME operands 340
6. Examples of time specifications for IPLTIME 343
7. Precedence of values when SAVEMOD and DUMPLOAD are specified 461
8. Results when LOADFROM=HOST or LOADFROM is not specified 462
9. Results when LOADFROM=EXT is specified 463
10. Actions to be taken for unsuccessful DUMP and LOAD 463
11. Active and inactive status requirements for dynamic reconfiguration of an NCP 477
12. Active and inactive status requirements for dynamic reconfiguration for a local SNA major node 479
13. Active and inactive status requirements for VARY DRDS for an NCP 486
14. Active and inactive status requirements for VARY DRDS for local SNA major nodes 487
15. IP information APARs 541
16. SNA information APARs 542
17. Non-document information APARs 543

© Copyright IBM Corp. 1984, 2002

About this document

This document is intended to help network operators use VTAM® commands and messages to control and maintain a telecommunication network. It contains descriptions of VTAM commands.

You can use this document as a reference for specific operator commands and as background reading to help understand how to operate VTAM.

This document supports z/OS.e™.

Who should use this document

This document is primarily a reference for network operators. It also contains introductory material intended for a new operator. The system programmer can use this document as a reference about command syntax and function to write a local operating procedure.

To make the best use of this document, both the operator and the system programmer should be familiar with the local operating system.

As a VTAM operator, you should have background knowledge of VTAM as well as a background knowledge of IBM's network programs. Information in *System Network Architecture Technical Overview* might also be of use to a new operator.

A more experienced operator might want to consult *z/OS Communications Server: SNA Network Implementation Guide*.

A system programmer preparing a local operating procedure should know how to plan a VTAM installation, include VTAM in an MVS™ operating system, and define a VTAM domain. A prerequisite publication for system programmers who use this document is *z/OS Communications Server: SNA Network Implementation Guide*.

Artwork used in this document

Figure 1 on page xii shows the conventions used in this document to illustrate the parts of a network.

© Copyright IBM Corp. 1984, 2002

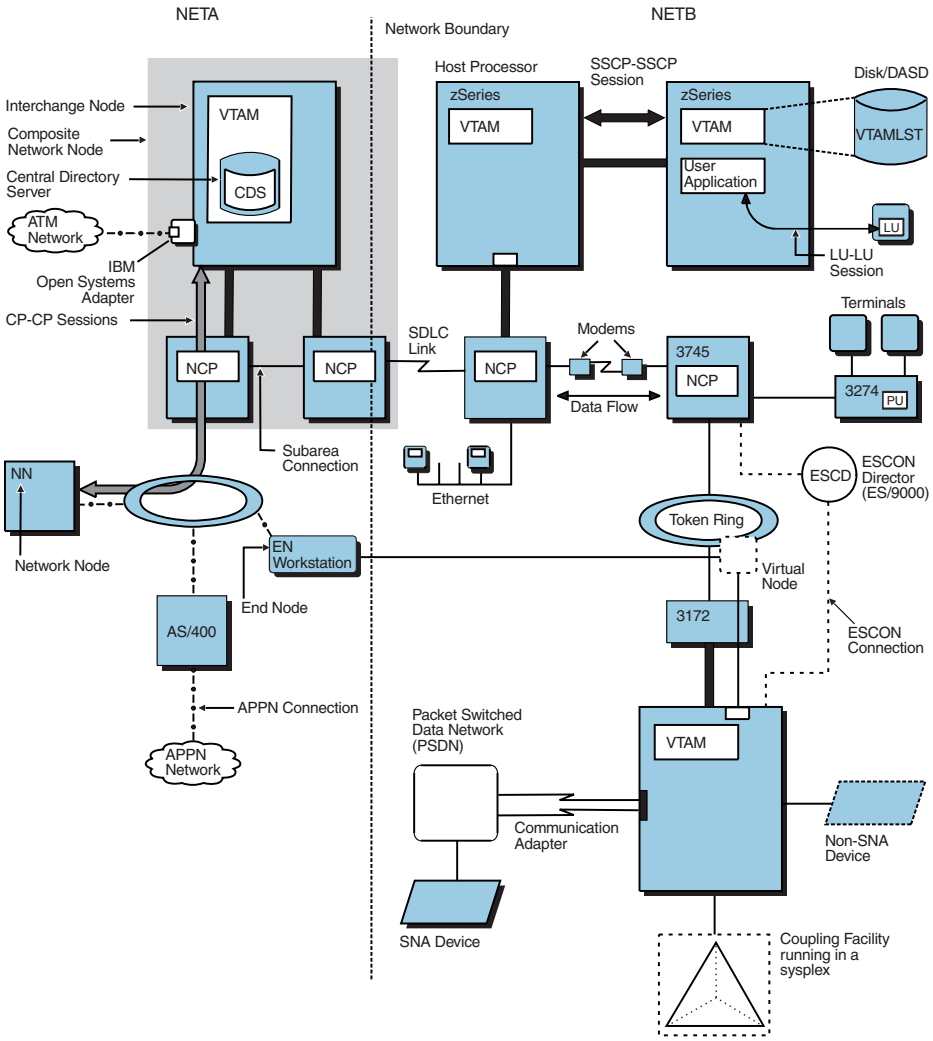

Figure 1. Conventions used in network illustrations

Where to find more information

This section contains:

- Pointers to information available on the Internet
- Information about licensed documentation
- Information about LookAt, the online message tool

- A set of tables that describes the documents in the z/OS™ Communications Server (z/OS CS) library, along with related publications

Where to find related information on the Internet

z/OS

– http://www.ibm.com/servers/eserver/zseries/zos/

z/OS Internet Library

– http://www.ibm.com/servers/eserver/zseries/zos/bkserv/

IBM Communications Server product

– http://www.software.ibm.com/network/commserver/

IBM Communications Server product support

– http://www.software.ibm.com/network/commserver/support/

IBM Systems Center publications

– http://www.redbooks.ibm.com/

IBM Systems Center flashes

– http://www-1.ibm.com/support/techdocs/atsmastr.nsf

RFCs

– http://www.ietf.org/rfc.html

RFC drafts

– http://www.ietf.org/ID.html

Information about Web addresses can also be found in information APAR II11334.

DNS web sites

For more information about DNS, see the following USENET news groups and mailing:

USENET news groups:

comp.protocols.dns.bind

For BIND mailing lists, see:

- http://www.isc.org/ml-archives/
  - BIND Users
    - Subscribe by sending mail to bind-users-request@isc.org.
    - Submit questions or answers to this forum by sending mail to bind-users@isc.org.
  - BIND 9 Users (Note: This list may not be maintained indefinitely.)
    - Subscribe by sending mail to bind9-users-request@isc.org.
    - Submit questions or answers to this forum by sending mail to bind9-users@isc.org.

For definitions of the terms and abbreviations used in this document, you can view or download the latest *IBM Glossary of Computing Terms* at the following Web address:

http://www.ibm.com/ibm/terminology

Note: Any pointers in this publication to Web sites are provided for convenience only and do not in any manner serve as an endorsement of these Web sites.

Accessing z/OS licensed documents on the Internet

z/OS licensed documentation is available on the Internet in PDF format at the IBM Resource Link™ Web site at:

`http://www.ibm.com/servers/resourcelink`

Licensed documents are available only to customers with a z/OS license. Access to these documents requires an IBM Resource Link user ID and password, and a key code. With your z/OS order you received a Memo to Licensees, (GI10-0671), that includes this key code.

To obtain your IBM Resource Link user ID and password, log on to:

`http://www.ibm.com/servers/resourcelink`

To register for access to the z/OS licensed documents:

1. Sign in to Resource Link using your Resource Link user ID and password.
2. Select **User Profiles** located on the left-hand navigation bar.

Note: You cannot access the z/OS licensed documents unless you have registered for access to them and received an e-mail confirmation informing you that your request has been processed.

Printed licensed documents are not available from IBM.

You can use the PDF format on either **z/OS Licensed Product Library CD-ROM** or IBM Resource Link to print licensed documents.

Using LookAt to look up message explanations

LookAt is an online facility that allows you to look up explanations for most messages you encounter, as well as for some system abends and codes. Using LookAt to find information is faster than a conventional search because in most cases LookAt goes directly to the message explanation.

You can access LookAt from the Internet at:

`http://www.ibm.com/eserver/zseries/zos/bkserv/lookat/`

or from anywhere in z/OS where you can access a TSO/E command line (for example, TSO/E prompt, ISPF, z/OS UNIX System Services running OMVS). You can also download code from the *z/OS Collection* (SK3T-4269) and the LookAt Web site that will allow you to access LookAt from a handheld computer (Palm Pilot VIIx suggested).

To use LookAt as a TSO/E command, you must have LookAt installed on your host system. You can obtain the LookAt code for TSO/E from a disk on your *z/OS Collection* (SK3T-4269) or from the **News** section on the LookAt Web site.

Some messages have information in more than one document. For those messages, LookAt displays a list of documents in which the message appears.

How to contact IBM service

For immediate assistance, visit this Web site:
http://www.software.ibm.com/network/commserver/support/

Most problems can be resolved at this Web site, where you can submit questions and problem reports electronically, as well as access a variety of diagnosis information.

For telephone assistance in problem diagnosis and resolution (in the United States or Puerto Rico), call the IBM Software Support Center anytime (1-800-237-5511). You will receive a return call within 8 business hours (Monday – Friday, 8:00 a.m. – 5:00 p.m., local customer time).

Outside of the United States or Puerto Rico, contact your local IBM representative or your authorized IBM supplier.

If you would like to provide feedback on this publication, see "Communicating Your Comments to IBM" on page 569.

z/OS Communications Server information

This section contains descriptions of the documents in the z/OS Communications Server library.

z/OS Communications Server publications are available:

- Online at the z/OS Internet Library web page at http://www.ibm.com/servers/eserver/zseries/zos/bkserv
- In softcopy on CD-ROM collections.

Softcopy information

Softcopy publications are available in the following collections:

Titles	Order Number	Description
z/OS V1R4 Collection	SK3T-4269	This is the CD collection shipped with the z/OS product. It includes the libraries for z/OS V1R4, in both BookManager® and PDF formats.
z/OS Software Products Collection	SK3T-4270	This CD includes, in both BookManager and PDF formats, the libraries of z/OS software products that run on z/OS but are not elements and features, as well as the *Getting Started with Parallel Sysplex®* bookshelf.
z/OS V1R4 and Software Products DVD Collection	SK3T-4271	This collection includes the libraries of z/OS (the element and feature libraries) and the libraries for z/OS software products in both BookManager and PDF format. This collection combines SK3T-4269 and SK3T-4270.
z/OS Licensed Product Library	SK3T-4307	This CD includes the licensed documents in both BookManager and PDF format.
System Center Publication IBM S/390® Redbooks™ Collection	SK2T-2177	This collection contains over 300 ITSO redbooks that apply to the S/390 platform and to host networking arranged into subject bookshelves.

z/OS Communications Server library

z/OS V1R4 Communications Server documents are available on the CD-ROM accompanying z/OS (SK3T-4269 or SK3T-4307). Unlicensed documents can be viewed at the z/OS Internet library site.

Updates to documents are available on RETAIN® and in information APARs (info APARs). See Appendix D, "Information APARs" on page 541 for a list of the documents and the info APARs associated with them.

- Info APARs for OS/390® documents are in the document called *OS/390 DOC APAR and PTF ++HOLD Documentation* which can be found at http://publibz.boulder.ibm.com/cgi-bin/bookmgr_OS390/BOOKS/IDDOCMST/CCONTENTS.
- Info APARs for z/OS documents are in the document called *z/OS and z/OS.e DOC APAR and PTF ++HOLD Documentation* which can be found at http://publibz.boulder.ibm.com:80/cgi-bin/bookmgr_OS390/BOOKS/ZIDOCMST/CCONTENTS.

Planning and migration:

Title	Number	Description
z/OS Communications Server: SNA Migration	GC31-8774	This document is intended to help you plan for SNA, whether you are migrating from a previous version or installing SNA for the first time. This document also identifies the optional and required modifications needed to enable you to use the enhanced functions provided with SNA.
z/OS Communications Server: IP Migration	GC31-8773	This document is intended to help you plan for TCP/IP Services, whether you are migrating from a previous version or installing IP for the first time. This document also identifies the optional and required modifications needed to enable you to use the enhanced functions provided with TCP/IP Services.
z/OS Communications Server: IPv6 Network and Application Design Guide	SC31-8885	This document is a high-level introduction to IPv6. It describes concepts of z/OS Communications Server's support of IPv6, coexistence with IPv4, and migration issues.

Resource definition, configuration, and tuning:

Title	Number	Description
z/OS Communications Server: IP Configuration Guide	SC31-8775	This document describes the major concepts involved in understanding and configuring an IP network. Familiarity with the z/OS operating system, IP protocols, z/OS UNIX® System Services, and IBM Time Sharing Option (TSO) is recommended. Use this document in conjunction with the *z/OS Communications Server: IP Configuration Reference*.
z/OS Communications Server: IP Configuration Reference	SC31-8776	This document presents information for people who want to administer and maintain IP. Use this document in conjunction with the *z/OS Communications Server: IP Configuration Guide*. The information in this document includes: • TCP/IP configuration data sets • Configuration statements • Translation tables • SMF records • Protocol number and port assignments
z/OS Communications Server: SNA Network Implementation Guide	SC31-8777	This document presents the major concepts involved in implementing an SNA network. Use this document in conjunction with the *z/OS Communications Server: SNA Resource Definition Reference*.
z/OS Communications Server: SNA Resource Definition Reference	SC31-8778	This document describes each SNA definition statement, start option, and macroinstruction for user tables. It also describes NCP definition statements that affect SNA. Use this document in conjunction with the *z/OS Communications Server: SNA Network Implementation Guide*.

Title	Number	Description
z/OS Communications Server: SNA Resource Definition Samples	SC31-8836	This document contains sample definitions to help you implement SNA functions in your networks, and includes sample major node definitions.
z/OS Communications Server: AnyNet SNA over TCP/IP	SC31-8832	This guide provides information to help you install, configure, use, and diagnose SNA over TCP/IP.
z/OS Communications Server: AnyNet Sockets over SNA	SC31-8831	This guide provides information to help you install, configure, use, and diagnose sockets over SNA. It also provides information to help you prepare application programs to use sockets over SNA.
z/OS Communications Server: IP Network Print Facility	SC31-8833	This document is for system programmers and network administrators who need to prepare their network to route SNA, JES2, or JES3 printer output to remote printers using TCP/IP Services.

Operation:

Title	Number	Description
z/OS Communications Server: IP User's Guide and Commands	SC31-8780	This document describes how to use TCP/IP applications. It contains requests that allow a user to log on to a remote host using Telnet, transfer data sets using FTP, send and receive electronic mail, print on remote printers, and authenticate network users.
z/OS Communications Server: IP System Administrator's Commands	SC31-8781	This document describes the functions and commands helpful in configuring or monitoring your system. It contains system administrator's commands, such as TSO NETSTAT, PING, TRACERTE and their UNIX counterparts. It also includes TSO and MVS commands commonly used during the IP configuration process.
z/OS Communications Server: SNA Operation	SC31-8779	This document serves as a reference for programmers and operators requiring detailed information about specific operator commands.
z/OS Communications Server: Quick Reference	SX75-0124	This document contains essential information about SNA and IP commands.

Customization:

Title	Number	Description
z/OS Communications Server: SNA Customization	LY43-0092	This document enables you to customize SNA, and includes the following: • Communication network management (CNM) routing table • Logon-interpret routine requirements • Logon manager installation-wide exit routine for the CLU search exit • TSO/SNA installation-wide exit routines • SNA installation-wide exit routines

Writing application programs:

Title	Number	Description
z/OS Communications Server: IP Application Programming Interface Guide	SC31-8788	This document describes the syntax and semantics of program source code necessary to write your own application programming interface (API) into TCP/IP. You can use this interface as the communication base for writing your own client or server application. You can also use this document to adapt your existing applications to communicate with each other using sockets over TCP/IP.
z/OS Communications Server: IP CICS Sockets Guide	SC31-8807	This document is for programmers who want to set up, write application programs for, and diagnose problems with the socket interface for CICS® using z/OS TCP/IP.
z/OS Communications Server: IP IMS Sockets Guide	SC31-8830	This document is for programmers who want application programs that use the IMS™ TCP/IP application development services provided by IBM's TCP/IP Services.
z/OS Communications Server: IP Programmer's Reference	SC31-8787	This document describes the syntax and semantics of a set of high-level application functions that you can use to program your own applications in a TCP/IP environment. These functions provide support for application facilities, such as user authentication, distributed databases, distributed processing, network management, and device sharing. Familiarity with the z/OS operating system, TCP/IP protocols, and IBM Time Sharing Option (TSO) is recommended.
z/OS Communications Server: SNA Programming	SC31-8829	This document describes how to use SNA macroinstructions to send data to and receive data from (1) a terminal in either the same or a different domain, or (2) another application program in either the same or a different domain.
z/OS Communications Server: SNA Programmer's LU 6.2 Guide	SC31-8811	This document describes how to use the SNA LU 6.2 application programming interface for host application programs. This document applies to programs that use only LU 6.2 sessions or that use LU 6.2 sessions along with other session types. (Only LU 6.2 sessions are covered in this document.)
z/OS Communications Server: SNA Programmer's LU 6.2 Reference	SC31-8810	This document provides reference material for the SNA LU 6.2 programming interface for host application programs.
z/OS Communications Server: CSM Guide	SC31-8808	This document describes how applications use the communications storage manager.
z/OS Communications Server: CMIP Services and Topology Agent Guide	SC31-8828	This document describes the Common Management Information Protocol (CMIP) programming interface for application programmers to use in coding CMIP application programs. The document provides guide and reference information about CMIP services and the SNA topology agent.

Diagnosis:

Title	Number	Description
z/OS Communications Server: IP Diagnosis	GC31-8782	This document explains how to diagnose TCP/IP problems and how to determine whether a specific problem is in the TCP/IP product code. It explains how to gather information for and describe problems to the IBM Software Support Center.

Title	Number	Description
z/OS Communications Server: SNA Diagnosis Vol 1, Techniques and Procedures and *z/OS Communications Server: SNA Diagnosis Vol 2, FFST Dumps and the VIT*	LY43-0088 LY43-0089	These documents help you identify an SNA problem, classify it, and collect information about it before you call the IBM Support Center. The information collected includes traces, dumps, and other problem documentation.
z/OS Communications Server: SNA Data Areas Volume 1 and *z/OS Communications Server: SNA Data Areas Volume 2*	LY43-0090 LY43-0091	These documents describe SNA data areas and can be used to read an SNA dump. They are intended for IBM programming service representatives and customer personnel who are diagnosing problems with SNA.

Messages and codes:

Title	Number	Description
z/OS Communications Server: SNA Messages	SC31-8790	This document describes the ELM, IKT, IST, ISU, IUT, IVT, and USS messages. Other information in this document includes: • Command and RU types in SNA messages • Node and ID types in SNA messages • Supplemental message-related information
z/OS Communications Server: IP Messages Volume 1 (EZA)	SC31-8783	This volume contains TCP/IP messages beginning with EZA.
z/OS Communications Server: IP Messages Volume 2 (EZB)	SC31-8784	This volume contains TCP/IP messages beginning with EZB.
z/OS Communications Server: IP Messages Volume 3 (EZY)	SC31-8785	This volume contains TCP/IP messages beginning with EZY.
z/OS Communications Server: IP Messages Volume 4 (EZZ-SNM)	SC31-8786	This volume contains TCP/IP messages beginning with EZZ and SNM.
z/OS Communications Server: IP and SNA Codes	SC31-8791	This document describes codes and other information that appear in z/OS Communications Server messages.

APPC Application Suite:

Title	Number	Description
z/OS Communications Server: APPC Application Suite User's Guide	SC31-8809	This documents the end-user interface (concepts, commands, and messages) for the AFTP, ANAME, and APING facilities of the APPC application suite. Although its primary audience is the end user, administrators and application programmers may also find it useful.
z/OS Communications Server: APPC Application Suite Administration	SC31-8835	This document contains the information that administrators need to configure the APPC application suite and to manage the APING, ANAME, AFTP, and A3270 servers.
z/OS Communications Server: APPC Application Suite Programming	SC31-8834	This document provides the information application programmers need to add the functions of the AFTP and ANAME APIs to their application programs.

Redbooks

The following Redbooks may help you as you implement z/OS Communications Server.

Title	Number
TCP/IP Tutorial and Technical Overview	GG24–3376
SNA and TCP/IP Integration	SG24–5291
IBM Communications Server for OS/390 V2R10 TCP/IP Implementation Guide: Volume 1: Configuration and Routing	SG24–5227
IBM Communications Server for OS/390 V2R10 TCP/IP Implementation Guide: Volume 2: UNIX Applications	SG24–5228
IBM Communications Server for OS/390 V2R7 TCP/IP Implementation Guide: Volume 3: MVS Applications	SG24–5229
Secureway Communications Server for OS/390 V2R8 TCP/IP: Guide to Enhancements	SG24–5631
TCP/IP in a Sysplex	SG24–5235
Managing OS/390 TCP/IP with SNMP	SG24–5866
Security in OS/390–based TCP/IP Networks	SG24–5383
IP Network Design Guide	SG24–2580
Migrating Subarea Networks to an IP Infrastructure	SG24–5957
IBM Communication Controller Migration Guide	SG24–6298

Related information

For information about z/OS products, refer to *z/OS Information Roadmap* (SA22-7500). The Roadmap describes what level of documents are supplied with each release of z/OS Communications Server, as well as describing each z/OS publication.

Relevant RFCs are listed in an appendix of the IP documents. Architectural specifications for the SNA protocol are listed in an appendix of the SNA documents.

The table below lists documents that may be helpful to readers.

Title	Number
z/OS Security Server Firewall Technologies	SC24-5922
S/390: OSA-Express Customer's Guide and Reference	SA22-7403
z/OS JES2 Initialization and Tuning Guide	SA22-7532
z/OS MVS Diagnosis: Procedures	GA22-7587
z/OS MVS Diagnosis: Reference	GA22-7588
z/OS MVS Diagnosis: Tools and Service Aids	GA22-7589
z/OS Security Server LDAP Client Programming	SC24-5924
z/OS Security Server LDAP Server Administration and Use	SC24-5923
Understanding LDAP	SG24-4986
z/OS UNIX System Services Programming: Assembler Callable Services Reference	SA22-7803
z/OS UNIX System Services Command Reference	SA22-7802
z/OS UNIX System Services User's Guide	SA22-7801
z/OS UNIX System Services Planning	GA22-7800
z/OS MVS Using the Subsystem Interface	SA22-7642
z/OS C/C++ Run-Time Library Reference	SA22-7821
z/OS Program Directory	GI10-0670

Title	Number
DNS and BIND, Fourth Edition, O'Reilly and Associates, 2001	ISBN 0-596-00158-4
Routing in the Internet , Christian Huitema (Prentice Hall PTR, 1995)	ISBN 0-13-132192-7
sendmail, Bryan Costales and Eric Allman, O'Reilly and Associates, 1997	ISBN 156592–222–0
TCP/IP Tutorial and Technical Overview	GG24-3376
TCP/IP Illustrated, Volume I: The Protocols, W. Richard Stevens, Addison-Wesley Publishing, 1994	ISBN 0-201-63346-9
TCP/IP Illustrated, Volume II: The Implementation, Gary R. Wright and W. Richard Stevens, Addison-Wesley Publishing, 1995	ISBN 0-201-63354-X
TCP/IP Illustrated, Volume III, W. Richard Stevens, Addison-Wesley Publishing, 1995	ISBN 0-201-63495-3
z/OS System Secure Sockets Layer Programming	SC24-5901

Determining if a publication is current

As needed, IBM updates its publications with new and changed information. For a given publication, updates to the hardcopy and associated BookManager softcopy are usually available at the same time. Sometimes, however, the updates to hardcopy and softcopy are available at different times. The following information describes how to determine if you are looking at the most current copy of a publication:

- At the end of a publication's order number there is a dash followed by two digits, often referred to as the dash level. A publication with a higher dash level is more current than one with a lower dash level. For example, in the publication order number GC28-1747-07, the dash level 07 means that the publication is more current than previous levels, such as 05 or 04.
- If a hardcopy publication and a softcopy publication have the same dash level, it is possible that the softcopy publication is more current than the hardcopy publication. Check the dates shown in the Summary of Changes. The softcopy publication might have a more recently dated Summary of Changes than the hardcopy publication.
- To compare softcopy publications, you can check the last two characters of the publication's filename (also called the book name). The higher the number, the more recent the publication. Also, next to the publication titles in the CD-ROM booklet and the readme files, there is an asterisk (*) that indicates whether a publication is new or changed.

Summary of changes

Summary of changes
for SC31-8779-02
z/OS Version 1 Release 4

This document contains information previously presented in SC31-8779-01, which supports z/OS Version 1 Release 2.

New information

- HPRDIAG operand in the DISPLAY ID section
- PSWEIGHT syntax diagram in the MODIFY VTAMOPTS section
- DISPLAY INOPDUMP command in the VTAM operator commands section
- MODIFY INOPDUMP command in the VTAM operator commands section
- IQDIOSTG and QDIOSTG syntax diagrams in the Start options section

An appendix that provides a list of documents that contain architectural specifications for the SNA protocol has been added.

An appendix with z/OS product accessibility information has been added.

Changed information

- Storage usage summary sample display in DISPLAY BFRUSE
- STRNAME syntax and operand description in DISPLAY STATS
- LOCSIZE operand description in the DISPLAY TOPO section
- Sample display in the DISPLAY VTAMOPTS section
- NETADDR operand description in the DISPLAY VTAMSTOR section
- CSALIMIT operand description in the MODIFY CSALIMIT section
- ADJLIST operand description in the MODIFY RESOURCE section
- CSALIMIT syntax diagram in the Start options section
- UPDATE operand description in the VARY ACT section

This document contains terminology, maintenance, and editorial changes. Technical changes or additions to the text and illustrations are indicated by a vertical line to the left of the change.

Starting with z/OS V1R4, you may notice changes in the style and structure of some content in this document–for example, headings that use uppercase for the first letter of initial words only, and procedures that have a different look and format. The changes are ongoing improvements to the consistency and retrievability of information in our documents.

This document supports z/OS.e.

Summary of changes
for SC31-8779-01
z/OS Version 1 Release 2

This document contains information previously presented in SC31-8779-00, which supports z/OS Version 1 Release 1.

© Copyright IBM Corp. 1984, 2002

New information

- APPN Class of Service information in the DISPLAY COS section
- DISPLAY CPCP command section
- Text in the Purpose section of DISPLAY GRAFFIN
- ID operand and TEST operand in DISPLAY RTPS
- DISPLAY TNSTAT command section
- TDU statistics information in DISPLAY TOPO
- Sample displays in the DISPLAY TRL section
- AFFDELAY, API64R, CNNRTMSG, IQDCHPID, and VOSDEACT start options in DISPLAY VTAMOPTS, MODIFY VTAMOPTS, and Start Options sections
- TRLE operand in MODIFY NOTNSTAT command section
- ACTION and TRLE operands in MODIFY TNSTAT command section

Changed information

- Sample display information for the DISPLAY CSM and DISPLAY TOPO sections
- Sample to display all VTAM start options in the DISPLAY VTAMOPTS section
- ID=cdrsc_minor_node_name in the MODIFY CDRM section
- FIXED operand description in the MODIFY CSM section
- SCOPE description in MODIFY TRACE and MODIFY NOTRACE sections
- TYPE=GIVEBACK in the VARY INACT section
- Cross-reference for VTAM DISPLAY commands in Appendix A

This document contains terminology, maintenance, and editorial changes. Technical changes or additions to the text and illustrations are indicated by a vertical line to the left of the change.

Summary of changes
for SC31-8779-00
z/OS Version 1 Release 1

This document contains information also presented in *OS/390 V2R10 IBM Communications Server: SNA Operation*.

Chapter 1. Introducing an operator to VTAM

The most common types of operator tasks are those associated with monitoring and controlling the network. The portion of a network that you can control varies from one organization to another.

Sphere of control refers to the portion of the network you control and what operations you can perform on that portion of the network. Your sphere of control is limited by any restrictions on which portions of the network you can affect and which commands you can issue. Within your sphere of control, you can both monitor and control VTAM's domain. This means that you can view what is happening in your network and make changes to network status as needed.

Your individual network will differ from that of other operators. The following sections about monitoring and controlling VTAM's domain include a few examples of results of commands issued by an operator in the sample network.

Assume the sample network consists of the resources shown in Figure 2 on page 2. This picture shows:

- Two sessions. One is between application CICS01 and logical unit L3A3767A. The other is between CICS01 and logical unit L3A3278A.
- Two cluster controllers. They are physical units P3A3767A and P3A3274A.
- Four workstations, identified as LUs.

© Copyright IBM Corp. 1984, 2002

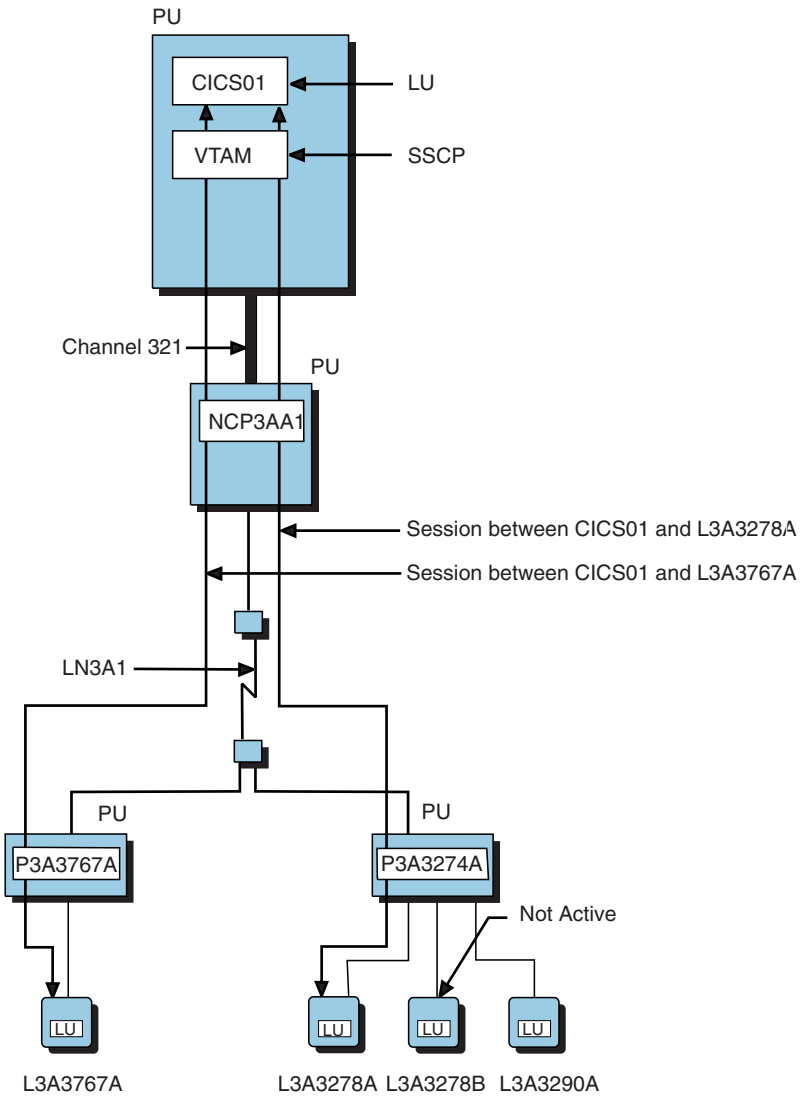

Figure 2. Sample VTAM network

Monitoring VTAM

The term ***monitor*** means to watch something change, in order to ensure that the network is operating as planned. As you monitor VTAM, you can check on the status of the sessions between resources by using the various DISPLAY commands. A DISPLAY command enables VTAM to show information on your workstation screen.

This chapter does not provide details of what each of the commands can do. You can find details about specific commands in Chapter 2, “VTAM operator commands” on page 9.

The DISPLAY commands let you see the status of the network or its resources. Status shows whether the network or its individual resources are up (active) or

down (inactive). DISPLAY commands also provide information on which resources have been defined to VTAM and where they are in the network hierarchy.

The following example illustrates the use of a DISPLAY command. The operator for the sample network shown in Figure 2 on page 2 enters the following DISPLAY command:

```
d net,id=CICS01,scope=all
```

Note: VTAM allows the operator to use the abbreviation “d” instead of “DISPLAY” in the command DISPLAY NET,ID=CICS01,SCOPE=ALL.

Within this chapter, the abbreviated forms of commands (d=DISPLAY, v=VARY, and f=MODIFY) are used. VTAM accepts commands in either lowercase or uppercase.

The displays shown in the scenarios might differ from what you would see in your network. For example, if the MSGMOD=YES start option is specified in your network, the output would differ from these samples, which reflect MSGMOD=NO.

When you enter this command, VTAM shows all active sessions with the CICS01 application program. Details about this and other commands used in this scenario are provided in Chapter 2, “VTAM operator commands” on page 9.

The display shows VTAM’s response:

```
d net,id=CICS01,scope=all
IST097I DISPLAY ACCEPTED
IST075I NAME = NETA.CICS01, TYPE = APPL
IST486I STATUS= ACT/S, DESIRED STATE= ACTIV
IST977I MDLTAB=***NA*** ASLTAB=***NA***
IST861I MODETAB=***NA*** USSTAB=***NA*** LOGTAB=***NA***
IST934I DLOGMOD=***NA*** USS LANGTAB=***NA***
IST597I CAPABILITY-PLU ENABLED  ,SLU ENABLED  ,SESSION LIMIT NONE
IST231I APPL MAJOR NODE = APPL1A
IST654I I/O TRACE = OFF, BUFFER TRACE = OFF
IST271I JOBNAME = ECHO, STEPNAME = ECHO, DSPNAME = 0AAACIST
IST228I ENCRYPTION = OPTIONAL, TYPE = DES
IST1050I MAXIMUM COMPRESSION LEVEL - INPUT = 0, OUTPUT = 0
IST171I ACTIVE SESSIONS = 0000000002, SESSION REQUESTS = 0000000000
IST206I SESSIONS:
IST634I NAME     STATUS         SID          SEND RECV VR TP NETID
IST635I L3A3278A ACTIV-S    EAABEEC3FF8D8965 0000 0000  4  0  NETA
IST635I L3A3767A ACTIV-P    F6ABEEC3028D8998 0000 0000  4  0  NETA
IST314I END
```

Note: The highlighted fields and values in this and later samples are explained in the text.

In this display:

- IST486I indicates that the application program is active with sessions (ACT/S) and that the desired state for this application program is active.
- IST171I shows that there are two sessions with this application program and that no session requests are pending.

- IST635I lists the logical units that are in session with this application program.

In your network, you can also display information about physical and logical resources, check to see whether your domain's VTAM is connected to any other VTAM domains, and view routes (logical connections) that are being used.

The operator enters another DISPLAY command as follows:

```
d net,id=LN3A1,scope=all
```

The operator uses this command to display line LN3A1 and the resources that are attached to the line.

The display shows VTAM's response:

```
d net,id=LN3A1,scope=all
IST097I DISPLAY ACCEPTED
IST075I NAME = LN3A1, TYPE = LINE
IST486I STATUS= ACTIV, DESIRED STATE= ACTIV
IST087I TYPE = LEASED             , CONTROL = SDLC
IST134I GROUP = GRP3A1,   MAJOR NODE = NCP3AA1
IST084I NETWORK NODES:
IST089I P3A3767A TYPE = PHYSICAL UNIT    , ACTIV
IST089I L3A3767A TYPE = LOGICAL UNIT     , ACTIV
IST089I P3A3274A TYPE = PHYSICAL UNIT    , ACTIV
IST089I L3A3278A TYPE = LOGICAL UNIT     , ACTIV
IST089I L3A3278B TYPE = LOGICAL UNIT     , NEVAC
IST089I L3A3290A TYPE = LOGICAL UNIT     , ACTIV
IST314I END
```

In this display:

- IST087I indicates that the line is a leased (nonswitched) line.
- IST089I shows two physical units and four logical units attached to the communication controller.
- One of the logical units (L3A3278B) has never been activated (NEVAC).

The operator enters another DISPLAY command as follows:

```
d net,id=L3A3278B,scope=all
```

VTAM displays the following information about logical unit L3A3278B:

```
d net,id=L3A3278B,scope=all
IST097I DISPLAY ACCEPTED
IST075I NAME = NETA.L3A3278B, TYPE = LOGICAL UNIT
IST486I STATUS= NEVAC, DESIRED STATE= INACT
IST977I MDLTAB=***NA*** ASLTAB=***NA***
IST861I MODETAB=MODETAB2 USSTAB=***NA*** LOGTAB=***NA***
IST934I DLOGMOD=***NA*** USS LANGTAB=***NA***
IST597I CAPABILITY-PLU INHIBITED,SLU INHIBITED,SESSION LIMIT 00000001
IST081I LINE NAME = LN3A1, LINE GROUP = GRP3A1, MAJNOD = NCP3AA1
IST135I PHYSICAL UNIT = P3A3274A
IST082I DEVTYPE = LU
IST654I I/O TRACE = OFF, BUFFER TRACE = OFF
IST228I ENCRYPTION = NONE, TYPE = DES
IST171I ACTIVE SESSIONS = 0000000000, SESSION REQUESTS = 0000000000
IST172I NO SESSIONS EXIST
IST314I END
```

In this display, IST486I indicates that the current state of the logical unit is NEVAC, which means the logical unit was never activated, and that the desired state is INACT. It indicates that VTAM is not attempting to activate its subordinate resources because no request was made to do so.

Controlling VTAM

The term ***control***, within VTAM, means that VTAM can be started or stopped, or that VTAM and the network resources can be changed. The types of commands that you use to start, stop, or change VTAM are:

- START
- HALT
- VARY
- MODIFY

Starting VTAM

You use the START command to activate VTAM. This command uses some defaults set by the system programmer (as part of the network definition). When you use the START command, you might be required to enter changes or additions to the defaults. If this is the case, your system programmer can tell you what commands to enter.

The defaults for the START command are contained in the configuration list and start list that are defined by the system programmer. The ***configuration list*** contains a list of VTAM resources. VTAM uses this list to find out what resources to activate when VTAM is first started. A network can have more than one configuration list; this allows different configurations to be brought up at start time.

The ***start list*** contains VTAM operating system options. For example, it defines how storage is to be used and indicates whether VTAM suppresses or shows messages. The start list also identifies which configuration list is to be used for startup.

Stopping VTAM

The HALT commands allow you to shut down (deactivate) the network.

The different versions of HALT commands cause varying degrees of disruption to a network. In selecting which HALT command to use, be sure to check your local operating procedure to ensure that you use the appropriate command for your situation.

One reason for being cautious with use of the HALT command is that you could interrupt productive work for everyone using the system. The results of halting VTAM are similar to disconnecting all phone lines for an office building.

Changing VTAM with VARY commands

One way you can change VTAM is by using a VARY command. The VARY commands affect the status of each physical resource and session. They enable you to activate and deactivate individual resources or sessions. In addition to allowing you to change the status of all resources, the VARY commands let you change VTAM internal operations, such as path definitions.

In an earlier scenario, the inactive logical unit L3A3278B was shown as being downstream from NCP3AA1. To review the status of this LU, the operator enters:

```
d net,id=L3A3278B,scope=all
```

The display shows that the logical unit is still inactive.

```
d net,id=L3A3278B,scope=all
IST097I DISPLAY ACCEPTED
IST075I NAME = NETA.L3A3278B, TYPE = LOGICAL UNIT
IST486I STATUS= NEVAC, DESIRED STATE= INACT
IST977I MDLTAB=***NA*** ASLTAB=***NA***
IST861I MODETAB=MODETAB2 USSTAB=***NA*** LOGTAB=***NA***
IST934I DLOGMOD=***NA*** USS LANGTAB=***NA***
IST597I CAPABILITY-PLU INHIBITED,SLU INHIBITED,SESSION LIMIT 00000001
IST081I LINE NAME = LN3A1, LINE GROUP = GRP3A1, MAJNOD = NCP3AA1
IST135I PHYSICAL UNIT = P3A3274A
IST082I DEVTYPE = LU
IST654I I/O TRACE = OFF, BUFFER TRACE = OFF
IST228I ENCRYPTION = NONE, TYPE = DES
IST171I ACTIVE SESSIONS = 0000000000, SESSION REQUESTS = 0000000000
IST172I NO SESSIONS EXIST
IST314I END
```

To activate the previously inactive logical unit, the operator enters:

```
v net,act,id=L3A3278B
```

The display shows:

```
v net,act,id=L3A3278B
IST097I VARY ACCEPTED
IST093I L3A3278B ACTIVE
```

If the operator reissues the DISPLAY command, the display changes as shown:

```
d net,id=L3A3278B,scope=all
IST097I DISPLAY ACCEPTED
IST075I NAME = NETA.L3A3278B, TYPE = LOGICAL UNIT
IST486I STATUS= ACTIV, DESIRED STATE= ACTIV
IST977I MDLTAB=***NA*** ASLTAB=***NA***
IST861I MODETAB=MODETAB2 USSTAB=***NA*** LOGTAB=***NA***
IST934I DLOGMOD=***NA*** USS LANGTAB=***NA***
IST597I CAPABILITY-PLU INHIBITED,SLU ENABLED  ,SESSION LIMIT 00000001
IST081I LINE NAME = LN3A1, LINE GROUP = GRP3A1, MAJNOD = NCP3AA1
IST135I PHYSICAL UNIT = P3A3274A
IST082I DEVTYPE = LU
IST654I I/O TRACE = OFF, BUFFER TRACE = OFF
IST228I ENCRYPTION = NONE, TYPE = DES
IST171I ACTIVE SESSIONS = 0000000000, SESSION REQUESTS = 0000000000
IST172I NO SESSIONS EXIST
IST314I END
```

In this display, IST486I indicates that the desired and current states are now active.

Changing VTAM with MODIFY commands

You can use the MODIFY commands to change the start list options and other operating system options, such as: mode table definitions, how storage is to be used, and what type of trace is to be used.

To display an input or output (I/O) trace for the host PU specified in the start options (in this case, ISTPUS), the operator enters:

```
d net,id=ISTPUS,scope=all
```

The display shows:

```
d net,id=ISTPUS,scope=all
IST097I DISPLAY ACCEPTED
IST075I NAME = ISTPUS, TYPE = PU T4/5 060
IST486I STATUS= ACTIV, DESIRED STATE= ACTIV
IST596I IRN TRACE = OFF
IST1656I VTAMTOPO = INCLUDE, NODE REPORTED - YES
IST484I SUBAREA = 1
IST925I DYNAMIC PATH DEFINITION PATH1A STATUS = ACTIV
IST654I I/O TRACE = OFF, BUFFER TRACE = OFF
IST1500I STATE TRACE = OFF
IST170I LINES:
IST080I 091C-L   ACTIV----I
IST314I END
```

To start the trace, the operator enters:

```
f net,trace,type=io,id=istpus
```

Note: The abbreviation for MODIFY is “f” and the procedure name (procname) is NET. See “Command fundamentals” on page 9 for an explanation about the purpose and use of procname.

The display shows:

```
f net,trace,type=io,id=istpus
IST097I MODIFY ACCEPTED
IST1515I IO TRACE ACTIVE
IST513I TRACE INITIATED FOR NODE ISTPUS
IST315I VTAM INTERNAL TRACE ACTIVE - MODE = INT, SIZE = 200 PAGES 066
IST199I OPTIONS = API APPC CFS CIO CMIP CSM ESC HPR LCS LOCK MSG NRM
IST199I OPTIONS = PIU PSS SMS SSCP TCP VCNS XBUF XCF
IST315I VTAM INTERNAL TRACE ACTIVE - MODE = EXT, SIZE = 002 BUFFERS
IST199I OPTIONS = NONE
IST314I END
```

If the operator reissues the DISPLAY command, the display changes:

```
d net,id=ISTPUS,scope=all
IST097I DISPLAY ACCEPTED
IST075I NAME = ISTPUS, TYPE = PU T4/5 070
IST486I STATUS= ACTIV, DESIRED STATE= ACTIV
IST596I IRN TRACE = OFF
IST1656I VTAMTOPO = INCLUDE, NODE REPORTED - YES
IST484I SUBAREA = 1
IST925I DYNAMIC PATH DEFINITION PATH1A STATUS = ACTIV
IST654I I/O TRACE = ON, BUFFER TRACE = OFF
IST1500I STATE TRACE = OFF
IST170I LINES:
IST080I 091C-L   ACTIV----I
IST314I END
```

Chapter 2. VTAM operator commands

This chapter is a reference to VTAM operator commands. It provides a description of the format and the applicable operands of each command. The commands are arranged alphabetically.

Command fundamentals

A VTAM operator command consists of the command name or its abbreviation, and various operands that describe the operation to perform. Each VTAM operator command has a procedure name, referred to as *procname* in the command syntax, which tells the operating system to route the command to VTAM for processing. Values for *procname* vary according to the command and the operating system but *procname* must always appear as the first operand of a command.

For example, the following command includes the verb (DISPLAY) and the procname (NET):

```
DISPLAY NET,LMTBL,ID=applname,TYPE=LUNAME,LUNAME=luname
```

- The value of *procname* for VTAM commands, other than the MODIFY command, is **NET**.
- The value of *procname* for the MODIFY commands depends on the value specified in the START command:
  - If *procname* was specified in the START command in the form *startname.ident*, where *startname* is the name of the VTAM start procedure and *ident* is an optional procedure name identifier, then *procname* can be specified as either *startname.ident* or simply *ident* for the MODIFY command.

    For example, if the specification in the START command uses the .ident extension (NETID.ident), then the MODIFY command can use either of the following specifications:

    ```
    MODIFY NETID.ident,NOTRACE,TYPE=BUF,ID=name,SCOPE=ONLY

    MODIFY ident,NOTRACE,TYPE=BUF,ID=name,SCOPE=ONLY
    ```
  - If *procname* was specified in the START command in the form *startname*, where *startname* is the name of the VTAM start procedure, then it must also be specified as *startname* for the MODIFY command.

    So, if the *procname* specified in the START command is NETID, the MODIFY command shown in the following sample must also have the same *procname* specification:

    ```
    MODIFY NETID,NOTRACE,TYPE=BUF,ID=name,SCOPE=ONLY
    ```

To avoid needless repetition, the NET operand is not described for every command. However, for MODIFY commands whose *procname*s depend upon the type of operating system used, each possibility is described.

Entering operator commands

Operator commands are entered and VTAM messages are received at the system console or the remote network console.

VTAM operator commands and their formats are described later in this chapter.

The length of a VTAM operator command that can be entered at a console is limited by operator command input devices, certain operator application programs,

© Copyright IBM Corp. 1984, 2002

the VTAM program operator interface, and VTAM itself. In most cases, VTAM requires operator commands to be entered on a single input line. Two exceptions are:

- If you need to enter more start options than will fit on one input line, end the line with a comma. Then VTAM prompts you for additional start options.
- If a command that exceeds VTAM's command length limit is entered on the input line, the command is rejected even though it might fit on the input line. A message indicating the additional length limitation imposed by VTAM is issued.

  VTAM's command length limit can be reduced if PPOLOG=YES is specified in the START or MODIFY PPOLOG commands.

Valid and not valid commands

VTAM issues messages that tell you whether the commands you entered were accepted or rejected. The acceptance of a command does not imply command completion. When a command is entered correctly, with valid operands, VTAM issues a message of acknowledgment. If a syntax error is made in entering a command, VTAM issues one or more error messages and rejects the command.

See *z/OS Communications Server: SNA Messages* for an explanation of error messages you might encounter.

Command verification exit routine

VTAM allows you to use a command verification exit routine (ISTCMMND) to screen and manipulate commands issued by a VTAM operator. (The term operator includes a program operator.) The primary purpose of this installation-wide exit routine is to screen command requests that impact critical nodes in the network.

See the "MODIFY EXIT command" on page 322 for information about modifying an installation-wide exit routine. See *z/OS Communications Server: SNA Customization* for information about the command verification exit routine.

Controlling operator messages

The message-flooding prevention facility identifies and suppresses duplicate messages which could overrun the operator console and conceal critical information. VTAM bases its suppression on the similarity of variable text in an original and subsequent message and a specified time interval between the two messages.

VTAM provides an external message-flooding prevention table that can be modified with the FLDTAB, FLDENT, and FLDEND macros. Using the FLDTAB start option or the MODIFY TABLE command, you can tell VTAM to use the default table supplied by IBM, use a user-defined table, or deny message-flooding prevention.

Note: You can only specify one message-flooding prevention table per VTAM.

The message-flooding prevention table identifies a list of messages that are candidates for flooding suppression. For each candidate message, the table identifies the criteria that must be met before VTAM suppresses duplicate messages. The suppression criteria include:

- The amount of time between the original and subsequent message
- An indication of which variable text fields are to be compared
- Whether a message is suppressed from the system hardcopy log

If the message is reissued within the specified time interval and the specified variable text fields contain the same information, VTAM suppresses the message.

You do not have to code anything to get message-flooding prevention; VTAM uses an internal default table when VTAM is initialized. To specify a user-defined table, code the name of that table under the FLDTAB start option. This table is built dynamically when VTAM is initialized. If errors are found while building the table, VTAM issues a message indicating that the table has errors and uses the internal default table. If you code FLDTAB=NONE as a start option, VTAM does not provide any message-flooding prevention.

You can also use the MODIFY TABLE command to replace the table, or to change or delete resource associations to the table without affecting other VTAM operations. While VTAM is building the new message-flooding prevention table, it uses the current table. When VTAM verifies that the new table has been successfully built, VTAM replaces the existing table and begins using the new table. If you issue the MODIFY TABLE command to build a message-flooding prevention table, and there are fatal errors in the table, VTAM continues using the previous message-flooding prevention table (if one was in use) until the new table successfully builds.

While you are using a message-flooding prevention table, be aware of the effect on problem determination. If a command is issued twice within the time span specified in the message-flooding prevention table, any message sent to the operator by that command that is also a member of the table is suppressed for the second command. Because the table prevents messages from being issued by VTAM, this could affect CLISTS or automated operations facilities.

For messages that are part of a message group, VTAM searches the message-flooding prevention table for the header message of the group. If the header message is found and meets the suppression criteria, VTAM suppresses the whole message group. If the header message is not found in the table, VTAM will not suppress any message in the message group, including those that are listed in the table.

Using wildcard names

A wildcard is a character used to represent an unspecified resource name or an unspecified part of a resource name. It is used by the VTAM operator to broaden the scope of a display or to find the name of a resource. Depending on the value of the DSPLYWLD start option, the use of wildcards might be allowed in the value specified for the ID operand of the following DISPLAY commands:

DISPLAY APPLS
DISPLAY CDRMS
DISPLAY CDRSCS
DISPLAY CLSTRS
DISPLAY CPCP
DISPLAY GROUPS
DISPLAY LINES
DISPLAY RSCLIST
DISPLAY STATIONS
DISPLAY TERMS
DISPLAY TGPS
DISPLAY TOPO
DISPLAY TRACES

Notes:

1. For most of the referenced DISPLAY commands, the ID operand identifies the name of a major node. The use of wildcards in the value of the ID operand

does not extend the display to include subordinate nodes. To display the subordinate nodes, use the DISPLAY RSCLIST command with the IDTYPE operand.

2. Multiple wildcards are not allowed on the DISPLAY TOPO command.

The use of wildcards is also allowed in the value specified for the EXCLUDE operand of the DISPLAY RSCLIST command, and in the values specified for the LU and GNAME operands of the DISPLAY GRAFFIN command.

Attention: Specifying a wildcard name might degrade performance because VTAM checks every resource of a particular type in the network, depending on the command and operands issued.

VTAM recognizes two wildcard characters for these commands:

asterisk (*)
Represents a string of unspecified characters

question mark (?)
Represents a single unspecified character.

Following are several examples of how wildcard names are used with the DISPLAY RSCLIST command:

ID=* Displays all resource names

ID=APP*
Displays resource names that start with *APP*

ID=*01
Displays resource names that end with *01*

ID=APPL*01
Displays resource names that begin with *APPL* and end with *01*

ID=APPL0??
Displays resource names that begin with *APPL0* followed by exactly two characters

ID=A*P?1
Displays resource names that start with *A* and end with *Px1* where *x* is any single character

ID=?APP*
Displays resource names that begin with any single character followed by *APP* and followed by any other characters

ID=??*
Displays resource names of two or more characters

ID=(AA00,APP*,*01)
Displays the first resource, then all resource names that start with *APP*, then all resources names that end with *01*.

Following are several examples of how wildcard names can be used with network-qualified names (DISPLAY RSCLIST, DISPLAY TOPO, and DISPLAY TRACES,TYPE=NODES commands):

ID=NETA.APP*
Displays resource names in NETA that begin with *APP*

ID=NET*.A*
Displays resource names that start with *A* and have a network-qualified name that begins with *NET*

ID=N*A.A01
Displays all resources with the name *A01* with a network-qualified name that begins with *N* and ends with *A*

ID=NETA.*
Displays all resources in NETA

ID=*.??
Displays resources in any network with exactly two characters

ID=(A*,NETB.AP*,APPL2,*.T??)
Displays:
- Resource names that begin with *A*
- Resource names in NETB that begin with *AP*
- APPL2
- Resources in any network whose name begins with *T* followed by exactly two characters

Using MVS system symbols

You can use the following MVS system symbols in the values you specify on VTAM network operator commands:

&SYSCLONE
Represents a 1–2-character shorthand notation for the name of the system

&SYSNAME
Represents a 1–8-character system name

&SYSPLEX
Represents a 1–8-character sysplex name

&SYSR1
Represents a 1–6-character sysres volume

&installation-defined system symbol
Represents a 1–8-character identifier. You can define this symbol to be any identifier you want.

The substitution text for these system symbols is defined in MVS and is substituted by MVS in place of the symbols when commands are processed. Refer to *z/OS MVS Initialization and Tuning Reference* for information about how to define the symbols in MVS.

MVS system symbols can be used to eliminate the need to know the exact name of a resource on the system from which a command is issued.

Unformatted system services (USS) command syntax

The unformatted system services (USS) table defines the format or syntax of commands that the operator enters. USS commands that can be found in this table include all:
- DISPLAY commands
- MODIFY commands
- VARY commands

When one of the preceding commands is entered by a VTAM operator (including a program operator), USS does the following:

- Supplies default values for omitted operands.
- Detects duplicate or conflicting operands. In either case the command is rejected and an error message is issued.
- Converts abbreviations or user-defined keywords into keywords acceptable to VTAM command processors. For example, if OPT=CIO is entered on the MODIFY TRACE command, USS converts it to OPTION=CIO because OPT is defined as an abbreviation for the OPTION operand.

The command conversions that are to be done by USS are defined in the IBM-supplied USS table, ISTINCNO. The system programmer can supply a modified syntax for these commands by using USS facilities. If the syntax of a command has been changed, it is the responsibility of the system programmer to supply the operator with an explanation of the new command syntax. For more information on USS tables, see the *z/OS Communications Server: SNA Resource Definition Reference*.

Enter the procedure name or *procname* as the first operand in a USS command. You can enter additional operands in any order. Exceptions to this include operands that normally contain a keyword, but can be abbreviated with a single value (for example, SCOPE=ALL can be abbreviated as ALL on the VARY ACT command and TYPE=IMMED can be abbreviated as IMMED or I on the VARY INACT command). In cases when an operand is coded using an abbreviation and the abbreviation does not include the keyword, the operand must not immediately follow the procedure name.

DISPLAY ADJCLUST command

```
►►──DISPLAY NET,ADJCLUST──┬──────────────────┬──┬──────────────────────────┬──────────────►◄
                          └─,NETID=netid─────┘  │ ┌─,SCOPE=ONLY──────────┐ │
                                                └─,SCOPE=──┬─ONLY─┬──────┘ │
                                                           └─ALL──┘
```

Abbreviations

Operand	Abbreviation
DISPLAY	D
SCOPE=ALL	EVERY or E
SCOPE=ONLY	NONE or N

When using an abbreviation in place of an operand, code the abbreviation exactly as shown in the table. For example, when coding the abbreviation for SCOPE=ALL, code only EVERY or E. Do not code SCOPE=E.

Purpose

The DISPLAY ADJCLUST (adjacent cluster table) command displays the adjacent cluster (routing) tables and their entries in the order to be used for APPN searches. The entries in the tables include all user-defined entries, along with any dynamic entries that have been added, based on the current value of the BNDYN start option.

Note: The order of the entries for a search can be affected by APPN directory entries and the directory services management exit.

Operands

NETID=netid
Specifies the destination network for the adjacent cluster table to be displayed.

SCOPE
Determines the range of adjacent cluster tables to be displayed.

SCOPE=ALL
Specifies that all adjacent cluster tables are to be displayed. This option is ignored if the NETID operand is specified.

SCOPE=ONLY

- If the NETID operand is specified, VTAM displays adjacent cluster definitions that match the destination network.
- If the NETID operand is not specified, VTAM displays adjacent cluster definitions for the default destination network.

Resulting display

The resulting display shows whether the table is a user-defined, default, or dynamically-built table, the level of dynamics used for the table, and the status of each entry. Defined entries are displayed regardless of their current status. If a defined entry is displayed as inactive, it will not be included in a search. Dynamic entries are displayed only if they are active.

- A user-defined table indicates that adjacent cluster definition statements exist for the specified NETID.
- A default routing table is used when no defined entries exist for the specified NETID, but a default table has been coded. A default table indicates how to route requests when the specified NETID is not defined.
- A dynamically-built routing table is created when no defined or default routing table exists. This table is created completely from active dynamic routing information.

Examples

Displaying the user-defined adjacent cluster table for a specific network:

```
d net,adjclust,netid=neta
IST097I DISPLAY ACCEPTED
IST350I DISPLAY TYPE = ADJACENT CLUSTER TABLE
IST1325I DEFINED TABLE FOR NETA           DYNAMICS = LIMITED
IST1326I CP NAME           TYPE    STATE      STATUS       SNVC
IST1327I NETA.BN3          DEFINED ACTIVE     FOUND        003
IST1327I NETA.BN2          DEFINED NOT ACTIVE NOT SEARCHED 003
IST1327I NETA.BN1          DYNAMIC ACTIVE     NOT SEARCHED N/A
IST314I END
```

Displaying a default adjacent cluster table for a specific network:

```
d net,adjclust,netid=netb
IST097I DISPLAY ACCEPTED
IST350I DISPLAY TYPE = ADJACENT CLUSTER TABLE
IST1325I DEFAULT TABLE FOR NETB           DYNAMICS = LIMITED
IST1326I CP NAME           TYPE    STATE      STATUS       SNVC
IST1327I NETB.BN4          DEFINED ACTIVE     NOT SEARCHED 004
IST1327I NETB.BN5          DYNAMIC ACTIVE     NOT SEARCHED 003
IST314I END
```

Displaying a dynamically-built adjacent cluster table:

```
d net,adjclust,netid=netc
IST097I DISPLAY ACCEPTED
IST350I DISPLAY TYPE = ADJACENT CLUSTER TABLE
IST1325I DYNAMIC TABLE FOR NETC           DYNAMICS = LIMITED
IST1326I CP NAME           TYPE    STATE      STATUS       SNVC
IST1327I NETC.BN6          DYNAMIC ACTIVE     FOUND        003
IST314I END
```

DISPLAY ADJCP command

```
►►──DISPLAY NET,ADJCP──,ID=adjacent_cp_name──┬─,SCOPE=ONLY──────────┬──────────────────►◄
                                             └─,SCOPE=──┬─ALL──┬────┘
                                                        └─ONLY─┘
```

Abbreviations

Operand	Abbreviation
DISPLAY	D
SCOPE=ALL	EVERY or E
SCOPE=ONLY	NONE or N

When using an abbreviation in place of an operand, code the abbreviation exactly as shown in the table. For example, when coding the abbreviation for SCOPE=ALL, code only EVERY or E. Do not code SCOPE=E.

Purpose

The DISPLAY ADJCP (adjacent control point) command displays the attributes of a specific adjacent node and the connections in which it is currently involved.

Note: With high performance routing (HPR), a control point does not have to be physically adjacent to be displayed by this command. Each endpoint of an RTP connection considers the other endpoint an adjacent control point, even though there may be intermediate ANR-capable nodes between the two endpoints.

This command is valid only when it is issued at an APPN node (network node, end node, interchange node, or migration data host).

Operands

ID=adjacent_cp_name
Specifies the network-qualified name of the adjacent control point. If the network identifier is not provided, it is assumed to be the issuing network's network identifier. You can specify * (or *NETWORK) as the network ID portion of a network-qualified adjacent CP name in order to display adjacent CPs that do not currently have a network identifier assigned to them. For example, the following command is valid if A01N currently does not have a network ID associated with it:

```
D NET,ADJCP,ID=*.a01n
```

SCOPE
Specifies the desired scope of the display.

SCOPE=ONLY
Displays the status and the major node name for the adjacent control point.

SCOPE=ALL
Displays the status, the major node name, the node type, and detailed connection information for the adjacent control point.

Resulting display

The resulting VTAM display shows:

- For SCOPE=ONLY, the status and the major node name for the adjacent control point.
- For SCOPE=ALL:
  - Status of the adjacent CP
  - Major node name
  - Node type
  - Number of connections
  - Number of CP-CP capable connections
  - An indication of whether the node being displayed is in the same subnetwork as the node where you are issuing the display
  - Resource name and status
  - TG number
  - An indication of CP-CP session capability
  - TG characteristics
  - Rapid transport protocol (RTP) summary

For a byte-by-byte explanation of the TG characteristics, see the “DISPLAY TGPS command” on page 230.

Examples

Displaying an adjacent CP:

```
d net,adjcp,id=a01n,scope=only
IST097I DISPLAY ACCEPTED
IST350I DISPLAY TYPE = ADJACENT CONTROL POINT
IST486I STATUS= ACTIV, DESIRED STATE= ACTIV
IST1197I ADJCP MAJOR NODE = ISTADJCP
IST314I END
```

Displaying detailed information for a physically adjacent CP with no RTP connection:

```
d net,adjcp,id=sscpaa,scope=all
IST097I DISPLAY ACCEPTED
IST350I DISPLAY TYPE = ADJACENT CONTROL POINT
IST486I STATUS= ACTIV, DESIRED STATE= ACTIV - TRACE= OFF
IST1197I ADJCP MAJOR NODE = ISTADJCP
IST1101I ADJCP DISPLAY SUMMARY FOR NETA.SSCPAA
IST1102I NODENAME          NODETYPE CONNECTIONS CP CONNECTIONS N
IST1103I NETA.SSCPAA        NN        1           1            *
IST1104I CONNECTION SUMMARY FOR NETA.SSCPAA
IST1105I RESOURCE STATUS TGN CP-CP TG CHARACTERISTICS
IST1106I PU1A7B4  AC/R    21 YES   988D000000000000000017100808
IST1493I RTP SUMMARY FOR NETA.SSCPAA COUNT = 0
IST172I NO RTPS FOUND
IST314I END
```

Displaying detailed information for a physically adjacent CP with an RTP connection:

```
d net,adjcp,id=sscp2a,scope=all
IST097I DISPLAY ACCEPTED
IST350I DISPLAY TYPE = ADJACENT CONTROL POINT 396
IST486I STATUS= ACT/S, DESIRED STATE= ACTIV
IST1197I ADJCP MAJOR NODE = ISTADJCP
IST1101I ADJCP DISPLAY SUMMARY FOR NETA.SSCP2A
```

```
IST1102I NODENAME          NODETYPE CONNECTIONS CP CONNECTIONS NATIVE
IST1103I NETA.SSCP2A        NN        1           1            *NA*
IST1104I CONNECTION SUMMARY FOR NETA.SSCP2A
IST1105I RESOURCE STATUS TGN CP-CP TG CHARACTERISTICS
IST1106I AHHCPU1  AC/R    21 YES   988D000000000000000014C00808080
IST1500I STATE TRACE = OFF
IST1493I RTP SUMMARY FOR NETA.SSCP2A COUNT = 1
IST1486I   RTP NAME   STATE            DESTINATION CP     MNPS  TYPE
IST1487I   CNR00001   CONNECTED        NETA.SSCP2A        NO    CPCP
IST314I END
```

Displaying detailed information for a CP that is not physically adjacent, but has an RTP connection:

```
d net,adjcp,id=sscpaa,scope=all
IST097I DISPLAY ACCEPTED
IST350I DISPLAY TYPE = ADJACENT CONTROL POINT
IST486I STATUS= ACTIV, DESIRED STATE= ACTIV - TRACE= OFF
IST1197I ADJCP MAJOR NODE = ISTADJCP
IST1101I ADJCP DISPLAY SUMMARY FOR NETA.SSCPAA
IST1102I NODENAME          NODETYPE CONNECTIONS CP CONNECTIONS N
IST1103I NETA.SSCPAA        NN        0           0            *
IST1104I CONNECTION SUMMARY FOR NETA.SSCPAA
IST172I NO CONNECTIONS FOUND
IST1493I RTP SUMMARY FOR NETA.SSCPAA COUNT = 1
IST1493I RTP SUMMARY FOR NETA.SSCPAA COUNT = 2
IST1486I   RTP NAME   STATE            DESTINATION CP     MNPS  TYPE
IST1487I   CNR00001   CONNECTED        NETA.SSCPAA        NO    CPCP
IST314I END
```

DISPLAY ADJSSCPS command

Display user-defined and dynamic adjacent SSCP tables:

```
►►──DISPLAY NET,ADJSSCPS──┬──────────────────────────┬──────────────────────────────►
                          └─,CDRM=sscp_name──────────┘

►──┬─,MAX=DSPLYDEF_start_option_value──┬──┬──────────────┬──────────────────────────►
   │                                   │  └─,NETID=netid─┘
   └─,MAX=──┬─*──────────────────────┬──┘
            └─number_of_resources────┘

►──┬─,SCOPE=ONLY──────────────┬──────────────────────────────────────────────────►◄
   │                          │
   └─,SCOPE=──┬─ALL──────────┬──┘
              │              │
              ├─ALL──────────┤
              └─ONLY─────────┘
```

Display the adjacent SSCP table for a specific cross-domain resource:

```
►►──DISPLAY NET,ADJSSCPS──,CDRSC=cdrsc_name──────────────────────────────────────►

►──┬─,MAX=DSPLYDEF_start_option_value──┬──────────────────────────────────────►◄
   │                                   │
   └─,MAX=──┬─*──────────────────────┬──┘
            └─number_of_resources────┘
```

Display a specific list of adjacent CDRMs used for session requests:

```
►►──DISPLAY NET,ADJSSCPS──,ADJLIST=list_name──────────────────────────────────────►

►──┬─,MAX=DSPLYDEF_start_option_value──┬──────────────────────────────────────►◄
   │                                   │
   └─,MAX=──┬─*──────────────────────┬──┘
            └─number_of_resources────┘
```

Display all lists of adjacent CDRMs:

```
►►──DISPLAY NET,ADJSSCPS──,ADJLIST=*──┬─,MAX=DSPLYDEF_start_option_value──┬──────►◄
                                      │                                   │
                                      └─,MAX=──┬─*──────────────────────┬──┘
                                               └─number_of_resources────┘
```

Abbreviations

Operand	Abbreviation
DISPLAY	D
SCOPE=ALL	EVERY or E

Operand	Abbreviation
SCOPE=ONLY	NONE or N

When using an abbreviation in place of an operand, code the abbreviation exactly as shown in the table. For example, when coding the abbreviation for SCOPE=ALL, code only EVERY or E. Do not code SCOPE=E.

Purpose

The DISPLAY ADJSSCPS (adjacent system services control points) command displays user-defined and dynamically built adjacent SSCP tables and user-defined adjacent CDRM lists. If a user-defined adjacent SSCP table or CDRM list exists, VTAM displays information from that table or list. If no user-defined table exists, or if there is a table, but it does not contain any applicable entries, VTAM displays information from the dynamic adjacent SSCP table.

If you specify a CDRSC on this command, VTAM displays the dynamic adjacent SSCP table for the cross-domain resource, along with status information for the resource.

Operands

ADJLIST
Specifies that one or more lists of adjacent CDRMs are to be displayed. If you specify ADJLIST, do not specify any other operands on the command.

ADJLIST=list_name
Displays the list of adjacent CDRMs identified by *list_name*.

ADJLIST=*
Displays all lists of adjacent CDRMs.

CDRM=sscp_name
Specifies that information is to be displayed about the adjacent SSCP table or tables for the specified CDRM. The *sscp_name* may not be a network-qualified name; however, you can use the NETID operand to specify the network. If you specify CDRM, do not specify CDRSC on the same command.

CDRSC=cdrsc_name
Specifies that information is to be displayed about the adjacent SSCP table that is used to establish a session with the specified CDRSC. You can specify CDRSC as a network-qualified name. If you specify CDRSC, do not specify CDRM, NETID, or SCOPE on the same command.

The setting of the NQNMODE start option might have an effect on how VTAM processes this operand. See the *z/OS Communications Server: SNA Resource Definition Reference* for an explanation of this start option.

MAX
Specifies the maximum number of adjacent SSCP tables or adjacent CDRM lists that VTAM displays for this command.

MAX=*
Specifies that the value of the DSPLYMAX start option is used to limit the display output.

MAX=number_of_resources
Specifies the number of adjacent SSCP tables or adjacent CDRM lists to

display for this command. The valid range is 1–value of DSPLYMAX. The default is the value specified for the DSPLYDEF start option.

Specifying MAX limits the display output. VTAM searches only for the number of instances that you have specified. When that number is found, VTAM does not search any further. This saves processing time for the command and gives you control over the amount of display output generated by the command. If fewer adjacent SSCP tables or adjacent CDRM lists are found than you have specified on MAX, VTAM displays only the adjacent SSCP tables or adjacent CDRM lists that are found.

NETID=netid
Specifies the destination network for the adjacent SSCP table or tables to be displayed. If you specify NETID, do not specify CDRSC on the same command.

SCOPE
Determines the domain of the search for an adjacent SSCP table or tables.

Note: If you specify the SCOPE operand without specifying a value SCOPE=ALL is assumed.

If you specify SCOPE, do not specify CDRSC on the same command.

SCOPE=ALL

- If neither NETID nor CDRM is specified:
  1. VTAM displays all user-defined ADJSSCP tables.
  2. If no user-defined tables exist, VTAM displays the dynamic table if it exists.
- If you specify NETID (and not CDRM):
  1. VTAM displays all ADJSSCP tables for all CDRMs for the specified network.
  2. If there are no tables for individual CDRMS in the specified network, VTAM displays the default table for the specified network.
  3. If there is no default table for the specified network, VTAM displays the dynamic table if it exists.
- If you specify CDRM (and not NETID):
  1. VTAM displays all ADJSSCP tables for the specified CDRM in all networks.
  2. If there are no tables for the specified CDRM, VTAM displays the default table for all networks.
  3. If there is no default table for all networks, VTAM displays the dynamic table if it exists.
- If you specify both NETID and CDRM:
  1. VTAM displays the ADJSSCP for the specified CDRM in the specified network.
  2. If there is no table for the specified CDRM in the specified network, VTAM displays the default table for the specified network.
  3. If there is no default table for the specified network, VTAM displays the ADJSSCP table for the specified CDRM in the default network.
  4. If there is no table for the specified CDRM, VTAM displays the default table for all networks.
  5. If there is no default table for all networks, VTAM displays the dynamic table if it exists.

SCOPE=ONLY

- If you specify neither NETID nor CDRM:
  1. VTAM displays the default table for all networks.
  2. If there is no default table for all networks, VTAM displays the dynamic table if it exists.
- If you specify NETID (and not CDRM):
  1. VTAM displays the default table for the specified network.
  2. If there is no default table for the specified network, VTAM displays the default table for all networks.
  3. If there is no default table for all networks, VTAM displays the dynamic table if it exists.
- If you specify CDRM (and not NETID):
  1. VTAM displays the ADJSSCP table for the specified CDRM in the default network.
  2. If there is no table for the specified CDRM in the default network, VTAM displays the default table for all networks.
  3. If there is no default table for all networks, VTAM displays the dynamic table if it exists.
- If you specify both NETID and CDRM:
  1. VTAM displays the ADJSSCP for the specified CDRM in the specified network.
  2. If there is no table for the specified CDRM in the specified network, VTAM displays the default table for the specified network.
  3. If there is no default table for the specified network, VTAM displays the ADJSSCP table for the specified CDRM in the default network.
  4. If there is no table for the specified CDRM, VTAM displays the default table for all networks.
  5. If there is no default table for all networks, VTAM displays the dynamic table if it exists.

Resulting display

The resulting display differs depending on the operands specified and the value of VTAM start options. (For example, messages IST1704I and IST1705I are only issued if VTAM is enabled for APPN.)

If you specify the ADJLIST operand, the resulting display shows the appropriate adjacent CDRM list.

If you specify the CDRM or CDRSC operands, the resulting display shows the appropriate adjacent SSCP table. VTAM first searches for a user-defined table that satisfies the command. If a user-defined table is not found and the DYNASSCP start option has been set to YES, the dynamic adjacent SSCP table is displayed.

When DISPLAY ADJSSCPS is issued with the CDRSC operand, VTAM builds an adjacent SSCP table as if the resource were the target of a session initiation request. The table displayed is a combination of learned adjacent SSCPs which have been saved for the CDRSC and the appropriate user-defined or dynamic adjacent SSCP table. VTAM displays this table without invoking the session management exit routine for adjacent SSCP selection.

See the *z/OS Communications Server: SNA Network Implementation Guide* for more information on dynamically defined adjacent SSCP tables.

Examples

Examples of the DISPLAY ADJSSCPS command are presented in a scenario because the output of the command depends on the situation. All of these examples assume that the SORDER start option is currently set to SORDER=ADJSSCP.

- Suppose that no adjacent SSCP tables are defined and no LU-LU sessions exist, but a dynamic table was created when an SSCP-SSCP session was established with SSCP2A. To display the dynamically created table, issue:

```
d net,adjsscps (with any other operands except CDRSC or ADJLIST)
IST097I DISPLAY ACCEPTED
IST350I DISPLAY TYPE = ADJACENT SSCP TABLE
IST623I DYNAMIC ADJACENT SSCP TABLE
IST1705I SORDER = ADJSSCP FROM START OPTION
IST624I   SSCP2A
IST1454I 1 RESOURCE(S) DISPLAYED
IST314I END
```

- Later you establish an LU-LU session with APPL2 in SSCP2A. To display the dynamically created, session-specific adjacent SSCP table, issue:

```
d net,adjsscps,cdrsc=appl2
IST097I DISPLAY ACCEPTED
IST350I DISPLAY TYPE = ADJACENT SSCP TABLE
IST611I ADJACENT SSCP TABLE FOR APPL2 IN NETA
IST1705I SORDER = ADJSSCP FROM START OPTION
IST1220I  SSCPNAME NETID    CURRENT STATE ROUTING STATUS
IST624I   SSCP2A   NETA     ACTIV         SUCCESS
IST1454I 1 RESOURCE(S) DISPLAYED
IST314I END
```

- Next you activate the following user-defined ADJSSCP table:

```
************************************************************
*                                                          *
*  ADJSSCP Tables - Assumes SORDER=ADJSSCP Start Option    *
*                                                          *
************************************************************
ADJSSCP  VBUILD  TYPE=ADJSSCP
* Default table for all networks
NETA     NETWORK SORDER=APPNFRST
SSCP1A   ADJCDRM
SSCP2A   ADJCDRM
SSCP7B   ADJCDRM
SSCP9C   ADJCDRM
* CDRM SSCP2A table for all networks
SSCP2A   CDRM
SSCP2A   ADJCDRM
SSCP1A   ADJCDRM
* Default table for network NETA
NETA     NETWORK NETID=NETA,SORDER=APPNFRST
SSCP1A   ADJCDRM
SSCP2A   ADJCDRM
* CDRM SSCP2A table for network NETA
SSCP2A   CDRM
SSCP2A   ADJCDRM
SSCP1A   ADJCDRM
* Default table for network NETB
NETB     NETWORK NETID=NETB
SSCP7B   ADJCDRM
* Default table for network NETC
NETC     NETWORK NETID=NETC
SSCP9C   ADJCDRM
* Define adjacent lists for NETA, NETB and NETC
```

```
LISTA    ADJLIST
SSCP1A   ADJCDRM
SSCP2A   ADJCDRM
LISTB    ADJLIST
SSCP7B   ADJCDRM
LISTC    ADJLIST
SSCP9C   ADJCDRM
```

- To display the new, dynamically created, session-specific adjacent SSCP table for the same resource as above, issue:

```
d net,adjsscps,cdrsc=appl2
IST097I DISPLAY ACCEPTED
IST350I DISPLAY TYPE = ADJACENT SSCP TABLE
IST611I ADJACENT SSCP TABLE FOR APPL2 IN NETA
IST1704I SORDER = APPNFRST FROM ADJACENT SSCP TABLE
IST1220I  SSCPNAME NETID    CURRENT STATE  ROUTING STATUS
IST624I   ISTAPNCP NETA     ACTIV          ***NA**
IST624I   SSCP2A   NETA     ACTIV          SUCCESS
IST624I   SSCP1A   NETA     ACTIV          ***NA**
IST1454I 3 RESOURCE(S) DISPLAYED
IST314I END
```

- To display the user-defined, default ADJSSCP table for all networks, issue:

```
d net,adjsscps
IST097I DISPLAY ACCEPTED
IST350I DISPLAY TYPE = ADJACENT SSCP TABLE
IST623I DEFAULT ADJACENT SSCP TABLE
IST1704I SORDER = APPNFRST FROM ADJACENT SSCP TABLE
IST624I   SSCP1A
IST624I   SSCP2A
IST624I   SSCP7B
IST624I   SSCP9C
IST1454I 3 RESOURCE(S) DISPLAYED
IST314I END
```

- To display the user-defined table for a specific CDRM in the default ADJSSCP table for all networks, issue:

```
d net,adjsscps,cdrm=sscp2a
IST097I DISPLAY ACCEPTED
IST350I DISPLAY TYPE = ADJACENT SSCP TABLE
IST611I ADJACENT SSCP TABLE FOR SSCP2A
IST1704I SORDER = APPNFRST FROM ADJACENT SSCP TABLE
IST624I   SSCP2A
IST624I   SSCP1A
IST1454I 2 RESOURCE(S) DISPLAYED
IST314I END
```

- To display the user-defined table for a specific CDRM in a specific network, issue:

```
d net,adjsscps,cdrm=sscp2a,netid=neta
IST097I DISPLAY ACCEPTED
IST350I DISPLAY TYPE = ADJACENT SSCP TABLE
IST611I ADJACENT SSCP TABLE FOR SSCP2A IN NETA
IST1704I SORDER = APPNFRST FROM ADJACENT SSCP TABLE
IST624I   SSCP2A
IST624I   SSCP1A
IST1454I 2 RESOURCE(S) DISPLAYED
IST314I END
```

- To display all user-defined ADJSSCP tables for a specific CDRM in all networks, issue:

```
d net,adjsscps,cdrm=sscp2a,scope=all
IST097I DISPLAY ACCEPTED
IST350I DISPLAY TYPE = ADJACENT SSCP TABLE
IST611I ADJACENT SSCP TABLE FOR SSCP2A IN NETA
IST1704I SORDER = APPNFRST FROM ADJACENT SSCP TABLE
IST624I   SSCP2A
```

```
IST624I   SSCP1A
IST611I ADJACENT SSCP TABLE FOR SSCP2A
IST1704I SORDER = APPNFRST FROM ADJACENT SSCP TABLE
IST624I   SSCP2A
IST624I   SSCP1A
IST1454I 4 RESOURCE(S) DISPLAYED
IST314I END
```

- Displaying a user-defined adjacent CDRM list (ADJLIST) by name:

```
d net,adjsscps,adjlist=lista
IST097I DISPLAY ACCEPTED
IST350I DISPLAY TYPE = ADJACENT SSCP TABLE
IST1333I ADJLIST = LISTA
IST624I   SSCP1A
IST624I   SSCP2A
IST1454I 2 RESOURCE(S) DISPLAYED
IST314I END
```

- Displaying the session-specific adjacent SSCP table for a resource that specifies an adjacent CDRM list (ADJLIST):

```
d net,adjsscps,cdrsc=appl22
IST097I DISPLAY ACCEPTED
IST350I DISPLAY TYPE = ADJACENT SSCP TABLE
IST611I ADJACENT SSCP TABLE FOR APPL22 IN NETA
IST1704I SORDER = ADJLIST FROM ADJACENT SSCP TABLE
IST1220I  SSCPNAME NETID    CURRENT STATE  ROUTING STATUS
IST624I   SSCP1A   NETA     ACTIV          ***NA**
IST624I   SSCP2A   NETA     ACTIV          ***NA**
IST1454I 2 RESOURCE(S) DISPLAYED
IST314I END
```

- Displaying all user-defined adjacent CDRM lists (ADJLISTs):

```
d net,adjsscps,adjlist=*
IST097I DISPLAY ACCEPTED
IST350I DISPLAY TYPE = ADJACENT SSCP TABLE
IST1333I ADJLIST = LISTC
IST624I   SSCP9C
IST1333I ADJLIST = LISTB
IST624I   SSCP7B
IST1333I ADJLIST = LISTA
IST624I   SSCP1A
IST624I   SSCP2A
IST1454I 4 RESOURCE(S) DISPLAYED
IST314I END
```

- Displaying all user-defined ADJSSCP tables:

```
d net,adjsscps,scope=all
 IST097I DISPLAY ACCEPTED
IST350I DISPLAY TYPE = ADJACENT SSCP TABLE
IST623I DEFAULT ADJACENT SSCP TABLE FOR NETC
IST1705I SORDER = ADJSSCP FROM START OPTION
IST624I   SSCP9C
IST623I DEFAULT ADJACENT SSCP TABLE FOR NETB
IST1705I SORDER = ADJSSCP FROM START OPTION
IST624I   SSCP7B
IST611I ADJACENT SSCP TABLE FOR SSCP2A IN NETA
IST1704I SORDER = APPNFRST FROM ADJACENT SSCP TABLE
IST624I   SSCP2A
IST624I   SSCP1A
IST623I DEFAULT ADJACENT SSCP TABLE FOR NETA
IST1704I SORDER = APPNFRST FROM ADJACENT SSCP TABLE
IST624I   SSCP1A
IST624I   SSCP2A
IST611I ADJACENT SSCP TABLE FOR SSCP2A
IST1704I SORDER = APPNFRST FROM ADJACENT SSCP TABLE
IST624I   SSCP2A
IST624I   SSCP1A
```

```
IST623I DEFAULT ADJACENT SSCP TABLE
IST1704I SORDER = APPNFRST FROM ADJACENT SSCP TABLE
IST624I   SSCP1A
IST624I   SSCP2A
IST624I   SSCP7B
IST624I   SSCP9C
IST1454I 11 RESOURCE(S) DISPLAYED
IST314I END
```

DISPLAY APING command

```
►►─DISPLAY NET,APING──,ID=resource_name──────────────────────────────►

   ┌─,CONSEC=1──────────────────────────┐   ┌─,ECHO=YES──────┐
►──┼──────────────────────────────────────┼──┼────────────────────────►
   └─,CONSEC=number_of_consecutive_packets─┘   └─,ECHO=──┬─NO──┬─┘
                                                         └─YES─┘

   ┌─,ITER=2──────────────────────────────┐
►──┼──────────────────────────────────────────────────────────────────►
   └─,ITER=number_of_send_and_receive_iterations─┘

   ┌─,LOGMODE=#INTER──────────┐                 ┌─,SIZE=100──────────────┐
►──┼──────────────────────────┼──┬──────────────┼────────────────────────►
   └─,LOGMODE=logon_mode_name─┘  └─,PASSWORD─┘  └─,SIZE=size_of_packet─┘

   ┌─,TP=APINGD──────────────────┐
►──┼─────────────────────────────┼──┬──────────────────────────────────►◄
   └─,TP=transaction_program_name─┘  └─,USERID=userid─┘
```

Abbreviations

Operand	Abbreviation
DISPLAY	D

Purpose

The DISPLAY APING command tests whether a route to another LU 6.2 resource or control point is available and displays performance information for the route if the resource supports an APING server.

See the *z/OS Communications Server: SNA Network Implementation Guide* for more information on APING.

Operands

CONSEC=number_of_consecutive_packets
Specifies the number of consecutive packets to be sent per iteration. The value for CONSEC can be any integer in the range 0–32763. The default is 1.

If you specify CONSEC=0, no data is sent or returned; only a version exchange between the transaction programs occurs.

ECHO
Specifies whether data is returned to the sending transaction program, if the server transaction program supports ECHO.

ECHO=NO
Specifies that data is not returned to the sending transaction program.

ECHO=YES
Specifies that data is returned to the sending transaction program.

ID=resource_name
Specifies the name of the resource for which the APING transaction is requested.

ITER=number_of_send_and_receive_iterations
Specifies the number of times that consecutive packets are sent to the receiving transaction program and returned. The value for ITER can be any integer in the range 0–32763. The default is 2.

If you specify ITER=0, no data is sent or returned; only a version exchange between the transaction programs occurs.

LOGMODE=logon_mode_name
Specifies the logon mode name from the default logon mode table (ISTINCLM) to be used when the session is started.

Note: The logon mode names CPSVCMG, CPSVRMGR, and SNASVCMG are not valid for LOGMODE.

PASSWORD
Specifies the password if conversation level security is requested.

This operand is valid only from a MVS console. A command with the PASSWORD operand will be rejected if it is entered from a Program Operator Application (POA) as there is no capability to suppress the password from displaying via the Program Operator Interface.

When this operand is entered from a system console, the operator will be prompted to enter the password with message IST1660A ENTER PASSWORD FOR DISPLAY APING. When the password is entered in reply to IST1660A, it will not be displayed on the system console or in the system log, but will be replaced in the display with the word SUPPRESSED.

The value for PASSWORD can contain 1–8 characters.

SIZE=size_of_packet
Specifies the size (in bytes) of the packets to be sent. The value for SIZE can be any integer in the range 1–32763. The default is 100.

TP=transaction_program_name
Specifies the name of the transaction program to which data is to be sent. The default transaction program name is APINGD.

The value for TP can contain 1–64 characters.

USERID=userid
Specifies the userid if conversation level security is requested.

The value for USERID can contain 1–8 characters.

Resulting display

The resulting VTAM display shows performance information and routing information in two separate message groups.

The performance information includes the following information:

- The specified destination LU and the session identifier (SID)
- An indication of whether the ECHO was performed
- The elapsed time for conversation allocation and version exchange
- The data rate calculations for each iteration and the data rate calculations for all iterations
- The elapsed time for each iteration and the total elapsed time for all iterations
- The minimum, maximum, and average elapsed time for each iteration

Note: No decimal values are displayed for data rate calculations in messages. If the data rate calculation includes a decimal, the value is truncated to the whole number. If the data rate calculation is less than one, zero is displayed.

If a session is allocated for the DISPLAY APING command, VTAM also displays the following routing information:

- The destination LU and the session identifier (SID)
- The Class of Service table entry and logon mode entry used

  Note: If the session cannot be established with the requested LOGMODE, the session is established with a default logon mode of *BLANK*.
- If the destination LU is found in or through a subarea network, VTAM displays:
  - The origination subarea number and the destination subarea number of the first node in the route
  - The virtual route and explicit route numbers
- If the destination LU is found in or through an APPN network, VTAM displays:
  - The APPN Class of Service toward the SLU
  - The transmission group number and type for APPN
  - The destination CP name for the TG

The routing information can be correlated to the performance information using the session identifier (SID).

Note: The name of the destination LU in the routing information might not match the name of the destination LU in the performance information if any name translation has occurred on the route between the LUs.

Examples

Displaying APING information when a session to the destination already exists and is using the requested logon mode:

```
d net,aping,id=sscp2a
IST1457I VTAM APING VERSION 2R33 (PARTNER TP VERSION 2R33)
IST1490I DLU=NETA.SSCP2A SID=EAABEEC3710FD9E7
IST1462I ECHO IS ON
IST1463I ALLOCATION DURATION 17717 MILLISECONDS
IST1464I PROGRAM STARTUP AND VERSION EXCHANGE: 81 MILLISECONDS
IST1465I         DURATION      DATA SENT   DATA RATE   DATA RATE
IST1466I      (MILLISECONDS)    (BYTES)    (KBYTE/S)    (MBIT/S)
IST1467I               74           200           2           0
IST1467I            19543           200           0           0
IST1468I TOTALS:    19617           400           0           0
IST1469I DURATION STATISTICS:
IST1470I MINIMUM = 74 AVERAGE = 9808 MAXIMUM = 19543
IST314I END
```

Displaying APING information when the destination is in the same APPN network:

```
d net,aping,id=sscp1a
IST097I DISPLAY ACCEPTED
IST1489I APING SESSION INFORMATION
IST1490I DLU=NETA.SSCP1A SID=F6ABEEC3742C592E
IST933I LOGMODE=#INTER  , COS=*BLANK*
IST875I APPNCOS TOWARDS SLU = #INTER
IST1460I TGN  CPNAME            TG TYPE      HPR
IST1461I  21  NETA.SSCP1A       APPN         RTP
IST314I END

IST1457I VTAM APING VERSION 2R33 (PARTNER TP VERSION 2R33)
```

```
IST1490I DLU=NETA.SSCP1A SID=F6ABEEC3742C592E
IST1462I ECHO IS ON
IST1463I ALLOCATION DURATION 834 MILLISECONDS
IST1464I PROGRAM STARTUP AND VERSION EXCHANGE: 174 MILLISECONDS
IST1465I         DURATION      DATA SENT   DATA RATE   DATA RATE
IST1466I      (MILLISECONDS)    (BYTES)    (KBYTE/S)    (MBIT/S)
IST1467I              119           200           1           0
IST1467I             6088           200           0           0
IST1468I TOTALS:     6207           400           0           0
IST1469I DURATION STATISTICS:
IST1470I MINIMUM = 119 AVERAGE = 3103 MAXIMUM = 6088
IST314I END
```

Displaying APING information when the destination is in an adjoining subarea network:

```
d net,aping,id=sscp1a
IST097I DISPLAY ACCEPTED
IST1489I APING SESSION INFORMATION
IST1490I DLU=NETA.SSCP1A SID=EAABEE18C8567C6A
IST933I LOGMODE=#INTER  , COS=*BLANK*
IST875I APPNCOS TOWARDS SLU = #INTER
IST1460I TGN  CPNAME             TG TYPE      HPR
IST1461I  21  NETA.SSCP2A        APPN         ANR
IST1461I 254  SSCP1A             INTERCHANGE  *NA*
IST314I END

IST1457I VTAM APING VERSION 2R33 (PARTNER TP VERSION 2R33)
IST1490I DLU=NETA.SSCP1A SID=EAABEE18C8567C6A
IST1462I ECHO IS ON
IST1463I ALLOCATION DURATION 8208 MILLISECONDS
IST1464I PROGRAM STARTUP AND VERSION EXCHANGE: 35 MILLISECONDS
IST1465I         DURATION      DATA SENT   DATA RATE   DATA RATE
IST1466I      (MILLISECONDS)    (BYTES)    (KBYTE/S)    (MBIT/S)
IST1467I               26           200           7           0
IST1467I               22           200           9           0
IST1468I TOTALS:       48           400           8           0
IST1469I DURATION STATISTICS:
IST1470I MINIMUM = 22 AVERAGE = 24 MAXIMUM = 26
IST314I END
```

Displaying APING information when the destination is reached through a VRTG:

```
d net,aping,id=sscp2a
IST097I DISPLAY ACCEPTED
IST1489I APING SESSION INFORMATION
IST1490I DLU=NETA.SSCP2A SID=EAABEEC379DA83D2
IST933I LOGMODE=#INTER  , COS=*BLANK*
IST875I APPNCOS TOWARDS SLU = #INTER
IST1460I TGN  CPNAME             TG TYPE      HPR
IST1461I 255  NETA.SSCP2A        VRTG         RTP
IST314I END

IST1457I VTAM APING VERSION 2R33 (PARTNER TP VERSION 2R33)
IST1490I DLU=NETA.SSCP2A SID=EAABEEC379DA83D2
IST1462I ECHO IS ON
IST1463I ALLOCATION DURATION 414 MILLISECONDS
IST1464I PROGRAM STARTUP AND VERSION EXCHANGE: 210 MILLISECONDS
IST1465I         DURATION      DATA SENT   DATA RATE   DATA RATE
IST1466I      (MILLISECONDS)    (BYTES)    (KBYTE/S)    (MBIT/S)
IST1467I              622           200           0           0
IST1467I             4246           200           0           0
IST1468I TOTALS:     4868           400           0           0
IST1469I DURATION STATISTICS:
IST1470I MINIMUM = 622 AVERAGE = 2434 MAXIMUM = 4246
IST314I END
```

DISPLAY APING

Displaying APING information when the destination is in a connecting subarea network:

```
d net,aping,id=sscp2a
IST097I DISPLAY ACCEPTED
IST1489I APING SESSION INFORMATION
IST1490I DLU=NETA.SSCP2A SID=EAABEEC3710FD9E7
IST933I LOGMODE=#INTER  , COS=*BLANK*
IST1458I ORIGIN   ADJSUB    VR       TP       ER      REVERSE ER
IST1459I     1        2      2        0        3           4
IST314I END

IST1457I VTAM APING VERSION 2R33 (PARTNER TP VERSION 2R33)
IST1490I DLU=NETA.SSCP2A SID=EAABEEC3710FD9E7
IST1462I ECHO IS ON
IST1463I ALLOCATION DURATION 17717 MILLISECONDS
IST1464I PROGRAM STARTUP AND VERSION EXCHANGE: 81 MILLISECONDS
IST1465I         DURATION      DATA SENT   DATA RATE   DATA RATE
IST1466I      (MILLISECONDS)    (BYTES)    (KBYTE/S)    (MBIT/S)
IST1467I               74           200           2           0
IST1467I            19543           200           0           0
IST1468I TOTALS:    19617           400           0           0
IST1469I DURATION STATISTICS:
IST1470I MINIMUM = 74 AVERAGE = 9808 MAXIMUM = 19543
IST314I END
```

Displaying APING information when the destination is in a non-native network:

```
d net,aping,id=netb.sscp7b
IST097I DISPLAY ACCEPTED
IST1489I APING SESSION INFORMATION
IST1490I DLU=NETB.SSCP7B SID=F6ABEEC374364CA8
IST933I LOGMODE=#INTER  , COS=*BLANK*
IST875I APPNCOS TOWARDS SLU = #INTER
IST1460I TGN  CPNAME            TG TYPE      HPR
IST1461I  21  NETA.SSCP1A        APPN         ANR
IST1461I  21  NETB.SSCP7B        ISL          ANR
IST314I END

IST1457I VTAM APING VERSION 2R33 (PARTNER TP VERSION 2R33)
IST1490I DLU=NETB.SSCP7B SID=F6ABEEC374364CA8
IST1462I ECHO IS ON
IST1463I ALLOCATION DURATION 360 MILLISECONDS
IST1464I PROGRAM STARTUP AND VERSION EXCHANGE: 262 MILLISECONDS
IST1465I         DURATION      DATA SENT   DATA RATE   DATA RATE
IST1466I      (MILLISECONDS)    (BYTES)    (KBYTE/S)    (MBIT/S)
IST1467I              334           200           0           0
IST1467I              108           200           1           0
IST1468I TOTALS:      442           400           0           0
IST1469I DURATION STATISTICS:
IST1470I MINIMUM = 108 AVERAGE = 221 MAXIMUM = 334
IST314I END
```

DISPLAY APINGDTP command

```
►►──DISPLAY NET,APINGDTP──────────────────────────────────────────────►◄
```

Purpose

The DISPLAY APINGDTP command displays the number of APINGD transaction programs permitted to run concurrently for responding to APING requests from other nodes.

Resulting display

The resulting VTAM display shows the number of APINGD transaction programs permitted to run concurrently for responding to APING requests from other nodes.

Examples

Displaying the number of transaction programs permitted to run concurrently:

```
d net,apingdtp
IST097I DISPLAY ACCEPTED
IST1474I APINGD TP CONCURRENT INSTANCE LIMIT = 10
```

DISPLAY APPLS command

```
►►─DISPLAY NET,APPLS──┬──────────────────────────────────────────────────────►
                      │                          (1)
                      └─,ID=──┬─name──────────────┬──┘
                              │      ┌──,──┐       │
                              └─(────▼─name─────)─┘

►─┬─,MAX=DSPLYDEF_start_option_value─┬─┬─,SCOPE=ALL──────────────┬──────────►◄
  │                                  │ │                         │
  └─,MAX=──┬─*──────────────────────┬─┘ └─,SCOPE=──┬─ALL──────────┬─┘
           └─number_of_resources────┘               │              │
                                                    ├─ACT──────────┤
                                                    ├─ACTONLY──────┤
                                                    ├─ACTSESS──────┤
                                                    ├─ALL──────────┤
                                                    ├─CONCT────────┤
                                                    ├─INACT────────┤
                                                    ├─INACTONLY────┤
                                                    ├─PENDING──────┤
                                                    └─RESET────────┘
```

Notes:

1 Depending on the value of the DSPLYWLD start option, wildcard values can be used for this operand.

Abbreviations

Operand	Abbreviation
DISPLAY	D
SCOPE=ACT	ACT or A
SCOPE=ACTONLY	ACTONLY
SCOPE=ACTSESS	ACTSESS
SCOPE=ALL	EVERY or E
SCOPE=CONCT	CONCT
SCOPE=INACT	INACT or I
SCOPE=INACTONLY	INACTONL
SCOPE=PENDING	PEND
SCOPE=RESET	RESET

When using an abbreviation in place of an operand, code the abbreviation exactly as shown in the table. For example, when coding the abbreviation for SCOPE=ALL, code only EVERY or E. Do not code SCOPE=E.

Purpose

The DISPLAY APPLS (applications) command displays the status of active application program major nodes in the domain along with their subordinate application program minor nodes.

Note: To display application program minor nodes independently of the major nodes that contain them, use the DISPLAY RSCLIST command with IDTYPE=APPLS.

Operands

ID=name
Specifies the name of one or more active application program major nodes whose subordinate resources are to be displayed.

Depending on the value of the DSPLYWLD start option, wildcard values can be used for this operand. For more information about using wildcards, see “Using wildcard names” on page 11.

Attention: Specifying a wildcard name might degrade performance because VTAM checks every application major node in the network.

MAX
Specifies the maximum number of application program minor nodes that VTAM displays for this command.

MAX=*
Specifies that the value of the DSPLYMAX start option is used to limit the display output.

MAX=number_of_resources
Specifies the number of application program minor nodes to display for this command. The valid range is 1–value of DSPLYMAX. The default is the value specified for the DSPLYDEF start option.

Specifying MAX limits the display output. VTAM searches only for the number of instances that you have specified. When that number is found, VTAM does not search any further. This saves processing time for the command and gives you control over the amount of display output generated by the command. If fewer application program minor nodes are found than you have specified on MAX, VTAM displays only the application program minor nodes that are found.

SCOPE
Specifies the desired scope of the display.

Note: If you specify the SCOPE operand without specifying a value SCOPE=ALL is assumed.

SCOPE=ACT
Specifies that information is to be displayed about all active, pending, and connectable application program minor nodes within the specified major nodes (or within all major nodes if the ID operand is omitted). If this display is undesirably large, you can use SCOPE=ACTONLY or SCOPE=CONCT to further limit the display.

SCOPE=ACTONLY
Specifies that information is to be displayed about all application program minor nodes in an active state within the specified major nodes (or within all major nodes if the ID operand is omitted). The display does **not** include application programs in pending or connectable states. If no applications are found in an active state, you can use SCOPE=ACT to broaden the scope of the display to active, connectable, and pending applications.

SCOPE=ACTSESS
Specifies that information is to be displayed about all application program

minor nodes that are active with sessions within the specified major nodes (or within all major nodes if the ID operand is omitted).

SCOPE=ALL
Specifies that information is to be displayed about all application program minor nodes (regardless of their status) within the specified major nodes (or within all major nodes if the ID operand is omitted).

SCOPE=CONCT
Specifies that information is to be displayed about all application program minor nodes in a CONCT (connectable) state within the specified major nodes (or within all major nodes if the ID operand is omitted). If no applications are found in a connectable state, you can use SCOPE=ACT to broaden the scope of the display to active, connectable, and pending applications.

SCOPE=INACT
Specifies that information is to be displayed about all inactive application program minor nodes within the specified major nodes (or within all major nodes if the ID operand is omitted). If this display is undesirably large, you can use SCOPE=INACTONLY or SCOPE=RESET to further limit the display.

SCOPE=INACTONLY
Specifies that information is to be displayed about all inactive application program minor nodes within the specified major nodes (or within all major nodes if the ID operand is omitted). Resources in a RESET state are not included in the SCOPE=INACTONLY display.

SCOPE=PENDING
Specifies that information is to be displayed about all pending application program minor nodes within the specified major nodes (or within all major nodes if the ID operand is omitted). A pending state is:

- A transient state to or from the fully active state
- A state of “recovery pending” or “recovery in progress” for application programs that have been retained due to the failure or takeover of an application program enabled for persistence

SCOPE=RESET
Specifies that information is to be displayed about all application program minor nodes in a RESET state within the specified major nodes (or within all major nodes if the ID operand is omitted).

Resulting display

The resulting VTAM display shows:

- The name and status of the specified active application program major nodes (or all active application program major nodes if the ID operand is omitted). Inactive application program major nodes are not known to VTAM and are therefore not displayed.
- For each active application program major node, the name and status of each subordinate application program minor node (limited to active, connectable, inactive, or pending minor nodes if specified on the SCOPE operand).

  If a model application program has been defined in the major node being displayed, the model application program will be included in the display. In addition, any dynamic application programs that have been built from the model application program definition will also be included in the display.

Note: Dynamic application programs that have been deactivated are not displayed. This is because dynamic application programs cannot exist in an inactive state. When a dynamic application program is deactivated and CLOSE macro processing is complete for the dynamic application program, the definition of the dynamic application program is deleted. The dynamic application program is no longer known by VTAM and will not appear in the output of any DISPLAY commands.

If a channel-attached host is used as an intermediate routing node for either a primary or backup extended recovery facility (XRF) session, the session through the channel-attached host might fail without notifying the XRF host. In that case, a DISPLAY APPLS command issued from either the primary or alternate host shows the failed session across the channel attachment as active.

Examples

Displaying all application program major nodes and their minor nodes:

```
d net,appls
IST097I DISPLAY ACCEPTED
IST350I DISPLAY TYPE = APPL MAJ NODES/NAMES
IST089I VTAMSEG  TYPE = APPL SEGMENT     , ACTIV
IST360I APPLICATIONS:
IST080I ISTATA00 CONCT      ISTNOP   ACTIV      ISTPDCLU ACT/S
IST080I A01N     ACT/S
IST089I A01APPLS TYPE = APPL SEGMENT     , ACTIV
IST360I APPLICATIONS:
IST080I A01NV    ACTIV      A01NVPPT ACTIV      A01NV000 CONCT
IST080I A01NV001 ACTIV      A01NV002 ACTIV      A01NV003 ACTIV
IST080I A01NV004 ACTIV      A01NV005 ACTIV      A01NV006 ACTIV
IST080I A01NV007 CONCT      A01NV008 CONCT      A01NV009 CONCT
IST080I A01TFOPT CONCT      A01TFO0  CONCT      A01TFO1  CONCT
IST080I A01TFO2  CONCT      A01TFO3  CONCT      A01TFO4  CONCT
IST080I A01TF00  CONCT      A01TF01  CONCT      A01TF02  CONCT
IST080I A01TF03  CONCT      A01TF04  CONCT      A01TF05  CONCT
IST080I A01TF06  CONCT      A01TF07  CONCT      A01TF08  CONCT
IST080I A01TF09  CONCT      AAUTSKLP CONCT      AAUTCNMI ACTIV
IST080I DSICRTR  ACTIV      DSIAMLUT ACT/S      A01NVLUC ACT/S
IST080I A01NVSPT ACTIV      BNJHWMON ACTIV      ALIASAPL CONCT
IST080I DSIGDS   ACTIV      APPLR02  CONCT      APPLA01  CONCT
IST080I APPL01   CONCT      APPL0102 CONCT      A01MVSNO CONCT
IST080I A01MVSOP CONCT      A01MVSRE CONCT      WORM     CONCT
IST080I DIAL01   CONCT      CAPPL01O CONCT      CAPPL01C CONCT
IST080I CAPPL01N CONCT      ECHO01   CONCT      ECHOX01  CONCT
IST080I ECHOA01  CONCT      APPCA01  CONCT      A01AP08  CONCT
IST080I A01SPAP8 CONCT      A01SPAP9 CONCT      NPMA01M  CONCT
IST080I NPMA01MA CONCT      TPNS02   CONCT      TPNSA01  CONCT
IST080I IMS02    CONCT      MHCICS02 CONCT      CICS02A  CONCT
IST080I TCAM02   CONCT      TSO02    ACTIV      TSO0201  ACT/S
IST080I TSO0202  CONCT      TSO0203  CONCT      TSO0204  CONCT
IST080I TSO0205  CONCT      TSO0206  CONCT      TSO0207  CONCT
IST080I TSO0208  CONCT      TSO0209  CONCT      TSO0210  CONCT
IST080I VMA01    CONCT      VMA011   CONCT      VMA012   CONCT
IST080I VMA013   CONCT      VMA014   CONCT      VMA015   CONCT
IST080I VMA016   CONCT      VMA017   CONCT      VMA018   CONCT
IST080I VMA019   CONCT
IST089I A01ECHOC TYPE = APPL SEGMENT     , ACTIV
IST360I APPLICATIONS:
IST080I ECHO01A  ACT/S      ECHO01B  ACTIV      ECHO01C  ACT/S
IST080I ECHO01D  CONCT      ECHO01E  CONCT
IST1454I 93 RESOURCE(S) DISPLAYED
IST314I END
```

DISPLAY APPLS

Displaying a specific application program major node and its minor nodes, including model application programs and dynamic application programs built from those models:

```
d net,appls,id=a01appls
IST097I DISPLAY ACCEPTED
IST350I DISPLAY TYPE = APPL MAJ NODES/NAMES
IST089I A01APPLS TYPE = APPL SEGMENT     , ACTIV
IST360I APPLICATIONS:
IST080I APPL1    CONCT      APPLA*   CONCT      APPL2    CONCT
IST080I APPLQ?   CONCT      APPLQ1   ACTIV      APPL3    CONCT
IST080I APPL01   CONCT      APPL0102 CONCT      A01MVSNO CONCT
IST1454I 9 RESOURCE(S) DISPLAYED FOR ID=A01APPLS
IST314I END
```

Displaying application program major nodes and their minor nodes, limiting output to 5 resources:

```
d net,appls,max=5
IST097I DISPLAY ACCEPTED
IST350I DISPLAY TYPE = APPL MAJ NODES/NAMES
IST089I VTAMSEG  TYPE = APPL SEGMENT     , ACTIV
IST360I APPLICATIONS:
IST080I ISTATA00 CONCT      ISTNOP   ACTIV      ISTPDCLU ACTIV
IST080I SSCP1A   ACTIV
IST089I APPL1A   TYPE = APPL SEGMENT     , ACTIV
IST360I APPLICATIONS:
IST080I ADRAPL01 CONCT
IST1315I DISPLAY TRUNCATED AT MAX = 5
IST1454I 5 RESOURCE(S) DISPLAYED
IST314I END
```

DISPLAY APPNTOSA command

```
►►──DISPLAY NET,APPNTOSA──────────────────────────────────────────────►◄
```

Purpose

The DISPLAY APPNTOSA command displays the APPN-to-subarea Class of Service mapping table.

Resulting display

The resulting VTAM display shows the APPN-to-subarea Class of Service mapping table.

Examples

Displaying the APPN-to-subarea Class of Service mapping table:

```
d net,appntosa
IST097I DISPLAY ACCEPTED
IST350I DISPLAY TYPE = APPNTOSA
IST1321I TABLE FOR APPNTOSA
IST1431I APPNCOS       SUBAREA COS
IST1323I #CONNECT       COSAPPL1
IST1323I #BATCH         COSAPPL2
IST1323I #BATCHSC       COSAPPL3
IST1323I #INTER         COSAPPL4
IST1323I #CONNECT       COSAPPL5       DEFAULT
IST1323I #INTERSC       ISTCOSDF
IST314I END
```

DISPLAY BFRUSE command

```
                          ┌─,BUFFER=*──────────────────────────┐
►►─DISPLAY NET,BFRUSE─────┤                                    ├──────────────────►◄
                          └─,BUFFER=─┬─*──────────────────────┬┘
                                     ├─SHORT──────────────────┤
                                     ├─SUMMARY────────────────┤
                                     ├─buffid─────────────────┤
                                     └─(─buffid─┬──────────┬─)┘
                                                └─,SUMMARY─┘
```

Abbreviations

Operand	Abbreviation
DISPLAY	D
BUFFER=*	BUF=*
BUFFER=buffid	BUF=buffid
BUFFER=SHORT	BUF=SH
BUFFER=SUMMARY	BUF=SUMM

When using an abbreviation in place of an operand, code the abbreviation exactly as shown in the table. For example, when coding the abbreviation for BUFFER=SHORT, code only BUF=SH. Do not code BUFFER=SH.

Purpose

The DISPLAY BFRUSE (buffer use) command displays information about VTAM buffer use. It also displays storage usage summary information for VTAM modules.

Operands

BUFFER

Specifies the buffers to display.

Table 1 on page 42 shows, for each buffer pool, the buffer pool ID, its name, and its abbreviation.

BUFFER=*

Displays all buffer pools and information along with:

- Common service area (CSA) usage for buffers
- Intermediate routing node buffer usage limit (IRNLIMIT)
- VTAM private storage usage for buffers
- Common service area (CSA) usage for modules
- VTAM private storage usage for modules

BUFFER=SHORT

Displays a shortened format of buffer-related information. Five digits are shown instead of 10. If the number is too large for display in 5 digits, then 5 asterisks (*****) are displayed. To view the data for that buffer, you can use the BUFFER=buffid operand.

The SHORT operand displays buffer pool information, along with:

- CSA usage for buffers
- IRNLIMIT buffer usage
- VTAM private storage usage for buffers

- CSA usage for modules
- VTAM private storage usage for modules

BUFFER=SUMMARY
Displays information about:
- CSA usage for buffers
- IRNLIMIT buffer usage
- VTAM private storage usage for buffers
- CSA usage for modules
- VTAM private storage usage for modules

The information supplied by SUMMARY is independent of the information supplied by *buffid*. SUMMARY can be specified with or without *buffid*.

BUFFER=buffid
Displays buffer pool count information for one or more standard VTAM buffer pools. Buffer pool count information will be displayed for the specified pools. A buffer name can be the full name, the buffer ID, or an abbreviation.

Resulting display

For each buffer pool requested, the resulting VTAM display shows:

- The buffer pool identification (name of the buffer pool).
- Queued buffer requests (indicated by a **Q** after the buffer pool identification). The message display shows the expansion limit for the **Q** buffer and the number of buffers needed to satisfy the queued requests.
- Whether an expansion attempt has failed (indicated by an **F** after the buffer pool identification). The message display shows the expansion limit for the **F** buffer and the number of buffers needed to satisfy the queued requests.
- The size, in bytes, of each buffer. (Note that for certain buffer pools, such as IOBUF, the size displayed might not match the size specified in the buffer pool start options because VTAM increases the size of some buffers for buffer headers that must be added.
- The number of buffers currently assigned to the pool.
- The number of buffers currently available for use.
- The maximum number of buffers ever assigned to the pool (since the last SMS trace record was written, if an SMS trace is active).
- The maximum number of buffers ever used within the pool (since the last SMS trace record was written, if an SMS trace is active).
- The number of times that the buffer pool has been expanded (since the last SMS trace record was written, if an SMS trace is active).
- The number of available buffers at or below which expansion will occur.
- The number of available buffers at or above which contraction will be attempted.
- The number of buffers to be added during each expansion. This field contains “NA” (not applicable) if the dynamic buffer expansion function is not being used.

VTAM displays additional storage usage information when the BUFFER operand is not coded, when BUFFER=*, when BUFFER=SHORT, or when BUFFER=SUMMARY is specified:

- For VTAM’s common service area (CSA), including 24-bit and 31-bit addressable storage:
  - The usage limit for buffers
  - The current usage for buffers and modules

Note: Current usage for buffers is shown in message IST449I. Current usage for modules is shown in message IST1565I.

– The maximum CSA usage for buffers since the last DISPLAY BFRUSE command
– The maximum CSA usage for buffers since VTAM was started
– The system CSA limit (90% of the total 24-bit and 31-bit CSA defined to the system)

- For 24-bit addressable CSA storage:
  – The usage limit for buffers
  – The current usage for buffers and modules

  Note: Current usage for buffers is shown in message IST449I. Current usage for modules is shown in message IST1565I.

  – The maximum CSA usage for buffers since the last DISPLAY BFRUSE command
  – The maximum CSA usage for buffers since VTAM was started

  Note: If VTAM requests 31-bit addressable storage and the operating system cannot honor the CSA storage request, the operating system provides VTAM with 24-bit addressable storage. The resulting display, however, shows the explicit storage request.

- VTAM's intermediate routing node buffer usage limit (IRNLIMIT), current buffer usage, and maximum buffer usage
- Current VTAM private storage usage for buffers and modules and the maximum amount of VTAM private storage for buffers ever in use since VTAM was started.

  Note: The private storage amount includes storage allocated by VTAM's storage management services, plus the storage for VTAM tables and installation-wide exit routines.

  Current usage for buffers is shown in message IST981I. Current usage for modules is shown in message IST1565I.

For more information about using VTAM buffer use data, see the *z/OS Communications Server: SNA Diagnosis Vol 1, Techniques and Procedures*.

Table 1 shows the IDs, names and abbreviated names of the buffer pools. For descriptions of VTAM buffer pools, see the *z/OS Communications Server: SNA Network Implementation Guide*.

Table 1. Buffer pools

ID	Name	Abbrev
IO00	IOBUF	IO
BS00	BSBUF	BS
LP00	LPBUF	LP
XD00	XDBUF	XD
LF00	LFBUF	LF
CRPL	CRPLBUF	CR
SF00	SFBUF	SF
SP00	SPBUF	SP™
AP00	APBUF	AP
TI00	TIBUF	TI

Table 1. Buffer pools (continued)

ID	Name	Abbrev
CRA4	CRA4BUF	CRA4
CRA8	CRA8BUF	CRA8

Examples

Displaying VTAM buffer usage for a specific buffer:

```
d net,bfruse,buffer=io00
IST097I DISPLAY ACCEPTED
IST350I DISPLAY TYPE = BUFFER POOL DATA
IST920I IO00     BUFF SIZE  334         EXP INCREMENT   55
IST921I          TIMES EXP  0           EXP/CONT THRESH 36    / *NA*
IST922I          CURR TOTAL 110         CURR AVAILABLE  110
IST923I          MAX TOTAL  110         MAX USED        1
IST989I          EXP LIMIT  2147483647  BUFFS REQUESTED 0
IST314I END
```

Displaying a storage usage summary:

```
d net,bfruse,buffer=summary
IST097I DISPLAY ACCEPTED
IST350I DISPLAY TYPE = BUFFER POOL DATA
IST449I CSALIMIT = NOLIMIT, CURRENT = 1388K, MAXIMUM = 1388K
IST790I MAXIMUM CSA USED = 1388K
IST1667I SYSTEM CSA LIMIT=1887436K
IST1831I 56% OF SYSTEM CSA STORAGE REMAINING = 1056964K
IST449I CSA24 LIMIT = NOLIMIT, CURRENT = 76K, MAXIMUM = 76K
IST790I MAXIMUM CSA24 USED = 76K
IST595I IRNLIMIT = NOLIMIT, CURRENT = 0K, MAXIMUM = 0K
IST981I VTAM PRIVATE: CURRENT = 4550K, MAXIMUM USED = 4603K
IST924I -------------------------------------------------------------
IST1565I CSA MODULES = 1384K
IST1565I CSA24 MODULES = 40K
IST1565I PRIVATE MODULES = 5205K
IST314I END
```

Displaying VTAM buffer usage for a buffer pool and a storage usage summary:

```
d net,bfruse,buffer=(io00,summary)
IST097I DISPLAY ACCEPTED
IST350I DISPLAY TYPE = BUFFER POOL DATA
IST920I IO00     BUFF SIZE  334         EXP INCREMENT   55
IST921I          TIMES EXP  0           EXP/CONT THRESH 36    / *NA*
IST922I          CURR TOTAL 110         CURR AVAILABLE  110
IST923I          MAX TOTAL  110         MAX USED        1
IST989I          EXP LIMIT  2147483647  BUFFS REQUESTED 0
IST924I -------------------------------------------------------------
IST449I CSALIMIT = NOLIMIT, CURRENT = 1388K, MAXIMUM = 1388K
IST790I MAXIMUM CSA USED = 1388K
IST1667I SYSTEM CSA LIMIT=1887436K
IST449I CSA24 LIMIT = NOLIMIT, CURRENT = 76K, MAXIMUM = 76K
IST790I MAXIMUM CSA24 USED = 76K
IST595I IRNLIMIT = NOLIMIT, CURRENT = 0K, MAXIMUM = 0K
IST981I VTAM PRIVATE: CURRENT = 4550K, MAXIMUM USED = 4603K
IST924I -------------------------------------------------------------
IST1565I CSA MODULES = 1384K
IST1565I CSA24 MODULES = 40K
IST1565I PRIVATE MODULES = 5205K
IST314I END
```

Displaying a VTAM buffer usage summary in table format and a storage usage summary:

DISPLAY BFRUSE

```
d net,bfruse,buffer=short
IST097I DISPLAY ACCEPTED
IST350I DISPLAY TYPE = BUFFER POOL DATA 648
IST632I BUFF   BUFF  CURR  CURR  MAX    MAX  TIMES   EXP/CONT    EXP
IST633I  ID    SIZE TOTAL AVAIL TOTAL  USED   EXP   THRESHOLD   INCR
IST356I IO00    338   110   109   110    18      0    36/-----    55
IST356I BS00    298    24    24    24     0      0    12/-----    12
IST356I LP00   2032    64    61    64     5      0    22/-----     4
IST356I XD00    697     5     5     5     0      0     4/-----     5
IST356I LF00    120   120   116   120     4      0    33/-----    30
IST356I CRPL    144   200   198   200     2      0    10/-----    25
IST356I SF00    112    64    62    64     2      0    10/-----    32
IST356I SP00    176    42    42    42     0      0     1/-----    21
IST356I AP00     56    56    56    56     0      0     3/-----    56
IST356I TI00    632    60    60    60     0      0    29/-----    60
IST356I CRA4   4080    12    10    12     2      0     2/-----     6
IST356I CRA8   8176    12    12    12     0      0     2/-----     6
IST924I -------------------------------------------------------------
IST449I CSALIMIT = NOLIMIT, CURRENT = 1698K, MAXIMUM = 1698K
IST790I MAXIMUM CSA USED = 1698K
IST1667I SYSTEM CSA LIMIT=1887436K
IST449I CSA24 LIMIT = NOLIMIT, CURRENT = 56K, MAXIMUM = 56K
IST790I MAXIMUM CSA24 USED = 57K
IST595I IRNLIMIT = NOLIMIT, CURRENT = 0K, MAXIMUM = 0K
IST981I VTAM PRIVATE: CURRENT = 691K, MAXIMUM USED = 698K
IST924I -------------------------------------------------------------
IST1565I CSA MODULES = 1456K
IST1565I CSA24 MODULES = 32K
IST1565I PRIVATE MODULES = 5823K
IST314I END
```

Displaying VTAM buffer usage for all buffers and a storage usage summary:

```
d net,bfruse
IST097I DISPLAY ACCEPTED
IST350I DISPLAY TYPE = BUFFER POOL DATA
IST920I IO00     BUFF SIZE  334         EXP INCREMENT   55
IST921I          TIMES EXP  0           EXP/CONT THRESH 36    / *NA*
IST922I          CURR TOTAL 110         CURR AVAILABLE  110
IST923I          MAX TOTAL  110         MAX USED        1
IST989I          EXP LIMIT  2147483647  BUFFS REQUESTED 0
IST924I -------------------------------------------------------------
IST920I BS00     BUFF SIZE  216         EXP INCREMENT   17
IST921I          TIMES EXP  0           EXP/CONT THRESH 17    / *NA*
IST922I          CURR TOTAL 34          CURR AVAILABLE  34
IST923I          MAX TOTAL  34          MAX USED        0
IST924I -------------------------------------------------------------
IST920I LP00     BUFF SIZE  2032        EXP INCREMENT   4
IST921I          TIMES EXP  0           EXP/CONT THRESH 22    / *NA*
IST922I          CURR TOTAL 64          CURR AVAILABLE  60
IST923I          MAX TOTAL  64          MAX USED        4
IST924I -------------------------------------------------------------
IST920I XD00     BUFF SIZE  681         EXP INCREMENT   5
IST921I          TIMES EXP  0           EXP/CONT THRESH 5     / *NA*
IST922I          CURR TOTAL 10          CURR AVAILABLE  10
IST923I          MAX TOTAL  10          MAX USED        0
IST924I -------------------------------------------------------------
IST920I LF00     BUFF SIZE  120         EXP INCREMENT   30
IST921I          TIMES EXP  0           EXP/CONT THRESH 33    / *NA*
IST922I          CURR TOTAL 120         CURR AVAILABLE  118
IST923I          MAX TOTAL  120         MAX USED        2
IST924I -------------------------------------------------------------
IST920I CRPL     BUFF SIZE  160         EXP INCREMENT   23
IST921I          TIMES EXP  0           EXP/CONT THRESH 10    / *NA*
IST922I          CURR TOTAL 207         CURR AVAILABLE  207
IST923I          MAX TOTAL  207         MAX USED        1
IST924I -------------------------------------------------------------
```

```
IST920I SF00     BUFF SIZE  112         EXP INCREMENT   32
IST921I          TIMES EXP  0           EXP/CONT THRESH 10    / *NA*
IST922I          CURR TOTAL 64          CURR AVAILABLE  62
IST923I          MAX TOTAL  64          MAX USED        2
IST924I ------------------------------------------------------------
IST920I SP00     BUFF SIZE  144         EXP INCREMENT   25
IST921I          TIMES EXP  0           EXP/CONT THRESH 1     / *NA*
IST922I          CURR TOTAL 50          CURR AVAILABLE  50
IST923I          MAX TOTAL  50          MAX USED        0
IST924I ------------------------------------------------------------
IST920I AP00     BUFF SIZE  56          EXP INCREMENT   56
IST921I          TIMES EXP  0           EXP/CONT THRESH 3     / *NA*
IST922I          CURR TOTAL 56          CURR AVAILABLE  56
IST923I          MAX TOTAL  56          MAX USED        0
IST924I ------------------------------------------------------------
IST920I TI00     BUFF SIZE  632         EXP INCREMENT   60
IST921I          TIMES EXP  0           EXP/CONT THRESH 29    / *NA*
IST922I          CURR TOTAL 60          CURR AVAILABLE  60
IST923I          MAX TOTAL  60          MAX USED        0
IST924I ------------------------------------------------------------
IST920I CRA4     BUFF SIZE  4080        EXP INCREMENT   6
IST921I          TIMES EXP  0           EXP/CONT THRESH 2     / *NA*
IST922I          CURR TOTAL 12          CURR AVAILABLE  12
IST923I          MAX TOTAL  12          MAX USED        2
IST924I ------------------------------------------------------------
IST920I CRA8     BUFF SIZE  8176        EXP INCREMENT   6
IST921I          TIMES EXP  0           EXP/CONT THRESH 2     / *NA*
IST922I          CURR TOTAL 12          CURR AVAILABLE  12
IST923I          MAX TOTAL  12          MAX USED        0
IST924I ------------------------------------------------------------
IST449I CSALIMIT = NOLIMIT, CURRENT = 1388K, MAXIMUM = 1388K
IST790I MAXIMUM CSA USED = 1388K
IST1667I SYSTEM CSA LIMIT=1887436K
IST449I CSA24 LIMIT = NOLIMIT, CURRENT = 76K, MAXIMUM = 76K
IST790I MAXIMUM CSA24 USED = 76K
IST595I IRNLIMIT = NOLIMIT, CURRENT = 0K, MAXIMUM = 0K
IST981I VTAM PRIVATE: CURRENT = 4554K, MAXIMUM USED = 4603K
IST924I ------------------------------------------------------------
IST1565I CSA MODULES = 1384K
IST1565I CSA24 MODULES = 40K
IST1565I PRIVATE MODULES = 5205K
IST314I END
```

DISPLAY BNCOSMAP command

```
►►──DISPLAY NET,BNCOSMAP──┬──────────────────┬──┬──────────────────┬──────────────────►◄
                          └─,NETID=netid─────┘  │ ┌─,SCOPE=ONLY────┐ │
                                                └─,SCOPE=──┬─ONLY─┬──┘
                                                           └─ALL──┘
```

Abbreviations

Operand	Abbreviation
DISPLAY	D
SCOPE=ALL	EVERY or E
SCOPE=ONLY	NONE or N

When using an abbreviation in place of an operand, code the abbreviation exactly as shown in the table. For example, when coding the abbreviation for SCOPE=ALL, code only EVERY or E. Do not code SCOPE=E.

Purpose

The DISPLAY BNCOSMAP (border node Class of Service mapping) command displays native and nonnative COS mappings defined for a border node.

Operands

NETID=netid
Specifies the destination network for which native and nonnative border node COS mappings are to be displayed.

SCOPE
Indicates the range of border node COS mappings to be displayed. It is meaningful only if NETID is not specified.

SCOPE=ALL
Displays the COS mappings for all networks served by this border node.

SCOPE=ONLY
Displays border node COS mappings for the default NETID.

Resulting display

The resulting display shows:

- If NETID is specified, all border node COS mappings for the specified network
- If NETID is not specified:
  - For SCOPE=ALL, all COS mappings defined for this border node
  - For SCOPE=ONLY, all border node COS mappings for the default network

Examples

Displaying border node COS mappings for the default network:

```
d net,bncosmap
IST097I DISPLAY ACCEPTED
IST350I DISPLAY TYPE = BNCOSMAP
IST1321I TABLE FOR BNCOSMAP DEFAULT_NETID
IST1322I NON-NATIVE     NATIVE
```

```
IST1323I COS1           COS2
IST1323I COS3           COS2
IST1323I COS4           COS5
IST314I END
```

Displaying all border node COS mappings:

```
d net,bncosmap,scope=all
IST097I DISPLAY ACCEPTED
IST350I DISPLAY TYPE = BNCOSMAP
IST1321I TABLE FOR BNCOSMAP NETB
IST1322I NON-NATIVE     NATIVE
IST1323I COSB3          COSC
IST1323I COSB2          COSB
IST1323I COSB1          COSA
IST924I -------------------------------------------------------------
IST1321I TABLE FOR BNCOSMAP NETC
IST1322I NON-NATIVE     NATIVE
IST1323I COSC3          COSD
IST1323I COSC2          COSC
IST1323I COSC1          COSB
IST314I END
```

DISPLAY CDRMS command

```
►►──DISPLAY NET,CDRMS──┬──────────────────────────────────────────────────────►
                       │                                  (1)
                       └─,ID=──┬─name──────────────────────┬──┘
                               │                           │
                               │      ┌──,──┐              │
                               │      ▼     │              │
                               └──(──┴─name─┴──)───────────┘

►──┬─,MAX=DSPLYDEF_start_option_value─┬──┬─,SCOPE=ALL──────────────────┬──►◄
   │                                  │  │                              │
   └─,MAX=──┬─*──────────────────────┬──┘  └─,SCOPE=──┬─ALL──────────┬──┘
            └─number_of_resources────┘                │              │
                                                      ├─ACT──────────┤
                                                      ├─ACTONLY──────┤
                                                      ├─ACTSESS──────┤
                                                      ├─ALL──────────┤
                                                      ├─CONCT────────┤
                                                      ├─INACT────────┤
                                                      ├─INACTONLY────┤
                                                      ├─PENDING──────┤
                                                      └─RESET────────┘
```

Notes:

1 Depending on the value of the DSPLYWLD start option, wildcard values can be used for this operand.

Abbreviations

Operand	Abbreviation
DISPLAY	D
SCOPE=ACT	ACT or A
SCOPE=ACTONLY	ACTONLY
SCOPE=ACTSESS	ACTSESS
SCOPE=ALL	EVERY or E
SCOPE=CONCT	CONCT
SCOPE=INACT	INACT or I
SCOPE=INACTONLY	INACTONL
SCOPE=PENDING	PEND
SCOPE=RESET	RESET

When using an abbreviation in place of an operand, code the abbreviation exactly as shown in the table. For example, when coding the abbreviation for SCOPE=ALL, code only EVERY or E. Do not code SCOPE=E.

Purpose

The DISPLAY CDRMS (cross-domain resource managers) command displays the status of active cross-domain resource manager (CDRM) major nodes and their subordinate minor nodes.

Note: To display cross-domain resource managers independently of the major nodes that contain them, use the DISPLAY RSCLIST command with IDTYPE=CDRMS.

Operands

ID=name
Specifies the name of one or more active CDRM major nodes whose subordinate resources are to be displayed.

Depending on the value of the DSPLYWLD start option, wildcard values can be used for this operand. For more information about using wildcards, see “Using wildcard names” on page 11.

Attention: Specifying a wildcard name might degrade performance because VTAM checks every CDRM major node in the network.

MAX
Specifies the maximum number of CDRM minor nodes that VTAM displays for this command.

MAX=*
Specifies that the value of the DSPLYMAX start option is used to limit the display output.

MAX=number_of_resources
Specifies the number of CDRM minor nodes to display for this command. The valid range is 1–value of DSPLYMAX. The default is the value specified for the DSPLYDEF start option.

Specifying MAX limits the display output. VTAM searches only for the number of instances that you have specified. When that number is found, VTAM does not search any further. This saves processing time for the command and gives you control over the amount of display output generated by the command. If fewer CDRM program minor nodes are found than you have specified on MAX, VTAM displays only the CDRM minor nodes that are found.

SCOPE
Specifies the desired scope of the display.

Note: If you specify the SCOPE operand without specifying a value SCOPE=ALL is assumed.

SCOPE=ACT
Specifies that information is to be displayed about all active, pending, and connectable CDRM minor nodes within the specified major nodes (or within all major nodes if the ID operand is omitted). If this display is undesirably large, you can use SCOPE=ACTONLY or SCOPE=CONCT to further limit the display.

SCOPE=ACTONLY
Specifies that information is to be displayed about all CDRM minor nodes in an active state within the specified major nodes (or within all major nodes if the ID operand is omitted). The display does **not** include CDRMs in pending or connectable states. If no CDRMs are found in an active state, you can use SCOPE=ACT to broaden the scope of the display to include those in active, connectable, and pending states.

SCOPE=ACTSESS
Specifies that information is to be displayed about all CDRM minor nodes

that are active with sessions within the specified major nodes (or within all major nodes if the ID operand is omitted).

SCOPE=ALL
Specifies that information is to be displayed about all CDRM minor nodes (regardless of their status) within the specified major nodes (or within all major nodes if the ID operand is omitted).

SCOPE=CONCT
Specifies that information is to be displayed about all CDRM minor nodes in a CONCT (connectable) state within the specified major nodes (or within all major nodes if the ID operand is omitted). If no CDRMs are found in a connectable state, you can use SCOPE=ACT to broaden the scope of the display to include those in active, connectable, and pending states.

SCOPE=INACT
Specifies that information is to be displayed about all inactive CDRM minor nodes within the specified major nodes (or within all major nodes if the ID operand is omitted). If this display is undesirably large, you can use SCOPE=INACTONLY or SCOPE=RESET to further limit the display.

SCOPE=INACTONLY
Specifies that information is to be displayed about all inactive CDRM minor nodes within the specified major nodes (or within all major nodes if the ID operand is omitted). Resources in a RESET state are not included in the SCOPE=INACTONLY display.

SCOPE=PENDING
Specifies that information is to be displayed about all pending CDRM minor nodes within the specified major nodes (or within all major nodes if the ID operand is omitted). A pending state is a transient state to or from the fully active state.

SCOPE=RESET
Specifies that information is to be displayed about all CDRM minor nodes in a RESET state within the specified major nodes (or within all major nodes if the ID operand is omitted).

Resulting display

The resulting display shows:

- The name and status of the specified active CDRM major nodes (or all active CDRM major nodes if the ID operand is omitted).
- For each active CDRM major node:
  - The name, status, subarea number, element address, and network identification is displayed for each minor node. This is limited to active, inactive, or pending minor nodes if specified on the SCOPE operand.
  - The network address within the gateway NCP used for the cross-network SSCP-SSCP session is displayed if you are displaying a CDRM in another network.

Examples

Displaying all CDRM major nodes and their minor nodes:

```
d net,cdrms
IST097I DISPLAY ACCEPTED
IST350I DISPLAY TYPE = CDRMS
IST089I CDRM1A   TYPE = CDRM SEGMENT     , ACTIV
IST1546I CDRM     STATUS    SUBAREA ELEMENT NETID    SSCPID
IST1547I SSCP1A    ACTIV          1      1  NETA          1
```

```
IST1547I SSCPAA    NEVAC         10      1  NETA        N/A
IST1547I SSCP2A    NEVAC          2      1  NETA        N/A
IST1547I SSCPBA    NEVAC         11      1  NETA        N/A
IST1547I SSCPCA    NEVAC         12      1  NETA        N/A
IST1547I SSCP7B    ACTIV          5      1  NETB          7
IST1547I SSCP9C    ACTIV          8      3  NETC          9
IST1454I 7 RESOURCE(S) DISPLAYED
IST314I END
```

Displaying a specific CDRM major node and its minor nodes:

```
d net,cdrms,id=cdrm1a
IST097I DISPLAY ACCEPTED
IST350I DISPLAY TYPE = CDRMS
IST089I CDRM1A   TYPE = CDRM SEGMENT     , ACTIV
IST1546I CDRM     STATUS    SUBAREA ELEMENT NETID    SSCPID
IST1547I SSCP1A    ACTIV          1      1  NETA          1
IST1547I SSCPAA    NEVAC         10      1  NETA        N/A
IST1547I SSCP2A    NEVAC          2      1  NETA        N/A
IST1547I SSCPBA    NEVAC         11      1  NETA        N/A
IST1547I SSCPCA    NEVAC         12      1  NETA        N/A
IST1547I SSCP7B    ACTIV          5      1  NETB          7
IST1547I SSCP9C    ACTIV          8      3  NETC          9
IST1454I 7 RESOURCE(S) DISPLAYED
IST314I END
```

Displaying CDRM major nodes and their minor nodes, limiting output to five resources:

```
d net,cdrms,max=5
IST097I DISPLAY ACCEPTED
IST350I DISPLAY TYPE = CDRMS
IST089I CDRM1A   TYPE = CDRM SEGMENT     , ACTIV
IST1546I CDRM     STATUS    SUBAREA ELEMENT NETID    SSCPID
IST1547I SSCP1A    ACTIV          1      1  NETA          1
IST1547I SSCPAA    NEVAC         10      1  NETA        N/A
IST1547I SSCP2A    NEVAC          2      1  NETA        N/A
IST1547I SSCPBA    NEVAC         11      1  NETA        N/A
IST1547I SSCPCA    NEVAC         12      1  NETA        N/A
IST1454I 5 RESOURCE(S) DISPLAYED
IST314I END
```

DISPLAY CDRSCS command

```
►►─DISPLAY NET,CDRSCS──┬──────────────────────────────────────────────────►
                       │                    (1)
                       └─,ID=─┬─name──────┬─┘
                              └─(─name─)──┘

►─┬─,MAX=DSPLYDEF_start_option_value─┬──┬──────────────────────────────►
  │                                  │  │
  └─,MAX=─┬─*──────────────────────┬─┘  └─,NETID=─┬──────────┬─┘
          └─number_of_resources────┘              ├─netid────┤
                                                  └─*NONE────┘

►─┬─,SCOPE=ALL──────────────────┬──────────────────────────────────────►◄
  │                             │
  └─,SCOPE=─┬─ALL──────────────┬─┘
            │                  │
            ├─ACT──────────────┤
            ├─ACTONLY──────────┤
            ├─ACTSESS──────────┤
            ├─ALL──────────────┤
            ├─CONCT────────────┤
            ├─INACT────────────┤
            ├─INACTONLY────────┤
            ├─PENDING──────────┤
            └─RESET────────────┘
```

Notes:

1 Depending on the value of the DSPLYWLD start option, wildcard values can be used for this operand.

Abbreviations

Operand	Abbreviation
DISPLAY	D
SCOPE=ACT	ACT or A
SCOPE=ACTONLY	ACTONLY
SCOPE=ACTSESS	ACTSESS
SCOPE=ALL	EVERY or E
SCOPE=CONCT	CONCT
SCOPE=INACT	INACT or I
SCOPE=INACTONLY	INACTONL
SCOPE=PENDING	PEND
SCOPE=RESET	RESET

When using an abbreviation in place of an operand, code the abbreviation exactly as shown in the table. For example, when coding the abbreviation for SCOPE=ALL, code only EVERY or E. Do not code SCOPE=E.

Purpose

The DISPLAY CDRSCS (cross-domain resources) command displays information about cross-domain resources, including independent LUs.

Note: To display cross-domain resources independently of the major nodes that contain them, use the DISPLAY RSCLIST command with IDTYPE=CDRSCS.

Operands

ID=name
Specifies the name of one or more active CDRSC major nodes whose subordinate resources are to be displayed.

Depending on the value of the DSPLYWLD start option, wildcard values can be used for this operand. For more information about using wildcards, see “Using wildcard names” on page 11.

Attention: Specifying a wildcard name might degrade performance because VTAM checks every CDRSC major node in the network.

MAX
Specifies the maximum number of CDRSC minor nodes that VTAM displays for this command.

MAX=*
Specifies that the value of the DSPLYMAX start option is used to limit the display output.

MAX=number_of_resources
Specifies the number of CDRSC minor nodes to display for this command. The valid range is 1–value of DSPLYMAX. The default is the value specified for the DSPLYDEF start option.

Specifying MAX limits the display output. VTAM searches only for the number of instances that you have specified. When that number is found, VTAM does not search any further. This saves processing time for the command and gives you control over the amount of display output generated by the command. If fewer CDRSC minor nodes are found than you have specified on MAX, VTAM displays only the CDRSC minor nodes that are found.

NETID
Specifies the network identifier for which VTAM is to display CDRSCs.

If you do not specify the NETID operand, CDRSCs are displayed regardless of their network.

If you specify the NETID operand, but do not identify a specific network (that is, a value for *netid* is not entered), CDRSCs within the host network are displayed.

NETID=netid
Specifies that VTAM display CDRSCs within the indicated network.

NETID=*NONE
Specifies that VTAM display only CDRSCs with unknown network identifiers.

Note: While sessions exist between VTAM and a cross-domain resource that was predefined without a network identifier, the resource is

displayed with its real network identifier. When all sessions with the cross-domain resource have ended, the resource returns to having an unknown network identifier.

SCOPE
Specifies the desired scope of the display.

Note: If you specify the SCOPE operand without specifying a value SCOPE=ALL is assumed.

SCOPE=ACT
Specifies that information is to be displayed about all active, pending, and connectable CDRSC minor nodes within the specified major nodes (or within all major nodes if the ID operand is omitted). If this display is undesirably large, you can use SCOPE=ACTONLY or SCOPE=CONCT to further limit the display.

SCOPE=ACTONLY
Specifies that information is to be displayed about all CDRSC minor nodes in an active state within the specified major nodes (or within all major nodes if the ID operand is omitted). The display does **not** include CDRSCs in pending or connectable states. If no CDRSCs are found in an active state, you can use SCOPE=ACT to broaden the scope of the display to include those in active, connectable, and pending states.

SCOPE=ACTSESS
Specifies that information is to be displayed about all CDRSC minor nodes that are active with sessions within the specified major nodes (or within all major nodes if the ID operand is omitted).

SCOPE=ALL
Specifies that information is to be displayed about all CDRSC minor nodes (regardless of their status) within the specified major nodes (or within all major nodes if the ID operand is omitted).

SCOPE=CONCT
Specifies that information is to be displayed about all CDRSC minor nodes in a CONCT (connectable) state within the specified major nodes (or within all major nodes if the ID operand is omitted). If no CDRSCs are found in a connectable state, you can use SCOPE=ACT to broaden the scope of the display to include those in active, connectable, and pending states.

SCOPE=INACT
Specifies that information is to be displayed about all inactive CDRSC minor nodes within the specified major nodes (or within all major nodes if the ID operand is omitted). If this display is undesirably large, you can use SCOPE=INACTONLY or SCOPE=RESET to further limit the display.

SCOPE=INACTONLY
Specifies that information is to be displayed about all inactive CDRSC minor nodes within the specified major nodes (or within all major nodes if the ID operand is omitted). Resources in a RESET state are not included in the SCOPE=INACTONLY display.

SCOPE=PENDING
Specifies that information is to be displayed about all pending CDRSC minor nodes within the specified major nodes (or within all major nodes if the ID operand is omitted). A pending state is a transient state to or from the fully active state.

SCOPE=RESET
Specifies that information is to be displayed about all CDRSC minor nodes in a RESET state within the specified major nodes (or within all major nodes if the ID operand is omitted).

Resulting display

The resulting display shows:

- If ID is specified, the name and status of the specified CDRSC major node or nodes. Inactive CDRSC major nodes are not known to VTAM and are therefore not displayed.
- If ID is not specified, the name and status of each active CDRSC major node in the domain. Inactive CDRSC major nodes are not known to VTAM and are therefore not displayed.
- For each CDRSC major node, the name, status, owning CDRM, and NETID (where applicable) of each subordinate CDRSC minor node (limited to active, inactive, or pending minor nodes if specified on the SCOPE operand).

Examples

Displaying cross-domain resources for a specific network:

```
d net,cdrscs,netid=neta
IST097I DISPLAY ACCEPTED
IST350I DISPLAY TYPE = CDRSCS
IST089I ISTPDILU TYPE = CDRSC SEGMENT    , ACTIV
IST483I A04I0421 ACTIV     , CDRM = ***NA***, NETID = ***NA***
IST483I A04I0422 ACTIV     , CDRM = ***NA***, NETID = ***NA***
IST483I A04I0423 ACTIV     , CDRM = ***NA***, NETID = ***NA***
IST483I C23I92C5 ACTIV     , CDRM = ***NA***, NETID = ***NA***
IST089I ISTCDRDY TYPE = CDRSC SEGMENT    , ACTIV
IST483I C25NVLUC ACTIV----Y, CDRM = ***NA***, NETID = NETA
IST1454I 5 RESOURCE(S) DISPLAYED
IST314I END
```

Displaying a specific cross-domain resource major node and its subordinate resources:

```
d net,cdrscs,id=istpdilu
IST097I DISPLAY ACCEPTED
IST350I DISPLAY TYPE = CDRSCS
IST089I ISTPDILU TYPE = CDRSC SEGMENT    , ACTIV
IST483I A31I3621 ACTIV     , CDRM = ***NA***, NETID = ***NA***
IST483I A31I3622 ACTIV     , CDRM = ***NA***, NETID = ***NA***
IST483I A31I3623 ACTIV     , CDRM = ***NA***, NETID = ***NA***
IST483I A31I3624 ACTIV     , CDRM = ***NA***, NETID = ***NA***
IST483I A31I3625 ACTIV     , CDRM = ***NA***, NETID = ***NA***
IST483I A31I3631 ACTIV     , CDRM = ***NA***, NETID = ***NA***
IST483I A31I3632 ACTIV     , CDRM = ***NA***, NETID = ***NA***
IST483I A31I3633 ACTIV     , CDRM = ***NA***, NETID = ***NA***
IST483I A31I3634 ACTIV     , CDRM = ***NA***, NETID = ***NA***
IST483I A31I3635 ACTIV     , CDRM = ***NA***, NETID = ***NA***
IST483I A31I4821 ACTIV     , CDRM = ***NA***, NETID = ***NA***
IST483I A03I88B3 ACTIV     , CDRM = ***NA***, NETID = ***NA***
IST483I A03I88B4 ACTIV     , CDRM = ***NA***, NETID = ***NA***
IST483I A03I88B5 ACTIV     , CDRM = ***NA***, NETID = ***NA***
IST483I A03I88C1 ACTIV     , CDRM = ***NA***, NETID = ***NA***
IST483I A03I88C2 ACTIV     , CDRM = ***NA***, NETID = ***NA***
IST483I A03I88C3 ACTIV     , CDRM = ***NA***, NETID = ***NA***
IST483I A03I88C4 ACTIV     , CDRM = ***NA***, NETID = ***NA***
IST483I A03I88C5 ACTIV     , CDRM = ***NA***, NETID = ***NA***
IST1454I 19 RESOURCE(S) DISPLAYED FOR ID=ISTPDILU
IST314I END
```

DISPLAY CDRSCS

Displaying all cross-domain resources:

```
d net,cdrscs
IST097I DISPLAY ACCEPTED
IST350I DISPLAY TYPE = CDRSCS
IST089I ISTPDILU TYPE = CDRSC SEGMENT    , ACTIV
IST483I A04I0421 ACTIV     , CDRM = ***NA***, NETID = ***NA***
IST483I A04I0422 ACTIV     , CDRM = ***NA***, NETID = ***NA***
IST483I A04I0423 ACTIV     , CDRM = ***NA***, NETID = ***NA***
IST483I A04I0424 ACTIV     , CDRM = ***NA***, NETID = ***NA***
IST483I A04I0425 ACTIV     , CDRM = ***NA***, NETID = ***NA***
IST483I C23I92C2 ACTIV     , CDRM = ***NA***, NETID = ***NA***
IST483I C23I92C3 ACTIV     , CDRM = ***NA***, NETID = ***NA***
IST483I C23I92C4 ACTIV     , CDRM = ***NA***, NETID = ***NA***
IST483I C23I92C5 ACTIV     , CDRM = ***NA***, NETID = ***NA***
IST089I ISTCDRDY TYPE = CDRSC SEGMENT    , ACTIV
IST483I C25NVLUC ACTIV----Y, CDRM = ***NA***, NETID = NETA
IST483I B01NVLUC ACTIV----Y, CDRM = ***NA***, NETID = NETA
IST483I A81NVLUC ACTIV----Y, CDRM = ***NA***, NETID = NETA
IST483I A03D207F ACT/S----Y, CDRM = A01N    , NETID = NETA
IST483I C23D92CE ACT/S----Y, CDRM = A01N    , NETID = NETC
IST483I C23D48CC ACT/S----Y, CDRM = A01N    , NETID = NETC
IST483I C23D921D ACT/S----Y, CDRM = A01N    , NETID = NETX
IST483I C23D527B ACT/S----Y, CDRM = A01N    , NETID = NETC
IST483I C23D48CD ACT/S----Y, CDRM = A01N    , NETID = NETC
IST483I C23D486B ACT/S----Y, CDRM = A01N    , NETID = NETC
IST483I C23D486D ACT/S----Y, CDRM = A01N    , NETID = NETC
IST483I C23D92AD ACT/S----Y, CDRM = A01N    , NETID = NETC
IST483I A03D203B ACT/S----Y, CDRM = A01N    , NETID = NETZ
IST483I A03D167C ACT/S----Y, CDRM = A01N    , NETID = NETA
IST483I A03D883D ACT/S----Y, CDRM = A01N    , NETID = NETZ
IST483I C23D486E ACT/S----Y, CDRM = A01N    , NETID = NETC
IST483I C23D48AC ACT/S----Y, CDRM = A01N    , NETID = NETC
IST483I C23D52CD ACT/S----Y, CDRM = A01N    , NETID = NETC
IST483I A31D926C ACT/S----Y, CDRM = A01N    , NETID = NETA
IST483I A31D48CC ACT/S----Y, CDRM = A01N    , NETID = NETA
IST483I A04D209B ACT/S----Y, CDRM = A01N    , NETID = NETA
IST483I C23D527F ACT/S----Y, CDRM = A01N    , NETID = NETC
IST483I C23D483F ACT/S----Y, CDRM = A01N    , NETID = NETZ
IST483I C23D524F ACT/S----Y, CDRM = A01N    , NETID = NETC
IST483I C01NVLUC ACT/S----Y, CDRM = A01N    , NETID = NETC
IST483I A02NVLUC ACT/S----Y, CDRM = A01N    , NETID = NETA
IST483I ECHO02A  ACT/S----Y, CDRM = A01N    , NETID = NETA
IST483I A50NVLUC ACT/S----Y, CDRM = A01N    , NETID = NETA
IST483I A500N    ACT/S----Y, CDRM = A01N    , NETID = NETA
IST483I A02N     ACT/S----Y, CDRM = A01N    , NETID = NETA
IST1454I 39 RESOURCE(S) DISPLAYED
IST314I END
```

Displaying cross-domain resources limiting output to five resources:

```
d net,cdrscs,max=5
IST097I DISPLAY ACCEPTED
IST350I DISPLAY TYPE = CDRSCS
IST089I ISTPDILU TYPE = CDRSC SEGMENT    , ACTIV
IST1358I NO QUALIFYING MATCHES
IST089I ISTCDRDY TYPE = CDRSC SEGMENT    , ACTIV
IST1358I NO QUALIFYING MATCHES
IST089I CDRSC1A  TYPE = CDRSC SEGMENT    , ACTIV
IST483I APPL8    ACTIV--S--, CDRM = SSCP1A  , NETID = ***NA***
IST483I APPL9    NEVAC--S--, CDRM = SSCP1A  , NETID = ***NA***
IST483I L4A3278A ACTIV     , CDRM = SSCP2A  , NETID = NETA
IST483I L4A3279A ACTIV     , CDRM = SSCP2A  , NETID = NETA
IST483I L4A3767D ACTIV     , CDRM = SSCP2A  , NETID = NETA
IST1315I DISPLAY TRUNCATED AT MAX = 5
IST1454I 5 RESOURCE(S) DISPLAYED
IST314I END
```

DISPLAY CLSTRS command

```
►►──DISPLAY NET,CLSTRS──┬──────────────────────────────────────────────────────►
                        │                                   (1)
                        └─,ID=──┬─name──────────────────────┬──┘
                                │                           │
                                │   ┌──────────────┐        │
                                │   ▼              │        │
                                └─(──┬─name──┬──)──┘        │
                                     └──────┘               │

►──┬─,IDTYPE=*──────────────┬──┬─,LIST=ALL──────────┬──────────────────────────►
   │                        │  │                    │
   └─,IDTYPE=──┬─LCLSNA──┬──┘  └─,LIST=──┬─ALL───┬──┘
               ├─PUT45───┤               └─COUNT─┘
               ├─SWSEG───┤
               └─*───────┘

►──┬─,MAX=DSPLYDEF_start_option_value──┬──┬──────────────────────────────────►
   │                                   │  │
   └─,MAX=──┬─*──────────────────────┬──┘  └─,OWNER=──┬─host_name──┬──┘
            └─number_of_resources────┘                 └─*NONE──────┘

►──┬─,SCOPE=ALL──────────────────────┬──────────────────────────────────────►◄
   │                                 │
   └─,SCOPE=──┬─ALL──────────────────┬──┘
              │                      │
              ├─ACT────────────────┤
              ├─ACTONLY────────────┤
              ├─ALL────────────────┤
              ├─CONCT──────────────┤
              ├─IACTIVE────────────┤
              ├─IINACT─────────────┤
              ├─INACT──────────────┤
              ├─INACTONLY──────────┤
              ├─PENDING────────────┤
              ├─RELSD──────────────┤
              └─RESET──────────────┘
```

Notes:

1 Depending on the value of the DSPLYWLD start option, wildcard values can be used for this operand.

Abbreviations

Operand	Abbreviation
DISPLAY	D
SCOPE=ACT	ACT or A
SCOPE=ACTONLY	ACTONLY
SCOPE=ALL	EVERY or E
SCOPE=CONCT	CONCT
SCOPE=INACT	INACT or I
SCOPE=INACTONLY	INACTONL
SCOPE=PENDING	PEND

Operand	Abbreviation
SCOPE=RELSD	RELSD
SCOPE=RESET	RESET

When using an abbreviation in place of an operand, code the abbreviation exactly as shown in the table. For example, when coding the abbreviation for SCOPE=ALL, code only EVERY or E. Do not code SCOPE=E.

Purpose

The DISPLAY CLSTRS (clusters) command displays the status of physical units (PUs) subordinate to an NCP node, a local SNA node, or a switched subarea node.

Note: To display physical units independently of the major nodes that contain them, use the DISPLAY RSCLIST command with IDTYPE=CLSTRS.

Operands

ID=name
Specifies the name of one or more active NCP, local SNA, or switched major nodes whose subordinate PUs are to be displayed.

If OWNER is also specified on this command, the value of ID must match the name of an NCP major node.

Depending on the value of the DSPLYWLD start option, wildcard values can be used for this operand. For more information about using wildcards, see “Using wildcard names” on page 11.

Attention: Specifying a wildcard name might degrade performance because VTAM checks every NCP, local SNA, and switched major node in the network.

IDTYPE
Specifies the type of major node that the ID operand names. If several types of resources share the same name, IDTYPE can be used to identify which resource the command should act on. The default is IDTYPE=*.

IDTYPE=LCLSNA
Displays only the subordinate PUs defined in local SNA major nodes.

IDTYPE=PUT45
Displays only the subordinate PUs defined in PU type 4 and PU type 5 major nodes.

IDTYPE=SWSEG
Displays only the subordinate PUs defined in switched major nodes.

IDTYPE=*
Displays the subordinate PUs defined in NCP major nodes, local SNA major nodes, and switched major nodes.

LIST
Specifies the level of detail to display.

LIST=COUNT
Displays only the number of resouces in each state, based on the filters specified in the SCOPE, OWNER, and IDTYPE keywords.

LIST=ALL
Displays information about all resources, based on the filters specified in the SCOPE, OWNER, and IDTYPE keywords.

MAX
Specifies the maximum number of resources that VTAM displays for this command. This operand is ony valid with LIST=ALL.

MAX=*
Specifies that the value of the DSPLYMAX start option is used to limit the display output.

MAX=number_of_resources
Specifies the number of PUs to display for this command. The valid range is 1–value of DSPLYMAX. The default is the value specified for the DSPLYDEF start option.

Specifying MAX limits the display output. VTAM searches only for the number of instances that you have specified. When that number is found, VTAM does not search any further. This saves processing time for the command and gives you control over the amount of display output generated by the command. If fewer PUs are found than you have specified on MAX, VTAM displays only the PUs that are found.

OWNER
Specifies whether PUs defined with the OWNER operand are to be displayed. This operand is only valid when the name or the wildcard value specified on the ID operand matches the name of an NCP major node.

OWNER=host_name
Specifies that only PUs whose owning SSCP (as determined by the OWNER operand on the GROUP, LINE, or PU definition statements) matches the *host_name* specified are to be displayed.

OWNER=*NONE
Specifies that only PUs **without** an OWNER operand on the GROUP, LINE, or PU definition statements are to be displayed.

SCOPE
Specifies the desired scope of the display.

Note: If you specify the SCOPE operand without specifying a value SCOPE=ALL is assumed.

SCOPE=ACT
Specifies that information is to be displayed about all active, pending, and connectable PUs within the specified major nodes (or within all NCP, local SNA, and switched major nodes if the ID operand is omitted). The information is displayed for the major node as well. If this display is undesirably large, you can use SCOPE=ACTONLY or SCOPE=CONCT to further limit the display.

SCOPE=ACTONLY
Specifies that information is to be displayed about all PUs in an active state within the specified major nodes (or within all NCP, local SNA, and switched major nodes if the ID operand is omitted). The display does **not** include PUs in pending or connectable states. If no PUs are found in an active state, you can use SCOPE=ACT to broaden the scope of the display to include those in active, connectable, and pending states.

SCOPE=ALL
Specifies that information is to be displayed about all PUs (regardless of status) within the specified major nodes (or within all NCP, local SNA, and switched major nodes if the ID operand is omitted). The information is displayed for the major node as well.

SCOPE=CONCT
Specifies that information is to be displayed about all PUs in a CONCT (connectable) state within the specified major nodes (or within all NCP, local SNA, and switched major nodes if the ID operand is omitted). If no PUs are found in a connectable state, you can use SCOPE=ACT to broaden the scope of the display to include those in active, connectable, and pending states

SCOPE=IACTIVE
Specifies that information is to be displayed about all PUs within the specified major nodes (or within all NCP, local SNA, and switched major nodes if the ID operand is omitted) for which the minor node is ISTATUS=INACTIVE.

SCOPE=IINACT
Specifies that information is to be displayed about all PUs within the specified major nodes (or within all NCP, local SNA, and switched major nodes if the ID operand is omitted) for which the minor node is ISTATUS=ACTIVE.

SCOPE=INACT
Specifies that information is to be displayed about all inactive PUs within the specified major nodes (or within all NCP, local SNA, and switched major nodes if the ID operand is omitted). The information is displayed for the major node as well. If this display is undesirably large, you can use SCOPE=INACTONLY or SCOPE=RESET to further limit the display.

SCOPE=INACTONLY
Specifies that information is to be displayed about all inactive PUs within the specified major nodes (or within all major nodes if the ID operand is omitted). Resources in a RESET state are not included in the SCOPE=INACTONLY display.

SCOPE=PENDING
Specifies that information is to be displayed about all pending PUs within the specified major nodes (or within all NCP, local SNA, and switched major nodes if the ID operand is omitted). A pending state is a transient state to or from the fully active state.

SCOPE=RELSD
Specifies that the information is to be displayed about all PUs in a RELSD state within the specified major nodes (or within all NCP, local SNA, and switched major nodes if the ID operand is omitted).

SCOPE=RESET
Specifies that information is to be displayed about all PUs in a RESET state within the specified major nodes (or within all NCP, local SNA, and switched major nodes if the ID operand is omitted).

Resulting display

The resulting display shows:

- For each active major node defining physical units, the major node name, status, and type, the names of the active, inactive, pending, or all physical units (as

determined by the SCOPE operand) associated with the major node, and the status and node type for each subordinate resource listed.

- For local SNA major nodes, the channel device name for every physical unit in the local SNA major node.

Examples

Displaying all physical units (clusters) subordinate to a specific major node:

```
d net,clstrs,id=c23smnc
IST097I DISPLAY ACCEPTED
IST350I DISPLAY TYPE = CLUSTERS/PHYS UNITS
IST089I C23SMNC  TYPE = SW SNA MAJ NODE  , ACTIV
IST089I C23P922  TYPE = PU_T2            , CONCT
IST089I C23P923  TYPE = PU_T2            , CONCT
IST089I C23P925  TYPE = PU_T2            , CONCT
IST089I C23P926  TYPE = PU_T2            , CONCT
IST089I C23P928  TYPE = PU_T2            , CONCT
IST089I C23P929  TYPE = PU_T2            , CONCT
IST089I C23P92B  TYPE = PU_T2            , CONCT
IST089I C23P92C  TYPE = PU_T2            , CONCT
IST1454I 9 RESOURCE(S) DISPLAYED FOR ID=C23SMNC
IST314I END
```

Displaying all physical units (clusters) owned by a specific SSCP:

```
d net,clstrs,owner=sscp1a
IST097I DISPLAY ACCEPTED
IST350I DISPLAY TYPE = CLUSTERS/PHYS UNITS
IST089I NCP3AA1  TYPE = PU T4/5          , PCTD1
IST089I P3A3767A TYPE = PU_T1            , NEVAC
IST089I P3A3274A TYPE = PU_T2            , NEVAC
IST089I P3A4956A TYPE = PU_T2            , NEVAC
IST089I P3A3767D TYPE = PU_T1            , NEVAC
IST089I P3A4956G TYPE = PU_T2            , NEVAC
IST089I P3A3767C TYPE = PU_T1            , NEVAC
IST089I P3A4956E TYPE = PU_T2            , NEVAC
IST089I P3A4956F TYPE = PU_T2            , NEVAC
IST089I P3A4956C TYPE = PU_T2            , NEVAC
IST089I P3A3274B TYPE = PU_T2            , NEVAC
IST089I P3A3767B TYPE = PU_T1            , NEVAC
IST089I P3A4956D TYPE = PU_T2            , NEVAC
IST089I P3A3274C TYPE = PU_T2            , NEVAC
IST1454I 14 RESOURCE(S) DISPLAYED
IST314I END
```

Displaying all physical units (clusters):

```
d net,clstrs
IST097I DISPLAY ACCEPTED
IST350I DISPLAY TYPE = CLUSTERS/PHYS UNITS
IST089I ISTDSWMN TYPE = SW SNA MAJ NODE  , ACTIV
IST089I A04P88A  TYPE = PU_T2            , ACTIV---X-
IST089I A04P887  TYPE = PU_T2            , ACTIV---X-
IST089I A04P884  TYPE = PU_T2            , ACTIV---X-
IST089I A04P881  TYPE = PU_T2            , ACTIV---X-
IST089I C23SMNC  TYPE = SW SNA MAJ NODE  , ACTIV
IST089I C23P922  TYPE = PU_T2            , CONCT
IST089I C23P923  TYPE = PU_T2            , CONCT
IST089I C23P925  TYPE = PU_T2            , CONCT
IST089I C23P926  TYPE = PU_T2            , CONCT
IST089I C23P928  TYPE = PU_T2            , CONCT
IST089I C23P929  TYPE = PU_T2            , CONCT
IST089I C23P92B  TYPE = PU_T2            , CONCT
IST089I C23P92C  TYPE = PU_T2            , CONCT
IST089I A04SMNC  TYPE = SW SNA MAJ NODE  , ACTIV
IST089I A04P882  TYPE = PU_T2            , ACTIV--L--
```

```
IST089I A04P883  TYPE = PU_T2            , ACTIV--L--
IST089I A04P885  TYPE = PU_T2            , ACTIV--L--
IST089I A04P886  TYPE = PU_T2            , ACTIV--L--
IST089I A04P888  TYPE = PU_T2            , ACTIV--L--
IST089I A04P889  TYPE = PU_T2            , ACTIV--L--
IST089I A04P88B  TYPE = PU_T2            , ACTIV--L--
IST089I A04P88C  TYPE = PU_T2            , ACTIV--L--
IST089I SMNA01C  TYPE = SW SNA MAJ NODE  , ACTIV
IST089I A50NETNA TYPE = PU_T2            , ACTIV--L--
IST089I A02NETNA TYPE = PU_T2            , ACTIV--L--
IST089I A02NETNB TYPE = PU_T2            , ACTIV--L--
IST089I A0462ZC  TYPE = PU T4/5          , ACTIV
IST089I A04C001  TYPE = PU_T2            , NEVAC
IST089I A04C002  TYPE = PU_T2            , NEVAC
IST089I A04C011  TYPE = PU_T2            , NEVAC
IST089I A04C012  TYPE = PU_T2            , NEVAC
IST089I A04C031  TYPE = PU_T2            , NEVAC
IST089I A04C032  TYPE = PU_T2            , NEVAC
IST089I A04NXXX  TYPE = PU_T2            , NEVAC----T
IST089I A04P041  TYPE = PU_T2            , NEVAC
IST089I A04P042  TYPE = PU_T2            , NEVAC
IST089I A04P043  TYPE = PU_T2            , NEVAC
IST1454I 38 RESOURCE(S) DISPLAYED
IST314I END
```

Displaying physical units (clusters), limiting output to three resources:

```
d net,clstrs,max=3
IST097I DISPLAY ACCEPTED
IST350I DISPLAY TYPE = CLUSTERS/PHYS UNITS
IST089I NCP3AA1  TYPE = PU T4/5          , PCTD1
IST089I P3A3767A TYPE = PU_T1            , NEVAC
IST089I P3A3274A TYPE = PU_T2            , NEVAC
IST1315I DISPLAY TRUNCATED AT MAX = 3
IST1454I 3 RESOURCE(S) DISPLAYED
IST314I END
```

Displaying LIST=COUNT:

```
d net,clstrs,id=ncp3ab8,list=count
IST097I DISPLAY ACCEPTED
IST350I DISPLAY TYPE = CLUSTERS/PHYS UNITS
IST089I NCP3AB8  TYPE = PU T4/5          , ACTIV
IST1747I SUMMARY OF STATE INFORMATION:
IST1748I RESET =          4  RELSD =          2  NEVAC =         36
IST1748I ACTIV =          3
IST1454I 45 RESOURCE(S) DISPLAYED FOR ID=NCP3AB8
IST314I END
```

DISPLAY CNOS command

```
►►──DISPLAY NET,CNOS──,ID=appl_name──,LUNAME=lu_name──────────────────────►
►──┬──────────────────────────┬──────────────────────────────────────────►◄
   └─,LOGMODE=logon_mode_name─┘
```

Abbreviations

Operand	Abbreviation
DISPLAY	D
LOGMODE	LOG
LUNAME	LU

Purpose

The DISPLAY CNOS (change number of sessions) command displays LU 6.2 information associated with an application program and a partner LU and logon mode.

Operands

ID=appl_name
Specifies the name of the LU 6.2 application program about which the information is requested. The value specified for *appl_name* cannot be a network-qualified name.

LOGMODE=logon_mode_name
Specifies the logon mode name for which the requested LU 6.2 information applies. If you do not specify a logon mode name, SESSCAP, CONVSECL, CONVSECP, and SYNCLVL are the only fields shown for the partner LU.

LUNAME=lu_name
Specifies the name of the partner LU about which the LU 6.2 information is requested. The name can be a network-qualified name in the form of *netid.luname*.

If PARMS=(NQNAMES=NO) is coded on the ACB macro of the resource named on the ID operand, and a network-qualified name is specified, the network identifier is ignored.

If PARMS=(NQNAMES=YES) is coded on the ACB macro, *luname* can be either a non-network-qualified name or a network-qualified name. If *luname* is a non-network-qualified name, the command is processed against all LUs with that non-network-qualified name across all networks. If *luname* is a network-qualified name, the command is processed against the LU in the specified network.

Resulting display

The resulting VTAM display shows:

- The LU 6.2 application program name, LU name, and logon mode name of the requested session
- The negotiation values and security level values

Examples

Displaying CNOS for all logon modes:

```
d net,cnos,id=appcap05,luname=appcap06
IST097I DISPLAY ACCEPTED
IST1001I ID= APPCAP05 LUNAME= NETA.APPCAP06
IST1002I RCPRI=0000 RCSEC=0000
IST1005I SESSCAP =PARALLEL CONVSECL=AVPV     CONVSECP=AVPV
IST1005I SYNCLVL =SYNCPT   CONVCAP =FDX
IST314I END
```

Displaying CNOS for a specific logon mode:

```
d net,cnos,id=appcap05,luname=appcap06,logmode=batch
IST097I DISPLAY ACCEPTED
IST1001I ID= APPCAP05 LUNAME= NETA.APPCAP06 LOGMODE= BATCH
IST1002I RCPRI=0000 RCSEC=0000
IST1005I SESSCAP =PARALLEL CONVSECL=AVPV     CONVSECP=AVPV
IST1005I DRAINL  =NO       DRAINR  =NO       DDRAINL =NALLOW
IST1005I SESSCNT =       0 FREECNT =       0 QALLOC  =       0
IST1005I WINLCNT =       0 WINRCNT =       0 AUTOSES =       0
IST1005I DRESPL  =NALLOW   RESP    =***NA*** DELETE  =NALLOW
IST1005I SYNCLVL =SYNCPT   CONVCAP =FDX
IST1003I SESSLIM CNOS=       2 DEFINE=       2
IST1003I MINWINL CNOS=       1 DEFINE=       1
IST1003I MINWINR CNOS=       1 DEFINE=       1
IST314I END
```

Displaying CNOS for all logon modes and partner LU name is found in more than one network:

```
d net,cnos,id=appcap05,luname=appcap06
IST097I DISPLAY ACCEPTED
IST1001I ID= APPCAP05 LUNAME= NETB.APPCAP06
IST1002I RCPRI=0000 RCSEC=0000
IST1005I SESSCAP =PARALLEL CONVSECL=AVPV     CONVSECP=AVPV
IST1005I SYNCLVL =SYNCPT   CONVCAP =HDX
IST1001I ID= APPCAP05 LUNAME= NETA.APPCAP06
IST1002I RCPRI=0000 RCSEC=0000
IST1005I SESSCAP =PARALLEL CONVSECL=AVPV     CONVSECP=AVPV
IST1005I SYNCLVL =SYNCPT   CONVCAP =HDX
IST314I END
```

Displaying CNOS for a specific logon mode and the partner LU is found in more than one network:

```
d net,cnos,id=appcap05,luname=appcap06,logmode=batch
IST097I DISPLAY ACCEPTED
IST1001I ID= APPCAP05 LUNAME= NETB.APPCAP06 LOGMODE= BATCH
IST1002I RCPRI=0000 RCSEC=0000
IST1005I SESSCAP =PARALLEL CONVSECL=AVPV     CONVSECP=AVPV
IST1005I DRAINL  =NO       DRAINR  =NO       DDRAINL =NALLOW
IST1005I SESSCNT =       1 FREECNT =       0 QALLOC  =       0
IST1005I WINLCNT =       1 WINRCNT =       0 AUTOSES =       0
IST1005I DRESPL  =NALLOW   RESP    =***NA*** DELETE  =NALLOW
IST1005I SYNCLVL =SYNCPT   CONVCAP =HDX
IST1003I SESSLIM CNOS=       2 DEFINE=       2
IST1003I MINWINL CNOS=       1 DEFINE=       1
IST1003I MINWINR CNOS=       1 DEFINE=       1
IST1001I ID= APPCAP05 LUNAME= NETA.APPCAP06 LOGMODE= BATCH
IST1002I RCPRI=0000 RCSEC=0000
IST1005I SESSCAP =PARALLEL CONVSECL=AVPV     CONVSECP=AVPV
IST1005I DRAINL  =NO       DRAINR  =NO       DDRAINL =NALLOW
IST1005I SESSCNT =       1 FREECNT =       0 QALLOC  =       0
IST1005I WINLCNT =       1 WINRCNT =       0 AUTOSES =       0
IST1005I DRESPL  =NALLOW   RESP    =***NA*** DELETE  =NALLOW
IST1005I SYNCLVL =SYNCPT   CONVCAP =HDX
```

```
IST1003I SESSLIM CNOS=       2 DEFINE=       2
IST1003I MINWINL CNOS=       1 DEFINE=       1
IST1003I MINWINR CNOS=       1 DEFINE=       1
IST314I END
```

DISPLAY CONVID command

```
►►─DISPLAY NET,CONVID──,ID=appl_name──┬─────────────────────────┬──────────────►
                                      ├─,ETIME=0────────────────┤
                                      └─,ETIME=number_of_minutes─┘

►──┬──────────────────────────┬──┬──────────────────────────┬──────────────────►◄
   └─,LOGMODE=logon_mode_name─┘  └─,LUNAME=lu_name──────────┘
```

Abbreviations

Operand	Abbreviation
DISPLAY	D
LOGMODE	LOG
LUNAME	LU

Purpose

The DISPLAY CONVID (conversation ID) command provides information about active conversations with the specified application program. You can limit display of information to conversations that have had no activity for a specified period of time.

Note: This command causes VTAM to check every conversation and could have an adverse effect on VTAM performance.

You can use this command during problem determination to view a record of conversation information between logical unit (LU) partners.

Conversations that are in the process of allocating and deallocating are temporarily suspended while this command is being processed. Conversations that are sending or receiving continue to operate while this command is running.

Operands

ETIME=number_of_minutes
Specifies the minimum amount of time that can elapse with no API activity before VTAM displays its record of conversations between the LU partners.

For example, if you specify ETIME=5, VTAM displays only information about conversations that have had no activity for at least 5 minutes.

You can specify 0–999 minutes as a value for ETIME. If you use 0 (the default), VTAM displays a record of all conversations.

ID=appl_name
Identifies the name of the LU 6.2 application to which the requested conversation information applies. This value cannot be a network-qualified name.

LOGMODE=logon_mode_name
Specifies the logon mode name to which the requested conversation information applies. Active conversations that use the specified logon mode name are displayed.

LUNAME=lu_name

Specifies the name of the partner LU to which the requested conversation information applies. Active conversations with the specified partner LU are displayed. The name can be a network-qualified name in the form of *netid.luname*.

If PARMS=(NQNAMES=NO) is coded on the ACB macro of the resource named on the ID operand, and a network-qualified name is specified, the network identifier is ignored.

If PARMS=(NQNAMES=YES) is coded on the ACB macro, *luname* can be either a non-network-qualified name or a network-qualified name. If *luname* is a non-network-qualified name, the command is processed against all LUs with that non-network-qualified name across all networks. If *luname* is a network-qualified name, the command is processed against the LU in the specified network.

Resulting display

The resulting VTAM display shows:

- The names of the partner LUs in the conversations
- Each partner LU's logon mode name
- Each conversation's identifier
- Each conversation's session identifier
- The availability of HPDT services at the time the session was established
- Each conversation's status
- Each conversation's elapse time

Examples

Displaying active conversations with a specific partner LU:

```
d net,convid,id=appcap05,luname=appcap06
IST097I DISPLAY ACCEPTED
IST1040I CONVERSATION(S) FOUND FOR APPCAP05
IST1007I PARTNER = NETA.APPCAP06, LOGMODE = BATCH
IST1008I CONVID = 01000003, STATUS = F_SR, ETIME = 2
IST1009I SID = D5376DF41F2EDFF2, HPDT = NO
IST924I -------------------------------------------------------------
IST314I END
```

Displaying all active conversations for a specific LU:

```
d net,convid,id=appcap05
IST097I DISPLAY ACCEPTED
IST1040I CONVERSATION(S) FOUND FOR APPCAP05
IST1007I PARTNER = NETB.APPCAP07, LOGMODE = BATCH
IST1008I CONVID = 01000009, STATUS = SEND, ETIME = 2
IST1009I SID = E7F33883005B53C7, HPDT = YES
IST924I -------------------------------------------------------------
IST1007I PARTNER = NETB.APPCAP06, LOGMODE = BATCH
IST1008I CONVID = 01000008, STATUS = SEND, ETIME = 2
IST1009I SID = E7F33883005B53C6, HPDT = YES
IST924I -------------------------------------------------------------
IST1007I PARTNER = NETA.APPCAP06, LOGMODE = BATCH
IST1008I CONVID = 01000006, STATUS = SEND, ETIME = 4
IST1009I SID = E7F33883005B53C5, HPDT = YES
IST924I -------------------------------------------------------------
IST314I END
```

Displaying active conversations for a specific logmode:

```
d net,convid,id=appcap05,logmode=interact
IST097I DISPLAY ACCEPTED
IST1040I CONVERSATION(S) FOUND FOR APPCAP05
IST1007I PARTNER = NETB.APPCAP06, LOGMODE = INTERACT
IST1008I CONVID = 01000011, STATUS = SEND, ETIME = 10
IST1009I SID = EAABEEC32CD34A3E, HPDT = NO
IST924I -------------------------------------------------------------
IST1007I PARTNER = NETA.APPCAP06, LOGMODE = INTERACT
IST1008I CONVID = 0100000C, STATUS = SEND, ETIME = 14
IST1009I SID = EAABEEC32CD34A3B, HPDT = NO
IST924I -------------------------------------------------------------
IST314I END
```

Displaying active conversations for a specific logmode and partner LU:

```
d net,convid,id=appcap05,luname=appcap06,logmode=batch
IST097I DISPLAY ACCEPTED
IST1040I CONVERSATION(S) FOUND FOR APPCAP05
IST1007I PARTNER = NETB.APPCAP06, LOGMODE = BATCH
IST1008I CONVID = 01000008, STATUS = SEND, ETIME = 18
IST1009I SID = EAABEEC32CD34A39, HPDT = YES
IST924I -------------------------------------------------------------
IST1007I PARTNER = NETA.APPCAP06, LOGMODE = BATCH
IST1008I CONVID = 01000006, STATUS = SEND, ETIME = 20
IST1009I SID = EAABEEC32CD34A38, HPDT = YES
IST924I -------------------------------------------------------------
IST314I END
```

Displaying active conversations with no API activity for more than two minutes and the partner LU is found in more than one network:

```
d net,convid,id=appcap05,luname=appcap06,etime=2
IST097I DISPLAY ACCEPTED
IST1040I CONVERSATION(S) FOUND FOR APPCAP05
IST1007I PARTNER = NETB.APPCAP06, LOGMODE = INTERACT
IST1008I CONVID = 01000011, STATUS = SEND, ETIME = 11
IST1009I SID = EAABEEC32CD34A3E, HPDT = YES
IST924I -------------------------------------------------------------
IST1007I PARTNER = NETB.APPCAP06, LOGMODE = HOLLY
IST1008I CONVID = 0100000F, STATUS = SEND, ETIME = 13
IST1009I SID = EAABEEC32CD34A3D, HPDT = YES
IST924I -------------------------------------------------------------
IST1007I PARTNER = NETA.APPCAP06, LOGMODE = INTERACT
IST1008I CONVID = 0100000C, STATUS = SEND, ETIME = 15
IST1009I SID = EAABEEC32CD34A3B, HPDT = YES
IST924I -------------------------------------------------------------
IST1007I PARTNER = NETB.APPCAP06, LOGMODE = BATCH
IST1008I CONVID = 01000008, STATUS = SEND, ETIME = 18
IST1009I SID = EAABEEC32CD34A39, HPDT = YES
IST924I -------------------------------------------------------------
IST1007I PARTNER = NETA.APPCAP06, LOGMODE = BATCH
IST1008I CONVID = 01000006, STATUS = SEND, ETIME = 20
IST1009I SID = EAABEEC32CD34A38, HPDT = YES
IST924I -------------------------------------------------------------
IST314I END
```

DISPLAY COS command

Display the Class of Service (CoS) table name for a particular network or all networks associated with a specified PU type 4 or 5:

```
                                                          ┌─,TYPE=SUBAREA─┐
►►─DISPLAY NET,COS──┬──────────────┬──┬──────────────────┬──┴───────────────┴──►◄
                    └─,ID=pu_name──┘  └─,NETID=──┬─*────┬┘
                                                 └─netid─┘
```

Display the APPN Class of service table entries and the APPNCOS table used to create each entry:

```
►►─DISPLAY NET,COS,TYPE=APPN──────────────────────────────────────────────►◄
```

Abbreviations

Operand	Abbreviation
DISPLAY	D

Purpose

When TYPE=SUBAREA is coded (or defaulted):

- The DISPLAY COS (Class of Service) command displays the Class of Service (CoS) table name for a particular network or all networks associated with a specified PU type 4 or 5.
- If a COS table is not defined for a network, VTAM displays the default table name (ISTSDCOS). If the default table is not loaded, VTAM indicates that the default algorithm will be used to determine the Class of Service.

When TYPE=APPN is coded:

- The DISPLAY COS command displays the APPN Class of service table entries, the last APPNCOS table that was used to create or update each entry, and the time the entry was created or last updated.
- DISPLAY COS can be issued from either a network node or an end node.

Operands

ID=pu_name

Identifies the physical unit type 4 or type 5 for which the COS table is displayed. If *pu_name* is not specified, ID defaults to the host physical unit name specified on the HOSTPU start option. If HOSTPU was not specified in the start option list, then ISTPUS is used as the default.

The resource identified by *pu_name* must be active for the display to occur.

If an ID is specified, the results displayed are with respect to the issuing VTAM host.

NETID

Specifies whether the COS table for a particular network or all networks is displayed. If omitted, NETID defaults to the network from which the command was entered.

Note: If a model network is defined by using COPIES= as part of the network definition, then *NETWORK is used as the network ID of the model network for the DISPLAY COS command.

NETID=netid
Displays the COS table for the named network.

NETID=*
Displays the COS table for all networks.

TYPE
Specifies whether the subarea or APPN COS table information is displayed.

TYPE=SUBAREA
Uses the ID and NETID operands to display the appropriate subarea COS table.

TYPE=APPN
Displays the APPN COS entries and the associated APPNCOS tables for this host.

Resulting display

The resulting display shows the requested networks paired with the applicable COS tables.

Examples

Displaying a Class of Service table for a specific PU:

```
d net,cos,id=istpus
IST097I DISPLAY ACCEPTED
IST350I DISPLAY TYPE = SUBAREA COS
IST354I PU T4/5 MAJOR NODE = ISTPUS
IST862I NETID = NETA COSTABLE = ISTSDCOS
IST314I END
```

Displaying the APPN Class of Service entries for this host:

```
d net,cos,type=appn
IST097I DISPLAY ACCEPTED
IST350I DISPLAY TYPE = APPN COS
IST1782I ENTRY NAME    TABLE NAME    ACTIVATION  TIME
IST1783I CPSVCMG       COSAPPN       12/21/00    08:30:49
IST1783I SNASVCMG      COSAPPN       12/21/00    08:30:49
IST1783I #CONNECT      COSAPPN       12/21/00    08:30:49
IST1783I #INTER        COSAPPN       12/21/00    08:30:49
IST1783I #INTERSC      COSAPPN       12/21/00    08:30:49
IST1783I #BATCH        COSAPPN       12/21/00    08:30:49
IST1783I #BATCHSC      COSAPPN       12/21/00    08:30:49
IST314I END
```

DISPLAY CPCP command

```
►►─DISPLAY NET,CPCP─┬─┬─,ID=*.*──────────────────┬─┬─,LIST=ALL──────────┬─►
                    │ │                          │ │                    │
                    │ │                     (1)  │ │              (2)   │
                    │ └─,ID=adjacent_cp_name─────┘ └─,LIST=─┬─NN─────┬───┘
                    │                                       └─EN─────┘
   ┌─,MAX=DSPLYDEF_start_option_value─┐   ┌─,SCOPE=ALL──────────┐
►──┤                                  ├───┤                     ├──────────►◄
   └─,MAX=─┬─*──────────────────────┬─┘   └─,SCOPE=─┬─ACT────┬─┘
           └─number_of_adjacent_CP──┘               ├─ALL────┤
                                                    ├─PENDING─┤
                                                    └─INACT───┘
```

Notes:

1 Depending on the value of the DSPLYWLD start option, wildcard values can be used for this operand.

2 Since an end node will never have CP-CP sessions with another end node, LIST=EN is not valid if this command is issued from an end node. In this case, the LIST operand is not necessary because the output for LIST=ALL and LIST=NN will be identical.

Abbreviations

Operand	Abbreviation
DISPLAY	D

Purpose

The DISPLAY CPCP command can be used to display the CP-CP session status for one or more adjacent nodes.

If the ID operand is omitted, the CP-CP session status for all adjacent nodes that are capable of having CP-CP sessions with the local node will be displayed.

If the adjacent CP name specified is not network-qualified, adjacent nodes with the CP name will be displayed.

If the adjacent CP name specified is a wildcard name, adjacent nodes with matching CP names will be displayed.

This command is valid only when it is issued from an APPN node.

Operands

ID Specifies the name of the adjacent node to display.

Depending on the value of the DSPLYWLD start option, wildcard values can be used for this operand. For more information about using wildcards, see “Using wildcard names” on page 11.

ID=cp_name
Specifies the name of an adjacent control point to display.

ID=*.*
Specifies that all adjacent nodes are to be displayed.

LIST
Specifies the type of adjacent nodes to be displayed.

LIST=ALL
Displays information about all adjacent nodes specified on the ID operand. If you omit the ID operand, information about all adjacent nodes is displayed.

LIST=NN
Displays information about the network nodes specified on the ID operand. If you omit the ID operand, information about all network nodes is displayed.

LIST=EN
Displays information about the end nodes specified on the ID operand, including migration data hosts (MDH). If you omit the ID operand, information about all end nodes is displayed.

SCOPE
Specifies the status of the CP-CP sessions to display.

DISPLAY=ACT
Displays only active CP-CP sessions.

DISPLAY=ALL
Displays all CP-CP sessions, whether active, pending, or inactive.

DISPLAY=INACT
Displays only inactive CP-CP sessions. The output shows adjacent nodes that have at least one active CP-CP session-capable connection but no CP-CP sessions with the local node.

DISPLAY=PENDING
Displays only pending CP-CP sessions.

MAX
Specifies the maximum number of CP-CP session pairs that VTAM displays for this command.

MAX=*
Specifies that the value of the DSPLYMAX start option is used to limit the display output.

MAX=number_of_cpcp_sessions
Specifies the number of CP-CP sessions that VTAM displays for this command. The valid range is 1 to the value of DSPLYMAX. The default is the value specified for the DSPLYDEF start option.

Specifying MAX limits the display output. VTAM searches only for the number of instances that you have specified. When that number is found, VTAM does not search any further. This saves processing time for the command and gives you control over the amount of display output generated by the command. If fewer sessions are found than you have specified on MAX, VTAM displays only the sessions that are found.

Resulting display

The resulting display shows the status of CP-CP sessions between the local node and adjacent nodes.

Examples

Displaying CP-CP session status for all adjacent nodes when no CP-CP sessions exit:

```
d net,cpcp
IST097I DISPLAY ACCEPTED
IST350I DISPLAY TYPE = CP-CP SESSION STATUS
IST1763I NO ACTIVE CP-CP SESSION-CAPABLE TGS EXIST
IST1454I 0 ADJCP(S) DISPLAYED
IST314I END
```

Displaying CP-CP session status for all adjacent nodes:

```
d net,cpcp
IST097I DISPLAY ACCEPTED
IST350I DISPLAY TYPE = CP-CP SESSION STATUS
IST1765I ADJACENT CP   WINNER   LOSER   STATE   NODE   ANDCB
IST1766I NETA.SSCPCA   ACT      ACT     UP      NN     004AA240
IST1766I NETA.SSCPAA   ACT      ACT     UP      EN     004AA128
IST1766I NETA.SSCP2A   ACT      ACT     UP      NN     004AA010
IST1454I 3 ADJCP(S) DISPLAYED
IST314I END
```

Displaying CP-CP status for all adjacent network nodes:

```
d net,cpcp,list=nn
IST097I DISPLAY ACCEPTED
IST350I DISPLAY TYPE = CP-CP SESSION STATUS
IST1765I ADJACENT CP    WINNER   LOSER   STATE   NODE   ANDCB
IST1766I NETA.SSCPCA    ACT      ACT     UP      NN     004AA240
IST1766I NETA.SSCP2A    PACT     INACT   UP      NN     004AA010
IST1454I 2 ADJCP(S) DISPLAYED
IST314I END
```

Displaying pending CP-CP session status for all adjacent network nodes:

```
d net,cpcp,list=nn,scope=pending
IST097I DISPLAY ACCEPTED
IST350I DISPLAY TYPE = CP-CP SESSION STATUS
IST1765I ADJACENT CP   WINNER   LOSER   STATE   NODE   ANDCB
IST1766I NETA.SSCP2A   PACT     INACT   UP      NN     004AA010
IST1454I 1 ADJCP(S) DISPLAYED
IST314I END
```

Displaying active CP-CP session status for all adjacent end nodes:

```
d net,cpcp,list=nn,scope=act
IST097I DISPLAY ACCEPTED
IST350I DISPLAY TYPE = CP-CP SESSION STATUS
IST1765I ADJACENT CP   WINNER   LOSER   STATE   NODE   ANDCB
IST1766I NETA.SSCPAA   ACT      ACT     UP      EN     004AA128
IST1766I NETA.SSCPBA   ACT      ACT     UP      EN     004AA028
IST1454I 2 ADJCP(S) DISPLAYED
IST314I END
```

DISPLAY CSM command

```
►►──DISPLAY NET,CSM──┬──────────────────────────┬──────────────────────────────►◄
                     └─,OWNERID=──┬─ALL─────┬──┘
                                  └─ownerid─┘
```

Abbreviations

Operand	Abbreviation
DISPLAY	D

Purpose

The DISPLAY CSM command allows you to monitor the use of storage managed by the communications storage manager (CSM). You can use this command to determine how much CSM storage is in use for ECSA and data space storage pools. This command also provides information about specific applications that are using CSM-managed storage pools. This command is routed to CSM so that VTAM does not have to be operational when you issue this command.

Operands

OWNERID
Specifies whether to display information about the amount of storage owned by all owners or a specific owner. The owner ID is the half-word address space identifier (ASID) of a CSM buffer owner. ASID values are in hexadecimal format and range from 1 – 7FFF. If OWNERID is not specified, this command displays the total storage allocated to the pool by storage pool source.

OWNERID=ALL
Produces a display by each owner ID showing the amount of storage owned in each storage pool and the cumulative total for each owner ID across all pools.

Note: The sum of the total of the storage allocated to all users of a particular pool may be greater than the total amount of storage allocated to that pool. This is due to the existence of multiple instances of a buffer created when an application program issues the IVTCSM ASSIGN_BUFFER macro. The storage displayed for each OWNERID indicates the amount of storage that must be freed by the user to enable the storage to be returned to the buffer pool.

OWNERID=ownerid
Specifies that the storage owned by the specified owner ID be displayed. The cumulative total across all pools is also displayed.

Resulting display

The resulting VTAM display shows:
- The overall storage use for each of the different sizes in the ECSA pools
- If OWNERID is specified, the amount of storage allocated to the owner
- If OWNERID is not specified, information about storage usage for each buffer pool
- The maximum current values for fixed and ECSA storage
- The highest level of fixed and ECSA storage obtained (highwater mark)

- The name(s) of the CSM data space(s)

Storage amounts are displayed in units of K (kilobytes) or M (megabytes).

Examples

Displaying information about storage managed and used by CSM for all owners:

```
d net,csm
IVT5508I DISPLAY ACCEPTED
IVT5529I PROCESSING DISPLAY CSM COMMAND - OWNERID NOT SPECIFIED
IVT5530I BUFFER BUFFER
IVT5531I SIZE   SOURCE                INUSE      FREE     TOTAL
IVT5532I -------------------------------------------------------
IVT5533I    4K  ECSA                     0M      256K      256K
IVT5533I   16K  ECSA                     0M        0M        0M
IVT5533I   32K  ECSA                     0M        0M        0M
IVT5533I   60K  ECSA                     0M        0M        0M
IVT5534I  180K  ECSA                  POOL DOES NOT EXIST
IVT5535I TOTAL  ECSA                     0M      256K      256K
IVT5532I -------------------------------------------------------
IVT5533I    4K  DATA SPACE 31            0M      256K      256K
IVT5533I   16K  DATA SPACE 31            0M        0M        0M
IVT5533I   32K  DATA SPACE 31            0M        0M        0M
IVT5533I   60K  DATA SPACE 31            0M        0M        0M
IVT5533I  180K  DATA SPACE 31            0M        0M        0M
IVT5535I TOTAL  DATA SPACE 31            0M      256K      256K
IVT5532I -------------------------------------------------------
IVT5533I    4K  DATA SPACE 64            0M      256K      256K
IVT5533I   16K  DATA SPACE 64            0M        0M        0M
IVT5533I   32K  DATA SPACE 64            0M        0M        0M
IVT5533I   60K  DATA SPACE 64            0M        0M        0M
IVT5534I  180K  DATA SPACE 64         POOL DOES NOT EXIST
IVT5535I TOTAL  DATA SPACE 64            0M      256K      256K
IVT5532I -------------------------------------------------------
IVT5535I TOTAL  DATA SPACE               0M      512K      512K
IVT5532I -------------------------------------------------------
IVT5536I TOTAL  ALL SOURCES              0M      768K      768K
IVT5538I FIXED MAXIMUM =      100M    FIXED CURRENT =      400K
IVT5541I FIXED MAXIMUM USED =      400K
IVT5539I ECSA  MAXIMUM =      100M    ECSA  CURRENT =      414K
IVT5541I ECSA  MAXIMUM USED =      414K
IVT5559I CSM DATA SPACE 1 NAME: CSM64001
IVT5559I CSM DATA SPACE 2 NAME: CSM31002
IVT5599I END
```

Displaying information about CSM storage allocated to a specific owner:

```
d net,csm,ownerid=01F6
IVT5508I DISPLAY ACCEPTED
IVT5549I PROCESSING DISPLAY CSM COMMAND - OWNERID SPECIFIED
IVT5530I BUFFER BUFFER
IVT5551I SIZE   SOURCE             STORAGE ALLOCATED TO OWNER
IVT5532I -------------------------------------------------------
IVT5553I    4K  ECSA                            256K
IVT5554I TOTAL  ECSA                            256K
IVT5532I -------------------------------------------------------
IVT5553I    4K  DATA SPACE 64                   128K
IVT5554I TOTAL  DATA SPACE 64                   128K
IVT5532I -------------------------------------------------------
IVT5554I TOTAL  DATA SPACE                      128K
IVT5532I -------------------------------------------------------
IVT5556I TOTAL  FOR OWNERID                     384K
IVT5557I OWNERID: ASID = 01F6  JOBNAME = VTAMAPPL
IVT5599I END
```

Displaying information about CSM storage allocated to all owners:

DISPLAY CSM

```
d net,csm,ownerid=all
IVT5508I DISPLAY ACCEPTED
IVT5549I PROCESSING DISPLAY CSM COMMAND - OWNERID SPECIFIED
IVT5530I BUFFER BUFFER
IVT5551I SIZE   SOURCE             STORAGE ALLOCATED TO OWNER
IVT5532I -----------------------------------------------------
IVT5553I    4K  ECSA                            256K
IVT5554I TOTAL  ECSA                            256K
IVT5532I -----------------------------------------------------
IVT5553I    4K  DATA SPACE 64                   128K
IVT5554I TOTAL  DATA SPACE 64                   128K
IVT5532I -----------------------------------------------------
IVT5554I TOTAL  DATA SPACE                      128K
IVT5532I -----------------------------------------------------
IVT5556I TOTAL  FOR OWNERID                     384K
IVT5557I OWNERID: ASID = 001A  JOBNAME = VTAMAPPL
IVT5532I -----------------------------------------------------
IVT5530I BUFFER BUFFER
IVT5551I SIZE   SOURCE             STORAGE ALLOCATED TO OWNER
IVT5532I -----------------------------------------------------
IVT5553I    4K  DATA SPACE 64                   128K
IVT5553I   16K  DATA SPACE 64                     1M
IVT5554I TOTAL  DATA SPACE 64                  1152K
IVT5532I -----------------------------------------------------
IVT5554I TOTAL  DATA SPACE                     1152K
IVT5532I -----------------------------------------------------
IVT5556I TOTAL  FOR OWNERID                    1152K
IVT5557I OWNERID: ASID = 001B  JOBNAME = VTAMAPPL
IVT5599I END
```

DISPLAY DIRECTRY command

Display information about a resource:

```
►►──DISPLAY NET,DIRECTRY──,ID=name──┬─,SCOPE=ONLY──────────┬──────────────────────►◄
                                    └─,SCOPE=──┬─ALL──────┬─┘
                                               ├─ONLY─────┤
                                               └─NSEARCH──┘
```

Display a resource name in any network:

```
►►──DISPLAY NET,DIRECTRY──,ID=*.name──┬─,MAX=DSPLYDEF_start_option_value─┬──────►
                                      └─,MAX=──┬─*──────────────────────┬─┘
                                               └─number_of_resources────┘

►──┬─,SCOPE=ONLY─┬──────────────────────────────────────────────────────────────►◄
   └─────────────┘
```

Abbreviations

Operand	Abbreviation
DISPLAY	D
SCOPE=ALL	EVERY or E
SCOPE=ONLY	NONE or N

When using an abbreviation in place of an operand, code the abbreviation exactly as shown in the table. For example, when coding the abbreviation for SCOPE=ALL, code only EVERY or E. Do not code SCOPE=E.

Purpose

The DISPLAY DIRECTRY (directory) command displays information from the directory database about a resource and the resources that it serves and owns. For example, you can display a network node along with the end nodes that it serves and the LUs that it owns. This command is valid only when it is issued at a network node or an interchange node.

Operands

ID=name

Specifies the name of a network node, end node, or LU in the directory database. The resource name can be network-qualified. If you do not specify the network identifier, VTAM uses the identifier of the host from which you are issuing the command.

You can specify an asterisk (*) or (*NETWORK) as the network ID portion of a network-qualified name. The * is useful for displaying a resource for which you do not know the network ID. The * is also useful for displaying several resources with the same name that are found in multiple networks, provided that you also specify the MAX operand on the command.

MAX

Specifies the maximum number of resources to display when the resource name on the ID operand is specified as being in any network. That is, the network ID portion of the network-qualified resource name is specified as asterisk (*) or (*NETWORK). For example, ID=*.a01n can be specified. MAX is valid only when an any network resource name is specified on the ID operand.

MAX=*

Specifies that the value of the DSPLYMAX start option is used to limit the display output.

MAX=number_of_resources

Specifies the maximum number of resources that VTAM displays for this command. The valid range is 1 to the value of DSPLYMAX. The default is the value specified for the DSPLYDEF start option.

The resource name might exist in more networks than the number you specify on the MAX operand. However, VTAM searches only for the number of instances that you have specified. When that number is found, VTAM does not search any further. This saves processing time for the command and gives you control over the amount of display output generated by the command. If fewer resources are found than you have specified on MAX, VTAM displays only the resources that are found.

SCOPE

Specifies the desired scope of the display.

SCOPE=ALL

Displays information for the resource specified on the ID operand and the resources it serves or owns, if any. If the specified resource is a network node, VTAM displays information about the network node, the end nodes it serves, and the LUs it owns. If the specified resource is an end node, VTAM displays information about the end node and the LUs it serves. If the specified resource is an LU, the display output is the same for SCOPE=ALL and SCOPE=ONLY.

SCOPE=ALL is not valid if you specify ID=*.name.

Attention: In a large network, displaying a network node or end node with SCOPE=ALL might generate an undesirably large display.

SCOPE=NSEARCH

Specifies that a network search is to be performed for the resource specified on the ID operand. The command returns all instances of the resource in the local domain and the first instance where the resource is found in other domains and subnetworks. The network search uses all possible search types (subarea, adjacent SSCP list, central directory server, broadcast, and cross-subnetwork) to find a resource that may go undetected by the search logic of individual session requests.

SCOPE=ONLY

Displays information only for the resource specified on the ID operand.

Resulting display

The resulting VTAM display shows:

- For SCOPE=ONLY, the entry type (registered, dynamic, or defined), the resource type (network node, end node, or LU), the name of the owning CP, and the name of the network node server.

Note: When the entry type is registered or dynamic, and the resource type is an LU, the display also includes the LU's subarea number (if applicable), the desired locate size, and the last locate size.

- For SCOPE=ALL, the same information as SCOPE=ONLY, and additionally, the name, entry type, and resource type of the served end nodes and owned LUs.
- For SCOPE=NSEARCH, the network-qualified name of the resource specified by the ID operand, the owning control point name, the network node server as it is known in the native subnetwork, and the found type.

If the resource type that is displayed is EN, the node might actually be a network node, end node, or SSCP. This is because in a mixed APPN and subarea network, CPs and SSCPs that are found in or through a subarea network are represented in this host (the host from which you are issuing this command) as end nodes that are served by the interchange node through which the resource was found.

The DISPLAY DIRECTRY command might show a resource name appearing in several networks even though the resource actually exists in only one network. This can happen if intermediate SSCPs are pre-V4R1 and they pass only the 8-character resource name. The real network ID is therefore lost and other network IDs might be subsequently assumed.

Examples

Displaying an end node with SCOPE=ALL:

```
d net,directry,id=neta.sscp1a,scope=all
IST097I DISPLAY ACCEPTED
IST350I DISPLAY TYPE = DIRECTORY
IST1186I DIRECTORY ENTRY = REGISTERED EN
IST1184I CPNAME = NETA.SSCP1A NETSRVR = NETD.SSCP2A
IST1185I NAME = NETB.ECHOB91  - DIRECTORY ENTRY = REGISTERED LU
IST1185I NAME = NETB.ECHOB92  - DIRECTORY ENTRY = REGISTERED LU
IST1185I NAME = NETA.NMVTAPPL - DIRECTORY ENTRY = REGISTERED LU
IST1185I NAME = NETA.APPL2V   - DIRECTORY ENTRY = REGISTERED LU
IST1185I NAME = NETA.APPL1V   - DIRECTORY ENTRY = REGISTERED LU
IST1185I NAME = NETA.TSO1     - DIRECTORY ENTRY = REGISTERED LU
IST314I END
```

Displaying an end node with SCOPE=ONLY:

```
d net,directry,id=neta.sscp1a,scope=only
IST097I DISPLAY ACCEPTED
IST350I DISPLAY TYPE = DIRECTORY
IST1186I DIRECTORY ENTRY = REGISTERED EN
IST1184I CPNAME = NETA.SSCP1A NETSRVR = NETD.SSCP2A
IST314I END
```

Displaying an LU:

```
d net,directry,id=appcaa01
IST097I DISPLAY ACCEPTED
IST350I DISPLAY TYPE = DIRECTORY
IST1186I DIRECTORY ENTRY = REGISTERED LU
IST1184I CPNAME = NETA.SSCPAA - NETSRVR = NETA.SSCP1A
IST484I SUBAREA = 1
IST1703I DESIRED LOCATE SIZE = 1K, LAST LOCATE SIZE = 1K
IST314I END
```

Displaying the results of a network search:

```
d net,directry,id=lu1,scope=ns
IST350I DISPLAY TYPE = NETWORK SEARCH
IST1427I NAME = NETA.LU1           FOUND TYPE = OWNER
IST1184I CPNAME = NETA.NN3 - NETSRVR = ***NA***
```

DISPLAY DIRECTRY

```
IST924I -------------------------------------------------------------
IST1427I NAME = NETA.LU1           FOUND TYPE = SURROGATE
IST1184I CPNAME = NETA.NN1 - NETSRVR = ***NA***
IST924I -------------------------------------------------------------
IST1427I NAME = NETA.LU1           FOUND TYPE = WILDCARD
IST1184I CPNAME = NETA.NN2 - NETSRVR = ***NA***
IST314I END
```

DISPLAY DISK command

```
►►──DISPLAY NET,DISK──,ID=ncp_name──────────────────────────────────────►◄
```

Abbreviations

Operand	Abbreviation
DISPLAY	D

Purpose

The DISPLAY DISK command provides information about an IBM 3720 or 3745 Communication Controller's disk contents.

The DISPLAY DISK command displays the following information about the contents of IBM 3720 and 3745 Communication Controller external disk storage:

- Information about each load module, including:
  - Load module name
  - Date and time the load module was stored on disk
  - Stability of the load module (stored, storing, or suspended)
  - Indication of whether a load module on disk is the same as the load module currently active in the communication controller
  - Module name, requested IPL time, and estimated IPL time (if IPL was specified)
- Information regarding dumps, including:
  - Dump name
  - Date and time the dump was stored on disk

  Note: Dump information is not displayed until the complete dump has been stored on the hard disk. If you do not receive dump information, retry the command at a later time.
- An indication of whether the load module is coded to receive automatic IPL

  This is determined by the value of Auto Dump/Load, which controls automatic dumping and reloading of an NCP to or from the hard disk in the event of an NCP abend. See the DUMPLOAD operand on the VARY ACT command on page 464 for more information.

Operands

ID=ncp_name

Identifies the name of the NCP currently active in the IBM 3720 or 3745 Communication Controller. The contents of that communication controller's external disk storage are displayed.

Note: Although the IBM 3745-410 Communication Controller disk can contain up to four load modules and two dumps, the maximum per CCU is two load modules and one dump. DISPLAY DISK displays only the 3745 storage relative to the NCP specified in the ID operand.

Resulting display

The resulting display provides load module and dump information. Load module and dump source are not provided. To view dump source, use the DISPLAY NCPSTOR command, shown in the “DISPLAY NCPSTOR command” on page 151.

Examples

Displaying a disk containing a load module:

```
d net,disk,id=a0362zc
IST097I DISPLAY ACCEPTED
IST951I DISPLAY DISK INFORMATION FOR A0362ZC
IST954I LOAD MODULE   DATE      TIME   STORE STATUS
IST955I   A04AT      02/06/92  15:11:54   STORED
IST965I AUTO DUMP/LOAD: NO
IST314I END
```

Displaying a disk containing a dump and two load modules:

```
d net,disk,id=a0362zc
IST097I DISPLAY ACCEPTED
IST951I DISPLAY DISK INFORMATION FOR A0362ZC
IST952I DUMP NAME     DATE      TIME
IST953I  A0362ZC    09/25/92  10:30:52
IST924I ------------------------------------------------------------
IST954I LOAD MODULE   DATE      TIME   STORE STATUS  ACTIVE
IST955I   A04AT      02/06/92  15:11:54   STORED        NO
IST955I   A0362ZC    09/25/92  10:23:43   STORED        YES
IST965I AUTO DUMP/LOAD: YES
IST314I END
```

DISPLAY DLURS command

```
►►──DISPLAY NET,DLURS──────────────────────────────────────────────────►◄
```

Abbreviations

Operand	Abbreviation
DISPLAY	D
DLURS	DLUR

Purpose

The DISPLAY DLURS (dependent LU requesters) command displays all DLURs for which this host acts as dependent LU server (DLUS). Only DLURs that have a CPSVRMGR session with the host are displayed. The host (the DLUS) always sends data on a contention-winner session and receives data on a contention-loser session. Likewise, the DLUR sends data on a contention-winner session and receives data on a contention-loser session.

This command is valid only when it is issued at a network node or an interchange node.

Resulting display

The resulting display shows:

- The name of each DLUR.
- The status of each end of the CPSVRMGR session. Pending active and pending inactive states should be temporary. If the session remains in pending active or pending inactive state, it might be hung.

Examples

Displaying dependent LU requesters:

```
d net,dlurs
IST097I DISPLAY ACCEPTED
IST350I DISPLAY TYPE = DLURS
IST1352I DLUR NAME          DLUS CONWINNER STATE  DLUS CONLOSER STATE
IST1353I NETA.NNCPA1        ACTIVE                ACTIVE
IST314I END
```

DISPLAY EXIT command

```
►►─DISPLAY NET,EXIT─┬─,ID=*──────────────┬──────────────────────────────►
                    └─,ID=──┬─*──────────┘
                            └─exit_name──┘

►─┬─,MAX=DSPLYDEF_start_option_value─┬──────────────────────────────►◄
  └─,MAX=──┬─*──────────────────────┘
           └─number_of_resources────┘
```

Abbreviations

Operand	Abbreviation
DISPLAY	D

Purpose

The DISPLAY EXIT command displays the name, exit level, module name, and status of installation-wide exit routines.

Operands

ID Specifies which installation-wide exit routine to display.

ID=exit_name
Specifies one of the following installation-wide exit routines:

ISTCMMND
Command verification exit routine

ISTEXCAA
Session management exit routine

ISTEXCCS
Configuration services XID exit routine

ISTEXCDM
Directory services management exit routine

ISTEXCGR
Generic resource resolution exit routine

ISTEXCPM
Performance monitor exit routine

ISTEXCSD
Selection of definitions for dependent logical units (SDDLU) exit routine

ISTEXCUV
USERVAR exit routine

ISTEXCVR
Virtual route selection exit routine

ID=*
Specifies all installation-wide exit routines.

MAX
Specifies the maximum number of installation-wide exit routines that VTAM displays for this command.

MAX=*
Specifies that the value of the DSPLYMAX start option is used to limit the display output.

MAX=number_of_resources
Specifies the number of installation-wide exit routines to display for this command. The valid range is 1 to the value of DSPLYMAX. The default is the value specified for the DSPLYDEF start option.

Specifying MAX limits the display output. VTAM searches only for the number of instances that you have specified. When that number is found, VTAM does not search any further. This saves processing time for the command and gives you control over the amount of display output generated by the command. If fewer installation-wide exit routines are found than you have specified on MAX, VTAM displays only the installation-wide exit routines that are found.

Resulting display

The resulting display shows the exit routine name, the exit level, the module name for the exit, and the status of the exit at the time the command was issued.

If ISTEXCAA is specified on the ID operand and the exit is active, the resulting display also shows the active functions of the session management exit routine.

Note: For ISTEXCPM, the base exit instance is always displayed regardless of its status, and is displayed before any multiple exit. Multiple exit instances are not displayed if they are inactive.

See the *z/OS Communications Server: SNA Customization* for information about the exit level.

Examples

Displaying all installation-wide exit routines:

```
d net,exit
IST097I DISPLAY ACCEPTED
IST350I DISPLAY TYPE = EXIT
IST1250I NAME     LEVEL    MODULE      STATUS
IST1251I ISTCMMND ***NA***             INACTIVE
IST1251I ISTEXCUV ***NA*** ISTEXCUV    ACTIVE
IST1251I ISTEXCCS ***NA*** ISTEXCCS    ACTIVE
IST1251I ISTEXCSD ***NA*** ISTEXCSD    ACTIVE
IST1251I ISTEXCAA ***NA***             INACTIVE
IST1251I ISTEXCVR ***NA***             INACTIVE
IST1251I ISTEXCPM ***NA***             INACTIVE
IST1251I ISTEXCDM ***NA***             INACTIVE
IST1251I ISTEXCGR ***NA*** ISTEXCGR    ACTIVE
IST1454I 9 EXIT(S) DISPLAYED
IST314I END
```

Displaying the ISTEXCPM installation-wide exit routine:

```
d net,exit,id=istexcpm
IST097I DISPLAY ACCEPTED
IST350I DISPLAY TYPE = EXIT
IST1250I NAME     LEVEL    MODULE      STATUS
IST1251I ISTEXCPM ***NA***             INACTIVE
```

```
IST1251I ISTEXCPM ***NA*** P1          ACTIVE
IST1251I ISTEXCPM ***NA*** P2          ACTIVE
IST1251I ISTEXCPM ***NA*** P3          ACTIVE
IST1454I 4 EXIT(S) DISPLAYED
IST314I END
```

Displaying the ISTEXCAA installation-wide exit routine:

```
d net,exit,id=istexcaa
IST097I DISPLAY ACCEPTED
IST350I DISPLAY TYPE = EXIT
IST1250I NAME     LEVEL    MODULE      STATUS
IST1251I ISTEXCAA ***NA*** ISTEXCAA    ACTIVE
IST199I OPTIONS = BEGIN INITAUTH SECAUTH ACCTING GWPATH END XRF
IST199I OPTIONS = ADJSSCP ADJ_DSRL INITA_IO ALIAS ALS ALS_DSRL
IST199I OPTIONS = ALS_CDRS MNPS HPRVRSEL HPRP_OLU HPRP_ANR HPRP_DLU
IST1454I 1 EXIT(S) DISPLAYED
IST314I END
```

DISPLAY GRAFFIN command

```
►►─DISPLAY NET,GRAFFIN─┬─,LU=*.*──────┬─┬─,GNAME=*.*──────┬─────────────────────►
                       └─,LU=name─────┘ └─,GNAME=name─────┘

►─┬─,MAX=DSPLYDEF_start_option_value─┬──────────────────────────────────────►◄
  └─,MAX=max_affinities──────────────┘
```

Purpose

The DISPLAY GRAFFIN command displays affinity information for generic resources. Since affinities for TSO generic resources exist only temporarily during TSO logon processing, DISPLAY GRAFFIN does not display affinities for sessions with these types of resources.

Operands

LU

Specifies the name of the partner LU. The name can be a network-qualified name.

Notes:

1. Depending on the value of the DSPLYWLD start option, wildcard values can be used for this operand. For more information about using wildcards, see “Using wildcard names” on page 11.
2. Specifying a wildcard name might degrade performance because VTAM checks every application major node in the network.

GNAME

Specifies the generic resource name. The name can be a network-qualified name.

Notes:

1. Depending on the value of the DSPLYWLD start option, wildcard values can be used for this operand. For more information about using wildcards, see “Using wildcard names” on page 11.
2. Specifying a wildcard name might degrade performance because VTAM checks every application major node in the network.

MAX

Specifies the maximum number of affinities that VTAM displays for this command.

MAX=*

Specifies that the value of the DSPLYMAX start option is used to limit the display output.

MAX=max_affinities

Specifies the number of affinities to display for this command. The valid range is 1–value of DSPLYMAX. The default is the value specified for the DSPLYDEF start option.

Specifying MAX limits the display output. VTAM searches only for the number of instances that you have specified. When that number is found, VTAM does not search any further. This saves processing time for the command and gives you control over the amount of display output

generated by the command. If fewer affinities are found than you have specified on MAX, VTAM displays only the affinities that are found.

Resulting display

The resulting display shows the affinity values.

Examples

Displaying the affinity values:

```
d net,graffin,lu=netx.*
IST097I DISPLAY ACCEPTED
IST350I DISPLAY TYPE = GENERIC AFFINITY
IST1706I PARTNER NAME       GENERIC RESOURCE    MEMBER     ATTRIBUTES
IST1707I NETX.LUA10027      NETA.GRCICS         CICS1      -VG--V--
IST1707I NETX.LUAPPC55      NETA.MVSAPPC        MVSAPPC1   -VG-MX--
IST1707I NETX.LUAPPC55      NETA.MVSAPPC        MVSAPPC2   -VA-MX--
IST1707I NETX.LUA13039      NETA.GRIMS          IMS01      PAG6-V--
IST1454I 4 AFFINITIES DISPLAYED FOR LU=netx.*
IST314I END
```

Note: LUAPPC55 has one SPTE with two session pairs.

DISPLAY GROUPS command

```
►►──DISPLAY NET,GROUPS──┬──────────────────────────────────────────────────►
                        │                        (1)
                        └─,ID=──┬─name──────────┬─
                                └─(─name─)──────┘

   ┌─,MAX=DSPLYDEF_start_option_value─┐   ┌─,SCOPE=ALL──────────────┐
►──┤                                  ├───┤                         ├──────►◄
   └─,MAX=──┬─*──────────────────────┬─┘   └─,SCOPE=──┬─ALL──────────┬─┘
            └─number_of_resources────┘                 │              │
                                                       ├─ACT──────────┤
                                                       ├─ACTONLY──────┤
                                                       ├─ALL──────────┤
                                                       ├─INACT────────┤
                                                       ├─INACTONLY────┤
                                                       ├─PENDING──────┤
                                                       └─RESET────────┘
```

Notes:

1 Depending on the value of the DSPLYWLD start option, wildcard values can be used for this operand.

Abbreviations

Operand	Abbreviation
DISPLAY	D
SCOPE=ACT	ACT or A
SCOPE=ACTONLY	ACTONLY
SCOPE=ALL	EVERY or E
SCOPE=INACT	INACT or I
SCOPE=INACTONLY	INACTONL
SCOPE=PENDING	PEND
SCOPE=RESET	RESET

When using an abbreviation in place of an operand, code the abbreviation exactly as shown in the table. For example, when coding the abbreviation for SCOPE=ALL, code only EVERY or E. Do not code SCOPE=E.

Purpose

The DISPLAY GROUPS command provides information about line groups.

Note: To display line groups independently of the major nodes that contain them, use the DISPLAY RSCLIST command with IDTYPE=GROUPS.

Operands

ID=name
Specifies the name of one or more active NCP, channel-attachment, or XCA major nodes whose subordinate line groups are to be displayed.

Depending on the value of the DSPLYWLD start option, wildcard values can be used for this operand. For more information about using wildcards, see “Using wildcard names” on page 11.

Attention: Specifying a wildcard name might degrade performance because VTAM checks every NCP, channel-attachment, and XCA major node in the network.

MAX
Specifies the maximum number of line groups that VTAM displays for this command.

MAX=*
Specifies that the value of the DSPLYMAX start option is used to limit the display output.

MAX=number_of_resources
Specifies the number of line groups that VTAM displays for this command. The valid range is 1–value of DSPLYMAX. The default is the value specified for the DSPLYDEF start option.

Specifying MAX limits the display output. VTAM searches only for the number of instances that you have specified. When that number is found, VTAM does not search any further. This saves processing time for the command and gives you control over the amount of display output generated by the command. If fewer line groups are found than you have specified on MAX, VTAM displays only the line groups that are found.

SCOPE
Specifies the desired scope of the display.

Note: If you specify the SCOPE operand without specifying a value SCOPE=ALL is assumed.

SCOPE=ACT
Specifies that information is to be displayed about all active, pending, and connectable line groups within the specified major nodes (or within all NCP, channel-attachment, and XCA major nodes if the ID operand is omitted). If this display is undesirably large, you can use SCOPE=ACTONLY to further limit the display.

SCOPE=ACTONLY
Specifies that information is to be displayed about all line groups in an active state within the specified major nodes (or within all NCP, channel-attachment, and XCA major nodes if the ID operand is omitted). The display does **not** include line groups in pending or connectable states. If no line groups are found in an active state, you can use SCOPE=ACT to broaden the scope of the display to include those in active, connectable, and pending states.

SCOPE=ALL
Specifies that information is to be displayed about all line groups (regardless of status) within the specified major nodes (or within all NCP, channel-attachment, and XCA major nodes if the ID operand is omitted).

SCOPE=INACT
Specifies that information is to be displayed about all inactive line groups within the specified major nodes (or within all NCP, channel-attachment, and XCA major nodes if the ID operand is omitted). If this display is undesirably large, you can use SCOPE=INACTONLY or SCOPE=RESET to further limit the display.

SCOPE=INACTONLY
Specifies that information is to be displayed about all inactive line groups within the specified major nodes (or within all major nodes if the ID operand is omitted). Resources in a RESET state are not included in the SCOPE=INACTONLY display.

SCOPE=PENDING
Specifies that information is to be displayed about all pending line groups within the specified major nodes (or within all NCP, channel-attachment, and XCA major nodes if the ID operand is omitted). A pending state is a transient state to or from the fully active state.

SCOPE=RESET
Specifies that information is to be displayed about all line groups in a RESET state within the specified major nodes (or within all NCP, channel-attachment, and XCA major nodes if the ID operand is omitted).

Resulting display

The resulting display lists the group's major node with its type and status, and the name, type, and status of each line group subordinate to the major node.

Examples

Displaying all line groups:

```
d net,groups
IST097I DISPLAY ACCEPTED
IST350I DISPLAY TYPE = GROUPS
IST089I ISTPUS   TYPE = PU T4/5          , ACTIV
IST089I ISTGROUP TYPE = LINE GROUP       , ACTIV
IST089I A0462ZC  TYPE = PU T4/5          , ACTIV
IST089I A04LBNNB TYPE = LINE GROUP       , ACTIV
IST089I A04XNPAX TYPE = LINE GROUP       , ACTIV
IST089I A04DBNNS TYPE = LINE GROUP       , ACTIV
IST089I A04LBNNS TYPE = LINE GROUP       , ACTIV
IST089I A04GPRI  TYPE = LINE GROUP       , ACTIV
IST089I A04GSEC  TYPE = LINE GROUP       , ACTIV
IST089I A04LINNS TYPE = LINE GROUP       , ACTIV
IST089I A04BPGRP TYPE = LINE GROUP       , ACTIV
IST089I A04BLG1  TYPE = LINE GROUP       , ACTIV
IST089I A04BLG2  TYPE = LINE GROUP       , ACTIV
IST089I A04XCA0  TYPE = LINE GROUP       , ACTIV
IST089I C2362ZC  TYPE = PU T4/5          , ACTIV
IST172I NO GROUPS EXIST
IST314I END
```

Displaying line groups within a specific major node:

```
d net,groups,id=a0362zc
IST097I DISPLAY  ACCEPTED
IST350I DISPLAY TYPE = GROUPS
IST089I A0362ZC  TYPE = PU T4/5          , ACTIV
IST089I A03LBNNB TYPE = LINE GROUP       , ACTIV
IST089I A03XNPAX TYPE = LINE GROUP       , ACTIV
IST089I A03L56KP TYPE = LINE GROUP       , ACTIV
IST089I A03LBNNS TYPE = LINE GROUP       , ACTIV
IST089I A03FID2  TYPE = LINE GROUP       , ACTIV
IST089I A03BPGRP TYPE = LINE GROUP       , ACTIV
IST089I A03BLG1  TYPE = LINE GROUP       , ACTIV
IST089I A03BLG2  TYPE = LINE GROUP       , ACTIV
IST089I A03XCA0  TYPE = LINE GROUP       , ACTIV
IST314I END
```

Displaying line groups, limiting output to three resources:

DISPLAY GROUPS

```
d net,groups,max=3
IST097I DISPLAY ACCEPTED
IST350I DISPLAY TYPE = GROUPS
IST089I ISTPUS   TYPE = PU T4/5          , ACTIV
IST089I ISTGROUP TYPE = LINE GROUP       , ACTIV
IST089I NCP3AA1  TYPE = PU T4/5          , PCTD1
IST089I GRP3A1   TYPE = LINE GROUP       , NEVAC
IST089I GRP3A6   TYPE = LINE GROUP       , NEVAC
IST1315I DISPLAY TRUNCATED AT MAX = 3
IST1454I 3 RESOURCE(S) DISPLAYED
IST314I END
```

DISPLAY ID command

Display a resource:

```
►►──DISPLAY NET,ID=name──┬─,HPRDIAG=NO──┬──┬─,IDTYPE=RESOURCE──────┬──►
                         └─,HPRDIAG=YES─┘  └─,IDTYPE=─┬─CDRM──────┬─┘
                                                      ├─CP────────┤
                                                      ├─DIRECTRY──┤
                                                      ├─GENERIC───┤
                                                      ├─LUALIAS───┤
                                                      ├─RESOURCE──┤
                                                      ├─SHADOW────┤
                                                      ├─SSCP──────┤
                                                      ├─USERVAR───┤
                                                      └─XCFCP─────┘

►──┬──────────────┬──┬─,SCOPE=ONLY──────────────┬──────────────────►◄
   └─,NETID=netid─┘  └─,SCOPE=─┬─ALL─────────┬─┘
                               ├─ACT─────────┤
                               ├─ACTONLY─────┤
                               ├─ACTSESS─────┤
                               ├─ALL─────────┤
                               ├─CONCT───────┤
                               ├─INACT───────┤
                               ├─INACTONLY───┤
                               ├─ONLY────────┤
                               ├─PENDING─────┤
                               ├─RELSD───────┤
                               └─RESET───────┘
```

Display a resource name in any network:

```
►►──DISPLAY NET,ID=*.name──┬─,IDTYPE=RESOURCE──────┬──►
                           └─,IDTYPE=─┬─DIRECTRY─┬─┘
                                      └─RESOURCE─┘

►──┬─,MAX=1──────────────────┬──┬─,SCOPE=ONLY──────────────┬──────────►◄
   └─,MAX=number_of_resources┘  └─,SCOPE=─┬─ALL─────────┬─┘
                                          ├─ACT─────────┤
                                          ├─ACTONLY─────┤
                                          ├─ACTSESS─────┤
                                          ├─ALL─────────┤
                                          ├─CONCT───────┤
                                          ├─INACT───────┤
                                          ├─INACTONLY───┤
                                          ├─ONLY────────┤
                                          ├─PENDING─────┤
                                          ├─RELSD───────┤
                                          └─RESET───────┘
```

Display a resource name using an IP address:

```
►►──DISPLAY NET,ID=ipaddress,IDTYPE=IPADDR──────────────────────────────►◄
```

Abbreviations

Operand	Abbreviation
DISPLAY	D
HPRDIAG=YES	HPRDIAG=Y
SCOPE=ACT	ACT or A
SCOPE=ACTONLY	ACTONLY
SCOPE=ACTSESS	ACTSESS
SCOPE=ALL	EVERY or E
SCOPE=CONCT	CONCT
SCOPE=INACT	INACT or I
SCOPE=INACTONLY	INACTONL
SCOPE=ONLY	NONE or N
SCOPE=PENDING	PEND
SCOPE=RELSD	RELSD
SCOPE=RESET	RESET

When using an abbreviation in place of an operand, code the abbreviation exactly as shown in the table. For example, when coding the abbreviation for SCOPE=ALL, code only EVERY or E. Do not code SCOPE=E.

Purpose

The DISPLAY ID command provides information about a particular major node, minor node, or directory entry. Additional information can be displayed about the node's subordinate resources.

Note: This command applies only to active major nodes and minor nodes within active major nodes.

Inactive subarea nodes (for example, NCP major nodes) that have been contacted by VTAM as a result of the activation of a cross-subarea link station can be displayed, if the name of the given subarea node is known to VTAM. Both the NCP being displayed and the NCP containing the link station must be an NCP V1R3 or later release level. In all other cases, inactive major nodes and their minor nodes are not known to VTAM and are therefore not displayed.

When the operator specifies:

- A switched line, the display indicates whether the line is dial-in, dial-out, or both dial-in and dial-out. For a dial-in line, the answer mode is indicated.
- An application program minor node or LU name, the associated USS, interpret, and logon-mode table names and the default logon-mode entry are displayed.

  Note: Specifying ISTNOP, the name of the application program that represents the network operator, also displays the names of the message-flooding prevention table and the session awareness (SAW) data filter table.

- An NCP or host physical unit name, the following are displayed:
  - The name and status of the associated dynamic path update members
  - The load module name of the NCP that was loaded (if different from the NCP PU name)
  - An indication of whether a nondisruptive load (MODIFY LOAD) is currently in progress
  - An indication of whether an NCP, MOSS, or CSP dump transfer (MODIFY DUMP) is currently in progress.
- The name of a FRSESET definition statement, a FRSESET display is issued. The display includes a message that shows how the FRSESET was defined, statically or dynamically. (Statically means that it was included in the NCP generation.)
- An application program minor node, the compression-level values are displayed.
- An application program, LU, or cross-domain resource name, the security data for data encryption and message authentication are displayed.

Operands

HPRDIAG=YES
Specifies that additional HPR diagnostic information is to be displayed for the Rapid Transport Protocol (RTP) physical unit.

The resource identified by the ID operand must be an RTP physical unit in this host.

HPRDIAG=NO
Specifies that additional HPR diagnostic information is not to be displayed for the Rapid Transport Protocol (RTP) physical unit. If specified, the resource identified by the ID operand must be an RTP physical unit in this host.

ID=name
Specifies the name of a major node, minor node, USERVAR, generic resource name, LUALIAS, or resource in the directory database.

The name can be a network-qualified name. Regardless of whether you specify a network-qualified name on the ID operand, the resource name in the display output is network-qualified only for application programs, SSCPs, CDRSCs, and LUs. The resource name in the display output is not network-qualified for any other type of resource.

To display information about a dynamic XCF local SNA PU representing the connection to another VTAM, you can specify one of the following:
- The name of the PU
- The CP name of the other VTAM with IDTYPE=XCFCP

Notes:

1. If the name is an NCP major node, the name used must be the name specified on the ID operand when the NCP was activated. If PUNAME was specified on the BUILD definition statement, then *name* is the PUNAME.
2. If the name is an application program in this domain, the ID operand can specify either the application program minor node name or the name under which the application program opened its ACB.
3. For an application program minor node, you can specify the name of a conventionally defined application program, a model application program, or a dynamic application program built from a model application program definition.

You can use wildcard characters in the name you specify. The use of wildcard characters on the ID operand of the DISPLAY ID command does not depend on the value of the DSPLYWLD start option. Unlike wildcard characters in other commands, the wildcard characters you specify on the ID operand of the DISPLAY ID command do not represent unspecified characters. They are interpreted as the actual characters, * and ?.

Therefore, if you specify DISPLAY ID=APPL*, VTAM will display information about the model application program definition named APPL*, but it will not display information about any other application programs whose names begin with APPL, followed by zero to four valid characters in length. It will also not display information about any dynamic application programs built from the model application program definition named APPL*.

In other words, using wildcard characters in the name you specify on the ID operand of the DISPLAY ID command will result in the display of at most one model application program. If you want to display information about all application programs whose names match a pattern established by the placement of wildcard characters, use the DISPLAY RSCLIST command.

4. For a CDRM, you can specify a network-qualified name, but this does not remove the restriction that the non-network-qualified CDRM name must be unique across networks.
5. If the name is a non-network-qualified CDRSC, VTAM will use the network ID of the host from which the command is issued. If two or more CDRSCs exist with the same resource name, but different network identifiers, and DISPLAY ID=*non-network-qualified_name* is issued, then one of the following occurs:
   - Only one CDRSC is displayed. The displayed CDRSC is one of the following:
     - The one that has been defined with VTAM's network identifier
     - The one that has been defined as cross-network, but specified with NQNMODE=NAME, either on its CDRSC definition or by the NQNMODE start option
   - None of the CDRSCs will be displayed if they are all specified with NQNMODE=NQNAME, either on their CDRSC definitions or by the NQNMODE start option.
6. If you specify a non-network-qualified USERVAR name, VTAM uses the network ID of the host from which you issue the command.
7. You can specify * (or *NETWORK) as the network ID portion of a network-qualified name. The * is useful for displaying a resource for which you do not know the network ID. The * is also useful for displaying several resources with the same name that are found in multiple networks, provided that you also specify the MAX operand on the command.
8. If the name is a generic resource name, the output will list all the members known by that generic resource name.
9. If the name is a TN3270 client IP address in dotted decimal form (for example, ID=192.5.48.122) and there is an associated z/OS CS Telnet server APPL, CDRSC, or LU minor node resource name, it is displayed.

IDTYPE

Specifies the type of resource that the ID operand names. If several types of resources share the same name, IDTYPE can be used to identify which resource the command should act on. IDTYPE differs from MAX in that IDTYPE displays several representations of the same resource, whereas MAX displays several different resources with the same name.

IDTYPE=CDRM
Displays information only about the SSCP (represented as a CDRM).

IDTYPE=CP
Displays information only about the host CP (represented as an application) or an adjacent CP (represented as a CDRSC).

IDTYPE=DIRECTRY
Displays information from the directory database for the specified resource. The DISPLAY ID command with IDTYPE=DIRECTRY is valid only when it is issued at a network node or an interchange node.

IDTYPE=GENERIC
Displays the names of application program network names that are also generic resources.

IDTYPE=IPADDR
Displays the IP address of the currently connected TN3270 client applications and LUs. The IP address accepts a fully-qualified dotted decimal format.

Note: The **ID** keyword and **IDTYPE=IPADDR** are both required.

IDTYPE=LUALIAS
Displays information only about the CDRSC whose name is associated with the LUALIAS. If a network-qualified name is specified, VTAM does not search for an LUALIAS with that resource name. For more information on CDRSCs that are defined with an LUALIAS, see the *z/OS Communications Server: SNA Resource Definition Reference*.

IDTYPE=RESOURCE
Displays information about the resource named on the ID operand. VTAM searches for the resource in the following order:

1. VTAM searches for an SSCP (CDRM), a host CP (application), or an adjacent CP (CDRSC) by the name specified on the ID operand and displays information for any or all of these resources it finds. If the resource is found and it is not the host CP, and you are issuing this command at a network node or interchange node, the display includes information from the directory database.
2. If VTAM does not find an SSCP, a host CP, or an adjacent CP, it searches for a resource with the name specified on the ID operand and displays information for the resource, if it finds it. If the resource is a CDRSC, and you are issuing this command at a network node or interchange node, the display includes information from the directory database.
3. If VTAM does not find a resource by that name, it searches for a USERVAR with the name specified on the ID operand and displays information for the resource, if it finds it.
4. If VTAM does not find a USERVAR by that name, or a USERVAR is found but the resource defined as the value of the USERVAR is not found, it searches for an LUALIAS with the name specified on the ID operand and displays information for the CDRSC, if it finds it.
5. If no resource is found with the name specified on the ID operand, and you are issuing this command at a network node or interchange node, VTAM displays information about the resource from the directory database, if it finds it.

6. If no resource is found and no entry exists in the directory database with the specified name, the command fails.

IDTYPE=SHADOW
Displays information only about a shadow resource, if it exists. Included in the information displayed is the real resource that caused the displayed resource to become a shadow resource.

For more information on shadow resources, see the *z/OS Communications Server: SNA Network Implementation Guide*

IDTYPE=SSCP
Displays information only about the SSCP (represented as a CDRM).

IDTYPE=USERVAR
Displays information only about the resource whose name is associated with the USERVAR.

IDTYPE=XCFCP
Displays information only about the dynamic XCF local SNA PU representing the connection to another VTAM in the XCF group, when the ID operand specifies the CP name of the other VTAM.

MAX=number_of_resources
Specifies the maximum number of resources to display when the resource name on the ID operand is specified as being in “any network”. That is, the network ID portion of the network-qualified resource name is specified as * (or *NETWORK). For example, ID=*.a01n can be specified. MAX is valid only when the following conditions are both true:

1. An “any network” resource name is specified on the ID operand
2. IDTYPE=RESOURCE or IDTYPE=DIRECTRY is used

The value for MAX can be any integer from 1 to 200. The default is 1.

The resource name might exist in more networks than the number you specify on the MAX operand. However, VTAM searches only for the number of instances that you have specified. When that number is found, VTAM does not search any further. This saves processing time for the command and gives you control over the amount of display output generated by the command. If fewer resources are found than you have specified on MAX, VTAM displays only the resources that are found.

The display might show the same resource more than once if both subarea information and APPN directory information are available for a particular resource. The value specified for MAX does not take into consideration this duplication of information for a particular resource, so you could specify a value such as MAX=3 and receive a display of up to six resources.

NETID=netid
Valid only for CDRSC major nodes and limits the scope of the display to CDRSCs within the indicated network and CDRSCs defined without a network identifier (not associated with any particular network). If you specify the NETID operand, but do not identify a specific network (that is, a value for *netid* is not entered), all CDRSCs in the major node are displayed. CDRSCs are displayed in the order in which they were defined or added within the major node.

To display minor nodes and independent LUs, specify a network-qualified name on the ID operand, and do not use the NETID operand.

SCOPE

Specifies the desired scope of the display.

Note: If you specify the SCOPE operand without specifying a value SCOPE=ALL is assumed.

The SCOPE operand is ignored for frame relay PUs or FRSESETs. Nor does SCOPE have any effect when you display resources in the directory database.

These values specify whether information is to be provided about the specified node's subordinate resources in addition to the information about the node itself. They are meaningful only for resources that have subordinate resources.

SCOPE=ACT

Specifies that, in addition to the resource specified on the ID operand, the name and status of all its active, pending, and connectable subordinate resources, if any, are to be displayed. If this display is undesirably large, you can use SCOPE=ACTONLY or SCOPE=CONCT to further limit the display.

SCOPE=ACTONLY

Specifies that, in addition to the resource specified on the ID operand, the name and status of all its active subordinate resources, if any, are to be displayed. The display does not include resources in pending or connectable states. If no resources are found in an active state, you can use SCOPE=ACT to broaden the scope of the display to active, connectable, and pending resources.

SCOPE=ACTSESS

Specifies that, in addition to the resource specified on the ID operand, the name of all its subordinate resources that are active with sessions, if any, are to be displayed.

SCOPE=ALL

Specifies that, in addition to the resource specified on the ID operand, the name and status of all its subordinate resources, if any, are to be displayed (regardless of their status).

SCOPE=CONCT

Specifies that, in addition to the resource specified on the ID operand, the name and status of all its subordinate resources in a CONCT (connectable) state, if any, are to be displayed. If no resources are found in a connectable state, you can use SCOPE=ACT to broaden the scope of the display to active, connectable, and pending resources.

SCOPE=INACT

Specifies that, in addition to the resource specified on the ID operand, the name and status of all its inactive subordinate resources, if any, are to be displayed. If this display is undesirably large, you can use SCOPE=INACTONLY or SCOPE=RESET to further limit the display.

SCOPE=INACTONLY

Specifies that, in addition to the resource specified on the ID operand, the name and status of all its inactive subordinate resources, if any, are to be displayed. Resources in a RESET state are not included in the SCOPE=INACTONLY display.

SCOPE=ONLY

Tells VTAM not to display the name and status of any subordinate resources.

SCOPE=PENDING
Specifies that, in addition to the resource specified on the ID operand, the name and status of all its pending subordinate resources, if any, are to be displayed. A pending state is a transient state to or from the fully active state.

SCOPE=RELSD
Specifies that the information is to be displayed about all PUs in a RELSD state within the specified major nodes.

SCOPE=RESET
Specifies that, in addition to the resource specified on the ID operand, the name and status of all its subordinate resources in a RESET state, if any, are to be displayed.

Resulting display

The resources that are displayed depend on their relationship within the hierarchy that is specified on the ID operand. The following lists show what resources are displayed for each major node or minor node.

Note: Independent LUs that are defined under a PU do not always appear in this output. Only independent LUs that are currently using the PU as a boundary function for multiple concurrent sessions are displayed.

A DISPLAY ID command issued at an APPN node might show a resource name appearing in several networks even though the resource actually exists in only one network. This can happen if intermediate SSCPs are pre-V4R1 and they pass only the 8-character resource name. The real network ID is therefore lost and other network IDs might be subsequently assumed.

For a DISPLAY ID command with IDTYPE=RESOURCE or IDTYPE=DIRECTRY, if the resource type that is displayed is EN, the node might actually be a network node, end node, or SSCP. This is because in a mixed APPN and subarea network, CPs and SSCPs that are found in or through a subarea network are represented in this host (the host where you are issuing this command) as end nodes which are served by the interchange node through which the resource was found.

Note: If model application program definitions are included in the display, any dynamic application programs built from those models that have been deactivated are not displayed. This is because dynamic application programs cannot exist in an inactive state. When a dynamic application program is deactivated and CLOSE macro processing is complete for the dynamic application program, the definition of the dynamic application program is deleted. The dynamic application program is no longer known by VTAM and will not appear in the output of any DISPLAY commands.

- Major nodes:
  - For ID=*ADJCP major node*, its subordinate nodes
  - For ID=*application program major node*, its subordinate applications:
    - Conventially defined application programs
    - Model application programs
    - Dynamic application programs built from model application program definitions
  - For ID=*CDRM major node*, its subordinate CDRMs
  - For ID=*CDRSC major node*, its subordinate CDRSCs

  - For ID=*channel-attachment major node*, its subordinate links
  - For ID=*external communications adapter (XCA) major node*, its subordinate links
  - For ID=*hostpu*, its subordinate cross-subarea links
  - For ID=*local non-SNA 3270 major node*, its subordinate logical units
  - For ID=*local_sna_major_node*:
    - Each PU providing local SNA connectivity and its subordinate logical units
    - Each PU providing APPN host-to-host connectivity
  - For ID=*lugroup major node*, its model LU groups, and their model LUs
  - For ID=*model major node*, its subordinate logical units and the physical units to which the logical units are subordinate
  - For ID=*NCP major node*, its subordinate links
  - For ID=*rapid transport protocol major node* (ISTRTPMN), its dynamic physical units
  - For ID=*switched major node*, its subordinate logical units and the physical units to which the logical units are subordinate
  - For ID=*transport resource list major node* (ISTTRL), its subordinate transport resource list entries (TRLEs)
- Minor nodes:
  - For ID=*conventionally defined application program* or ACB *name*:
    - For SCOPE=ACT, the established sessions with the application program
    - For SCOPE=INACT, the names of logical units waiting for sessions with the application program
    - For SCOPE=ALL, the information provided for both ACT and INACT, as described above
    - An indication if the application is a VCNS user
  - For ID=*model application program*
    - An indication that the application program is a model
    - A list of dynamic application programs that have been built from this model, or an indication that no dynamic application programs have been built from this model
    - An indication if the model application program definition specifies that any dynamic application programs built from the model are to be VCNS users
  - For ID=*dynamic application program*
    - An indication that the application program is a dynamic application program
    - The name of the model application program definition used to build the dynamic application program
    - For SCOPE=ACT, the established sessions with the dynamic application program
    - For SCOPE=ALL, the established sessions with the dynamic application program
    - An indication if the dynamic application program is a VCNS user
  - For ID=*CDRSC minor node*:
    - For SCOPE=ACT, the established sessions with the cross-domain resource
    - For SCOPE=INACT, the names of logical units waiting for sessions with the cross-domain resource
    - For SCOPE=ALL, the information provided for both ACT and INACT, as described in the preceding

  - For ID=*host* CDRM *name*, the host's network ID (where applicable), subarea and element addresses, and only the external CDRM session partner and session status for established sessions with the host CDRM
  - For ID=*same-network external* CDRM *name*:
    - HPR capability, if the same-network external CDRM is active
    - For SCOPE=ACT, active cross-domain resources owned by the external CDRM
    - For SCOPE=INACT, inactive cross-domain resources owned by the external CDRM
    - For SCOPE=ALL, all active or inactive cross-domain resources owned by the external CDRM
  - For ID=*cross-network external* CDRM *name*:
    - For SCOPE=ACT, active cross-network resources owned by the external CDRM
    - For SCOPE=INACT, inactive cross-network resources owned by the external CDRM
    - For SCOPE=ALL, all active or inactive cross-network resources owned by the external CDRM
  - For ID=*line group*:
    - For SCOPE=ALL, lines and PUs
    - For SCOPE=ACT, all active lines and all active PUs
    - For SCOPE=INACT, all inactive lines, all inactive PUs, and all active lines that have inactive PUs
    - For SCOPE=ONLY, only line group
  - For ID=*link*:
    - Its subordinate link stations, or
    - Its subordinate physical units and dependent logical units
  - For ID=*physical_unit*:
    - Its subordinate logical units
    - For a PU providing APPN host-to-host connectivity, the name, current status, and line control as specified by the TRLE operand on the PU definition statement
    - For a PU supported by a DLUR, the name of the DLUR and the switched major node that defines the PU
    - For a dynamic rapid transport protocol (RTP) PU, the data flow rate and the end-to-end route
    - For an HPR-capable PU in a type 2.1 node, the HPR capability.
  - For ID=*transport_resource_list_entry*:
    - Names of the CS z/OS upper-layer protocols (ULPs) using this TRLE
    - For a dynamic TCP TRLE, or an exclusively owned TRLE, only one message with a ULP ID will be issued, since there can only be one ULP using each of these TRLEs. For an OSA-Express Adapter, one message with a ULP ID will be issued for each datapath channel address used by a ULP. For other TRLEs, more than one ULP ID message may be issued, depending on how many ULPs are using the TRLE.
    - The ULP ID will be the jobname for TCP/IP ULPs, the SNA PU name for ANNC ULPs, and the XCA Major Node name for ATM or EE ULPs.
- Resources in the directory database:
  - The name of the resource

  - The entry type, such as dynamic
  - The resource type, such as network node
  - The owning CP
  - The network node server
  - For an LU resource:
    - The subarea number
    - The desired locate message size to retrieve routing information
    - The locate message size used when this LU was last searched
- Generic resource names:
  - Member name
  - Owning CP name
  - Whether the resource is currently available to be selected during resolution. *NO* indicates that the generic resource is on an end node that does not have a CP-CP session with its network node server, and is therefore not selected.
  - APPC value

Examples

Displaying an adjacent CP major node:

```
d net,id=istadjcp,scope=all
IST097I DISPLAY ACCEPTED
IST075I NAME = ISTADJCP, TYPE = ADJCP MAJOR NODE
IST486I STATUS= ACTIV     ,  DESIRED STATE= ACTIV
IST1100I ADJACENT CONTROL POINTS FROM MAJOR NODE ISTADJCP
IST1102I NODENAME          NODETYPE CONNECTIONS CP CONNECTIONS NATIVE
IST1103I NETB.VN1          VN       0           0              N/A
IST1103I NETA.VN1          VN       1           0              N/A
IST314I END
```

Displaying an application program major node, including model application programs and dynamic application programs built from those models:

```
d net,id=a01appls,scope=all
IST097I DISPLAY ACCEPTED
IST075I NAME = A01APPLS, TYPE = APPL SEGMENT
IST486I STATUS= ACTIV     , DESIRED STATE= ACTIV
IST360I APPLICATIONS:
IST080I APPL01   CONCT      APPL0102 CONCT      A01MVSNO CONCT
IST080I APPL1    CONCT      APPLA*   CONCT      APPL2    CONCT
IST080I APPLQ?   CONCT      APPL3    CONCT      APPLQ1   ACTIV
IST314I END
```

Displaying a CDRM major node:

```
d net,id=cdrm1a,scope=all
IST097I DISPLAY ACCEPTED
IST075I NAME = CDRM1A, TYPE = CDRM SEGMENT
IST486I STATUS= ACTIV, DESIRED STATE= ACTIV
IST477I CDRMS:
IST1546I CDRM     STATUS    SUBAREA ELEMENT NETID    SSCPID
IST1547I SSCP1A    ACTIV          1      1  NETA          1
IST1547I SSCPAA    NEVAC         10      1  NETA        N/A
IST1547I SSCP2A    NEVAC          2      1  NETA        N/A
IST1547I SSCPBA    NEVAC         11      1  NETA        N/A
IST1547I SSCPCA    NEVAC         12      1  NETA        N/A
IST1547I SSCP7B    ACTIV          5      1  NETB          7
IST1547I SSCP9C    ACTIV          8      3  NETC          9
IST1500I STATE TRACE = OFF
IST314I END
```

Displaying a CDRSC major node:

```
d net,id=istcdrdy,scope=all
IST097I DISPLAY ACCEPTED
IST075I NAME = ISTCDRDY, TYPE = CDRSC SEGMENT
IST486I STATUS= ACTIV     , DESIRED STATE= ACTIV
IST478I CDRSCS:
IST483I C25NVLUC ACTIV----Y, CDRM = ***NA***, NETID = NETA
IST483I B01NVLUC ACTIV----Y, CDRM = ***NA***, NETID = NETA
IST483I A81NVLUC ACTIV----Y, CDRM = ***NA***, NETID = NETA
IST483I A03D207F ACT/S----Y, CDRM = A01N    , NETID = NETA
IST483I A02NVLUC ACT/S----Y, CDRM = A01N    , NETID = NETA
IST483I ECHO02A  ACT/S----Y, CDRM = A01N    , NETID = NETA
IST483I A50NVLUC ACT/S----Y, CDRM = A01N    , NETID = NETA
IST483I A500N    ACT/S----Y, CDRM = A01N    , NETID = NETA
IST483I A02N     ACT/S----Y, CDRM = A01N    , NETID = NETA
IST314I END
```

Displaying a CDRSC major node for a specific network:

```
d net,id=a99cdrsc,netid=netc,scope=all
IST097I DISPLAY ACCEPTED
IST075I NAME = A99CDRSC, TYPE = CDRSC SEGMENT
IST486I STATUS= ACTIV     , DESIRED STATE= ACTIV
IST478I CDRSCS:
IST483I CECHO01  ACTIV     , CDRM = C01M    , NETID = NETC
IST483I TPNSC01  ACTIV     , CDRM = C01M    , NETID = NETC
IST483I C01NVLUC ACTIV     , CDRM = C01M    , NETID = NETC
IST483I TSO11    ACTIV     , CDRM = ***NA***, NETID = NETC
IST483I ECHO11   ACTIV     , CDRM = C11M    , NETID = NETC
IST483I C11NVLUC ACTIV     , CDRM = C11M    , NETID = NETC
IST483I TSO255   ACTIV     , CDRM = ***NA***, NETID = NETC
IST483I ECHO255  ACTIV     , CDRM = C255M   , NETID = NETC
IST483I C255NLUC ACTIV     , CDRM = C255M   , NETID = NETC
IST314I END
```

Displaying a local SNA major node:

```
d net,id=a50lsna,scope=all
IST097I DISPLAY ACCEPTED
IST075I NAME = A50LSNA, TYPE = LCL SNA MAJ NODE
IST486I STATUS= ACTIV     , DESIRED STATE= ACTIV
IST084I NETWORK NODES:
IST089I PUA      TYPE = PU_T2            , ACTIV      ,CUA=0770
IST089I LSNALU1  TYPE = LOGICAL UNIT     , ACTIV
IST089I LSNALU2  TYPE = LOGICAL UNIT     , ACTIV
IST089I LSNALU3  TYPE = LOGICAL UNIT     , ACTIV
IST089I LSNALU4  TYPE = LOGICAL UNIT     , ACTIV
IST314I END
```

Displaying a local SNA major node for each PU providing APPN host-to-host connectivity:

```
d net,id=lsna1a,scope=all
IST097I DISPLAY ACCEPTED
IST075I NAME = LSNA1A, TYPE = LCL SNA MAJ NODE
IST486I STATUS= ACTIV     , DESIRED STATE= ACTIV
IST084I NETWORK NODES:
IST1316I PU NAME = AHHCPU1   STATUS = NEVAC       TRLE = ML1A2A2
IST1316I PU NAME = AHHCPU2   STATUS = NEVAC       TRLE = ML1A2A3
IST1316I PU NAME = AHHCPU3   STATUS = NEVAC       TRLE = ML1A2A4
IST314I END
```

Displaying the dynamic XCF local SNA major node:

```
d net,id=istlsxcf,scope=all
IST097I DISPLAY ACCEPTED
IST075I NAME = ISTLSXCF, TYPE = LCL SNA MAJ NODE
IST486I STATUS= ACTIV, DESIRED STATE= ACTIV
```

```
IST084I NETWORK RESOURCES:
IST1316I PU NAME = ISTP0001  STATUS = ACTIV--LX-  TRLE = ISTT0001
IST1500I STATE TRACE = OFF
IST314I END
```

Displaying a transport resource list major node:

```
d net,id=isttrl,scope=all
IST097I DISPLAY ACCEPTED
IST075I NAME = ISTTRL, TYPE = TRL MAJOR NODE
IST1314I TRLE = IUTSAMEH  STATUS = ACTIV----E  CONTROL = MPC
IST1314I TRLE = ML1A2A1   STATUS = NEVAC       CONTROL = MPC
IST1314I TRLE = ML1A2A2   STATUS = NEVAC       CONTROL = MPC
IST1314I TRLE = ML1A2A3   STATUS = NEVAC       CONTROL = MPC
IST1314I TRLE = ML1A2A4   STATUS = NEVAC       CONTROL = MPC
IST1314I TRLE = ML1A2A5   STATUS = NEVAC       CONTROL = MPC
IST1314I TRLE = ISTT0201  STATUS = INACT       CONTROL = XCF
IST314I END
```

Displaying a local non-SNA 3270 major node:

```
d net,id=a01local,scope=all
IST097I DISPLAY ACCEPTED
IST075I NAME = A01LOCAL, TYPE = LCL 3270 MAJ NODE
IST486I STATUS= ACTIV     , DESIRED STATE= ACTIV
IST355I LOGICAL UNITS:
IST089I A01A741  TYPE = LOGICAL UNIT     , NEVAC      ,CUA=0741
IST089I A01A742  TYPE = LOGICAL UNIT     , NEVAC      ,CUA=0742
IST089I A01A743  TYPE = LOGICAL UNIT     , NEVAC      ,CUA=0743
IST089I A01A744  TYPE = LOGICAL UNIT     , NEVAC      ,CUA=0744
IST089I A01A745  TYPE = LOGICAL UNIT     , NEVAC      ,CUA=0745
IST089I A01A746  TYPE = LOGICAL UNIT     , NEVAC      ,CUA=0746
IST089I A01A747  TYPE = LOGICAL UNIT     , NEVAC      ,CUA=0747
IST089I A01A748  TYPE = LOGICAL UNIT     , NEVAC      ,CUA=0748
IST089I A01A721  TYPE = LOGICAL UNIT     , ACT/S      ,CUA=0721
IST089I A01A722  TYPE = LOGICAL UNIT     , ACTIV      ,CUA=0722
IST089I A01A723  TYPE = LOGICAL UNIT     , ACTIV      ,CUA=0723
IST089I A01A724  TYPE = LOGICAL UNIT     , ACTIV      ,CUA=0724
IST089I A01A725  TYPE = LOGICAL UNIT     , ACTIV      ,CUA=0725
IST089I A01A726  TYPE = LOGICAL UNIT     , NEVAC      ,CUA=0726
IST314I END
```

Displaying an NCP major node:

```
d net,id=a0462zc,scope=all
IST097I DISPLAY ACCEPTED
IST075I NAME = A0462ZC, TYPE = PU T4/5
IST486I STATUS= ACTIV     , DESIRED STATE= ACTIV
IST247I LOAD/DUMP PROCEDURE STATUS = RESET
IST1656I VTAMTOPO = REPORT, NODE REPORTED - YES
IST484I SUBAREA = 4
IST391I ADJ LINK STATION = 0017-S, LINE = 0017-L, NODE = ISTPUS
IST654I I/O TRACE = OFF, BUFFER TRACE = OFF
IST077I SIO = 50078 CUA = 0017
IST675I VR = 0, TP = 2
IST170I LINES:
IST080I A04B00   NEVAC      A04B01   NEVAC      A04B03   NEVAC
IST080I A04B32   NEVAC      A04B33   NEVAC      A04B35   NEVAC
IST080I A04VXX   NEVAC----T A04S02   NEVAC      A04S34   NEVAC
IST080I A04S04   NEVAC      A04S16   NEVAC      A04S20   NEVAC
IST080I A04S36   NEVAC      A04S48   NEVAC      A04S52   NEVAC
IST080I A04S128  NEVAC      A04S136  NEVAC      A04PT88  ACTIV
IST080I A04C00   NEVAC      A04C02   NEVAC
IST314I END
```

Displaying the host physical unit:

```
d net,id=istpus,scope=all
IST097I DISPLAY ACCEPTED
IST075I NAME = ISTPUS, TYPE = PU T4/5 060
IST486I STATUS= ACTIV, DESIRED STATE= ACTIV
IST596I IRN TRACE = OFF
IST1656I VTAMTOPO = INCLUDE, NODE REPORTED - YES
IST484I SUBAREA = 1
IST925I DYNAMIC PATH DEFINITION PATH1A STATUS = ACTIV
IST654I I/O TRACE = OFF, BUFFER TRACE = OFF
IST1500I STATE TRACE = OFF
IST170I LINES:
IST080I 091C-L   ACTIV----I
IST314I END
```

Displaying the rapid transport protocol (RTP) major node:

```
d net,id=istrtpmn,scope=all
IST097I DISPLAY ACCEPTED
IST075I NAME = ISTRTPMN, TYPE = RTP MAJOR NODE
IST486I STATUS= ACTIV, DESIRED STATE= ACTIV
IST1486I   RTP NAME   STATE             DESTINATION CP     MNPS  TYPE
IST1487I   CNR00004   CONNECTED         NETA.SSCP2A        NO    LULU
IST1487I   CNR00003   CONNECTED         NETA.SSCP2A        NO    RSTP
IST1487I   CNR00002   CONNECTED         NETA.SSCP2A        NO    CPCP
IST1487I   CNR00001   CONNECTED         NETA.SSCP2A        NO    CPCP
IST314I END
```

Displaying a switched major node:

```
d net,id=a04smnc,scope=all
IST097I DISPLAY ACCEPTED
IST075I NAME = A04SMNC, TYPE = SW SNA MAJ NODE
IST486I STATUS= ACTIV     , DESIRED STATE= ACTIV
IST1656I VTAMTOPO = REPORT, NODE REPORTED - YES
IST084I NETWORK NODES:
IST089I A04P882  TYPE = PU_T2            , ACTIV--L--
IST089I A04P883  TYPE = PU_T2            , ACTIV--L--
IST089I A04D8831 TYPE = LOGICAL UNIT     , ACTIV
IST089I A04D8832 TYPE = LOGICAL UNIT     , ACTIV
IST089I A04D8833 TYPE = LOGICAL UNIT     , ACT/S
IST089I A04D8834 TYPE = LOGICAL UNIT     , ACTIV
IST089I A04D8835 TYPE = LOGICAL UNIT     , ACTIV
IST089I A04D8836 TYPE = LOGICAL UNIT     , ACT/S
IST089I A04D8837 TYPE = LOGICAL UNIT     , ACT/S
IST089I A04P885  TYPE = PU_T2            , ACTIV--L--
IST089I A04P886  TYPE = PU_T2            , ACTIV--L--
IST089I A04D8861 TYPE = LOGICAL UNIT     , ACT/S
IST089I A04D8862 TYPE = LOGICAL UNIT     , ACT/S
IST089I A04D8863 TYPE = LOGICAL UNIT     , ACTIV
IST089I A04D8864 TYPE = LOGICAL UNIT     , ACTIV
IST314I END
```

Displaying a channel-attachment major node:

```
d net,id=ctcbc0t3,scope=all
IST097I DISPLAY  ACCEPTED
IST075I NAME = CTCBC0T3         , TYPE = CA MAJOR NODE
IST486I STATUS= ACTIV     , DESIRED STATE= ACTIV
IST654I I/O TRACE = OFF, BUFFER TRACE = OFF
IST170I LINES:
IST232I CTCLBC03, ACTIV----E, CUA = BC0
IST314I END
```

Displaying an XCA major node with its subordinate resources:

```
d net,id=xca1a,scope=all
IST097I DISPLAY ACCEPTED
IST075I NAME = XCA1A, TYPE = XCA MAJOR NODE
```

```
IST486I STATUS= ACTIV      , DESIRED STATE= ACTIV
IST1021I MEDIUM=RING,ADAPNO= 1,CUA=0500,SNA SAP= 8
IST1324I VNNAME =  NETA.CN1           VNGROUP = GP1A2A
IST1105I RESOURCE STATUS TGN CP-CP TG CHARACTERISTICS
IST1106I XCA1A    AC/R    21 NO    902D00000000000000000017100808080
IST654I I/O TRACE = OFF, BUFFER TRACE = OFF
IST1656I VTAMTOPO = REPORT, NODE REPORTED - YES
IST170I LINES:
IST232I LN1A2A  , ACTIV
IST232I LN1A7B  , NEVAC
IST232I LN1A9C  , NEVAC
IST232I LN1AAA  , NEVAC
IST232I LN1ABA  , NEVAC
IST232I LN1ACA  , NEVAC
IST232I LN1ADA  , NEVAC
IST232I LN1AEA  , NEVAC
IST314I END
```

Displaying an XCA major node without its subordinate resources:

```
d net,id=x50rbf4a
IST097I DISPLAY ACCEPTED
IST075I NAME = X50RBF4A, TYPE = XCA MAJOR NODE
IST486I STATUS= ACTIV      , DESIRED STATE= ACTIV
IST1021I MEDIUM=RING,ADAPNO= 0,CUA=0BF4,SNA SAP= 4
IST654I I/O TRACE = OFF, BUFFER TRACE = OFF
IST1656I VTAMTOPO = REPORT, NODE REPORTED - YES
IST314I END
```

Displaying an XCA major node that defines a native ATM port:

```
d net,id=xcaosa1a,scope=all
IST097I DISPLAY ACCEPTED
IST075I NAME = XCAOSA1A, TYPE = XCA MAJOR NODE
IST486I STATUS= ACTIV, DESIRED STATE= ACTIV
IST1557I MEDIUM = ATM, PORT NAME = OSA11
IST1559I ATM ADDRESS                                    TYPE      FORMAT
IST1553I 11111111111111111111111111111111111100    LOCAL     NSAP
IST1324I VNNAME = NETA.SSCPVN        VNGROUP = GP1A2AC
IST1559I ATM ADDRESS                                    TYPE      FORMAT
IST1553I 21111111111111111111111111111111111110    GATEWAY   NSAP
IST1105I RESOURCE STATUS TGN CP-CP TG CHARACTERISTICS
IST1106I XCAOSA1A AC/R    21 NO    1075000000000000000014C00808080
IST654I I/O TRACE = OFF, BUFFER TRACE = OFF
IST1656I VTAMTOPO = REPORT, NODE REPORTED - YES
IST170I LINES:
IST232I LN1A2A   ACTIV
IST232I LNP1A2A1 ACTIV
IST232I LN1A2AC1 ACTIV
IST314I END
```

Displaying an XCA major node group that defines a transmission group (TG) to a native ATM connection network:

```
d net,id=gp1a2ac,scope=all
IST097I DISPLAY ACCEPTED
IST075I NAME = GP1A2AC, TYPE = LINE GROUP
IST486I STATUS= ACTIV, DESIRED STATE= ACTIV
IST231I XCA MAJOR NODE = XCAOSA1A
IST1485I DLCADDR SUBFIELDS FOR GP1A2AC
IST1318I 1,C'ATMSVCNETA.SSCPVNEXCLUSIVE'
IST1318I 7,BCD'03000000 40000000 40000000 536000'
IST1318I 8,X'0003'
IST1318I 21,X'00022111 11111111 11111111 11111111 11111111 1110'
IST084I NETWORK RESOURCES:
IST089I LN1A2AC1 TYPE = LINE             , ACTIV
IST314I END
```

Displaying an XCA major node that defines Enterprise Extender:

```
d net,id=xcahpr1a,scope=all
IST097I DISPLAY ACCEPTED
IST075I NAME = XCAHPR1A, TYPE = XCA MAJOR NODE
IST486I STATUS= ACTIV, DESIRED STATE= ACTIV
IST1679I MEDIUM = HPRIP
IST1685I TCP/IP JOB NAME = TCPR6A
IST1680I LOCAL IP ADDRESS 223.254.254.254
IST1324I VNNAME = NETA.SSCPVN           VNGROUP = GP1A2AC
IST1105I RESOURCE STATUS TGN CP-CP TG CHARACTERISTICS
IST1106I XCAHPR1A AC/R     21 NO    1075000000000000000014C00808080
IST654I I/O TRACE = OFF, BUFFER TRACE = OFF
IST170I LINES:
IST232I LN1A2A   ACTIV
IST232I LNP1A2A1 ACTIV
IST232I LN1A2AC1 ACTIV
IST314I END
```

Displaying an adjacent CP (CDRSC minor node):

```
d net,id=neta.sscp2a,idtype=cp,scope=all
IST097I DISPLAY ACCEPTED
IST075I NAME = NETA.SSCP2A, TYPE = ADJACENT CP
IST1046I SSCP NETA.SSCP2A ALSO EXISTS
IST486I STATUS= ACT/S----Y, DESIRED STATE= ACTIV - TRACE= OFF
IST1447I REGISTRATION TYPE = NO
IST977I MDLTAB=***NA*** ASLTAB=***NA***
IST1333I ADJLIST = ***NA***
IST861I MODETAB=***NA*** USSTAB=***NA*** LOGTAB=***NA***
IST934I DLOGMOD=***NA*** USS LANGTAB=***NA***
IST597I CAPABILITY-PLU ENABLED  ,SLU ENABLED  ,SESSION LIMIT NONE
IST231I CDRSC MAJOR NODE = ISTCDRDY
IST479I CDRM NAME = SSCP1A, VERIFY OWNER = NO
IST1184I CPNAME = NETA.SSCP2A - NETSRVR = ***NA***
IST1044I ALSLIST = ISTAPNPU
IST082I DEVTYPE = INDEPENDENT LU / CDRSC
IST654I I/O TRACE = OFF, BUFFER TRACE = OFF
IST171I ACTIVE SESSIONS = 0000000002, SESSION REQUESTS = 0000000002
IST206I SESSIONS:
IST1081I ADJACENT LINK STATION = P3A21
IST634I NAME     STATUS         SID          SEND RECV VR TP NETID
IST635I SSCP1A   ACTIV/CP-S F6ABEEC38077021A 0002 0001  0  0 NETA
IST635I SSCP1A   ACTIV/CP-P EAABEEC37D76FABF 0001 0002  0  0 NETA
IST314I END
```

Displaying a dependent LU requester:

```
d net,id=nncpa1,scope=all
IST097I DISPLAY ACCEPTED
IST075I NAME = NETA.NNCPA1, TYPE = ADJACENT CP
IST486I STATUS= ACT/S----Y, DESIRED STATE= ACTIV
IST977I MDLTAB=***NA*** ASLTAB=***NA***
IST861I MODETAB=***NA*** USSTAB=***NA*** LOGTAB=***NA***
IST934I DLOGMOD=CPSVCMG USS LANGTAB=***NA***
IST597I CAPABILITY-PLU ENABLED  ,SLU ENABLED  ,SESSION LIMIT NONE
IST231I CDRSC MAJOR NODE = ISTCDRDY
IST1044I ALSLIST = ISTAPNPU
IST1131 DEVICE = ILU/CDRSC
IST654I I/O TRACE = OFF, BUFFER TRACE = OFF
IST228I ENCRYPTION = OPT, TYPE = TDES24
IST1563I CKEYNAME = NNCPA1 CKEY = PRIMARY CERTIFY = NO
IST1552I MAC = NONE MACTYPE = NONE
IST171I ACTIVE SESSIONS = 0000000004, SESSION REQUESTS = 0000000004
IST206I SESSIONS:
IST1081I ADJACENT LINK STATION = P3A4956K
IST634I NAME     STATUS         SID          SEND RECV VR TP NETID
IST635I SSCP1A   ACTIV/DL-S E2C5E2E2D6D5000B 001C 0000  0  0 NETA
```

```
IST635I SSCP1A   ACTIV/CP-S E2C5E2E2D6D50005 0004 0001  0  0 NETA
IST635I SSCP1A   ACTIV/DL-P EAABEEC3361D945A 0000 0012  0  0 NETA
IST635I SSCP1A   ACTIV/CP-P EAABEEC3361D945B 0001 0005  0  0 NETA
IST1355I PHYSICAL UNITS SUPPORTED BY DLUR NETA.NNCPA1
IST089I AA1PUA   TYPE = PU_T2            , ACTIV
IST089I AA1PUB   TYPE = PU_T2            , ACTIV
IST924I -------------------------------------------------------------
IST075I NAME = NETA.NNCPA1, TYPE = DIRECTORY ENTRY
IST1186I DIRECTORY ENTRY = DYNAMIC NN
IST1184I CPNAME = NETA.NNCPA1 - NETSRVR = ***NA***
IST314I END
```

Displaying an SSCP (CDRM minor node) with virtual-route-based transmission group support:

```
d net,id=neta.sscp2a,idtype=sscp,scope=all
IST097I DISPLAY ACCEPTED
IST075I NAME = NETA.SSCP2A, TYPE = CDRM
IST1046I CP NETA.SSCP2A ALSO EXISTS
IST486I STATUS= ACTIV     , DESIRED STATE= ACTIV
IST815I AUTOMATIC RECOVERY IS SUPPORTED
IST231I CDRM  MAJOR NODE = CDRM1A
IST654I I/O TRACE = OFF, BUFFER TRACE = OFF
IST476I CDRM TYPE = EXTERNAL
IST637I SUBAREA= 2   ELEMENT= 1 SSCPID = 2
IST675I VR = 0, TP = 0
IST389I PREDEFINITION OF CDRSC = OPT
IST1105I RESOURCE STATUS TGN CP-CP TG CHARACTERISTICS
IST1106I SSCP2A   AC/R   255 YES   982D0000000000000000017100808080
IST636I CDRSCS OWNED BY SSCP2A   -
IST080I L4A3278A ACTIV      L4A3279A ACTIV      L4A3767D ACTIV
IST080I L4A3278B ACTIV      L4A3279B ACTIV      L4A3287B ACTIV
IST080I L4A3767E ACTIV      L4A4956D ACTIV      L4A4956E ACTIV
IST080I L4A4956F ACTIV      NETAPPL1 ACTIV      NETAPPL2 ACTIV
IST080I NETAPPL3 ACTIV      NETAPPL4 ACTIV      APLMDSEC ACTIV
IST080I TSO2     ACTIV
IST314I END
```

Displaying an SSCP (CDRM) and adjacent CP (CDRSC) with the same name from a network node:

```
d net,id=sscp2a,scope=all
IST097I DISPLAY ACCEPTED
IST075I NAME = NETA.SSCP2A, TYPE = CDRM
IST1046I CP NETA.SSCP2A ALSO EXISTS
IST486I STATUS= NEVAC, DESIRED STATE= INACT - TRACE= OFF
IST815I AUTOMATIC RECOVERY IS SUPPORTED
IST231I CDRM MAJOR NODE = CDRM1A
IST654I I/O TRACE = OFF, BUFFER TRACE = OFF
IST476I CDRM TYPE = EXTERNAL
IST637I SUBAREA= 2   ELEMENT= 1 SSCPID = 2
IST389I PREDEFINITION OF CDRSC = OPT
IST636I CDRSCS OWNED BY SSCP2A   -
IST080I NETAPPL1 PNF/S
IST924I -------------------------------------------------------------
IST075I NAME = NETA.SSCP2A, TYPE = ADJACENT CP
IST1046I SSCP NETA.SSCP2A ALSO EXISTS
IST486I STATUS= ACT/S----Y, DESIRED STATE= ACTIV - TRACE= OFF
IST1447I REGISTRATION TYPE = NO
IST977I MDLTAB=***NA*** ASLTAB=***NA***
IST1333I ADJLIST = ***NA***
IST861I MODETAB=***NA*** USSTAB=***NA*** LOGTAB=***NA***
IST934I DLOGMOD=***NA*** USS LANGTAB=***NA***
IST597I CAPABILITY-PLU ENABLED  ,SLU ENABLED  ,SESSION LIMIT NONE
IST231I CDRSC MAJOR NODE = ISTCDRDY
IST479I CDRM NAME = SSCP1A, VERIFY OWNER = NO
IST1184I CPNAME = NETA.SSCP2A - NETSRVR = ***NA***
```

```
IST1044I ALSLIST = ISTAPNPU
IST082I DEVTYPE = INDEPENDENT LU / CDRSC
IST654I I/O TRACE = OFF, BUFFER TRACE = OFF
IST171I ACTIVE SESSIONS = 0000000002, SESSION REQUESTS = 0000000002
IST206I SESSIONS:
IST1081I ADJACENT LINK STATION = P3A21
IST634I NAME     STATUS         SID          SEND RECV VR TP NETID
IST635I SSCP1A   ACTIV/CP-S F6ABEEC38077021A 0006 0001  0  0 NETA
IST635I SSCP1A   ACTIV/CP-P EAABEEC37D76FABF 0001 0006  0  0 NETA
IST924I -------------------------------------------------------------
IST075I NAME = NETA.SSCP2A, TYPE = DIRECTORY ENTRY
IST1186I DIRECTORY ENTRY = DYNAMIC NN
IST1184I CPNAME = NETA.SSCP2A - NETSRVR = ***NA***
IST314I END
```

Displaying an SSCP (CDRM) and a host CP (application) with the same name:

```
d net,id=neta.sscp1a,idtype=resource,scope=all
IST097I DISPLAY ACCEPTED
IST075I NAME = NETA.SSCP1A, TYPE = CDRM
IST1046I CP NETA.SSCP1A ALSO EXISTS
IST486I STATUS= ACTIV     , DESIRED STATE= ACTIV
IST815I AUTOMATIC RECOVERY IS SUPPORTED
IST231I CDRM  MAJOR NODE = VTAMSEG
IST654I I/O TRACE = OFF, BUFFER TRACE = OFF
IST476I CDRM TYPE = HOST, GATEWAY CAPABLE
IST637I SUBAREA= 2   ELEMENT= 1 SSCPID = 2
IST388I DYNAMIC CDRSC DEFINITION SUPPORT = YES
IST171I ACTIVE SESSIONS = 0000000000, SESSION REQUESTS = 0000000000
IST172I NO SESSIONS EXIST
IST924I -------------------------------------------------------------
IST075I NAME = NETA.SSCP1A, TYPE = HOST CP
IST1046I SSCP NETA.SSCP1A ALSO EXISTS
IST486I STATUS= ACT/S     , DESIRED STATE= ACTIV
IST977I MDLTAB=***NA*** ASLTAB=***NA***
IST861I MODETAB=***NA*** USSTAB=***NA*** LOGTAB=***NA***
IST934I DLOGMOD=***NA*** USS LANGTAB=***NA***
IST597I CAPABILITY-PLU ENABLED  ,SLU ENABLED  ,SESSION LIMIT NONE
IST231I APPL  MAJOR NODE = VTAMSEG
IST654I I/O TRACE = OFF, BUFFER TRACE = OFF
IST271I JOBNAME = VTAM    , STEPNAME = VTAM    , DSPNAME = 0AAABIST
IST228I ENCRYPTION = NONE, TYPE = DES
IST1563I CKEYNAME = SSCP1A CKEY = PRIMARY CERTIFY = NO
IST1552I MAC = NONE MACTYPE = NONE
IST1050I MAXIMUM COMPRESSION LEVEL - INPUT = 0, OUTPUT = 0
IST171I ACTIVE SESSIONS = 0000000002, SESSION REQUESTS = 0000000000
IST206I SESSIONS:
IST634I NAME     STATUS         SID          SEND RECV VR TP NETID
IST635I SSCP2A   ACTIV/CP-S EAABEEC3F11FF31F 0002 0001       NETA
IST635I SSCP2A   ACTIV/CP-P F6ABEEC3F4203D93 0001 0002       NETA
IST314I END
```

Displaying the host (this command works for any host). This display shows an interchange node:

```
d net,id=vtam
IST097I DISPLAY ACCEPTED
IST075I NAME = VTAM, TYPE = CDRM 404
IST1046I CP NETA.SSCP1A ALSO EXISTS
IST486I STATUS= ACTIV, DESIRED STATE= ACTIV
IST599I REAL NAME = NETA.SSCP1A
IST815I AUTOMATIC RECOVERY IS SUPPORTED
IST231I CDRM MAJOR NODE = VTAMSEG
IST654I I/O TRACE = OFF, BUFFER TRACE = OFF
IST1500I STATE TRACE = OFF
IST476I CDRM TYPE = HOST GATEWAY CAPABLE
IST637I SUBAREA = 1 ELEMENT = 1 SSCPID = 1
```

```
IST388I DYNAMIC CDRSC DEFINITION SUPPORT = YES
IST171I ACTIVE SESSIONS = 0000000000, SESSION REQUESTS = 0000000000
IST924I -------------------------------------------------------------
IST075I NAME = NETA.SSCP1A, TYPE = HOST CP
IST1046I SSCP NETA.SSCP1A ALSO EXISTS
IST486I STATUS= ACT/S, DESIRED STATE= ACTIV
IST1447I REGISTRATION TYPE = NO
IST1501I XCF TOKEN = 010000B7000F0001
IST977I MDLTAB=***NA*** ASLTAB=***NA***
IST861I MODETAB=***NA*** USSTAB=***NA*** LOGTAB=***NA***
IST934I DLOGMOD=***NA*** USS LANGTAB=***NA***
IST1632I VPACING = 63
IST597I CAPABILITY-PLU ENABLED  ,SLU ENABLED  ,SESSION LIMIT NONE
IST231I APPL MAJOR NODE = VTAMSEG
IST654I I/O TRACE = OFF, BUFFER TRACE = OFF
IST1500I STATE TRACE = OFF
IST271I JOBNAME = VTAM550T, STEPNAME = NET, DSPNAME = ISTEAF13
IST228I ENCRYPTION = NONE, TYPE = DES
IST1563I CKEYNAME = SSCP1A CKEY = PRIMARY CERTIFY = NO
IST1552I MAC = NONE MACTYPE = NONE
IST1050I MAXIMUM COMPRESSION LEVEL - INPUT = 0, OUTPUT = 0
IST1633I ASRCVLM = 1999999
IST1634I DATA SPACE USAGE: CURRENT = 0 MAXIMUM = 272
IST171I ACTIVE SESSIONS = 0000000002, SESSION REQUESTS = 0000000000
IST314I END
```

Displaying a CDRSC (no SSCP, adajcent CP, or host CP was found with this name) from a network node:

```
d net,id=neta.netappl1,idtype=resource,scope=all
IST097I DISPLAY ACCEPTED
IST075I NAME = NETA.NETAPPL1, TYPE = CDRSC
IST486I STATUS= ACT/S, DESIRED STATE= ACTIV
IST1447I REGISTRATION TYPE = NO
IST977I MDLTAB=***NA*** ASLTAB=***NA***
IST1333I ADJLIST = ***NA***
IST861I MODETAB=***NA*** USSTAB=***NA*** LOGTAB=***NA***
IST934I DLOGMOD=***NA*** USS LANGTAB=***NA***
IST597I CAPABILITY-PLU ENABLED  ,SLU ENABLED  ,SESSION LIMIT NONE
IST231I CDRSC MAJOR NODE = CDRSC1A
IST479I CDRM NAME = SSCP2A, VERIFY OWNER = NO
IST1184I CPNAME = NETA.SSCP2A - NETSRVR = ***NA***
IST1044I ALSLIST = ISTAPNPU
IST082I DEVTYPE = INDEPENDENT LU / CDRSC
IST654I I/O TRACE = OFF, BUFFER TRACE = OFF
IST1500I STATE TRACE = OFF
IST228I ENCRYPTION = NONE, TYPE = DES
IST1563I CKEYNAME = NETAPPL1 CKEY = PRIMARY CERTIFY = NO
IST1552I MAC = NONE MACTYPE = NONE
IST171I ACTIVE SESSIONS = 0000000001, SESSION REQUESTS = 0000000000
IST206I SESSIONS:
IST1081I ADJACENT LINK STATION = P3A21
IST634I NAME     STATUS         SID          SEND RECV VR TP NETID
IST635I APPL1    ACTIV-P    EAABEEC356FA371B 0000 0000  0  0 NETA
IST924I -------------------------------------------------------------
IST075I NAME = NETA.NETAPPL1, TYPE = DIRECTORY ENTRY
IST1186I DIRECTORY ENTRY = DYNAMIC LU
IST1184I CPNAME = NETA.SSCP2A - NETSRVR = ***NA***
IST484I SUBAREA = 2
IST1703I DESIRED LOCATE SIZE = 1K LAST LOCATE SIZE = 16K
IST314I END
```

Displaying directory information for a resource (no SSCP, adjacent CP, host CP, or other resource was found with this name) and the command was issued at a network node or interchange node:

```
d net,id=neta.lu71,idtype=resource,scope=all
IST097I DISPLAY ACCEPTED
IST075I NAME = NETA.LU71, TYPE = DIRECTORY ENTRY
IST1186I DIRECTORY ENTRY = DYNAMIC LU
IST1184I CPNAME = NETA.NN3 - NETSRVR = ***NA***
IST484I SUBAREA = ****NA****
IST1703I DESIRED LOCATE SIZE = 1K LAST LOCATE SIZE = 16K
IST314I END
```

Displaying only directory information for a resource:

```
d net,id=sscp2a,idtype=directry,scope=all
IST097I DISPLAY ACCEPTED
IST075I NAME = NETA.SSCP2A, TYPE = DIRECTORY ENTRY
IST1186I DIRECTORY ENTRY = DYNAMIC NN
IST1184I CPNAME = NETA.SSCP2A   - NETSRVR = ***NA***
IST314I END
```

Displaying a conventionally defined application program:

```
d net,id=appl1,scope=all
IST097I DISPLAY ACCEPTED
IST075I NAME = NETA.APPL1, TYPE = APPL
IST486I STATUS= ACT/S, DESIRED STATE= ACTIV - TRACE= OFF
IST1447I REGISTRATION TYPE = CDSERVR
IST977I MDLTAB=***NA*** ASLTAB=***NA***
IST861I MODETAB=***NA*** USSTAB=***NA*** LOGTAB=***NA***
IST934I DLOGMOD=***NA*** USS LANGTAB=***NA***
IST1632I VPACING =  7
IST597I CAPABILITY-PLU ENABLED  ,SLU ENABLED  ,SESSION LIMIT NONE
IST231I APPL MAJOR NODE = APPL1A
IST654I I/O TRACE = OFF, BUFFER TRACE = OFF
IST1500I STATE TRACE = OFF
IST271I JOBNAME = ECHO, STEPNAME = ECHO, DSPNAME = IST6D2D6
IST228I ENCRYPTION = OPTIONAL, TYPE = DES
IST1563I CKEYNAME = APPL1 CKEY = PRIMARY CERTIFY = NO
IST1552I MAC = NONE MACTYPE = NONE
IST1050I MAXIMUM COMPRESSION LEVEL - INPUT = 0, OUTPUT = 0
IST1633I ASRCVLM = 2000000
IST1634I DATA SPACE USAGE: CURRENT = 0 MAXIMUM = 0
IST171I ACTIVE SESSIONS = 0000000001, SESSION REQUESTS = 0000000001
IST206I SESSIONS:
IST634I NAME     STATUS         SID          SEND RECV VR TP NETID
IST635I NETAPPL1 ACTIV-S    EAABEEC37D76FAC1 0000 0000  0  0 NETA
IST314I END
```

Displaying a model application program:

```
d net,id=appl*,scope=all
IST097I DISPLAY ACCEPTED
IST075I NAME = NETA.APPL*, TYPE = MODEL APPL
IST486I STATUS= CONCT, DESIRED STATE= CONCT - TRACE= OFF
IST1447I REGISTRATION TYPE = CDSERVR
IST977I MDLTAB=***NA*** ASLTAB=***NA***
IST861I MODETAB=***NA*** USSTAB=***NA*** LOGTAB=***NA***
IST934I DLOGMOD=***NA*** USS LANGTAB=***NA***
IST597I CAPABILITY-PLU INHIBITED,SLU INHIBITED,SESSION LIMIT NON
IST231I APPL MAJOR NODE = APPL1A
IST654I I/O TRACE = OFF, BUFFER TRACE = OFF
IST271I JOBNAME = ***NA***, STEPNAME = ***NA***, DSPNAME = ***NA
IST228I ENCRYPTION = OPTIONAL, TYPE = DES
IST1563I CKEYNAME = APPL* CKEY = PRIMARY CERTIFY = NO
IST1552I MAC = NONE MACTYPE = NONE
IST1050I MAXIMUM COMPRESSION LEVEL - INPUT = 0, OUTPUT = 0
IST1424I APPLICATIONS DEFINED USING THIS MODEL:
IST080I APPL1  ACTIV
IST314I END
```

Displaying a multinode persistent session application program from a remote node connected to the MNPS coupling facilty structure could result in any of the following:

```
d net,id=mapplx1,e
IST097I DISPLAY ACCEPTED
IST075I NAME = NETA.MAPPLX1, TYPE = APPL
IST1549I OWNER = NETA.SSCP2A MNPS STATE = DISABLED
IST924I -------------------------------------------------------------
IST075I NAME = NETA.MAPPLX1, TYPE = DIRECTORY ENTRY
IST1186I DIRECTORY ENTRY = REGISTERED LU
IST1184I CPNAME = NETA.SSCP1A - NETSRVR = NETA.SSCPAA
IST314I END
```

```
d net,id=mapplx1,e
IST097I DISPLAY ACCEPTED
IST075I NAME = NETA.MAPPLX1, TYPE = CDRSC
IST486I STATUS= ACT/S----Y, DESIRED STATE= ACTIV
IST1447I REGISTRATION TYPE = NO
IST977I MDLTAB=***NA*** ASLTAB=***NA***
IST1333I ADJLIST = ***NA***
IST861I MODETAB=***NA*** USSTAB=***NA*** LOGTAB=***NA***
IST934I DLOGMOD=***NA*** USS LANGTAB=***NA***
IST597I CAPABILITY-PLU ENABLED  ,SLU ENABLED  ,SESSION LIMIT NONE
IST231I CDRSC MAJOR NODE = ISTCDRDY
IST479I CDRM NAME = SSCPAA, VERIFY OWNER = NO
IST1184I CPNAME = NETA.SSCP2A - NETSRVR = ***NA***
IST082I DEVTYPE = INDEPENDENT LU / CDRSC
IST654I I/O TRACE = OFF, BUFFER TRACE = OFF
IST1500I STATE TRACE = OFF
IST228I ENCRYPTION = NONE, TYPE = DES
IST1563I CKEYNAME = MAPPLX1 CKEY = PRIMARY CERTIFY = NO
IST1552I MAC = NONE MACTYPE = NONE
IST171I ACTIVE SESSIONS = 0000000001, SESSION REQUESTS = 0000000000
IST206I SESSIONS:
IST1081I ADJACENT LINK STATION = CNR00005
IST634I NAME     STATUS         SID          SEND RECV VR TP NETID
IST635I APPLAA1  ACTIV-P    EAABEE185A59FD67 0000 0000  0  0 NETA
IST924I -------------------------------------------------------------
IST075I NAME = NETA.MAPPLX1, TYPE = APPL
IST1549I OWNER = NETA.SSCP2A MNPS STATE = ENABLED
IST924I -------------------------------------------------------------
IST075I NAME = NETA.MAPPLX1, TYPE = DIRECTORY ENTRY
IST1186I DIRECTORY ENTRY = DYNAMIC LU
IST1184I CPNAME = NETA.SSCP2A - NETSRVR = ***NA***
IST314I END
```

```
d net,id=mappl1,e
IST097I DISPLAY ACCEPTED
IST075I NAME = NETA.MAPPL1, TYPE = CDRSC
IST486I STATUS= ACT/S----Y, DESIRED STATE= ACTIV
IST1447I REGISTRATION TYPE = NO
IST977I MDLTAB=***NA*** ASLTAB=***NA***
IST1333I ADJLIST = ***NA***
IST861I MODETAB=***NA*** USSTAB=***NA*** LOGTAB=***NA***
IST934I DLOGMOD=***NA*** USS LANGTAB=***NA***
IST597I CAPABILITY-PLU ENABLED  ,SLU ENABLED  ,SESSION LIMIT NONE
IST231I CDRSC MAJOR NODE = ISTCDRDY
IST479I CDRM NAME = SSCP1A, VERIFY OWNER = NO
IST1184I CPNAME = NETA.SSCP2A - NETSRVR = ***NA***
IST082I DEVTYPE = INDEPENDENT LU / CDRSC
IST654I I/O TRACE = OFF, BUFFER TRACE = OFF
IST1500I STATE TRACE = OFF
IST228I ENCRYPTION = NONE, TYPE = DES
IST1563I CKEYNAME = MAPPL1 CKEY = PRIMARY CERTIFY = NO
IST1552I MAC = NONE MACTYPE = NONE
IST171I ACTIVE SESSIONS = 0000000001, SESSION REQUESTS = 0000000000
IST206I SESSIONS:
```

```
IST1081I ADJACENT LINK STATION = CNR00003
IST634I NAME     STATUS         SID          SEND RECV VR TP NETID
IST635I APPL1    ACTIV-P    EAABEEC30C061090 0000 0000  0  0 NETA
IST924I -------------------------------------------------------------
IST075I NAME = NETA.MAPPL1, TYPE = APPL
IST1549I OWNER = NETA.SSCP2A MNPS STATE = DISABLED
IST314I END
```

```
d net,id=mapplx1,e
IST097I DISPLAY ACCEPTED
IST075I NAME = NETA.MAPPLX1, TYPE = APPL
IST486I STATUS= CONCT, DESIRED STATE= CONCT
IST1447I REGISTRATION TYPE = CDSERVR
IST1550I MNPS STATE = DEFINED
IST977I MDLTAB=***NA*** ASLTAB=***NA***
IST861I MODETAB=***NA*** USSTAB=***NA*** LOGTAB=***NA***
IST934I DLOGMOD=***NA*** USS LANGTAB=***NA***
IST1632I VPACING =  7
IST597I CAPABILITY-PLU INHIBITED,SLU INHIBITED,SESSION LIMIT NONE
IST231I APPL MAJOR NODE = APPLMG2
IST654I I/O TRACE = OFF, BUFFER TRACE = OFF
IST1500I STATE TRACE = OFF
IST271I JOBNAME = ***NA***, STEPNAME = ***NA***, DSPNAME = ***NA***
IST228I ENCRYPTION = OPTIONAL, TYPE = DES
IST1563I CKEYNAME = MAPPLX1 CKEY = PRIMARY CERTIFY = NO
IST1552I MAC = NONE MACTYPE = NONE
IST1050I MAXIMUM COMPRESSION LEVEL - INPUT = 0, OUTPUT = 0
IST1633I ASRCVLM = 1000000
IST1634I DATA SPACE USAGE: CURRENT = ***NA*** MAXIMUM = ***NA***
IST171I ACTIVE SESSIONS = 0000000000, SESSION REQUESTS = 0000000000
IST172I NO SESSIONS EXIST
IST924I -------------------------------------------------------------
IST075I NAME = NETA.MAPPLX1, TYPE = APPL
IST1549I OWNER = NETA.SSCP1A MNPS STATE = DISABLED
IST314I END
```

Displaying a dynamic application program:

```
d net,id=appl1,scope=all
IST097I DISPLAY ACCEPTED
IST075I NAME = NETA.APPL1, TYPE = DYNAMIC APPL
IST486I STATUS= ACTIV, DESIRED STATE= ACTIV - TRACE= OFF
IST1447I REGISTRATION TYPE = CDSERVR
IST977I MDLTAB=***NA*** ASLTAB=***NA***
IST861I MODETAB=***NA*** USSTAB=***NA*** LOGTAB=***NA***
IST934I DLOGMOD=***NA*** USS LANGTAB=***NA***
IST1632I VPACING =  7
IST597I CAPABILITY-PLU ENABLED  ,SLU ENABLED  ,SESSION LIMIT NON
IST231I APPL MAJOR NODE = APPL1A
IST1425I DEFINED USING MODEL APPL*
IST654I I/O TRACE = OFF, BUFFER TRACE = OFF
IST1500I STATE TRACE = OFF
IST271I JOBNAME = ECHO, STEPNAME = ECHO, DSPNAME = IST75874
IST228I ENCRYPTION = OPTIONAL, TYPE = DES
IST1563I CKEYNAME = APPL1 CKEY = PRIMARY CERTIFY = NO
IST1552I MAC = NONE MACTYPE = NONE
IST1050I MAXIMUM COMPRESSION LEVEL - INPUT = 0, OUTPUT = 0
IST1633I ASRCVLM = 2000000
IST1634I DATA SPACE USAGE: CURRENT = 0 MAXIMUM = 0
IST171I ACTIVE SESSIONS = 0000000000, SESSION REQUESTS = 0000000
IST314I END
```

Displaying the application program representing the network operator:

```
d net,id=istnop
IST097I DISPLAY ACCEPTED
IST075I NAME = NETA.ISTNOP, TYPE = APPL
IST486I STATUS= ACTIV, DESIRED STATE= ACTIV - TRACE= OFF
```

```
IST1447I REGISTRATION TYPE = NO
IST977I MDLTAB=***NA*** ASLTAB=***NA***
IST1395I FLDTAB = ISTMSFLD FILTER = ISTMGC10
IST861I MODETAB=***NA*** USSTAB=***NA*** LOGTAB=***NA***
IST934I DLOGMOD=***NA*** USS LANGTAB=***NA***
IST597I CAPABILITY-PLU INHIBITED,SLU INHIBITED,SESSION LIMIT NONE
IST231I APPL MAJOR NODE = VTAMSEG
IST654I I/O TRACE = OFF, BUFFER TRACE = OFF
IST271I JOBNAME = ***NA***, STEPNAME = ***NA***, DSPNAME = ***NA***
IST228I ENCRYPTION = NONE, TYPE = DES
IST1563I CKEYNAME = ISTNOP CKEY = PRIMARY CERTIFY = NO
IST1552I MAC = NONE MACTYPE = NONE
IST1050I MAXIMUM COMPRESSION LEVEL - INPUT = 0, OUTPUT = 0
IST171I ACTIVE SESSIONS = 0000000000, SESSION REQUESTS = 0000000000
IST314I END
```

Displaying a dynamic same-network CDRSC:

```
d net,id=applaa3,scope=all
IST097I DISPLAY ACCEPTED
IST075I NAME = NETA.APPLAA3, TYPE = CDRSC
IST486I STATUS= ACTIV----Y, DESIRED STATE= ACTIV
IST1447I REGISTRATION TYPE = CDSERVR
IST977I MDLTAB=***NA*** ASLTAB=***NA***
IST1333I ADJLIST = ***NA***
IST861I MODETAB=***NA*** USSTAB=***NA*** LOGTAB=***NA***
IST934I DLOGMOD=***NA*** USS LANGTAB=***NA***
IST597I CAPABILITY-PLU ENABLED  ,SLU ENABLED  ,SESSION LIMIT NONE
IST231I CDRSC MAJOR NODE = ISTCDRDY
IST479I CDRM NAME = ***NA***, VERIFY OWNER = NO
IST1184I CPNAME = NETA.SSCPAA - NETSRVR = ***NA***
IST082I DEVTYPE = CDRSC
IST654I I/O TRACE = OFF, BUFFER TRACE = OFF
IST228I ENCRYPTION = NONE, TYPE = DES
IST1563I CKEYNAME = APPLAA3 CKEY = PRIMARY CERTIFY = NO
IST1552I MAC = NONE MACTYPE = NONE
IST171I ACTIVE SESSIONS = 0000000000, SESSION REQUESTS = 0000000000
IST314I END
```

Displaying a dynamic cross-network CDRSC:

```
d net,id=netb.applb11,scope=all
IST097I DISPLAY ACCEPTED
IST075I NAME = NETB.APPLB11, TYPE = CDRSC
IST486I STATUS= ACT/S----Y, DESIRED STATE= ACTIV
IST1447I REGISTRATION TYPE = CDSERVR
IST977I MDLTAB=***NA*** ASLTAB=***NA***
IST1333I ADJLIST = ***NA***
IST861I MODETAB=***NA*** USSTAB=***NA*** LOGTAB=***NA***
IST934I DLOGMOD=***NA*** USS LANGTAB=***NA***
IST597I CAPABILITY-PLU ENABLED  ,SLU ENABLED  ,SESSION LIMIT NONE
IST231I CDRSC MAJOR NODE = ISTCDRDY
IST479I CDRM NAME = SSCP7B, VERIFY OWNER = NO
IST1184I CPNAME = NETB.SSCP7B - NETSRVR = ***NA***
IST082I DEVTYPE = CDRSC
IST654I I/O TRACE = OFF, BUFFER TRACE = OFF
IST228I ENCRYPTION = NONE, TYPE = DES
IST1563I CKEYNAME = APPLB11 CKEY = PRIMARY CERTIFY = NO
IST1552I MAC = NONE MACTYPE = NONE
IST171I ACTIVE SESSIONS = 0000000002, SESSION REQUESTS = 0000000000
IST206I SESSIONS:
IST634I NAME     STATUS         SID          SEND RECV VR TP NETID
IST635I APPL1    ACTIV-S    C2BB19BC74339803 0016 0016  0  0 NETA
IST635I APPL1    ACTIV-P    EAABEEC34604F7E2 0009 000A  0  0 NETA
IST314I END
```

Displaying a predefined CDRSC for a specific network:

```
d net,id=applb11,netid=netb,scope=all
IST097I DISPLAY ACCEPTED
IST075I NAME = APPLB11, TYPE = CDRSC
IST486I STATUS= ACTIV, DESIRED STATE= ACTIV
IST1447I REGISTRATION TYPE = CDSERVR
IST977I MDLTAB=***NA*** ASLTAB=***NA***
IST1333I ADJLIST = ***NA***
IST861I MODETAB=***NA*** USSTAB=***NA*** LOGTAB=***NA***
IST934I DLOGMOD=***NA*** USS LANGTAB=***NA***
IST597I CAPABILITY-PLU ENABLED  ,SLU ENABLED  ,SESSION LIMIT NONE
IST231I CDRSC MAJOR NODE = CDRSC1A
IST479I CDRM NAME = SSCP7B, VERIFY OWNER = NO
IST082I DEVTYPE = CDRSC
IST654I I/O TRACE = OFF, BUFFER TRACE = OFF
IST228I ENCRYPTION = NONE, TYPE = DES
IST1563I CKEYNAME = APPLB11 CKEY = PRIMARY CERTIFY = NO
IST1552I MAC = NONE MACTYPE = NONE
IST171I ACTIVE SESSIONS = 0000000000, SESSION REQUESTS = 0000000000
IST314I END
```

Displaying a predefined CDRSC without network (no sessions):

```
d net,id=netappl2,scope=all
IST097I DISPLAY ACCEPTED
IST075I NAME = NETA.NETAPPL2, TYPE = CDRSC
IST486I STATUS= ACTIV, DESIRED STATE= ACTIV - TRACE= OFF
IST1447I REGISTRATION TYPE = NO
IST977I MDLTAB=***NA*** ASLTAB=***NA***
IST1333I ADJLIST = ***NA***
IST861I MODETAB=***NA*** USSTAB=***NA*** LOGTAB=***NA***
IST934I DLOGMOD=***NA*** USS LANGTAB=***NA***
IST597I CAPABILITY-PLU ENABLED  ,SLU ENABLED  ,SESSION LIMIT NONE
IST231I CDRSC MAJOR NODE = CDRSC1A
IST479I CDRM NAME = SSCP2A, VERIFY OWNER = NO
IST082I DEVTYPE = CDRSC
IST654I I/O TRACE = OFF, BUFFER TRACE = OFF
IST171I ACTIVE SESSIONS = 0000000000, SESSION REQUESTS = 0000000000
IST314I END
```

Displaying a CDRSC for a TN3270 or TN3270E client:

```
d net,id=tcpm1011,e
IST097I DISPLAY ACCEPTED
IST075I NAME = NETA.TCPM1011, TYPE = CDRSC 953
IST486I STATUS= ACT/S----Y, DESIRED STATE= ACTIV
IST1447I REGISTRATION TYPE = NO
IST977I MDLTAB=***NA*** ASLTAB=***NA***
IST1333I ADJLIST = ***NA***
IST861I MODETAB=***NA*** USSTAB=***NA*** LOGTAB=***NA***
IST934I DLOGMOD=***NA*** USS LANGTAB=***NA***
IST597I CAPABILITY-PLU ENABLED  ,SLU ENABLED  ,SESSION LIMIT NONE
IST231I CDRSC MAJOR NODE = ISTCDRDY
IST479I CDRM NAME = SSCP1A, VERIFY OWNER = NO
IST1184I CPNAME = NETA.SSCP1A - NETSRVR = ***NA***
IST082I DEVTYPE = CDRSC
IST654I I/O TRACE = OFF, BUFFER TRACE = OFF
IST1500I STATE TRACE = OFF
IST228I ENCRYPTION = NONE , TYPE = DES
IST1563I CKEYNAME = TCPM1011 CKEY = PRIMARY CERTIFY = NO
IST1552I MAC = NONE MACTYPE = NONE
IST1727I DNS NAME: VIC127.TCP.RALEIGH.IBM.COM
IST1669I IPADDR..PORT 9.67.113.83..1027
IST171I ACTIVE SESSIONS = 0000000001, SESSION REQUESTS = 0000000000
IST206I SESSIONS:
IST634I NAME     STATUS         SID          SEND RECV VR TP NETID
IST635I TSO20001 ACTIV-P    F6ABEEC39DE3E239 0008 0010  0  0 NETA
IST314I END
```

Displaying an independent logical unit:

```
d net,id=l3270a,scope=all
IST097I DISPLAY ACCEPTED
IST075I NAME = L3270A, TYPE = CDRSC
IST486I STATUS= ACTIV, DESIRED STATE= ACTIV
IST599I REAL NAME = ***NA***
IST1447I REGISTRATION TYPE = NO
IST977I MDLTAB=***NA*** ASLTAB=***NA***
IST1333I ADJLIST = ***NA***
IST861I MODETAB=***NA*** USSTAB=***NA*** LOGTAB=***NA***
IST934I DLOGMOD=***NA*** USS LANGTAB=***NA***
IST597I CAPABILITY-PLU ENABLED  ,SLU ENABLED  ,SESSION LIMIT NONE
IST231I CDRSC MAJOR NODE = ISTPDILU
IST1044I ALSLIST = AHHCPU1
IST082I DEVTYPE = INDEPENDENT LU / CDRSC
IST654I I/O TRACE = OFF, BUFFER TRACE = OFF
IST1500I STATE TRACE = OFF
IST228I ENCRYPTION = NONE, TYPE = DES
IST1563I CKEYNAME = L3270A CKEY = PRIMARY CERTIFY = NO
IST1552I MAC = NONE MACTYPE = NONE
IST171I ACTIVE SESSIONS = 0000000000, SESSION REQUESTS = 0000000000
IST172I NO SESSIONS EXIST
IST924I -------------------------------------------------------------
IST075I NAME = NETA.L3270A, TYPE = DIRECTORY ENTRY
IST1186I DIRECTORY ENTRY = REGISTERED LU
IST1184I CPNAME = NETA.SSCP2A - NETSRVR = NETA.SSCP1A
IST484I SUBAREA = ****NA****
IST1703I DESIRED LOCATE SIZE = 1K LAST LOCATE SIZE = 1K
IST314I END
```

Displaying the host CDRM:

```
d net,id=a01n,scope=all
IST097I DISPLAY ACCEPTED
IST075I NAME = NETA.A01N, TYPE = CDRM
IST1046I CP NETA.A01N ALSO EXISTS
IST486I STATUS= ACTIV     , DESIRED STATE= ACTIV
IST815I AUTOMATIC RECOVERY IS SUPPORTED
IST231I CDRM  MAJOR NODE = VTAMSEG
IST654I I/O TRACE = OFF, BUFFER TRACE = OFF
IST476I CDRM TYPE = HOST, GATEWAY CAPABLE
IST637I SUBAREA= 2   ELEMENT= 1 SSCPID = 2
IST388I DYNAMIC CDRSC DEFINITION SUPPORT = YES
IST171I ACTIVE SESSIONS = 0000000000, SESSION REQUESTS = 0000000000
IST172I NO SESSIONS EXIST
IST924I -------------------------------------------------------------
IST075I NAME = NETA.A01N, TYPE = HOST CP
IST1046I SSCP NETA.A01N ALSO EXISTS
IST486I STATUS= ACT/S     , DESIRED STATE= ACTIV
IST977I MDLTAB=***NA*** ASLTAB=***NA***
IST861I MODETAB=***NA*** USSTAB=***NA*** LOGTAB=***NA***
IST934I DLOGMOD=***NA*** USS LANGTAB=***NA***
IST597I CAPABILITY-PLU ENABLED  ,SLU ENABLED  ,SESSION LIMIT NONE
IST231I APPL  MAJOR NODE = VTAMSEG
IST654I I/O TRACE = OFF, BUFFER TRACE = OFF
IST271I JOBNAME = NET41B  , STEPNAME = NET     , DSPNAME = 00000IST
IST1050I MAXIMUM COMPRESSION LEVEL - INPUT = 0, OUTPUT = 0
IST171I ACTIVE SESSIONS = 0000000014, SESSION REQUESTS = 0000000000
IST206I SESSIONS:
IST634I NAME     STATUS         SID          SEND RECV VR TP NETID
IST635I A04P882A ACTIV/CP-S E7F3895623BE5C86 000D 0001  0  0 NETY
IST635I A04P888A ACTIV/CP-S E7F3895623BE5C85 053E 0001  0  0 NETA
IST635I A04P886A ACTIV/CP-S E7F3895623BE5C84 0721 0001  0  0 NETA
IST635I A04P885A ACTIV/CP-S E7F3895623BE5C83 03AE 0001  0  0 NETA
IST635I A04P889A ACTIV/CP-S E7F3895623BE5C82 0727 0001  0  0 NETA
IST635I A04P883A ACTIV/CP-S E7F3895623BE5C81 01C5 0001  0  0 NETZ
IST635I A02N     ACTIV/CP-S E7F3895623BE56A5 1055 0001  0  0 NETA
```

```
IST635I A02N     ACTIV/CP-P E7E3F9563F1747D7 0001 1047  0  0 NETA
IST635I A04P882A ACTIV/CP-P F3342BAB9019C2B2 0001 000E  0  0 NETY
IST635I A04P883A ACTIV/CP-P E36D478882B602AB 0001 01C6  0  0 NETZ
IST635I A04P885A ACTIV/CP-P EF0E04F6C768DD2E 0001 03AF  0  0 NETA
IST635I A04P886A ACTIV/CP-P EF0E07F6C768E02F 0001 0722  0  0 NETA
IST635I A04P888A ACTIV/CP-P EF0E09F6C768E230 0001 053F  0  0 NETA
IST635I A04P889A ACTIV/CP-P EF0E08F6C768E131 0001 0728  0  0 NETA
IST314I END
```

Displaying an active, same-network, external CDRM:

```
d net,id=A02n,scope=all
IST097I DISPLAY ACCEPTED
IST075I NAME = NETA.A02N, TYPE = CDRM
IST1046I CP NETA.A02N ALSO EXISTS
IST486I STATUS= ACTIV, DESIRED STATE= ACTIV
IST815I AUTOMATIC RECOVERY IS SUPPORTED
IST231I CDRM  MAJOR NODE = A01CDRMC
IST654I I/O TRACE = OFF, BUFFER TRACE = OFF
IST1500I STATE TRACE = OFF
IST476I CDRM TYPE = EXTERNAL
IST637I SUBAREA= 2   ELEMENT= 1 SSCPID = 2
IST675I VR=0, TP=0
IST389I PREDEFINITION OF CDRSC = OPT
IST1105I RESOURCE STATUS TGN CP-CP TG CHARACTERISTICS
IST1106I A02N     AC/R   255 YES   982D0000000000000000017100808080
IST1482I HPR= NO - OVERRIDE = YES - CONNECTION = YES
IST636I CDRSCS OWNED BY A02N     -
IST172I NO CDRSCS EXIST
IST924I -------------------------------------------------------------
IST075I NAME = NETA.A02N, TYPE = ADJACENT CP
IST1046I SSCP NETA.A02N ALSO EXISTS
IST486I STATUS= ACT/S----Y, DESIRED STATE= ACTIV
IST977I MDLTAB=***NA*** ASLTAB=***NA***
IST861I MODETAB=***NA*** USSTAB=***NA*** LOGTAB=***NA***
IST934I DLOGMOD=***NA*** USS LANGTAB=***NA***
IST597I CAPABILITY-PLU ENABLED  ,SLU ENABLED  ,SESSION LIMIT NONE
IST231I CDRSC MAJOR NODE = ISTCDRDY
IST479I CDRM NAME = A01N    , VERIFY OWNER = NO
IST1044I ALSLIST = ISTAPNPU
IST082I DEVTYPE = INDEPENDENT LU / CDRSC
IST654I I/O TRACE = OFF, BUFFER TRACE = OFF
IST171I ACTIVE SESSIONS = 0000000002, SESSION REQUESTS = 0000000000
IST206I SESSIONS:
IST1081I ADJACENT LINK STATION = A02NETNA
IST634I NAME     STATUS         SID          SEND RECV VR TP NETID
IST635I A01N     ACTIV/CP-S E7E3F9563F1747D7 1055 0001  0  0 NETA
IST635I A01N     ACTIV/CP-P E7F3895623BE56A5 0001 105F  0  0 NETA
IST924I -------------------------------------------------------------
IST075I NAME = NETA.A02N, TYPE = DIRECTORY ENTRY
IST1186I DIRECTORY ENTRY = DYNAMIC NN
IST1184I CPNAME = NETA.A02N     - NETSRVR = ***NA***
IST314I END
```

Displaying a cross-network external CDRM:

```
d net,id=c01n,scope=all
IST097I DISPLAY ACCEPTED
IST075I NAME = NETC.C01N, TYPE = CDRM
IST486I STATUS= ACTIV     , DESIRED STATE= ACTIV
IST815I AUTOMATIC RECOVERY IS SUPPORTED
IST231I CDRM  MAJOR NODE = A50CDRMC
IST654I I/O TRACE = OFF, BUFFER TRACE = OFF
IST476I CDRM TYPE = EXTERNAL
IST637I SUBAREA= 2   ELEMENT= 1 SSCPID = 2
IST675I VR = 0, TP = 2
IST638I ADJNETSA = 1, ADJNETEL = 1
IST675I VR = 0, TP = 2
```

```
IST639I GWN = A0362ZC , ADJNET = NETC
IST640I A500N    ADDR IN ADJNET - SA =         31, EL =    11
IST641I GATEWAY PATH SELECTION LIST -
IST642I  ADJNET     GWN        SUBAREA   ELEM    ADJNETSA  ADJNETEL
IST643I NETC      A0362ZC            3      1           1         1
IST643I NETC                       255      3           1         1
IST898I GWSELECT = YES
IST389I PREDEFINITION OF CDRSC = OPT
IST636I CDRSCS OWNED BY C01N     -
IST080I C01NVLUC ACT/S----Y
IST924I -------------------------------------------------------------
IST075I NAME = NETC.C01N, TYPE = DIRECTORY ENTRY
IST1186I DIRECTORY ENTRY = DYNAMIC EN
IST1184I CPNAME = NETC.C01N     - NETSRVR = NETA.A01N
IST314I END
```

Displaying a peripheral BSC line group:

```
d net,id=a03lbnnb,scope=all
IST097I DISPLAY  ACCEPTED
IST075I NAME = A03LBNNB         , TYPE = LINE GROUP
IST486I STATUS= ACTIV     , DESIRED STATE= ACTIV
IST354I PU T4/5 MAJOR NODE = A0362ZC
IST084I NETWORK NODES:
IST089I A03B00   TYPE = LINE             , NEVAC
IST089I A03C001  TYPE = PU_T2            , NEVAC
IST089I A03C002  TYPE = PU_T2            , NEVAC
IST089I A03B01   TYPE = LINE             , NEVAC
IST089I A03C011  TYPE = PU_T2            , NEVAC
IST089I A03C012  TYPE = PU_T2            , NEVAC
IST089I A03B32   TYPE = LINE             , NEVAC
IST089I A03C321  TYPE = PU_T2            , NEVAC
IST089I A03C322  TYPE = PU_T2            , NEVAC
IST089I A03B33   TYPE = LINE             , NEVAC
IST089I A03C331  TYPE = PU_T2            , NEVAC
IST089I A03C332  TYPE = PU_T2            , NEVAC
IST314I END
```

Displaying a peripheral SDLC line group:

```
d net,id=a03lbnns,scope=all
IST097I DISPLAY  ACCEPTED
IST075I NAME = A03LBNNS         , TYPE = LINE GROUP
IST486I STATUS= ACTIV      , DESIRED STATE= ACTIV
IST354I PU T4/5 MAJOR NODE = A0362ZC
IST084I NETWORK NODES:
IST089I A03S16   TYPE = LINE             , ACTIV
IST089I A03P161  TYPE = PU_T2            , PREQC
IST089I A03P162  TYPE = PU_T2            , PREQC
IST089I A03P163  TYPE = PU_T2            , PREQC
IST089I A03P164  TYPE = PU_T2            , PREQC
IST089I A03S20   TYPE = LINE             , ACTIV
IST075I NAME = A03LBNNS         , TYPE = LINE GROUP
IST089I A03P201  TYPE = PU_T2            , PREQC
IST089I A03P202  TYPE = PU_T2            , PREQC
IST089I A03P203  TYPE = PU_T2            , PREQC
IST089I A03P204  TYPE = PU_T2            , PREQC
IST089I A03P205  TYPE = PU_T2            , PREQC
IST089I A03P206  TYPE = PU_T2            , PREQC
IST314I END
```

Displaying a peripheral SDLC switched line group:

```
d net,id=grp3a9,scope=all
IST097I DISPLAY ACCEPTED
IST075I NAME = GRP3A9, TYPE = LINE GROUP
IST486I STATUS= ACTIV      , DESIRED STATE= ACTIV
IST354I PU T4/5 MAJOR NODE = NCP3AB5
```

```
IST084I NETWORK NODES:
IST089I LN3A9    TYPE = LINE             , ACTIV
IST089I P3A4956K TYPE = PU_T2            , ACTIV--L--
IST089I L3A4956A TYPE = LOGICAL UNIT     , ACT/S
IST089I LN3A10   TYPE = LINE             , ACTIV
IST089I P3A4956L TYPE = PU_T2            , ACTIV--L--
IST089I L3A4956A TYPE = LOGICAL UNIT     , ACT/S
IST089I LN3A11   TYPE = LINE             , ACTIV
IST089I P3A4956M TYPE = PU_T2            , NEVAC
IST314I END
```

Note: Independent LU L3A4956A is shown under two PUs because it has active sessions through these PUs.

Displaying a peripheral BSC link:

```
d net,id=a03b00,scope=all
IST097I DISPLAY  ACCEPTED
IST075I NAME = A03B00           , TYPE = LINE
IST486I STATUS= NEVAC      , DESIRED STATE= INACT
IST087I TYPE = LEASED             , CONTROL = BSC , HPDT = *NA*
IST134I GROUP = A03LBNNB, MAJOR NODE = A0362ZC
IST650I POLL = 000, NEGPOLL = 010, SESSION(S) = 032
IST084I NETWORK NODES:
IST089I A03C001  TYPE = PU_T2            , NEVAC
IST089I A03T0011 TYPE = LOGICAL UNIT     , NEVAC
IST089I A03T0012 TYPE = LOGICAL UNIT     , NEVAC
IST089I A03T0013 TYPE = LOGICAL UNIT     , NEVAC
IST089I A03T0014 TYPE = LOGICAL UNIT     , NEVAC
IST089I A03T0015 TYPE = LOGICAL UNIT     , NEVAC
IST089I A03T0016 TYPE = LOGICAL UNIT     , NEVAC
IST089I A03T0017 TYPE = LOGICAL UNIT     , NEVAC
IST089I A03T0018 TYPE = LOGICAL UNIT     , NEVAC
IST089I A03T0019 TYPE = LOGICAL UNIT     , NEVAC
IST089I A03T001A TYPE = LOGICAL UNIT     , NEVAC
IST089I A03T001B TYPE = LOGICAL UNIT     , NEVAC
IST089I A03T001C TYPE = LOGICAL UNIT     , NEVAC
IST089I A03T001D TYPE = LOGICAL UNIT     , NEVAC
IST089I A03T001E TYPE = LOGICAL UNIT     , NEVAC
IST089I A03T001F TYPE = LOGICAL UNIT     , NEVAC
IST089I A03C002  TYPE = PU_T2            , NEVAC
IST089I A03T0021 TYPE = LOGICAL UNIT     , NEVAC
IST089I A03T0022 TYPE = LOGICAL UNIT     , NEVAC
IST089I A03T0023 TYPE = LOGICAL UNIT     , NEVAC
IST089I A03T0024 TYPE = LOGICAL UNIT     , NEVAC
IST089I A03T0025 TYPE = LOGICAL UNIT     , NEVAC
IST089I A03T0026 TYPE = LOGICAL UNIT     , NEVAC
IST089I A03T0027 TYPE = LOGICAL UNIT     , NEVAC
IST089I A03T0028 TYPE = LOGICAL UNIT     , NEVAC
IST089I A03T0029 TYPE = LOGICAL UNIT     , NEVAC
IST089I A03T002A TYPE = LOGICAL UNIT     , NEVAC
IST089I A03T002B TYPE = LOGICAL UNIT     , NEVAC
IST089I A03T002C TYPE = LOGICAL UNIT     , NEVAC
IST089I A03T002D TYPE = LOGICAL UNIT     , NEVAC
IST089I A03T002E TYPE = LOGICAL UNIT     , NEVAC
IST089I A03T002F TYPE = LOGICAL UNIT     , NEVAC
IST314I END
```

Displaying an SDLC link (multidrop INN):

```
d net,id=a04in01,scope=all
IST097I DISPLAY ACCEPTED
IST075I NAME = A04IN01, TYPE = LINE
IST486I STATUS= ACTIV----E , DESIRED STATE = ACTIV
IST087I TYPE = LEASED             , CONTROL = SDLC, HPDT = *NA*
IST134I GROUP = A04MPRI,  MAJOR NODE = A04N43A
IST084I NETWORK NODES:
```

```
IST089I A04P013  TYPE = PU_T2            , NEVAC
IST089I A04L013A TYPE = LOGICAL UNIT     , NEVAC
IST089I A04L013B TYPE = LOGICAL UNIT     , NEVAC
IST089I A04L013C TYPE = LOGICAL UNIT     , NEVAC
IST089I A04L013D TYPE = LOGICAL UNIT     , NEVAC
IST089I A04L013E TYPE = LOGICAL UNIT     , NEVAC
IST089I A04L013F TYPE = LOGICAL UNIT     , NEVAC
IST089I A04L013G TYPE = LOGICAL UNIT     , NEVAC
IST089I A04L013H TYPE = LOGICAL UNIT     , NEVAC
IST089I A04L013I TYPE = LOGICAL UNIT     , NEVAC
IST089I A04L013J TYPE = LOGICAL UNIT     , NEVAC
IST089I A04L013K TYPE = LOGICAL UNIT     , NEVAC
IST089I A04L013L TYPE = LOGICAL UNIT     , NEVAC
IST089I A04L013M TYPE = LOGICAL UNIT     , NEVAC
IST089I A04L013N TYPE = LOGICAL UNIT     , NEVAC
IST089I A04L013O TYPE = LOGICAL UNIT     , NEVAC
IST089I A04I013A TYPE = LOGICAL UNIT     , NEVAC
IST089I A04I013B TYPE = LOGICAL UNIT     , NEVAC
IST089I A04I013C TYPE = LOGICAL UNIT     , NEVAC
IST089I A04I013D TYPE = LOGICAL UNIT     , NEVAC
IST089I A04I013E TYPE = LOGICAL UNIT     , NEVAC
IST396I LNKSTA    STATUS     CTG GTG ADJNODE  ADJSA  NETID  ADJLS
IST397I A04P014   NEVAC        2   2              0
IST397I A04P015   NEVAC        2   2              0
IST397I A04P016   NEVAC        2   2              0
IST397I A04P017   ACTIV----E   2   2 A31N52B     31
IST397I A04P018   ACTIV----E   2   2 A71N43A     71
IST397I A04P019   NEVAC        2   2              0
IST397I A04P01A   NEVAC        2   2              0
IST397I A04P01B   NEVAC        2   2              0
IST397I A04P01C   NEVAC        2   2              0
IST314I END
```

Displaying a peripheral SDLC link:

```
d net,id=ln3atr10,scope=all
IST097I DISPLAY ACCEPTED
IST075I NAME = LN3ATR10, TYPE = LINE
IST486I STATUS= ACTIV      , DESIRED STATE= ACTIV
IST087I TYPE = LEASED             , CONTROL = SDLC, HPDT = *NA*
IST1440I USE = NCP, SPARE RESOURCE, CAN BE REDEFINED
IST134I GROUP = GP3ATRP1, MAJOR NODE = NCP3AB7
IST1324I VNNAME =  NETA.VN1           VNGROUP = GP3ATR10
IST1105I RESOURCE STATUS TGN CP-CP TG CHARACTERISTICS
IST1106I LN3ATR10 AC/R    21 NO    907500000000000000000017100808080
IST084I NETWORK NODES:
IST089I P3ATR10  TYPE = PU_T2            , ACTIV
IST314I END
```

Displaying a cross-subarea SDLC switched link:

```
d net,id=a04hdx00,scope=all
IST097I DISPLAY ACCEPTED
IST075I NAME = A04HDX00, TYPE = LINE
IST486I STATUS= ACTIV      , DESIRED STATE = ACTIV
IST087I TYPE = SWITCHED DIAL-INOUT, CONTROL = SDLC, HPDT = *NA*
IST936I ANSWER MODE = ENABLED
IST134I GROUP = A04SADG1, MAJOR NODE = A04S43A
IST084I NETWORK NODES:
IST089I A31A     TYPE = LINK STATION     , ACTIV
IST314I END
```

Displaying a peripheral SDLC switched link:

```
d net,id=j0004001,scope=all
IST097I DISPLAY ACCEPTED
IST075I NAME =J00004001, TYPE = LINE
IST486I STATUS= ACTIV      , DESIRED STATE = ACTIV
```

```
IST087I TYPE = SWITCHED DIAL-INOUT, CONTROL = SDLC, HPDT = *NA*
IST936I ANSWER MODE = ENABLED
IST134I GROUP = A04TRLG1, MAJOR NODE = A04S43A
IST1656I VTAMTOPO = REPORT, NODE REPORTED - YES
IST172I NO NETWORK NODES EXIST
IST314I END
```

Displaying an NTRI line in an NCP:

```
d net,id=ln3atr11
IST097I DISPLAY ACCEPTED
IST075I NAME = LN3ATR11, TYPE = LINE
IST486I STATUS= ACTIV, DESIRED STATE= ACTIV
IST087I TYPE = SWITCHED DIAL-INOUT, CONTROL = SDLC, HPDT = *NA*
IST936I ANSWER MODE = ENABLED
IST1440I USE = NCP, DEFINED RESOURCE, CANNOT BE REDEFINED
IST134I GROUP = GP3ATR10, MAJOR NODE = NCP3AB8
IST1500I STATE TRACE = OFF
IST1656I VTAMTOPO = REPORT, NODE REPORTED - NO
IST1657I MAJOR NODE VTAMTOPO = IGNORE
IST314I END
```

Displaying a logical line in an XCA major node:

```
d net,id=ln1a2a
IST097I DISPLAY ACCEPTED
IST075I NAME = LN1A2A, TYPE = LINE
IST486I STATUS= NEVAC, DESIRED STATE= INACT
IST087I TYPE = SWITCHED DIAL-INOUT, CONTROL = SDLC, HPDT = *NA*
IST936I ANSWER MODE = RESET
IST134I GROUP = GP1A2A, MAJOR NODE = XCA1A
IST1500I STATE TRACE = OFF
IST1656I VTAMTOPO = REPORT, NODE REPORTED - YES
IST1657I MAJOR NODE VTAMTOPO = REPORT
IST314I END
```

Displaying XCF TRLE:

```
d net,id=istt1q2q,e
IST097I DISPLAY ACCEPTED
IST075I NAME = ISTT1Q2Q, TYPE = TRLE
IST486I STATUS= ACTIV, DESIRED STATE= ACTIV
IST087I TYPE = LEASED             , CONTROL = XCF , HPDT = *NA*
IST1715I MPCLEVEL = HPDT       MPCUSAGE = SHARE
IST1717I ULPID = ISTP1Q2Q
IST1503I XCF TOKEN = 0200001900120002     STATUS = ACTIVE
IST1502I ADJACENT CP = NETA.SSCP2A
IST1500I STATE TRACE = OFF
IST314I END
```

Displaying TCP TRLE:

```
d net,id=iutx0aa0
IST097I DISPLAY ACCEPTED
IST075I NAME = IUTX0AA0, TYPE = TRLE
IST486I STATUS= ACTIV, DESIRED STATE= ACTIV
IST087I TYPE = LEASED             , CONTROL = TCP , HPDT = *NA*
IST1717I ULPID = TCPCS
IST1221I READ  DEV = 0AA0 STATUS = ACTIVE     STATE = N/A
IST1221I WRITE DEV = 0AA1 STATUS = ACTIVE     STATE = N/A
IST1500I STATE TRACE = OFF
IST314I END
```

Displaying a switched major node:

```
d net,id=swxca1a,e
IST097I DISPLAY ACCEPTED
IST075I NAME = SWXCA1A, TYPE = SW SNA MAJ NODE
```

```
IST486I STATUS= ACTIV, DESIRED STATE= ACTIV
IST1656I VTAMTOPO = REPORT, NODE REPORTED - YES
IST084I NETWORK RESOURCES:
IST089I SW1A2A   TYPE = PU_T2            , CONCT
IST089I SW1A7B   TYPE = PU_T2            , CONCT
IST089I SW1A9C   TYPE = PU_T2            , CONCT
IST089I SW1AAA   TYPE = PU_T2            , CONCT
IST089I SW1ABA   TYPE = PU_T2            , CONCT
IST089I SW1ACA   TYPE = PU_T2            , CONCT
IST089I SW1ADA   TYPE = PU_T2            , CONCT
IST089I SW1AEA   TYPE = PU_T2            , CONCT
IST1500I STATE TRACE = OFF
IST314I END
```

Displaying a switched PU in this Switched major node:

```
d net,id=sw1a2a
IST097I DISPLAY ACCEPTED
IST075I NAME = SW1A2A, TYPE = PU_T2
IST486I STATUS= CONCT, DESIRED STATE= CONCT
IST1043I CP NAME = SSCP2A, CP NETID = NETA, DYNAMIC LU = YES
IST1589I XNETALS = YES
IST136I SWITCHED SNA MAJOR NODE = SWXCA1A
IST654I I/O TRACE = OFF, BUFFER TRACE = OFF
IST1500I STATE TRACE = OFF
IST1656I VTAMTOPO = NOREPORT, NODE REPORTED - YES
IST1657I MAJOR NODE VTAMTOPO = INCLUDE
IST314I END
```

Displaying a cross-subarea SDLC link:

```
d net,id=a04c08,scope=all
IST097I DISPLAY ACCEPTED
IST075I NAME = A04C08, TYPE = LINE
IST486I STATUS= NEVAC      , DESIRED STATE= INACT
IST087I TYPE = LEASED             , CONTROL = SDLC, HPDT = *NA*
IST134I GROUP = A04XCA0,  MAJOR NODE = A0462ZC
IST396I LNKSTA    STATUS     CTG GTG ADJNODE  ADJSA  NETID  ADJLS
IST397I A04P08A   NEVAC        1   1              0
IST314I END
```

Displaying a cross-subarea channel link:

```
d net,id=012-l,scope=all
IST097I DISPLAY ACCEPTED
IST075I NAME = 012-L, TYPE = LINE
IST486I STATUS= ACTIV----I , DESIRED STATE = ACTIV
IST087I TYPE = LEASED             , CONTROL = NCP , HPDT = *NA*
IST134I GROUP = ISTGROUP, MAJOR NODE = A99MPU
IST396I LNKSTA    STATUS     CTG GTG ADJNODE  ADJSA  NETID  ADJLS
IST397I 012-S     ACTIV----I   1   1 A03N43A      3
IST314I END
```

Displaying a cross-subarea channel link station:

```
d net,id=012-s,scope=all
IST097I DISPLAY ACCEPTED
IST075I NAME = 012-S, TYPE = LINK STATION
IST486I STATUS= ACTIV----I , DESIRED STATE = ACTIV
IST081I LINE NAME = 012-L, LINE GROUP = ISTGROUP, MAJNOD = A99MPU
IST396I LNKSTA    STATUS     CTG GTG ADJNODE  ADJSA  NETID  ADJLS
IST397I 012-S     ACTIV----I   1   1 A03N43A      3
IST610I                           LINE 012-L    - STATUS ACTIV----I
IST314I END
```

Displaying a cross-subarea SDLC link station:

```
d net,id=a03p644,scope=all
IST097I DISPLAY ACCEPTED
IST075I NAME = A03P644, TYPE = LINK STATION
IST486I STATUS= NEVAC      , DESIRED STATE = INACT
IST081I LINE NAME = A03IN64, LINE GROUP = A03MPRI, MAJNOD = A03N43A
IST396I LNKSTA    STATUS     CTG GTG ADJNODE  ADJSA  NETID  ADJLS
IST397I A03P644   NEVAC        2   2              0
IST610I                           LINE A03IN64  - STATUS NEVAC
IST314I END
```

Displaying a physical unit:

```
d net,id=a03p011,scope=all
IST097I DISPLAY ACCEPTED
IST075I NAME = A03P011, TYPE = PU_T2.1
IST486I STATUS= ACTIV      , DESIRED STATE = ACTIV
IST081I LINE NAME = A03IN01, LINE GROUP = A03MPRI, MAJNOD = A03N43A
IST654I I/O TRACE = OFF, BUFFER TRACE = OFF
IST355I LOGICAL UNITS:
IST080I A03L011A NEVAC      A03L011B NEVAC      A03L011C NEVAC
IST080I A03L011D NEVAC      A03L011E NEVAC      A03L011F NEVAC
IST080I A03L011G NEVAC      A03L011H NEVAC      A03L011I NEVAC
IST080I A03L011J NEVAC      A03L011K NEVAC      A03L011L NEVAC
IST080I A03L011M NEVAC      A03L011N NEVAC      A03L011O NEVAC
IST314I END
```

Displaying a physical unit with APPN host-to-host connectivity:

```
d net,id=ahhcpu1
IST097I DISPLAY ACCEPTED
IST075I NAME = AHHCPU1, TYPE = PU_T2.1 388
IST486I STATUS= ACTIV, DESIRED STATE= ACTIV
IST1043I CP NAME = SSCP2A, CP NETID = NETA, DYNAMIC LU = YES
IST1589I XNETALS = YES
IST1105I RESOURCE STATUS TGN CP-CP TG CHARACTERISTICS
IST1106I AHHCPU1  AC/R    21 YES   988D000000000000000014C00808080
IST1482I HPR = RTP - OVERRIDE = N/A - CONNECTION = YES
IST1510I LLERP = REQUIRED - RECEIVED = REQUIRED
IST136I LOCAL SNA MAJOR NODE = LSAHHC1
IST654I I/O TRACE = OFF, BUFFER TRACE = OFF
IST1500I STATE TRACE = OFF
IST1314I TRLE = TRLE1A    STATUS = ACTIV       CONTROL = MPC
IST314I END
```

Displaying a physical unit with DLUR support:

```
d net,id=aa1pua,scope=all
IST097I DISPLAY ACCEPTED
IST075I NAME = AA1PUA, TYPE = PU_T2
IST486I STATUS= ACTIV      , DESIRED STATE= ACTIV
IST1043I CP NAME = ***NA***, CP NETID = NETA, DYNAMIC LU = YES
IST1354I DLUR NAME = NNCPA1             MAJNODE = SWDLR1A
IST136I SWITCHED SNA MAJOR NODE = SWDLR1A
IST654I I/O TRACE = OFF, BUFFER TRACE = OFF
IST355I LOGICAL UNITS:
IST080I AA1LUA1  ACT/S      AA1LUA2  ACTIV      AA1LUA3  ACTIV
IST080I AA1LUA4  ACTIV
IST314I END
```

Displaying a rapid transport protocol (RTP) physical unit:

```
d net,id=cnr00004
IST097I DISPLAY ACCEPTED
IST075I NAME = CNR00004, TYPE = PU_T2.1
IST1392I DISCNTIM = 00010 DEFINED AT PU FOR DISCONNECT
IST486I STATUS= ACTIV--LX-, DESIRED STATE= ACTIV
IST1043I CP NAME = SSCP2A, CP NETID = NETA, DYNAMIC LU = YES
IST1589I XNETALS = YES
```

```
IST875I APPNCOS TOWARDS RTP = #INTER
IST1476I TCID X'1239C4D900000014' - REMOTE TCID X'1239D9D700000016'
IST1481I DESTINATION CP NETA.SSCP2A - NCE X'D000000000000000'
IST1587I ORIGIN NCE X'D000000000000000'
IST1477I ALLOWED DATA FLOW RATE = 355 KBITS/SEC
IST1516I INITIAL DATA FLOW RATE = 1600 KBITS/SEC
IST1841I ACTUAL DATA FLOW RATE = 85 KBITS/SEC
IST1511I MAXIMUM NETWORK LAYER PACKET SIZE = 16410 BYTES
IST1478I NUMBER OF UNACKNOWLEDGED BUFFERS = 0
IST1479I RTP CONNECTION STATE = CONNECTED - MNPS = NO
IST1855I NUMBER OF SESSIONS USING RTP = 372
IST1697I RTP PACING ALGORITHM = ARB RESPONSIVE MODE
IST1480I RTP END TO END ROUTE - RSCV PATH
IST1460I TGN  CPNAME            TG TYPE      HPR
IST1461I  21  NETA.SSCP2A       APPN         RTP
IST875I ALSNAME TOWARDS RTP = AHHCPU1
IST1738I ANR LABEL              TP           ER NUMBER
IST1739I 8001000A00000000       *NA*         *NA*
IST231I RTP MAJOR NODE = ISTRTPMN
IST654I I/O TRACE = OFF, BUFFER TRACE = OFF
IST1500I STATE TRACE = ON, OPTION = PU
IST314I END
```

Displaying a rapid transport protocol (RTP) physical unit with additional diagnostic information:

```
d net,id=cnr00004,hprdiag=yes
IST097I DISPLAY ACCEPTED
IST075I NAME = CNR00004, TYPE = PU_T2.1
IST1392I DISCNTIM = 00010 DEFINED AT PU FOR DISCONNECT
IST486I STATUS= ACTIV--LX-, DESIRED STATE= ACTIV
IST1043I CP NAME = SSCP2A, CP NETID = NETA, DYNAMIC LU = YES
IST1589I XNETALS = YES
IST875I APPNCOS TOWARDS RTP = #INTER
IST1476I TCID X'1239C4D900000014' - REMOTE TCID X'1239D9D700000016'
IST1481I DESTINATION CP NETA.SSCP2A - NCE X'D000000000000000'
IST1587I ORIGIN NCE X'D000000000000000'
IST1477I ALLOWED DATA FLOW RATE = 355 KBITS/SEC
IST1516I INITIAL DATA FLOW RATE = 1600 KBITS/SEC
IST1841I ACTUAL DATA FLOW RATE = 85 KBITS/SEC
IST1511I MAXIMUM NETWORK LAYER PACKET SIZE = 16410 BYTES
IST1478I NUMBER OF UNACKNOWLEDGED BUFFERS = 1
IST1479I RTP CONNECTION STATE = CONNECTED - MNPS = NO
IST1855I NUMBER OF SESSIONS USING RTP = 372
IST1697I RTP PACING ALGORITHM = ARB RESPONSIVE MODE
IST1480I RTP END TO END ROUTE - RSCV PATH
IST1460I TGN  CPNAME            TG TYPE      HPR
IST1461I  21  NETA.SSCP2A       APPN         RTP
IST875I ALSNAME TOWARDS RTP = AHHCPU1
IST1738I ANR LABEL              TP           ER NUMBER
IST1739I 8001000A00000000       *NA*         *NA*
IST1860I NUMBER OF NLPS SENT = 32705 - OVERFLOW = 0
IST1861I NUMBER OF NLPS RECEIVED = 34969 - OVERFLOW = 0
IST1842I NUMBER OF NLPS RETRANSMITTED = 0
IST1843I NUMBER OF NLPS ON WAITING-TO-SEND QUEUE = 0
IST1847I NUMBER OF NLPS ON WAITING-FOR-ACKNOWLEDGEMENT QUEUE = 1
IST1862I ARB MAXIMUM SEND RATE = 32000 KBITS/SEC
IST1844I ARB MODE = GREEN
IST1846I CURRENT RECEIVER THRESHOLD = 36889 MICROSECONDS
IST1846I MAXIMUM RECEIVER THRESHOLD = 37000 MICROSECONDS
IST1846I MINIMUM RECEIVER THRESHOLD = 17000 MICROSECONDS
IST1848I SEND BYTE COUNT = 1614772 RECEIVE BYTE COUNT = 1643299
IST1849I LARGEST NLP SENT = 140 BYTES
IST1850I LARGEST NLP RECEIVED = 104 BYTES
IST1851I SMOOTHED ROUND TRIP TIME = 13 MILLISECONDS
IST1852I LIVENESS TIMER = 163 SECONDS
IST1853I NUMBER OF NLPS ON OUT-OF-SEQUENCE QUEUE = 1
```

```
IST1854I NUMBER OF NLPS ON INBOUND SEGMENTS QUEUE = 1
IST1855I NUMBER OF SESSIONS USING RTP = 372
IST1856I LAST PATH SWITCH OCCURRENCE WAS ON 05/03/02 AT 08:48:01
IST1818I PATH SWITCH REASON: SHORT REQUEST RETRY LIMIT EXHAUSTED
IST924I -------------------------------------------------------------
IST1857I BACKPRESSURE REASON COUNTS:
IST1858I PATHSWITCH    SEND QUEUE MAX    STORAGE FAILURE
IST1859I      1               0                  0
IST924I -------------------------------------------------------------
IST231I RTP MAJOR NODE = ISTRTPMN
IST654I I/O TRACE = OFF, BUFFER TRACE = OFF
IST1500I STATE TRACE = ON, OPTION = PU
IST314I END
```

Displaying an HPR-capable PU:

```
d net,id=ahhcpu1
IST097I DISPLAY ACCEPTED
IST075I NAME = AHHCPU1, TYPE = PU_T2.1 388
IST486I STATUS= ACTIV, DESIRED STATE= ACTIV
IST1043I CP NAME = SSCP2A, CP NETID = NETA, DYNAMIC LU = YES
IST1589I XNETALS = YES
IST1105I RESOURCE STATUS TGN CP-CP TG CHARACTERISTICS
IST1106I AHHCPU1  AC/R    21 YES   988D000000000000000014C00808080
IST1482I HPR = RTP - OVERRIDE = N/A - CONNECTION = YES
IST1510I LLERP = REQUIRED - RECEIVED = REQUIRED
IST136I LOCAL SNA MAJOR NODE = LSAHHC1
IST654I I/O TRACE = OFF, BUFFER TRACE = OFF
IST1500I STATE TRACE = OFF
IST1314I TRLE = TRLE1A    STATUS = ACTIV       CONTROL = MPC
IST314I END
```

Displaying a switched link station:

```
d net,id=swpux2a1,e
IST097I DISPLAY ACCEPTED
IST075I NAME = SWPUX2A1, TYPE = PU_T2.1
IST486I STATUS= ACTIV, DESIRED STATE= ACTIV
IST1043I CP NAME = SSCP2A, CP NETID = NETA, DYNAMIC LU = YES
IST1589I XNETALS = YES
IST1105I RESOURCE STATUS TGN CP-CP TG CHARACTERISTICS
IST1106I SWPUX2A1 AC/R    22 YES   982D000000000000000017100808080
IST1482I HPR = NONE - OVERRIDE = N/A - CONNECTION = NO
IST136I SWITCHED SNA MAJOR NODE = SWND3AB8
IST081I LINE NAME = LN3AXN11, LINE GROUP = GP3AXN10, MAJNOD = NCP3AB8
IST1068I PHYSICAL RESOURCE (PHYSRSC) = P3AXN10
IST654I I/O TRACE = OFF, BUFFER TRACE = OFF
IST1500I STATE TRACE = OFF
IST1656I VTAMTOPO = NOREPORT, NODE REPORTED - YES
IST1657I MAJOR NODE VTAMTOPO = INCLUDE
IST172I NO LOGICAL UNITS EXIST
IST314I END
```

Displaying a switched PU type 2:

```
d net,id=a04p501,scope=all
IST097I DISPLAY ACCEPTED
IST075I NAME = A04P501, TYPE = PU_T2
IST486I STATUS= CONCT      , DESIRED STATE = CONCT
IST136I SWITCHED SNA MAJOR NODE = A04SG1
IST654I I/O TRACE = OFF, BUFFER TRACE = OFF
IST1656I VTAMTOPO = REPORT, NODE REPORTED - YES
IST1657I MAJOR NODE VTAMTOPO = INCLUDE
IST355I LOGICAL UNITS:
IST080I A04L501A CONCT      A04L501B CONCT      A04L501C CONCT
IST080I A04L501D CONCT      A04L501E CONCT      A04L501F CONCT
```

```
IST080I A04L501G CONCT      A04L501H CONCT      A04L501I CONCT
IST080I A04L501J CONCT      A04L501K CONCT      A04L501L CONCT
IST080I A04L501M CONCT      A04L501N CONCT      A04L501O CONCT
IST314I END
```

Displaying a switched PU type 2.1 (AS/400®):

```
d net,id=a04p882,scope=all
IST097I DISPLAY ACCEPTED
IST075I NAME = A04P882, TYPE = PU_T2.1
IST486I STATUS= ACTIV--L-- , DESIRED STATE= ACTIV
IST1043I CP NAME = A04P882A, CP NETID = NETY, DYNAMIC LU = YES
IST1589I XNETALS = YES
IST1105I RESOURCE STATUS TGN CP-CP TG CHARACTERISTICS
IST1106I A04P882  AC/R    21 YES   802D000000000000000017100000000
IST136I SWITCHED SNA MAJOR NODE = A04SMNC
IST081I LINE NAME = J000401B, LINE GROUP = A04BLG1, MAJNOD = A0462ZC
IST654I I/O TRACE = OFF, BUFFER TRACE = OFF
IST355I LOGICAL UNITS:
IST080I A04I8823 ACT/S      A04I8822 ACT/S      A04P882A ACT/S----Y
IST080I A04I8821 ACT/S
IST314I END
```

Displaying a local SNA physical unit:

```
d net,id=pua,scope=all
IST097I DISPLAY ACCEPTED
IST075I NAME = PUA, TYPE = PU_T2
IST486I STATUS= ACTIV      , DESIRED STATE= ACTIV
IST136I LOCAL    SNA MAJOR NODE = A50LSNA
IST077I SIO = *NA*  CUA = 0770
IST654I I/O TRACE = OFF, BUFFER TRACE = OFF
IST355I LOGICAL UNITS:
IST080I LSNALU1  ACTIV      LSNALU2  ACTIV      LSNALU3  ACTIV
IST080I LSNALU4  ACTIV
IST314I END
```

Displaying a dynamic XCF local SNA physical unit:

```
d net,id=istp0001,scope=all
IST097I DISPLAY ACCEPTED
IST075I NAME = ISTP0001, TYPE = PU_T2.1
IST486I STATUS= ACTIV--LX-, DESIRED STATE= ACTIV
IST1043I CP NAME = SSCP2A, CP NETID = NETA, DYNAMIC LU = YES
IST1589I XNETALS = YES
IST1105I RESOURCE STATUS TGN CP-CP TG CHARACTERISTICS
IST1106I ISTP0001 AC/R    21 YES   988D000000000000000014C0080808
IST1482I HPR = NONE - OVERRIDE = N/A - CONNECTION = NO
IST136I LOCAL SNA MAJOR NODE = ISTLSXCF
IST654I I/O TRACE = OFF, BUFFER TRACE = OFF
IST1500I STATE TRACE = OFF
IST1314I TRLE = ISTT0001  STATUS = ACTIV----E  CONTROL = XCF
IST355I LOGICAL UNITS:
IST080I SSCP2A   ACT/S----Y
IST314I END
```

Displaying a dynamic XCF local SNA physical unit, specifying the control point name:

```
d net,id=sscp2a,idtype=xcfcp
IST097I DISPLAY ACCEPTED
IST075I NAME = ISTP0001, TYPE = PU_T2.1
IST486I STATUS= ACTIV--LX-, DESIRED STATE= ACTIV
IST1043I CP NAME = SSCP2A, CP NETID = NETA, DYNAMIC LU = YES
IST1589I XNETALS = YES
IST1105I RESOURCE STATUS TGN CP-CP TG CHARACTERISTICS
IST1106I ISTP0001 AC/R    21 YES   988D000000000000000014C00808080
IST1482I HPR = NONE - OVERRIDE = N/A - CONNECTION = NO
```

```
IST136I LOCAL SNA MAJOR NODE = ISTLSXCF
IST654I I/O TRACE = OFF, BUFFER TRACE = OFF
IST1500I STATE TRACE = OFF
IST1314I TRLE = ISTT0001  STATUS = ACTIV----E  CONTROL = XCF
IST314I END
```

Displaying a logical unit under an NCP:

```
d net,id=a04dxxx1,scope=all
IST097I DISPLAY ACCEPTED
IST075I NAME = NETA.A04DXXX1, TYPE = LOGICAL UNIT
IST486I STATUS= NEVAC----T , DESIRED STATE= INACT
IST1447I REGISTRATION TYPE = CDSERVR
IST977I MDLTAB=***NA*** ASLTAB=***NA***
IST861I MODETAB=***NA*** USSTAB=***NA*** LOGTAB=***NA***
IST934I DLOGMOD=***NA*** USS LANGTAB=***NA***
IST597I CAPABILITY-PLU INHIBITED,SLU INHIBITED,SESSION LIMIT 00000001
IST081I LINE NAME = A04VXX, LINE GROUP = A04XNPAX, MAJNOD = A0462ZC
IST135I PHYSICAL UNIT = A04NXXX
IST082I DEVTYPE = LU
IST654I I/O TRACE = OFF, BUFFER TRACE = OFF
IST171I ACTIVE SESSIONS = 0000000000, SESSION REQUESTS = 0000000000
IST172I NO SESSIONS EXIST
IST314I END
```

Displaying a switched logical unit:

```
d net,id=a31d0711,scope=all
IST097I DISPLAY ACCEPTED
IST075I NAME = A31D0711, TYPE = LOGICAL UNIT
IST486I STATUS= NEVAC      , DESIRED STATE= INACT
IST1447I REGISTRATION TYPE = CDSERVR
IST977I MDLTAB=***NA*** ASLTAB=***NA***
IST861I MODETAB=CRYPTLOG USSTAB=AUSSTAB LOGTAB=INTERP
IST934I DLOGMOD=REQENCRP USS LANGTAB=***NA***
IST597I CAPABILITY-PLU INHIBITED,SLU INHIBITED,SESSION LIMIT 00000001
IST136I SWITCHED SNA MAJOR NODE = SMNDDNN
IST135I PHYSICAL UNIT = A31P021
IST082I DEVTYPE = LU
IST654I I/O TRACE = OFF, BUFFER TRACE = OFF
IST171I ACTIVE SESSIONS = 0000000000, SESSION REQUESTS = 0000000000
IST172I NO SESSIONS EXIST
IST314I END
```

Displaying a local SNA logical unit:

```
d net,id=lsnalu1,scope=all
IST097I DISPLAY ACCEPTED
IST075I NAME = NETA.LSNALU1, TYPE = LOGICAL UNIT
IST486I STATUS= ACTIV      , DESIRED STATE= ACTIV
IST1447I REGISTRATION TYPE = CDSERVR
IST977I MDLTAB=***NA*** ASLTAB=***NA***
IST861I MODETAB=AMODETAB USSTAB=AUSSTAB LOGTAB=***NA***
IST934I DLOGMOD=D4A32782 USS LANGTAB=***NA***
IST597I CAPABILITY-PLU INHIBITED,SLU INHIBITED,SESSION LIMIT 00000001
IST136I LOCAL    SNA MAJOR NODE = A50LSNA
IST135I PHYSICAL UNIT = PUA , CUA = 0770
IST082I DEVTYPE = LU
IST654I I/O TRACE = OFF, BUFFER TRACE = OFF
IST171I ACTIVE SESSIONS = 0000000000, SESSION REQUESTS = 0000000000
IST172I NO SESSIONS EXIST
IST314I END
```

Displaying a local non-SNA logical unit:

```
d net,id=a50a721,scope=all
IST097I DISPLAY ACCEPTED
IST075I NAME = NETA.A50A721, TYPE = LOGICAL UNIT
```

```
IST486I STATUS= ACT/S      , DESIRED STATE= ACTIV
IST1447I REGISTRATION TYPE = CDSERVR
IST977I MDLTAB=***NA*** ASLTAB=***NA***
IST861I MODETAB=AMODETAB USSTAB=AUSSTAB LOGTAB=INTERP
IST934I DLOGMOD=M23270I  USS LANGTAB=***NA***
IST597I CAPABILITY-PLU INHIBITED,SLU ENABLED  ,SESSION LIMIT 00000001
IST351I LOCAL 3270 MAJOR NODE = A50LOCAL
IST077I SIO = 00010 CUA = 0721
IST1131I DEVICE = LU
IST654I I/O TRACE = OFF, BUFFER TRACE = OFF
IST171I ACTIVE SESSIONS = 0000000001, SESSION REQUESTS = 0000000001
IST206I SESSIONS:
IST634I NAME     STATUS         SID          SEND RECV VR TP NETID
IST635I ECHOC1C  ACTIV-P    D73BC0750F6AE8F3 0000 0001  0  0 NETC
IST635I ECHO50B  PREALC-P   ECC39EEE2AA3BC6E                 NETA
IST314I END
```

Displaying a native ATM permanent virtual channel (PVC):

```
d net,id=lnp1a2a1,scope=all
IST097I DISPLAY ACCEPTED
IST075I NAME = LNP1A2A1, TYPE = LINE
IST486I STATUS= ACTIV, DESIRED STATE= ACTIV
IST087I TYPE = LEASED             , CONTROL = SDLC, HPDT = *NA*
IST1554I PVCNAME = PV11211
IST134I GROUP = GPP1A1, MAJOR NODE = XCAOSA1A
IST1500I STATE TRACE = OFF
IST084I NETWORK RESOURCES:
IST089I PP1A2A1  TYPE = PU_T2.1          , ACTIV
IST314I END
```

Displaying a remote node connected through a native ATM PVC:

```
d net,id=pp1a2a1,scope=all
IST097I DISPLAY ACCEPTED
IST075I NAME = PP1A2A1, TYPE = PU_T2.1
IST486I STATUS= ACTIV, DESIRED STATE= ACTIV
IST1043I CP NAME = SSCP2A, CP NETID = NETA, DYNAMIC LU = YES
IST1589I XNETALS = YES
IST1105I RESOURCE STATUS TGN CP-CP TG CHARACTERISTICS
IST1106I PP1A2A1  AC/R    21 YES   182D0000000000000000017100808080
IST1482I HPR = RTP - OVERRIDE = N/A - CONNECTION = YES
IST1510I LLERP = REQUIRED - RECEIVED = REQUIRED
IST1555I VPCI/VCI = 010100
IST081I LINE NAME = LNP1A2A1, LINE GROUP = GPP1A1, MAJNOD = XCAOSA1A
IST654I I/O TRACE = OFF, BUFFER TRACE = OFF
IST1500I STATE TRACE = OFF
IST172I NO LOGICAL UNITS EXIST
IST314I END
```

Displaying a remote node connected through a native ATM switched virtual channel (SVC):

```
d net,id=sw1a2a,scope=all
IST097I DISPLAY ACCEPTED
IST075I NAME = SW1A2A, TYPE = PU_T2.1
IST486I STATUS= ACTIV, DESIRED STATE= ACTIV
IST1043I CP NAME = SSCP2A, CP NETID = NETA, DYNAMIC LU = YES
IST1589I XNETALS = YES
IST1105I RESOURCE STATUS TGN CP-CP TG CHARACTERISTICS
IST1106I SW1A2A   AC/R    22 YES   182D0000000000000000017100808080
IST1482I HPR = RTP - OVERRIDE = N/A - CONNECTION = YES
IST1510I LLERP = REQUIRED - RECEIVED = REQUIRED
IST1559I ATM ADDRESS                                    TYPE      FORMAT
IST1553I 11111111111111111111111111111111111111100    LOCAL     NSAP
IST1553I 21111111111111111111111111111111111111110    REMOTE    NSAP
IST1555I VPCI/VCI = 010200
IST136I SWITCHED SNA MAJOR NODE = SWXCA1A
```

```
IST081I LINE NAME = LN1A2A, LINE GROUP = GP1A2A, MAJNOD = XCAOSA1A
IST654I I/O TRACE = OFF, BUFFER TRACE = OFF
IST1500I STATE TRACE = OFF
IST1656I VTAMTOPO = NOREPORT, NODE REPORTED - YES
IST1657I MAJOR NODE VTAMTOPO = INCLUDE
IST355I LOGICAL UNITS:
IST080I SW1A2AL  NEVAC
IST314I END
```

Displaying a remote node connected through Enterprise Extender:

```
d net,id=sw1a2a,scope=all
IST097I DISPLAY ACCEPTED
IST075I NAME = SW1A2A, TYPE = PU_T2.1
IST486I STATUS= ACTIV, DESIRED STATE= ACTIV
IST1043I CP NAME = SSCP2A, CP NETID = NETA, DYNAMIC LU = YES
IST1589I XNETALS = YES
IST1105I RESOURCE STATUS TGN CP-CP TG CHARACTERISTICS
IST1106I SW1A2A   AC/R    22 YES   182D0000000000000000017100808080
IST1482I HPR = RTP - OVERRIDE = N/A - CONNECTION = YES
IST1510I LLERP = REQUIRED - RECEIVED = REQUIRED
IST1680I LOCAL IP ADDRESS 9.18.100.2
IST1680I REMOTE IP ADDRESS 223.254.254.1
IST136I SWITCHED SNA MAJOR NODE = SWXCA1
IST081I LINE NAME = LN1A2A, LINE GROUP = GP1A2A, MAJNOD = XCAHPR1A
IST654I I/O TRACE = OFF, BUFFER TRACE = OFF
IST1500I STATE TRACE = OFF
IST355I LOCAL UNITS:
IST080I SW1A2AL  NEVAC
IST314I END
```

Displaying a resource name that is known in several networks:

```
d net,id=*.applb12,max=3
IST097I DISPLAY ACCEPTED
IST075I NAME = NETA.APPLB12, TYPE = APPL
IST486I STATUS= CONCT      , DESIRED STATE= CONCT
IST1447I REGISTRATION TYPE = CDSERVR
IST977I MDLTAB=***NA*** ASLTAB=***NA***
IST861I MODETAB=***NA*** USSTAB=***NA*** LOGTAB=***NA***
IST934I DLOGMOD=***NA*** USS LANGTAB=***NA***
IST597I CAPABILITY-PLU INHIBITED,SLU INHIBITED,SESSION LIMIT NONE
IST231I APPL  MAJOR NODE = APPL1A
IST654I I/O TRACE = OFF, BUFFER TRACE = OFF
IST271I JOBNAME = ***NA***, STEPNAME = ***NA***, DSPNAME = ***NA***
IST228I ENCRYPTION = OPTIONAL, TYPE = DES
IST1563I CKEYNAME = APPLB12 CKEY = PRIMARY CERTIFY = NO
IST1552I MAC = NONE MACTYPE = NONE
IST1050I MAXIMUM COMPRESSION LEVEL - INPUT = 0, OUTPUT = 0
IST171I ACTIVE SESSIONS = 0000000000, SESSION REQUESTS = 0000000000
IST924I -------------------------------------------------------------
IST075I NAME = NETB.APPLB12, TYPE = CDRSC
IST486I STATUS= ACTIV      , DESIRED STATE= ACTIV
IST1447I REGISTRATION TYPE = CDSERVR
IST977I MDLTAB=***NA*** ASLTAB=***NA***
IST861I MODETAB=***NA*** USSTAB=***NA*** LOGTAB=***NA***
IST934I DLOGMOD=***NA*** USS LANGTAB=***NA***
IST597I CAPABILITY-PLU ENABLED  ,SLU ENABLED  ,SESSION LIMIT NONE
IST231I CDRSC MAJOR NODE = CDRSC1A
IST479I CDRM NAME = SSCP7B  , VERIFY OWNER = NO
IST1131I DEVICE = CDRSC
IST654I I/O TRACE = OFF, BUFFER TRACE = OFF
IST228I ENCRYPTION = NONE, TYPE = DES
IST1563I CKEYNAME = APPLB12 CKEY = PRIMARY CERTIFY = NO
IST1552I MAC = NONE MACTYPE = NONE
IST171I ACTIVE SESSIONS = 0000000000, SESSION REQUESTS = 0000000000
IST924I -------------------------------------------------------------
IST075I NAME = NETC.APPLB12, TYPE = CDRSC
```

```
IST486I STATUS= ACTIV      , DESIRED STATE= ACTIV
IST1447I REGISTRATION TYPE = CDSERVR
IST977I MDLTAB=***NA*** ASLTAB=***NA***
IST861I MODETAB=***NA*** USSTAB=***NA*** LOGTAB=***NA***
IST934I DLOGMOD=***NA*** USS LANGTAB=***NA***
IST597I CAPABILITY-PLU ENABLED  ,SLU ENABLED  ,SESSION LIMIT NONE
IST231I CDRSC MAJOR NODE = CDRSC1A
IST479I CDRM NAME = SSCP9C  , VERIFY OWNER = NO
IST1131I DEVICE = CDRSC
IST654I I/O TRACE = OFF, BUFFER TRACE = OFF
IST228I ENCRYPTION = NONE, TYPE = DES
IST1563I CKEYNAME = APPLB12 CKEY = PRIMARY CERTIFY = NO
IST1552I MAC = NONE MACTYPE = NONE
IST171I ACTIVE SESSIONS = 0000000000, SESSION REQUESTS = 0000000000
IST314I END
```

Displaying a generic resource name:

```
d net,id=a0418863,idtype=generic
IST097I DISPLAY ACCEPTED
IST075I NAME = GRAPPL, TYPE = GENERIC RESOURCE
IST1359I MEMBER NAME        OWNING CP   SELECTABLE  APPC
IST1360I NETA.NETAPPL1      SSCP2A         YES       NO
IST1360I NETA.APPL1         SSCP1A         NO        NO
IST1360I NETA.APPLAA1       SSCPAA         YES       NO
IST1393I GENERIC RESOURCE NAME RESOLUTION EXIT IS ISTEXCGR
IST314I END
```

Displaying an IP address in dotted decimal format when there is only one TN3270-client connected at this IP address.

```
d net,idtype=ipaddr,ID=9.67.113.58
IST097I DISPLAY ACCEPTED
IST075I NAME = NETA.TCPM1001, TYPE = APPL 472
IST486I STATUS= ACT/S, DESIRED STATE= ACTIV
IST1447I REGISTRATION TYPE = CDSERVR
IST599I REAL NAME = NETA.TCPM1001
IST977I MDLTAB=***NA*** ASLTAB=***NA***
IST861I MODETAB=ISTINCLM USSTAB=***NA*** LOGTAB=***NA***
IST934I DLOGMOD=***NA*** USS LANGTAB=***NA***
IST1632I VPACING =  7
IST597I CAPABILITY-PLU ENABLED  ,SLU ENABLED  ,SESSION LIMIT 00000001
IST231I APPL MAJOR NODE = TCPAPPLS
IST654I I/O TRACE = OFF, BUFFER TRACE = OFF
IST1500I STATE TRACE = OFF
IST271I JOBNAME = TCPCS, STEPNAME = TCPCS, DSPNAME = ISTD629B
IST228I ENCRYPTION = OPTIONAL, TYPE = DES
IST1563I CKEYNAME = TCPM1001 CKEY = PRIMARY CERTIFY = NO
IST1552I MAC = NONE MACTYPE = NONE
IST1050I MAXIMUM COMPRESSION LEVEL - INPUT = 0, OUTPUT = 0
IST1633I ASRCVLM = 1000000
IST1634I DATA SPACE USAGE: CURRENT = 0 MAXIMUM = 0
IST1669I IPADDR..PORT 9.67.113.58..1029
IST171I ACTIVE SESSIONS = 0000000001, SESSION REQUESTS = 0000000000
IST314I END
```

Displaying a TN3270 connected client.

```
d net,id=tcpm1001
IST097I DISPLAY ACCEPTED
IST075I NAME = NETA.TCPM1001, TYPE = APPL 476
IST486I STATUS= ACT/S, DESIRED STATE= ACTIV
IST1447I REGISTRATION TYPE = CDSERVR
IST977I MDLTAB=***NA*** ASLTAB=***NA***
IST861I MODETAB=ISTINCLM USSTAB=***NA*** LOGTAB=***NA***
IST934I DLOGMOD=***NA*** USS LANGTAB=***NA***
IST1632I VPACING =  7
IST597I CAPABILITY-PLU ENABLED  ,SLU ENABLED  ,SESSION LIMIT 00000001
```

```
IST231I APPL MAJOR NODE = TCPAPPLS
IST654I I/O TRACE = OFF, BUFFER TRACE = OFF
IST1500I STATE TRACE = OFF
IST271I JOBNAME = TCPCS, STEPNAME = TCPCS, DSPNAME = ISTD629B
IST228I ENCRYPTION = OPTIONAL, TYPE = DES
IST1563I CKEYNAME = TCPM1001 CKEY = PRIMARY CERTIFY = NO
IST1552I MAC = NONE MACTYPE = NONE
IST1050I MAXIMUM COMPRESSION LEVEL - INPUT = 0, OUTPUT = 0
IST1633I ASRCVLM = 1000000
IST1634I DATA SPACE USAGE: CURRENT = 0 MAXIMUM = 0
IST1669I IPADDR..PORT 9.67.113.58..1029
IST171I ACTIVE SESSIONS = 0000000001, SESSION REQUESTS = 0000000000
IST314I END
```

Displaying an IP address with multiple TN3270-client connections.

```
d net,idtype=ipaddr,id=9.67.113.58
IST097I DISPLAY ACCEPTED 614
IST1668I LUNAME             IPADDR..PORT
IST1670I NETA.TCPM1003      9.67.113.58..1033
IST1670I NETA.TCPM1002      9.67.113.58..1032
IST1670I NETA.TCPM1001      9.67.113.58..1031
IST314I END
```

DISPLAY INOPDUMP command

```
►►──DISPLAY NET,INOPDUMP──────────────────────────────────────────────►◄
```

Purpose

The DISPLAY INOPDUMP command is used to determine:

- The global status for INOPDUMP. The global status controls the INOPDUMP function for resources that are not defined within a transport resource list entry (TRLE). When a TRLE is activated, the global status is propagated to the newly activated TRLE if the TRLE InOpDump status has not been explicitly set.
- Whether TRLE controlled resources are subject to INOPDUMP and, if so, the TRLE names.
- Whether TRLEs subsequently activated, whose InOpDump status has not been explicitly set, will be subject to INOPDUMP.

Resulting display

The resulting display shows:

- The global status for INOPDUMP
- TRLEs that currently have INOPDUMP set to ON (TRLEs that currently have INOPDUMP=OFF are not displayed)

Examples

Displaying INOPDUMP information:

```
d net,inopdump
  IST097I DISPLAY ACCEPTED
  IST350I DISPLAY TYPE = INOPDUMP
  IST1865I GLOBAL INOPDUMP = OFF
  IST1866I TRLE = TRLE1A   INOPDUMP = ON
  IST1866I TRLE = IUTL0D00 INOPDUMP = ON
  IST314I END
```

DISPLAY LINES command

```
►►─DISPLAY NET,LINES──┬──────────────────────────────────────────────┬──┬─,LIST=ALL─────────┬──►
                      │                                   (1)        │  │                   │
                      └─,ID=──┬─name──────────────────────────────┬──┘  └─,LIST=──┬─ALL───┬──┘
                              │                                   │                 └─COUNT─┘
                              └─(──┬─name──┬──)──────────────────┘
                                   ▲──,────┘

►──┬─,MAX=DSPLYDEF_start_option_value─┬──┬──────────────────────────────────────────────────►
   │                                  │  │
   └─,MAX=──┬─*──────────────────────┬──┘  └─,OWNER=──┬─host_name─┬──┘
            └─number_of_resources────┘                └─*NONE─────┘

►──┬─,SCOPE=ALL──────────────────────┬──┬──────────────────────────────────────────────────►◄
   │                                 │  │
   │                  ┌─ALL─────────┐  └─,USE=──┬─DEFINED─┬──┘
   └─,SCOPE=──────────┴─────────────┴──────────┴─SPARE───┘
                      │─ACT─────────│
                      │─ACTONLY─────│
                      │─ALL─────────│
                      │─IACTIVE─────│
                      │─IINACT──────│
                      │─INACT───────│
                      │─INACTONLY───│
                      │─PENDING─────│
                      └─RESET───────┘
```

Notes:

1 Depending on the value of the DSPLYWLD start option, wildcard values can be used for this operand.

Abbreviations

Operand	Abbreviation
DISPLAY	D
SCOPE=ACT	ACT or A
SCOPE=ACTONLY	ACTONLY
SCOPE=ALL	EVERY or E
SCOPE=INACT	INACT or I
USE=DEFINED	DEFINED
USE=SPARE	SPARE
SCOPE=INACTONLY	INACTONL
SCOPE=PENDING	PEND
SCOPE=RESET	RESET

When using an abbreviation in place of an operand, code the abbreviation exactly as shown in the table. For example, when coding the abbreviation for SCOPE=ALL, code only EVERY or E. Do not code SCOPE=E.

Purpose

The DISPLAY LINES command displays the status of lines and channel links in the domain.

Note: To display lines and channel links independently of the major nodes that contain them, use the DISPLAY RSCLIST command with IDTYPE=LINES.

Operands

ID=name
Specifies the name of one or more active NCP, channel-attachment, or XCA major nodes whose subordinate lines and channel links are to be displayed.

If OWNER is also specified on this command, the value of ID must match the name of an NCP major node.

Depending on the value of the DSPLYWLD start option, wildcard values can be used for this operand. For more information about using wildcards, see “Using wildcard names” on page 11.

Attention: Specifying a wildcard name might degrade performance because VTAM checks every NCP, channel-attachment, and XCA major node in the network.

LIST
Specifies the level of detail to display.

LIST=COUNT
Displays only the number of resouces in each state, based on the filters specified in the SCOPE, OWNER, and IDTYPE keywords.

LIST=ALL
Displays information about all resources, based on the filters specified in the SCOPE, OWNER, and IDTYPE keywords.

MAX
Specifies the maximum number of resources that VTAM displays for this command. This operand is ony valid with LIST=ALL.

MAX=*
Specifies that the value of the DSPLYMAX start option is used to limit the display output.

MAX=number_of_resources
Specifies the number of lines and channel links that VTAM displays for this command. The valid range is 1–value of DSPLYMAX. The default is the value specified for the DSPLYDEF start option.

Specifying MAX limits the display output. VTAM searches only for the number of instances that you have specified. When that number is found, VTAM does not search any further. This saves processing time for the command and gives you control over the amount of display output generated by the command. If fewer lines or channel links are found than you have specified on MAX, VTAM displays only the lines and channel links that are found.

OWNER
Specifies whether lines and channel links defined with the OWNER operand are to be displayed. This operand is only valid when the name or the wildcard value specified on the ID operand matches the name of an NCP major node.

OWNER=host_name
Specifies that only lines and channel links whose owning SSCP (as determined by the OWNER operand on the GROUP or LINE definition statements) matches the *host_name* specified are to be displayed.

OWNER=*NONE
Specifies that only lines and channel links **without** an OWNER operand on the GROUP or LINE definition statements are to be displayed.

SCOPE
Specifies the desired scope of the display.

Note: If you specify the SCOPE operand without specifying a value SCOPE=ALL is assumed

SCOPE=ACT
Specifies that information is to be displayed about all active, pending, and connectable lines and channel links within the specified major nodes (or within all NCP, channel-attachment, and XCA major nodes if the ID operand is omitted). If this display is undesirably large, you can use SCOPE=ACTONLY to further limit the display.

SCOPE=ACTONLY
Specifies that information is to be displayed about all lines and channel links in an active state within the specified major nodes (or within all NCP, channel-attachment, and XCA major nodes if the ID operand is omitted). The display does **not** include lines and channel links in pending or connectable states. If no lines or channel links are found in an active state, you can use SCOPE=ACT to broaden the scope of the display to include those in active, connectable, and pending states.

SCOPE=ALL
Specifies that information is to be displayed about all lines and channel links (regardless of their status) within the specified major nodes (or within all NCP, channel-attachment, and XCA major nodes if the ID operand is omitted).

SCOPE=IACTIVE
Specifies that information is to be displayed about all lines and channel links within the specified major nodes (or within all NCP, channel-attachment, and XCA major nodes if the ID operand is omitted) which are ISTATUS=ACTIVE.

SCOPE=IINACT
Specifies that information is to be displayed about all lines and channel links within the specified major nodes (or within all NCP, channel-attachment, and XCA major nodes if the ID operand is omitted) which are STATUS=INACTIVE.

SCOPE=INACT
Specifies that information is to be displayed about all inactive lines and channel links within the specified major nodes (or within all NCP, channel-attachment, and XCA major nodes if the ID operand is omitted). If this display is undesirably large, you can use SCOPE=INACTONLY or SCOPE=RESET to further limit the display.

SCOPE=INACTONLY
Specifies that information is to be displayed about all inactive lines and

channel links within the specified major nodes (or within all major nodes if the ID operand is omitted). Resources in a RESET state are not included in the SCOPE=INACTONLY display.

SCOPE=PENDING
Specifies that information is to be displayed about all pending lines and channel links within the specified major nodes (or within all NCP, channel-attachment, and XCA major nodes if the ID operand is omitted). A pending state is a transient state to or from the fully active state.

SCOPE=RESET
Specifies that information is to be displayed about all lines and channel links in a RESET state within the specified major nodes (or within all NCP, channel-attachment, and XCA major nodes if the ID operand is omitted).

USE
Specifies whether information is to be displayed about lines that are currently designated as DEFINED or SPARE. If you do not specify USE, information about both spare and defined lines is displayed.

USE=DEFINED
Specifies that information is to be displayed only about lines that are currently usable.

USE=SPARE
Specifies that information is to be displayed only about spare lines.

Resulting display

VTAM displays the name and status of each line within the specified major node (or within all major nodes containing lines if ID is omitted). The display is limited to active, inactive, or pending minor nodes if specified on the SCOPE operand.

Examples

Displaying all lines:

```
d net,lines
IST097I DISPLAY ACCEPTED
IST350I DISPLAY TYPE = LINES
IST354I PU T4/5 MAJOR NODE = ISTPUS
IST170I LINES:
IST080I 0016-L   ACTIV----I 0017-L   ACTIV----I
IST354I PU T4/5 MAJOR NODE = A0462ZC
IST170I LINES:
IST080I A04B00   NEVAC      A04B01   NEVAC      A04B03   NEVAC
IST080I A04B32   NEVAC      A04B33   NEVAC      A04B35   NEVAC
IST080I A04VXX   NEVAC----T A04S02   NEVAC      A04S34   NEVAC
IST080I A04S04   NEVAC      A04S16   NEVAC      A04S20   NEVAC
IST080I A04S36   NEVAC      A04S48   NEVAC      A04S52   NEVAC
IST080I A04S128  NEVAC      A04S136  NEVAC      A04PT88  ACTIV
IST080I A04PT89  NEVAC      A04PT92  NEVAC      J0004001 ACTIV
IST080I J0004003 ACTIV      J0004005 ACTIV      J0004007 ACTIV
IST080I J0004009 ACTIV      J000400B ACTIV      J000400D ACTIV
IST080I J000400F ACTIV      J0004011 ACTIV      J0004013 ACTIV
IST080I A04C00   NEVAC      A04C02   NEVAC
IST1454I 32 RESOURCE(S) DISPLAYED
IST314I END
```

Displaying all lines within a specific major node:

```
d net,lines,id=a0362zc
IST097I DISPLAY ACCEPTED
IST350I DISPLAY TYPE = LINES
IST354I PU T4/5 MAJOR NODE = A0362ZC
```

DISPLAY LINES

```
IST170I LINES:
IST080I A03B00   NEVAC      A03B01   NEVAC      A03B32   NEVAC
IST080I A03B33   NEVAC      A03VXX   NEVAC----T A03S02   NEVAC
IST080I A03S16   ACTIV      A03S20   ACTIV      A03S128  NEVAC
IST080I A03PT88  ACTIV      A03PT89  ACTIV      J0003001 ACTIV
IST080I J0003003 ACTIV      J0003005 ACTIV      J0003007 ACTIV
IST080I J0003009 ACTIV      J000300B ACTIV      J000300D ACTIV
IST080I J000300F ACTIV      J0003011 ACTIV      J0003013 ACTIV
IST080I J0003015 ACTIV      J0003017 ACTIV      J0003019 ACTIV
IST080I J000301B ACTIV      J000301D ACTIV      J000301F NEVAC
IST080I J0003021 NEVAC      J0003023 NEVAC      J0003025 NEVAC
IST080I J0003027 NEVAC      J0003029 NEVAC      J000302B NEVAC
IST080I J000302D NEVAC      J000302F NEVAC      J0003031 ACTIV
IST080I J0003033 ACTIV      J0003035 ACTIV      J0003037 ACTIV
IST080I J0003039 ACTIV      J000303B ACTIV      J000303D ACTIV
IST080I J000303F ACTIV      J0003041 ACTIV      J0003043 ACTIV
IST080I J0003045 ACTIV      J0003047 ACTIV      J0003049 ACTIV
IST080I J000304B ACTIV      J000304D ACTIV      J000304F NEVAC
IST080I A03C08   NEVAC      A03C10   NEVAC      A03C00   NEVAC
IST080I A03C02   NEVAC
IST1454I 55 RESOURCE(S) DISPLAYED FOR ID=A0362ZC
IST314I END
```

Displaying all lines owned by a specific SSCP:

```
d net,lines,owner=sscp1a
IST097I DISPLAY ACCEPTED
IST350I DISPLAY TYPE = LINES
IST354I PU T4/5 MAJOR NODE = NCP3AA1
IST170I LINES:
IST080I LN3A1    NEVAC      LN3A7    NEVAC      LN3A4    NEVAC
IST080I LN3A4A1  NEVAC      LN3A4A2  NEVAC      LN3A4A3  NEVAC
IST080I LN3A4A4  NEVAC      LN3A4AM  NEVAC      LN3A5A1  NEVAC
IST080I LN3A5A2  NEVAC      LN3A8A1  NEVAC
IST1454I 11 RESOURCE(S) DISPLAYED
IST314I END
```

Displaying lines, limiting output to 3 resources:

```
d net,lines,max=3
IST097I DISPLAY ACCEPTED
IST350I DISPLAY TYPE = LINES
IST354I PU T4/5 MAJOR NODE = NCP3AA1
IST170I LINES:
IST080I LN3A1    NEVAC      LN3A6    NEVAC      LN3A7    NEVAC
IST1315I DISPLAY TRUNCATED AT MAX = 3
IST1454I 3 RESOURCE(S) DISPLAYED
IST314I END
```

Displaying LIST=COUNT:

```
d net,lines,id=ncp3ab8,list=count
IST097I DISPLAY ACCEPTED
IST350I DISPLAY TYPE = LINES
IST354I PU T4/5 MAJOR NODE = NCP3AB8
IST1747I SUMMARY OF STATE INFORMATION:
IST1748I RESET =          1  INACT =         67  ACTIV =          1
IST1454I 69 RESOURCE(S) DISPLAYED FOR ID=NCP3AB8
IST314I END
```

DISPLAY LMTBL command

Display partner LUs in LU-mode table:

```
►►──DISPLAY NET,LMTBL──,ID=appl_name──,TYPE=LUNAME──┬──────────────────────────┬──────►◄
                                                    ├─,SCOPE=ONLY──────────────┤
                                                    │                ┌─ALL─┐    │
                                                    └─,SCOPE=────────┴─────┴────┘
                                                                     ├─ONLY─┤
                                                                     └─ALL──┘
```

Display logon mode names in LU-mode table:

```
►►──DISPLAY NET,LMTBL──,ID=appl_name──,LUNAME=lu_name──,TYPE=LOGMODE──────────►◄
```

Abbreviations

Operand	Abbreviation
DISPLAY	D
LUNAME	LU
SCOPE=ALL	EVERY or E
SCOPE=ONLY	NONE or N

Purpose

The DISPLAY LMTBL (LU-mode table) command displays information contained in the LU-mode table. It shows either all logon mode names defined for an application program and its partner LU or the names of all partner LUs for the specified application program.

Operands

ID=appl_name
Specifies the name of the LU 6.2 application program to which the requested information applies. *appl_name* cannot be a network-qualified name.

LUNAME=lu_name
Specifies the name of the partner LU to which the requested logon mode information applies. LUNAME is required for TYPE=LOGMODE. The name can be a network-qualified name in the form of *netid.luname*.

If PARMS=(NQNAMES=NO) is coded on the ACB macro of the resource named on the ID operand, and a network-qualified name is specified, the network identifier is ignored.

If PARMS=(NQNAMES=YES) is coded on the ACB macro, *luname* can be either a non-network-qualified name or a network-qualified name. If *luname* is a non-network-qualified name, the command is processed against all LUs with that non-network-qualified name across all networks. If *luname* is a network-qualified name, the command is processed against the LU in the specified network.

SCOPE
Specifies the desired scope of the display. SCOPE is valid only when TYPE=LUNAME is specified.

Note: If you specify the SCOPE operand without specifying a value SCOPE=ALL is assumed.

SCOPE=ALL
Specifies that additional information is to be displayed about the partner LUs stored in the LU-mode table.

SCOPE=ONLY
Specifies that additional information is not to be displayed.

TYPE
Specifies the type of information you want to display.

TYPE=LUNAME
Displays the names of all partner LUs that are defined in the LU-mode table for the LU 6.2 application program specified.

TYPE=LOGMODE
Displays the logon mode names defined in the LU-mode table for the application program and partner LU specified.

Resulting display

The resulting VTAM display shows:

- For TYPE=LUNAME:
  - SCOPE=ONLY
    - The name of the specified application program
    - The name of each partner LU associated with the specified application program
  - SCOPE=ALL
    - The type of LU entry which contains the partner LU definitions
    - The other name, if any, the partner LU is known by
- For TYPE=LOGMODE:
  - The name of the specified application program and partner LU
  - The name of logon modes associated with the partner LUs of the specified application program

Examples

Displaying logon mode names in LU-mode table:

```
d net,lmtbl,type=logmode,id=echo50b,luname=netc.echoc1a
IST097I DISPLAY ACCEPTED
IST1006I LOGMODE NAMES DEFINED IN LU NETC.ECHOC1A FOR ECHO50B
IST988I SNASVCMG BATCH
IST314I END
```

Displaying partner LUs in LU-mode table:

```
d net,lmtbl,type=luname,id=echo50b
IST097I DISPLAY ACCEPTED
IST1006I LU NAMES DEFINED FOR ECHO50B
IST1154I NETC.ECHOC1A
IST314I END
```

Displaying partner LUs in LU-mode table with LU entry types and associated names:

```
d net,lmtbl,type=luname,id=appcap06,scope=all
IST097I DISPLAY ACCEPTED
IST1006I LU NAMES DEFINED FOR APPCAP06 397 00003
IST1409I NETA.APPCAP05     ASSOC = NETA.TOM            ETYPE = SUPPLIED
IST1409I NETA.TOM          ASSOC = NETA.APPCAP05       ETYPE = VARIANT
IST314I END
```

DISPLAY LUGROUPS command

Display all LUGROUP major nodes:

```
►►──DISPLAY NET,LUGROUPS──────────────────────────────────────────────►
                                                                       
   ┌─,SCOPE=ONLY──────────────────────────────────────────────────────┐
►──┤                                                                  ├──────────────────────────────────────────────────────►◄
   └─,SCOPE=──┬─ONLY──────────────────────────────────────────────────┬──────────────────────────────────────────────────────
              │                   ┌─,MAX=DSPLYDEF_start_option_value─┐│
              └─ALL───────────────┤                                  ├┘
                                  └─,MAX=──┬─*──────────────────────┬─┘
                                           └─number_of_resources────┘
```

Display a specific LUGROUP major node:

```
►►──DISPLAY NET,LUGROUPS──,ID=lugroup_major_node_name──────────────────►
                                                                       
   ┌─,SCOPE=ONLY──────────────────────────────────────────────────────┐
►──┤                                                                  ├──────────────────────────────────────────────────────►◄
   └─,SCOPE=──┬─ONLY──────────────────────────────────────────────────┬──────────────────────────────────────────────────────
              │                   ┌─,MAX=DSPLYDEF_start_option_value─┐│
              └─ALL───────────────┤                                  ├┘
                                  └─,MAX=──┬─*──────────────────────┬─┘
                                           └─number_of_resources────┘
```

Display a model LU group:

```
►►──DISPLAY NET,LUGROUPS──,ID=model_lu_group───────────────────────────►
                                                                       
   ┌─,SCOPE=ONLY──────────────────────────────────────────────────────┐
►──┤                                                                  ├──────────────────────────────────────────────────────►◄
   └─,SCOPE=──┬─ONLY──────────────────────────────────────────────────┬──────────────────────────────────────────────────────
              │                   ┌─,MAX=DSPLYDEF_start_option_value─┐│
              └─ALL───────────────┤                                  ├┘
                                  └─,MAX=──┬─*──────────────────────┬─┘
                                           └─number_of_resources────┘
```

Display a model LU:

```
►►──DISPLAY NET,LUGROUPS──,ID=model_lu_name──,GROUP=model_lu_group─────►
                                                                       
   ┌─,SCOPE=ONLY──────────────────────────────────────────────────────┐
►──┤                                                                  ├──────────────────────────────────────────────────────►◄
   └─,SCOPE=──┬─ONLY──────────────────────────────────────────────────┬──────────────────────────────────────────────────────
              │                   ┌─,MAX=DSPLYDEF_start_option_value─┐│
              └─ALL───────────────┤                                  ├┘
                                  └─,MAX=──┬─*──────────────────────┬─┘
                                           └─number_of_resources────┘
```

Abbreviations

Operand	Abbreviation
DISPLAY	D
SCOPE=ALL	EVERY or E
SCOPE=ONLY	NONE or N

When using an abbreviation in place of an operand, code the abbreviation exactly as shown in the table. For example, when coding the abbreviation for SCOPE=ALL, code only EVERY or E. Do not code SCOPE=E.

Purpose

The DISPLAY LUGROUPS (logical unit groups) command provides information about LUGROUP major nodes, model LU groups, and specific model LUs within an LU group.

Operands

GROUP=model_lu_group
Specifies the name of a model LU group. This operand is valid only if the ID operand specifies a model LU. It is required if the ID operand specifies a model LU to indicate which model LU group to search. Because two different model LU groups can contain model LUs with the same name, this specification of which model LU group to search is necessary.

ID=name
Specifies the name of one the following:
- LUGROUP major node name
- Model LU group
- Model LU name

MAX
Specifies the maximum number of resources that VTAM displays for this command.

The MAX operand is only valid when SCOPE=ALL is specified.

MAX=*
Specifies that the value of the DSPLYMAX start option is used to limit the display output.

MAX=number_of_resources
Specifies the number of resources to display for this command. The valid range is 1–value of DSPLYMAX. The default is the value specified for the DSPLYDEF start option.

Specifying MAX limits the display output. VTAM searches only for the number of instances that you have specified. When that number is found, VTAM does not search any further. This saves processing time for the command and gives you control over the amount of display output generated by the command. If fewer resources are found than you have specified on MAX, VTAM displays only the resources that are found.

SCOPE
Specifies what LUGROUP resources are displayed. The results depend on whether an ID is specified and whether SCOPE is specified as ONLY or ALL.

SCOPE=ALL
Specifies that the requested node and all its subordinate nodes be displayed.

SCOPE=ONLY
Specifies that only the requested nodes be displayed.

Resulting display

The resulting VTAM display shows:

- If ID is not specified:
  - For SCOPE=ONLY, all LUGROUP major nodes
  - For SCOPE=ALL, all LUGROUP major nodes, their model LU groups, and their model LUs
- If ID specifies an LUGROUP major node:
  - For SCOPE=ONLY, each of the LU groups within the specified LUGROUP major node
  - For SCOPE=ALL, the specified LUGROUP major node, its model LU groups, and their model LUs
- If ID specifies a model LU group:
  - For SCOPE=ONLY, the specified model LU group, verifying that it is active
  - For SCOPE=ALL, the specified model LU group and its model LUs
- If ID specifies a model LU and GROUP specifies a model LU group:
  - For SCOPE=ONLY, the specified model LU, verifying that it exists within the specified model LU group
  - For SCOPE=ALL, the characteristics of the specified model LU

Examples

Displaying all LU groups:

```
d net,lugroups,scope=all
IST097I DISPLAY ACCEPTED
IST350I DISPLAY TYPE = LUGROUP MAJOR NODES
IST1060I LUGROUP MAJOR NODE = LUGRP50
IST075I NAME = LARRY, TYPE = MODEL LU GROUP
IST355I LOGICAL UNITS:
IST080I 3194@00             3194000             @@90001
IST080I 329000@             327@@01             9373@
IST080I 9375@               3270@               @
IST075I NAME = CURLY, TYPE = MODEL LU GROUP
IST355I LOGICAL UNITS:
IST080I 3194@               3290@               3270001
IST080I 3270@               @
IST075I NAME = MOE, TYPE = MODEL LU GROUP
IST355I LOGICAL UNITS:
IST080I 3194@               3290@               3270001
IST080I 3270@               @
IST1454I 19 RESOURCE(S) DISPLAYED
IST314I END
```

Displaying a specific LUGROUP major node:

```
d net,lugroups,id=lugrp50
IST097I DISPLAY ACCEPTED
IST1060I LUGROUP MAJOR NODE = LUGRP50
IST075I NAME = LARRY, TYPE = MODEL LU GROUP
IST075I NAME = CURLY, TYPE = MODEL LU GROUP
IST075I NAME = MOE, TYPE = MODEL LU GROUP
IST314I END
```

Displaying a model LU group:

```
d net,lugroups,id=larry,scope=all
IST097I DISPLAY ACCEPTED
IST075I NAME = LARRY, TYPE = MODEL LU GROUP
IST355I LOGICAL UNITS:
IST080I 3194@00             3194000             @@90001
IST080I 329000@             327@@01             9373@
IST080I 9375@               3270@               @
IST1454I 9 RESOURCE(S) DISPLAYED
IST314I END
```

Displaying a specific LU in a lugroup major node:

```
d net,lugroups,id=3194@00,group=larry,scope=all
IST097I DISPLAY ACCEPTED
IST075I NAME = NETA.3194@00, TYPE = MODEL LU
IST977I MDLTAB=***NA*** ASLTAB=***NA***
IST861I MODETAB=***NA*** USSTAB=***NA*** LOGTAB=***NA***
IST934I DLOGMOD=***NA*** USS LANGTAB=***NA***
IST228I ENCRYPTION = NONE, TYPE = DES
IST1563I CKEYNAME = 3194@00 CKEY = PRIMARY CERTIFY = NO
IST1552I MAC = NONE MACTYPE = NONE
IST314I END
```

DISPLAY MAJNODES command

```
►►──DISPLAY NET,MAJNODES──┬─,MAX=DSPLYDEF_start_option_value─┬──────────────────►◄
                          └─,MAX=──┬─*──────────────────────┘
                                   └─number_of_resources────┘
```

Abbreviations

Operand	Abbreviation
DISPLAY	D

Purpose

The DISPLAY MAJNODES (major nodes) command displays the status of all active major nodes in the domain.

This command displays the status of all **active** major nodes, which include the following major node types:

- Adjacent CP
- Application program
- Cross-domain resource manager (CDRM); in a multiple-domain network
- Channel-attachment
- Cross-domain resource (CDRSC); in a multiple-domain network (including independent logical units)
- Dynamic XCF local SNA major node (ISTLSXCF)
- External communication adapter (XCA)
- Local SNA
- Local non-SNA
- LUGROUP
- Model
- NCP
- Rapid transport protocol (ISTRTPMN)
- Switched
- Transport resource list (ISTTRL)

Note: NCP major nodes, which are type 4 physical units, are listed in the display as PU T4/5 major nodes. The VTAM host physical unit, which is a type 5 physical unit, is listed in the display as a PU T4/5 major node. Channel-attachment major nodes are listed in the display as CA major nodes.

Operands

MAX
Specifies the maximum number of active major nodes that VTAM displays for this command.

MAX=*
Specifies that the value of the DSPLYMAX start option is used to limit the display output.

MAX=number_of_resources
Specifies the number of active major nodes that VTAM displays for this command. The valid range is 1–value of DSPLYMAX. The default is the value specified for the DSPLYDEF start option.

Specifying MAX limits the display output. VTAM searches only for the number of instances that you have specified. When that number is found, VTAM does not search any further. This saves processing time for the command and gives you control over the amount of display output generated by the command. If fewer active major nodes are found than you have specified on MAX, VTAM displays only the active major nodes that are found.

Resulting display

The resulting display gives the name, type, and status of each known major node.

Examples

Displaying major nodes:

```
d net,majnodes
IST097I  DISPLAY ACCEPTED
IST350I  DISPLAY TYPE = MAJOR NODES
IST089I  VTAMSEG  TYPE = APPL SEGMENT     , ACTIV
IST089I  ISTPUS   TYPE = PU T4/5          , ACTIV
IST089I  ISTPDILU TYPE = CDRSC SEGMENT    , ACTIV
IST089I  ISTADJCP TYPE = ADJCP MAJOR NODE , ACTIV
IST089I  ISTCDRDY TYPE = CDRSC SEGMENT    , ACTIV
IST089I  ISTTRL   TYPE = TRL MAJOR NODE   , ACTIV
IST089I  APPC1A   TYPE = APPL SEGMENT     , ACTIV
IST089I  APPL1A   TYPE = APPL SEGMENT     , ACTIV
IST089I  CDRM1A   TYPE = CDRM SEGMENT     , ACTIV
IST089I  CDRSC1A  TYPE = CDRSC SEGMENT    , ACTIV
IST089I  DSIAPPL1 TYPE = APPL SEGMENT     , ACTIV
IST089I  LOCAL1A  TYPE = LCL 3270 MAJ NODE, ACTIV
IST089I  ISTLSXCF TYPE = LCL SNA MAJ NODE , ACTIV
IST1454I  13 RESOURCE(S) DISPLAYED
IST314I  END
```

Displaying major nodes: limiting output to two resources:

```
d net,majnodes,max=2
IST097I DISPLAY ACCEPTED
IST350I DISPLAY TYPE = MAJOR NODES
IST089I VTAMSEG  TYPE = APPL SEGMENT     , ACTIV
IST089I ISTPUS   TYPE = PU T4/5          , ACTIV
IST1315I DISPLAY TRUNCATED AT MAX = 2
IST1454I 2 RESOURCE(S) DISPLAYED
IST314I END
```

DISPLAY MODELS command

```
►►─DISPLAY NET,MODELS──┬──────────────────┬──┬──────────────────┬──────────────►◄
                       └─,ID=model_name───┘  ├─,SCOPE=ONLY──────┤
                                             └─,SCOPE=──┬─ONLY─┬─┘
                                                        └─ALL──┘
```

Abbreviations

Operand	Abbreviation
DISPLAY	D
SCOPE=ALL	EVERY or E
SCOPE=ONLY	NONE or N

When using an abbreviation in place of an operand, code the abbreviation exactly as shown in the table. For example, when coding the abbreviation for SCOPE=ALL, code only EVERY or E. Do not code SCOPE=E.

Purpose

The DISPLAY MODELS command provides information about model resources, excluding model applications.

VTAM can dynamically define switched PUs and LUs by defining a model major node with descriptions of model PUs and LUs. When a switched device that has not been defined to VTAM requests connection, VTAM copies these model descriptions to build dynamic switched PUs and LUs. The DISPLAY MODELS command allows you to view the models as defined by VTAM.

In addition, VTAM will use the Model XCF PU definition as the basis for defining dynamic XCF PUs when establishing XCF connectivity.

Operands

ID=model_name
Specifies the model whose definition you want to view. This includes the model major node and the individual model PU and LU devices.

SCOPE
Specifies which model resources to display. The results depend on whether an ID is specified and whether SCOPE is specified as ONLY or ALL.

SCOPE=ALL
If ID is not specified, SCOPE=ALL displays all model major nodes, model PUs, and model LUs defined to VTAM.

If ID specifies a model major node name, SCOPE=ALL displays that major node and its model PUs and LUs.

If ID specifies a model PU or LU, SCOPE=ALL displays information about that model PU or LU.

SCOPE=ONLY
If ID is not specified, SCOPE=ONLY displays all model major nodes defined to VTAM. No model PUs or LUs are displayed.

If ID specifies a model major node name, SCOPE=ONLY displays information about that major node. Its model PUs and LUs are not displayed.

If ID specifies a model PU or LU, SCOPE=ONLY displays information about that model PU or LU.

Resulting display

The resulting VTAM display shows:

- If ID is specified:
  - For SCOPE=ONLY, the name and type of the model node specified
  - For SCOPE=ALL, the name and type of the model node specified and, for a model major node, the name, type, and status its subordinate nodes
- If ID is not specified:
  - For SCOPE=ONLY, all model major nodes
  - For SCOPE=ALL, all model major nodes and the name, type, and status of their subordinate nodes

Examples

Displaying all model major nodes:

```
d net,models
IST097I DISPLAY ACCEPTED
IST350I DISPLAY TYPE = MODELS
IST1018I MODEL MAJOR NODE = A03MMNC
IST314I END
```

Displaying all model major nodes and their subordinate resources:

```
d net,models,scope=all
IST097I DISPLAY ACCEPTED
IST350I DISPLAY TYPE = MODELS
IST1018I MODEL MAJOR NODE = A03MMNC
IST1017I MODELS:
IST089I A03MMNPU TYPE = PU_T2            , RESET
IST089I A03MMNLU TYPE = LOGICAL UNIT     , RESET
IST314I END
```

Displaying a specific model major node and its subordinate resources:

```
d net,models,id=a03mmnc,scope=all
IST097I DISPLAY ACCEPTED
IST350I DISPLAY TYPE = MODELS
IST075I NAME = A03MMNC, TYPE = MODEL MAJOR NODE
IST1656I VTAMTOPO = REPORT, NODE REPORTED - YES
IST1017I MODELS:
IST089I A03MMNPU TYPE = PU_T2            , RESET
IST089I A03MMNLU TYPE = LOGICAL UNIT     , RESET
IST314I END
```

Displaying a specific PU in a model major node:

```
d net,models,id=a03mmnpu
IST097I DISPLAY  ACCEPTED
IST350I DISPLAY TYPE = MODELS
IST075I NAME = A03MMNPU         , TYPE = PHYSICAL UNIT
IST1018I MODEL MAJOR NODE = A03MMNC
IST314I END
```

Displaying a specific LU in a model major node:

DISPLAY MODELS

```
d net,models,id=a03mmnlu
IST097I DISPLAY  ACCEPTED
IST350I DISPLAY TYPE = MODELS
IST075I NAME =     .A03MMNLU    , TYPE = LOGICAL UNIT
IST1018I MODEL MAJOR NODE = A03MMNC
IST977I MDLTAB=MDLTAB1  ASLTAB=ASLTAB1
IST861I MODETAB=AMODETAB USSTAB=AUSSTAB  LOGTAB=INTERP
IST934I DLOGMOD=M23278I  USS LANGTAB=***NA***
IST1131I DEVICE = LU
IST228I ENCRYPTION = REQD, TYPE = TDES24
IST1563I CKEYNAME = A03MMNLU CKEY = PRIMARY CERTIFY = NO
IST1552I MAC = NONE MACTYPE = NONE
IST314I END
```

DISPLAY NCPSTOR command

```
►►──DISPLAY NET,NCPSTOR──,ADDR=address──,ID=ncp_name──────────────────────►

►─┬─,LENGTH=32──────────────┬─┬─,STORAGE=MAIN──────────┬──────────────────────►◄
  └─,LENGTH=number_of_bytes─┘ └─,STORAGE=─┬─DUMPMAIN─┬─┘
                                         ├─DUMPVEC──┤
                                         └─MAIN─────┘
```

Abbreviations

Operand	Abbreviation
DISPLAY	D

Purpose

The DISPLAY NCPSTOR (NCP storage) command displays either the storage contents of a communication controller running an NCP, or an NCP dump stored in an IBM 3720 or 3745 Communication Controller. This command displays up to 256 (decimal) bytes from any address within the communication controller or the dump stored in the IBM 3720 or 3745 Communication Controller.

Operands

ADDR=address
Specifies the address (in hexadecimal) of the first byte of data to be displayed.

ID=ncp_name
Specifies the name of the NCP whose storage is to be displayed.

LENGTH=number_of_bytes
Specifies the number of bytes of NCP storage to be displayed. Any decimal integer 1–256 can be specified. If LENGTH is omitted, VTAM displays 32 bytes (the default).

STORAGE
Specifies the type of storage to be displayed.

STORAGE=MAIN
Displays the storage contents of an IBM 3720 or 3745 Communication Controller running an NCP.

STORAGE=DUMPVEC
Displays the state vector (also called the dump header) of the NCP stored in the IBM 3720 or 3745 Communication Controller. The state vector contains items such as the NCP registers, storage keys, program state, and instruction addresses. The state vector is storage that is linearly addressable in the range 0–511, depending on the communication controller unit model. If the sum of the *number_of_bytes* specified for LENGTH and the *address* specified for ADDR is greater than 511, then LENGTH is modified to display the state vector from the *address* specified for ADDR to 511.

STORAGE=DUMPMAIN
Displays the main part of an NCP dump stored on the IBM 3270 or 3745

Communication Controller. This dump portion is mapped byte for byte to the main storage of the communication controller. The displayable address range starts at main storage address 0 and ends at the address one byte lower than the maximum storage installed on the communication controller external storage.

Resulting display

The resulting display shows:

- The type of storage
- The name of the NCP
- The contents of storage, in hexadecimal, with addresses

Examples

Displaying the NCP storage executing in the controller:

```
d net,ncpstor,id=a0362zc,addr=0,storage=main
IST097I DISPLAY ACCEPTED
IST244I NCP MAIN STORAGE        FOR ID = A0362ZC
IST245I 000000   714C01AA 719C09A8 B900000D B806B568
IST245I 000010   00000000 00000000 00000000 00000000
IST314I END
IST241I D NCPSTOR COMMAND COMPLETE FOR A0362ZC
```

Displaying the state vector of a dump stored on the controller:

```
d net,ncpstor,id=a0362zc,storage=dumpvec,addr=0
IST097I DISPLAY ACCEPTED
IST244I NCP DUMP VECTOR STORAGE FOR ID = A0362ZC
IST245I 000000   00800C02 011257AE 0001E088 00155994
IST245I 000010   00156648 001257A8 00155D40 0004D5E0
IST314I END
IST241I D NCPSTOR COMMAND COMPLETE FOR A0362ZC
```

Displaying the main portion of a dump stored on the controller:

```
d net,ncpstor,id=a0362zc,storage=dumpmain,addr=512,length=64
IST097I DISPLAY ACCEPTED
IST244I NCP DUMP MAIN STORAGE   FOR ID = A0362ZC
IST245I 000512       2742 68140910 17180728 27BE9001
IST245I 000520   28D02539 CD0435D0 A8022458 BF40047A
IST245I 000530   A80E2539 D440E3E1 35D025B9 BF40047A
IST245I 000540   00700070 6513E47F 21390458 5180F560
IST245I 000550   8846
IST314I END
IST241I D NCPSTOR COMMAND COMPLETE FOR A0362ZC
```

DISPLAY NETSRVR command

```
                          ┌─,SCOPE=ALL──────┐
►►──DISPLAY NET,NETSRVR──┤                 ├──────────────────────────────►◄
                          └─,SCOPE=──┬─ALL─┬─┘
                                     └─ONLY─┘
```

Abbreviations

Operand	Abbreviation
DISPLAY	D
SCOPE=ALL	EVERY or E
SCOPE=ONLY	NONE or N

When using an abbreviation in place of an operand, code the abbreviation exactly as shown in the table. For example, when coding the abbreviation for SCOPE=ALL, code only EVERY or E. Do not code SCOPE=E.

Purpose

The DISPLAY NETSRVR (network node server) command displays information about network node servers. Enter this command at the end node whose server information you want to display. This command is valid only when it is issued at an end node or migration data host.

Operands

SCOPE
Specifies the desired scope of the display.

SCOPE=ONLY
Displays the network node server list that is currently active and displays the current network node server.

SCOPE=ALL
Displays, in addition to the information shown for SCOPE=ONLY, other network nodes known to the end node that can act as network node servers. Other network nodes are allowed as servers only if the current network node server list contains a nameless entry.

Resulting display

The resulting display shows:

- The contents of the active network node server list.
- For each network node in the list, an indication of whether support for SLU-initiated sessions is required or optional in order to establish a CP-CP session with this end node.
- If the list contains explicit entries, the order in which the entries are used (FIRST or NEXT).
- If SCOPE=ALL is specified, other network nodes known to this end node that are allowed as network node servers. Other network nodes are allowed as servers only if the current list contains a nameless entry.

- The name of the current network node server. The name displayed here is the name of an adjacent network node that this end node has most recently determined to be a suitable network node server and with which this end node has either established CP-CP sessions or is in the process of establishing CP-CP sessions. At the time the DISPLAY NETSRVR command displays this name, CP-CP sessions with this network node may or may not be fully active yet.
- The name of the preferred network node server if one has been specified.

For more information on how to code a network node server list, see the *z/OS Communications Server: SNA Resource Definition Reference*.

Examples

Displaying a network node server list with one nameless entry and no explicit entries using SCOPE=ALL (no preferred network node server has been defined):

```
d net,netsrvr,scope=all
IST097I DISPLAY ACCEPTED
IST350I DISPLAY TYPE = NETWORK NODE SERVER LIST
IST1252I DEFINED NETWORK NODE SERVER LIST, NAME = NNSL2J
IST1253I ****NAMELESS****      SLUINIT = OPT
IST924I -------------------------------------------------------------
IST1255I OTHER NETWORK NODES ALLOWED AS SERVERS
IST1253I NETA.SSCP1A           SLUINIT = OPT
IST924I -------------------------------------------------------------
IST1256I CURRENT NETWORK NODE SERVER
IST1253I NETA.SSCP1A           SLUINIT = OPT
IST924I -------------------------------------------------------------
IST1677I PREFERRED NETWORK NODE SERVER
IST1253I NONE
IST314I END
```

Displaying a network node server list with one nameless entry and no explicit entries using SCOPE=ONLY (no preferred network node server has been defined):

```
d net,netsrvr,scope=only
IST097I DISPLAY ACCEPTED
IST350I DISPLAY TYPE = NETWORK NODE SERVER LIST
IST1252I DEFINED NETWORK NODE SERVER LIST, NAME = NNSL2J
IST1253I ****NAMELESS****      SLUINIT = OPT
IST924I -------------------------------------------------------------
IST1256I CURRENT NETWORK NODE SERVER
IST1253I NETA.SSCP1A           SLUINIT = OPT
IST924I -------------------------------------------------------------
IST1677I PREFERRED NETWORK NODE SERVER
IST1253I NONE
IST314I END
```

Displaying a network node server list with one explicit entry and no nameless entry using SCOPE=ALL (no preferred network node server has been defined):

```
d net,netsrvr,scope=all
IST097I DISPLAY ACCEPTED
IST350I DISPLAY TYPE = NETWORK NODE SERVER LIST
IST1252I DEFINED NETWORK NODE SERVER LIST, NAME = NNSL2B
IST1253I NETA.SSCP1A           SLUINIT = OPT
IST924I -------------------------------------------------------------
IST1254I SERVER LIST PROCESSED ORDER = FIRST
IST924I -------------------------------------------------------------
IST1255I OTHER NETWORK NODES ALLOWED AS SERVERS
IST1253I NONE
IST924I -------------------------------------------------------------
IST1256I CURRENT NETWORK NODE SERVER
IST1253I NETA.SSCP1A           SLUINIT = OPT
```

```
IST924I -------------------------------------------------------------
IST1677I PREFERRED NETWORK NODE SERVER
IST1253I NONE
IST314I END
```

Displaying a network node server list with one explicit entry and no nameless entry using SCOPE=ONLY (no preferred network node server has been defined):

```
d net,netsrvr,scope=only
IST097I DISPLAY ACCEPTED
IST350I DISPLAY TYPE = NETWORK NODE SERVER LIST
IST1252I DEFINED NETWORK NODE SERVER LIST, NAME = NNSL2B
IST1253I NETA.SSCP1A           SLUINIT = OPT
IST924I -------------------------------------------------------------
IST1254I SERVER LIST PROCESSED ORDER = FIRST
IST924I -------------------------------------------------------------
IST1256I CURRENT NETWORK NODE SERVER
IST1253I NETA.SSCP1A           SLUINIT = OPT
IST924I -------------------------------------------------------------
IST1677I PREFERRED NETWORK NODE SERVER
IST1253I NONE
IST314I END
```

Displaying the preferred network node server using SCOPE=ALL. A network node server list has not been activated.

```
d net,netsrvr,scope=all
IST097I  DISPLAY ACCEPTED
IST350I  DISPLAY TYPE = NETWORK NODE SERVER LIST
IST1252I DEFINED NETWORK NODE SERVER LIST, NAME = NONE
IST1253I NONE
IST924I ----------------------------------------------------
IST1255I OTHER NETWORK NODES ALLOWED AS SERVERS
IST1253I NETA.SSCP1A           SLUINIT = REQ
IST924I ----------------------------------------------------
IST1256I CURRENT NETWORK NODE SERVER
IST1253I NETA.SSCP1A           SLUINIT = REQ
IST924I ----------------------------------------------------
IST1677I PREFERRED NETWORK NODE SERVER
IST1253I NETA.SSCP1A           SLUINIT = REQ
IST314I END
```

Displaying the preferred network node server using SCOPE=ONLY. A network node server list has not been activated.

```
d net,netsrvr,scope=only
IST097I  DISPLAY ACCEPTED
IST350I  DISPLAY TYPE = NETWORK NODE SERVER LIST
IST1252I DEFINED NETWORK NODE SERVER LIST, NAME = NONE
IST1253I NONE
IST924I ----------------------------------------------------
IST1256I CURRENT NETWORK NODE SERVER
IST1253I NETA.SSCP1A           SLUINIT = REQ
IST924I ----------------------------------------------------
IST1677I PREFERRED NETWORK NODE SERVER
IST1253I NETA.SSCP1A           SLUINIT = REQ
IST314I END
```

Displaying a network node server list with four explicit entries and one nameless entry using SCOPE=ALL. A preferred network node server has been defined.

```
d net,netsrvr,scope=all
IST097I  DISPLAY ACCEPTED
IST350I  DISPLAY TYPE = NETWORK NODE SERVER LIST
IST1252I DEFINED NETWORK NODE SERVER LIST, NAME = NNSL2A
IST1253I NETA.SSCPBA           SLUINIT = OPT
IST1253I NETA.SSCPCA           SLUINIT = REQ
```

```
IST1253I NETA.SSCPDA           SLUINIT = OPT
IST1253I NETA.SSCPEA           SLUINIT = REQ
IST1253I ****NAMELESS****      SLUINIT = REQ
IST924I -----------------------------------------------------
IST1254I SERVER LIST PROCESSED ORDER = FIRST
IST1255I OTHER NETWORK NODES ALLOWED AS SERVERS
IST1253I NETA.SSCP1A           SLUINIT = REQ
IST924I -----------------------------------------------------
IST1256I CURRENT NETWORK NODE SERVER
IST1253I NETA.SSCP1A           SLUINIT = REQ
IST924I -------------------------------------------------------
IST1677I PREFERRED NETWORK NODE SERVER
IST1253I NETA.SSCP1A           SLUINIT = REQ
IST314I END
```

Displaying a network node server list with seven explicit entries and no nameless entry using SCOPE=ALL. A preferred network node server has been defined.

```
d net,netsrvr,scope=all
IST097I  DISPLAY ACCEPTED
IST350I DISPLAY TYPE = NETWORK NODE SERVER LIST
IST1252I DEFINED NETWORK NODE SERVER LIST, NAME = NNSL2B
IST1253I NETA.SSCPXX           SLUINIT = REQ
IST1253I NETA.SSCPAA           SLUINIT = REQ
IST1253I NETC.SSCP9C           SLUINIT = REQ
IST1253I NETA.SSCPBA           SLUINIT = OPT
IST1253I NETA.SSCPCA           SLUINIT = REQ
IST1253I NETA.SSCPDA           SLUINIT = OPT
IST1253I NETA.SSCPEA           SLUINIT = REQ
IST924I ----------------------------------------------
IST1254I SERVER LIST PROCESSED ORDER = FIRST
IST924I ----------------------------------------------
IST1255I OTHER NETWORK NODES ALLOWED AS SERVERS
IST1253I NETA.SSCP1A           SLUINIT = REQ
IST924I ----------------------------------------------
IST1256I CURRENT NETWORK NODE SERVER
IST1253I NETA.SSCP1A           SLUINIT = REQ
IST924I ----------------------------------------------
IST1677I PREFERRED NETWORK NODE SERVER
IST1253I NETA.SSCP1A           SLUINIT = REQ
IST314I END
```

DISPLAY PATHS command

```
►►──DISPLAY NET,PATHS──,ID=switched_pu_name──────────────────────────────►◄
```

Abbreviations

Operand	Abbreviation
DISPLAY	D
PATHS	P

Purpose

The DISPLAY PATHS command displays dial-out path information about a switched physical unit.

Operands

ID=switched_pu_name
Specifies the name of a switched physical unit.

Resulting display

The resulting display shows the physical unit name, line groups, telephone number or line name, path identifier, group identifier, retry count, availability of the path, and user-defined DLCADDR subfields (if any) containing additional dial information.

If the DLCADDR subfields are coded in binary-coded decimal (BCD) or hexadecimal (X) and contain an odd number of digits, the display is padded on the left with zeros. If the data type is BCD or X, a blank separates every eight characters of data.

Examples

Displaying dial-out path information:

```
d net,paths,id=pu1
IST097I DISPLAY ACCEPTED
IST148I DIAL OUT PATH INFORMATION FOR PHYSICAL UNIT PU1
IST149I LINE GRP  TELEPHONE NUMBER OR LINE NAME   PID GID CNT
IST168I GRP1             PATH21A-890-3333         001 001 003 AVA
IST168I GRP1                                      002 000 003 AVA
IST1575I DIALNO FOR PID: 002
IST1318I 1ABCDEFGHIJKLMNOPQRSTUVWXYZ1234567890
IST168I GRP1                                      003 001 003 AVA
IST1575I DIALNO FOR PID: 003
IST1318I 12345678901234567890123456789012345678901234567890123456734 5
IST1319I    678901234567890123456789012345678901234567890123456789012
IST1319I    345678901234567890123456789012345678901234561234567890123
IST1319I    456789012345678901234567890123456789012345612345678901234
IST1319I    56789012345
IST168I GRP1                                      004 000 003 AVA
IST168I GRP1                                      005 000 003 AVA
IST1317I DLCADDR SUBFIELDS FOR PID: 004
IST1318I 1,C'TR'
IST1318I 20,C'9192545056'
IST1317I DLCADDR SUBFIELDS FOR PID: 005
```

```
IST1318I 1,C'SAMPLE'
IST1318I 20,C'1234567890ABCDEFGHIJKLMNOPQRSTUVWXYZ1234567890123456789
IST1319I    01234567890123456789O'
IST314I END
```

DISPLAY PATHTAB command

```
►►──DISPLAY NET,PATHTAB──┬──────────────────────────┬──────────────────────────►
                         ├─,ADJSUB=subarea_number───┤
                         └─,DESTSUB=subarea_number──┘

   ┌─,MAX=DSPLYDEF_start_option_value─┐
►──┤                                  ├──────────────────────────────────────►◄
   └─,MAX=──┬─*──────────────────────┬─┘
            └─number_of_resources────┘
```

Abbreviations

Operand	Abbreviation
DISPLAY	D

Purpose

The DISPLAY PATHTAB (path table) command displays the status of explicit routes and their associated virtual routes for this host. You can use this command to display information about all routes, or you can limit it by specifying the ADJSUB or DESTSUB operands. The DISPLAY PATHTAB command provides information similar to the “DISPLAY ROUTE command” on page 163, but in a different format. However, the DISPLAY ROUTE command provides some additional information not provided by the DISPLAY PATHTAB command.

Operands

ADJSUB=subarea_number
Specifies that information about routes *passing through* the named adjacent subarea is the only information to be displayed.

DESTSUB=subarea_number
Specifies that information about routes *going to* the named destination subarea is the only information to be displayed.

MAX
Specifies the maximum number of routes that VTAM displays for this command.

MAX=*
Specifies that the value of the DSPLYMAX start option is used to limit the display output.

MAX=number_of_resources
Specifies the number of routes to display for this command. The valid range is 1–value of DSPLYMAX. The default is the value specified for the DSPLYDEF start option.

Specifying MAX limits the display output. VTAM searches only for the number of instances that you have specified. When that number is found, VTAM does not search any further. This saves processing time for the command and gives you control over the amount of display output generated by the command. If fewer routes are found than you have specified on MAX, VTAM displays only the routes that are found.

Resulting display

The resulting display shows the host path table contents. Included in the display are the destination subarea, the adjacent subarea (through which the listed explicit route flows), the explicit route number, the status (the current state of the listed explicit route as known to the host), the virtual route number, and the transmission group number.

Examples

Displaying routes going to a destination subarea:

```
d net,pathtab,destsub=2
IST097I DISPLAY ACCEPTED
IST350I DISPLAY TYPE = PATH TABLE CONTENTS
IST516I DESTSUB   ADJSUB TGN  ER  ER STATUS   VR(S)
IST517I       2        4   1   5   INOP           1
IST517I       2        4   1   2   INACT          0
IST517I       2        4   1   1   INOP           2
IST517I       2        4   1   0   INOP           3
IST517I       2        4   1   3   PDEFO
IST517I       2        4   1   4   PDEFO
IST517I       2        4   1   6   PDEFO
IST1454I 7 PATH(S) DISPLAYED
IST314I END
```

Displaying routes passing through an adjacent subarea:

```
d net,pathtab,adjsub=310
IST097I DISPLAY  ACCEPTED
IST350I DISPLAY TYPE = PATH TABLE CONTENTS
IST516I DESTSUB   ADJSUB TGN  ER  ER STATUS   VR(S)
IST517I       1      310   1   4   INOP           2
IST517I       1      310   1   3   INOP           3
IST517I       1      310   1   0   INACT          0
IST517I       1      310   1   1   PDEFO
IST517I       2      310   1   4   INOP           3
IST517I       2      310   1   3   INOP           4
IST517I       2      310   1   0   INACT          0
IST517I       2      310   1   1   PDEFO
IST517I       2      310   1   5   PDEFO
IST517I       3      310   1   5   INOP           2
IST517I       3      310   1   3   INOP           3
IST517I       3      310   1   2   INOP           1
IST517I       4      310   1   5   INOP           3
IST517I       4      310   1   3   INOP           2
IST517I       4      310   1   0   INACT          0
IST517I       4      310   1   1   PDEFO
IST517I     310      310   1  14   PDEFO
IST517I     310      310   1  15   PDEFO
IST1454I 18 PATH(S) DISPLAYED
IST314I END
```

DISPLAY PENDING command

```
►►─DISPLAY NET,PENDING──┬──────────────────────────────┬──────────────────────────►
                        └─,ID=─┬─name──────────────────┘
                               │      ┌─,─┐
                               └─(────┴─name─┴─)──────┘

►─┬─,MAX=DSPLYDEF_start_option_value─┬──────────────────────────────────────────►◄
  └─,MAX=─┬─*──────────────────────┬─┘
          └─number_of_resources────┘
```

Abbreviations

Operand	Abbreviation
DISPLAY	D

Purpose

The DISPLAY PENDING command displays information about resources in the domain that are in a “pending” state. A resource can be a major node, a minor node, an application program, a PU, or an LU.

You can limit the amount of display output (and the amount of time to process this command) by specifying one or more resources on the ID operand whose pending subordinate resources are to be displayed.

Attention: If you leave out the ID operand, this command causes VTAM to check every resource and could have an adverse effect on VTAM performance.

A pending state is:

- A transient state to or from a fully active state
- A state of “recovery pending” or “recovery in progress” for application programs that have been retained due to the failure or takeover of an application program enabled for persistence. To observe these recovery states, enter the DISPLAY command on the system in which the application program resides.

Operands

ID=name
Specifies the name of one or more active major nodes, groups, lines, or PUs whose pending resources are to be displayed.

MAX
Specifies the maximum number of resources that VTAM displays for this command.

MAX=*
Specifies that the value of the DSPLYMAX start option is used to limit the display output.

MAX=number_of_resources
Specifies the number of resources that VTAM displays for this command. The valid range is 1–value of DSPLYMAX. The default is the value specified for the DSPLYDEF start option.

Specifying MAX limits the display output. VTAM searches only for the number of instances that you have specified. When that number is found, VTAM does not search any further. This saves processing time for the command and gives you control over the amount of display output generated by the command. If fewer resources are found than you have specified on MAX, VTAM displays only the resources that are found.

Resulting display

The resulting display shows the name and status of each node in a pending state.

Examples

Displaying all nodes in a pending state:

```
d net,pending
IST097I DISPLAY ACCEPTED
IST350I DISPLAY TYPE = PENDING
IST159I THE FOLLOWING NODES ARE IN A PENDING STATE
IST080I C04T0011 PACTL      C04T0012 PACTL      C04T0013 PACTL
IST080I C04T0014 PACTL      C04T0015 PACTL      C04T0021 PACTL
IST080I C04T0025 PACTL
IST1454I 7 RESOURCE(S) DISPLAYED
IST314I END
```

Displaying all nodes under a specific resource that are in a pending state:

```
d net,pending,id=a0362zc
IST097I DISPLAY  ACCEPTED
IST350I DISPLAY TYPE = PENDING
IST089I A0362ZC  TYPE = PU T4/5          , ACTIV
IST159I THE FOLLOWING NODES ARE IN A PENDING STATE
IST080I A03P161  PREQC      A03P162  PREQC      A03P163  PREQC
IST080I A03P164  PREQC      A03P165  PREQC      A03P166  PREQC
IST080I A03P167  PREQC      A03P168  PREQC      A03P169  PREQC
IST080I A03P16A  PREQC      A03P16B  PREQC      A03P16C  PREQC
IST080I A03P201  PREQC      A03P202  PREQC      A03P203  PREQC
IST080I A03P204  PREQC      A03P205  PREQC      A03P206  PREQC
IST080I A03P207  PREQC      A03P208  PREQC      A03P209  PREQC
IST080I A03P20A  PREQC      A03P20B  PREQC      A03P20C  PREQC
IST1454I 24 RESOURCE(S) DISPLAYED FOR ID=A0362ZC
IST314I END
```

DISPLAY ROUTE command

Displaying the status of routes:

```
►►──DISPLAY NET,ROUTE──,DESTSUB=subarea_number──┬─,ER=ALL──────────┬──────────────►
                                                ├─,COSNAME=name────┤
                                                ├─,ER=ALL──────────┤
                                                ├─,ER=er_number────┤
                                                └─,VR=vr_number────┘

►──┬─────────────────┬──┬──────────────────────┬──┬─────────────┬──┬──────────────►◄
   └─,NETID=netid────┘  ├─,ORIGIN=subarea_pu_name┤  ├─,TEST=NO───┤
                        └─,ORIGIN=ALL───────────┘  └─,TEST=──┬─NO─┬┘
                                                             └─YES┘
```

Displaying blocked virtual routes:

```
►►──DISPLAY NET,ROUTE──,BLOCKED──┬──────────────────────┬──────────────────────►
                                 │                (1)   │
                                 └─,NETID=netid──────────┘

►──┬──────────────────────┬──────────────────────────────────────────────────►◄
   ├─,ORIGIN=subarea_pu_name┤
   └─,ORIGIN=ALL───────────┘
```

Notes:

1 When the BLOCKED operand is specified, the NETID of the host where the command was entered is assumed, and specification of another NETID is not permitted.

Displaying held virtual routes:

```
►►──DISPLAY NET,ROUTE──,HELD──────────────────────────────────────────────►◄
```

Abbreviations

Operand	Abbreviation
DISPLAY	D
DESTSUB	DESTSA

Purpose

The DISPLAY ROUTE command displays the status of explicit routes and virtual routes and tests whether a route is operational.

Operands

Route selection

Specifies which explicit routes or virtual routes are to be displayed. A blank COS entry is used when no COSNAME entry has been coded in the LOGMODE table for LU-LU sessions or when an ISTVTCOS entry for SSCP-type sessions cannot be found.

BLOCKED
Displays the blocked Virtual Routes from the PU specified in ORIGIN for all destination Subarea combinations known to VTAM through its current PATH table.

COSNAME=name
Specifies a Class of Service name. If this operand is specified, all virtual routes to the specified destination subarea within this Class of Service are displayed.

The Class of Service table associated with the origin node (where applicable) and the *netid* specified in the ORIGIN and NETID operands are used to resolve the Class of Service name to a list of virtual routes.

If COSNAME is specified, neither the BLOCKED, ER nor the VR operands can be specified.

DESTSUB=subarea_number
Specifies the subarea address of the destination subarea of the routes to be displayed.

The BLOCKED and DESTSUB operands are mutually exclusive.

ER=er_number
Specifies the explicit route number (an integer 0–15). If this operand is specified, all the explicit routes identified by this explicit route number that are defined to VTAM through activation of a path definition statement are displayed. An explicit route becomes known to VTAM either by having been defined at one time (through the activation of a path definition set defining the ER), or by having been operative at one time (through the receipt of an ER_OP request unit from the network).

If ER is specified, neither the BLOCKED, COSNAME nor the VR operands can be specified.

ER=ALL
Specifies that every explicit route to the specified destination subarea is to be displayed.

If ER is specified, neither the BLOCKED, COSNAME nor the VR operands can be specified.

If COSNAME, ER, or VR options are not specified, then ER=ALL is assumed.

VR=vr_number
Specifies the virtual route number (an integer 0–7). If this operand is specified, the virtual routes identified by this virtual route number to the specified destination subarea are displayed. There can be up to three virtual routes identified by the virtual route number, with one route for each of the three transmission priority levels.

If VR is specified, neither the BLOCKED, COSNAME, nor the ER operands may be specified.

HELD
Displays the held virtual routes for the virtual routes that originate in VTAM. When this command is used, no other keywords are permitted. The NETID and ORIGIN of the host where the command was entered is assumed.

Note: Held virtual routes have a status of active.

NETID=netid

Specifies the network attached to the origin node that contains the routes. VTAM sends the requested NETID to the origin node in the route test request. The request succeeds if the origin node can recognize the NETID. NETID is a required start option.

If the *netid* specified is not the network in which the command is issued, or the host is not gateway capable, the ORIGIN operand is required for the command to succeed.

If you do not specify a NETID, the default is the network identifier supplied by the NETID option at start time.

When the BLOCKED operand is specified, the NETID of the host where the command was entered is assumed and specification of another NETID is not permitted.

ORIGIN=ALL

Used with the BLOCKED operand. Specifies that all PU type 4 and 5 nodes that serve as an origin of a route should be checked for blocked Virtual Routes. As in the case where the subarea_pu_name is specified, VTAM must have an SSCP-PU session with this node to forward a route display request to the node.

Warning: The use of this operand may have a significant performance impact depending on the number of NCPs and destination subareas in the network. Therefore, it is recommended that this operand only be used when the diagnostic advantage is preferred over the performance impact.

Note: Specifying an ORIGIN by name, instead of using ORIGIN=ALL, will greatly reduce the performance impact.

ORIGIN=subarea_pu_name

Specifies the node where the route starts. VTAM must have an SSCP-PU session with this node to forward the route display request to the node. In addition, the node must be an NCP subarea node or the host physical unit name (as specified in the HOSTPU start option). The command fails if you specify an external host subarea node because VTAM has no SSCP-PU session with the physical unit in another host subarea.

The default for the ORIGIN operand is the host physical unit specified in the HOSTPU start option.

TEST

Specifies whether an explicit route test is to be performed for a route to a destination subarea. Testing is not supported for APPN routes.

If TEST is specified, the BLOCKED operand can not be specified.

TEST=YES

Specifies that VTAM is to perform an explicit route test for each explicit route contained in the requested display. That is, if the VR operand is specified, the explicit route defined to be used by the specified virtual route is tested; if the COSNAME operand is specified, those explicit routes defined to be used by the virtual routes within the specified Class of Service are tested. When the test results are received, these test results are sent to the operator that requested the display; however, these test results are sent separately from the initial display results. The test results include a display number that allows the results to be correlated to the original status display.

For an explicit route to be tested, it must be known to VTAM, either by having been defined at one time (through the activation of a path definition

set defining the ER), or by having been operative at one time (through the receipt of an ER_OP request unit from the network).

If a node or link along a route becomes inoperative after the ER test request unit has been sent, VTAM might never receive any test results for that explicit route.

TEST=NO
Specifies that the requested route status is to be displayed, but that no explicit route test is to be performed.

Resulting display

The resulting display shows:

- The subarea number of the nodes
- The origin of the physical unit (PU) name (if known)
- The destination of the PU name (if known)
- The network ID (where applicable) of the network attached to the origin PU that contains the routes
- The virtual route
- The transmission priority, status, explicit route number, adjacent subarea and its status, and the transmission group number

Examples

Displaying one virtual route to a destination subarea:

```
d net,route,destsub=01,netid=netc,origin=c0453le,vr=0
IST097I DISPLAY ACCEPTED
IST535I ROUTE DISPLAY 8  FROM SA 4 TO SA 1
IST808I ORIGIN PU = C0453LE DEST PU = C01NPU   NETID = NETC
IST536I VR  TP    STATUS   ER       ADJSUB  TGN  STATUS  CUR MIN MAX
IST537I  0   0    ACTIV     5            1    1  ACTIV3
IST537I  0   1    INACT     5            1    1  ACTIV3
IST537I  0   2    INACT     5            1    1  ACTIV3
IST314I END
```

Displaying one explicit route to a destination subarea:

```
d net,route,destsub=01,netid=netc,origin=a03n43a,er=5
IST097I DISPLAY ACCEPTED
IST535I ROUTE DISPLAY 7  FROM SA 4 TO SA 1
IST808I ORIGIN PU = C0453LE DEST PU = C01NPU   NETID = NETC
IST536I VR  TP    STATUS   ER       ADJSUB  TGN  STATUS  CUR MIN MAX
IST537I  0   0    ACTIV     5            1    1  ACTIV3
IST537I  0   1    INACT     5            1    1  ACTIV3
IST537I  0   2    INACT     5            1    1  ACTIV3
IST314I END
```

Displaying all virtual routes in a Class of Service to a destination subarea:

```
d net,route,destsub=01,netid=netc,origin=a0362zc,cosname=ist
IST097I DISPLAY  ACCEPTED
IST535I ROUTE DISPLAY 4  FROM SA         31 TO SA          1
IST808I ORIGIN PU = A0362ZC DEST PU = ***NA*** NETID = NETC
IST536I VR  TP    STATUS   ER       ADJSUB  TGN  STATUS  CUR MIN MAX
IST537I  0   2    ACTIV     0            1    1  ACTIV3
IST537I  1   2    INACT     1            1    1  ACTIV1
IST537I  2   2    INACT     2            1    1  ACTIV1
IST537I  3   2    INACT     3            1    1  ACTIV1
IST537I  4   2    INACT     4            1    1  ACTIV1
IST537I  5   2    UNDEF
IST537I  6   2    UNDEF
IST537I  7   2    UNDEF
```

```
IST537I  0   1    INACT     0            1    1  ACTIV3
IST537I  1   1    INACT     1            1    1  ACTIV1
IST537I  2   1    INACT     2            1    1  ACTIV1
IST537I  3   1    INACT     3            1    1  ACTIV1
IST537I  4   1    INACT     4            1    1  ACTIV1
IST537I  5   1    UNDEF
IST537I  6   1    UNDEF
IST537I  7   1    UNDEF
IST537I  0   0    ACTIV     0            1    1  ACTIV3
IST537I  1   0    INACT     1            1    1  ACTIV1
IST537I  2   0    INACT     2            1    1  ACTIV1
IST537I  3   0    INACT     3            1    1  ACTIV1
IST537I  4   0    INACT     4            1    1  ACTIV1
IST537I  5   0    UNDEF
IST537I  6   0    UNDEF
IST537I  7   0    UNDEF
IST314I END
```

Displaying and testing all virtual routes in a Class of Service to a destination subarea:

```
d net,route,destsub=01,netid=netc,origin=a0362zc,cosname=ist,test=yes
IST097I DISPLAY  ACCEPTED
IST535I ROUTE DISPLAY 6  FROM SA         31 TO SA          1
IST808I ORIGIN PU = A0362ZC DEST PU = ***NA*** NETID = NETC
IST536I VR  TP    STATUS   ER       ADJSUB  TGN  STATUS  CUR MIN MAX
IST537I  0   2    ACTIV     0            1    1  ACTIV3
IST537I  1   2    INACT     1            1    1  ACTIV1
IST537I  2   2    INACT     2            1    1  ACTIV1
IST537I  3   2    INACT     3            1    1  ACTIV1
IST537I  4   2    INACT     4            1    1  ACTIV1
IST537I  5   2    UNDEF
IST537I  6   2    UNDEF
IST537I  7   2    UNDEF
IST537I  0   1    INACT     0            1    1  ACTIV3
IST537I  1   1    INACT     1            1    1  ACTIV1
IST537I  2   1    INACT     2            1    1  ACTIV1
IST537I  3   1    INACT     3            1    1  ACTIV1
IST537I  4   1    INACT     4            1    1  ACTIV1
IST537I  5   1    UNDEF
IST537I  6   1    UNDEF
IST537I  7   1    UNDEF
IST537I  0   0    ACTIV     0            1    1  ACTIV3
IST537I  1   0    INACT     1            1    1  ACTIV1
IST537I  2   0    INACT     2            1    1  ACTIV1
IST537I  3   0    INACT     3            1    1  ACTIV1
IST537I  4   0    INACT     4            1    1  ACTIV1
IST314I END
IST538I ROUTE TEST   6 IN PROGRESS
IST533I ER  0 SUCCEEDED IN ROUTE TEST   6
IST797I            FROM   VIA     ADJACENT         DEST     ER LENGTH
IST644I         A0362ZC    TG     ***NA***     ***NA***
IST533I ER  0 SUCCEEDED IN ROUTE TEST   6
IST534I              31     1            1            1             1
IST798I            NETC
IST533I ER  1 SUCCEEDED IN ROUTE TEST   6
IST797I            FROM   VIA     ADJACENT         DEST     ER LENGTH
IST644I         A0362ZC    TG     ***NA***     ***NA***
IST534I              31     1            1            1             1
IST798I            NETC
IST533I ER  2 SUCCEEDED IN ROUTE TEST   6
IST797I            FROM   VIA     ADJACENT         DEST     ER LENGTH
IST644I         A0362ZC    TG     ***NA***     ***NA***
IST534I              31     1            1            1             1
IST798I            NETC
IST314I END
```

Displaying and testing one explicit route to a destination subarea:

```
d net,route,destsub=01,netid=netc,origin=c0453le,er=5,test=yes
IST097I DISPLAY ACCEPTED
IST535I ROUTE DISPLAY 11 FROM SA 4 TO SA 1
IST808I ORIGIN PU = C0453LE DEST PU = C01NPU   NETID = NETC
IST536I VR  TP    STATUS   ER       ADJSUB  TGN  STATUS  CUR MIN MAX
IST537I  0   0    ACTIV     5            1    1  ACTIV3
IST537I  0   1    INACT     5            1    1  ACTIV3
IST537I  0   2    INACT     5            1    1  ACTIV3
IST314I END
```

Displaying and testing all explicit routes to a destination subarea:

```
d net,route,destsub=01,netid=netc,origin=a0362zc,test=yes
IST097I DISPLAY  ACCEPTED
IST535I ROUTE DISPLAY 8  FROM SA         31 TO SA          1
IST808I ORIGIN PU = A0362ZC DEST PU = ***NA*** NETID = NETC
IST536I VR  TP    STATUS   ER       ADJSUB  TGN  STATUS  CUR MIN MAX
IST537I  0   0    ACTIV     0            1    1  ACTIV3
IST537I  0   1    INACT     0            1    1  ACTIV3
IST537I  0   2    ACTIV     0            1    1  ACTIV3
IST537I  1   0    INACT     1            1    1  ACTIV1
IST537I  1   1    INACT     1            1    1  ACTIV1
IST537I  1   2    INACT     1            1    1  ACTIV1
IST537I  2   0    INACT     2            1    1  ACTIV1
IST537I  2   1    INACT     2            1    1  ACTIV1
IST537I  2   2    INACT     2            1    1  ACTIV1
IST537I  3   0    INACT     3            1    1  ACTIV1
IST537I  3   1    INACT     3            1    1  ACTIV1
IST537I  3   2    INACT     3            1    1  ACTIV1
IST537I  4   0    INACT     4            1    1  ACTIV1
IST537I  4   1    INACT     4            1    1  ACTIV1
IST537I  4   2    INACT     4            1    1  ACTIV1
IST314I END
IST538I ROUTE TEST   8 IN PROGRESS
IST533I ER  0 SUCCEEDED IN ROUTE TEST   8
IST797I            FROM   VIA     ADJACENT         DEST     ER LENGTH
IST644I         A0362ZC    TG     ***NA***     ***NA***
IST533I ER  0 SUCCEEDED IN ROUTE TEST   8
IST534I              31     1            1            1             1
IST798I            NETC
IST533I ER  1 SUCCEEDED IN ROUTE TEST   8
IST797I            FROM   VIA     ADJACENT         DEST     ER LENGTH
IST644I         A0362ZC    TG     ***NA***     ***NA***
IST534I              31     1            1            1             1
IST798I            NETC
IST533I ER  2 SUCCEEDED IN ROUTE TEST   8
IST797I            FROM   VIA     ADJACENT         DEST     ER LENGTH
IST644I         A0362ZC    TG     ***NA***     ***NA***
IST534I              31     1            1            1             1
IST798I            NETC
IST314I END
```

Displaying blocked virtual routes from one origin PU:

```
d net,route,blocked,origin=ISTPUS
IST097I DISPLAY ACCEPTED
IST350I DISPLAY TYPE = BLOCKED VIRTUAL ROUTES
IST535I ROUTE DISPLAY 1 FROM SA 1 TO SA 1
IST808I ORIGIN PU = ISTPUS DEST PU = NCP2B   NETID = NETA
IST536I VR  TP    STATUS   ER       ADJSUB  TGN  STATUS  CUR MIN
IST537I  0   0    BLCKD     0            1    1  ACTIV3
IST537I  0   1    BLCKD     0            1    1  ACTIV3
IST537I  0   2    BLCKD     0            1    1  ACTIV3
IST314I END
IST535I ROUTE DISPLAY 1 FROM SA 1 TO SA 2
IST808I ORIGIN PU = ISTPUS DEST PU = NCP4D   NETID = NETA
```

```
IST536I VR  TP    STATUS   ER       ADJSUB  TGN  STATUS  CUR MIN
IST537I  3   1    BLCKD     0            4    1  ACTIV3
IST537I  3   2    BLCKD     0            4    1  ACTIV3
IST537I  4   0    BLCKD     1            3    1  ACTIV3
IST537I  4   1    BLCKD     1            3    1  ACTIV3
IST314I END
```

Displaying blocked virtual routes from one origin with no blocked routes found:

```
d net,route,blocked,origin=ISTPUS
IST097I DISPLAY ACCEPTED
IST350I DISPLAY TYPE = BLOCKED VIRTUAL ROUTES
IST172I NO BLOCKED VIRTUAL ROUTE
IST314I END
```

Displaying held virtual routes with no held routes found:

```
d net,route,held
IST097I DISPLAY ACCEPTED
IST350I DISPLAY TYPE = HELD VIRTUAL ROUTES
IST172I NO HELD VIRTUAL ROUTE
IST314I END
```

DISPLAY RSCLIST command

```
                                                  (1)
►►──DISPLAY NET,RSCLIST──,ID=──┬─name──────────┬──┬──────────────────────────────────┬──►
                               └─(─name─)──────┘  └─,EXCLUDE=──┬─name──────────────┬─┘
                                                               └─(──┬──,──┬──name──)─┘
                                                                    ◄───┘

►──┬──────────────────────┬──┬──────────────────────────────────────────────────┬──►
   └─,MAJNODE=nodename────┘  └─,MAX=──┬─DSPLYDEF_start_option_value─┬──┬─*──────────┬─┘
                                      └─number_of_resources─────────┘  └─number_of_resources─┘

   ┌─,SCOPE=ALL──────────────┐
►──┼──────────────────────────┼──────────────────────────────────────────────────►◄
   └─,SCOPE=──┬─ALL──────────┬─┘
              │              │
              ├─ACT──────────┤
              ├─ACTONLY──────┤
              ├─ACTSESS──────┤
              ├─ALL──────────┤
              ├─CONCT────────┤
              ├─INACT────────┤
              ├─INACTONLY────┤
              ├─PENDING──────┤
              ├─RELSD────────┤
              └─RESET────────┘
```

Notes:

1 Depending on the value of the DSPLYWLD start option, wildcard values can be used for this operand.

```
                ┌─,IDTYPE=*──────────────┐
►►──────────────┤                        ├──────────────────────────────────────►◄
                └─,IDTYPE=─┬─ADJCPS────┬─┘
                           ├─ADJCPSEG──┤
                           ├─APPLDYN───┤
                           ├─APPLMOD───┤
                           ├─APPLS─────┤
                           ├─APPLSEG───┤
                           ├─CDRMS─────┤
                           ├─CDRMSEG───┤
                           ├─CDRSCS────┤
                           ├─CDRSCSEG──┤
                           ├─CLSTRS────┤
                           ├─DLURS─────┤
                           ├─GENERIC───┤
                           ├─GROUPS────┤
                           ├─LCLSNA────┤
                           ├─LCL3270───┤
                           ├─LINES─────┤
                           ├─LINKSTA───┤
                           ├─LUGROUPS──┤
                           ├─MAJNODES──┤
                           ├─MODELSEG──┤
                           ├─PUT45─────┤
                           ├─SWSEG─────┤
                           ├─TCPIPSEG──┤
                           ├─TERMS─────┤
                           ├─TRLSEG────┤
                           ├─XCASEG────┤
                           └─*─────────┘
```

Abbreviations

Operand	Abbreviation
DISPLAY	D
SCOPE=ACT	ACT or A
SCOPE=ACTONLY	ACTONLY
SCOPE=ACTSESS	ACTSESS
SCOPE=ALL	EVERY or E
SCOPE=CONCT	CONCT
SCOPE=INACT	INACT or I
SCOPE=INACTONLY	INACTONL
SCOPE=PENDING	PEND
SCOPE=RELSD	RELSD
SCOPE=RESET	RESET

When using abbreviations in commands, code the abbreviation exactly as shown in the table. Do not use the operand name in the command unless it is shown as part of the abbreviation in the table. For example, when coding the abbreviation for SCOPE=ALL, use E or EVERY. SCOPE=E is not a valid option.

Purpose

The DISPLAY RSCLIST command displays information about resources whose names match a particular pattern.

Operands

EXCLUDE=name

Specifies a maximum of five names or patterns of resources to be excluded from the display. The names or patterns can be network-qualified. If you do not specify the network identifier, VTAM uses the identifier of the host from which you are issuing the command.

You can specify wildcard values for this operand, but * and *.* are not valid for the list of resources to be excluded. For more information about using wildcards, see “Using wildcard names” on page 11.

ID=name

Specifies the name of one or more resources to be displayed. The resource name can be network-qualified. If you do not specify the network identifier, VTAM uses the identifier of the host from which you are issuing the command.

You can specify * as the network ID portion of a network-qualified name. The * is useful for displaying information about a resource for which you do not know the network ID. The * is also useful for displaying information about several resources with the same name that are found in multiple networks, provided that you also specify the MAX operand on the command.

Depending on the value of the DSPLYWLD start option, wildcard values can be used for this operand. For more information about using wildcards, see “Using wildcard names” on page 11.

Attention: Specifying a wildcard name might degrade performance because VTAM checks every resource in the network, depending on the value of the IDTYPE operand.

Note: If model application program definition names match the pattern you specify on the ID operand of the DISPLAY RSCLIST command when IDTYPE specifies * or APPLS, those model application program names will appear in your display output. In addition, any dynamic application programs built from those model application program definitions will also appear in your display output.

A model application program will be identified in the TYPE column of message IST1418I as MODEL APPL. A dynamic application program will be identified in the TYPE column of message IST1418I as DYNAMIC APPL.

For example, if you issue the following command:

```
DISPLAY NET,RSCLIST,ID=APPL*,IDTYPE=APPLS
```

and model application programs have been defined using names that match the pattern specified on the ID operand (APPL*), you will get the following output:

```
IST097I DISPLAY ACCEPTED
IST350I DISPLAY TYPE = RSCLIST
IST1417I NETID    NAME     STATUS     TYPE              MAJNODE
IST1418I NETA     APPLA*   CONCT      MODEL APPL        APPL1A
IST1418I NETA     APPLQ?   CONCT      MODEL APPL        APPL1A
IST1418I NETA     APPL1    ACT/S      APPL              APPL1A
```

```
IST1418I NETA     APPLA01  ACTIV--S-- DYNAMIC APPL      APPL1A
IST1418I NETA     APPLQ1   ACTIV--S-- DYNAMIC APPL      APPL1A
IST1454I 5 RESOURCE(S) DISPLAYED FOR ID=APPL*
IST314I END
```

The wildcard character used in APPL* on the ID operand of the DISPLAY RSCLIST command tells VTAM to display any resource whose name begins with APPL, followed by zero to four valid characters in length. The names APPLA* and APPLQ?, even though they contain wildcard characters, both begin with APPL, followed by zero to four valid characters in length (* and ? are valid characters in an application program minor node name). Therefore, they are included in the display output, as are the dynamic application programs (APPLA01 and APPLQ1) built from APPLA* and APPLQ?.

To limit the display to model application program definitions, specify IDTYPE=APPLMOD when you issue the DISPLAY RSCLIST command. To limit the display to dynamic application programs, specify IDTYPE=APPLDYN when you issue the DISPLAY RSCLIST command.

IDTYPE
Specifies the type of resource that the ID operand names. If several types of resources share the same name, IDTYPE can be used to identify which resource the command should act on. The default is IDTYPE=*.

IDTYPE=ADJCPS
Displays only adjacent control points.

IDTYPE=ADJCPSEG
Displays only adjacent control point major nodes.

IDTYPE=APPLDYN
Displays only dynamic application programs.

IDTYPE=APPLMOD
Displays only model application programs.

IDTYPE=APPLS
Displays only application minor nodes, including model application program definitions and dynamic application programs.

IDTYPE=APPLSEG
Displays only application major nodes.

IDTYPE=CDRMS
Displays only cross-domain resource managers known to this host processor.

IDTYPE=CDRMSEG
Displays only CDRM major nodes.

IDTYPE=CDRSCS
Displays only cross-domain resources known to this domain.

IDTYPE=CDRSCSEG
Displays only CDRSC major nodes.

IDTYPE=CLSTRS
Displays only physical units in this domain.

IDTYPE=DLURS
Displays only dependent LU requesters (DLURs).

IDTYPE=GENERIC
Displays only generic resources.

IDTYPE=GROUPS
Displays only groups in this domain.

IDTYPE=LCLSNA
Displays only local SNA major nodes.

IDTYPE=LCL3270
Displays only local non-SNA major nodes.

IDTYPE=LINES
Displays only lines in this domain.

IDTYPE=LINKSTA
Displays only link stations in this domain.

IDTYPE=LUGROUPS
Displays only LU group major nodes.

IDTYPE=MAJNODES
Displays only major nodes.

IDTYPE=MODELSEG
Displays only model major nodes.

IDTYPE=PUT45
Displays only type 4 and type 5 PUs.

IDTYPE=SWSEG
Displays only switched major nodes.

IDTYPE=TCPIPSEG
Displays only TCP/IP major nodes. This option is used only with the AnyNet® function.

IDTYPE=TERMS
Displays only logical units.

IDTYPE=TRLSEG
Displays only the transport resource list (TRL) major node.

IDTYPE=XCASEG
Displays only external communication adapter (XCA) major nodes.

IDTYPE=*
Displays all resources, including model application program definitions and dynamic application programs.

MAJNODE=nodename
Specifies the name of the major node to be searched for resources matching the ID operand. The nodename cannot be a network-qualified name.

You can specify a wildcard value for the MAJNODE operand. For more information about using wildcards, see “Using wildcard names” on page 11.

MAX
Specifies the maximum number of resources that VTAM displays for this command.

MAX=*
Specifies that the value of the DSPLYMAX start option is used to limit the display output.

MAX=number_of_resources
Specifies the number of resources that VTAM displays for this command. The valid range is 1–value of DSPLYMAX. The default is the value specified for the DSPLYDEF start option.

Specifying MAX limits the display output. VTAM searches only for the number of instances that you have specified. When that number is found, VTAM does not search any further. This saves processing time for the command and gives you control over the amount of display output generated by the command. If fewer resources are found than you have specified on MAX, VTAM displays only the resources that are found.

SCOPE
Specifies the desired scope of the display.

Note: If you specify the SCOPE operand without specifying a value SCOPE=ALL is assumed.

SCOPE=ACT
Specifies that information is to be displayed about all active, pending, and connectable resources. If this display is undesirably large, you can use SCOPE=ACTONLY or SCOPE=CONCT to further limit the display.

SCOPE=ACTONLY
Specifies that information is to be displayed about all resources in an active state. The display does **not** include resources in pending or connectable states. If no resources are found in an active state, you can use SCOPE=ACT to broaden the scope of the display to active, connectable, and pending resources.

SCOPE=ACTSESS
Specifies that information is to be displayed about all resources that are active with sessions.

SCOPE=ALL
Specifies that information is to be displayed about all resources (regardless of their status).

SCOPE=CONCT
Specifies that information is to be displayed about all resources in a CONCT (connectable) state. If no applications are found in a connectable state, you can use SCOPE=ACT to broaden the scope of the display to active, connectable, and pending resources.

SCOPE=INACT
Specifies that information is to be displayed about all inactive resources. If this display is undesirably large, you can use SCOPE=INACTONLY or SCOPE=RESET to further limit the display.

SCOPE=INACTONLY
Specifies that information is to be displayed about all inactive resources. Resources in a RESET state are not included in the SCOPE=INACTONLY display.

SCOPE=PENDING
Specifies that information is to be displayed about all pending resources. A pending state is a transient state to or from the fully active state.

SCOPE=RELSD
Specifies that the information is to be displayed about all PUs in a RELSD state within the specified major nodes.

SCOPE=RESET
Specifies that information is to be displayed about all resources in a RESET state.

Resulting display

The resulting VTAM display shows:

- The NETID and name of each resource that matches the pattern specified on the ID operand and the status specified on the SCOPE operand
- The current resource status
- The resource type
- The name of the major node where the resource is defined

Note: If model application program definitions are included in the display, any dynamic application programs built from those models that have been deactivated are not displayed. This is because dynamic application programs cannot exist in an inactive state. When a dynamic application program is deactivated and CLOSE macro processing is complete for the dynamic application program, the definition of the dynamic application program is deleted. The dynamic application program is no longer known by VTAM and will not appear in the output of any DISPLAY commands.

Examples

Displaying all active resources in this network with names starting with “app”, including dynamic application programs built from model application program definitions. Note that model application programs do not appear in the display output because they are always in a connectable (CONCT) state.

```
d net,rsclist,id=app*,scope=actonly
IST097I DISPLAY ACCEPTED
IST350I DISPLAY TYPE = RSCLIST
IST1417I NETID    NAME     STATUS     TYPE              MAJNODE
IST1418I NETA     APPLAA3  ACTIV      CDRSC             ISTPDILU
IST1418I NETA     APPLAA2  ACTIV      CDRSC             ISTPDILU
IST1418I NETA     APPLCA1  ACT/S----Y CDRSC             ISTCDRDY
IST1418I NETA     APPLBA1  ACT/S----Y CDRSC             ISTCDRDY
IST1418I NETA     APPLDA1  ACT/S----Y CDRSC             ISTCDRDY
IST1418I NETA     APPL1A   ACTIV      APPL SEGMENT      APPL1A
IST1418I NETA     APPL1    ACT/S      APPL              APPL1A
IST1418I NETA     APPL8    ACTIV--S-- CDRSC             CDRSC1A
IST1418I NETA     APPLAA1  ACTIV      CDRSC             CDRSC1A
IST1418I NETA     APPLA01  ACTIV--S-- DYNAMIC APPL      APPL1A
IST1418I NETA     APPLQ1   ACTIV--S-- DYNAMIC APPL      APPL1A
IST1454I 11 RESOURCE(S) DISPLAYED FOR ID=APP*
IST314I END
```

Displaying all active, pending, and connectable resources in this network with names starting with “app”, including model application programs and dynamic application programs built from those models:

```
d net,rsclist,id=app*,scope=act
IST097I DISPLAY ACCEPTED
IST350I DISPLAY TYPE = RSCLIST
IST1417I NETID    NAME     STATUS     TYPE              MAJNODE
IST1418I NETA     APPLAA3  ACTIV      CDRSC             ISTPDILU
IST1418I NETA     APPLAA2  ACTIV      CDRSC             ISTPDILU
IST1418I NETA     APPLCA1  ACT/S----Y CDRSC             ISTCDRDY
IST1418I NETA     APPLBA1  ACT/S----Y CDRSC             ISTCDRDY
IST1418I NETA     APPLDA1  ACT/S----Y CDRSC             ISTCDRDY
IST1418I NETA     APPL1A   ACTIV      APPL SEGMENT      APPL1A
IST1418I NETA     APPLA*   CONCT      MODEL APPL        APPL1A
```

```
IST1418I NETA     APPLQ?   CONCT      MODEL APPL        APPL1A
IST1418I NETA     APPL1    ACT/S      APPL              APPL1A
IST1418I NETA     APPLQ1   ACTIV--S-- DYNAMIC APPL      APPL1A
IST1418I NETA     APPLA01  ACTIV--S-- DYNAMIC APPL      APPL1A
IST1418I NETA     APPL8    ACTIV--S-- CDRSC             CDRSC1A
IST1418I NETA     APPLAA1  ACTIV      CDRSC             CDRSC1A
IST1454I 13 RESOURCE(S) DISPLAYED FOR ID=APP*
IST314I END
```

Displaying all model application program definitions in this network with names starting with “app”:

```
d net,rsclist,id=app*,idtype=applmod,scope=all
IST097I DISPLAY ACCEPTED
IST350I DISPLAY TYPE = RSCLIST
IST1418I NETA     APPLA*   CONCT      MODEL APPL        APPL1A
IST1418I NETA     APPLQ?   CONCT      MODEL APPL        APPL1A
IST1454I 2 RESOURCE(S) DISPLAYED FOR ID=APP*
IST314I END
```

Displaying all dynamic application programs in this network built from model application program definitions whose names start with “app”:

```
d net,rsclist,id=app*,idtype=appldyn,scope=all
IST097I DISPLAY ACCEPTED
IST350I DISPLAY TYPE = RSCLIST
IST1418I NETA     APPLQ1   ACTIV--S-- DYNAMIC APPL      APPL1A
IST1418I NETA     APPLA01  ACTIV--S-- DYNAMIC APPL      APPL1A
IST1454I 2 RESOURCE(S) DISPLAYED FOR ID=APP*
IST314I END
```

Displaying resources in this network with names starting with “app”, limiting output to 6 resources:

```
d net,rsclist,id=app*,max=6
IST097I DISPLAY ACCEPTED
IST350I DISPLAY TYPE = RSCLIST
IST1417I NETID    NAME     STATUS     TYPE              MAJNODE
IST1418I NETA     APPLAA3  ACTIV      CDRSC             ISTPDILU
IST1418I NETA     APPLAA2  ACTIV      CDRSC             ISTPDILU
IST1418I NETA     APPLCA1  ACT/S----Y CDRSC             ISTCDRDY
IST1418I NETA     APPLBA1  ACT/S----Y CDRSC             ISTCDRDY
IST1418I NETA     APPLDA1  ACT/S----Y CDRSC             ISTCDRDY
IST1418I NETA     APPL1A   ACTIV      APPL SEGMENT      APPL1A
IST1315I DISPLAY TRUNCATED AT MAX = 6
IST1454I  6 RESOURCE(S) DISPLAYED FOR ID=APP*
IST314I END
```

Displaying all active rapid transport protocol (RTP) connections for high performance routing (HPR):

```
d net,rsclist,id=cnr*
IST097I DISPLAY ACCEPTED
IST350I DISPLAY TYPE = RSCLIST
IST1417I NETID    NAME     STATUS     TYPE              MAJNODE
IST1418I NETA     CNR00004 ACTIV--LX- PU_T2.1           ISTRTPMN
IST1418I NETA     CNR00003 ACTIV--LX- PU_T2.1           ISTRTPMN
IST1418I NETA     CNR00002 ACTIV--LX- PU_T2.1           ISTRTPMN
IST1418I NETA     CNR00001 ACTIV--LX- PU_T2.1           ISTRTPMN
IST1454I 4 RESOURCE(S) DISPLAYED FOR ID=CNR*
IST314I END
```

DISPLAY RTPS command

```
►►─DISPLAY NET,RTPS──┬──────────────────┬──┬──────────────────┬──────────────────────►
                     └─,APPNCOS=name────┘  └─,CPNAME=name─────┘

►─┬─,CONGEST=ALL──────────┬──┬──────────────────────────────────────────────────────►
  └─,CONGEST=──┬─YES─┬──┬──┘  │                  ┌─,TEST=NO──────────┬──┬
               ├─NO──┤  │     └─,ID=name──────────┤                   │  │
               └─ALL─┘  │                         └─,TEST=──┬─YES─┬───┘  │
                        │                                   └─NO──┘      │

►─┬─,MAX=DSPLYDEF_start_option_value─┬──┬─,SWITCH=ALL──────┬──────────────────────►◄
  └─,MAX=──┬─*──────────────────────┬──┘  └─,SWITCH=──┬─YES─┬──┘
           └─number_of_resources────┘                 ├─NO──┤
                                                      └─ALL─┘
```

Abbreviations

Operand	Abbreviation
DISPLAY	D

Purpose

The DISPLAY RTPS command displays information concerning HPR pipes. The following keywords can be used to limit the display information.

Operands

APPNCOS=name
Specifies the name of a Class of Service (COS) used to establish the HPR pipe.

CPNAME=name
Specifies the name of a CP that is at the other end of the HPR pipe. The name may be network-qualified. If a network identifier is omitted, the host network identifier is assumed.

CONGEST
Specifies whether the display should be restricted.

CONGEST=YES
Displays only pipes that are congested.

CONGEST=NO
Displays only pipes that are not congested.

CONGEST=ALL
Displays all pipes. This is the default value.

Note: HPR pipes in the midst of a path switch are considered congested by VTAM.

ID=*name*
Specifies the name of an RTP PU in this node.

MAX
Specifies the maximum number of HPR pipes to be displayed.

MAX=*
Specifies that the value of the DSPLYMAX start option is used to limit the display output.

MAX=number_of_resources
The range of this keyword is 1 to the value of the DSPLYMAX start option. It is assumed as the value for MAX.

SWITCH
Specifies whether the display should be restricted.

SWITCH=YES
Displays only pipes in the midst of a path switch.

SWITCH=NO
Displays only pipes not in the midst of a path switch.

SWITCH=ALL
Displays all pipes. This is the default value.

Note: HPR pipes in the midst of a path switch are considered congested by VTAM.

TEST
Specifies whether an HPR route test is to be performed.

TEST is only valid if the ID operand is also specified and if the resource identified by the ID operand is an RTP PU in this node.

TEST=YES
Specifies that VTAM is to perform an HPR route test for this RTP PU in addition to displaying the RTP PU status.

The HPR route test is initiated if the RTP PU is connected and is not path switching. When the test results are received, they are provided to the operator console in a separate message group from the initial display output.

TEST=NO
Specifies that the RTP PU status is to be displayed but no HPR route test is to be performed.

Examples

Displaying RTP pipe information:

```
d net,rtps
IST097I DISPLAY ACCEPTED
IST350I DISPLAY TYPE = RTPS
IST1695I PU NAME  CP NAME     COS NAME SWITCH CONGEST SESSIONS
IST1696I CNR00004 NETA.SSCP2A #INTER     NO      NO       5
IST1696I CNR00003 NETA.SSCP2A RSETUP     NO      NO       0
IST1696I CNR00002 NETA.SSCP2A CPSVCMG    NO      NO       1
IST1696I CNR00001 NETA.SSCP2A CPSVCMG    NO      NO       1
IST1454I 4 RTP(S) DISPLAYED
IST314I END
```

Displaying the HPR Route Test using the TEST operand:

```
d net,rtps,id=cnr00004,test=yes
IST097I DISPLAY ACCEPTED
IST350I DISPLAY TYPE =RTPS
IST1695I PU NAME       CP NAME     COS NAME   SWITCH   CONGEST   SESSIONS
```

```
IST1696I CNR00004 NETA.SSCP2A      #INTER     NO       NO        1
IST1786I HPR ROUTE TEST INITIATED FOR RTP PU
IST1454I 1 RTP(S)DISPLAYED
IST314I END
IST1787I HPR ROUTE TEST RESULTS FOR RTP PU CNR00004
IST1788I NODE CP NAME         TG NUMBER     PARTNER CP NAME     INTERNODAL TIME
IST1789I                                                        (MILLISECONDS)
IST1790I NETA.SSCPAA            21          NETA.SSCP1A                    67
IST1790I NETA.SSCP1A            21          NETA.SSCP2A                     3
IST1792I TOTAL RTP TRAVERSAL TIME 70 MILLISECONDS
IST314I END
```

Displaying an RTP pipe using the ID operand:

```
d net,rtps,id=cnr00004
IST097I DISPLAY ACCEPTED
IST350I DISPLAY TYPE =RTPS
IST1695I PU NAME       CP NAME        COS NAME   SWITCH  CONGEST  SESSIONS
IST1696I CNR00004 NETA.SSCP2A         #INTER     NO      NO       1
IST1454I 1 RTP(S)DISPLAYED
IST314I END
```

DISPLAY SAMAP command

```
►►──DISPLAY NET,SAMAP──────────────────────────────────────────────────►◄
```

Abbreviations

Operand	Abbreviation
DISPLAY	D

Purpose

The DISPLAY SAMAP command displays the subarea mapping table from an ICN host.

Resulting display

The resulting VTAM display shows the subarea mapping table from an ICN host.

Examples

Displaying the subarea mapping table:

```
d net,samap
IST097I DISPLAY ACCEPTED
IST350I DISPLAY TYPE = SAMAP
IST1321I TABLE FOR SAMAP
IST1671I SA20     MAPSTO SA10
IST1671I SA10     MAPSTO SA20
IST314I END
```

DISPLAY SATOAPPN command

```
►►──DISPLAY NET,SATOAPPN──────────────────────────────────────────────►◄
```

Purpose

The DISPLAY SATOAPPN command displays the subarea-to-APPN Class of Service mapping table.

Resulting display

The resulting VTAM display shows the subarea-to-APPN Class of Service mapping table.

Examples

Displaying the subarea-to-APPN Class of Service mapping table:

```
d net,satoappn
IST097I DISPLAY ACCEPTED
IST350I DISPLAY TYPE = SATOAPPN
IST1321I TABLE FOR SATOAPPN
IST1514I SUBAREA COS    APPNCOS
IST1323I COSAPPL1       #CONNECT
IST1323I COSAPPL2       #BATCH
IST1323I COSAPPL3       #BATCHSC
IST1323I COSAPPL4       #INTER
IST1323I COSAPPL5       #CONNECT       DEFAULT
IST1323I ISTCOSDF       #INTERSC
IST314I END
```

DISPLAY SESSIONS command

Display all sessions:

```
►►──DISPLAY NET,SESSIONS──┬──────────────────────────────────────────────┬──►
                          ├─,LU1=lu_name──┬──────────────────┬──────────┤
                          │               └─,LU2=lu_name─────┘          │
                          ├─,LU2=lu_name──┬──────────────────┬──────────┤
                          │               └─,LU1=lu_name─────┘          │
                          ├─,PLU=plu_name─┬──────────────────┬──────────┤
                          │               └─,SLU=slu_name────┘          │
                          └─,SLU=slu_name─┬──────────────────┬──────────┘
                                          └─,PLU=plu_name────┘

►──┬─,LIST=COUNT──────────────────┬──┬─,SCOPE=ALL──────────┬──────────►◄
   │                              │  │                     │
   └─,LIST=──┬─┤ ALL operand: ├──┬─┘  └─,SCOPE=──┬─ACT───┬─┘
             ├─COUNT──────────────┤               ├─ALL───┤
             └─SUMMARY────────────┘               ├─PENDING─┤
                                                  └─Q───────┘
```

ALL operand:

```
├──ALL──┤ MAX operand: ├──────────────────────────────────────────────────┤
```

MAX operand:

```
├──┬─,MAX=DSPLYDEF_start_option_value─┬──────────────────────────────────┤
   │                                  │
   └─,MAX=──┬─*──────────────────────┬─┘
            └─number_of_resources────┘
```

Display a specific session:

```
►►──DISPLAY NET,SESSIONS──,SID=session_id──┬─,PATHINFO=YES──────┬──────────►◄
                                           │                    │
                                           └─,PATHINFO=──┬─NO─┬─┘
                                                         └─YES┘
```

Abbreviations

Operand	Abbreviation
DISPLAY	D
PATHINFO=YES	PATH
SCOPE=ACT	ACT or A
SCOPE=ALL	EVERY or E
SCOPE=PENDING	SCOPE=PEND or PEND
SESSIONS	SESSION

When using an abbreviation in place of an operand, code the abbreviation exactly as shown in the table. For example, when coding the abbreviation for SCOPE=ALL, code only EVERY or E. Do not code SCOPE=E.

Purpose

The DISPLAY SESSIONS command displays LU-LU session status information. The command can display status information for:

- A single session identified by its session identifier
- All sessions in which a specified logical unit is the primary session partner
- All sessions in which a specified logical unit is the secondary session partner
- All sessions in which a pair of logical units have a specified primary/secondary relationship as session partners
- All sessions in which a specified logical unit is a session partner (without regard to its primary or secondary status)
- All sessions between a pair of logical units regardless of their primary/secondary relationship as session partners
- All sessions known to VTAM, limited with the SCOPE operand to all pending sessions, all queued sessions, or all active sessions

Notes:

1. To display sessions between specified logical units, one of the session partners must reside in the host VTAM network.
2. If you issue the DISPLAY SESSIONS command at a network node server that is not an interchange node, control point, or SSCP for either session partner, this command might show duplicate information for some sessions. This might occur briefly during BIND processing in a normal session setup or it might indicate a hung session. If subsequent displays continue to show duplicate information for the same session, the session might be hung.

Operands

LIST

Specifies the level of detail to display.

LIST=ALL

Displays all session status information for sessions with the status specified in the SCOPE operand. If SCOPE=ALL, the display includes active, pending, and queued sessions.

LIST=COUNT

Displays only the total number of sessions with the status specified in the SCOPE operand. If SCOPE=ALL, the number includes all sessions, regardless of whether they are active, pending, or queued.

LIST=SUMMARY

Displays the total number of sessions with the status specified in the SCOPE operand (same as LIST=COUNT), plus the actual session state codes for pending and queued sessions. For a description of possible session initiation and termination states, see *z/OS Communications Server: SNA Messages*.

LU1=lu_name

Identifies the logical unit for which sessions are displayed. *lu_name* can be specified as a network-qualified name. If you also specify the LU2 operand, the command displays only sessions involving both named logical units.

If *lu_name* is a generic resource name, VTAM will display session status information for all members known by that generic name.

LU2=lu_name
Identifies the logical unit for which sessions are displayed. *lu_name* can be specified as a network-qualified name. If you also specify the LU1 operand, the command displays only sessions involving both named logical units.

If *lu_name* is a generic resource name, VTAM will display session status information for all members known by that generic name.

MAX
Specifies the maximum number of sessions that VTAM displays for this command. This operand is only valid with LIST=ALL.

MAX=*
Specifies that the value of the DSPLYMAX start option is used to limit the display output.

MAX=number_of_resources
Specifies the number of sessions that VTAM displays for this command. The valid range is 1–value of DSPLYMAX. The default is the value specified for the DSPLYDEF start option.

Specifying MAX limits the display output. VTAM searches only for the number of instances that you have specified. When that number is found, VTAM does not search any further. This saves processing time for the command and gives you control over the amount of display output generated by the command. If fewer sessions are found than you have specified on MAX, VTAM displays only the sessions that are found.

PATHINFO
Specifies whether or not path information is displayed.

PATHINFO=NO
Specifies that no path information is to be displayed.

PATHINFO=YES
Displays the following information for each hop in the session path known to this node

- The TG name
- The CP name
- The TG name
- HPR tye

This is in addition to the information currently being displayed.

Additional information such as RSCV and/or HPR path RSCV information is reported to z/OS by a DLUR node.

PLU=plu_name
Identifies the logical unit that is the primary session partner. *plu_name* can be specified as a network-qualified name. If you specify the PLU operand, the command displays only sessions in which this logical unit is the primary session partner. If you also specify the SLU operand, the command displays only sessions involving both named logical units in the specified primary/secondary relationship.

If *plu_name* is a generic resource name, VTAM will display session status information for all members known by that generic name.

SCOPE
Specifies the status of the sessions to display. See *z/OS Communications Server: SNA Messages* for a description of the initiation states “queued”, “pending active”, and “active” for each session status. You cannot use this operand with the SID operand.

SCOPE=ACT
Displays only active sessions.

SCOPE=ALL
Displays all sessions, whether active, pending, or queued.

SCOPE=PENDING
Displays only pending sessions. A pending state is:

- A transient state to or from a fully active state.
- A state of “recovery pending” or “recovery in progress” for sessions that have been retained due to the failure or takeover of an application enabled for persistence.

Note: In either situation, the state of the half-session as seen by the PLU is the status reported for the session. Because of this, you must enter the DISPLAY command on the system in which the application resides.

SCOPE=Q
Displays only queued sessions.

SID=session_id
Identifies the VTAM LU-LU session to display. To display the session identifier named in this operand, issue either the DISPLAY SESSIONS,SCOPE=ALL command or a DISPLAY ID=*resource name*,SCOPE=ALL command. The session ID is identified by SID on the display and is 16 characters long.

If you specify the SID operand, you cannot specify SCOPE or LIST on the same command.

SLU=slu_name
Identifies the logical unit that is the secondary session partner. *slu_name* can be specified as a network-qualified name. If you specify the SLU operand, the command displays only sessions in which this logical unit is the secondary session partner. If you also specify the PLU operand, the command displays only sessions involving both named logical units in the specified primary/secondary relationship.

If *slu_name* is a generic resource name, VTAM will display session status information for all members known by that generic name.

Resulting display

The resulting display shows:

- For LIST=COUNT:
  - The number of sessions with the status specified in the SCOPE operand, optionally limited by LU1, LU2, PLU, or SLU.
  - A summary of active SSCP sessions, showing the number of SSCP-LU sessions, the number of SSCP-PU sessions, and the number of SSCP-SSCP sessions. This includes both active and pending sessions. These counts of SSCP sessions are not included in the number of total sessions (message

IST878I). This summary of active SSCP sessions does not appear if the display has been limited by the LU1, LU2, PLU, or SLU operands, or if SCOPE excludes active sessions.

- For LIST=SUMMARY:
  - The number of sessions with the status specified in the SCOPE operand, optionally limited by LU1, LU2, PLU, or SLU.
  - For queued and pending sessions, the number of sessions with each status code.
  - For active sessions, the number of LU-LU sessions, the number of CP-CP contention winner sessions, and the number of CP-CP contention loser sessions.
  - A summary of active SSCP sessions, showing the number of SSCP-LU sessions, the number of SSCP-PU sessions, and the number of SSCP-SSCP sessions. This includes both active and pending sessions. These counts of SSCP sessions are not included in the number of total sessions (message IST878I). This summary of active SSCP sessions does not appear if the display has been limited by the LU1, LU2, PLU, or SLU operands, or if SCOPE excludes active sessions.
- For LIST=ALL:
  - The names of the resources in the sessions.
  - Each session's identifier.
  - Each session's status code.
  - The number of sessions with the status specified in the SCOPE operand, optionally limited by LU1, LU2, PLU, or SLU.
  - For queued and pending sessions, the number of sessions with each status code.

    Note: If the value of the MAX operand is exceeded, *count* displays ten asterisks (**********).
  - For active sessions, the number of LU-LU sessions, the number of CP-CP or CPSVRMGR contention winner sessions, and the number of CP-CP or CPSVRMGR contention loser sessions.

    Note: If the value of the MAX operand is exceeded, *count* for the LU-LU sessions displays ten asterisks (**********).
  - A summary of active SSCP sessions, showing the number of SSCP-LU sessions, the number of SSCP-PU sessions, and the number of SSCP-SSCP sessions. This includes both active and pending sessions. These counts of SSCP sessions are not included in the number of total sessions (message IST878I). This summary of active SSCP sessions does not appear if the display has been limited by the LU1, LU2, PLU, or SLU operands, or if SCOPE excludes active sessions.
- For SID:
  - The real and alias (if available) names of the primary session partner.
  - The real and alias (if available) names of the secondary session partner.
  - The session status.
  - The adjacent SSCP toward the PLU or SLU, if cross-domain (if available).
  - The rapid transport protocol (RTP) physical unit as the ALSNAME toward the PLU or SLU, if the session is using high performance routing (HPR).
  - The gateway NCP toward the PLU or SLU, if cross-network (if available).

– The signals needed to complete a session, if the session is pending session setup or takedown.
– The Class of Service table entry and logon mode entry used.
– The APPN Class of Service toward the PLU or SLU, (if available).
– Compression information, if compression is being used on the session in either the PLU-to-SLU or the SLU-to-PLU direction.
  - The compression-level values (0–4) in use for input and output messages
  - The percentage of reduction in length for input and output messages
  - The indicator “NA” (not applicable) if there has been no message traffic or if compression is not being used on either the inbound or outbound half-session.

  If compression is not being used in either direction, this information is not displayed.
– Path information for each hop in the session known to this node.

Examples

Displaying a specific session:

```
d net,sessions,sid=eaabeec3e5a79ccb
IST097I DISPLAY ACCEPTED
IST350I DISPLAY TYPE = SESSIONS
IST879I PLU/OLU REAL = NETA.APPL2        ALIAS = ***NA***
IST879I SLU/DLU REAL = NETA.APPL1        ALIAS = ***NA***
IST880I SETUP STATUS = ACTIV
IST933I LOGMODE=INTERACT, COS=*BLANK*
IST1635I PLU HSCB TYPE: FMCB LOCATED AT ADDRESS X'0155F5B8'
IST1635I SLU HSCB TYPE: FMCB LOCATED AT ADDRESS X'0155F720'
IST1636I PACING STAGE(S) AND VALUES:
IST1637I PLU--STAGE 1--SLU
IST1638I STAGE1: PRIMARY TO SECONDARY DIRECTION - ADAPTIVE
IST1639I         PRIMARY SEND: CURRENT   =     7     NEXT =     8
IST1640I         SECONDARY RECEIVE       = 32767
IST1641I STAGE1: SECONDARY TO PRIMARY DIRECTION - ADAPTIVE
IST1642I         SECONDARY SEND: CURRENT =     7     NEXT =     8
IST1643I         PRIMARY RECEIVE         = 32767
IST314I END
```

Displaying all sessions:

```
d net,sessions,scope=all,list=all
IST097I DISPLAY ACCEPTED
IST350I DISPLAY TYPE = SESSIONS
IST873I        PLU               SLU              SID        STATUS
IST874I NETA.SSCP1A       NETA.ENCPA4       EAABEEC3297ED9FC ACTIV/DL
IST874I NETB.SSCP7B       NETA.SSCP1A       C2BB19BC57AD196C ACTIV/CP
IST874I NETA.SSCP1A       NETB.SSCP7B       EAABEEC3297ED9FA ACTIV/CP
IST874I NETA.SSCP2A       NETA.SSCP1A       F6ABEEC32C7EDA76 ACTIV/CP
IST874I NETA.SSCP1A       NETA.SSCP2A       EAABEEC3297ED9F8 ACTIV/CP
IST874I NETA.ENCPA4       NETA.SSCP1A       E2C5E2E2D6D50013 ACTIV/DL
IST924I -------------------------------------------------------------
IST878I NUMBER OF PENDING SESSIONS =          0
IST924I -------------------------------------------------------------
IST878I NUMBER OF ACTIVE  SESSIONS =          6
IST1162I    LU-LU                  =          2
IST1162I    CP-CP CONWINNER        =          2
IST1162I    CP-CP CONLOSER         =          2
IST924I -------------------------------------------------------------
IST878I NUMBER OF QUEUED  SESSIONS =          0
IST924I -------------------------------------------------------------
IST878I NUMBER OF TOTAL   SESSIONS =          6
IST924I -------------------------------------------------------------
```

```
IST1161I SSCP SESSIONS
IST1162I    SSCP-LU                =          6
IST1162I    SSCP-PU                =          4
IST1162I    SSCP-SSCP              =          0
IST314I END
```

Displaying sessions, limiting output to six sessions:

```
d net,sessions,list=all,max=6
IST097I DISPLAY ACCEPTED
IST350I DISPLAY TYPE = SESSIONS 141
IST873I        PLU               SLU              SID        STATUS
IST874I NETA.MECHZ1A      NETA.ECHOZHA      D9F389C8E5517F35 ACTIV/MI
IST874I NETA.MECHZ1A      NETA.ECHOZHA      D9F389C8E5517F38 ACTIV/MI
IST874I NETA.ECHOZIA      NETA.ECHOZHA      E7F38956127BB9F6 ACTIV
IST874I NETA.ECHOZIA      NETA.ECHOZHA      E7F38956127BB9F4 ACTIV
IST874I NETA.MECHZIA      NETA.ECHOZHA      E7F38956127BB9F3 ACTIV/M
IST874I NETA.MECHZIA      NETA.ECHOZHA      E7F38956127BB9F1 ACTIV/M
IST1315I DISPLAY TRUNCATED AT MAX = 6
IST924I -------------------------------------------------------------
IST878I NUMBER OF PENDING SESSIONS = **********
IST924I -------------------------------------------------------------
IST878I NUMBER OF ACTIVE  SESSIONS = **********
IST1162I    LU-LU                  = **********
IST1162I    CP-CP CONWINNER        =          1
IST1162I    CP-CP CONLOSER         =          1
IST924I -------------------------------------------------------------
IST878I NUMBER OF QUEUED  SESSIONS = **********
IST924I -------------------------------------------------------------
IST878I NUMBER OF TOTAL   SESSIONS = **********
IST924I -------------------------------------------------------------
IST1161I SSCP SESSIONS
IST1162I    SSCP-LU                =         25
IST1162I    SSCP-PU                =          1
IST1162I    SSCP-SSCP              =          0
IST314I END
```

Displaying a summary of all sessions:

```
d net,sessions,scope=all,list=summary
IST097I DISPLAY ACCEPTED
IST350I DISPLAY TYPE = SESSIONS
IST924I -------------------------------------------------------------
IST878I NUMBER OF PENDING SESSIONS =          0
IST924I -------------------------------------------------------------
IST878I NUMBER OF ACTIVE  SESSIONS =          4
IST1162I    LU-LU                  =          2
IST1162I    CP-CP CONWINNER        =          1
IST1162I    CP-CP CONLOSER         =          1
IST924I -------------------------------------------------------------
IST878I NUMBER OF QUEUED  SESSIONS =          0
IST924I -------------------------------------------------------------
IST878I NUMBER OF TOTAL   SESSIONS =          4
IST924I -------------------------------------------------------------
IST1161I SSCP SESSIONS
IST1162I    SSCP-LU                =         10
IST1162I    SSCP-PU                =          4
IST1162I    SSCP-SSCP              =          0
IST314I END
```

Displaying all sessions for a specific LU:

```
d net,sessions,lu1=appl0001,scope=all,list=summary
IST097I DISPLAY ACCEPTED
IST350I DISPLAY TYPE = SESSIONS
IST924I -------------------------------------------------------------
IST878I NUMBER OF PENDING SESSIONS =          0
IST924I -------------------------------------------------------------
```

```
IST878I NUMBER OF ACTIVE  SESSIONS =          1
IST924I -------------------------------------------------------------
IST878I NUMBER OF QUEUED  SESSIONS =          0
IST924I -------------------------------------------------------------
IST878I NUMBER OF TOTAL   SESSIONS =          1
IST314I END
```

Displaying active sessions for a specific LU:

```
d net,sessions,lu1=appl1,scope=act,list=count
IST097I DISPLAY ACCEPTED
IST350I DISPLAY TYPE = SESSIONS
IST878I NUMBER OF ACTIVE  SESSIONS =          1
IST314I END
```

Displaying pending sessions for a specific LU:

```
d net,sessions,lu1=appl1,scope=pending,list=all
IST097I DISPLAY ACCEPTED
IST350I DISPLAY TYPE = SESSIONS
IST873I        PLU               SLU              SID        STATUS
IST874I NETA.APPL1        NETA.NETAPPL1     EAABEEC3FD825DEA PSEST/B
IST878I NUMBER OF PENDING SESSIONS =          1
IST1237I    PSEST    = 1
IST314I END
```

Displaying queued sessions between two LUs:

```
d net,sessions,lu1=appl1,lu2=appl0001,scope=q,list=count
IST097I DISPLAY ACCEPTED
IST350I DISPLAY TYPE = SESSIONS
IST1284I LUALIAS APPL0001 IS NETA.NETAPPL1 FOR APPLICATIONS
IST878I NUMBER OF QUEUED  SESSIONS =          2
IST314I END
```

Displaying a count of active sessions with a USERVAR:

```
d net,sessions,lu1=echo01a,scope=act,list=count
IST097I DISPLAY ACCEPTED
IST350I DISPLAY TYPE = SESSIONS
IST113I ECHO01A IS A USERVAR WITH VALUE ECHO01A IN NETWORK NETA
IST1057I NETA.ECHO01A IS ALSO A REAL RESOURCE
IST878I NUMBER OF ACTIVE  SESSIONS =         61
IST314I END
```

Displaying a generic resource name for LU1:

```
d net,sessions,lu1=cics,list=all
IST097I DISPLAY ACCEPTED
IST350I DISPLAY TYPE = SESSIONS
IST1364I CICS IS A GENERIC RESOURCE NAME FOR:
IST1154I NETA.CICS1        NETA.CICS2        NETA.CICS3
IST924I -------------------------------------------------------------
IST873I        PLU               SLU              SID        STATUS
IST874I NETA.CICS1        NETA.APPL1A2      EAABEEC3F8FE476C ACTIV
IST874I NETA.APPL1A1      NETA.CICS2        EAABEEC3F8FE476B ACTIV
IST874I NETA.APPL1A1      NETA.CICS2        EAABEEC3F8FE476A ACTIV
IST874I NETA.CICS3        NETA.APPL1A5      EAABEEC3F8FE4769 ACTIV
IST874I NETA.CICS3        NETA.APPL1A9      EAABEEC3F8FE4768 ACTIV
IST878I NUMBER OF PENDING SESSIONS =          0
IST878I NUMBER OF ACTIVE  SESSIONS =          5
IST878I NUMBER OF QUEUED  SESSIONS =          0
IST878I NUMBER OF TOTAL   SESSIONS =          5
IST314I END
```

Displaying PATHINFO with HPR (including all the types of session/paths):

```
d net,sessions,sid=f6abeec39de53b70,pathinfo=yes
IST097I DISPLAY ACCEPTED
IST350I DISPLAY TYPE = SESSIONS
IST879I PLU/OLU REAL = NETA.NETAPPL1     ALIAS = ***NA***
IST879I SLU/DLU REAL = NETA.AA2LUA1      ALIAS = ***NA***
IST880I SETUP STATUS = ACTIV
IST875I ADJSSCP TOWARDS PLU = ISTAPNCP
IST875I ALSNAME TOWARDS PLU = CNR00004
IST875I ALSNAME TOWARDS SLU = P3A4956N
IST933I LOGMODE=INTERACT, COS=*BLANK*
IST875I APPNCOS TOWARDS PLU = #INTER
IST875I APPNCOS TOWARDS SLU = #INTER
IST1635I PLU HSCB TYPE: BSB LOCATED AT ADDRESS X'02FF6228'
IST1636I PACING STAGE(S) AND VALUES:
IST1644I PLU--STAGE 1-----|-----STAGE 2--SLU
IST1638I STAGE1: PRIMARY TO SECONDARY DIRECTION - ADAPTIVE
IST1640I         SECONDARY RECEIVE       =     1
IST1641I STAGE1: SECONDARY TO PRIMARY DIRECTION - ADAPTIVE
IST1642I         SECONDARY SEND: CURRENT =     1     NEXT =     1
IST1638I STAGE2: PRIMARY TO SECONDARY DIRECTION - ADAPTIVE
IST1639I         PRIMARY SEND: CURRENT   =     0     NEXT =     1
IST1641I STAGE2: SECONDARY TO PRIMARY DIRECTION - ADAPTIVE
IST1643I         PRIMARY RECEIVE         =    15
IST1710I RSCV FROM PLU SAVED AT SESSION ACTIVATION
IST1460I TGN  CPNAME             TG TYPE      HPR
IST1461I  21  NETA.SSCP1A        APPN         RTP
IST1461I  21  NETA.NNCPA2        APPN         *NA*
IST1713I RTP RSCV IN THE DIRECTION OF THE PLU
IST1460I TGN  CPNAME             TG TYPE      HPR
IST1461I  21  NETA.SSCP2A        APPN         RTP
IST1758I RSCV TOWARDS DLUR SAVED AT SESSION ACTIVATION
IST1460I TGN  CPNAME             TG TYPE      HPR
IST1461I  21  NETA.SSCP1A        APPN         RTP
IST1461I  21  NETA.NNCPA2        APPN         *NA*
IST1759I RTP RSCV FROM THE DIRECTION OF THE DLUR
IST1460I TGN  CPNAME             TG TYPE      HPR
IST1461I  22  NETA.SSCP1A        APPN         RTP
IST1461I  21  NETA.NNCPA2        APPN         *NA*
IST314I END
```

Displaying PATHINFO without HPR:

```
d net,sessions,sid=F6ABEEC350FC32A6,path
IST097I DISPLAY ACCEPTED
IST350I DISPLAY TYPE = SESSIONS
IST879I PLU/OLU REAL = NETA.NETAPPL1     ALIAS = ***NA***
IST879I SLU/DLU REAL = NETA.APPLAA1      ALIAS = ***NA***
IST880I SETUP STATUS = ACTIV
IST875I ADJSSCP TOWARDS SLU = ISTAPNCP
IST875I ALSNAME TOWARDS SLU = AHHCPU1
IST933I LOGMODE=INTERACT, COS=*BLANK*
IST875I APPNCOS TOWARDS SLU = #INTER
IST1711I RSCV TOWARDS SLU SAVED AT SESSION ACTIVATION
IST1460I TGN  CPNAME             TG TYPE      HPR
IST1461I  21  NETA.SSCP1A        APPN         *NA*
IST1461I  21  NETA.SSCPAA        APPN         *NA*
IST314I END
```

DISPLAY SNSFILTR command

```
►►──DISPLAY NET,SNSFILTR──────────────────────────────────────────────────►◄
```

Purpose

The DISPLAY SNSFILTR command displays the current active SAW sense filter.

Resulting display

The resulting VTAM display shows the current active SAW sense filter.

Examples

Displaying the SAW sense filter:

```
d net,snsfiltr
IST350I DISPLAY TYPE = SNSFILTR
IST1321I TABLE FOR SAW SENSE FILTER
IST1551I  0857****  087D0001  087D0002  087D0003  087D0004
IST1551I  087D0005  087D0006  087D0007  087D0008  087D0009
IST1551I  089D0001  8013****
IST314I END
```

DISPLAY SRCHINFO command

Format

Display summary information about outstanding subarea and APPN searches:

```
                                                   (3)
                                          ┌─,TYPE=SUBAREA──────┐
                                                   (2)
                                          ├─,TYPE=APPN───────┤
                                                   (1)
                          ┌─,LIST=SUMMARY─┐ ├─,TYPE=ALL────────┤
►►─DISPLAY NET,SRCHINFO──┤               │ │                  │──────────────►
                                          └─,TYPE=──┬─ALL────┬─┘
                                                    ├─APPN───┤
                                                    └─SUBAREA┘

                        (4)
►──┬─,FROMCP=cp_name──┬──┬─,FROMSSCP=sscp_name──┬──────────────────────────►
   └─,TOCP=cp_name────┘  └─,TOSSCP=sscp_name────┘

   ┌─,MAX=DSPLYDEF_start_option_value─┐
►──┤                                  ├──────────────────────────────────►◄
   └─,MAX=──┬─*──────────────────────┬─┘
            └─number_of_searches─────┘
```

Notes:

1 TYPE=ALL is the default when the HOSTSA and NODETYPE start options are specified.

2 TYPE=APPN is the default when the NODETYPE start option is specified without the HOSTSA start option.

3 TYPE=SUBAREA is the default when the HOSTSA start option is specified without the NODETYPE start option.

4 These operands are valid with TYPE=APPN or TYPE=ALL.

Display detailed information about outstanding subarea and APPN searches:

DISPLAY SRCHINFO

```
►►──DISPLAY NET,SRCHINFO──┬──────────────────────────────────┬──,LIST=ALL──────►
                          ├─,DLU=lu_name──┬──────────────┤
                          │               └─,OLU=lu_name─┘
                          ├─,OLU=lu_name──┬──────────────┤
                          │               └─,DLU=lu_name─┘
                          ├─,LU1=lu_name──┬──────────────┤
                          │               └─,LU2=lu_name─┘
                          └─,LU2=lu_name──┬──────────────┘
                                          └─,LU1=lu_name─┘
```

```
                   (3)
  ┌─,TYPE=SUBAREA──────┐
                (2)
  ├─,TYPE=APPN─────────┤
                (1)
  ├─,TYPE=ALL──────────┤                                  (4)
►─┤                    ├──┬─,FROMCP=cp_name─┬──┬─,FROMSSCP=sscp_name─┬──►
  └─,TYPE=──┬─ALL────┬─┘  └─,TOCP=cp_name──┘  └─,TOSSCP=sscp_name──┘
            ├─APPN───┤
            └─SUBAREA┘

  ┌─,MAX=DSPLYDEF_start_option_value─┐
►─┤                                  ├──────────────────────────────────────►◄
  └─,MAX=──┬─*──────────────────────┬─┘
           └─number_of_searches─────┘
```

Notes:

1 TYPE=ALL is the default when the HOSTSA and NODETYPE start options are specified.

2 TYPE=APPN is the default when the NODETYPE start option is specified without the HOSTSA start option.

3 TYPE=SUBAREA is the default when the HOSTSA start option is specified without the NODETYPE start option.

4 These operands are valid with TYPE=APPN or TYPE=ALL.

Display search information about a specific search request:

```
                                                   (3)
                                          ┌─,TYPE=SUBAREA──────┐
                                                     (2)
                                          ├─,TYPE=APPN─────────┤
                                                     (1)
►►──DISPLAY NET,SRCHINFO──,SID=session_identifier──┤─,TYPE=ALL──────────┤──►
                                          └─,TYPE=──┬─ALL────┬─┘
                                                    ├─APPN───┤
                                                    └─SUBAREA┘
```

```
►──┬─,MAX=DSPLYDEF_start_option_value─┬──────────────────────────────────────►◄
   │                                  │
   └─,MAX=──┬─*──────────────────────┬─┘
            └─number_of_searches─────┘
```

Notes:

1 TYPE=ALL is the default when the HOSTSA and NODETYPE start options are specified.

2 TYPE=APPN is the default when the NODETYPE start option is specified without the HOSTSA start option.

3 TYPE=SUBAREA is the default when the HOSTSA start option is specified without the NODETYPE start option.

Operand	Abbreviation
DISPLAY	D
SID	PCID

Purpose

The DISPLAY SRCHINFO command displays information about outstanding APPN and subarea search requests.

Note: The DISPLAY SRCHINFO,LIST=ALL and the DISPLAY SESSIONS,LIST=ALL commands will not always show the same session identifiers (SIDs). There are sessions (for example, INQUIRE APPSTAT) that do not involve sessions. Once session setup has progressed beyond the search for the DLU, the SID of the session will not appear in the DISPLAY SRCHINFO output.

Parameters

DLU=lu_name

Specifies the name of a destination LU. Display results for both subarea and APPN are limited by specifing this operand.

lu_name can be specified as a network-qualified name. If you do not specify the network identifier, VTAM uses the identifier of the host from which you are issuing the command.

You can specify wildcard values for this operand. For more information about using wildcards, see “Using wildcard names” on page 11.

FROMCP=cp_name

Specifies the name of a control point (CP).

cp_name can be specified as a network-qualified name. If you do not specify the network identifier, VTAM uses the identifier of the host from which you are issuing the command.

You can specify wildcard values for this operand. For more information about using wildcards, see “Using wildcard names” on page 11.

FROMSSCP=sscp_name
Specifies the name of a subsystem control point (SSCP).

The value specified for *sscp_name* cannot be a network-qualified name.

You can specify wildcard values for this operand. For more information about using wildcards, see “Using wildcard names” on page 11.

LIST
Specifies the level of detail to display.

LIST=SUMMARY
For TYPE=SUBAREA or TYPE=ALL, displays summary information concerning outstanding CDINIT, DSRLST, and INIT_OTHER CD (IOCD) search requests. For TYPE=APPN or TYPE=ALL, displays summary information concerning the number of outstanding search requests with all adjacent control points (CPs).

LU1=lu_name
Specifies the name of a logical unit. If this operand is specified, the information displayed is limited to outstanding search requests sent to or received from the specified LU.

lu_name can be specified as a network-qualified name. If you do not specify the network identifier, VTAM uses the identifier of the host from which you are issuing the command.

You can specify wildcard values for this operand. For more information about using wildcards, see “Using wildcard names” on page 11.

LU1 and LU2 can be used in place of DLU and OLU when it is not known which partner is the destination or originating LU.

LU2=lu_name
Specifies the name of a logical unit.

lu_name can be specified as a network-qualified name. If you do not specify the network identifier, VTAM uses the identifier of the host from which you are issuing the command.

You can specify wildcard values for this operand. For more information about using wildcards, see “Using wildcard names” on page 11.

LU1 and LU2 can be used in place of DLU and OLU when it is not known which partner is the destination or originating LU.

MAX
Specifies the maximum number of searches that VTAM displays for this command.

MAX=*
Specifies that the value of the DSPLYMAX start option is used to limit the display output.

MAX=number_of_searches
Specifies the maximum number of searches that VTAM displays for this command. The valid range is 1–value of DSPLYMAX. The default is the value specified for the DSPLYDEF start option.

Specifying MAX limits the display output; VTAM searches only for the number of instances that you have specified. When that number is found, VTAM does not search any further. This saves processing time for the command and gives you control over the amount of display output generated by the command.

For TYPE=ALL, the MAX operand is applied separately to the subarea and APPN displays.

OLU=lu_name
Identifies the LU that is the origin of a search request.

lu_name can be specified as a network-qualified name. If you do not specify the network identifier, VTAM uses the identifier of the host from which you are issuing the command.

You can specify wildcard values for this operand. For more information about using wildcards, see “Using wildcard names” on page 11.

SID=session_identifier
Identifies the session ID (SID) of a specific search to be displayed. The SID is also known as the procedure-correlation identifier (PCID). Both subarea and APPN information will be provided, based on the TYPE operand.

If you specify the SID operand, do not specify LIST.

The SID may be obtained from the output of DISPLAY SRCHINFO,LIST=ALL (search-related requests) or DISPLAY SESSIONS,LIST=ALL (session-related requests).

TOCP=cp_name
Identifies an adjacent CP for a search request.

cp_name can be specified as a network-qualified name. If you do not specify the network identifier, VTAM uses the identifier of the host from which you are issuing the command.

You can specify wildcard values for this operand. For more information about using wildcards, see “Using wildcard names” on page 11.

TOSSCP=sscp_name
Identifies the destination SSCP for a search request.

You can specify wildcard values for this operand. For more information about using wildcards, see “Using wildcard names” on page 11.

TYPE
Identifies the type of information desired.

TYPE=ALL
Indicates that both APPN and subarea search information will be displayed. TYPE=ALL is the default for interchange nodes and migration data hosts.

TYPE=APPN
Indicates that APPN search information will be displayed. Subarea search information will not be displayed.

TYPE=SUBAREA
Indicates that subarea search information will be displayed. APPN search information will not be displayed.

Results

Specifying the DLU operand limits the display to outstanding search requests sent to the specified LU.

Specifying the OLU operand limits the display to outstanding search requests sent from the specified LU.

Specifying the FROMCP operand limits the display to outstanding search requests sent from the specified CP.

Specifying the FROMSSCP limits the display to the outstanding search requests sent from the specified SSCP.

Specifying the LU1 or LU2 operand limits the display to the outstanding search requests sent to or received from the specified LU.

Specifying the TOCP operand limits the display to the outstanding search requests sent to the specified CP.

Specifying the TOSSCP operand limits the subarea information displayed to those search requests targeted for a particular SSCP.

Examples

Displaying summary of outstanding search requests.

```
d net,srchinfo,list=summary
IST097I DISPLAY ACCEPTED
IST350I DISPLAY TYPE = SRCHINFO
IST1520I SUBAREA SEARCH INFORMATION:
IST1521I   TOSSCP   NAME   CDINIT    DSRLST    IOCD   INITOT     TOTAL
IST1522I   SSCP1A               0         1       0        2         3
IST1525I   TOTAL NUMBER OF OUTSTANDING SEARCHES =          3
IST1454I 1 SSCP NAME(S) DISPLAYED
IST924I -------------------------------------------------------------
IST1526I APPN SEARCH INFORMATION:
IST1527I   TOCP   NAME       TYPE  STATUS   BROADCAST DIRECTED   TOTAL
IST1528I   NETA.SSCPAA        NN    OPEN            2        1       3
IST1525I   TOTAL NUMBER OF OUTSTANDING SEARCHES =          3
IST1454I 1 CP NAME(S) DISPLAYED
IST314I END
```

Displaying detail information about outstanding requests.

```
d net,srchinfo,list=all
IST097I DISPLAY ACCEPTED
IST350I DISPLAY TYPE = SRCHINFO
IST1520I SUBAREA SEARCH INFORMATION:
IST1523I       OLU                DLU                SID       RU
IST1524I   NETA.APPL1        NETA.SSCP1A       ****NA****      DSRLST
IST1524I   NETA.APPL2        NETA.SSCP1A       ****NA****      INITOT
IST1524I   NETA.SSCP1A       NETA.SSCP1A       ****NA****      INITOT
IST1454I 3 PAIR(S) DISPLAYED
IST924I -------------------------------------------------------------
IST1526I APPN SEARCH INFORMATION:
IST1529I       OLU                DLU                SID       LOCATE
IST1530I   NETA.SSCP1A       NETA.SSCP2A       EAABEEC3C6093893     1
IST1530I   NETB.SSCP7B       NETA.NETAPPL2     C2BB19BCF437741D     1
IST1530I   NETB.SSCP7B       NETA.NETAPPL1     C2BB19BCF437741C     1
IST1525I   TOTAL NUMBER OF OUTSTANDING SEARCHES =          3
IST1454I 3 PAIR(S) DISPLAYED
IST314I END
```

Displaying outstanding information about a specific request.

```
d net,srchinfo,sid=eaabeec3c6093891
IST097I DISPLAY ACCEPTED
IST350I DISPLAY TYPE = SRCHINFO
IST1520I SUBAREA SEARCH INFORMATION:
IST1531I   SID = EAABEEC3C6093891         CP(OLU) = SSCP1A
IST1532I   OLU = NETA.APPL1               DLU = NETA.NETAPPL1
IST1540I   SEARCH STATUS = PDSRLST        SSCP(OLU) = SSCP1A
```

```
IST1539I   PCID MODIFIER = 00000000000000000000
IST1534I   SSCP/CP IN OLU DIRECTION = NETA.SSCP1A
IST1533I   SEARCH CONCENTRATED = NO       RDS = NO
IST894I ADJSSCPS TRIED  FAILURE SENSE   ADJSSCPS TRIED  FAILURE SENSE
IST895I    SSCP2A          08420000
IST1454I 1 ADJSSCP(S) DISPLAYED
IST1537I   AWAITING REPLY FROM THE FOLLOWING NODE(S):
IST1538I      NETA.ISTAPNCP
IST924I -------------------------------------------------------------
IST1526I APPN SEARCH INFORMATION:
IST1531I   SID = EAABEEC3C6093891         CP(OLU) = NETA.SSCP1A
IST1532I   OLU = NETA.APPL1               DLU = NETA.NETAPPL1
IST1539I   PCID MODIFIER = 10000000000000000000
IST1545I   NODE ROLE VECTOR = X'A000'
IST1541I   LOCATES PENDING =          0   CURRENT TASK = X'0B'
IST1533I   SEARCH CONCENTRATED = YES      RDS = NO
IST1534I   SSCP/CP IN OLU DIRECTION = NETA.SSCP1A
IST1535I   REPLY RETURNED TO ORIGINATING CP = NO
IST1536I   CONCENTRATED BEHIND C2BB19BCF437741C 22100000000000000000
IST924I -------------------------------------------------------------
IST1531I   SID = C2BB19BCF437741C         CP(OLU) = NETB.SSCP7B
IST1532I   OLU = NETB.SSCP7B              DLU = NETA.NETAPPL1
IST1539I   PCID MODIFIER = 22100000000000000000
IST1545I   NODE ROLE VECTOR = X'2000'
IST1541I   LOCATES PENDING =          1   CURRENT TASK = X'17'
IST1533I   SEARCH CONCENTRATED = NO       RDS = YES
IST1548I   BROADCAST = YES                DIRECTED = NO
IST1534I   SSCP/CP IN OLU DIRECTION = NETB.SSCP7B
IST1535I   REPLY RETURNED TO ORIGINATING CP = NO
IST1537I   AWAITING REPLY FROM THE FOLLOWING NODE(S):
IST1538I      NETA.SSCPAA
IST1543I   REQUESTS CONCENTRATED BEHIND THIS SEARCH =     1
IST314I END
```

DISPLAY STATIONS command

```
►►─DISPLAY NET,STATIONS──┬──────────────────────────────────────────────►
                         │                          (1)
                         └─,ID=─┬─name──────────────┬─┘
                                │      ┌──,──┐       │
                                └─(────▼─name─────)─┘

►─┬─,MAX=DSPLYDEF_start_option_value─┬─┬─,SCOPE=ALL──────────────┬──►◄
  │                                  │ │                         │
  └─,MAX=─┬─*──────────────────────┬─┘ └─,SCOPE=─┬─ALL──────────┬─┘
          └─number_of_resources────┘             │              │
                                                 ├─ACT──────────┤
                                                 ├─ACTONLY──────┤
                                                 ├─ACTSESS──────┤
                                                 ├─ALL──────────┤
                                                 ├─CONCT────────┤
                                                 ├─INACT────────┤
                                                 ├─INACTONLY────┤
                                                 ├─PENDING──────┤
                                                 ├─RELSD────────┤
                                                 └─RESET────────┘
```

Notes:

1 Depending on the value of the DSPLYWLD start option, wildcard values can be used for this operand.

Abbreviations

Operand	Abbreviation
DISPLAY	D
SCOPE=ACT	ACT or A
SCOPE=ACTONLY	ACTONLY
SCOPE=ACTSESS	ACTSESS
SCOPE=ALL	EVERY or E
SCOPE=CONCT	CONCT
SCOPE=INACT	INACT or I
SCOPE=INACTONLY	INACTONL
SCOPE=PENDING	PEND
SCOPE=RELSD	RELSD
SCOPE=RESET	RESET

When using an abbreviation in place of an operand, code the abbreviation exactly as shown in the table. For example, when coding the abbreviation for SCOPE=ALL, code only EVERY or E. Do not code SCOPE=E.

Purpose

The DISPLAY STATIONS command displays the status of all cross-subarea link stations for active major nodes.

Operands

ID=name
Specifies the name of one or more major nodes, groups, lines, or link stations. If this operand is specified, information is displayed about only the link stations associated with the specified nodes. If this operand is omitted, information is displayed about all link stations in every active major node.

Depending on the value of the DSPLYWLD start option, wildcard values can be used for this operand. For more information about using wildcards, see “Using wildcard names” on page 11.

Attention: Specifying a wildcard name might degrade performance because VTAM checks every major node, group, line, and link station in the network.

MAX
Specifies the maximum number of cross-subarea link stations that VTAM displays for this command.

MAX=*
Specifies that the value of the DSPLYMAX start option is used to limit the display output.

MAX=number_of_resources
Specifies the number of cross-subarea link stations that VTAM displays for this command. The valid range is 1–value of DSPLYMAX. The default is the value specified for the DSPLYDEF start option.

Specifying MAX limits the display output. VTAM searches only for the number of instances that you have specified. When that number is found, VTAM does not search any further. This saves processing time for the command and gives you control over the amount of display output generated by the command. If fewer cross-subarea link stations are found than you have specified on MAX, VTAM displays only the stations that are found.

SCOPE
Specifies the desired scope of the display.

Note: If you specify the SCOPE operand without specifying a value SCOPE=ALL is assumed.

SCOPE=ACT
Specifies that information is to be displayed about all active, pending, and connectable cross-subarea link stations within each major node or associated with a specific node. If this display is undesirably large, you can use SCOPE=ACTONLY or SCOPE=CONCT to further limit the display.

SCOPE=ACTONLY
Specifies that information is to be displayed about all cross-subarea link stations in an active state within each major node or associated with a specific node. The display does **not** include link stations in pending or connectable states. If no link stations are found in an active state, you can use SCOPE=ACT to broaden the scope of the display to include those in active, connectable, and pending states.

SCOPE=ACTSESS
Specifies that information is to be displayed about all cross-subarea link stations that are active with sessions within each major node or associated with a specific node.

SCOPE=ALL
Specifies that information is to be displayed about all cross-subarea link stations within each major node or associated with a specific node (regardless of their status).

SCOPE=CONCT
Specifies that information is to be displayed about all cross-subarea link stations in a CONCT (connectable) state within each major node or associated with a specific node. If no link stations are found in a connectable state, you can use SCOPE=ACT to broaden the scope of the display to include those in active, connectable, and pending states.

SCOPE=INACT
Specifies that information is to be displayed about all inactive cross-subarea link stations within each major node or associated with a specific node. If this display is undesirably large, you can use SCOPE=INACTONLY or SCOPE=RESET to further limit the display.

SCOPE=INACTONLY
Specifies that information is to be displayed about all inactive cross-subarea link stations within each major node or associated with a specific node. Resources in a RESET state are not included in the SCOPE=INACTONLY display.

SCOPE=PENDING
Specifies that information is to be displayed about all pending cross-subarea link stations within each major node or associated with a specific node. A pending state is a transient state to or from the fully active state.

SCOPE=RELSD
Specifies that the information is to be displayed about all PUs in a RELSD state within the specified major nodes (or within all NCP, local SNA, and switched major nodes if the ID operand is omitted).

SCOPE=RESET
Specifies that information is to be displayed about cross-subarea link stations in a RESET state within each major node or associated with a specific node.

Resulting display

The resulting display shows:

- For each major node containing physical units that have subordinate link stations (host PU, NCP major node, or channel-attachment major node), or a node with subordinate or associated link stations:
  - The name of the major node
  - The subarea address of the major node (if it has one)
- For each link station:
  - The name and status of the link
  - The name and status of the link station
  - The current transmission group number

– The defined transmission group number (If no specific transmission group number was defined, it is displayed as 0.)
– The name (if known) and subarea (if known) of any adjacent NCP or host with which the link station is currently associated, and the name of the network in which the adjacent NCP or host reside

Examples

Displaying a specific cross-subarea link station:

```
d net,stations,id=a31p04a
IST097I DISPLAY ACCEPTED
IST350I DISPLAY TYPE = STATIONS
IST393I PU T4/5 MAJOR NODE A3162ZC, SUBAREA = 310
IST396I LNKSTA    STATUS     CTG GTG ADJNODE  ADJSA  NETID  ADJLS
IST397I A31P04A   NEVAC        1   1              0
IST610I                           LINE A31C04   - STATUS NEVAC
IST1454I 1 STATIONS(S) DISPLAYED FOR ID=A31P04A
IST314I END
```

Displaying all cross-subarea link stations:

```
d net,stations
IST097I DISPLAY ACCEPTED
IST350I DISPLAY TYPE = STATIONS
IST393I PU T4/5 MAJOR NODE ISTPUS , SUBAREA = 500
IST396I LNKSTA    STATUS     CTG GTG ADJNODE  ADJSA  NETID  ADJLS
IST397I 0016-S    ACTIV----I   1   1 A3162ZC    310   NETA
IST610I                           LINE 0016-L   - STATUS ACTIV----I
IST397I 0015-S    ACTIV----I   1   1 A0362ZC      3   NETA
IST610I                           LINE 0015-L   - STATUS ACTIV----I
IST393I PU T4/5 MAJOR NODE A0362ZC, SUBAREA = 3
IST396I LNKSTA    STATUS     CTG GTG ADJNODE  ADJSA  NETID  ADJLS
IST397I A03P08A   NEVAC        0   0              0
IST610I                           LINE A03C08   - STATUS NEVAC
IST397I A03P10A   NEVAC        1   1              0
IST610I                           LINE A03C10   - STATUS NEVAC
IST393I PU T4/5 MAJOR NODE A3162ZC, SUBAREA = 310
IST396I LNKSTA    STATUS     CTG GTG ADJNODE  ADJSA  NETID  ADJLS
IST397I A31P00A   NEVAC        1   1              0
IST610I                           LINE A31C00   - STATUS NEVAC
IST397I A31P01A   NEVAC        1   1              0
IST610I                           LINE A31C01   - STATUS NEVAC
IST397I A31P02A   NEVAC        1   1              0
IST610I                           LINE A31C02   - STATUS NEVAC
IST397I A31P03A   NEVAC        1   1              0
IST610I                           LINE A31C03   - STATUS NEVAC
IST397I A31P04A   NEVAC        1   1              0
IST610I                           LINE A31C04   - STATUS NEVAC
IST397I A31P05A   NEVAC        1   1              0
IST610I                           LINE A31C05   - STATUS NEVAC
IST397I A31P06A   NEVAC        1   1              0
IST610I                           LINE A31C06   - STATUS NEVAC
IST1454I 11 STATIONS(S) DISPLAYED
IST314I END
```

Displaying cross-subarea link stations, limiting output to 6 resources:

```
d net,stations,max=6
IST097I DISPLAY ACCEPTED
IST350I DISPLAY TYPE = STATIONS
IST393I PU T4/5 MAJOR NODE ISTPUS, SUBAREA = 1
IST1358I NO QUALIFYING MATCHES
IST393I PU T4/5 MAJOR NODE NCP3AA1, SUBAREA = 3
IST394I ADJACENT LINK STATIONS NOT OWNED BUT AWAITING ACTIVATION
IST395I LS4A3A4   LS4A3A3   LS4A3A2   LS4A3A1
IST396I LNKSTA    STATUS     CTG GTG ADJNODE  ADJSA  NETID  ADJLS
```

```
IST397I LS3A4A1   NEVAC        2   2
IST610I                            LINE LN3A4A1  - STATUS NEVAC
IST397I LS3A4A2   NEVAC        2   2
IST610I                             LINE LN3A4A2  - STATUS NEVAC
IST1315I DISPLAY TRUNCATED AT MAX = 6
IST1454I 6 STATIONS(S) DISPLAYED
IST314I END
```

DISPLAY STATS command

Display resource statistics:

```
►►──DISPLAY NET,STATS──,TYPE=VTAM──┬─────────────────────────────────────────────┬──────►◄
                                   │ ,MAX=DSPLYDEF_start_option_value            │
                                   │ ,──┬─MAX─┬──=──┬─*──────────────────────┬─┘
                                   │    └─NUM─┘     └─number_of_resources─┘
```

Display data compression statistics:

```
►►──DISPLAY NET,STATS──,TYPE=COMPRESS──────────────────────────────────────►◄
```

Display coupling facility structure statistics:

```
►►──DISPLAY NET,STATS──,TYPE=CFS──────────────────────────────────────────►

►──┬─────────────────────────────────────────────┬──────────────────────────►◄
   │ ,STRNAME=STRGR_start_option_value           │
   │ ,STRNAME=──┬─structure_name──────────────┬─┘
   │            ├─*────────────────────────────┤
   │            ├─EZBDVIPA──┬─────────────────┬┤
   │            │           └─┤ Entry Options ├┘
   │            └─EZBEPORT──┬─────────────────┬┤
   │                        └─┤ Entry Options ├┘
```

Entry Options:

```
├──┬──,DVIPA=dvipa_address──────────────────────────────────────────────────►
   │  ,LIST=list_number──────────────────────────────────────────────────────┤
   │  ,LIST=ALL──┬─────────────────────────────┬──────────────────────────────┤
   │             │ ,FROM=1                     │
   │             │ ,FROM=starting_list_number  │

►─┤ Scope Options ├──┤ Max Options ├──────────────────────────────────────────┤
```

Scope Options:

```
├──┬─────────────────────────────┬──────────────────────────────────────────┤
   │ ,SCOPE=ONLY                 │
   │ ,SCOPE=──┬─ALL──┬──────────┘
   │          └─ONLY─┘
```

Max Options:

```
├──┬─────────────────────────────────────────────┬──────────────────────────┤
   │ ,MAX=DSPLYDEF_start_option_value            │
   │ ,──┬─MAX─┬──=──┬─*──────────────────────┬─┘
   │    └─NUM─┘     └─number_of_resources─┘
```

Abbreviations

Operand	Abbreviation
DISPLAY	D
SCOPE=ALL	EVERY or E
SCOPE=ONLY	NONE or N
STRNAME	STRNM

Purpose

The DISPLAY STATS (statistics) command displays information about the network, such as the number of resources of each type, the values of certain start options, the MVS coupling facility structure, and data compression.

This information can be used with *z/OS Communications Server: SNA Migration* to calculate the amount of storage required for VTAM. For information on how to use the host-based storage information in this display, see the *z/OS Communications Server: SNA Migration*.

Attention: Depending on the size and configuration of your network, issuing this command from the console or from the ISTSTATS program operator might affect system performance. Issuing the DISPLAY STATS command from the console is not recommended.

When issued with TYPE=CFS to display the EZBDVIPA structure (STRNAME=EZBDVIPA), additional keywords can be specified to display information from the lists and list entries in the EZBDVIPA structure.

More specifically, for each claimed list, the output will display:

- The list number
- The DVIPA address
- The stack name (job name) and system name of the owning TCP stack
- The number of entries in the list
- For a list that is not being used for sequence number tracking, the takeover or giveback count
- For a list that is used for sequence number tracking, the next available sequence number is displayed.

A *claimed list* is one which has been associated with a DVIPA address and assigned an owning TCP stack.

Base your choice on the following conditions. If all claimed lists in the structure are displayed, the sum of the number of entries of all the lists will be one less than the current number of entries shown in message IST1377I. This is because list 0, which is used for structure maintenance, is never displayed.

If you specify . . .	Then . . .
A specific list number, but the list is not claimed	A message specifying LIST *listnumber* IS UNCLAIMED will be displayed.
A specific DVIPA address, but there are no claimed lists associated with that DVIPA	A message specifying NO CLAIMED LIST FOUND FOR THE SPECIFIED DVIPA will be displayed.

If you specify . . .	Then . . .
LIST=ALL and there are no claimed lists within the range requested	A message specifying NO CLAIMED LISTS FOUND will be displayed.
Requested list entry information (by the way of the SCOPE=ALL keyword)	The list entry key for each entry on the list will be displayed in hexadecimal format.

You can now perform the steps to display a specific claimed list.

When issued with TYPE=CFS to display the EZBEPORT structure (STRNAME=EZBEPORT), additional keywords can be specified to display information from the lists and list entries in the EZBEPORT structure.

More specifically, for each claimed list (that is, a list associated to a DVIPA), the output will display:

- The list number
- The DVIPA address
- The number of assigned ephemeral ports
- For each TCPIP stack associated with the DVIPA, the stack name (job name), system name of that TCP stack, and the number of ephemeral ports assigned to that stack

Base your choice on the following conditions:

If you specify . . .	Then . . .
A specific list number, but the list is not claimed	A message specifying LIST *listnumber* IS UNCLAIMED will be displayed.
A specific DVIPA address, but there are no claimed lists associated with that DVIPA	A message specifying NO CLAIMED LIST FOUND FOR THE SPECIFIED DVIPA will be displayed.
LIST=ALL and there are no claimed lists within the range requested	A message specifying NO CLAIMED LISTS FOUND will be displayed.
Requested list entry information (by the way of the SCOPE=ALL keyword)	The set of ephemeral ports for each TCPIP stack associated with that list will be displayed.

You can now perform the steps to display a specific claimed list.

Operands

DVIPA
Specifies a DVIPA address in dotted decimal format. All list headers pertaining to this DVIPA will be displayed.

FROM
Indicates the starting list number at which the search for claimed lists to be displayed begins. Valid only when LIST=ALL is specified.

LIST
Specifies the list number to display. If LIST=ALL is specified, the FROM keyword may be used to indicate where to begin searching for claimed lists.

MAX
Specifies the maximum number of output lines that VTAM displays for this

command. MAX is valid only when TYPE=VTAM or TYPE=CFS and STRNAME=EZBDVIPA or STRNAME=EZBEPORT are specified.

Attention: MAX=* might generate an undesirably large display. Do not use MAX=* until you understand the potential effect of this command on your console.

MAX=*
Specifies that the value of the DSPLYMAX start option is used to limit the display output.

MAX=number_of_resources
Specifies the maximum number of statistics to display. The valid range is 1–value of DSPLYMAX. The default is the value specified for the DSPLYDEF start option.

MAX=number_of_lines
Specifies the maximum number of lines of output to display when displaying information from the EZBDVIPA or EZBEPORT structure. The valid range is 1 to the value of DSPLYMAX. The default is the value specified for the DSPLYDEF start option.

NUM
A synonym for the MAX operand.

SCOPE
Specifies the desired scope of the display. This keyword is valid only when TYPE=CFS, STRNAME=EZBDVIPA or STRNAME=EZBEPORT, and either the DVIPA keyword or the LIST keyword is specified.

SCOPE=ALL
If STRNAME=EZBDVIPA is specified, displays the information from the list headers and the list entry key for each entry on the list. If STRNAME=EZBEPORT is specified, displays (for each TCPIP stack) the assigned ephemeral ports for that stack.

SCOPE=ONLY
Displays the information from the list headers only.

STRNAME
Specifies which VTAM coupling facility structure to display.

STRNAME=structure_name
Specifies the name of a VTAM coupling facility structure to display. The structure name can be 1 to 16 characters long.

STRNAME=*
Specifies that all VTAM structures are to be displayed.

STRNAME=EZBDVIPA
When the structure name explicitly specifies the EZBDVIPA structure, additional keywords may be specified to display information from the list headers and list entries within the EZBDVIPA structure.

STRNAME=EZBEPORT
When the structure name explicitly specifies the EZBEPORT structure, additional keywords may be specified to display information from the list headers and list entries within the EZBEPORT structure.

TYPE
Specifies what type of statistical information to display.

TYPE=VTAM
Displays information about the type and number of resources in the network and the values of certain start options.

TYPE=COMPRESS
Displays information about data compression.

TYPE=CFS
Displays attributes for the MVS coupling facility structure.

Resulting display

The resulting display shows:

- For TYPE=VTAM, a function ID for each resource type, the number of resources of each type, and the values of certain start options.
- For TYPE=COMPRESS, the number of half-sessions by active compression level that use data compression on input and output flows.

  Output values for adaptive compression levels are split into BASIC and FROZEN. BASIC indicates the number of half-sessions currently using compression tables in the adaptive mode. FROZEN indicates the number of half-sessions currently using static compression tables.

  Output values for sessions using run-length encoding (RLE) compression levels are also split into BASIC and FROZEN. BASIC indicates the number of half-sessions currently using compression tables in the basic mode. FROZEN does not apply to RLE compression.
- For TYPE=CFS, the attributes for the MVS coupling facility structure identified on the STRNAME operand.
- For TYPE=CFS with STRNAME=EZBDVIPA specified and either DVIPA or LIST specified, information on the contents of the list headers within the EZBDVIPA structure, and, if SCOPE=ALL is specified, the list entry keys for each list entry on the list.
- For TYPE=CFS with STRNAME=EZBEPORT specified and either DVIPA or LIST specified, information on the number of ephemeral ports assigned for each DVIPA plus each TCPIP stack associated with the DVIPA and the number of ephemeral ports assigned to that stack. If SCOPE=ALL is specified, the set of ephemeral ports assigned to each stack.

Examples

Displaying statistical information:

```
d net,stats,type=vtam
IST097I DISPLAY ACCEPTED
IST350I DISPLAY TYPE = STATS,TYPE=VTAM
IST1349I COMPONENT ID IS 5695-11701-10A
IST1345I    ID      VALUE        DESCRIPTION
IST1227I   151          0 = DEPENDENT LU TOTAL FOR ISTPUS
IST1227I   151         32 = DEPENDENT LU TOTAL FOR NCP3AB8
IST1227I    11          0 = CHANNEL-TO-CHANNEL ATTACHMENTS
IST1227I    61          0 = SNA DATA COMPRESSION SESSIONS
IST1227I    63         27 = RECOVERABLE SESSIONS
IST1227I    56          1 = TOTAL APPL SESSIONS
IST1227I    58          0 = LU6.2 SESSIONS
IST1227I    60          1 = ICSF ENCRYPTION SERVICES
IST1227I    67         33 = PU STATEMENTS UNDER SW LINES
IST1227I    15          0 = SNA PU TOTAL MAXBFRU
IST1227I    21          0 = ICA DEVICES
IST1227I    51         49 = ACTIVE LU TOTAL
IST1227I    10          0 = TOTAL LINE STATEMENTS FOR XCA MAJOR NODES
IST1227I    14          0 = CA CLUSTER CONTROLLER TOTAL
```

```
IST1227I     2        200 = VIT TABLE SIZE
IST1227I    65         70 = NUMBER OF LINES DEFINED
IST1227I     3        256 = IOBUF SIZE
IST1227I    47        511 = MAXIMUM SUBAREA
IST1227I    48         60 = DEFINED PU TOTAL
IST1227I    49          4 = ACTIVE PU TOTAL
IST1227I    16         39 = LOCAL NON-SNA TERMINALS
IST1227I    80         28 = NETWORK INDEPENDENT LU TOTAL
IST1227I    81          0 = DYNAMICALLY DEFINED LU TOTAL
IST1227I     6         17 = MAXBFRU FOR CHANNEL-ATTACHED CONTROLLERS
IST1227I     8          0 = XCA MAJOR NODES
IST1227I    74          0 = CROSS NETWORK APPL SESSIONS
IST1227I    17          0 = NETVIEW PIU TRACE BUFFER SIZE
IST1227I    18          2 = NETVIEW PIU TRACE BUFFERS
IST1227I    19          0 = NETVIEW SAW BUFFER SIZE
IST1227I    46         28 = INDEPENDENT LU TOTAL
IST1227I    52          0 = ACTIVE DEPENDENT LU TOTAL
IST1227I    66          0 = SWNET STATEMENTS
IST1227I    99        ICN = VTAM CONFIGURATION
IST1227I    70          0 = PATH STATEMENTS
IST1227I    77          0 = SAME DOMAIN LU6.2 SESSIONS
IST1227I    78          0 = SAME NETWORK MULTI-NODE LU6.2 SESSIONS
IST1227I    79          0 = CROSS NETWORK LU6.2 SESSION
IST1227I    50         71 = DEFINED LU TOTAL
IST1227I    57          1 = LU6.2 APPLICATIONS
IST1227I    53          0 = LOCAL LU-LU SESSIONS
IST1227I    55          1 = LU TOTAL TSO SESSIONS
IST1227I    71          0 = APPL - LU SESSIONS
IST1227I    73          0 = SAME NETWORK MULTI-NODE LU SESSIONS
IST1227I     5          2 = CHANNEL-ATTACHED CONTROLLERS
IST1227I    12          0 = TOTAL MAXBFRU FOR CTC ATTACHMENTS
IST1227I    13          0 = CTC TOTAL MAXBFRU CROSS DOMAIN
IST1227I    54          0 = PERSISTENT LU-LU SESSIONS
IST1227I    20          0 = NETVIEW SAW BUFFERS
IST1227I    22          2 = DESTINATION SUBAREAS
IST1227I   101         NO = CENTRAL DIRECTORY SERVER SUPPORT
IST1227I   123          0 = MPC READ BUFFER
IST1227I   163          1 = VIT DATA SPACE TABLE SIZE
IST1227I    64          2 = CURRENT NUMBER OF SESSION PARTNERS
IST1227I   100         13 = DYNAMIC DIRECTORY ENTRIES
IST1227I   102          1 = REGISTERED DIRECTORY ENTRIES
IST1227I   103          0 = SYSTEM DEFINED DIRECTORY ENTRIES
IST1227I   104          0 = ADJACENT END NODES
IST1227I   106          0 = CENTRAL DIRECTORY SERVER
IST1227I   107          0 = ADJACENT NETWORK NODES
IST1227I   108          7 = APPN CLASS OF SERVICE
IST1227I   109          1 = NETWORK NODES IN THE NETWORK
IST1227I   111          0 = CONNECTION NETWORKS
IST1227I   116          0 = INTERMEDIATE ROUTED SESSIONS
IST1227I   119          0 = CROSS NETWORK LU SESSIONS
IST1227I   120          0 = MULTIPATH CHANNEL MAJOR NODES
IST1227I   121         73 = MPC READ SUBCHANNEL ADDRESSES
IST1227I   122         73 = MPC WRITE SUBCHANNEL ADDRESSES
IST1227I   124          0 = MPC WRITE BUFFER
IST1227I   125          1 = APPLICATION SESSIONS
IST1227I   113          0 = PARALLEL SESSION PER LU
IST1227I   112          0 = SAME NETWORK MULTI-NODE APPL SESSIONS
IST1227I   130        YES = ANYNET/MVS SNA OVER TCP/IP INSTALLED
IST1227I   127          0 = TCP/IP MAJOR NODES
IST1227I   128          0 = MAXIMUM TCB VALUE FOR TCP/IP MAJOR NODES
IST1227I   129          0 = TCP/IP LU-LU SESSIONS
IST1227I   140          0 = MAXIMUM DIRECTORY SIZE
IST1227I   141        100 = MAXIMUM TRS ROUTING TREES
IST1227I   142          0 = END NODE TRANSMISSION GROUPS
IST1227I   143          0 = NETWORK NODE TRANSMISSION GROUPS
IST1227I   144          0 = VIRTUAL NODE TRANSMISSION GROUPS
IST1227I   152          0 = ACTIVE DEPENDENT LU REQUESTERS
```

```
IST1227I   153          0 = ACTIVE DLUR SERVED PU TOTAL
IST1227I   154          0 = ACTIVE DLUR SERVED LU TOTAL
IST1227I   155          0 = VR-BASED TRANSMISSION GROUPS
IST1227I   156          0 = CONNECTION NETWORK DYNAMIC TGS
IST1227I   157          1 = TRANSPORT RESOURCE LIST ENTRIES
IST1227I   159          0 = ADJACENT CLUSTER TABLE CPNAME ENTRIES
IST1227I   160          0 = CP-CP SESSIONS
IST1227I   161        170 = HIGHEST ELEMENT ADDRESS ASSIGNED
IST1227I   162        433 = HIGHEST EXTENDED ELEMENT ADDRESS ASSIGNED
IST1227I   164        143 = CURRENT ELEMENT ADDRESS TOTAL
IST1227I   165        371 = CURRENT EXTENDED ELEMENT ADDRESS TOTAL
IST1454I 92 STATISTICS DISPLAYED
IST314I END
```

Displaying statistical information, limiting output to five resources:

```
d net,stats,type=vtam,max=5
IST097I DISPLAY ACCEPTED
IST350I DISPLAY TYPE = STATS,TYPE=VTAM
IST1349I COMPONENT ID IS 5695-11701-401
IST1345I    ID      VALUE        DESCRIPTION
IST1227I   151          0 = DEPENDENT LU TOTAL FOR ISTPUS
IST1227I    11          0 = CHANNEL-TO-CHANNEL ATTACHMENTS
IST1227I    61          0 = SNA DATA COMPRESSION SESSIONS
IST1227I    63          2 = RECOVERABLE SESSIONS
IST1227I    56          0 = TOTAL APPL SESSIONS
IST1315I DISPLAY TRUNCATED AT MAX = 5
IST1454I 5 STATISTICS DISPLAYED
IST314I END
```

Displaying data compression statistics:

```
d net,stats,type=compress
IST097I DISPLAY ACCEPTED
IST350I DISPLAY TYPE = STATS,TYPE=COMPRESS
IST1435I LEVEL     INPUT                 OUTPUT
IST1176I                             BASIC    FROZEN
IST1177I   0       13910             13800    **NA**
IST1177I   1         489               164    **NA**
IST1177I   2         701               833       404
IST1177I   3         286                55        20
IST1177I   4          90               147        53
IST314I END
```

Displaying the default coupling facility structure:

```
d net,stats,type=cfs
IST097I DISPLAY ACCEPTED
IST350I DISPLAY TYPE = STATS,TYPE=CFS
IST1370I NETA.A01N IS CONNECTED TO STRUCTURE ISTGENERIC
IST1371I STRUCTURE TYPE = LIST - VERSION NUMBER = AD757CBBFFC67504
IST1517I LIST HEADERS = 4 - LOCK HEADERS = 4
IST1373I STORAGE ELEMENT SIZE = 1024
IST924I -------------------------------------------------------------
IST1374I                            CURRENT     MAXIMUM  PERCENT
IST1375I STRUCTURE SIZE              10240K      25088K      41
IST1376I STORAGE ELEMENTS                 0         972       0
IST1377I LIST ENTRIES                     1       48595       0
IST314I END
```

Displaying all coupling facility structures:

```
d net,stats,type=cfs,strname=*
IST097I DISPLAY ACCEPTED
IST350I DISPLAY TYPE = STATS,TYPE=CFS
IST1370I NETA.A01N IS CONNECTED TO STRUCTURE ISTMNPS
IST1371I STRUCTURE TYPE = LIST - VERSION NUMBER = AD757CB8DD617C85
IST924I -------------------------------------------------------------
```

```
IST350I DISPLAY TYPE = STATS,TYPE=CFS
IST1370I NETA.A01N IS CONNECTED TO STRUCTURE ISTGENERIC
IST1371I STRUCTURE TYPE = LIST - VERSION NUMBER = AD757CBBFFC67504
IST314I END
```

Displaying a multinode persistent session coupling facility structure:

```
d net,stats,type=cfs,strname=istmnps
IST097I DISPLAY ACCEPTED
IST350I DISPLAY TYPE = STATS,TYPE=CFS
IST1370I NETA.A01N IS CONNECTED TO STRUCTURE ISTMNPS
IST1371I STRUCTURE TYPE = LIST - VERSION NUMBER = AD757CB8DD617C85
IST1517I LIST HEADERS = 256 - LOCK HEADERS = 0
IST1373I STORAGE ELEMENT SIZE = 256
IST924I ------------------------------------------------------------
IST1374I                            CURRENT     MAXIMUM  PERCENT
IST1375I STRUCTURE SIZE              10240K      25088K      41
IST1376I STORAGE ELEMENTS              1188       25401       4
IST1377I LIST ENTRIES                  1050       12700       8
IST314I END
```

Displaying a multinode persistent session coupling facility structure with alternate structures:

```
d net,stats,type=cfs,strname=istmnps
IST097I DISPLAY ACCEPTED
IST350I DISPLAY TYPE = STATS,TYPE=CFS
IST1370I NETA.A81N IS CONNECTED TO STRUCTURE ISTMNPS
IST1371I STRUCTURE TYPE = LIST - VERSION NUMBER = AD885DB859A3A084
IST1517I LIST HEADERS = 256 - LOCK HEADERS = 0
IST1373I STORAGE ELEMENT SIZE = 256
IST924I ------------------------------------------------------------
IST1374I                            CURRENT     MAXIMUM  PERCENT
IST1375I STRUCTURE SIZE               6144K      12288K      50
IST1376I STORAGE ELEMENTS              3617       15422      23
IST1377I LIST ENTRIES                   696        7711       9
IST924I ------------------------------------------------------------
IST1519I ALTERNATE STRUCTURES ARE:
IST1567I ISTMNPS02         ISTMNPS01
IST314I END
```

Displaying the contents of the EZBDVIPA structure for all lists associated with DVIPA addresses.

```
D NET,STATS,TYPE=CFS,STRNAME=EZBDVIPA,LIST=ALL,SCOPE=ALL
IST097I DISPLAY ACCEPTED
IST350I DISPLAY TYPE = STATS,TYPE=CFS
IST1370I NETA.A01N IS CONNECTED TO STRUCTURE EZBDVIPA
IST1371I STRUCTURE TYPE = LIST
IST1517I LIST HEADERS = 1024 - LOCK HEADERS = 0
IST1373I STORAGE ELEMENT SIZE = 256
IST924I  ------------------------------------------------------------
IST1374I                            CURRENT     MAXIMUM  PERCENT
IST1375I STRUCTURE SIZE               6144K      10240K       60
IST1376I STORAGE ELEMENTS                32       16821        0
IST1377I LIST ENTRIES                     4        1682        0
IST924I  ------------------------------------------------------------
IST1834I LIST DVIPA SYSNAME TCPNAME    #ENTRIES    TGCOUNT SEQNUMBER
IST1835I    1 203.3.1.165
IST1836I            MVS165  TCPCS3            0          1
IST1835I    3 203.1.1.11
IST1836I            VIC011  TCPCS             2          2
IST1838I               LIST ENTRY KEYS:
IST1839I                 01000000000000010000000100000000
IST1839I                 02000000000000001077A83D000000000
IST1835I    4 203.1.1.11
```

```
IST1837I            VIC011  TCPCS             1                  18
IST1838I               LIST ENTRY KEYS:
IST1839I                 00000000000000000000000000000011
IST314I END
```

Displaying the contents of the EZBEPORT structure for all lists associated with DVIPA addresses:

```
d net,stats,type=cfs,strname=ezbeport,list=all
IST097I DISPLAY ACCEPTED
IST350I DISPLAY TYPE = STATS,TYPE=CFS
IST1370I NETA.A01N IS CONNECTED TO STRUCTURE EZBEPORT
IST1371I STRUCTURE TYPE = LIST
IST1517I LIST HEADERS = 1024 - LOCK HEADERS = 1024
IST1373I STORAGE ELEMENT SIZE = 256
IST924I -------------------------------------------------------------
IST1374I                            CURRENT     MAXIMUM  PERCENT
IST1375I STRUCTURE SIZE               6144K      10240K      60
IST1376I STORAGE ELEMENTS                32       16821       0
IST1377I LIST ENTRIES                     8        1682       0
IST924I -------------------------------------------------------------
IST1823I LIST DVIPA SYSNAME  TCPNAME      # Assigned Ports
IST1824I    1 203.3.1.165                                3
IST1825I            VIC011   TCPCS2                      2
IST1825I            VIC011   TCPCS                       0
IST1825I            MVS165   TCPCS                       1
IST1824I    4 203.1.1.11                                 5
IST1825I            MVS165   TCPCS3                      2
IST1825I            VIC011   TCPCS                       3
IST314I END
```

Displaying the contents of the EZBEPORT structure for all lists associated with the specific DVIPA address specified:

```
d net,stats,type=cfs,strname=ezbeport,dvipa=203.1.1.11
IST097I DISPLAY ACCEPTED
IST350I DISPLAY TYPE = STATS,TYPE=CFS
IST1370I NETA.A01N IS CONNECTED TO STRUCTURE EZBEPORT
IST1371I STRUCTURE TYPE = LIST
IST1517I LIST HEADERS = 1024 - LOCK HEADERS = 1024
IST1373I STORAGE ELEMENT SIZE = 256
IST924I -------------------------------------------------------------
IST1374I                            CURRENT     MAXIMUM  PERCENT
IST1375I STRUCTURE SIZE               6144K      10240K      60
IST1376I STORAGE ELEMENTS                32       16821       0
IST1377I LIST ENTRIES                     8        1682       0
IST924I -------------------------------------------------------------
IST1823I LIST DVIPA SYSNAME  TCPNAME      # Assigned Ports
IST1824I    4 203.1.1.11                                 5
IST1825I            MVS165   TCPCS3                      2
IST1825I            VIC011   TCPCS                       3
IST314I END
```

Displaying the contents of the EZBEPORT structure including a set of all the ephemeral ports associated with each TCP stack for all lists associated with DVIPA addresses:

```
d net,stats,type=cfs,strname=ezbeport,list=all,scope=all
IST097I DISPLAY ACCEPTED
IST350I DISPLAY TYPE = STATS,TYPE=CFS
IST1370I NETA.SSCP1A IS CONNECTED TO STRUCTURE EZBEPORT
IST1797I STRUCTURE TYPE = LIST
IST1517I LIST HEADERS = 1024 - LOCK HEADERS = 1024
IST1373I STORAGE ELEMENT SIZE = 256
IST924I -------------------------------------------------------------
IST1374I                            CURRENT     MAXIMUM  PERCENT
IST1375I STRUCTURE SIZE               6144K      10240K      60
```

```
IST1376I STORAGE ELEMENTS                32       16821       0
IST1377I LIST ENTRIES                     8        1682       0
IST924I -------------------------------------------------------------
IST1823I LIST DVIPA SYSNAME  TCPNAME      # Assigned Ports
IST1824I    1 203.3.1.165                                3
IST1825I            VIC011   TCPCS2                      2
IST1826I               PORTS:  1025 60234
IST1825I            VIC011   TCPCS                       0
IST1825I            MVS165   TCPCS                       1
IST1826I               PORTS: 24051
IST1824I    4 203.1.1.11                                12
IST1825I            MVS165   TCPCS3                      2
IST1826I               PORTS: 11576 23000
IST1825I            VIC011   TCPCS                      10
IST1826I               PORTS:  1027  2145  9815 20471 47611 48001
IST1827I                      51225 60223 61427 63000
IST314I END
```

DISPLAY STORUSE command

Display storage usage for applications:

```
►►──DISPLAY NET,STORUSE──,APPL=──┬─*──────────────────────────────────────────►
                                 │   ┌─,──────────────┐
                                 └───▼─(─appl_name─)──┘
                                 │
►──┬─,MAX=DSPLYDEF_start_option_value──┬──────────────────────────────────────►◄
   │                                   │
   └─,──┬─MAX─┬──=──┬─*──────────────┬──┘
        └─NUM─┘     └─number_of_resources─┘
```

Display storage usage for application jobs:

```
►►──DISPLAY NET,STORUSE──,JOBNAME=──┬─*──────────────────────────────────────►
                                    │   ┌─,──────────────┐
                                    └───▼─(─appl_job_name─)──┘
                                    │
►──┬─,MAX=DSPLYDEF_start_option_value──┬──────────────────────────────────────►◄
   │                                   │
   └─,──┬─MAX─┬──=──┬─*──────────────┬──┘
        └─NUM─┘     └─number_of_resources─┘
```

Display storage usage for data spaces:

```
►►──DISPLAY NET,STORUSE──,DSPNAME=──┬─*──────────────────────────────────────►
                                    │   ┌─,──────────────┐
                                    └───▼─(──data_space_name──)──┘
                                    │
►──┬─,MAX=DSPLYDEF_start_option_value──┬──────────────────────────────────────►◄
   │                                   │
   └─,──┬─MAX─┬──=──┬─*──────────────┬──┘
        └─NUM─┘     └─number_of_resources─┘
```

Display storage usage for storage pools:

```
►►──DISPLAY NET,STORUSE──┬─,POOL=*──────────────────────────────────────────┬──►
                         │                                                  │
                         └─,POOL=──┬─*──────────────────────────────────┬──┘
                                   │─SUMMARY────────────────────────────┤
                                   │   ┌─,──────────────┐               │
                                   └───▼─(──storage_pool_name──┬──────────┬─)──┘
                                                               └─,SUMMARY─┘
```

DISPLAY STORUSE

```
►─┬─,LIST=ALL──────────┬─┬─,MAX=DSPLYDEF_start_option_value──┬──────────────►
  │                    │ │                                   │
  └─,LIST=─┬─ALL──┬────┘ └─,─┬─MAX─┬─=─┬─*──────────────────┬─┘
           └─INUSE─┘          └─NUM─┘   └─number_of_resources─┘

►─┬─,POOLTYPE=ALL──────────┬──────────────────────────────────────────────►◄
  │                        │
  └─,POOLTYPE=─┬─ALL──────┬─┘
               ├─CSA──────┤
               └─PRIVATE──┘
```

Abbreviations

Operand	Abbreviation
DISPLAY	D

Purpose

The DISPLAY STORUSE (storage usage) command provides storage usage information for VTAM data spaces, modules, and storage pools.

You can specify the name of any one of the following:
- Application
- Application job
- Data space
- Storage pool

Operands

APPL
Specifies the applications for which storage usage will be displayed.

APPL=appl_name
Displays storage usage for one or more applications.

APPL=*
Displays storage usage for all applications.

DSPNAME
Specifies the data spaces for which storage usage information will be displayed.

DSPNAME=data_space_name
Displays storage usage for one or more VTAM data spaces.

DSPNAME=*
Displays storage usage for all VTAM data spaces.

JOBNAME
Specifies the VTAM application jobs for which storage usage will be displayed.

JOBNAME=appl_job_name
Displays storage usage for one or more VTAM application jobs.

JOBNAME=*
Displays storage usage for all VTAM application jobs.

LIST
Specifies whether storage information should be displayed about all pools or only those currently in use.

The LIST operand is valid only when all GETBLK pools are being displayed and the POOL, DSPNAME, APPLNAME, and JOBNAME operands are omitted from the DISPLAY STORUSE command.

LIST=ALL
Displays storage information about all pools, regardless of whether storage is currently allocated from that storage pool.

LIST=INUSE
Displays storage information only for pools that have been currently allocated from that storage pool.

MAX
Specifies the maximum number of output lines that VTAM displays for this command.

MAX=*
Specifies that the value of the DSPLYMAX start option limits the display output.

MAX=number_of_resources
Specifies the number of applications, application jobs, data spaces, or storage pools for which VTAM displays storage usage. The valid range is 1–value of DSPLYMAX. The default is the value specified for the DSPLYDEF start option.

Specifying MAX limits the display output. VTAM searches only for the number of instances that you have specified, stopping when it reaches that number. VTAM does not search any further. This saves processing time and gives you control over the amount of display output generated by the command. If fewer applications, application jobs, data spaces, or storage pools are found than you have specified on MAX, VTAM displays only the storage usage information for those found.

NUM
A synonym for the MAX operand.

POOL
Specifies the VTAM storage pools for which storage usage will be displayed. Use * to display a list of valid pool names available in your system.

POOL=storage_pool_name
Displays storage usage for one or more VTAM storage pools.

POOL=SUMMARY
Displays storage usage collectively for all storage pools and modules.

The information supplied by SUMMARY is independent of the information supplied by *storage_pool_name*. SUMMARY can be specified with or without *storage_pool_name*.

POOL=*
Displays storage usage collectively and individually for all VTAM storage pools, and collectively for all VTAM modules.

For descriptions of the functions and characteristics of the storage pools displayed, see the *z/OS Communications Server: SNA Network Implementation Guide*.

POOLTYPE
Specifies the type of pools for which storage information is to be displayed.

The POOLTYPE operand is valid only when all GETBLK pools are being displayed and the POOL, DSPNAME, APPLNAME, and JOBNAME operands are omitted from the DISPLAY STORUSE command.

POOLTYPE=ALL
Displays storage information about all pools.

POOLTYPE=CSA
Displays storage information only for pools in common service area (CSA) storage.

POOLTYPE=PRIVATE
Displays storage information only for pools in VTAM private storage.

Resulting display

The resulting display shows:
- Pool name or data space name
- Job name
- Application name
- Number of applications
- Current storage
- Maximum storage

Examples

Displaying storage usage for a specific pool:

```
d net,storuse,pool=sibext
IST097I DISPLAY ACCEPTED
IST350I DISPLAY TYPE = STORAGE USAGE
IST1242I POOL     CURRENT MAXIMUM
IST1243I SIBEXT       128     128
IST1454I 1 POOL(S) DISPLAYED
IST314I END
```

Displaying storage usage for pools, limiting output to five resources:

```
d net,storuse,max=5
IST097I  DISPLAY ACCEPTED
IST350I  DISPLAY TYPE = STORAGE USAGE
IST1242I  POOL     CURRENT MAXIMUM  POOL     CURRENT MAXIMUM
IST1243I  ACDEB          4       4  ACPCB          0       0
IST1243I  ADJCP          8       8  ADJNODE        0       0
IST1243I  ANDCB          0       0
IST1315I  DISPLAY TRUNCATED AT MAX = 5
IST1454I  5 RESOURCE(S) DISPLAYED
IST924I  -------------------------------------------------------
IST1244I  TOTAL PRIVATE  POOL STORAGE USAGE:     228     228
IST1244I  TOTAL COMMON   POOL STORAGE USAGE:      64      64
IST924I ------------------------------------------------------------
IST981I  VTAM PRIVATE: CURRENT = 5208K, MAXIMUM USED = 5253K
IST924I ------------------------------------------------------------
IST1565I CSA MODULES = 1384K
IST1565I CSA24 MODULES = 40K
IST1565I PRIVATE MODULES = 5205K
IST314I  END
```

Displaying storage usage for pools, in CSA storage that have been currently allocated from that storage pool:

```
d net,storuse,pooltype=csa,list=inuse
IST097I DISPLAY ACCEPTED
IST350I DISPLAY TYPE = STORAGE USAGE
IST1242I POOL     CURRENT MAXIMUM  POOL     CURRENT MAXIMUM
IST1243I COS           16      16  CPWACSA        4       4
```

```
IST1243I CPWAPVT        4       4  EPTDVT         8       8
IST1243I ERICPOOL       8       8  ERTE           4       4
IST1243I FMCB          16      16  NDREC          8       8
IST1243I RUPEPRIV      16      16  UTILPVTS      20      20
IST1454I 10 POOL(S) DISPLAYED
IST924I -------------------------------------------------------------
IST1244I TOTAL PRIVATE  POOL STORAGE USAGE:     220     220
IST1244I TOTAL COMMON   POOL STORAGE USAGE:      68      68
IST924I -------------------------------------------------------------
IST981I VTAM PRIVATE: CURRENT = 585K, MAXIMUM USED = 639K
IST924I -------------------------------------------------------------
IST1565I CSA MODULES = 1384K
IST1565I CSA24 MODULES = 32K
IST1565I PRIVATE MODULES = 5500K
IST314I END
```

Displaying storage usage for pools, in private storage that have been currently allocated from that private storage pool:

```
d net,storuse,pooltype=private,list=inuse
IST097I DISPLAY ACCEPTED
IST350I DISPLAY TYPE = STORAGE USAGE
IST1242I POOL     CURRENT MAXIMUM  POOL     CURRENT MAXIMUM
IST1243I ACDEB          4       4  CDRSC         32      32
IST1243I DECB           4       4  DISKIO         8       8
IST1243I DMTSQ          4       4  FMCBEXT        4       4
IST1243I LMTABLE        4       4  NIDCB          4       4
IST1243I PAQ            8       8  POWEPRIV       8       8
IST1243I POWMPRIV       8       8  PULURDTE       4       4
IST1243I RUPECOMM       4       4  SRTE          20      20
IST1243I SSCPFMCB      16      16  UTILCSAL       4       4
IST1243I UTILCSAS      20      20  UTILPVTL      20      20
IST1243I WREEID         8       8
IST1454I 19 POOL(S) DISPLAYED
IST924I -------------------------------------------------------------
IST1244I TOTAL PRIVATE  POOL STORAGE USAGE:     220     220
IST1244I TOTAL COMMON   POOL STORAGE USAGE:      68      68
IST924I -------------------------------------------------------------
IST981I VTAM PRIVATE: CURRENT = 585K, MAXIMUM USED = 639K
IST924I -------------------------------------------------------------
IST1565I CSA MODULES = 1384K
IST1565I CSA24 MODULES = 32K
IST1565I PRIVATE MODULES = 5500K
IST314I END
```

Displaying storage usage for all data spaces, limiting output to 7 resources:

```
d net,storuse,dspname=*,max=7
IST097I DISPLAY ACCEPTED
IST350I DISPLAY TYPE = STORAGE USAGE
IST1238I DSPNAME  CURRENT MAXIMUM  QUEUED
IST1239I ISTNMPDS       0       0       0
IST1239I ISTNMSDS       0       0       0
IST924I -------------------------------------------------------------
IST1240I DSPNAME  CURRENT MAXIMUM JOBNAME  APPL     COUNT
IST1241I ISTFC8E0       8       8 VTAM     SSCP1A   1
IST1241I IST68072       0       0 ECHO     APPL1    1
IST1241I IST72596       0       0 ECHO     APPL2    1
IST1241I IST30B99       0       0 ECHO     APPL3    1
IST1241I ISTITDS1       0       0
IST1454I 7 DSPNAME(S) DISPLAYED
IST314I END
```

Displaying storage usage for a specific data space:

```
d net,storuse,dspname=istnmsds
IST097I DISPLAY ACCEPTED
IST350I DISPLAY TYPE = STORAGE USAGE
```

```
IST1238I DSPNAME  CURRENT MAXIMUM  QUEUED
IST1239I ISTNMSDS       0       0       0
IST1454I 1 DSPNAME(S) DISPLAYED
IST314I END
```

Displaying storage usage for all applications, limiting output to four resources:

```
d net,storuse,appl=*,max=4
IST097I DISPLAY ACCEPTED
IST350I DISPLAY TYPE = STORAGE USAGE
IST1240I DSPNAME  CURRENT MAXIMUM JOBNAME  APPL     COUNT
IST1241I ISTFC8E0       8       8 VTAM     SSCP1A   1
IST1241I IST68072       0       0 ECHO     APPL1    1
IST1241I IST72596       0       0 ECHO     APPL2    1
IST1241I IST30B99       0       0 ECHO     APPL3    1
IST1315I DISPLAY TRUNCATED AT MAX = 4
IST1454I 4 APPL(S) DISPLAYED
IST314I END
```

Displaying storage usage for a specific job:

```
d net,storuse,jobname=echo31e
IST097I DISPLAY ACCEPTED
IST350I DISPLAY TYPE = STORAGE USAGE
IST1240I DSPNAME  CURRENT MAXIMUM JOBNAME  APPL     COUNT
IST1241I 00002IST       0       0 ECHO31E  ECHO50A  1
IST1241I 00003IST       0       0 ECHO31E  ECHO50   1
IST314I END
```

Displaying storage usage for a specific application:

```
d net,storuse,appl=echo02a
IST097I DISPLAY ACCEPTED
IST350I DISPLAY TYPE = STORAGE USAGE
IST1240I DSPNAME  CURRENT MAXIMUM JOBNAME  APPL     COUNT
IST1241I 00001IST       4      16 ECHO31E  ECHO02A  1
IST314I END
```

Displaying storage usage summary information:

```
d net,storuse,pool=summary
IST097I DISPLAY ACCEPTED
IST350I DISPLAY TYPE = STORAGE USAGE
IST1244I TOTAL PRIVATE  POOL STORAGE USAGE:     228     228
IST1244I TOTAL COMMON   POOL STORAGE USAGE:      76      76
IST924I -------------------------------------------------------------
IST981I VTAM PRIVATE: CURRENT = 4550K, MAXIMUM USED = 4603K
IST924I -------------------------------------------------------------
IST1565I CSA MODULES = 1384K
IST1565I CSA24 MODULES = 40K
IST1565I PRIVATE MODULES = 5205K
IST314I END
```

DISPLAY TABLE command

```
►►──DISPLAY NET,TABLE──,ID=table_name──────────────────────────────────►

   ┌─,SCOPE=ONLY──────────────────────────────────────┐
►──┼──────────────────────────────────────────────────┼──────────────────►◄
   └─,SCOPE=──┬─ONLY──────────────────────────────────┬┘
              │          ┌─,MAX=DSPLYDEF_start_option_value─┐│
              └─ALL──────┼──────────────────────────────────┼┘
                         └─,MAX=──┬─*──────────────────────┬┘
                                  └─number_of_resources────┘
```

Abbreviations

Operand	Abbreviation
DISPLAY	D
SCOPE=ALL	EVERY or E
SCOPE=ONLY	NONE or N

When using an abbreviation in place of an operand, code the abbreviation exactly as shown in the table. For example, when coding the abbreviation for SCOPE=ALL, code only EVERY or E. Do not code SCOPE=E.

Purpose

This command displays the table type and the number of resources that are associated with the table (use count) and identifies the users of a table. The tables displayed include:

- Associated LU (ASLTAB)
- Class of Service (COSTAB)
- Logon interpret (LOGTAB)
- Logon mode (MODETAB)
- Message-flooding prevention (FLDTAB)
- Model name (MDLTAB)
- USS (USSTAB)

Notes:

1. SAW data filter tables are not displayed by this command.
2. The CMIP services directory definition file is not displayed by this command.

Operands

ID=table_name
Specifies the name of the table.

MAX
Specifies the maximum number of resources that VTAM displays for this command.

The MAX operand is only valid when SCOPE=ALL is specified.

MAX=*
Specifies that the value of the DSPLYMAX start option is used to limit the display output.

MAX=number_of_resources
Specifies the number of resources to display for this command. The valid range is 1–value of DSPLYMAX. The default is the value specified for the DSPLYDEF start option.

Specifying MAX limits the display output. VTAM searches only for the number of instances that you have specified. When that number is found, VTAM does not search any further. This saves processing time for the command and gives you control over the amount of display output generated by the command. If fewer resources are found than you have specified on MAX, VTAM displays only the resources that are found.

SCOPE
Specifies whether to display a list of users of the table.

SCOPE=ALL
Displays the name of each resource associated with the table. For a COS table, the use count might be higher than the number of user resource names displayed for SCOPE=ALL, if the COS table is used by a type 4 or type 5 physical unit for multiple networks.

SCOPE=ONLY
Does not display the names of the resources associated with the table.

Resulting display

The resulting display shows:

- For SCOPE=ONLY, the table name, type, and use count
- For SCOPE=ALL, the table name, type, use count, and the resources associated with the table

Note: If the ID operand specifies the current value of the DYNMODTB start option, ISTCDRDY is displayed as a resource using the table.

Examples

Displaying all resources for an associated LU table:

```
d net,table,id=asltab1,scope=all
IST097I DISPLAY ACCEPTED
IST986I TABLE=ASLTAB1  TYPE=ASLTAB  USE COUNT=62
IST987I THE RESOURCES THAT USE THE TABLE ARE:
IST988I A04D88A1 A04D88A2 A04D88A3
IST988I A04D8817 A04D8818 A04D8819
IST988I A04D881A A04D881B A04D881C
IST988I A04D881D A04D881E A04D881F
IST988I C23MMNLU A04MMNLU
IST1454I 14 RESOURCE(S) DISPLAYED
IST314I END
```

Displaying all resources for a Class of Service table:

```
d net,table,id=istsdcos,scope=all
IST097I DISPLAY ACCEPTED
IST986I TABLE=ISTSDCOS TYPE=COSTAB  USE COUNT=1
IST987I THE RESOURCES THAT USE THE TABLE ARE:
IST988I ISTPUS
IST1454I 1 RESOURCE(S) DISPLAYED
IST314I END
```

Displaying all resources for a message-flooding prevention table:

```
d net,table,id=istmsfld,scope=all
IST097I DISPLAY ACCEPTED
IST986I TABLE=ISTMSFLD TYPE=FLDTAB  USE COUNT=1
IST987I THE RESOURCES THAT USE THE TABLE ARE:
IST988I ISTNOP
IST1454I 1 RESOURCE(S) DISPLAYED
IST314I END
```

Displaying the use count for a logon interpret table:

```
d net,table,id=interp,scope=only
IST097I DISPLAY ACCEPTED
IST986I TABLE=INTERP   TYPE=LOGTAB  USE COUNT=832
IST314I END
```

Displaying all resources for a logon mode table:

```
d net,table,id=amodetab,scope=all
IST097I DISPLAY ACCEPTED
IST986I TABLE=AMODETAB TYPE=MODETAB USE COUNT=1227
IST987I THE RESOURCES THAT USE THE TABLE ARE:
IST988I A04I0421 A04I0422 A04I0423
IST988I A04I0424 A04I0425 A04I0431
IST988I A04D52AA A04D52AB A04D52AC
IST988I A04D52AD A04D52AE A04D52AF
IST988I A04D52C1 A04D52C2 A04D52C3
IST988I A04D52C4 A04D52C5 A04D52C6
IST988I A04D52C7 A04D52C8 A04D52C9
IST988I A04D52CA A04D52CB A04D52CC
IST988I A04D52CD A04D52CE A04D52CF
IST1454I 27 RESOURCE(S) DISPLAYED
IST314I END
```

Displaying all resources for a model name table:

```
d net,table,id=mdltab1,scope=all
IST097I DISPLAY ACCEPTED
IST986I TABLE=MDLTAB1  TYPE=MDLTAB  USE COUNT=61
IST987I THE RESOURCES THAT USE THE TABLE ARE:
IST1154I NETA.A03D88A1     NETA.A03D88A2     NETA.A03D88A3
IST1154I NETA.A03D88A4     NETA.A03D88A5     NETA.A03D88A6
IST1154I NETA.A03D88A7     NETA.A03D88A8     NETA.A03D88A9
IST1154I NETA.A03D88AA     NETA.A03D88AB     NETA.A03D88AC
IST1154I NETA.A03D88AD     NETA.A03D88AE     NETA.A03D88AF
IST1154I NETA.A03D8871     NETA.A03D8872     NETA.A03D8873
IST1154I NETA.A03D8874     NETA.A03D8875     NETA.A03D8876
IST1154I NETA.A03D8877     NETA.A03D8878     NETA.A03D8879
IST1154I NETA.A03D887A     NETA.A03D887B     NETA.A03D887C
IST1154I NETA.A03D887D     NETA.A03D887E     NETA.A03D887F
IST1154I NETA.A03D8841     NETA.A03D8842     NETA.A03D8843
IST1154I NETA.A03D8844     NETA.A03D8845     NETA.A03D8846
IST1154I NETA.A03D8847     NETA.A03D8848     NETA.A03D8849
IST1154I NETA.A03D884A     NETA.A03D884B     NETA.A03D884C
IST1154I NETA.A03D884D     NETA.A03D884E     NETA.A03D884F
IST1154I NETX.A03D8811     NETX.A03D8812     NETX.A03D8813
IST1154I NETX.A03D8814     NETX.A03D8815     NETX.A03D8816
IST1154I NETX.A03D8817     NETX.A03D8818     NETX.A03D8819
IST1154I NETX.A03D881A     NETX.A03D881B     NETX.A03D881C
IST1154I NETX.A03D881D     NETX.A03D881E     NETX.A03D881F
IST1154I NETA.A03MMNLU
IST1454I 61 RESOURCE(S) DISPLAYED
IST314I END
```

Displaying all resources for a USS table:

```
d net,table,id=ausstab,scope=all
IST097I DISPLAY ACCEPTED
IST986I TABLE=AUSSTAB  TYPE=USSTAB  USE COUNT=912
```

```
IST987I THE RESOURCES THAT USE THE TABLE ARE:
IST988I A04D88A1 A04D88A2 A04D88A3
IST988I A04D88A4 A04D88A5 A04D88A6
IST988I A04D52CD A04D52CE A04D52CF
IST988I A04PT88A A04PT89A A04PT92A
IST1454I 12 RESOURCE(S) DISPLAYED
IST314I END
```

DISPLAY TERMS command

```
►►──DISPLAY NET,TERMS──┬──────────────────────────────────────────────────►
                       │                          (1)
                       └─,ID=──┬─name──────────────┬──┘
                               │          ┌──,──┐   │
                               └─(──────name──────)─┘

►──┬─,MAX=DSPLYDEF_start_option_value──┬──┬─,SCOPE=ALL──────────────┬──►◄
   │                                   │  │                         │
   └─,MAX=──┬─*──────────────────────┬──┘  └─,SCOPE=──┬─ALL──────────┬─┘
            └─number_of_resources────┘                │              │
                                                      │ ┌─ACT────────┐
                                                      │ ├─ACTONLY────┤
                                                      │ ├─ACTSESS────┤
                                                      │ ├─ALL────────┤
                                                      │ ├─CONCT──────┤
                                                      │ ├─INACT──────┤
                                                      │ ├─INACTONLY──┤
                                                      │ ├─PENDING────┤
                                                      │ └─RESET──────┘
```

Notes:

1 Depending on the value of the DSPLYWLD start option, wildcard values can be used for this operand.

Abbreviations

Operand	Abbreviation
DISPLAY	D
SCOPE=ACT	ACT or A
SCOPE=ACTONLY	ACTONLY
SCOPE=ACTSESS	ACTSESS
SCOPE=ALL	EVERY or E
SCOPE=CONCT	CONCT
SCOPE=INACT	INACT or I
SCOPE=INACTONLY	INACTONL
SCOPE=PENDING	PEND
SCOPE=RESET	RESET

When using an abbreviation in place of an operand, code the abbreviation exactly as shown in the table. For example, when coding the abbreviation for SCOPE=ALL, code only EVERY or E. Do not code SCOPE=E.

Purpose

The DISPLAY TERMS (terminals) command displays the status of device-type logical units (terminals) that are in active major nodes. The command does not display information about independent LUs.

Notes:

1. In a domain that has many terminals, this command might result in an undesirably large display, especially if the SCOPE=ALL operand, which is the default, is used. You can limit the display by using a more restrictive SCOPE value and by specifying the desired major node or nodes on the ID operand.
2. To display device-type logical units independently of the major nodes that contain them, use the DISPLAY RSCLIST command with IDTYPE=TERMS.

Operands

ID=name

Specifies the name of one or more active NCP, local SNA, local non-SNA, or switched major nodes whose device-type LUs are to be displayed.

Depending on the value of the DSPLYWLD start option, wildcard values can be used for this operand. For more information about using wildcards, see “Using wildcard names” on page 11.

Attention: Specifying a wildcard name might degrade performance because VTAM checks every major node in the network.

MAX

Specifies the maximum number of terminals that VTAM displays for this command.

MAX=*

Specifies that the value of the DSPLYMAX start option is used to limit the display output.

MAX=number_of_resources

Specifies the number of terminals that VTAM displays for this command. The valid range is 1–value of DSPLYMAX. The default is the value specified for the DSPLYDEF start option.

Specifying MAX limits the display output. VTAM searches only for the number of instances that you have specified. When that number is found, VTAM does not search any further. This saves processing time for the command and gives you control over the amount of display output generated by the command. If fewer terminals are found than you have specified on MAX, VTAM displays only the terminals that are found.

SCOPE

Specifies the desired scope of the display.

Note: If you specify the SCOPE operand without specifying a value SCOPE=ALL is assumed.

SCOPE=ACT

Specifies that information is to be displayed about all active, pending, and connectable device-type logical units within the specified major nodes (or within all major nodes if the ID operand is omitted). If this display is undesirably large, you can use SCOPE=ACTONLY or SCOPE=CONCT to further limit the display.

SCOPE=ACTONLY

Specifies that information is to be displayed about all device-type logical units in an active state within the specified major nodes (or within all major nodes if the ID operand is omitted). The display does **not** include terminals in pending or connectable states. If no terminals are found in an active

state, you can use SCOPE=ACT to broaden the scope of the display to include terminals in active, connectable, and pending states.

SCOPE=ACTSESS
Specifies that information is to be displayed about all device-type logical units that are active with sessions within the specified major nodes (or within all major nodes if the ID operand is omitted).

SCOPE=ALL
Specifies that information is to be displayed about all device-type logical units (regardless of their status) within the specified major nodes (or within all major nodes if the ID operand is omitted).

SCOPE=CONCT
Specifies that information is to be displayed about all device-type logical units in a CONCT (connectable) state within the specified major nodes (or within all major nodes if the ID operand is omitted). If no terminals are found in a connectable state, you can use SCOPE=ACT to broaden the scope of the display to include terminals in active, connectable, and pending states.

SCOPE=INACT
Specifies that information is to be displayed about all inactive device-type logical units within the specified major nodes (or within all major nodes if the ID operand is omitted). If this display is undesirably large, you can use SCOPE=INACTONLY or SCOPE=RESET to further limit the display.

SCOPE=INACTONLY
Specifies that information is to be displayed about all inactive device-type logical units within the specified major nodes (or within all major nodes if the ID operand is omitted). Resources in a RESET state are not included in the SCOPE=INACTONLY display.

SCOPE=PENDING
Specifies that information is to be displayed about all pending device-type logical units within the specified major nodes (or within all major nodes if the ID operand is omitted). A pending state is a transient state to or from the fully active state.

SCOPE=RESET
Specifies that information is to be displayed about all device-type logical units in a RESET state within the specified major nodes (or within all major nodes if the ID operand is omitted).

Resulting display

For each major node with terminals, the resulting display shows:
- The major node name
- The line name and status (if the terminal is attached over a line)
- The name and status of the associated physical unit (if any)
- The name and status of the logical unit

Note: Physical units and logical units in a switched major node are always listed under the switched major node and never under the NCP or channel-attachment major node containing the switched link through which they are attached. To determine the name of this NCP or channel-attachment major node and line, enter a “DISPLAY ID command” with ID=*pu_name* or ID=*lu_name*.

Examples

Displaying terminals within a specific node:

```
d net,terms,id=a50local
IST097I DISPLAY  ACCEPTED
IST350I DISPLAY TYPE = LOGICAL UNITS/TERMS
IST351I LOCAL 3270 MAJOR NODE = A50LOCAL
IST089I A50A720  TYPE = LOGICAL UNIT     , NEVAC      ,CUA=0720
IST089I A50A721  TYPE = LOGICAL UNIT     , ACTIV      ,CUA=0721
IST089I A50A722  TYPE = LOGICAL UNIT     , ACT/S      ,CUA=0722
IST089I A50A723  TYPE = LOGICAL UNIT     , ACTIV      ,CUA=0723
IST089I A50A724  TYPE = LOGICAL UNIT     , ACTIV      ,CUA=0724
IST089I A50A725  TYPE = LOGICAL UNIT     , ACTIV      ,CUA=0725
IST089I A50A726  TYPE = LOGICAL UNIT     , NEVAC      ,CUA=0726
IST1454I 7 RESOURCE(S) DISPLAYED FOR ID=A50LOCAL
IST314I END
```

Displaying all terminals:

```
d net,terms
IST097I DISPLAY ACCEPTED
IST350I DISPLAY TYPE = LOGICAL UNITS/TERMS
IST353I SWITCHED SNA MAJOR NODE = ISTDSWMN
IST146I LINE NAME = J000400B, STATUS = ACTIV
IST359I ATTACHMENT = SWITCHED
IST089I A04P88A  TYPE = PU_T2            , ACTIV---X-
IST355I LOGICAL UNITS:
IST080I A04D88A1 ACTIV---X- A04D88A2 ACTIV---X- A04D88A3 ACT/S---X-
IST080I A04D88A4 ACTIV---X- A04D88A5 ACTIV---X- A04D88A6 ACTIV---X-
IST080I A04D88A7 ACTIV---X- A04D88A8 ACTIV---X- A04D88A9 ACTIV---X-
IST080I A04D88AA ACTIV---X- A04D88AB ACT/S---X- A04D88AC ACT/S---X-
IST080I A04D88AD ACT/S---X- A04D88AE ACT/S---X- A04D88AF ACT/S---X-
IST146I LINE NAME = J0004011, STATUS = ACTIV
IST359I ATTACHMENT = SWITCHED
IST089I A04P887  TYPE = PUT_2            , ACTIV---X-
IST355I LOGICAL UNITS:
IST080I A04D8871 ACTIV---X- A04D8872 ACTIV---X- A04D8873 ACTIV---X-
IST080I A04D8874 ACTIV---X- A04D8875 ACTIV---X- A04D8876 ACTIV---X-
IST080I A04D8877 ACTIV---X- A04D8878 ACTIV---X- A04D8879 ACTIV---X-
IST080I A04D887A ACTIV---X- A04D887B ACT/S---X- A04D887C ACT/S---X-
IST080I A04D887D ACT/S---X- A04D887E ACT/S---X- A04D887F ACT/S---X-
IST146I LINE NAME = J0004017, STATUS = ACTIV
IST359I ATTACHMENT = SWITCHED
IST089I A04P884  TYPE = PUT_2            , ACTIV---X-
IST355I LOGICAL UNITS:
IST080I A04D8841 ACTIV---X- A04D8842 ACT/S---X- A04D8843 ACT/S---X-
IST080I A04D8844 ACT/S---X- A04D8845 ACTIV---X- A04D8846 ACTIV---X-
IST080I A04D8847 ACTIV---X- A04D8848 ACTIV---X- A04D8849 ACTIV---X-
IST080I A04D884A ACTIV---X- A04D884B ACT/S---X- A04D884C ACT/S---X-
IST080I A04D884D ACT/S---X- A04D884E ACT/S---X- A04D884F ACT/S---X-
IST146I LINE NAME = J000401D, STATUS = ACTIV
IST359I ATTACHMENT = SWITCHED
IST089I A04P881  TYPE = PUT_2            , ACTIV---X-
IST355I LOGICAL UNITS:
IST080I A04D8811 ACTIV---X- A04D8812 ACT/S---X- A04D8813 ACTIV---X-
IST080I A04D8814 ACTIV---X- A04D8815 ACT/S---X- A04D8816 ACTIV---X-
IST080I A04D8817 ACTIV---X- A04D8818 ACTIV---X- A04D8819 ACTIV---X-
IST080I A04D881A ACTIV---X- A04D881B ACTIV---X- A04D881C ACTIV---X-
IST080I A04D881D ACT/S---X- A04D881E ACT/S---X- A04D881F ACTIV---X-
IST1454I 60 RESOURCE(S) DISPLAYED
IST314I END
```

Displaying terminals, limiting output to three resources:

```
d net,terms,max=3
IST097I DISPLAY ACCEPTED
IST350I DISPLAY TYPE = LOGICAL UNITS/TERMS
```

```
IST354I PU T4/5 MAJOR NODE = NCP3AA1
IST146I LINE NAME = LN3A1, STATUS = NEVAC
IST359I ATTACHMENT = LEASED
IST089I P3A3767A TYPE = PU_T1            , NEVAC
IST355I LOGICAL UNITS:
IST080I L3A3767A NEVAC
IST089I P3A3274A TYPE = PU_T2            , NEVAC
IST355I LOGICAL UNITS:
IST080I L3A3278A NEVAC      L3A3279A NEVAC
IST1315I DISPLAY TRUNCATED AT MAX = 3
IST1454I 3 RESOURCE(S) DISPLAYED
IST314I END
```

DISPLAY TGPS command

```
►►─DISPLAY NET,TGPS──┬──────────────────────────────────────────────────────┬──►
                     │                                                (1)   │
                     └─,ID=──┬─tg_profile_name──────────────────────────────┬─┘
                             │   ┌──────────────────────────────────┐        │
                             │   ▼                                  │        │
                             └──────(─tg_profile_name─,─────────────)────────┘

   ┌─,MAX=DSPLYDEF_start_option_value─┐
►──┤                                  ├──────────────────────────────────────►◄
   └─,MAX=──┬─*──────────────────────┬─┘
            └─number_of_resources────┘
```

Notes:

1 Depending on the value of the DSPLYWLD start option, wildcard values can be used for this operand.

Abbreviations

Operand	Abbreviation
DISPLAY	D
TGPS	TGP

Purpose

The DISPLAY TGPS (transmission group profiles) command displays the currently defined TG profiles by name, along with the transmission group characteristics that they represent. For more information on defining a transmission group profile, see the *z/OS Communications Server: SNA Resource Definition Reference*. This command is valid only when it is issued at an APPN node (network node, end node, interchange node, or migration data host).

Operands

ID=tg_profile_name
Specifies the name of one or more transmission group profiles to display. If you omit the ID operand, all profiles are displayed.

Depending on the value of the DSPLYWLD start option, wildcard values can be used for this operand. For more information about using wildcards, see “Using wildcard names” on page 11.

Attention: Specifying a wildcard name might degrade performance because VTAM checks every transmission group profile in the network.

MAX
Specifies the maximum number of transmission group profiles that VTAM displays for this command.

MAX=*
Specifies that the value of the DSPLYMAX start option is used to limit the display output.

MAX=number_of_resources
Specifies the number of transmission group profiles that VTAM displays for

this command. The valid range is 1–value of DSPLYMAX. The default is the value specified for the DSPLYDEF start option.

Specifying MAX limits the display output. VTAM searches only for the number of instances that you have specified. When that number is found, VTAM does not search any further. This saves processing time for the command and gives you control over the amount of display output generated by the command. If fewer transmission group profiles are found than you have specified on MAX, VTAM displays only the transmission group profiles that are found.

Resulting display

The resulting display shows the TG profile names and the TG characteristics that are defined to VTAM. The TG characteristics are shown in a 16-byte hex string.

Byte	Description
1	Flag byte. This byte is zero when you display a TG profile, but other values might appear when you display the TG characteristics for an active resource (for example, the output of the DISPLAY ADJCP command).
2	Capacity. This value corresponds to the CAPACITY value coded in the TGP definition statement. The displayed value is an internal representation of the coded value. For more information on how the CAPACITY value coded in the TG profile is mapped to the internal representation used by VTAM, see the *z/OS Communications Server: SNA Resource Definition Reference*.
3–7	Reserved (zero)
8	Cost per unit time. This value corresponds to the COSTTIME value coded in the TGP definition statement.
9	Cost per byte. This value corresponds to the COSTBYTE value coded in the TGP definition statement.
10	Reserved (zero)
11	Security. This value corresponds to the SECURITY value coded in the TGP definition statement as follows: **X'01'** UNSECURE **X'20'** PUBLIC **X'40'** UNDERGRO **X'60'** SECURE **X'80'** GUARDED **X'A0'** ENCRYPT **X'C0'** SHIELDED
12	Propagation delay. This value corresponds to the PDELAY value coded in the TGP definition statement as follows: **X'4C'** NEGLIGIB **X'71'** TERRESTR **X'91'** PACKET **X'99'** LONG
13	Reserved (zero)
14–16	User-defined. These values correspond to the values coded for UPARM1, UPARM2, and UPARM3 respectively in the TGP definition statement.

Examples

Displaying a specific transmission group profile:

```
d net,tgps,id=secure
IST097I DISPLAY ACCEPTED
IST350I DISPLAY TYPE = TGPS
IST1107I TGP NAME TG CHARACTERISTICS
IST1108I SECURE   007500000000000969600604C00000000
IST1454I 1 TGP(S) DISPLAYED FOR ID=SECURE
IST314I END
```

Displaying all transmission group profiles:

```
d net,tgps
IST097I DISPLAY ACCEPTED
IST350I DISPLAY TYPE = TGPS
IST1107I TGP NAME TG CHARACTERISTICS
IST1108I UNSECURE 007500000000000646400014C00000000
IST1108I UNDERGRO 007500000000007D7D00404C00000000
IST1108I SECURE   007500000000000969600604C00000000
IST1108I GUARDED  00750000000000C8C800804C00000000
IST1108I SHIELDED 00750000000000C8FF00C04C00000000
IST1108I TGPL11   007500000000000000000014C00000000
IST1108I TGPL12   00B400000000000000000604C00808080
IST1108I TGPL21   004300000000000000000014C00000000
IST1108I TGPL22   00B400000000000A0A006071003C3C3C
IST1108I TGPL31   005200000000000000000204C003D3D3D
IST1108I TGPL32   00B400000000000A0A00409100808080
IST1108I LOWSWCH  002D00000000003CB400207100808080
IST1108I MEDSWCH  002D0000000000787800207100808080
IST1108I HIGHSWCH 002D0000000000B43C00207100808080
IST1108I LOWLEASE 002D0000000000507800017100808080
IST1108I MEDLEASE 002D0000000000645000017100808080
IST1108I HIGHLEAS 002D0000000000782800017100808080
IST1108I TRINGLOW 007500000000000A1400014C00808080
IST1108I TRINGHI  008500000000000A1400014C00808080
IST1108I CHANNEL  002D0000000000050500604C00808080
IST1108I CHANESCA 002D0000000000050A00604C00808080
IST1108I TGPTESTA 00140000000000FF0000804C00818181
IST1108I TGPTESTB 004A0000000000640000014C003D3D3D
IST1108I TGPTESTC 005200000000000A0000204C003D3D3D
IST1108I TGPLOW   00140000000000FFC800804C00818181
IST1108I TGPMED   004A0000000000006400014C003D3D3D
IST1454I 26 TGP(S) DISPLAYED
IST314I END
```

Displaying transmission group profiles, limiting output to three resources:

```
d net,tgps,max=3
IST097I DISPLAY ACCEPTED
IST350I DISPLAY TYPE = TGPS
IST1107I TGP NAME TG CHARACTERISTICS
IST1108I PROFILE1 002D0000000000082000014C00808080
IST1108I PROFILE2 003C000000000000000017100808080
IST1108I PROFILE3 002D000000000000000019100808080
IST1315I DISPLAY TRUNCATED AT MAX = 3
IST1454I 3 TGP(S) DISPLAYED
IST314I END
```

DISPLAY TNSTAT command

```
►►──DISPLAY NET,TNSTAT──────────────────────────────────────────────►◄
```

Abbreviations

Operand	Abbreviation
DISPLAY	D

Purpose

The DISPLAY TNSTAT (tuning statistics) command is used to determine:

- The global setting for collecting tuning statistics
- Whether tuning statistics data is directed to the system console
- The time interval between tuning statistics summaries
- Whether TRLE controlled devices are collecting statistics and if so, the TRLE names
- Whether devices subsequently activated will collect tuning statistics

Resulting display

The resulting display shows:

- The global tuning statistics, console, and time interval settings
- TRLE devices that are currently collecting tuning statistics (ACTIVE)

Examples

Displaying TNSTAT information:

```
d net,tnstat
IST097I DISPLAY ACCEPTED
IST350I DISPLAY TYPE = TNSTAT
IST1450I GLOBAL TNSTAT = INACTIVE CNSL = NO TIME = 60
IST1451I TRLE = TRLE1A   TNSTAT = ACTIVE
IST1451I TRLE = IUTL0D00 TNSTAT = ACTIVE
IST314I END
```

DISPLAY TOPO command

Display a summary of the topology database:

```
►►──DISPLAY NET,TOPO──┬──────────────────┬──────────────────────────────────►◄
                      └─,LIST=SUMMARY────┘
```

Display a specific node:

```
►►──DISPLAY NET,TOPO──,ID=cp_name──┬──────────────────────┬──┬──────────────┬──►◄
                                   └─,APPNCOS=cos_name────┘  └─,LIST=ALL────┘
```

Display adjacent nodes:

```
►►──DISPLAY NET,TOPO──,ID=cp_name──,LIST=ADJ──┬──────────────────────┬──────►◄
                                              └─,APPNCOS=cos_name────┘
```

Display nodes of a specific type:

```
►►──DISPLAY NET,TOPO──,LIST=──┬─BN──────────┬──┬──────────────────────┬──────►
                              ├─CDSERVR─────┤  └─,APPNCOS=cos_name────┘
                              ├─EN──────────┤
                              ├─ICN─────────┤
                              ├─NN──────────┤
                              └─VN──────────┘

►──┬──────────────────┬──────────────────────────────────────────────────►◄
   │ ,ID=*.*          │
   │                (1)│
   └─,ID=──┬─name─────┬┘
           └─*────────┘
```

Notes:

1 Depending on the value of the DSPLYWLD start option, wildcard values can be used for this operand.

Display all nodes with a specific locsize:

```
►►──DISPLAY NET,TOPO──,LIST=──┬─EN─┬──,LOCSIZE=──┬─*──────────┬──────────────►◄
                              └─NN─┘              └─locate_size┘
```

Display TDU statistics information:

```
►►──DISPLAY NET,TOPO──,LIST=TDUINFO──┬──────────────────────┬──────────────►
                                     │ ,SCOPE=ACTIVITY      │
                                     └─,SCOPE=──┬─RECENT───┬┘
                                                └─ACTIVITY─┘
```

```
►─┬─,NUM=10──────────────────────┬─┬─,CLEAR=NO──────────┬─────────────────────────►◄
  │                              │ │                    │
  └─,NUM=──number_of_entries─────┘ └─,CLEAR=─┬─YES─┬────┘
                                             └─NO──┘
```

Display a specific TG or TGs:

```
►►─DISPLAY NET,TOPO──,ORIG=cp_name──,DEST=cp_name──┬──────────────────────────►
                                                   └─,TGN=tg_number──┘

►─,TGN=tg_number──┬──────────────────────────┬──────────────────────────────────►◄
                  └─,APPNCOS=cos_name────────┘
```

Abbreviations

Operand	Abbreviation
CLEAR=YES	CLEAR
DISPLAY	D
SCOPE=ACTIVITY	ACTIVITY
SCOPR=RECENT	RECENT

Purpose

The DISPLAY TOPO (topology) command displays information about the topology of an APPN network.

This command is valid in all APPN-capable hosts. However, since end nodes and migration data hosts do not receive topology updates (TDU) from other nodes, only local topology resources and brief information about adjacent nodes can be displayed at end nodes. For example, you can display detailed information about the local end node and the TGs originated at that end nodes. The end node's topology database does not have information about any TGs originated at an adjacent node to the end node itself. End nodes know the following information about an adjacent node:

- Network-qualified CP name
- Node type (network node, end node or virtual node)
- Status of the CP-CP sessions between the local end node and the adjacent node

This command displays only the information that is found in the topology database. Some resources might not be displayed in a network node or an interchange node for the following reasons:

- No CP-CP session path exists between the resource and the node from which this command is issued.
- Information about end nodes and the resources they own is not broadcast to the network.
- Information between two nonnative nodes is limited to keep them from being used as intermediate nodes.

When you display transmission group (TG) information, the order in which you specify the origin and destination can make a difference. ORIG=A,DEST=B does not necessarily display the same results as ORIG=B,DEST=A.

The following examples illustrate how this command works.

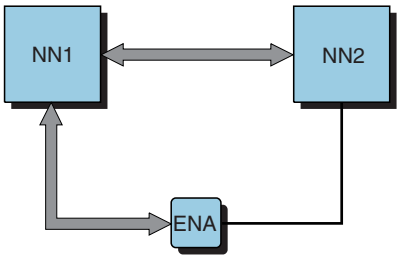

Figure 3. DISPLAY TOPO topology example 1

In Figure 3, end node A (ENA) has a CP-CP session with network node 1 (NN1) and an active link to network node 2 (NN2). Also, a CP-CP session exists between NN1 and NN2. The command:

```
D NET,TOPO,ORIG=NN2,DEST=ENA
```

issued from NN2 displays the requested TG information. However, the command:

```
D NET,TOPO,ORIG=ENA,DEST=NN2
```

issued from NN2 causes an error message, RESOURCE NOT FOUND. Because ENA is an end node, its TGs are not broadcast to the network, so NN2 does not know that ENA has a TG from ENA to NN2.

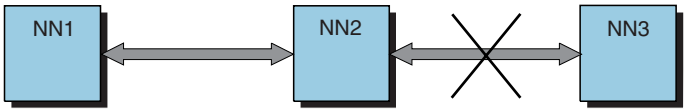

Figure 4. DISPLAY TOPO topology example 2

In Figure 4, CP-CP sessions exist between NN1 and NN2 and between NN2 and NN3. Suppose the link between NN2 and NN3 goes down. The command:

```
D NET,TOPO,ORIG=NN2,DEST=NN3
```

issued from NN1 indicates that the TG is inactive, but the command:

```
D NET,TOPO,ORIG=NN3,DEST=NN2
```

issued from NN1 indicates that the TG is still active. This is because the link between NN2 and NN3 appears to VTAM's topology component to be two one-way TGs, and there is no CP-CP session path available to NN1 so that NN3 can report that the TG from NN3 to NN2 is inactive.

Operands

APPNCOS=cos_name
Specifies the Class of Service to be used to calculate the node weight or the TG weight.

CLEAR
Specifies whether the TDU statistics counters in the topology database are to

be reset after the current display operation. This allows users to control the time interval in which TDU statistics data is to be collected between two D NET,TOPO,LIST=TDUINFO commands.

CLEAR=NO
TDU statistics counters will not be reset.

CLEAR=YES
All TDU statistics counters will be reset.

DEST=cp_name
Specifies the destination node (a control point) for a transmission group (TG).

ID Specifies the name of the resource to display.

ID=cp_name
Specifies the name of a control point to display.

ID=name
Specifies the name of a resource to display when used with the following operands:
- LIST=BN
- LIST=CDSERVR
- LIST=EN
- LIST=ICN
- LIST=NN
- LIST=VN

Depending on the value of the DSPLYWLD start option, wildcard values can be used for this operand. For more information about using wildcards, see “Using wildcard names” on page 11.

ID=*
Specifies that all resources are to be displayed.

LIST
Specifies the type of information to be displayed.

LIST=ADJ
Displays information about nodes that are adjacent to the node specified on the ID operand. (For the purpose of this command, a node is considered to be adjacent if it is attached by an active transmission group.)

LIST=ALL
Displays detailed information about the node specified on the ID operand. If you omit LIST=ALL, VTAM displays brief information about the node.

LIST=BN
Displays information about the border nodes specified on the ID operand. If you omit the ID operand, information about all border nodes is displayed. LIST=BN is not valid in end nodes or migration data hosts.

LIST=CDSERVR
Displays information about the central directory servers specified on the ID operand. If you omit the ID operand, information about all central directory servers is displayed. LIST=CDSERVR is not valid in end nodes or migration data hosts.

LIST=EN
Displays information about the end nodes specified on the ID operand, including migration data hosts (MDH). If you omit the ID operand, information about all end nodes is displayed.

LIST=ICN
Displays information about the interchange nodes specified on the ID operand. If you omit the ID operand, information about all interchange nodes is displayed. LIST=ICN is not valid in end nodes or migration data hosts.

LIST=NN
Displays information about the network nodes specified on the ID operand, including interchange nodes (ICN). If you omit the ID operand, information about all network nodes is displayed.

LIST=SUMMARY
Displays a summary, including how many nodes of each type are in the database. LIST=SUMMARY is the default.

LIST=TDUINFO
Display information about the Topology Updates (TDUs) received by this node. Since end nodes or migration data hosts never receive TDUs from other nodes, TDUINFO is not valid in end nodes or migration data hosts.

LIST=VN
Displays information about the virtual nodes specified on the ID operand. If you omit the ID operand, information about all virtual nodes is displayed.

LOCSIZE=locate_size
Specifies that only nodes which support the specified LOCATE message size are displayed.

If you specify the LOCSIZE operand, you must specify either LIST=EN or LIST=NN.

The LOCATE message size supported by a node is one of the node's resource characteristics distributed to other nodes by TDU broadcasts. Since end nodes and migration data hosts do not receive TDUs from other nodes, this parameter is only valid in network nodes and interchange nodes.

Table 2. LOCSIZE values

Value	Description
1K	Display all network nodes that support Locate message size of 1K.
1K+	Display all network nodes that support Locate message size of 1K and above.
2K	Display all network nodes that support Locate message size of 2K.
2K+	Display all network nodes that support Locate message size of 2K and above.
4K	Display all network nodes that support Locate message size of 4K.
4K+	Display all network nodes that support Locate message size of 4K and above.
8K	Display all network nodes that support Locate message size of 8K.
8K+	Display all network nodes that support Locate message size of 8K and above.
16K	Display all network nodes that support Locate message size of 16K.
16K+	Display all network nodes that support Locate message size of 16K and above.
32K	Display all network nodes that support Locate message size of 32K.
32K+	Display all network nodes that support Locate message size of 32K and above.

Table 2. LOCSIZE values (continued)

64K	Display all network nodes that support Locate message size of 64K.
64K+	Display all network nodes that support Locate message size of 64K and above.
128K	Display all network nodes that support Locate message size of 128K.

NUM
Specifies the number of TDU information entries to be displayed. The default value is 10 and the maximum value is 100.

When SCOPE=RECENT, it specifies the number of entries for the most recently received TDU to be displayed.

When SCOPE=ACTIVITY, it specifies the number of resource records to be displayed.

ORIG=cp_name
Specifies the origin node (a control point) for a transmission group (TG).

SCOPE
Specifies the type of TDU information to be displayed.

SCOPE=RECENT
Display the information about the most recently received TDUs.

SCOPE=ACTIVITY
Display information about topology resources that are received in TDUs most frequently.

TGN=tg_number
Specifies the transmission group number of the route to be displayed. The number must be an integer in the range 1–255.

Resulting display

The resulting display depends on the kind of information that was requested.

- For a summary of the topology, VTAM end node displays:
  - The number of adjacent nodes
  - The number of network nodes with a direct connection to this node
  - The number of end nodes with a direct connection to this node
  - The time and date of the last topology garbage collection
- For brief information for the local end node, VTAM end node displays:
  - The network-qualified name of the control point
  - The node type
  - The current weight of the node, if the Class of Service was specified
- For detailed information for the local end node, VTAM end node displays the short form plus the following:
  - An indication of whether the node is a migration data host
  - The resource sequence number
  - The number of days remaining until the node entry is removed from the topology database
  - An indication of the level of HPR support provided by the node
  - The LOCATE message size supported by the end node
  - All TGs owned by the end node
- For brief information for other specific nodes, VTAM end node displays:
  - The network-qualified name of the control point
  - The node type

  - The status of CP-CP sessions between the local end node and the node displayed
- For a summary of the topology, VTAM network node displays:
  - The time and date of the last database checkpoint
  - The time and date of the last topology garbage collection
  - The time and date of the checkpoint dataset recovered during VTAM initialization
  - The number of adjacent nodes
  - The number of network nodes
  - The number of end nodes with a direct APPN connection to this node
  - The number of end nodes served
  - The number of central directory servers
  - The number of interchange nodes
  - The number of border nodes
- For brief information for a specific node, VTAM network node displays:
  - The network-qualified name of the control point
  - The node type
  - The route addition resistance value
  - Whether the node is congested
  - The current weight of the node, if the Class of Service was specified
- For brief information for a specific node, VTAM end node displays:
  - The network-qualified name of the control point
  - The node type
- For detailed information for a specific node, VTAM network node displays the short form plus the following:
  - An indication of whether the node is a border node
  - An indication of whether the node is a central directory server
  - An indication of whether the node is an interchange node
  - The resource sequence number
  - The number of days remaining until the node entry is removed from the topology database
  - All TGs owned by the node
  - An indication of the level of HPR support provided by the node
  - The LOCATE message size supported by the node
  - The time and date when the last TDU about this node is received, and the name of the CP that sent the TDU
  - The time and date when TDU statistics counts on this resource were reset the last time
  - The number of TDUs about this resource sent
  - The number of TDUs about this resource received
  - The number of TDUs about this resource accepted
  - The number of TDUs about this resource rejected
  - The number of TDUs about this resource ignored
- For a display of adjacent nodes, VTAM displays the short form of node information for all nodes known to be adjacent to the node specified on the ID operand. If ID specifies the name of (a) the node from which you are issuing this command, or (b) a node immediately adjacent to the node from which you are issuing this command, the display indicates whether a CP-CP session exists between this node and the adjacent nodes. The existence of a CP-CP session is not displayed if there is one or more nodes between the node from which the command is issued and the node that is named on the ID operand.

  If ID specifies the name of the node from which you are issuing this command, it is possible for the display to indicate TDU congestion, which means that a large

number of topology update transactions are in progress on the CP-CP session with an adjacent node. This is a transient condition; the congestion should clear in a short time.

- For a display of one or more TGs, VTAM displays:
  - The network-qualified name of the origin control point
  - The network-qualified name of the destination control point
  - The TG number
  - The TG status
  - The TG type
  - An indication of CP-CP session support
  - The current weight of the TG, if a Class of Service was specified on the command. If the origin or destination of the TG is a virtual node, the weight of the TG is divided by two. This smaller weight value is shown in the display.
  - The resource sequence number
  - The number of days remaining until the TG is removed from the topology database
  - An indication of whether the TG is HPR-capable
  - The capacity (line speed) of the TG. The value displayed for capacity might not exactly match the value you coded for the resource. See the *z/OS Communications Server: SNA Resource Definition Reference* for information about how VTAM maps the defined value to the value it actually uses.
  - The propagation delay
  - The cost per unit time
  - The cost per byte
  - The security level of the TG
  - Three user-defined parameters (default is zero)
  - The name of the physical unit if the origin node of the TG is the local node
  - The time and date when the TDU statistics counts for the TG were reset
  - The time and date when the last TDU about this TG is received, and the name of the CP that sent the TDU
  - The number of TDUs about this resource sent
  - The number of TDUs about this resource received
  - The number of TDUs about this resource accepted
  - The number of TDUs about this resource rejected
  - The number of TDUs about this resource ignored
- For a display of a particular type of node, VTAM displays the short form of node information for each node in the topology database that matches the pattern specified on the ID operand and the type specified on the LIST operand (BN, CDSERVR, EN, ICN, NN, or VN).

Examples

Displaying a summary of the topology database at a network node:

```
d net,topo,list=summary
IST097I DISPLAY ACCEPTED
IST350I DISPLAY TYPE = TOPOLOGY
IST1306I LAST CHECKPOINT   ADJ  NN   EN   SERVED EN CDSERVR ICN  BN
IST1307I 10/23/00 12:32:30 2    3    0    0         0       2    2
IST1781I INITDB CHECKPOINT DATASET   LAST GARBAGE COLLECTION
IST1785I 10/21/00 08:00:20           10/23/00 10:19:27
IST314I END
```

DISPLAY TOPO

Displaying a summary of the topology database at an end node:

```
d net,topo,list=summary
IST097I DISPLAY ACCEPTED
IST350I DISPLAY TYPE = TOPOLOGY
IST1348I VTAM STARTED AS MIGRATION DATA HOST
IST1805I ONLY LOCAL TOPOLOGY INFORMATION IS AVAILABLE
IST1306I LAST CHECKPOINT   ADJ  NN   EN   SERVED EN CDSERVR ICN  BN
IST1307I ***NA***          1    2    1    *NA*      *NA*    *NA* *NA*
IST1781I INITDB CHECKPOINT DATASET   LAST GARBAGE COLLECTION
IST1785I ***NA***       NONE
IST314I END
```

Displaying brief information for a specific node:

```
d net,topo,id=a01n
IST097I DISPLAY ACCEPTED
IST350I DISPLAY TYPE = TOPOLOGY
IST1295I CP NAME           NODETYPE ROUTERES CONGESTION  CP-CP WEIGHT
IST1296I NETA.A01N         NN       1        NONE        YES   *NA*
IST314I END
```

Displaying brief information for a specific node, including its weight:

```
d net,topo,id=a01n,appncos=#connect
IST097I DISPLAY ACCEPTED
IST350I DISPLAY TYPE = TOPOLOGY
IST1295I CP NAME           NODETYPE ROUTERES CONGESTION  CP-CP WEIGHT
IST1296I NETA.A01N         NN       1        NONE        YES   115
IST314I END
```

Displaying detailed information for a specific node:

```
d net,topo,id=sscp2a,list=all
IST097I DISPLAY ACCEPTED
IST350I DISPLAY TYPE = TOPOLOGY
IST1295I CP NAME           NODETYPE ROUTERES CONGESTION  CP-CP WEIGHT
IST1296I NETA.SSCP2A       NN       1        NONE        YES   *NA*
IST1579I                   ----------------------------------------
IST1297I                   ICN/MDH  CDSERVR  RSN         HPR
IST1298I                   NO       NO       8           RTP
IST1579I                   ----------------------------------------
IST1223I                   BN       NATIVE   TIME LEFT   LOCATE SIZE
IST1224I                   NO       YES      12          16K
IST1769I LAST TDU RECEIVED - 12/21/00 08:59:52 FROM NETA.SSCP2A
IST1770I TDU COUNTS RESET - 12/21/00 08:30:45
IST1771I   SENT     - 3      RECEIVED - 3      ACCEPTED - 1
IST1772I   REJECTED - 0      IGNORED  - 2
IST1299I TRANSMISSION GROUPS ORIGINATING AT CP NETA.SSCP2A
IST1357I                                                CPCP
IST1300I DESTINATION CP    TGN      STATUS   TGTYPE      VALUE WEIGHT
IST1301I NETA.SSCP1A       255      OPER     INTERM VRTG YES   *NA*
IST314I END
```

Displaying nodes that are adjacent to the specified node:

```
d net,topo,id=a01n,list=adj,appncos=#connect
IST097I DISPLAY ACCEPTED
IST350I DISPLAY TYPE = TOPOLOGY
IST1295I CP NAME           NODETYPE ROUTERES CONGESTION  CP-CP WEIGHT
IST1296I NETA.A02N         NN       1        NONE        YES   65
IST1296I NETA.A500N        NN       1        NONE        YES   145
IST1296I IP.IP             GVRN     128      NONE        *NA*  *NA*
IST314I END
```

Displaying border nodes:

```
d net,topo,list=bn
IST097I DISPLAY ACCEPTED
IST350I DISPLAY TYPE = TOPOLOGY
IST1295I CP NAME           NODETYPE ROUTERES CONGESTION  CP-CP WEIGHT
IST1296I NETA.SSCP1A       NN       1        NONE        YES   *NA*
IST1296I NETB.SSCP7B       NN       128      NONE        NO    *NA*
IST314I END
```

Displaying central directory servers:

```
d net,topo,list=cdservr,appncos=#connect
IST097I DISPLAY ACCEPTED
IST350I DISPLAY TYPE = TOPOLOGY
IST1295I CP NAME           NODETYPE ROUTERES CONGESTION  CP-CP WEIGHT
IST1296I NETA.A500N        NN       1        NONE        YES   5
IST314I END
```

Displaying end nodes whose names begin with “CM2” and end with “A”:

```
d net,topo,list=en,id=cm2*a
IST097I DISPLAY ACCEPTED
IST350I DISPLAY TYPE = TOPOLOGY
IST1295I CP NAME           NODETYPE ROUTERES CONGESTION  CP-CP WEIGHT
IST1296I NETA.CM2AA        EN       *NA*     *NA*        YES   *NA*
IST1296I NETA.CM2BA        EN       *NA*     *NA*        YES   *NA*
IST1296I NETA.CM2CDA       EN       *NA*     *NA*        NO    *NA*
IST314I END
```

Displaying interchange nodes:

```
d net,topo,list=icn
IST097I DISPLAY ACCEPTED
IST350I DISPLAY TYPE = TOPOLOGY
IST1295I CP NAME           NODETYPE ROUTERES CONGESTION  CP-CP WEIGHT
IST1296I NETA.A500N        NN       1        NONE        YES   *NA*
IST1296I NETA.A02N         NN       1        NONE        *NA*  *NA*
IST1296I NETA.A01N         NN       1        NONE        NO    *NA*
IST314I END
```

Displaying network nodes:

```
d net,topo,list=nn
IST097I DISPLAY ACCEPTED
IST350I DISPLAY TYPE = TOPOLOGY
IST1295I CP NAME           NODETYPE ROUTERES CONGESTION  CP-CP WEIGHT
IST1296I NETA.SSCP1A       NN       1        NONE        *NA*  *NA*
IST1296I NETA.SSCP2A       NN       1        NONE        YES   *NA*
IST1296I NETA.SSCP7B       NN       128      NONE        NO    *NA*
IST314I END
```

Displaying virtual nodes:

```
d net,topo,list=vn
IST097I DISPLAY ACCEPTED
IST350I DISPLAY TYPE = TOPOLOGY
IST1295I CP NAME           NODETYPE ROUTERES CONGESTION  CP-CP WEIGHT
IST1296I NETA.VN1          VN       128      NONE        *NA*  *NA*
IST1296I IP.IP             GVRN     128      NONE        *NA*  *NA*
IST314I END
```

Displaying transmission group information at a network node:

```
d net,topo,orig=sscp1a,dest=sscp2a
IST097I DISPLAY ACCEPTED
IST350I DISPLAY TYPE = TOPOLOGY
IST1299I TRANSMISSION GROUPS ORIGINATING AT CP NETA.SSCP1A
IST1357I                                                CPCP
IST1300I DESTINATION CP    TGN      STATUS   TGTYPE      VALUE WEIGHT
```

```
IST1301I NETA.SSCP2A       21       OPER     INTERM      YES   *NA*
IST1579I                   ----------------------------------------
IST1163I                   RSN               HPR         TIME LEFT
IST1164I                   26                YES         12
IST1579I                   ----------------------------------------
IST1302I                   CAPACITY PDELAY   COSTTIME    COSTBYTE
IST1303I                   32M      TERRESTR 0           0
IST1579I                   ----------------------------------------
IST1304I                   SECURITY UPARM1   UPARM2      UPARM3
IST1305I                   UNSECURE 128      128         128
IST1579I                   ----------------------------------------
IST1736I                   PU NAME
IST1737I                   P1234567
IST1769I LAST TDU RECEIVED - 12/21/00 08:35:44 FROM NETA.SSCPCA
IST1770I TDU COUNTS RESET - 12/21/00 08:30:45
IST1771I   SENT     - 10     RECEIVED - 4      ACCEPTED - 0
IST1772I   REJECTED - 2      IGNORED  - 2
IST314I END
```

Displaying transmission group information for a specific Class of Service at a network node:

```
d net,topo,orig=sscpca,dest=sscpba,tgn=21,appncos=#connect
IST097I DISPLAY ACCEPTED
IST350I DISPLAY TYPE = TOPOLOGY
IST1299I TRANSMISSION GROUPS ORIGINATING AT CP NETA.SSCPCA
IST1357I                                                CPCP
IST1300I DESTINATION CP    TGN      STATUS   TGTYPE      VALUE WEIGHT
IST1301I NETA.SSCPBA       21       OPER     INTERM      YES   210
IST1579I                   ----------------------------------------
IST1163I                   RSN               HPR         TIME LEFT
IST1164I                   26                YES         12
IST1579I                   ----------------------------------------
IST1302I                   CAPACITY PDELAY   COSTTIME    COSTBYTE
IST1303I                   8K       TERRESTR 0           0
IST1579I                   ----------------------------------------
IST1304I                   SECURITY UPARM1   UPARM2      UPARM3
IST1305I                   UNSECURE 0        0           0
IST1769I LAST TDU RECEIVED - 12/21/00 08:35:44 FROM NETA.SSCPCA
IST1770I TDU COUNTS RESET - 12/21/00 08:30:45
IST1771I   SENT     - 10     RECEIVED - 4      ACCEPTED - 0
IST1772I   REJECTED - 2      IGNORED  - 2
IST314I END
```

Displaying information about virtual-route-based transmission groups at a network node:

```
d net,topo,orig=sscp2a,dest=sscp1a,tgn=255
IST097I DISPLAY ACCEPTED
IST350I DISPLAY TYPE = TOPOLOGY
IST1299I TRANSMISSION GROUPS ORIGINATING AT CP NETA.SSCP2A
IST1357I                                                CPCP
IST1300I DESTINATION CP    TGN      STATUS   TGTYPE      VALUE WEIGHT
IST1301I NETA.SSCP1A       255      OPER     INTERM VRTG YES   *NA*
IST1579I                   ----------------------------------------
IST1163I                   RSN               HPR         TIME LEFT
IST1164I                   26                YES         12
IST1579I                   ----------------------------------------
IST1302I                   CAPACITY PDELAY   COSTTIME    COSTBYTE
IST1303I                   8K       TERRESTR 0           0
IST1579I                   ----------------------------------------
IST1304I                   SECURITY UPARM1   UPARM2      UPARM3
IST1305I                   UNSECURE 128      128         128
IST1769I LAST TDU RECEIVED - 12/21/00 08:59:52 FROM NETA.SSCP2A
```

```
IST1770I TDU COUNTS RESET - 12/21/00 08:30:45
IST1771I   SENT     - 1      RECEIVED - 1      ACCEPTED - 1
IST1772I   REJECTED - 0      IGNORED  - 0
IST314I END
```

Displaying all network nodes or interchange nodes that support any LOCATE message size:

```
d net topo,list=nn,locsize=*
IST097I DISPLAY ACCEPTED
IST350I DISPLAY TYPE = TOPOLOGY
IST1701I CP NAME           LOCATE SIZE
IST1702I NETA.SSCP1A        16K
IST1702I NETA.SSCPBA         1K
IST1702I NETA.SSCP2A        16K
IST314I END
```

Displaying a list of network nodes or interchange nodes that support a specified LOCATE size with LIST=NN:

```
d net,topo,list=nn,locsize=16k
IST097I DISPLAY ACCEPTED
IST350I DISPLAY TYPE = TOPOLOGY
IST1701I CP NAME           LOCATE SIZE
IST1702I NETA.SSCP1A        16K
IST1702I NETA.SSCP2A        16K
IST314I END
```

Displaying a list of end nodes (known to this NN) or interchange nodes that support a specified LOCATE size:

```
d net,topo,list=en,locsize=1k
IST097I DISPLAY ACCEPTED
IST350I DISPLAY TYPE = TOPOLOGY
IST1701I CP NAME           LOCATE SIZE
IST1702I NETA.SSCP1A         1K
IST314I END
```

Displaying detailed information for the local end node:

```
d net,topo,id=sscpaa,list=all
IST097I DISPLAY ACCEPTED
IST350I DISPLAY TYPE = TOPOLOGY
IST1295I CP NAME           NODETYPE ROUTERES CONGESTION  CP-CP WEIGHT
IST1296I NETA.SSCPAA       EN       *NA*     ***NA***    *NA*  *NA*
IST1579I                   ----------------------------------------
IST1297I                   ICN/MDH  CDSERVR  RSN         HPR
IST1298I                   YES      *NA*     6           RTP
IST1579I                   ----------------------------------------
IST1223I                   BN       NATIVE   TIME LEFT   LOCATE SIZE
IST1224I                   *NA*     *NA*     15          16K
IST1299I TRANSMISSION GROUPS ORIGINATING AT CP NETA.SSCPAA
IST1357I                                                 CPCP
IST1300I DESTINATION CP    TGN      STATUS   TGTYPE      VALUE WEIGHT
IST1301I NETA.SSCPBA       21       INOP     ENDPT       YES   *NA*
IST1301I NETA.SSCP2A       21       INOP     ENDPT       YES   *NA*
IST1301I NETA.SSCP1A       21       OPER     ENDPT       YES   *NA*
IST314I END
```

Displaying a local TG originated at the local end node:

```
d net,topo,orig=sscpaa,dest=sscp1a
IST097I DISPLAY ACCEPTED
IST350I DISPLAY TYPE = TOPOLOGY
IST1299I TRANSMISSION GROUPS ORIGINATING AT CP NETA.SSCPAA
IST1357I                                                 CPCP
IST1300I DESTINATION CP    TGN      STATUS   TGTYPE      VALUE WEIGHT
IST1301I NETA.SSCP1A       21       OPER     ENDPT       YES   *NA*
```

```
IST1579I                  ----------------------------------------
IST1163I                  RSN               HPR         TIME LEFT
IST1164I                  14                YES         15
IST1579I                  ----------------------------------------
IST1302I                  CAPACITY PDELAY   COSTTIME    COSTBYTE
IST1303I                  32M      NEGLIGIB 0           0
IST1579I                  ----------------------------------------
IST1304I                  SECURITY UPARM1   UPARM2      UPARM3
IST1305I                  UNSECURE 128      128         128
IST1579I                  ----------------------------------------
IST1736I                  PU NAME
IST1737I                  AHHCPU1
IST314I END
```

Displaying brief information for a specific node adjacent to the local end node:

```
d net,topo,id=sscp1a
IST097I DISPLAY ACCEPTED
IST350I DISPLAY TYPE = TOPOLOGY
IST1295I CP NAME          NODETYPE ROUTERES CONGESTION  CP-CP WEIGHT
IST1296I NETA.SSCP1A      NN       *NA*     ***NA***    YES   *NA*
IST314I END
```

DISPLAY TRACES command

Display the status of BUF, GPT, IO, LINE, SIT, STATE, and TG traces:

```
►►──DISPLAY NET,TRACES──,TYPE=NODES──────────────────────────────────────►
►─,ID=──┬─*──────────────────────────────────────────────────────────────┬──►◄
        ├─(*)────────────────────────────────────────────────────────────┤
        │                        (1)  ┌─,IDTYPE=RESOURCE──────────┐      │
        └─┬─name──────────────────────┤                           │      │
          │          ┌──,──┐          └─,IDTYPE=──┬─CP──────────┬─┘      │
          └─(──────name──────)──┘                 ├─SSCP────────┤        │
                                                  └─RESOURCE────┘        │
```

Notes:

1 Depending on the value of the DSPLYWLD start option, wildcard values can be used for this operand.

Display the status of communication network management traces:

```
►►──DISPLAY NET,TRACES──,TYPE=CNM──────────────────────────────────────►◄
```

Display the status of the user Exit buffer trace:

```
►►──DISPLAY NET,TRACES──,TYPE=EXIT──,ID=──┬─ISTEXCAA──┬──────────────►◄
                                          ├─ISTEXCCS──┤
                                          └─ISTEXCDM──┘
```

Display the status of a module trace:

```
►►──DISPLAY NET,TRACES──,TYPE=MODULE──────────────────────────────────►◄
```

Display the status of a network controller line trace:

```
►►──DISPLAY NET,TRACES──,TYPE=NETCTLR──,ID=3710_pu_name──────────────►◄
```

Display the status of an SMS (buffer use) trace:

```
                                  ┌─,ID=VTAMBUF─┐
►►──DISPLAY NET,TRACES──,TYPE=SMS─┴─────────────┴──────────────────────►◄
```

Display the status of a resource state trace:

```
►►──DISPLAY NET,TRACES──,TYPE=STATE───────────────────────────────────►◄
```

Display the status of a TSO user trace:

DISPLAY TRACES

```
►►──DISPLAY NET,TRACES──,TYPE=TSO──,ID=──┬─*──────────────────────────┬──────────────►◄
                                         ├─(*)──────────────────────┤
                                         ├─user_id──────────(1)─────┤
                                         │      ┌──,──────────┐      │
                                         └──(───┴─user_id──────┴──)───┘
```

Notes:

1 Depending on the value of the DSPLYWLD start option, wildcard values can be used for this operand.

Display the status of the VTAM internal trace:

```
                          ┌─,TYPE=VTAM─┐
►►──DISPLAY NET,TRACES────┴────────────┴──────────────────────────────────────────►◄
```

Display the status of all active traces:

```
►►──DISPLAY NET,TRACES──,TYPE=ALL──────────────────────────────────────────────►◄
```

Abbreviations

Operand	Abbreviation
DISPLAY	D
TRACES	TRACE
TYPE=NODES	TYPE=NODE

Purpose

The DISPLAY TRACES command displays the status of a trace.

Operands

ID Specifies a value that varies depending on the type of trace.

- For **TYPE=NODES**, ID specifies the name of one or more resources whose trace status is to be displayed. The ID operand is required with TYPE=NODES. You can specify major or minor node names. Resource names can be network-qualified.

  Depending on the value of the DSPLYWLD start option, wildcard values can be used for this operand. However, if you specify a wildcard, trace status information is displayed only for resources that match the wildcard value, and not for subordinate resources. For more information about using wildcards, see “Using wildcard names” on page 11.

  Attention: Specifying a wildcard name might degrade performance because VTAM checks every major or minor node in the network.

  Note: If model application program definition names match the pattern you specify on the ID operand of the DISPLAY TRACES command when TYPE specifies NODES, those model application program names will

appear in your display output. In addition, any dynamic application programs built from those model application program definitions will also appear in your display output.

A model application program will be identified in message IST1041I as MODEL APPL. A dynamic application program will be identified in message IST1041I as DYNAMIC APPL.

For example, if you issue the following command:

```
DISPLAY NET,TRACES,ID=APPL*,TYPE=NODES
```

and model application programs have been defined using names that match the pattern specified on the ID operand (APPL*), you will get the following output:

```
IST097I DISPLAY ACCEPTED
IST350I DISPLAY TYPE = TRACES,TYPE=NODES
IST075I NAME = APPL1A, TYPE = APPL SEGMENT
IST1041I NETA.APPL1        APPL
IST1042I   BUF      = ON    - AMOUNT = PARTIAL - SAVED = NO
IST1041I NETA.APPL1V       APPL
IST1042I   IO       = ON    - AMOUNT = **NA**  - SAVED = NO
IST924I -------------------------------------------------------
IST075I NAME = TESTAPPL, TYPE = APPL SEGMENT
IST1041I NETA.APPL1*       MODEL APPL
IST1042I   BUF      = ON    - AMOUNT = PARTIAL - SAVED = NO
IST1041I NETA.APPL1Q       DYNAMIC APPL
IST1042I   BUF      = ON    - AMOUNT = PARTIAL - SAVED = NO
IST314I END
```

The wildcard character used in APPL* on the ID operand of the DISPLAY TRACES command tells VTAM to display the trace status of any resource whose name begins with APPL, followed by zero to four valid characters in length. The name field of the network-qualified name NETA.APPL1*, even though it contains a wildcard character, begins with APPL, followed by zero to four valid characters in length (* and ? are valid characters in an application program minor node name). Therefore, it is included in the display output, as is the dynamic application program (NETA.APPL1Q) built from APPL1*.

See the “MODIFY TRACE command” on page 396 for information about which trace types are applicable to various VTAM resource types.

- For **TYPE=CNM**, the ID operand is not valid.
- For **TYPE=EXIT**, ID=ISTEXCAA, ISTEXCCS and ISTEXCDM are the only valid values for the ID operand. ID = must be specified.
- For **TYPE=MODULE**, the ID operand is not valid.
- For **TYPE=NETCTLR**, ID specifies the name of the 3710 physical unit that is to perform the trace. The ID operand is required and wildcard names are not valid for TYPE=NETCTLR.
- For **TYPE=SMS**, ID=VTAMBUF is the only valid value for the ID operand. ID=VTAMBUF can be specified or assumed by default.
- For **TYPE=STATE**, the ID operand is not valid.
- For **TYPE=TSO**, ID specifies the user IDs for which trace status is to be displayed. The ID operand is required with TYPE=TSO. User IDs that do not have an active TSO trace are not displayed. Network-qualified names are not allowed with TYPE=TSO.

Depending on the value of the DSPLYWLD start option, wildcard values can be used for this operand. For more information about using wildcards, see "Using wildcard names" on page 11.

Attention: Specifying a wildcard name might degrade performance because VTAM checks every TSO user ID in the network.

- For **TYPE=VTAM**, the ID operand is not valid.
- For **TYPE=ALL**, the ID operand is not valid.

IDTYPE

Specifies the type of resource that the ID operand names. If several types of resources share the same name, IDTYPE identifies which resource the command should act on. The IDTYPE operand is valid only when TYPE=NODES is specified and the ID operand specifies a value other than an asterisk (*).

IDTYPE=CP

Displays information for the CP with the name specified on the ID operand. The control point that is displayed can be the host CP or a CDRSC representing an adjacent CP.

IDTYPE=RESOURCE

Displays information for a CP, an SSCP, or another resource with the name specified on the ID operand. If both an SSCP and a CP are found, VTAM displays information for both of them.

IDTYPE=SSCP

Displays information for the SSCP with the name specified on the ID operand.

TYPE

If TYPE is not specified, TYPE=VTAM is used by default.

TYPE=CNM

Displays information about communication network management (CNM) traces.

TYPE=EXIT

Displays information about the session management exit (SME) buffer trace.

TYPE=MODULE

Displays information about a module trace.

TYPE=NODES

Displays information about BUF, GPT, IO, LINE, SIT, STATE, and TG traces for the resources named on the ID operand.

BUF Buffer contents trace
GPT Generalized PIU trace
IO Input/output trace
LINE NCP line trace
SIT Scanner interface trace
STATE Resource state trace
TG Transmission group trace

TYPE=NETCTLR

Displays information about a 3710 Network Controller line trace.

TYPE=SMS

Displays information about the storage management services (SMS) buffer use trace.

TYPE=STATE
Displays information about the resource types being traced.

TYPE=TSO
Displays trace information for the TSO user IDs specified on the ID operand. This function is similar to that provided by the “DISPLAY TSOUSER command” on page 259.

TYPE=VTAM
Displays information about the VTAM internal trace (VIT).

TYPE=ALL
Displays information for the following types of traces, if they are active:
- TYPE=CNM
- TYPE=EXIT
- TYPE=MODULE
- TYPE=NODES,ID=*
- TYPE=SMS
- TYPE=STATE
- TYPE=TSO,ID=*
- TYPE=VTAM

No information is displayed for the CNM, TSO, EXIT, MODULE, SMS, STATE, and VTAM traces if they are not active.

Note: Specifying TYPE=ALL might degrade performance because VTAM checks every major or minor node in the network. It may also temporarily delay subsequent VTAM operator commands.

Resulting display

The resulting display shows information specific to the trace type and ID specified.

- For TYPE=CNM, the resulting display shows the status for session awareness and problem determination PIU buffer traces (on or off).
- For TYPE=EXIT, the resulting display shows the functions of the session management exit (SME) for which tracing is active.
- For TYPE=MODULE, the resulting display shows the types of modules for which tracing is active.
- For TYPE=NODES, the resulting display shows:
  - For ID=*major node name*, the resources subordinate to the named resource that have an active BUF, GPT, IO, LINE, SIT, STATE, or TG trace.
  - For ID=*minor node name*, the status of BUF, GPT, IO, LINE, SIT, STATE, or TG tracing for this resource.
  - For ID=*, all resources that have an active BUF, GPT, IO, LINE, SIT, STATE, or TG trace, along with the name of the resource’s major node.
  - For ID=*wildcard name*, the status of BUF, GPT, IO, LINE, SIT, STATE, or TG tracing for the resources that match the wildcard value.

  Note: For ID=*name* in any form, the display also shows whether BUF, IO, and STATE trace requests are saved, with saved trace requests for unknown resources.
- For TYPE=NETCTLR, the resulting display shows the name of the 3710 performing the trace, and the PU name and line name of each resource being traced.
- For TYPE=SMS, the resulting display shows the trace status (on or off).

- For TYPE=STATE, the resulting display shows the resource types for which resource state tracing is active.
- For TYPE=TSO, the resulting display shows:
  - For ID=*name*, the trace status for the named user ID (on or off).
  - For ID=*, all user IDs that have an active trace.
- For TYPE=VTAM, the resulting display shows the mode (internal or both internal and external), the trace table size (applicable only to MODE=INT), and the **user-specified** trace options that are currently in effect. The default trace options are active, but are not displayed unless you explicitly specified them on the TRACE,TYPE=VTAM start option or the MODIFY TRACE command.
- For TYPE=ALL, the resulting display shows all of the information for the following traces, if they are active:
  - TYPE=CNM
  - TYPE=EXIT
  - TYPE=MODULE
  - TYPE=NODES,ID=*
  - TYPE=SMS
  - TYPE=STATE
  - TYPE=TSO,ID=*
  - TYPE=VTAM

Examples

Displaying the status of communication network management (CNM) traces:

```
d net,traces,type=cnm
IST097I DISPLAY ACCEPTED
IST350I DISPLAY TYPE = TRACES,TYPE=CNM
IST655I PDPIUBUF TRACE STATUS = ON
IST655I SAWBUF TRACE STATUS = ON
IST314I END
```

Displaying the status of the session management exit (SME) buffer trace:

```
d net,traces,type=exit,id=istexcaa
IST097I DISPLAY ACCEPTED
IST075I NAME = ISTEXCAA, TYPE = EXIT
IST199I OPTIONS = BEGIN INITAUTH SECAUTH ACCTING GWPATH XRF ADJSSCP
IST199I OPTIONS = ALIAS ALS REPL VRSEL HPRVRSEL HPRP_OLU HPRP_ANR
IST199I OPTIONS = HPRP_DLU END
IST314I END
```

Displaying the status for the exit trace for ISTEXCCS:

```
d net,traces,type=exit,id=istexccs
IST097I DISPLAY ACCEPTED
IST075I NAME = ISTEXCCS, TYPE = EXIT
IST199I OPTIONS = BEGIN CONNSTAT DYNA_XID PRED_XID END
IST314I END
```

Displaying the status of the module trace:

```
d net,traces,type=module
IST097I DISPLAY ACCEPTED
IST350I DISPLAY TYPE = TRACES,TYPE=MODULE
IST199I OPTIONS = COMMAND CONNECTION INTERFACES SESSION
IST314I END
```

Displaying node traces for a few resources with saved trace requests:

```
d net,traces,type=nodes,id=(appl1,appl2,netappl1,noapp1)
IST097I DISPLAY ACCEPTED
IST350I DISPLAY TYPE = TRACES,TYPE=NODES
IST075I NAME = APPL1A, TYPE = APPL SEGMENT
```

```
IST1041I NETA.APPL1        APPL
IST1042I   BUF      = ON    - AMOUNT = PARTIAL  - SAVED = YES
IST1042I   STATE    = ON    - AMOUNT = **NA**   - SAVED = YES
IST1041I NETA.APPL2        APPL
IST1042I   BUF      = ON    - AMOUNT = PARTIAL  - SAVED = NO
IST1042I   STATE    = ON    - AMOUNT = **NA**   - SAVED = NO
IST924I -------------------------------------------------------------
IST075I NAME = CDRSC1A, TYPE = CDRSC SEGMENT
IST1041I NETA.NETAPPL1     CDRSC
IST1042I   IO       = ON    - AMOUNT = **NA**   - SAVED = YES
IST1042I   STATE    = ON    - AMOUNT = **NA**   - SAVED = YES
IST924I -------------------------------------------------------------
IST1422I SAVED TRACE REQUESTS FOR NETA.NOAPP1
IST1041I NETA.NOAPP1       N/A
IST1042I   BUF      = SAVED - AMOUNT = PARTIAL
IST1042I   STATE    = SAVED - AMOUNT = **NA**
IST314I END
```

Displaying node traces for all resources:

```
d net,traces,type=nodes,id=*
IST097I DISPLAY ACCEPTED
IST350I DISPLAY TYPE = TRACES,TYPE=NODES 506
IST075I NAME = A50CDRMC, TYPE = CDRM SEGMENT
IST1041I C01N              CDRM
IST1042I   BUF      = ON    - AMOUNT = PARTIAL  - SAVED = NO
IST924I -------------------------------------------------------------
IST075I NAME = A0362ZC, TYPE = PU T4/5
IST1041I A03S16            LINE
IST1042I   LINE     = TRACT
IST314I END
```

Displaying node traces for a control point:

```
d net,traces,type=nodes,id=a500n,idtype=cp
IST097I DISPLAY ACCEPTED
IST350I DISPLAY TYPE = TRACES,TYPE=NODES
IST075I NAME = NETA.A500N, TYPE = APPL
IST1041I NETA.A500N        APPL
IST1042I   BUF      = ON    - AMOUNT = PARTIAL  - SAVED = NO
IST314I END
```

Displaying node traces for an SSCP:

```
d net,traces,type=nodes,id=a500n,idtype=sscp
IST097I DISPLAY ACCEPTED
IST350I DISPLAY TYPE = TRACES,TYPE=NODES
IST075I NAME = A500N, TYPE = CDRM
IST1041I A500N             CDRM
IST1042I   BUF      = ON    - AMOUNT = PARTIAL  - SAVED = NO
IST314I END
```

Displaying the status of the SMS trace:

```
d net,traces,type=sms
IST097I DISPLAY ACCEPTED
IST350I DISPLAY TYPE = TRACES,TYPE=SMS
IST655I SMS TRACE STATUS = OFF
IST314I END
```

Displaying the status of the resource state trace:

```
d net,traces,type=state
IST097I DISPLAY ACCEPTED
IST350I DISPLAY TYPE = TRACES,TYPE=STATE
IST199I OPTIONS = ADJCP APPL CDRM CDRSC GROUP LINE LU NCP PU
IST314I END
```

Displaying a TSO user trace:

```
d net,traces,type=tso,id=user1
IST097I DISPLAY ACCEPTED
IST350I DISPLAY TYPE = TRACES,TYPE=TSO
IST1200I USER1     TSO USERID   TRACE = OFF
IST314I END
```

Displaying the status of the VTAM internal trace:

```
d net,traces,type=vtam
IST097I DISPLAY ACCEPTED
IST350I DISPLAY TYPE = TRACES,TYPE=VTAM
IST315I VTAM INTERNAL TRACE ACTIVE - MODE = INT, SIZE = 100 PAGES
IST199I OPTIONS = API APPC CFS CIO CMIP CSM ESC HPR LCS LOCK MSG NRM
IST199I OPTIONS = PIU PSS SMS SSCP TCP VCNS XBUF XCF
IST1730I SUBTRACE TREE ACTIVE UNDER TRACE OPTION SSCP
IST1730I SUBTRACE ARBP ACTIVE UNDER TRACE OPTION SSCP
IST314I END
```

Displaying all active traces:

```
d net,traces,type=all
IST097I DISPLAY ACCEPTED
IST350I DISPLAY TYPE = TRACES,TYPE=NODES 549
IST075I NAME = A50CDRMC, TYPE = CDRM SEGMENT
IST1041I C01N              CDRM
IST1042I   BUF      = ON    - AMOUNT = PARTIAL
IST924I -------------------------------------------------------------
IST075I NAME = A0362ZC, TYPE = PU T4/5
IST1041I A03S16            LINE
IST1042I   LINE     = TRACT
IST924I -------------------------------------------------------------
IST075I NAME = ISTEXCAA, TYPE = EXIT
IST199I OPTIONS = BEGIN INITAUTH VRSEL END
IST924I -------------------------------------------------------
IST075I NAME = ISTEXCCS, TYPE = EXIT
IST199I OPTIONS = BEGIN CONNSTAT DYNA_XID PRED_XID END
IST924I -------------------------------------------------------------
IST350I DISPLAY TYPE = TRACES,TYPE=VTAM
IST315I VTAM INTERNAL TRACE ACTIVE - MODE = INT, SIZE = 050
IST199I OPTIONS = API APPC CFS CIO CMIP CSM ESC HPR LCS LOCK MSG NRM
IST199I OPTIONS = PIU PSS SMS SSCP TCP VCNS XBUF XCF
IST315I VTAM INTERNAL TRACE ACTIVE - MODE = EXT, SIZE = 002
IST199I OPTIONS = API APPC CFS CIO CMIP CSM ESC HPR LCS LOCK MSG NRM
IST199I OPTIONS = PIU PSS SMS SSCP TCP VCNS XBUF XCF
IST924I -------------------------------------------------------------
IST350I DISPLAY TYPE = TRACES,TYPE=STATE
IST199I OPTIONS = ADJCP APPL CDRM CDRSC GROUP LINE LU NCP PU
IST924I -------------------------------------------------------------
IST350I DISPLAY TYPE = TRACES,TYPE=MODULE
IST199I OPTIONS = COMMAND CONNECTION INTERFACES SESSION
IST314I END
```

DISPLAY TRL command

Display the entries in the TRL major node:

```
                          ┌─,CONTROL=ALL──────────────────────┐
►►─DISPLAY NET,TRL─────────┼──────────────────────────────────┼──────────►
                          └─,CONTROL=─┬─ALL──────────────────┤
                                      ├─MPC──────────────────┤
                                      ├─TCP─┬──────────────┬─┤
                                      │     └─,ULPID=name──┘ │
                                      └─XCF────────────────┘

   ┌─,MAX=DSPLYDEF_start_option_value─┐
►──┼──────────────────────────────────┼──────────────────────────────►◄
   └─,MAX=──┬─*──────────────────────┬─┘
            └─number_of_resources────┘
```

Display information about a specific user-defined TRLE:

```
►►─DISPLAY NET,TRL──,TRLE=trl_entry_name──────────────────────────►◄
```

Display information about a dynamic XCF TRLE:

```
►►─DISPLAY NET,TRL──,XCFCP=cp_name────────────────────────────────►◄
```

Abbreviations

Operand	Abbreviation
DISPLAY	D

Purpose

The DISPLAY TRL (transport resource list) command provides information about the TRL major node or about a single TRLE (transport resource list entry). TRLEs define the connectivity characteristics of PUs that provide APPN host-to-host channel connection.

Operands

CONTROL
Specifies the type of connections to display.

CONTROL=ALL
Specifies that information is to be displayed about all TRLEs.

CONTROL=MPC
Specifies that information is to be displayed about user-defined TRLEs only.

CONTROL=TCP
Specifies that information is to be displayed about dynamic TCP/IP TRLEs only.

CONTROL=XCF
Specifies that information is to be displayed about dynamic XCF TRLEs only.

MAX
Specifies the maximum number of TRLEs that VTAM displays for this command.

If you specify the MAX operand, do not specify TRLE.

MAX=*
Specifies that the value of the DSPLYMAX start option is used to limit the display output.

MAX=number_of_resources
Specifies the number of TRLEs to display for this command. The valid range is 1–value of DSPLYMAX. The default is the value specified for the DSPLYDEF start option.

Specifying MAX limits the display output. VTAM searches only for the number of instances that you have specified. When that number is found, VTAM does not search any further. This saves processing time for the command and gives you control over the amount of display output generated by the command. If fewer TRLEs are found than you have specified on MAX, VTAM displays only the TRLEs that are found.

TRLE=trl_entry_name
Specifies the name of the TRLE to be displayed.

ULPID=name
Specifies the name of a CS z/OS upper-layer protocol (ULP) to be displayed, for example, the TCP/IP procedure name. The ULPID operand is only valid with CONTROL=TCP.

XCFCP=cp_name
Specifies that information is to be displayed about the TRLE representing the connection to another VTAM in the XCF group. *cp_name* is the CP name of the other VTAM.

Resulting display

The resulting display shows:

- The name and status of all TRLEs in the TRL major node if the TRLE operand is not specified. The IUTSAMEH TRLE will be displayed as the initial TRLE in the TRL.
- The name and status of the TRLE specified on the TRLE operand. If the status is active, the display also includes the address and operational status of the READ, WRITE, and (OSA-Express only) DATA subchannels. In addition, the following information may be displayed:
  - MPC level and usage (MPC header size, maximum MPC data size, inbound data storage medium)
  - Name of the CS z/OS upper-layer protocols (ULPs) using this TRLE
  - OSA portname, OSA adapter number, and OSA microcode level
  - I/O trace status
  - The capability of the connection to perform channel I/O directly to or from communications storage manager (CSM) buffers.
- For a dynamic TCP TRLE, or an exclusively owned TRLE, only one message with a ULP ID will be issued, since there can only be one ULP using each of these TRLEs. For an OSA-Express Adapter, one message with a ULP ID will be issued for each datapath channel address used by a ULP. For other TRLEs, more than one ULP ID message may be issued, depending on how many ULPs are using the TRLE.

- The ULP ID will be the jobname for TCP/IP ULPs, the SNA PU name for ANNC ULPs, and the XCA Major Node name for ATM or EE ULPs.

Examples

Displaying all TRL entries:

```
d net,trl
IST097I DISPLAY ACCEPTED
IST350I DISPLAY TYPE = TRL
IST1314I TRLE = IUTSAMEH  STATUS = ACTIV----E  CONTROL = MPC
IST1314I TRLE = ML1A2A1   STATUS = NEVAC       CONTROL = MPC
IST1314I TRLE = ML1A2A2   STATUS = NEVAC       CONTROL = MPC
IST1314I TRLE = ML1A2A3   STATUS = NEVAC       CONTROL = MPC
IST1314I TRLE = ML1A2A4   STATUS = NEVAC       CONTROL = MPC
IST1314I TRLE = ISTT0001  STATUS = ACTIV----E  CONTROL = XCF
IST1454I 6 TRLE(S) DISPLAYED
IST314I END
```

Displaying an active TRL entry:

```
d net,trl,trle=trle1a
IST097I DISPLAY ACCEPTED
IST075I NAME = TOC01N, TYPE = TRLE 701
IST486I STATUS= ACTIV, DESIRED STATE= ACTIV
IST087I TYPE = LEASED             , CONTROL = MPC , HPDT = YES
IST1715I MPCLEVEL = HPDT       MPCUSAGE = SHARE
IST1717I ULPID = AHHCPU7
IST1577I HEADER SIZE = 4092 DATA SIZE = 60 STORAGE = ***NA***
IST1221I WRITE DEV = 0CE6 STATUS = ACTIVE     STATE = ONLINE
IST1221I WRITE DEV = 0CE7 STATUS = ACTIVE     STATE = ONLINE
IST1221I WRITE DEV = 0CE8 STATUS = ACTIVE     STATE = ONLINE
IST1221I WRITE DEV = 0CE9 STATUS = ACTIVE     STATE = ONLINE
IST1577I HEADER SIZE = 4092 DATA SIZE = 60 STORAGE = DATASPACE
IST1221I READ  DEV = 0CC6 STATUS = ACTIVE     STATE = ONLINE
IST1221I READ  DEV = 0CC7 STATUS = ACTIVE     STATE = ONLINE
IST1221I READ  DEV = 0CC8 STATUS = ACTIVE     STATE = ONLINE
IST314I END
```

Displaying an active XCF TRL entry:

```
d net,trl,trle=istt1q2q
IST097I DISPLAY ACCEPTED
IST075I NAME = ISTT1Q2Q, TYPE = TRLE 944
IST486I STATUS= ACTIV, DESIRED STATE= ACTIV
IST087I TYPE = LEASED             , CONTROL = XCF , HPDT = *NA*
IST1715I MPCLEVEL = HPDT       MPCUSAGE = SHARE
IST1717I ULPID = ISTP1Q2Q
IST1503I XCF TOKEN = 02000002001B0002     STATUS = ACTIVE
IST1502I ADJACENT CP = NETA.SSCP2A
IST314I END
```

Displaying an active TCP TRL entry:

```
d net,trl,trle=iutx0d20
IST097I DISPLAY ACCEPTED
IST075I NAME = IUTX0D20, TYPE = TRLE 948
IST486I STATUS= ACTIV, DESIRED STATE= ACTIV
IST087I TYPE = LEASED             , CONTROL = TCP , HPDT = *NA*
IST1717I ULPID = TCPCS2
IST1221I READ  DEV = 0D20 STATUS = ACTIVE     STATE = N/A
IST1221I WRITE DEV = 0D21 STATUS = ACTIVE     STATE = N/A
IST314I END
```

Displaying an inactive TRL entry:

```
d net,trl,trle=trle1b
IST097I DISPLAY ACCEPTED
IST075I NAME = TRLE1B, TYPE = TRLE 940
IST486I STATUS= NEVAC, DESIRED STATE= INACT
IST087I TYPE = LEASED             , CONTROL = MPC , HPDT = *NA*
IST1715I MPCLEVEL = HPDT       MPCUSAGE = SHARE
IST314I END
```

Displaying an active OSA Direct Express TRL entry:

```
d net,trl,trle=of8geth
IST097I DISPLAY ACCEPTED
IST075I NAME = OF8GETH, TYPE = TRLE
IST486I STATUS= ACTIV, DESIRED STATE= ACTIV
IST087I TYPE = LEASED             , CONTROL = MPC , HPDT = YES
IST1715I MPCLEVEL = QDIO       MPCUSAGE = SHARE
IST1716I PORTNAME = OF8GETHP   LINKNUM =   0   OSA CODE LEVEL = 0314
IST1577I HEADER SIZE = 4096 DATA SIZE = 0 STORAGE = ***NA***
IST1221I WRITE DEV = 2E81 STATUS = ACTIVE     STATE = ONLINE
IST1577I HEADER SIZE = 4092 DATA SIZE = 0 STORAGE = ***NA***
IST1221I READ  DEV = 2E80 STATUS = ACTIVE     STATE = ONLINE
IST1221I DATA  DEV = 2E82 STATUS = ACTIVE     STATE = N/A
IST1724I I/O TRACE = OFF  TRACE LENGTH = *NA*
IST1717I ULPID = TCPSVT
IST1757I PRIORITY1: UNCONGESTED PRIORITY2: UNCONGESTED
IST1757I PRIORITY3: UNCONGESTED PRIORITY4: UNCONGESTED
IST1221I DATA  DEV = 2E83 STATUS = RESET      STATE = N/A
IST1724I I/O TRACE = OFF  TRACE LENGTH = *NA*
IST1221I DATA  DEV = 2E84 STATUS = RESET      STATE = N/A
IST1724I I/O TRACE = OFF  TRACE LENGTH = *NA*
IST1221I DATA  DEV = 2E85 STATUS = RESET      STATE = N/A
IST1724I I/O TRACE = OFF  TRACE LENGTH = *NA*
IST314I END
```

Displaying a HiperRSocket TRLE:

```
d net,trl,trle=iutiqdio
IST097I DISPLAY ACCEPTED
IST075I NAME = IUTIQDIO, TYPE = TRLE 952
IST486I STATUS= ACTIV, DESIRED STATE= ACTIV
IST087I TYPE = LEASED             , CONTROL = MPC , HPDT = YES
IST1715I MPCLEVEL = QDIO       MPCUSAGE = SHARE
IST1716I PORTNAME = IUTIQDIO     LINKNUM =   0
IST1577I HEADER SIZE = 4096 DATA SIZE = 64 STORAGE = ***NA***
IST1221I WRITE DEV = 0E29 STATUS = ACTIVE     STATE = ONLINE
IST1577I HEADER SIZE = 4092 DATA SIZE = 64 STORAGE = DATASPACE
IST1221I READ  DEV = 0E28 STATUS = ACTIVE     STATE = ONLINE
IST1221I DATA  DEV = 0E2A STATUS = ACTIVE     STATE = N/A
IST1724I I/O TRACE = OFF  TRACE LENGTH = *NA*
IST1717I ULPID = TCPCS2
IST1221I DATA  DEV = 0E2B STATUS = RESET      STATE = N/A
IST1724I I/O TRACE = OFF  TRACE LENGTH = *NA*
IST314I END
```

DISPLAY TSOUSER command

```
►►──DISPLAY NET,TSOUSER──,ID=user_id──────────────────────────────────►◄
```

Abbreviations

Operand	Abbreviation
DISPLAY	D
TSOUSER	U

Purpose

The DISPLAY TSOUSER (TSO user) command displays the status of a TSO user ID.

Operands

ID=user_id
Specifies the TSO user ID about which information is to be displayed. Data for all address spaces started by a TSO user is shown if ID is specified.

Resulting display

The resulting display shows:

- The name and status of the TSO user ID
- An indication of whether the TSO trace is active for this user ID
- The application program name associated with the TSO user space
- The secoundary logical unit (SLU) the TSO user is using
- If the SLU is a Telnet client, the IP address, the IP port number, and (if it exists) the DNS name

Examples

Displaying a TSO user ID:

```
d net,tsouser,id=user1
IST097I DISPLAY ACCEPTED
IST075I NAME = USER1, TYPE = TSO USERID
IST486I STATUS= ACTIV, DESIRED STATE= N/A
IST576I TSO TRACE = OFF
IST1212I ACBNAME = TSO0001 STATUS = ACT/S
IST1212I LUNAME  = NETA.A50A722 STATUS = ACT/S
IST314I END
```

Displaying a TSO user ID when the SLU is a Telnet client:

```
d net,tsouser,id=user1
IST097I DISPLAY ACCEPTED
IST075I NAME = USER1, TYPE = TSO USERID 949
IST486I STATUS= ACTIV, DESIRED STATE= N/A
IST576I TSO TRACE = OFF
IST262I ACBNAME = TSO0001, STATUS = ACT/S
IST262I LUNAME = TCPM1011, STATUS = ACT/S----Y
IST1727I DNS NAME: VIC127.TCP.RALEIGH.IBM.COM
IST1669I IPADDR..PORT 9.67.113.83..1027
IST314I END
```

DISPLAY USERVAR command

Display all USERVARs:

```
►►──DISPLAY NET,USERVAR──┬─,MAX=DSPLYDEF_start_option_value─┬──────────────────►◄
                         └─,MAX=──┬─*──────────────────────┬─┘
                                  └─number_of_resources────┘
```

Display a specific USERVAR:

```
►►──DISPLAY NET,USERVAR──,ID=uservar_name──────────────────────────────────►◄
```

Abbreviations

Operand	Abbreviation
DISPLAY	D

Purpose

The DISPLAY USERVAR command displays the VTAM application names associated with a specified USERVAR, or all known USERVARs and the application names associated with them.

Network-qualified USERVAR values can be displayed in the output of the DISPLAY USERVAR command. If the VALUE operand on the MODIFY USERVAR command is a network-qualified name, or if the class of USERVAR is automatic (VTAM-managed), the output from the DISPLAY USERVAR command for that USERVAR has the network-qualified name in it. If the VALUE operand on the MODIFY USERVAR command is a non-network-qualified name, the output from the DISPLAY USERVAR command for that USERVAR does not have the network-qualified name in it.

Operands

ID=uservar_name
Specifies the name of a USERVAR.

If you specify the ID operand, do not specify MAX.

MAX
Specifies the maximum number of application names that VTAM displays for this command.

If you specify the MAX operand, do not specify ID.

MAX=*
Specifies that the value of the DSPLYMAX start option is used to limit the display output.

MAX=number_of_resources
Specifies the number of application names to display for this command. The valid range is 1–value of DSPLYMAX. The default is the value specified for the DSPLYDEF start option.

Specifying MAX limits the display output. VTAM searches only for the number of instances that you have specified. When that number is found,

VTAM does not search any further. This saves processing time for the command and gives you control over the amount of display output generated by the command. If fewer application names are found than you have specified on MAX, VTAM displays only the application names that are found.

Resulting display

The resulting display shows:

- The named USERVAR and its corresponding VTAM application program name. If you omit ID=*uservar_name*, VTAM displays all known USERVARs and the application program names associated with them.
- The USERVAR class (automatic or user-managed) and the type of USERVAR (static, dynamic, or volatile).
- Whether an installation-wide exit (UVEXIT) routine is used for the USERVAR.

Examples

Displaying all USERVARs:

```
d net,uservar
IST097I DISPLAY ACCEPTED
IST350I DISPLAY TYPE = USERVAR
IST1019I USERVAR  VALUE             CLASS TYPE     EXIT APPC
IST1029I APPL2    NETB.APPLB22      USER  DYNAMIC  NO   NO
IST1029I APPL1    NETB.APPLB11      USER  DYNAMIC  NO   NO
IST1454I 2 USERVARS(S) DISPLAYED
IST314I END
```

Displaying a specific USERVAR:

```
d net,uservar,id=echo01a
IST097I DISPLAY ACCEPTED
IST350I DISPLAY TYPE = USERVAR
IST1019I USERVAR  VALUE             CLASS TYPE     EXIT APPC
IST1029I ECHO01A  ECHO01A           USER  DYNAMIC  NO   NO
IST314I END
```

DISPLAY VTAMOPTS command

Display selected start options:

```
                          ┌─,FORMAT=CURRENT──────┐
►►─DISPLAY NET,VTAMOPTS──┤                      ├──────────────────────►
                          └─,FORMAT=─┬─CURRENT─┬─┘
                                     ├─COMPLETE─┤
                                     └─MODIFIED─┘

  ┌─,OPTION=*──────────────────┐
►─┤                            ├──────────────────────────────────────►◄
  └─,OPTION=─┬─*──────────────┬─┘
             ├─(*)────────────┤
             ├─option─────────┤
             │   ┌──,──┐      │
             └─(─┴─option─┴─)─┘
```

Display a group of related start options:

```
                          ┌─,FORMAT=CURRENT──────┐
►►─DISPLAY NET,VTAMOPTS──┤                      ├──,FUNCTION=─┬─APPNCHAR──┬──►◄
                          └─,FORMAT=─┬─CURRENT─┬─┘            ├─CONNECT───┤
                                     ├─COMPLETE─┤              ├─MESSAGES──┤
                                     └─MODIFIED─┘              ├─PERFTUNE──┤
                                                               ├─RECSTATS──┤
                                                               ├─SECURITY──┤
                                                               ├─SESSCONT──┤
                                                               ├─SSCPCP────┤
                                                               ├─STORAGE───┤
                                                               ├─TRACDUMP──┤
                                                               ├─VTAMINIT──┤
                                                               └─ZAPCON────┘
```

Abbreviations

Operand	Abbreviation
DISPLAY	D
FORMAT=COMPLETE	COMP
FORMAT=CURRENT	CUR
FORMAT=MODIFIED	MOD
OPTION	OPT

When using an abbreviation in place of an operand, code the abbreviation exactly as shown in the table. For example, when coding the abbreviation for FORMAT=CURRENT, code only CUR. Do not code FORMAT=CUR.

Purpose

The DISPLAY VTAMOPTS (VTAM start options) command displays information about VTAM start options. The VTAM version and release, the date and time when VTAM was started, the component ID, and VTAM's node type are also displayed.

Operands

FORMAT
Specifies the type of information to be displayed.

FORMAT=CURRENT
Displays the current value of one or more start options.

FORMAT=COMPLETE
Displays detailed information about one or more start options. For each start option, VTAM displays the current value, the value that VTAM initialized with, and the source of the value that VTAM initialized with. The source can be a value specified in an ATCSTRxx start option list, a value entered by the operator during VTAM start, or a default value used in the absence of any other specification.

FORMAT=MODIFIED
Displays information about start options that have been modified since VTAM initialization. If an option has not been modified, it is not displayed.

For each modified start option, VTAM displays the current value, the value that VTAM initialized with, and the source of the value that VTAM initialized with. The source can be a value specified in an ATCSTRxx start option list, a value entered by the operator during VTAM start, or a default value used in the absence of any other specification.

FUNCTION
Specifies a group of related start options to display. If you specify FUNCTION, do not specify OPTION on the same command.

FUNCTION=APPNCHAR
Displays the start options that define APPN characteristics. The start options displayed using FUNCTION=APPNCHAR are also displayed using other specifications for FUNCTION. The start options displayed using FUNCTION=APPNCHAR are:

APPNCOS	BN	BNDYN
BNORD	CDSERVR	CDSREFER
CONNTYPE	CPCP	DIRSIZE
DIRTIME	DLURSAW	DUPDEFS
DYNADJCP	HPR	HPRARB
HPRNCPBF	HPRPST	INITDB
IOPURGE	IPADDR	MAXLOCAT
NETID	NNSPREF	NODETYPE
NUMTREES	PSRETRY	PSWEIGHT
RESUSAGE	ROUTERES	SACONNS
SAVERSCV	SECLVLCP	SNVC
SORDER	SRCHRED	SRCOUNT
SRTIMER	SSCPNAME	SSEARCH
TCPNAME	VERIFYCP	VFYRED
VFYREDTI	VRTG	VRTGCPCP
XCFINIT		

FUNCTION=CONNECT
Displays the start options that affect connectivity. The start options displayed using FUNCTION=CONNECT are:

ALSREQ	AUTHLEN	CONNTYPE
CPCP	DISCNTIM	DYNHPPFX
DYNPUPFX	DYNVNPFX	HPR
HPRNCPBF	IQDCHPID	NNSPREF
SACONNS	SLOWVAL	SNVC
SSDTMOUT	VRTG	VRTGCPCP
XCFINIT	XNETALS	

FUNCTION=MESSAGES

Displays the start options that affect messages. The start options displayed using FUNCTION=MESSAGES are:

ASIRFMSG	CNMTAB	CNNRTMSG
DSPLYDEF	DSPLYMAX	DSPLYWLD
ESIRFMSG	FLDTAB	FSIRFMSG
IOMSGLIM	MSGLEVEL	MSGMOD
PLUALMSG	SIRFMSG	SLUALMSG
SUPP	VARYWLD	

FUNCTION=PERFTUNE

Displays the start options that affect performance and tuning. The start options displayed using FUNCTION=PERFTUNE are:

AUTOTI	BSCTMOUT	CACHETI
CDRSCTI	CINDXSIZ	DIRSIZE
DIRTIME	HNTSIZE	HPRARB
HPRPST	HSRTSIZE	IOINT
IOPURGE	MAXLOCAT	MAXLURU
MIHTMOUT	MXSAWBUF	MXSSCPRU
NCPBUFSZ	NSRTSIZE	NUMTREES
OSIEVENT	OSITOPO	OSRTSIZE
PDTRCBUF	PIUMAXDS	PSRETRY
PSWEIGHT	SAWMAXDS	SAWMXQPK
SONLIM	SRCHRED	SRCOUNT
SRTIMER	UPDDELAY	VFYRED
VFYREDTI	VOSDEACT	VTAMEAS

FUNCTION=RECSTATS

Displays the start options that affect recording and statistics. The start options displayed using FUNCTION=RECSTATS are:

BSCMDRS	NMVTLOG	PPOLOG
SDLCMDRS	TNSTAT	

FUNCTION=SECURITY

Displays the start options that affect session security. The start options displayed using FUNCTION=SECURITY are:

ENCRPREF	ENCRYPTN	SECLVLCP
VERIFYCP		

FUNCTION=SESSCONT

Displays the start options that affect session control. The start options displayed using FUNCTION=SESSCONT are:

AFFDELAY	APPNCOS	ASYDE
AUTORTRY	BNDYN	BNORD
CDRDYN	CMPMIPS	CMPVTAM
CPCDRSC	DIALRTRY	DLRORDER
DUPDEFS	DYNADJCP	DYNASSCP
DYNDLGMD	DYNLU	DYNMODTB
HOTIOTRM	ISTCOSDF	RESUSAGE
ROUTERES	SMEAUTH	SORDER
SSCPDYN	SSCPORD	SSEARCH
SWNORDER		

FUNCTION=SSCPCP

Displays the start options that define SSCP or CP characteristics. The start options displayed using FUNCTION=SSCPCP are:

BN	CDSERVR	DATEFORM
ENHADDR	GWSSCP	HOSTPU
HOSTSA	LIMINTCP	MAINTLVL
MAXSSCPS	MAXSUBA	MXSUBNUM
NETID	NNSPREF	NODETYPE
NQNMODE	SSCPID	SSCPNAME
STRGR	STRMNPS	TRANSLAT
USSTAB		

FUNCTION=STORAGE

Displays the start options that define storage usage, except for the buffer pool start options. The start options displayed using FUNCTION=STORAGE are:

API64R	CSALIMIT	CSA24
DLRTCB	IRNSTRGE	

FUNCTION=TRACDUMP

Displays the start options that affect traces and dumps. The start options displayed using FUNCTION=TRACDUMP are:

INOPDUMP	PSSTRACE	SNAPREQ

FUNCTION=VTAMINIT

Displays the start options that affect VTAM initialization. The start options displayed using FUNCTION=VTAMINIT are:

COLD	CONFIG	INITDB
LIST	NODELST	OSIMGMT
WARM		

FUNCTION=ZAPCON

Displays the start options that once were zappable constants. The start options displayed using FUNCTION=ZAPCON are also displayed using other specifications for FUNCTION. The start options displayed using FUNCTION=ZAPCON are:

ASIRFMSG	BSCTMOUT	CINDXSIZ
ESIRFMSG	FSIRFMSG	HNTSIZE
HSRTSIZE	INOPDUMP	IOMSGLIM
IRNSTRGE	MAXLURU	MAXSSCPS
MIHTMOUT	MXSAWBUF	MXSSCPRU
MXSUBNUM	NCPBUFSZ	OSRTSIZE
PDTRCBUF	PIUMAXDS	PLUALMSG
PSSTRACE	SAWMAXDS	SAWMXQPK
SDLCMDRS	SIRFMSG	SLUALMSG
SNAPREQ	SSDTMOUT	TRANSLAT
VTAMEAS		

OPTION=option
Specifies one or more start options to display. If you specify OPTION, do not specify FUNCTION on the same command. If OPTION=* is specified or assumed by default, VTAM displays information about all start options except PROMPT, NOPROMPT, LISTBKUP, and the trace and buffer pool start options. The DISPLAY TRACES command and the DISPLAY BFRUSE command can be used to display trace and buffer pool information. See the *z/OS Communications Server: SNA Resource Definition Reference* for a description of each start option.

For OPTION=LIST, VTAM displays the name of the start option list used during start processing. The value can be a supplemental list, such as LIST=1A. However, if the supplemental list contains errors and VTAM reverts to using defaults during start processing because LISTBKUP=DEFAULTS is in effect, the user-defined default list will be displayed. You can also issue a D NET,VTAMOPTS,FORMAT=COMPLETE command to find out the origin of the start option values.

For OPTION=CNMTAB, VTAM displays *BLANKS* if a user defined table was not loaded. You can issue a D NET,VTAMOPTS,FORMAT=COMPLETE command to find out the origin of the start option value.

For OPTION=ENCRYPTN, the display might not exactly match the value specified for the ENCRYPTN start option.

The following list shows the values that can be displayed for ENCRYPTN for each value specified on the start option:

Start value	Display value
NO	NO
YES, 24, or 31	
	24 or 31
CCA	CCA_24 or CCA_31
CUSP	CUSP_24 or CUSP_31

For OPTION=OSIMGMT, VTAM displays only the value of the OSIMGMT start option. It does not indicate whether CMIP services is active.

For OPTION=STRGR or OPTION=STRMNPS, if no coupling facility is in use, this command shows the value as ***NA***. See *z/OS MVS Setting Up a Sysplex* for more information about coupling facilities and CFRM.

See the *z/OS Communications Server: SNA Network Implementation Guide* for more information about the sources of start options and which source takes precedence.

Resulting display

The resulting display shows:

- The VTAM version and release
- The time and date that VTAM was started
- The component ID
- The node type
- Information about the specified start options

If a start option is not applicable to your configuration, it is displayed with ***NA***. For example, ROUTERES is applicable only when VTAM is a network node. At an end node, it would be displayed as ROUTERES=***NA***.

Examples

Displaying start options that have been modified:

```
d net,vtamopts,opt=(sscpid,dsplydef,cmpvtam,cpcp,tnstat),format=modified
IST097I DISPLAY ACCEPTED
IST1188I ACF/VTAM CSV2R10 STARTED AT 11:54:32 ON 03/23/00
IST1349I COMPONENT ID IS 5695-11701-10A
IST1348I VTAM STARTED AS INTERCHANGE NODE
IST1309I START OPTION  CURRENT VALUE     ORIGINAL VALUE    ORIGIN
IST1310I CMPVTAM       2                 0                 DEFAULT
IST1310I CPCP          NO                YES               ATCSTR1A
IST1310I DSPLYDEF      32767             65535             ATCSTR00
IST1310I TNSTAT        OFF               CNSL,TIME=1       OPERATOR
IST314I END
```

Displaying complete information about selected start options:

```
d net,vtamopts,opt=(dynlu,dsplydef,list,cmpvtam,supp,cpcp,tnstat),format=complete
IST097I DISPLAY ACCEPTED
IST1188I ACF/VTAM CSV2R10 STARTED AT 11:54:32 ON 03/23/00
IST1349I COMPONENT ID IS 5695-11701-10A
IST1348I VTAM STARTED AS INTERCHANGE NODE
IST1309I START OPTION  CURRENT VALUE     ORIGINAL VALUE    ORIGIN
IST1310I CMPVTAM       2                 0                 DEFAULT
IST1310I CPCP          NO                YES               ATCSTR1A
IST1310I DSPLYDEF      32767             65535             ATCSTR00
IST1310I DYNLU         YES               YES               ATCSTR1A
IST1310I LIST          1A                1A                OPERATOR
IST1310I SUPP          NOSUP             NOSUP             ATCSTR00
IST1310I TNSTAT        OFF               CNSL,TIME=1       OPERATOR
IST314I END
```

Displaying all VTAM start options:

```
d net,vtamopts
IST097I DISPLAY ACCEPTED
IST1188I VTAM CSV1R4 STARTED AT 15:51:04 ON 05/07/02
IST1349I COMPONENT ID IS 5695-11701-140
IST1348I VTAM STARTED AS INTERCHANGE NODE
IST1189I AFFDELAY = 600                ALSREQ   = NO
IST1189I API64R   = ***NA***           APPNCOS  = NONE
IST1189I ASIRFMSG = OLUSSCP            ASYDE    = TERM
IST1189I AUTHLEN  = YES                AUTORTRY = AUTOCAP
IST1189I AUTOTI   = 0                  BN       = NO
IST1189I BNDYN    = ***NA***           BNORD    = ***NA***
IST1189I BSCMDRS  = (STATS,INOPS)      BSCMDRS  =
IST1189I BSCTMOUT = 286                CACHETI  = 8
IST1189I CDRDYN   = YES                CDRSCTI  = 480S
IST1189I CDSERVR  = NO                 CDSREFER = 1
IST1189I CINDXSIZ = 8176               CMPMIPS  = 100
IST1189I CMPVTAM  = 0                  CNMTAB   = *BLANKS*
```

```
IST1189I CNNRTMSG = SUPPRESS            COLD     = YES
IST1189I CONFIG   = 1A                  CONNTYPE = APPN
IST1189I CPCDRSC  = NO                  CPCP     = YES
IST1189I CSALIMIT = 946461K             CSA24    = NOLIMIT
IST1189I DATEFORM = MDY                 DIALRTRY = YES
IST1189I DIRSIZE  = 0                   DIRTIME  = 691200S
IST1189I DISCNTIM = (15,0)              DLRORDER = STATNID
IST1189I DLRTCB   = 10                  DLURSAW  = YES
IST1189I DSPLYDEF = 65535               DSPLYMAX = 65535
IST1189I DSPLYWLD = FULLWILD            DUPDEFS  = ALL
IST1189I DYNADJCP = YES                 DYNASSCP = YES
IST1189I DYNDLGMD = NONE                DYNHPPFX = CNR
IST1189I DYNLU    = YES                 DYNMODTB = NONE
IST1189I DYNPUPFX = CN                  DYNVNPFX = CNV
IST1189I ENCRPREF = NONE                ENCRYPTN = 31
IST1189I ENHADDR  = YES                 ESIRFMSG = ALLSSCP
IST1189I FLDTAB   = ISTMSFLD            FSIRFMSG = OLUSSCP
IST1189I GWSSCP   = YES                 HNTSIZE  = 4080
IST1189I HOSTPU   = ISTPUS              HOSTSA   = 1
IST1189I HOTIOTRM = 0                   HPR      = (RTP,RTP)
IST1189I HPRARB   = RESPMODE            HPRNCPBF = NO
IST1189I HPRPST   = LOW          480S   HPRPST   = MEDIUM       240S
IST1189I HPRPST   = HIGH         120S   HPRPST   = NETWRK        60S
IST1189I HSRTSIZE = 9973                INITDB   = ALL
IST1189I INOPDUMP = OFF                 IOINT    = 180
IST1189I IOMSGLIM = 100                 IOPURGE  = 0
IST1189I IPADDR   = 0.0.0.0             IQDCHPID = ***NA***
IST1189I IQDIOSTG = 7.8M(126 SBALS)     IRNSTRGE = 0
IST1189I ISTCOSDF = INDLU               LIMINTCP = ***NA***
IST1189I LIST     = 1A                  MAINTLVL = *BLANKS*
IST1189I MAXLOCAT = 5000                MAXLURU  = 6144
IST1189I MAXSSCPS = 10                  MAXSUBA  = 255
IST1189I MIHTMOUT = 1800                MSGLEVEL = BASE
IST1189I MSGMOD   = NO                  MXSAWBUF = 10000
IST1189I MXSSCPRU = 4096                MXSUBNUM = 511
IST1189I NCPBUFSZ = 512                 NETID    = NETA
IST1189I NMVTLOG  = NPDA                NNSPREF  = ***NA***
IST1189I NODELST  = *BLANKS*            NODETYPE = NN
IST1189I NQNMODE  = NAME                NSRTSIZE = *BLANKS*
IST1189I NUMTREES = 100                 OSIEVENT = PATTERNS
IST1189I OSIMGMT  = NO                  OSITOPO  = ILUCDRSC
IST1189I OSRTSIZE = 43                  PDTRCBUF = 2
IST1189I PIUMAXDS = 200                 PLUALMSG = NOSUPP
IST1189I PPOLOG   = NO                  PSRETRY  = LOW            0S
IST1189I PSRETRY  = MEDIUM         0S   PSRETRY  = HIGH           0S
IST1189I PSRETRY  = NETWRK         0S   PSSTRACE = NORB
IST1189I PSWEIGHT = LESSTHAN            QDIOSTG  = 1.0M(16 SBALS)
IST1189I RESUSAGE = 100                 ROUTERES = 1
IST1189I SACONNS  = YES                 SAVERSCV = (NO,KEEP)
IST1189I SAWMAXDS = 100                 SAWMXQPK = 0
IST1189I SDLCMDRS = (STATS,INOPS)       SECLVLCP = ***NA***
IST1189I SIRFMSG  = ALLSSCP             SLOWVAL  = (0,0)
IST1189I SLUALMSG = NOSUPP              SMEAUTH  = DISCARD
IST1189I SNAPREQ  = 1000                SNVC     = ***NA***
IST1189I SONLIM   = (60,30)             SORDER   = APPN
IST1189I SRCHRED  = OFF                 SRCOUNT  = 10
IST1189I SRTIMER  = 30S                 SSCPDYN  = YES
IST1189I SSCPID   = 1                   SSCPNAME = SSCP1A
IST1189I SSCPORD  = PRIORITY            SSDTMOUT = 30
IST1189I SSEARCH  = YES                 STRGR    = ***NA***
IST1189I STRMNPS  = ***NA***            SUPP     = NOSUP
IST1189I SWNORDER = CPNAME              TCPNAME  = *BLANKS*
IST1189I TNSTAT   = OFF                 TRANSLAT = (0,1,2,3,4,5,6,7)
IST1189I UPDDELAY = 60S                 USSTAB   = *BLANKS*
IST1189I VARYWLD  = FULLWILD            VERIFYCP = NONE
IST1189I VFYRED   = YES                 VFYREDTI = OFF
IST1189I VOSDEACT = NO                  VRTG     = NO
```

```
|                       IST1189I VRTGCPCP = YES                 VTAMEAS  = 32001
|                       IST1189I VTAMSIM  = NONE                WARM     = NO
|                       IST1189I XCFINIT  = ***NA***            XNETALS  = NO
|                       IST314I END
```

DISPLAY VTAMSTOR command

Display storage contents associated with a storage address:

```
►►──DISPLAY NET,VTAMSTOR──,ADDRESS=storage_address──────────────────────────►

►─┬─────────────────────────────┬──────────────────────────────────────────►◄
  │ ,LENGTH=32                  │
  ├─,LENGTH=decimal_number_of_bytes─┤
  └─,XLENGTH=hex_number_of_bytes──┘
```

Display storage contents associated with a module:

```
►►──DISPLAY NET,VTAMSTOR──,MODULE=module_name──────────────────────────────►◄
```

Display storage contents associated with a network address:

```
►►──DISPLAY NET,VTAMSTOR────────────────────────────────────────────────────►

►─,NETADDR=(─┬──────────────────┬─,element_address─┬─────┬─)──────────────►
             └─subarea_address──┘                  │ ,X  │
                                                   ├─,D──┤
                                                   └─,X──┘

►─┬──────────────────────────┬──────────────────────────────────────────────►◄
  └─,NETID=network_id────────┘
```

Display storage contents associated with a resource name:

```
                                                 ┌─,TYPE=RESOURCE──────┐
►►──DISPLAY NET,VTAMSTOR──,RESOURCE=resource_name─┤                     ├──────►◄
                                                 └─,TYPE=─┬─CDRM────────┬─┘
                                                          ├─CP──────────┤
                                                          ├─LUALIAS─────┤
                                                          ├─RESOURCE────┤
                                                          ├─SHADOW──────┤
                                                          ├─SSCP────────┤
                                                          ├─USERVAR─────┤
                                                          └─XCFCP───────┘
```

Abbreviations

Operand	Abbreviation
ADDRESS	ADDR
DISPLAY	D
LENGTH	LEN
MODULE	MOD
RESOURCE	RSC

Operand	Abbreviation
XLENGTH	XLEN

Purpose

The DISPLAY VTAMSTOR command displays storage contents associated with VTAM modules and resources.

Operands

ADDRESS=storage_address
Specifies the address (in hexadecimal). The storage address must be in the range of 0–7FFFFFFF.

LENGTH=decimal_number_of_bytes
Specifies the number of bytes in decimal to display. The valid range is 1–value of DSPLYMAX multiplied by 16.

MODULE=module_name
Specifies a module name (or CSECT name). The module name must be eight characters in length and begin with the VTAM prefixes ACY, IST, IUT, or IVT.

NETADDR
Specifies the network address of a resource. The following notes apply to subrarea_address and element_address:

subarea_address
Specifies the subarea portion of the network address. Leading zeros are acceptable but not required. If omitted, *subarea_address* defaults to the subarea number of the host. Acceptable values are 1–FFFF in hexadecimal; 1–65535 in decimal. If the value is greater than the host's MXSUBNUM start option, the command will be rejected.

element_address
Specifies the element portion of the network address. Leading zeros are acceptable but not required. Acceptable values range from 0–FFFF in hexadecimal; 0–65535 in decimal.

D Indicates the subarea and element addresses are specified in decimal.

X Indicates the subarea and element addresses are specified in hexadecimal.

Notes:

1. To display an Enhanced network address, you must incorporate the index into either the subarea_address or the element_address. Leading zeros are acceptable but not required. If omitted, the index defaults to 0. Acceptable values are 1-1FA in hexadecimal and 1-506 in decimal.
2. To incorporate the index into either the subarea_address or the element_address do the following:
   - In hexadecimal, concatenate the index in front of the 2–byte subarea or element. For example, subarea 2, index 1, element 3 can be entered as NETADDR=(10002,3) or NETADDR=(2,10003).
   - In decimal, multiply the index by 65536 and add it to the subarea or element. For example, subarea 2, index 1, element 3 can be entered as NETADDR=(65538,3,d) or NETADDR=(2,65539,d).

NETID=network_id
Specifies the network identifier. If omitted, the network identifier of the host is used.

RESOURCE=resource_name
Specifies the network-qualified name of the resource for which the resource definition table entry is to be displayed. If the network identifier is omitted, the network of the host is used.

TYPE
Specifies the type of resource that the RESOURCE operand identifies. This operand is only valid when used with the RESOURCE operand. If several types of resources share the same name, TYPE can be used to identify which resource the command should act on.

TYPE=CDRM
Displays the resource definition table entry for the SSCP (represented as a CDRM).

TYPE=CP
Displays the resource definition table entry for the host CP (represented as an application) or an adjacent CP (represented as a CDRSC)

TYPE=LUALIAS
Displays the resource definition table entry for the CDRSC whose name is associated with the LUALIAS. If a network-qualified name is specified, VTAM does not search for an LUALIAS with that resource name. For more information on CDRSCs that are defined with an LUALIAS, see the *z/OS Communications Server: SNA Resource Definition Reference*.

TYPE=RESOURCE
Displays the resource definition table entry for the resource named on the RESOURCE operand. VTAM searches for the resource in the following order:

1. VTAM searches for an SSCP (CDRM), a host CP (application), or an adjacent CP (CDRSC) by the name specified on the RESOURCE operand and displays the resource definition table entry for the first resource found.
2. If VTAM does not find an SSCP, a host CP, or an adjacent CP, it searches for a resource with the name specified on the RESOURCE operand and displays the resource definition table entry for the resource, if it finds it.
3. If VTAM does not find a resource by that name, it searches for a USERVAR with the name specified on the RESOURCE operand and displays the resource definition table entry for the resource, if it finds it.
4. If VTAM does not find a USERVAR by that name, or a USERVAR is found but the resource defined as the value of the USERVAR is not found, it searches for an LUALIAS with the name specified on the RESOURCE operand and displays the resource definition table entry for the CDRSC, if it finds it.

TYPE=SHADOW
Displays the resource definition table entry for a shadow resource, if it exists. Included in the information displayed is the real resource that caused the displayed resource to become a shadow resource.

For more information on shadow resources, see the *z/OS Communications Server: SNA Network Implementation Guide*.

TYPE=SSCP
Displays the resource definition table entry for the SSCP (represented as a CDRM).

TYPE=USERVAR
Displays the resource definition table entry for the resource whose name is associated with the USERVAR.

TYPE=XCFCP
Displays the resource definition table entry for the dynamic XCF local SNA PU representing the connection to another VTAM in the XCF group, when the RESOURCE operand specifies the CP name of the other VTAM.

XLENGTH=hex_number_of_bytes
Specifies the number of bytes in hexadecimal to display. The valid range is 1–value of DSPLYMAX multiplied by 16, converted to hexadecimal.

Resulting display

The resulting display differs depending on the operands specified.

If the ADDRESS operand is specified, the command displays the contents of storage at the specified address.

If the MODULE operand is specified, the command displays:
- The entry point address of the module
- The service level of the module
- The first 32 bytes of the module

If the NETADDR operand is specified, the command displays:
- The name of the associated resource
- The resource definition table entry

If the RESOURCE operand is specified, the command displays:
- The resource definition table entry

Examples

Displaying storage contents associated with a storage address:

```
d net,vtamstor,address=8756000,length=128
IST097I DISPLAY ACCEPTED
IST350I DISPLAY TYPE = VTAMSTOR
IST1573I STORAGE DISPLAY BEGINS AT LOCATION 08756000
IST1574I   -010 0881E120 00000000 E3406000 000C8010 *.A......T -.....
IST1574I   +000 00000000 00000000 B376630A 68184202 *................
IST1574I   +010 B3765E66 C27F6007 0878C580 0881DFE0 *..;.B"-...E..A..
IST1574I   +020 D9C5D3E2 1A240000 08926B90 0886F010 *RELS.....K,..F0.
IST1574I   +030 88F11578 00000000 0886F010 00000000 *H1.......F0.....
IST1574I   +040 E4D72342 1A000000 006F6318 006F6320 *UP.......?...?..
IST1574I   +050 006F6450 000000D4 04000004 00000000 *.?.&...M........
IST1574I   +060 D9C5D3E2 1A150000 08926B90 08D631F0 *RELS.....K,..O.0
IST1574I   +070 88DE40D8 00000000 006F6318 00000000 *H. Q.....?......
IST314I END
```

Displaying storage contents associated with a module:

```
d net,vtamstor,module=istinm01
IST097I DISPLAY ACCEPTED
IST350I DISPLAY TYPE = VTAMSTOR
IST1571I ISTINM01 ENTRY POINT IS 01EA00E8  LEVEL IS  96.184
IST1574I   +000 47F0F014 0FC9E2E3 C9D5D4F0 F140F9F6 *.00..ISTINM01 96
IST1574I   +010 4BF1F8F4 90ECD00C 18CF41B0 CFFF50D0 *.184..........&.
IST314I END
```

Displaying storage contents associated with a network address:

```
d net,vtamstor,netaddr=(10001,A)
IST097I DISPLAY ACCEPTED
IST350I DISPLAY TYPE = VTAMSTOR
IST075I NAME = NETA.SSCP2A, TYPE = ADJACENT CP
IST1863I SUBAREA INDEX ELEMENT
```

```
IST1864I X'0001' ( 1) X'0001' ( 1) X'000A' ( 10)
IST1573I RDTE STORAGE DISPLAY BEGINS AT LOCATION 06EDB0D0
IST1574I +000 E2E2C3D7 F2C14040 86ECB02C 00830700 *SSCP2A F....C..
IST1574I +010 00000000 00000000 00200000 06EDB180 *................
IST1574I +020 06EDB138 00000000 FFAC1088 00000000 *...........H....
IST1574I +030 0741A048 00000000 00000000 05050505 *................
IST1574I +040 00090001 10000000 00000000 00000000 *................
IST1574I +050 00000000 00000000 C06D0100 00800000 *........_......
IST1574I +060 00000000 00000000 06E0C188 06E0C010 *..........AH....
IST1574I +070 06E0C188 06E0C010 00000002 00000000 *..AH............
IST1574I +080 02010101 24700033 38000000 00000000 *................
IST1574I +090 00000000 00000000 00000000 00000000 *................
IST1574I +0A0 00000000 06DFE010 06EDD070 00000000 *................
IST1574I +0B0 B776A13C E49F1B88 01000000 20000000 *....U..H........
IST1574I +0C0 00000000 06DF7010 E2E2C3D7 F1C14040 *........SSCP1A
IST1574I +0D0 00000000 00000000 D5C5E3C1 40404040 *........NETA
IST1574I +0E0 E2E2C3D7 F2C14040 40404040 40404040 *SSCP2A
IST1574I +0F0 00000000 00000000 00000000 00000000 *................
IST1574I +100 00009004 00F00000 06E00010 00000000 *.....0..........
IST1574I +110 00000000 E2E2C3D7 F2C14040 D5C5E3C1 *....SSCP2A NETA
IST1574I +120 40404040 00000000 00000000 00000000 * ............
IST1574I +130 00000000 *....
IST924I -------------------------------------------------------------
IST1573I RDTE PROFILE STORAGE DISPLAY BEGINS AT LOCATION 06EDD070
IST1574I +000 00000001 00000000 00000000 00000000 *................
IST1574I +010 00000000 00000000 00000000 00000000 *................
IST1574I +020 00000000 40404040 40404040 40404040 *....
IST1574I +030 40404040 00000000 00000000 00000000 * ............
IST1574I +040 00000000 00000000 00000000 00000000 *................
IST1574I +050 00000000 00000000 *........
IST314I END
```

Displaying storage contents associated with a resource name:

```
d net,vtamstor,resource=neta.appl8
IST097I DISPLAY ACCEPTED
IST350I DISPLAY TYPE = VTAMSTOR
IST075I NAME = NETA.APPL8, TYPE = APPL
IST1863I SUBAREA INDEX ELEMENT
IST1864I X'0001' ( 1) X'0001' ( 1) X'0055' ( 85)
IST1573I RDTE STORAGE DISPLAY BEGINS AT LOCATION 06ED34A4
IST1574I +000 C1D7D7D3 F8404040 80000000 00550200 *APPL8 ........
IST1574I +010 00000001 00010055 00000000 06ED3554 *................
IST1574I +020 06ED350C 00000124 00000124 00000000 *................
IST1574I +030 06ED1C08 00000000 00000000 02000200 *................
IST1574I +040 00010008 10010010 00000000 00E030A8 *...............Y
IST1574I +050 800219E6 00000000 C06D0000 00800000 *...W....._......
IST1574I +060 00000000 00000000 00000000 00000000 *................
IST1574I +070 00000000 00000000 00000000 00000000 *................
IST1574I +080 07010701 00750000 08800000 06ED3380 *................
IST1574I +090 06ED35C8 00000000 00000000 20000400 *...H............
IST1574I +0A0 00000000 00000000 06EDD010 00000000 *................
IST1574I +0B0 00000000 00000000 00000000 00000000 *................
IST1574I +0C0 01FD0000 00000000 0000A000 0001C000 *................
IST1574I +0D0 C1D7D7D3 F8404040 40404040 40404040 *APPL8
IST1574I +0E0 00000000 00000000 00000000 00000000 *................
IST1574I +0F0 00000000 00000000 00000000 00000000 *................
IST1574I +100 00000000 00000000 00000000 00000000 *................
IST1574I +110 40404040 40404040 000F4240 00000000 * ... ....
IST1574I +120 00000000 *....
IST924I -------------------------------------------------------------
IST1573I RDTE PROFILE STORAGE DISPLAY BEGINS AT LOCATION 06EDD010
IST1574I +000 00000046 00000000 00000000 00000000 *................
IST1574I +010 00000000 00000000 00000000 00000000 *................
IST1574I +020 00000000 00000000 00000000 00000000 *................
```

```
IST1574I +030 00000000 00000000 00000000 00000000 *................
IST1574I +040 00000000 00000000 00000000 00000000 *................
IST1574I +050 00000000 00000000 *........
IST314I END
```

HALT command

```
                 ┌─,CDLINK=ACT──────┐
►►─HALT NET──────┤                  ├──────────────────────────────────────►◄
                 └─,CDLINK=──┬─ACT─┬─┘
                             └─INACT─┘
```

Abbreviations

Operand	Abbreviation
HALT	Z

Purpose

The HALT command requests a normal halt of VTAM without disrupting active LU-LU sessions. (See also the HALT CANCEL command and the HALT QUICK command.)

CS z/OS upper layer protocol (ULP) service access points (SAPs) will also not be disrupted.

When normal HALT is issued for a VTAM, none of the sessions on that VTAM will be able to be recovered using the MNPS function.

If VTAM was defined as a network node or interchange node and a checkpoint data set is available, VTAM takes checkpoints of the directory database and the topology database during normal HALT processing.

Operands

CDLINK
Specifies whether any active, leased, cross-domain SDLC links between NCPs are to remain active after the NCPs have been deactivated.

This operand is effective only on the first HALT command. Any CDLINK specifications on subsequent HALT commands are ignored.

CDLINK=ACT
Specifies that any active cross-domain SDLC links are to remain active after the NCP major nodes are deactivated, so that information being routed through the NCPs can continue to be so routed. That is, any cross-domain sessions that use the NCPs as transit nodes can continue.

CDLINK=INACT
Specifies that cross-domain SDLC links are to be deactivated, along with the rest of the domain. This disrupts any sessions through those cross-domain links.

HALT CANCEL command

```
                          ┌─,DUMP=NO──────┐
►►─HALT NET,CANCEL─────┼───────────────┼──────────────────────────────────►◄
                          └─,DUMP=─┬─NO──┬┘
                                   └─YES─┘
```

Abbreviations

Operand	Abbreviation
HALT	Z

Purpose

The HALT CANCEL command should be used if the HALT and HALT QUICK commands do not terminate VTAM. This command depends only on the proper functioning of the operating system's abnormal termination facilities.

CS z/OS upper layer protocol (ULP) service access points (SAPs) will be abnormally terminated.

This command does not terminate multinode persistent sessions; therefore, the sessions are recoverable

The HALT CANCEL command results in an abend of VTAM with a system completion code of X'0A9'. No further I/O operations are performed. VTAM application programs having a TPEND exit are notified of a VTAM shutdown, and data in the process of being transmitted might be lost. If the TPEND exit cannot be scheduled, the application program is abnormally terminated. In extraordinary circumstances, the operator might have to cancel some application programs. It is a good idea to shut down application programs (have them close their VTAM ACB) before you issue the HALT CANCEL command.

It is possible that the MVS operator console might be hung after you issue a HALT CANCEL command, for example if a message group is truncated before it can be displayed. You can clear the console by issuing the MVS command **K Q**.

VTAM does **not** take checkpoints of the directory database and the topology database during HALT CANCEL processing.

Operands

DUMP
Specifies whether a console dump is to be written to a SYS1.DUMP dataset before VTAM is terminated.

DUMP=YES
Specifies that a console dump is to be written before VTAM is terminated.

DUMP=NO
Specifies that a console dump is not to be written before VTAM is terminated.

HALT QUICK command

```
                        ┌─,CDLINK=ACT──────────┐
►►─HALT NET,QUICK──┤                          ├──────────────────────────────►◄
                        └─,CDLINK=──┬─ACT──┬──┘
                                    └─INACT─┘
```

Abbreviations

Operand	Abbreviation
HALT	Z

Purpose

You can use the HALT QUICK command to halt VTAM more quickly than with a normal HALT command. However, HALT QUICK disrupts LU-LU sessions. In a session using multiple resources, you must wait for any deactivation requests to complete before you issue this command. Otherwise, you will have to issue the VARY INACT command to force deactivation of the session. (See the TYPE=FORCE operand of the VARY INACT command on page 497 for more information on forced deactivation.)

VTAM will initiate deactivation of CS z/OS upper layer protocol (ULP) service access points (SAPs).

This commands causes sessions to terminate. Multinode persistent sessions are not recoverable.

If a VTAM dump, load, or restart subtask is active when a HALT QUICK command is issued, the subtask is detached and a system completion code of X'13E' or X'33E' results. VTAM termination continues.

If VTAM was defined as a network node or interchange node and a checkpoint data set is available, VTAM takes checkpoints of the directory database and the topology database during HALT QUICK processing.

Operands

CDLINK

Specifies whether any active cross-domain SDLC links between NCPs are to remain active after the NCPs have been deactivated.

This operand is effective only on the first HALT QUICK command. Any CDLINK specifications on subsequent HALT QUICK commands are ignored.

CDLINK=ACT

Specifies that any active, leased, cross-domain SDLC links are to remain active after the NCP major nodes are deactivated, so that information being routed through the NCPs can continue to be so routed. That is, any cross-domain sessions that use the NCPs as transit nodes can continue.

CDLINK=INACT

Specifies that cross-domain SDLC links are to be deactivated, along with the rest of the domain. This disrupts any sessions through these cross-domain links.

MODIFY ALSLIST command

Add an entry to an adjacent link station list:

```
►►──MODIFY procname,ALSLIST──,ACTION=ADD──,ID=──┬─*──────────────────┬──────────►
                                                ├─cdrsc_major_node─┤
                                                └─cdrsc_name───────┘

►─,NEWALS=adjacent_link_station_name──────────────────────────────────────────►◄
```

Delete an entry from an adjacent link station list:

```
►►──MODIFY procname,ALSLIST──,ACTION=DELETE──,ID=──┬─*──────────────────┬──────────►
                                                   ├─cdrsc_major_node─┤
                                                   └─cdrsc_name───────┘

►─,OLDALS=adjacent_link_station_name──────────────────────────────────────────►◄
```

Replace an entry in an adjacent link station list:

```
►►──MODIFY procname,ALSLIST──,ACTION=REPLACE──,ID=──┬─*──────────────────┬──────────►
                                                    ├─cdrsc_major_node─┤
                                                    └─cdrsc_name───────┘

►─,NEWALS=adjacent_link_station_name──,OLDALS=adjacent_link_station_name──────►◄
```

Create a dynamic CDRSC and add entry in adjacent link station list:

```
►►──MODIFY procname,ALSLIST──,ACTION=CREATE──,ID=cdrsc_name──────────────────►

►─,NEWALS=adjacent_link_station_name──────────────────────────────────────────►◄
```

Abbreviations

Operand	Abbreviation
MODIFY	F
ACTION=CREATE	ACTION=CRE
ACTION=DELETE	ACTION=DEL
ACTION=REPLACE	ACTION=REP
NEWALS	NEW
OLDALS	OLD

Purpose

The MODIFY ALSLIST (adjacent link station list) command enables you to create or change an entry in the default adjacent link station list for an independent LU. A change to the adjacent link station list affects only sessions established after the change is made. It does not affect active or pending active sessions.

Operands

procname

The procedure name for the command. If *procname* in the START command was specified as *startname.ident*, where *startname* is the VTAM start procedure and *ident* is the optional identifier, either *startname.ident* or *ident* can be specified for *procname*.

If *procname* in the START command was *startname*, *startname* must be specified for *procname*.

ACTION

Specifies whether VTAM is to create a dynamic cross-domain resource, add a PU to the adjacent link station list, delete a PU from the list, or replace a PU currently named in the adjacent link station list with another PU.

ACTION=ADD

Adds a new PU to the adjacent link station list for the already existing independent LU specified. Specify the name of the PU on the NEWALS operand.

Note: You can code NEWALS=ISTAPNPU instead of a real adjacent link station name. ISTAPNPU is a generic representation for any APPN-capable adjacent link station. If VTAM finds ISTAPNPU in the adjacent link station list for an independent LU, VTAM treats ISTAPNPU as if it were any active APPN-capable adjacent link station when trying to determine whether to attempt routing through the APPN network.

ACTION=CREATE

Creates a dynamic cross-domain resource for the independent LU specified on the ID operand. The dynamic cross-domain resource is created only if the independent LU does not already exist. If the independent LU already exists or if it is dynamically created, the adjacent link station list for the independent LU is updated to include the specified adjacent link station (ALS).

If the specified independent LU is dynamic (that is, it was created as a dynamic cross-domain resource and ACTION=ADD or ACTION=CREATE added an ALS to the list, or, ACTION=CREATE created the resource), but the ALS (PU) has DYNLU=NO specified on its definition statement, the ALS will be added to the ALS list but it will not be usable for sessions with the dynamically defined independent LU.

The CDRSCTI start option determines how long the newly created dynamic cross-domain resource can remain without active sessions before it is deleted.

Specify the name of the PU to be created on the NEWALS operand.

ACTION=DELETE

Deletes an existing PU from the adjacent link station list. Specify the name of the PU to be deleted on the OLDALS operand.

Note: You can code OLDALS=ISTAPNPU instead of a real adjacent link station name. ISTAPNPU is a generic representation for any APPN-capable adjacent link station. If VTAM finds ISTAPNPU in the adjacent link station list for an independent LU, VTAM treats ISTAPNPU as if it were any active APPN-capable adjacent link station when trying to determine whether to attempt routing through

the APPN network. This command does **not** delete any real PU names that are APPN-capable; it only deletes the ISTAPNPU entry.

ACTION=REPLACE
Adds a new PU to the adjacent link station list and deletes an existing PU from that list. Specify the name of the PU to be added on the NEWALS operand and the name of the PU to be deleted on the OLDALS operand. Both the NEWALS and the OLDALS operands are required if ACTION=REPLACE.

Note: You can code NEWALS=ISTAPNPU or OLDALS=ISTAPNPU instead of a real adjacent link station name. ISTAPNPU is a generic representation for any APPN-capable adjacent link station. If VTAM finds ISTAPNPU in the adjacent link station list for an independent LU, VTAM treats ISTAPNPU as if it were any APPN-capable adjacent link station when trying to determine whether to attempt routing through the APPN network.

ID Specifies the cross-domain resources that are to be changed.

ID=cdrsc_major_node
Specifies that this command applies to all cross-domain resources that apply to that major node.

ID=cdrsc_name
Specifies that this command applies to the specified cross-domain resource (independent LU) that is to be created or changed. You can specify a network-qualified name for the independent LU.

ID=*
Specifies that this command applies to all cross-domain resources.

NEWALS=adjacent_link_station_name
Specifies the name of the new adjacent link station (PU) for the independent LU specified. You use this operand to add a PU or to identify a new PU that will replace an existing one in the adjacent link station list.

OLDALS=adjacent_link_station_name
Specifies the name of the existing adjacent link station (PU) for the independent LU specified. You use this operand to delete a PU or to identify an existing PU that is to be replaced by another PU in the adjacent link station list.

MODIFY APINGDTP command

```
►►──MODIFY procname,APINGDTP──,INSTANCE=──┬─UNLIMITED─┬──────────────────────►◄
                                          └─value─────┘
```

Purpose

The MODIFY APINGDTP command allows you to change the number of APINGD transaction programs permitted to run concurrently for responding to APING requests from other nodes.

See the *z/OS Communications Server: SNA Network Implementation Guide* for more information on APING.

Operands

procname
The procedure name for the command. If *procname* in the START command was specified as *startname.ident*, where *startname* is the VTAM start procedure and *ident* is the optional identifier, either *startname.ident* or *ident* can be specified for *procname*.

If *procname* in the START command was *startname*, *startname* must be specified for *procname*.

INSTANCE
Specifies the number of APINGD transaction programs permitted to run concurrently for responding to APING requests from other nodes.

INSTANCE=UNLIMITED
Specifies that there is no limit to the number of transaction programs permitted to run concurrently for responding to APING requests from other nodes.

INSTANCE=value
Specifies the number of transaction programs permitted to run concurrently for responding to APING requests from other nodes.

Specifying INSTANCE=0 causes APING requests from other nodes to fail.

MODIFY CDRM command

```
►►──MODIFY procname,CDRM=──┬─new_cdrm──────────────┬──────────────────────────►
                           ├─(new_cdrm)────────────┤
                           └─(new_cdrm,old_cdrm)───┘

                                                  ┌─,TYPE=NORM──────┐
►─,ID=──┬─*──────────────────────┬──────────────┬──┤                 ├──────────────►◄
        ├─cdrsc_major_node_name──┤              └─,TYPE=──┬─IMMED─┬──┘
        └─cdrsc_minor_node_name──┘                        └─NORM──┘
```

Abbreviations

Operand	Abbreviation
MODIFY	F
TYPE=IMMED	IMMED or I or TYPE=I
TYPE=NORM	NORM or N or TYPE=N

Purpose

The MODIFY CDRM (cross-domain resource manager) command tells VTAM which SSCP (CDRM) is the owner of a particular cross-domain resource (CDRSC) or set of CDRSCs. Ongoing sessions of CDRSCs affected by this command are not disrupted. The command changes only the name of the external CDRM responsible for all future session setups with these CDRSCs.

DISPLAY commands issued before a new name takes effect show the old owner CDRM name.

If the cross-domain resource affected by the MODIFY CDRM command was predefined with a CDRM coded on the CDRSC definition statement, the MODIFY CDRM command changes the CDRM that owns the CDRSC for the current and subsequent sessions. If the CDRSC was not predefined with CDRM coded, the change is temporary. After such new or existing sessions terminate, the CDRM is changed back to having no predefined CDRM coded.

Operands

procname
The procedure name for the command. If *procname* in the START command was specified as *startname.ident*, where *startname* is the VTAM start procedure and *ident* is the optional identifier, either *startname.ident* or *ident* can be specified for *procname*.

If *procname* in the START command was *startname*, *startname* must be specified for *procname*.

CDRM
Specifies the new CDRM to be associated with the CDRSCs, and the CDRM that it replaces.

Note: For a CDRM, you can specify a network-qualified name, but this does not remove the restriction that the non-network-qualified CDRM name must be unique across networks.

CDRM=new_cdrm
Specifies the name of the new CDRM to associate with the CDRSCs.

CDRM=(new_cdrm,old_cdrm)
Specifies both the new CDRM to associate with the CDRSCs and the CDRM that was previously associated with the CDRSCs. If *old_cdrm* is specified, only the CDRM names that match this *old cdrm* name are changed.

ID Identifies the CDRSC major or minor node for which the owning CDRM name is to be changed.

ID=cdrsc_major_node_name
Changes the owning CDRM for all CDRSCs in the hierarchy under the major node. The major node name can be specified as a network-qualified name.

ID=cdrsc_minor_node_name
Changes the owning CDRM for only the specified minor node. The minor node name must be specified as a network-qualified name, if the CDRSC represents a real cross network resource.

ID=*
Changes the owning CDRM for all CDRSCs known to VTAM.

TYPE
Indicates whether CDRM takeover occurs without waiting for any sessions that are present to end.

TYPE=IMMED
Indicates that the CDRM is to be changed immediately, regardless of the presence of sessions.

TYPE=NORM
Indicates that the MODIFY CDRM command waits until all sessions have ended before changing the CDRM. If no session exists for a CDRSC affected by the MODIFY CDRM command, the CDRM is changed immediately (as with TYPE=IMMED).

If sessions are active or queued for a specific CDRSC affected by a MODIFY CDRM command, the current owning CDRM remains in effect until all active and queued sessions with the resource have been terminated. At that time, the owning CDRM name is changed and the new CDRM name takes effect.

MODIFY CHKPT command

```
►►──MODIFY procname,CHKPT──┬─────────────────────────┬──────────────────────────────►◄
                           │ ,TYPE=ALL               │
                           │ ,TYPE=──┬─ALL─┬         │
                           │         ├─DIR─┤         │
                           │         └─TOPO─┘         │
```

Abbreviations

Operand	Abbreviation
MODIFY	F

Purpose

The MODIFY CHKPT (checkpoint) command saves a copy of the directory database or the topology database (or both) to a checkpoint data set. During a VTAM recycle, you can restart VTAM with a current list of resources. (VTAM also takes checkpoints during HALT and HALT QUICK processing, but not during HALT CANCEL.) As the checkpoint for each affected data set is completed, a message is issued that indicates whether the checkpoint was successful. The message provides the name of the data set that was updated.

This command is valid only when it is issued at a network node or an interchange node.

When you issue this command for the directory database (TYPE=DIR or TYPE=ALL), VTAM first cleans up the database, then saves it. Cleanup means that dynamic resources that have not been used in some period of time (default 8 days) are deleted from the database. Only dynamic resources that have been the target of a search are then saved. You can change the period of time by using the MODIFY VTAMOPTS command to reset the DIRTIME start option. For more information about the MODIFY VTAMOPTS command, see the “MODIFY VTAMOPTS command” on page 422. For more information about the DIRTIME start option, see the *z/OS Communications Server: SNA Resource Definition Reference*.

When you issue this command for the topology database (TYPE=TOPO or TYPE=ALL) VTAM will save all network topology except end nodes and endpoint TGs.

Operands

procname
The procedure name for the command. If *procname* in the START command was specified as *startname.ident*, where *startname* is the VTAM start procedure and *ident* is the optional identifier, either *startname.ident* or *ident* can be specified for *procname*.

If *procname* in the START command was *startname*, *startname* must be specified for *procname*.

TYPE
Identifies the APPN database to save via a checkpoint.

TYPE=DIR
Writes the directory database to a data set.

TYPE=TOPO
Writes the topology database to a data set.

TYPE=ALL
Writes both the directory database and the topology database to a data set.

MODIFY CNOS command

Set session limits to zero for one logon mode:

```
►►──MODIFY procname,CNOS──,ID=appl_name──,LIMITS=(0,0,0)──────────────────────►

►─,LOGMODE=logon_mode_name──,LUNAME=lu_name──┬─,DRAINL=NO──────────┬──────────►
                                             └─,DRAINL=──┬─NO──┬───┘
                                                         └─YES─┘

►──┬─,DRAINR=NO──────────┬──┬─,NBRMODE=ONE─┬──┬─,RESP=LOCAL──────────┬──────►
   └─,DRAINR=──┬─NO──┬───┘  │              │  └─,RESP=──┬─LOCAL──┬───┘
               └─YES─┘      └──────────────┘            └─REMOTE─┘

►──┬─,SNGSESLU=NO──────────┬──────────────────────────────────────────────►◄
   └─,SNGSESLU=──┬─NO──┬───┘
                 └─YES─┘
```

Set session limits to zero for all logon modes:

```
►►──MODIFY procname,CNOS──,ID=appl_name──,LIMITS=(0,0,0)──,LUNAME=lu_name──────►

►─,NBRMODE=ALL──┬─,DRAINL=NO──────────┬──┬─,DRAINR=NO──────────┬──────────►
                └─,DRAINL=──┬─NO──┬───┘  └─,DRAINR=──┬─NO──┬───┘
                            └─YES─┘                  └─YES─┘

►──┬─,RESP=LOCAL──────────┬──┬─,SNGSESLU=NO──────────┬──────────────────►◄
   └─,RESP=──┬─LOCAL──┬───┘  └─,SNGSESLU=──┬─NO──┬───┘
             └─REMOTE─┘                    └─YES─┘
```

Set session limits to non-zero:

```
►►──MODIFY procname,CNOS──,ID=appl_name──,LIMITS=(sesslim,minwinl,minwinr)──────►

►─,LOGMODE=logon_mode_name──,LUNAME=lu_name──┬──────────────────────────────┬──►
                                             └─,CONVSECL=──┬─NONE────────┬──┘
                                                           ├─CONV────────┤
                                                           ├─ALREADYV────┤
                                                           ├─PERSISTV────┤
                                                           └─AVPV────────┘

►──┬─,NBRMODE=ONE─┬──┬─,RESP=LOCAL──────────┬──┬─,SNGSESLU=NO──────────┬──►◄
   └──────────────┘  └─,RESP=──┬─LOCAL──┬───┘  └─,SNGSESLU=──┬─NO──┬───┘
                               └─REMOTE─┘                    └─YES─┘
```

Use existing session limits:

MODIFY CNOS

```
►►──MODIFY procname,CNOS──,ID=appl_name──,LOGMODE=logon_mode_name──────────────►

                                                   ┌─,NBRMODE=ONE─┐
►─,LUNAME=lu_name──┬──────────────────────────────┴──────────────────────────►
                   └─,CONVSECL=─┬─NONE──────┬
                                ├─CONV──────┤
                                ├─ALREADYV──┤
                                ├─PERSISTV──┤
                                └─AVPV──────┘

  ┌─,SNGSESLU=NO──────┐
►─┴──────────────────────┴──────────────────────────────────────────────────►◄
  └─,SNGSESLU=─┬─NO──┬
               └─YES─┘
```

Abbreviations

Operand	Abbreviation
MODIFY	F
CONVSECL=ALREADYV	CONVSECL=A or CSECL=ALREADYV or CSECL=A
CONVSECL=AVPV	CONVSECL=V or CSECL=AVPV or CSECL=V
CONVSECL=CONV	CONVSECL=C or CSECL=CONV or CSECL=C
CONVSECL=NONE	CONVSECL=N or CSECL=NONE or CSECL=N
CONVSECL=PERSISTV	CONVSECL=P or CSECL=PERSISTV or CSECL=P
DRAINL=NO	DRAINL=N or DRL=NO or DRL=N
DRAINL=YES	DRAINL=Y or DRL=YES or DRL=Y
DRAINR=NO	DRAINR=N or DRR=NO or DRR=N
DRAINR=YES	DRAINR=Y or DRR=YES or DRR=Y
LOGMODE	LOG
LUNAME	LU
NBRMODE=ALL	NBRMODE=A or NBM=ALL or NBM=A
NBRMODE=ONE	NBRMODE=O or NBM=ONE or NBM=O
RESP=LOCAL	RESP=L or RSP=LOCAL or RSP=L
RESP=REMOTE	RESP=R or RSP=REMOTE or RSP=R
SNGSESLU=NO	SNGSESLU=N or SNG=NO or SNG=N
SNGSESLU=YES	SNGSESLU=Y or SNG=YES or SNG=Y

Purpose

The MODIFY CNOS (change number of sessions) command initiates a CNOS transaction with a partner LU for the specified application program.

Using this command, you can modify session limits, request a partner LU to drain its queue of allocation requests, or request a partner LU to be responsible for

deactivating the session. The MODIFY CNOS command does the same thing as the APPCCMD CONTROL=OPRCNTL,QUALIFY=CNOS macro, which is described in the *z/OS Communications Server: SNA Programmer's LU 6.2 Reference*.

Note: For operands that are optional and that do not have a default value, the default values used are obtained from a value already established for the specified LU-mode pair or from the APPL definition of the application specified.

Operands

procname

The procedure name for the command. If *procname* in the START command was specified as *startname.ident*, where *startname* is the VTAM start procedure and *ident* is the optional identifier, either *startname.ident* or *ident* can be specified for *procname*.

If *procname* in the START command was *startname*, *startname* must be specified for *procname*.

CONVSECL

Specifies the conversation security level that the local LU accepts.

The CONVSECL field is used only for a CNOS request that initializes session limits to a non-zero value for a partner LU. Subsequent CNOS requests for the same partner LU ignore this setting.

There are four sources for CONVSECL:

1. Security manager profile
2. CNOS
3. User BIND
4. SECACPT operand on APPL definition statement

The order of this list indicates the selection hierarchy if no security manager profile is provided. If a security manager profile exists, the value in that profile sets the upper limit of conversation-level security that can be specified by the other three sources. If no security manager profile exists, the value in the CNOS takes precedence over any other sources of conversation security level. If no value was specified in the CNOS, and a user BIND is provided, then the value from the BIND is used.

If no conversation-level security value is available in either the CNOS or user BIND, then the default that is used is derived from the SECACPT parameter on the APPL statement.

CONVSECL=NONE

Indicates that the LU does not accept conversation-level security (FMH-5s that include security subfields).

CONVSECL=CONV

Indicates that the LU accepts conversation-level security (FMH-5s that include security subfields).

CONVSECL=ALREADYV

Indicates that the LU accepts conversation-level security (FMH-5s that include security subfields) and that the application program accepts the "already verified" indicator on conversation requests it receives from the partner LU.

CONVSECL=PERSISTV
Indicates that the LU supports conversation-level security (FMH-5s that include security subfields) and accepts the “persistent verification” indicators on conversation requests it receives from the partner LU.

CONVSECL=AVPV
Indicates that the LU supports conversation-level security (FMH-5s that include security subfields) and accepts both the “persistent verification” indicators and the “already verified” indicator on conversation requests it receives from the partner LU.

DRAINL
Specifies whether the source side can drain its allocation requests. This operand is valid only if the session limits are being reset to zero.

DRAINL=YES
Specifies that the source side can drain its allocation requests.

DRAINL=NO
Specifies that the source side cannot drain its allocation requests.

DRAINR
Specifies whether the target side can drain its allocation requests. This operand is valid only if the session limits are being reset to zero.

DRAINR=YES
Specifies that the target side can drain its allocation requests.

DRAINR=NO
Specifies that the target side cannot drain its allocation requests.

ID=appl_name
Specifies the name of the LU 6.2 application program to which the change in the session limit and contention-winner polarity values apply. This value cannot be a network-qualified name.

LIMITS=(sesslim,minwinl,minwinr)
Overrides all other sources of session limits. VTAM performs negotiation if necessary.

sesslim
Specifies the maximum number of parallel sessions between the source side and the target side. It uses the logon mode name specified in the LOGMODE operand. The valid range is 0–32767.

minwinl
Specifies the minimum number of parallel sessions for which the source side is guaranteed to be the contention winner. It uses the logon mode name specified in the LOGMODE operand. The valid range is 0–32767.

minwinr
Specifies the minimum number of parallel sessions for which the partner LU is guaranteed to be the contention winner. It uses the logon mode name specified in the LOGMODE operand. The valid range is 0–32767.

LOGMODE=logon_mode_name
Specifies the name of the logon mode entry for which session limit and polarity values are to be changed. When NBRMODE=ONE is specified or assumed by default, LOGMODE is required. When NBRMODE=ALL is specified, LOGMODE is not needed, and it is ignored if you specify it.

LUNAME=lu_name
Specifies the name of the partner LU to which the change in the session limit

and contention-winner polarity values apply. The name can be a network-qualified name in the form of *netid.luname*.

If *lu_name* is an ACB name, and the ACB name matches the name on the APPL definition statement, then you can use a network-qualified ACB name.

If PARMS=(NQNAMES=NO) is coded on the ACB macro, and a network-qualified name is specified, the network identifier is ignored.

If PARMS=(NQNAMES=YES) is coded on the ACB macro, *luname* **must be a network-qualified name**.

NBRMODE
Specifies whether the setting of the session limit and the contention-winner polarity values applies only for the specified logon mode name or for all logon mode names that apply to the partner LU.

NBRMODE=ONE
Specifies that the session limit and contention-winner polarity values for only the logon mode name specified in the LOGMODE operand are to be set.

NBRMODE=ALL
Specifies that the session limit and contention-winner polarity values for all logon mode names that apply to the partner LU are to be reset to zero, except for SNASVCMG, which remains unchanged. NBRMODE=ALL is valid only when LIMITS=(0,0,0) is specified.

RESP
Specifies which LU is responsible for deactivating the sessions as a result of resetting the session limit or for changing the contention-winner polarity values for parallel session connections.

RESP=LOCAL
Specifies the local LU is responsible for deactivating the sessions as a result of resetting the session limit or changing the contention-winner polarity values for parallel session connections.

RESP=REMOTE
Specifies the remote LU is responsible for deactivating the sessions as a result of resetting the session limit or changing the contention-winner polarity values for parallel session connections.

SNGSESLU
Specifies whether the partner LU is a single-session LU, which does not support parallel sessions. VTAM uses the value specified on this operand to determine the indication of parallel-session support and CNOS support it specifies in the BIND requests. This operand is examined by VTAM only when the partner LU parallel-session capability has not been established.

SNGSESLU=YES
Specifies that the partner LU is a single-session LU which does not support parallel sessions.

SNGSESLU=NO
Specifies that the partner LU supports parallel sessions.

MODIFY COMPRESS command

Change the compression levels set by the APPL definition statement:

```
►►──MODIFY procname,COMPRESS──,ID=appl_name──────────────────────────────►

►┬─,CMPAPPLI=input_limit──────────────────┬──────────────────────────────►◄
 ├─,CMPAPPLO=output_limit─────────────────┤
 └─,CMPAPPLI=input_limit,CMPAPPLO=output_limit─┘
```

Change the compression level set by start option:

```
►►──MODIFY procname,COMPRESS──,CMPVTAM=overall_limit──────────────────────►◄
```

Abbreviations

Operand	Abbreviation
MODIFY	F

Purpose

The MODIFY COMPRESS command allows you to change the value of the data compression levels originally set by the CMPVTAM start option or by an APPL definition statement.

The levels of compression available are in the range 0–4:

0 No compression
1 Run-length encoding (RLE)
2 Small adaptive compression table
3 Medium adaptive compression table
4 Large adaptive compression table

See the *z/OS Communications Server: SNA Network Implementation Guide* for additional information about compression.

Note: You can use the “MODIFY VTAMOPTS command” on page 422 (CMPVTAM operand) to change the compression level set by the start option.

Operands

procname
The procedure name for the command. If *procname* in the START command was specified as *startname.ident*, where *startname* is the VTAM start procedure and *ident* is the optional identifier, either *startname.ident* or *ident* can be specified for *procname*.

If *procname* in the START command was *startname*, *startname* must be specified for *procname*.

CMPAPPLI=input_limit
Specifies the input compression limit for the application. This operand allows compression-level limits for a specific application to be set lower than the overall limit specified by the CMPVTAM start option.

The valid range is 0–4. Zero specifies no compression.

The valid range is 0–1. Zero specifies no compression.

The limit specified by this operand is in effect only during sessions for which the application acts as the PLU and when the limit is lower than that specified by the CMPVTAM start option.

CMPAPPLO=output_limit
Specifies the output compression limit for the application. This operand allows compression-level limits for a specific application to be set lower than the overall limit specified by the CMPVTAM start option.

The valid range is 0–4. Zero specifies no compression.

The valid range is 0–1. Zero specifies no compression.

The limit specified by this operand is in effect only during sessions for which the application acts as the PLU and when the limit is lower than that specified by the CMPVTAM start option.

CMPVTAM=overall_limit
Specifies the overall compression limit for VTAM sessions. The new compression limit takes effect on new sessions that are started after you issue this command. Sessions that were started prior to this command are not changed.

The valid range is 0–4. Zero specifies no compression.

The valid range is 0–1. Zero specifies no compression.

ID=appl_name
Specifies the name of the application to which compression applies. This allows modification of the compression limit for the session as set in the APPL definition statement. The ID operand is required when either CMPAPPLI or CMPAPPLO is specified.

MODIFY CSALIMIT command

```
                                                  ┌─,OPTION=TOTAL──────┐
►►─MODIFY procname,CSALIMIT=─┬─value──────────────┬─┼────────────────────┼──────►◄
                             └─(value─┬─────┬─)─┘ └─,OPTION=─┬─BELOW─┬─┘
                                      └─,F──┘                 └─TOTAL─┘
```

Abbreviations

Operand	Abbreviation
MODIFY	F
OPTION=BELOW	OPT=BELOW
OPTION=TOTAL	OPT=TOTAL

Purpose

The MODIFY CSALIMIT command allows you to dynamically change the amount of common service area (CSA) storage that VTAM is allowed to use.

Notes:

1. You can use the “MODIFY VTAMOPTS command” on page 422 (CSALIMIT and CSA24 operands) to perform the same function as this command. Use CSALIMIT for OPTION=TOTAL and CSA24 for OPTION=BELOW.
2. MODIFY CSALIMIT may not function if VTAM’s available CSA is exhausted to the point that the LPBUF buffer pool cannot expand.
3. Unless CSA24 is specifically indicated, all references to CSA mean CSA plus ECSA.

Operands

procname

The procedure name for the command. If *procname* in the START command was specified as *startname.ident*, where *startname* is the VTAM start procedure and *ident* is the optional identifier, either *startname.ident* or *ident* can be specified for *procname*.

If *procname* in the START command was *startname*, *startname* must be specified for *procname*.

CSALIMIT

Specifies the maximum amount of common service area (CSA) storage to be used by VTAM (value) and whether VTAM is to be forced to use that value (F). The actual amount of storage used by VTAM for the CSA can be less than or equal to the CSALIMIT. Use the “DISPLAY BFRUSE command” on page 40 to display the current CSALIMIT setting, VTAM CSA usage, system CSA limit, and system CSA storage remaining.

CSALIMIT=value

Specifies the maximum amount of CSA storage to be used by VTAM. The *value* operand can be specified in any of the following forms:

0 When OPTION=BELOW, specifies that no limit is enforced on the amount of CSA used by VTAM. When OPTION=TOTAL, specifies the

maximum amount of CSA used by VTAM is to be set to the system CSA limit. To find out what the system CSA limit is for your system, use the DISPLAY BFRUSE command.

n or nK

n is a decimal integer that specifies VTAM's CSA usage limit in units of K (1024 bytes). For example, if CSALIMIT=4 or CSALIMIT=4K is specified, a CSA limit of 4096 is assigned. The maximum *value* that can be specified is 2097152K bytes.

If the value specified for *n* is not a multiple of 4, it is rounded to the next page-size multiple (4K bytes).

Notes:

1. If the number you code is greater than the system CSA limit (of all CSA + ECSA defined in the system) CSALIMIT is set to 90% of the system CSA limit (which is the default). If the value specified is less than 25 MB and the ,F modifier is used on the command, a message will be issued. Refer to the DISPLAY BFRUSE command for information on displaying the current CSALIMIT setting, VTAM CSA usage, system CSA limit, and available system CSA.
2. If CSALIMIT is specified (but without the ,F modifier) and VTAM CSA usage reaches this specified CSALIMIT value with 25% or more of system CSA storage remaining available for use, a warning message will be issued. VTAM will continue to execute until only 25% of CSA storage remains available for use. If you wish to prevent VTAM from using additional CSA beyond the specified CSALIMIT value, issue a MODIFY CSALIMIT or MODIFY VTAMOPTS,CSALIMIT command with the desired CSALIMIT value and the ,F operand specified.
3. If the number specified is greater than the available CSA, no limit is enforced.

qM

q is a decimal integer that specifies VTAM's CSA usage limit in units of M (1048576 bytes, or 1024K bytes). For example, if CSALIMIT=4M is specified, a CSA limit of 4194304 bytes is assigned. The maximum *value* that can be specified is 2048M.

Note: If the number specified is greater than the available CSA, no limit is enforced.

CSALIMIT=(*value*,F)

Forces the specified value, *n*, *n*K, or *q*M, to be used as the CSA usage limit, regardless of how much CSA storage is currently allocated to VTAM. If VTAM's current CSA value is greater than a newly specified CSALIMIT value, all subsequent CSA requests by VTAM components are rejected until the current CSA value falls below the CSALIMIT value.

If F is not specified, and the operator has specified a limit smaller than the amount of CSA storage currently allocated to VTAM, a request to change the CSA limit will be allowed if there is more than 25% of the system CSA storage available for use. If F is specified, the request to change the CSA will be successful but VTAM will not use more CSA than the CSALIMIT specified.

Attention: If a CSA limit is specified that is too low and the operator forces this limit to take effect (by using F), the operator is prevented from using VTAM commands until the CSA usage falls below the specified limit,

because CSA storage is needed to process all VTAM operator commands except HALT CANCEL. If the CSA usage does not fall below the specified CSA limit, VTAM must be canceled and restarted with a more appropriate CSALIMIT value specified.

OPTION
Specifies the area to be limited.

OPTION=TOTAL
Designates the maximum amount of 24-bit or 31-bit addressable CSA storage VTAM can use.

OPTION=BELOW
Specifies that the MODIFY CSALIMIT command designates the maximum amount of 24-bit addressable storage VTAM can use. OPTION=BELOW corresponds to the CSA24 start option.

Note: OPTION=BELOW limits only the amount of explicitly requested 24-bit addressable storage (for example, GETMAIN LOC=BELOW). If VTAM is not specific about the location of the storage desired (for example, GETMAIN LOC=ANY), and the operating system returns 24-bit addressable storage, that storage is not subject to OPTION=BELOW limitations. Instead, it is treated as 31-bit addressable storage in DISPLAY command output.

MODIFY CSDUMP command

```
►►─MODIFY procname,CSDUMP──┬──────────────────────────────────────┬──────────►
                           └─,SENSE=sense_code──┬──────────────┬──┘
                                                └─,RU=ru_code──┘

►──┬──────────────────────────────────────────────────────────────────────────┬──►
   └─,MESSAGE=──┬─message_id_number──────────────────────────────┬──┘
                └─(message_id_number,message_value_field)─┘

►──┬──────────────────────────┬──────────────────────────────────────────────►◄
   └─,MATCHLIM=matchlim_value─┘
```

Abbreviations

Operand	Abbreviation
MODIFY	F

Purpose

The MODIFY CSDUMP command allows the user to do three things:

- The default action, which occurs when no operands are specified, allows the user to immediately dump the current address space and VIT data space.
- Allows the user to setup a trigger that will invoke a dump of the current address space and VIT data space when a particular sense code is issued.
- Allows the user to setup a trigger that will invoke a dump of the current address space and VIT data space when a particular message is issued.

The user can have only one sense code, and one message trigger set simultaneously. Therefore, the user can not have two different message or sense code triggers set at the same time. If the user enters a message trigger, and then enters a different message trigger, the first message trigger will be overwritten.

Operands

procname
The procedure name for the command. If *procname* in the START command was specified as *startname.ident*, where *startname* is the VTAM start procedure and *ident* is the optional identifier, either *startname.ident* or *ident* can be specified for *procname*.

If *procname* in the START command was *startname*, *startname* must be specified for *procname*.

MATCHLIM=matchlim_value
Specifies that a dump should be taken the first time the matchlim_value trigger is hit. The matchlim_value is an integer in the range 1-65535.

MESSAGE=message_id_number
Specifies the ID number of the message that will trigger a dump. Message numbers must be of the format ISTxxxI, ISTxxxxI, IVTxxxI, or IVTxxxxI.

MESSAGE=(message_id_number,message_value_field)
This parameter specifies the message variable text that can be used to trigger a dump as well. Instead of just matching on a message number, this allows the trigger to be more specific. If variable text is specified, then a dump will be

taken only if the message and variable text match. If a variable text field is left blank, then it is considered a wild card. Refer to *z/OS Communications Server: SNA Messages* to determine the number of variable text fields.

Note: Use an underscore as a substitute for a space in the variable text value of the message operand.

RU=ru_code
Specifies the response unit code that will carry the sense code specified. The RU operand can only be used in combination with the SENSE operand. If the RU operand is used, then the dump will only be triggered if the RU and SENSE codes occur together. The RU code must be 2, 4, or 6 characters in length.

SENSE=sense_code
Specifies the sense code that will trigger a dump. It must be 8 characters in length.

MODIFY CSM command

```
►►──MODIFY procname,CSM──┬──────────────────┬──┬──────────────────┬──────────────►◄
                         └─,ECSA=maxecsa────┘  └─,FIXED=maxfix────┘
```

Abbreviations

Operand	Abbreviation
MODIFY	F

Purpose

The MODIFY CSM command is used to dynamically change the amount of storage used by the communications storage manager (CSM). It can also be used to activate changes made to the CSM parmlib member without requiring an IPL.

- To temporarily change the amount of storage used by CSM, issue this command and specify the parameters you want to change on the ECSA and FIXED operands.
- To permanently change the amount of storage used by CSM or tuning parameters for CSM buffer pools, edit the CSM parmlib member and issue this command without specifying any operands.

Note: Changing a parameter that decreases the specification of a limit may not take effect immediately. Reducing the usage of the resource to comply to the new limit may require users to free buffers to contract a storage pool's size. This type of change could also result in a CSM constraint condition being indicated to users that are monitoring CSM resource usage.

For more information about the CSM parmlib member, see the *z/OS Communications Server: SNA Migration* .

Operands

procname
The procedure name for the command. If *procname* in the START command was specified as *startname.ident*, where *startname* is the VTAM start procedure and *ident* is the optional identifier, either *startname.ident* or *ident* can be specified for *procname*.

If *procname* in the START command was *startname*, *startname* must be specified for *procname*.

ECSA=maxecsa
Specifies the maximum number of bytes of ECSA storage to be dedicated for use by CSM. *maxecsa* is a decimal integer and must be specified in either kilobytes (K) or megabytes (M) ranging from 1024K to 2048M.

FIXED=maxfix
Specifies the maximum number of bytes of fixed storage to be dedicated for use by CSM. *maxfix* is a decimal integer and must be specified in either kilobytes (K) or megabytes (M) ranging from 1024K to 30720M.

MODIFY DEFAULTS command

Modify the DLOGMOD value for a resource:

```
►►──MODIFY procname,DEFAULTS──,ID=resource_name──,DLOGMOD=──┬──────────────────────┬──►◄
                                                            └─logon_mode_name──────┘
```

Change the delay timer for disconnection of a switched PU:

```
►►──MODIFY procname,DEFAULTS──,ID=resource_name──,DISCNTIM=time_period──────────►◄
```

Abbreviations

Operand	Abbreviation
MODIFY	F
DLOGMOD	DLOG

Purpose

The MODIFY DEFAULTS command allows you to change the current value of the DLOGMOD operand of a definition statement for an LU, application program, or cross-domain resource without deactivating the entire major node.

The MODIFY DEFAULTS command also allows you to change the delay timer for disconnection of a switched PU.

When VTAM receives the MODIFY DEFAULTS command, it overlays the existing value for the specified operand with the new value.

Notes:

1. If you use the MODIFY DEFAULTS command to change the DLOGMOD specification, be aware that later use of a VARY ACT,UPDATE=ALL command for dynamic reconfiguration can undo the effects of the MODIFY DEFAULTS command. This is because the DLOGMOD value in the definition file overrides the value that was established with the MODIFY DEFAULTS command. Even if no DLOGMOD is coded in the definition file, VTAM assumes a null value for DLOGMOD and the null value overrides the MODIFY DEFAULTS value. To prevent the new DLOGMOD specification from being deleted unintentionally, code the DLOGMOD definition statement with the desired value.
2. You can use the MODIFY RESOURCE command to perform the same function as this command.

Operands

procname

The procedure name for the command. If *procname* in the START command was specified as *startname.ident*, where *startname* is the VTAM start procedure and *ident* is the optional identifier, either *startname.ident* or *ident* can be specified for *procname*.

If *procname* in the START command was *startname*, *startname* must be specified for *procname*.

DISCNTIM=time_period
Specifies the amount of time that VTAM delays deactivation of the SSCP-PU session when there are no outstanding LU-LU session requests.

You can specify the time in seconds (S). Specify the number of seconds as an integer in the range 5–65535.

DISCNTIM is valid only for PU types 2 and 2.1 that have DISCNT=DELAY specified on the PU definition statement.

DLOGMOD=logon_mode_name
Specifies the new value for the logon mode. If DLOGMOD is specified with a null value (left blank), the predefined DLOGMOD value is deleted.

Note: If DLOGMOD is specified with an unknown logon mode, a warning message is issued indicating that it is unknown and the change is accepted.

ID=resource_name
Specifies the name of the resource to which the command applies. The name can be a network-qualified name. If the name specified on the ID operand is network-qualified, this name is considered to be the real name of the resource.

Note: If the resource name is a cross-network CDRSC which is defined with NQNMODE=NQNAME (either by definition statement or start option), be sure to use its network-qualified name on this command.

MODIFY DEFINE command

Set session limits to zero:

```
►►─MODIFY procname,DEFINE──,ID=appl_name──,DLIMITS=(0,0,0)──────────────────►

►─,LOGMODE=logon_mode_name──,LUNAME=lu_name──────────────────────────────────►

                                          ┌─,DELETE=NALLOW──┐
►──┬──────────────────────────────────┬──┴─────────────────┴──────────────────►
   └─,AUTOSES=number_of_winner_sessions─┘  └─,DELETE=──┬─ALLOW──┬─┘
                                                       └─NALLOW─┘

►──┬──────────────────────────┬──┬──────────────────────────┬──────────────►◄
   └─,DDRAINL=──┬─ALLOW──┬─┘  └─,DRESPL=──┬─ALLOW──┬─┘
                └─NALLOW─┘                └─NALLOW─┘
```

Set session limits to nonzero:

```
►►─MODIFY procname,DEFINE──,ID=appl_name──────────────────────────────────────►

►─,DLIMITS=(dseslim,dminwinl,dminwinr)──,LOGMODE=logon_mode_name──────────────►

►─,LUNAME=lu_name──┬──────────────────────────────────────────────────────────►
                   └─,AUTOSES=number_of_winner_sessions─┘

   ┌─,DELETE=NALLOW──┐
►──┴─────────────────┴──┬──────────────────────────┬──────────────────────►◄
   └─,DELETE=──┬─ALLOW──┬─┘  └─,DRESPL=──┬─ALLOW──┬─┘
               └─NALLOW─┘                └─NALLOW─┘
```

Use existing session limits:

```
►►─MODIFY procname,DEFINE──,ID=appl_name──,LOGMODE=logon_mode_name──────────►

►─,LUNAME=lu_name──┬──────────────────────────────────────────────────────────►
                   └─,AUTOSES=number_of_winner_sessions─┘

   ┌─,DELETE=NALLOW──┐
►──┴─────────────────┴──┬──────────────────────────┬──────────────────────►◄
   └─,DELETE=──┬─ALLOW──┬─┘  └─,DRESPL=──┬─ALLOW──┬─┘
               └─NALLOW─┘                └─NALLOW─┘
```

Delete an unusable LU-mode entry:

```
►►─MODIFY procname,DEFINE──,ID=appl_name──,LUNAME=lu_name──,DELETE=UNUSE──────►◄
```

Abbreviations

Operand	Abbreviation
MODIFY	F
AUTOSES	AUTO
DELETE=ALLOW	DELETE=A or DEL=ALLOW or DEL=A
DELETE=NALLOW	DELETE=N or DEL=NALLOW or DEL=N
DELETE=UNUSE	DELETE=U or DEL=UNUSE or DEL=U
DDRAINL=ALLOW	DDRAINL=A or DDRL=ALLOW or DDRL=A
DDRAINL=NALLOW	DDRAINL=N or DDRL=NALLOW or DDRL=N
DRESPL=ALLOW	DRESPL=A or DRSP=ALLOW or DRSP=A
DRESPL=NALLOW	DRESPL=N or DRSP=NALLOW or DRSP=N
LOGMODE	LOG
LUNAME	LU

Purpose

The MODIFY DEFINE command establishes new entries, modifies existing entries, or deletes unusable entries in the LU-mode table for the specified application program. The DEFINE values stored in the LU-mode table are used when VTAM processes a CNOS transaction originated by the partner LU or when a CNOS request is issued from the application program (local LU) without a CNOS structure.

When VTAM receives the MODIFY DEFINE command, it overlays the existing entry with the values specified.

Note: For operands that are optional and that do not have a default value, the default values used are obtained from a value already established for the specified LU-mode pair or from the APPL definition statement of the application program specified.

Operands

procname
The procedure name for the command. If *procname* in the START command was specified as *startname.ident*, where *startname* is the VTAM start procedure and *ident* is the optional identifier, either *startname.ident* or *ident* can be specified for *procname*.

If *procname* in the START command was *startname*, *startname* must be specified for *procname*.

AUTOSES=number_of_winner_sessions
Specifies the number of contention-winner sessions to activate automatically, rather than by allocation requests from the application program. The valid range is 0–32767. If AUTOSES is not coded on the APPL statement, the default is zero.

DDRAINL
Specifies whether the source side can drain its allocation requests when the application program is a target of a CNOS request that resets the session limits to zero. This operand is valid only if the session limits are being reset to zero.

DDRAINL=ALLOW
Specifies that the application program is allowed to drain its allocation requests when the application program is the target of a CNOS request that resets the session limits to zero.

DDRAINL=NALLOW
Specifies that the application program is not allowed to drain its allocation requests.

DELETE
Specifies whether a mode name entry can be deleted from the LU-mode table.

DELETE=ALLOW
Specifies that a mode name entry can be deleted from the LU-mode table.

DELETE=NALLOW
Specifies that a mode name entry cannot be deleted from the LU-mode table.

DELETE=UNUSE
Specifies that an unusable mode name entry is to be deleted from the LU-mode table.

Note: DELETE=UNUSE is valid only for applications programs defined with OPERCNOS=ALLOW and APPC=YES on the APPL definition statement in the application program major node.

DLIMITS=(dseslim,dminwinl,dminwinr)
Specifies the negotiation limits that are allowed between the source side and target side. If DLIMITS is not coded on the APPL statement, the default is (2,1,1).

dseslim
Specifies the maximum number of sessions between the source side and the target side. This number applies uniquely to each logon mode name for which sessions can be established with a partner LU. The valid range is 0–32767.

dminwinl
Specifies the minimum number of parallel sessions for which the source side is guaranteed to be the contention winner. This number applies uniquely to each logon mode name for which sessions can be established with a partner LU. The valid range is 0–32767.

dminwinr
Specifies the minimum number of parallel sessions for which the partner LU is guaranteed to be the contention winner. This number applies uniquely to each logon mode name for which sessions might be established with a partner LU. The valid range is 0–32767.

DRESPL
Specifies whether the LU is allowed to assume responsibility for deactivating sessions if a CNOS request is received identifying the LU as the responsible LU.

DRESPL=ALLOW
Specifies that VTAM accepts a CNOS request specifying that the LU is responsible for deactivating sessions.

DRESPL=NALLOW
Specifies that VTAM does not accept a CNOS request specifying that the LU is responsible for deactivating sessions.

ID=appl_name
Specifies the name of the LU 6.2 application program to which the command applies. *appl_name* cannot be a network-qualified name.

LOGMODE=logon_mode_name
Specifies the name of the logon mode entry for which session limit and contention-winner polarity values are to be changed. The SNASVCMG LOGMODE name is not allowed in the operand. The SNASVCMG LOGMODE is managed internally by VTAM.

LUNAME=lu_name
Specifies the name of the partner LU to which the change in the session limit and contention-winner polarity values apply. The name can be a network-qualified name in the form of *netid.luname*.

If *lu_name* is an ACB name, and the ACB name matches the name on the APPL definition statement, then you can use a network-qualified ACB name.

If PARMS=(NQNAMES=NO) is coded on the ACB macro, and a network-qualified name is specified, the network identifier is ignored.

If PARMS=(NQNAMES=YES) is coded on the ACB macro, *luname* **must** be a network-qualified name.

MODIFY DIRECTRY command

Change the ownership of APPN® resources in the directory database:

```
►►──MODIFY procname,DIRECTRY──,FUNCTION=UPDATE──,ID=──┬─cdrsc_major_node_name─┬──►
                                                      └─resource_name─────────┘

►──┬──,CPNAME=──┬─new_cp_name──────────────┬──────────────────────────────────────►◄
   │            └─(new_cp_name,old_cp_name)┘                                      │
   ├──,NETSRVR=server_name──────────────────────────────────────────────────────────┤
   └──,CPNAME=──┬─new_cp_name──────────────┬──,NETSRVR=server_name──────────────────┘
                └─(new_cp_name,old_cp_name)┘
```

Delete a resource from the directory database:

```
►►──MODIFY procname,DIRECTRY──,FUNCTION=DELETE──,ID=──┬─cdrsc_major_node_name─┬──►◄
                                                      └─resource_name─────────┘
```

Abbreviations

Operand	Abbreviation
MODIFY	F
FUNCTION=DELETE	DELETE
FUNCTION=UPDATE	UPDATE

Purpose

The MODIFY DIRECTRY (directory) command performs the following functions for the directory database:

- Changes the ownership of APPN resources in the directory database. Logical units are owned by control points. (Both end nodes and network nodes can be control points.) End nodes are owned or served by network nodes. You can specify a new end node or network node as the owner of a logical unit, or you can specify a new network node as the owner of an end node. You can even specify a new end node as the owner of an LU and a new network node as the owner of that end node on a single command, in which case all of the logical units under the end node also are associated with the new network node.

  The information in the directory database is updated automatically when VTAM receives new information about a resource. For example, if you specify a new end node as the owner of an LU, and then VTAM finds that the LU has moved to a different location, the database is updated with the LU's new location.

  Note: If you change the network node server for an LU, all the other LUs under the same end node will also have their network node server changed.

  You cannot change the resource type with this command. For example, you cannot turn a network node into an end node. If the resource specified by CPNAME or NETSRVR has a resource type that conflicts with the resource specified by ID, the update fails and an error message is issued.

The CPNAME and NETSRVR operands can specify the same resource name. For example, a logical unit can be owned by a network node, in which case the network node serves as both the control point and the network node server for the logical unit.

- Deletes resources from the directory database.

This command has no effect on corresponding CDRSC major nodes or minor nodes that have the same name as the resource specified by the ID operand. That is, the directory representation of the resource is changed, but the subarea representation of the resource is not changed.

This command is valid only when it is issued at a network node or an interchange node.

Operands

procname
The procedure name for the command. If *procname* in the START command was specified as *startname.ident*, where *startname* is the VTAM start procedure and *ident* is the optional identifier, either *startname.ident* or *ident* can be specified for *procname*.

If *procname* in the START command was *startname*, *startname* must be specified for *procname*.

CPNAME
Specifies the new owning control point for the resource or resources named in the ID operand and the old owner that it replaces. The CPNAME operand is valid only when FUNCTION=UPDATE is specified. The owning CP can be either a network node or an end node.

You can specify network-qualified names on the CPNAME operand. If you do not, the host's network ID will be used as the network qualifier.

CPNAME=new_cp_name
Specifies the name of the new control point that owns the resources.

CPNAME=(new_cp_name,old_cp_name)
Specifies the name of the control point that previously owned the resources, as well as the new owning control point. If *old_cp_name* is specified, only those resources whose owning control point matches *old_cp_name* are changed. If *old_cp_name* is not specified, the owning control point name for the specified resources is changed to *new_cp_name*, regardless of the previous value.

FUNCTION
Specifies the function to be performed by this command. The FUNCTION operand is required.

FUNCTION=UPDATE
Updates the database to reflect a new owning end node (CPNAME), or network node (NETSRVR), or both for the resource named in the ID operand.

FUNCTION=DELETE
Deletes the resource named in the ID operand from the directory database. If ID specifies the name of a CDRSC major node, this command deletes the directory representation of each minor node that was predefined with a CPNAME in the major node.

ID=resource_name

Specifies the name of the resource (either an individual APPN resource or a CDRSC major node) that is to be updated or deleted.

The name specified on CPNAME or NETSRVR cannot match the name specified on ID, unless ID is a major node. If ID is a major node, then the name specfied for ID can match the name specified for CPNAME or NETSRVR; however, if there is a minor node with the same name as the major node, the update will fail for that minor node.

If the resource specified on the ID operand is not found in the database, an error message is issued.

You can specify a network-qualified name on the ID operand. If you do not, the host's network ID is used as the network qualifier.

ID=cdrsc_major_node_name

If the resource is a CDRSC major node, this command affects the directory representation of each minor node that was predefined with a CPNAME in the major node. For example, you could enter:

```
F procname,DIRECTRY,UPDATE,ID=CDRSC2A,CPNAME=SSCP2A
```

where CDRSC2A is the name of a CDRSC major node which contains several resources that are now owned by control point SSCP2A.

NETSRVR=server_name

Specifies the new network node server for the resource or resources named in the ID operand. The NETSRVR operand is valid only when FUNCTION=UPDATE is specified.

You can specify a network-qualified name on the NETSRVR operand. If you do not, the host's network ID is used as the network qualifier.

MODIFY DR command

Delete a logical unit from a physical unit, or a physical unit from a line:

```
►►──MODIFY procname,DR──,TYPE=DELETE──┬─,ID=lu_name,FROM=pu_name──┬──────────►◄
                                      └─,ID=pu_name,FROM=line_name┘
```

Move a physical unit:

```
►►──MODIFY procname,DR──,TYPE=MOVE──,ID=pu_name──,FROM=line_name──────────────►

►─,TO=line_name──┬─,ACTIVATE=NO──────┬──┬──────────────────────────────────┬──►◄
                 └─,ACTIVATE=──┬─NO─┬─┘  └─,ADDR=link_station_address──────┘
                               └─YES┘
```

Abbreviations

Operand	Abbreviation
MODIFY	F
ACTIVATE=NO	ACT=NO
ACTIVATE=YES	ACT=YES

Purpose

The MODIFY DR (dynamic reconfiguration) command dynamically reconfigures an NCP or a local peripheral node. You can use this command to delete or move type 1, 2, and 2.1 PUs along with their associated LUs, or to delete LUs.

See the *z/OS Communications Server: SNA Network Implementation Guide* for information about dynamically reconfiguring VTAM peripheral nodes and for information about dynamic NCP reconfiguration.

The MODIFY DR command cannot dynamically add a physical unit or logical unit. To add a physical or logical unit, use the VARY DRDS command with a DR file or use the VARY ACT command with the UPDATE operand. Note that you can also use the VARY DRDS command or the VARY ACT command with the UPDATE operand to perform the same functions as the MODIFY DR command.

Note: See the “MODIFY ALSLIST command” on page 279 for information about how to update the list of PUs (adjacent link stations) associated with an independent LU.

Dynamic reconfiguration for an NCP:

For an NCP, this command performs the following functions without regenerating the NCP:
- Moves a nonswitched PU and its subordinate LUs from one line to another
- Changes a nonswitched PU link station address
- Deletes a nonswitched PU and its subordinate LUs from a line
- Deletes an LU from a nonswitched PU
- Deletes a type 2.1 PU on an NCP ESCON® channel

- Deletes an independent LU on an NCP ESCON channel
- Deletes frame relay type 1 PUs

An NCP must be active and must be capable of dynamic reconfiguration before it can be dynamically reconfigured. The active and inactive requirements for the reconfiguration operations are shown in Table 3 and Table 4 on page 311.

Table 3. Active and inactive status requirements for MODIFY DR for an NCP

Operation/ resource	Major node	LINE	PU	LU
Delete PU	Active	Either	Inactive	Inactive
Delete LU	Active	Either	Either	Inactive
Move PU	Active	Either	Inactive	Inactive

In order to modify a frame relay switching equipment set (FRSESET), you need to know whether the FRSESET was statically or dynamically defined. If you are not sure, you can issue a DISPLAY NET,ID=*frseset_name* command to find out. Statically means that the FRSESET was included in the NCP generation. Dynamically means that the FRSESET was not included in the NCP generation. Statically and dynamically defined PUs cannot be specified in the same FRSESET; the PUs must be all static or all dynamic.

If the FRSESET was dynamically defined, you can dynamically add and delete PUs from the set. You can delete PUs with the MODIFY DR, VARY DRDS, or VARY ACT,UPDATE=ALL commands. You can add PUs only with the VARY ACT,UPDATE=ADD or VARY ACT,UPDATE=ALL command.

If the FRSESET was statically defined, you can delete PUs from the set, but you cannot add PUs. In practical terms, this means you need to delete the entire FRSESET and then add it back dynamically in order to make changes. For example, if you have a statically defined FRSESET containing two primary PUs and you want to add two backup PUs, follow these steps:

1. Delete the two primary PUs, thereby deleting the FRSESET itself (because it is empty).
2. Edit the VTAMLST source file to add the PU definitions for the backup PUs and add the backup PUs to the FRSESET.
3. Use the VARY ACT command with UPDATE=ADD or UPDATE=ALL. The VARY ACT command causes the FRSESET to be dynamically defined.

If you delete one or more PUs (using MODIFY DR or VARY DRDS) from a statically defined FRSESET without deleting the whole FRSESET, VARY ACT will cause the deleted PUs to be added back, but they will not be part of the FRSESET.

The first PU under a frame relay line (the LMI) cannot be deleted and it cannot be part of a FRSESET.

For more information on how to define frame relay lines, frame relay PUs, and FRSESETs, see the *z/OS Communications Server: SNA Resource Definition Reference*.

Dynamic reconfiguration for local peripheral nodes:

For a VTAM local peripheral node, this command performs the following functions:

- Deletes a logical unit from a VTAM nonswitched peripheral node. This is possible only for local SNA major nodes. The MODIFY DR command cannot move resources in a VTAM peripheral node, and it cannot delete physical units or lines in a VTAM peripheral node.
- Removes a PU from an independent LU's adjacent link station list.

Note: You cannot use MODIFY DR to move an independent LU.

Table 4. Active and inactive status requirements for MODIFY DR for local peripheral nodes

Operation/ resource	Major node	LINE	PU	LU
Delete LU	N/A	Either	Either	Inactive

Operands

procname

The procedure name for the command. If *procname* in the START command was specified as *startname.ident*, where *startname* is the VTAM start procedure and *ident* is the optional identifier, either *startname.ident* or *ident* can be specified for *procname*.

If *procname* in the START command was *startname*, *startname* must be specified for *procname*.

ACTIVATE

Applies only if TYPE=MOVE. It specifies whether the physical unit and its associated logical units are activated automatically after a successful move.

ACTIVATE=YES

VTAM activates the physical unit and its associated logical units after the move completes successfully. This is equivalent to entering VARY ACT,ID=*pu_name*,SCOPE=ONLY after the MODIFY DR,ID=*pu_name*,TYPE=MOVE command has successfully completed.

Notes:

1. If the line to which the PU is being moved is inactive before the move, ACTIVATE=YES does not activate the line.
2. If the system programmer has defined the initial status of a logical unit subordinate to the moved physical unit (ISTATUS) as inactive, ACTIVATE=YES does not activate the logical unit. The logical unit must be explicitly activated.
3. If the line to which the PU is being moved is active, and the PU's ISTATUS is active, the PU and associated LUs are activated even if ACTIVATE=YES is not specified.

ACTIVATE=NO

VTAM does not activate the physical unit and its associated logical units after the move completes.

ADDR=link_station_address

Applies only if TYPE=MOVE. It specifies the physical unit's link station address. Using this operand, you can change the physical unit's link station address.

To change the address, use both the TO and FROM operands. The address value must be a 2-digit hexadecimal number that is unique for each physical unit on the same line.

You can use the ADDR operand to change a physical unit's SDLC link station address regardless of whether the physical unit is being moved to a new line. (It is acceptable to code the same line on the TO and FROM operands associated with a TYPE=MOVE command.)

If you use the ADDR operand to assign link station addresses, be careful when using an address that a resource previously used. NCP is not informed of dynamic moves or additions until the resource is activated; therefore, activate resources in the order in which the dynamic reconfiguration requests were made.

FROM
Specifies the line name or physical unit in the dynamic reconfiguration.

FROM=line_name
If TYPE=MOVE, identifies the line from which the physical unit and its subordinate LUs are to be moved.

If TYPE=DELETE, identifies the name of the line from which the physical unit and all associated logical units are to be deleted.

The line must be nonswitched. The line can be active or inactive.

FROM=pu_name
Identifies the physical unit from which the logical units identified in the ID operand are to be deleted. The physical unit must be nonswitched.

If ID specifies an independent logical unit, the logical unit must not have any session over the physical unit (adjacent link station) named in the FROM operand.

ID Specifies the physical unit or logical unit in the dynamic reconfiguration. When TYPE=DELETE is specified, the name can be a network-qualified name.

ID=pu_name
Identifies the physical unit to be deleted or moved (as specified in the TYPE operand) and its associated logical units. The physical unit must be inactive and nonswitched.

ID=lu_name
Applies only if TYPE=DELETE. It identifies the logical unit to be deleted. The logical unit must be inactive and under a nonswitched physical unit. If the specified logical unit is an independent LU, it must not have any session over the physical unit (adjacent link station) specified in the FROM operand.

TO=line_name
Applies only if TYPE=MOVE. It identifies the line to which the physical unit and its associated logical units are to be moved. The line must be attached to the same NCP as the physical unit and be nonswitched. The line can be active or inactive.

This operand is required with TYPE=MOVE.

TYPE
Specifies the type of dynamic reconfiguration to be performed.

The MODIFY DR command is valid only for nonswitched PUs and LUs and type 2.1 PUs on ESCON channels. MODIFY DR is not supported for cross-domain resources. You cannot move or delete a PU that has PUDR=NO coded in its NCP definition, and you cannot delete a dependent LU that has LUDR=NO coded in its NCP definition.

The MODIFY DR command can be used to delete PUs from an independent LU's adjacent link station list if the independent LU has no active sessions over the PU; however, the MODIFY ALSLIST command is recommended for adding and deleting PUs from an adjacent link station list.

TYPE=MOVE
Moves the physical unit identified in the ID operand, and all logical units associated with the physical unit, from the line identified in the FROM operand to the line identified in the TO operand. You can move a physical unit from one line to another only if both lines are attached to the same NCP.

TYPE=DELETE
Deletes the physical unit identified in the ID operand and all logical units associated with the physical unit from the line identified in the FROM operand, or deletes the logical unit identified in the ID operand from its physical unit identified in the FROM operand.

MODIFY DUMP command

Static dump of remote NCP (via link station) to host:

```
►►─MODIFY procname,DUMP──,ID=link_station_name──,DUMPDS=name──────────────────►

  ┌─,ACTION=COMP─┐  ┌─,OPTION=STATIC─┐  ┌─,RMPO=NO──────┐  ┌─,TYPE=NCP─┐
►─┼──────────────┼──┼────────────────┼──┼───────────────┼──┼───────────┼──────►◄
  │              │  │                │  │ ┌─NO──┐       │  │           │
  │              │  │                │  └─,RMPO=─┼─────┼──┘  │           │
  │              │  │                │          └─YES─┘      │           │
```

Static dump of NCP to host:

```
                                   ┌─,ACTION=COMP─┐
►►─MODIFY procname,DUMP──,ID=ncp_name──────────────┼──────────────────────────►
                                   │              └─,DUMPDS=name─┘
                                   ┌─,OPTION=STATIC─┐  ┌─,RMPO=NO──────┐
►──────────────────────────────────┼────────────────┼──┼───────────────┼──────►
  └─,DUMPSTA=──┬──────────────────┘                │  │ ┌─NO──┐       │
               └─link_station_name─┘                └─,RMPO=─┼─────┼──┘
                                                           └─YES─┘

  ┌─,TYPE=NCP─┐
►─┼───────────┼──────────────────────────────────────────────────────────────►◄
  │           │
```

Static dump of NCP to hard disk:

```
                                                   ┌─,OPTION=STATIC─┐
►►─MODIFY procname,DUMP──,ID=ncp_name──,ACTION=STORE──────────────┼──────────►◄
```

Dynamic dump of NCP to host:

```
                                                   ┌─,ACTION=COMP─┐
►►─MODIFY procname,DUMP──,ID=ncp_name──,OPTION=DYNA──────────────┼──────────►
                                                   │              │
                                   ┌─,TYPE=NCP─┐   │              │
►──────────────────────────────────┼───────────┼───┼──────────────┼──────────►◄
  │                 (1)            │           │   │              │
  └─,DUMPDS=name───────────────────┘           │   │              │
```

Notes:

1 If the NCP has been acquired before activation, DUMPDS is required.

Transfer CSP or MOSS dump from hard disk to host:

```
                                                   ┌─,ACTION=COMP─┐
►►─MODIFY procname,DUMP──,ID=ncp_name──,TYPE=──┬─CSP──┬──────────┼──────────►
                                               └─MOSS─┘          │
```

```
►──┬──────────────────────────────────────────────────────────────────►◄
   │                 (1)
   └─,DUMPDS=name──────┘
```

Notes:

1 If the NCP has been acquired before activation, DUMPDS is required.

Transfer NCP, CSP, or MOSS dump from hard disk to host:

```
                                                   ┌─,TYPE=NCP──────┐
►►──MODIFY procname,DUMP──,ID=ncp_name──,ACTION=TRANSFER──┤                ├──►
                                                   └─,TYPE=──┬─CSP──┬─┘
                                                             ├─MOSS─┤
                                                             └─NCP──┘

►──┬──────────────────────────────────────────────────────────────────►◄
   │                 (1)
   └─,DUMPDS=name──────┘
```

Notes:

1 If the NCP has been acquired before activation, DUMPDS is required.

Purge dump from hard disk:

```
                                                   ┌─,TYPE=NCP──────┐
►►──MODIFY procname,DUMP──,ID=ncp_name──,ACTION=PURGE──┤                ├──────►◄
                                                   └─,TYPE=──┬─CSP──┬─┘
                                                             ├─MOSS─┤
                                                             └─NCP──┘
```

Abbreviations

Operand	Abbreviation
MODIFY	F
ACTION=TRANSFER	ACTION=TRANS
DUMPDS	DS
DUMPSTA	DST
OPTION=DYNA	OPT=DYNA or DYNA
OPTION=STATIC	OPT=STATIC
RMPO=YES	RMPO or RMPO=Y
RMPO=NO	RMPO=N

Purpose

The MODIFY DUMP (dump of an NCP) command is used to control NCP, communication scanner processor (CSP), and maintenance and operator subsystem (MOSS) dumps. Some functions use the IBM 3720 or 3745 Communication Controller's hard disk. The functions that can be performed are:

- Dump the NCP from the communications control unit (CCU) to the host

- Dump the NCP from the CCU and store the dump on the hard disk
- Transfer an NCP, CSP, or MOSS dump from the hard disk to the host
- Purge an NCP, CSP, or MOSS dump from the hard disk

Operands

procname

The procedure name for the command. If *procname* in the START command was specified as *startname.ident*, where *startname* is the VTAM start procedure and *ident* is the optional identifier, either *startname.ident* or *ident* can be specified for *procname*.

If *procname* in the START command was *startname*, *startname* must be specified for *procname*.

ACTION

Specifies what is to be done to the dump. ACTION=STORE requires NCP Version 5 Release 3 or later.

ACTION=TRANSFER

VTAM stores the dump in a host data set, using SSP as the interface to the dump data set.

If TYPE=CSP or TYPE=MOSS, VTAM transfers the CSP or MOSS dump (taken automatically when the CSP or MOSS fails) from the controller's hard disk or diskette to the host. When the transfer is complete, MOSS purges the dump from the controller's hard disk.

If TYPE=NCP, VTAM transfers the dump from the IBM 3720 or the 3745 Communication Controller hard disk to the host. The dump is not purged.

ACTION=TRANSFER and TYPE=NCP are valid only if an NCP dump is on the controller's hard disk from a previous VARY ACT DUMPLOAD=YES command or because DUMPLD=YES is coded on the PCCU definition statement.

ACTION=PURGE

VTAM purges the dump from the disk.

If TYPE=CSP or TYPE=MOSS, VTAM purges the CSP or MOSS dump (taken automatically when the CSP or MOSS fails) from the controller's hard disk.

If TYPE=NCP, VTAM purges an NCP dump previously stored on the IBM 3720 or 3745 Communication Controller hard disk. VTAM does not transfer the dump to the host.

ACTION=PURGE and TYPE=NCP are valid only if an NCP dump is on the controller's hard disk from a previous VARY ACT DUMPLOAD=YES command or because DUMPLD=YES is coded on the PCCU definition statement.

ACTION=COMP

Specifies the compatibility mode of operations for this command with previous releases of VTAM.

If TYPE=CSP or TYPE=MOSS, VTAM transfers the CSP or MOSS dump (taken automatically when the CSP or MOSS fails) from the controller's hard disk to the host.

If TYPE=NCP, VTAM dumps the NCP and stores the results at the host. The type of NCP dump (static or dynamic) to be taken is specified on the OPTION operand.

ACTION=STORE
VTAM causes the NCP to be dumped to the controller's hard disk only if DUMPLOAD=YES is specified on the VARY ACT command or DUMPLD=YES is specified on the PCCU definition statement and the dump slot for this CCU on the controller's hard disk is empty. Use the DISPLAY DISK command to see that these conditions are met. If either one of these conditions is not met, a dump to disk will not take place and the NCP will be deactivated.

Only OPTION=STATIC and ID=*ncp_name* are allowed if ACTION=STORE is specified. No other operands are allowed.

ACTION=STORE requires NCP Version 5 Release 3 or later.

DUMPDS=name
Identifies the file that is to contain this dump. The specified file should be large enough to contain the dump. The contents of the file are overwritten by the dump. *name* must be the data definition name on the DD statement that defines the file to receive the dump.

If ID=*link_station_name,* this operand must be specified.

If ID=*ncp_name*, the DUMPDS operand (if specified) overrides any file specification in the PCCU definition statement. If this operand is omitted, VTAM uses the file specified in the PCCU definition statement. If the dump file is not specified on either the MODIFY DUMP command or the PCCU definition statement, the command fails.

If the NCP has been acquired before activation, the DUMPDS operand is required for all non-static dump types including CSP, MOSS, and NCP dump transfers and an NCP dynamic dump. VTAM does not allow static dumps of NCPs that have been acquired before activation.

DUMPSTA=link_station_name
Specifies the name of a link station (channel or SDLC link station within another NCP) in a node adjacent to the NCP to be dumped, through which a static dump operation is to be performed. The link station must be active at the time of the dump. The VTAM-generated link station name (a 3-digit or 4-digit hexadecimal device number followed by -S) can be specified.

DUMPSTA applies only when all of the following conditions are met:
- ID=*ncp_name* is specified.
- OPTION=STATIC is specified (or assumed by default).
- TYPE=NCP is specified (or assumed by default).

If the DUMPSTA operand is specified, any previous DUMPSTA specifications (from the VARY ACT command or from the NCP definition) are overridden for this one dump operation. If a null value is specified (that is, if DUMPSTA= is specified), VTAM selects an available link station, giving preference to a channel link station over any SDLC link stations.

If the DUMPSTA operand is omitted, the current dump station name from the VARY ACT command or from the NCP definition (in that order) is used. If the current dump station name is null, VTAM selects an available link station as described above.

ID Specifies the NCP to be dumped or the link station through which a remote NCP is to be dumped.

ID=ncp_name
Specifies an active NCP

ID=link_station_name
Specifies an SDLC link station within an NCP that is adjacent to the communication controller containing the NCP to be dumped. The associated SDLC link must be active. If ID=*link_station_name* is specified, the DUMPDS operand is required, and the DUMPSTA and OPTION=DYNA operands are not allowed.

Note: CSP and MOSS dumps cannot be taken by specifying a link station name. Specify the NCP name to take CSP and MOSS dumps.

OPTION
Provides additional specifications for an NCP dump. The OPTION operand applies if TYPE=NCP is specified or assumed by default, and if ACTION=COMP or ACTION=STORE.

OPTION=DYNA
Applies only when the ID operand specifies the name of an active NCP. OPTION=DYNA specifies that the NCP is to be dumped dynamically. That is, NCP processing continues while the NCP's contents are dumped. The NCP is not deactivated. VTAM requests multiple storage images from the NCP, and the resulting output reflects the storage contents of the communication controller over the period required to complete the dump.

Note that the following two commands produce identical results:

```
F NET,DUMP,ID=ncp_name,DYNA

F NET,DUMP,ID=ncp_name,OPTION=DYNA
```

OPTION=STATIC
Specifies that the NCP is to be dumped statically. That is, NCP processing stops and the NCP is deactivated. The resulting output reflects the storage contents of the communication controller at the time the dump was started.

When TYPE=NCP and OPTION=STATIC, VTAM checks for the availability of the NCP dump data set. If this data set is not available, the command fails and the NCP remains active.

When ACTION=STORE, issue the DISPLAY DISK command to determine that the automatic dump switch in the controller is set on (DUMPLOAD=YES on VARY ACT command or DUMPLD=YES on the PCCU definition) and that the dump slot for this CCU on the controller's hard disk is empty. If either one of these conditions is not met, no dump to disk will take place, and the NCP will be deactivated.

RMPO
Specifies whether the communication controller containing the NCP is to be powered off after a static dump and deactivation of the NCP.

RMPO=YES
Specifies that the communication controller is to be powered off. RMPO=YES is valid only for a static NCP dump (OPTION=STATIC is specified or assumed by default). Also, RMPO=YES should be entered only for an NCP that is in a communication controller with the remote power-off facility.

Note that RMPO can be entered instead of RMPO=YES.

RMPO=NO
Specifies that the communication controller is not to be powered off.

TYPE
Specifies the type of dump.

If ACTION=TRANSFER and either TYPE=CSP or TYPE=MOSS, the box event record (BER) log, configuration data file (CDF), token-ring interface coupler (TIC) dump, and channel adapter (CA) dump are transferred automatically from the hard disk with the CSP or MOSS dump. If the CSP or MOSS dump is not present, the BER log, CDF, TIC dump, and CA dump are transferred; however, after they are transferred, the MODIFY DUMP command will fail because the specified dump is not present.

TYPE=CSP

If ACTION=TRANSFER or COMP, transfers a dump of the NCP's communication scanner processor (taken automatically when the CSP fails) from the controller's hard disk to the host data set using SSP as the interface to the dump data set. From the host data set, it can be formatted and printed.

The file to contain this dump can be specified by the operator with the DUMPDS operand of the MODIFY DUMP command, or it can be specified by the system programmer on the CDUMPDS operand of the PCCU definition statement. If neither the DUMPDS operand nor the CDUMPDS operand are specified, VTAM uses the dump file specified by the DUMPDS operand of the PCCU definition statement.

If ACTION=PURGE, purges the CSP dump from the hard disk or diskette in the controller.

TYPE=MOSS

If ACTION=TRANSFER or COMP, transfers a dump of the maintenance operator subsystem (taken automatically when the MOSS fails) from hard disk or diskette in the controller to the host data set using SSP as the interface to the dump data set.

The file to contain this dump can be specified by the operator with the DUMPDS operand of the MODIFY DUMP command, or it can be specified by the system programmer on the MDUMPDS operand of the PCCU definition statement. If neither the DUMPDS operand nor the MDUMPDS operand are specified, VTAM uses the dump file specified by the DUMPDS operand of the PCCU definition statement.

If ACTION=PURGE, purges the MOSS dump from the hard disk or diskette in the controller.

TYPE=NCP

If ACTION=COMP, TYPE=NCP specifies a normal dump of the NCP. If ACTION=TRANSFER, the resulting dump is sent to the host from the IBM 3720 or 3745 Communication Controller hard disk. If ACTION=PURGE, the dump is purged from the IBM 3720 or 3745 Communication Controller hard disk.

If ACTION=TRANSFER or PURGE, the OPTION operand does not apply. If ACTION=TRANSFER, the host file to contain the transferred dump can be specified by the operator with the DUMPDS operand of the MODIFY DUMP command, or it can be specified by the system programmer on the DUMPDS operand of the PCCU definition statement.

If TYPE=NCP and ACTION=COMP, the OPTION operand can be used to specify whether this is to be a dynamic or static dump.

MODIFY ENCR command

```
►►──MODIFY procname,ENCR=──┬─COND─┬──,ID=lu_name──────────────────────────►◄
                           ├─OPT──┤
                           └─REQD─┘
```

Abbreviations

Operand	Abbreviation
MODIFY	F

Purpose

The MODIFY ENCR (encryption) command allows you to change the cryptography specifications for logical units. Logical units (application programs, independent LUs, and device type logical units) can be defined as having one of several cryptography specifications. These specifications define the cryptographic capabilities or user session requirements involving the logical units and are described in the *z/OS Communications Server: SNA Network Implementation Guide*.

Note: The only way to modify ENCRTYPE is to use the MODIFY SECURITY command.

Operands

procname
The procedure name for the command. If *procname* in the START command was specified as *startname.ident*, where *startname* is the VTAM start procedure and *ident* is the optional identifier, either *startname.ident* or *ident* can be specified for *procname*.

If *procname* in the START command was *startname*, *startname* must be specified for *procname*.

ENCR
Specifies the new cryptography specifications of the logical unit. The level of the cryptography specification can only be raised. Any attempt to lower the level is rejected. The new level is effective for all future sessions involving the logical unit; existing active or pending sessions are not affected.

ENCR=OPT
Raises the level of the logical unit's cryptography specification from no cryptography to optional (capable of cryptography).

ENCR=COND
Raises the level of the logical unit's cryptography specification from no cryptography or optional to required (that is, all user sessions must be encrypted) if both sides support encryption. If the session partner does not support encryption, the session does not fail; instead, a session is established with no encryption of data.

ENCR=REQD
Raises the level of the logical unit's cryptography specification from no cryptography or optional (or selective or conditional for application programs) to required (that is, all user sessions must be encrypted).

ID=lu_name

Specifies the name of the logical unit whose cryptography specification is to be changed. The logical unit can be either an application program, a device-type logical unit, or an independent LU.

The name can be a network-qualified name. It cannot be a USERVAR or LUALIAS name. If the name specified on the ID operand is network-qualified, this name is considered to be the real name of the resource. The name can be an ACB name or an alias name, so long as it is not network-qualified.

Following is an example of an APPL major node definition to show how application names can be network-qualified:

```
x      APPL ACBNAME=y,...
```

In this example, *x* (the application name) can always be network-qualified. The value *y* (the ACB name) can be network-qualified only if *y* is the same as *x*.

Note: If ID specifies the name of an LU 6.2 application program, you should use the MODIFY ENCR command only when no sessions exist for logon modes other than SNASVCMG. If sessions are active on logon modes other than SNASVCMG, and you use the MODIFY ENCR command to change the encryption level, any attempt to establish a new session with these logon modes is rejected until all existing sessions on that mode that use the previous encryption level have ended.

MODIFY EXIT command

Activate or replace an exit routine:

```
►►──MODIFY procname,EXIT──,OPTION=──┬─ACT──┬──────────────────────────────►
                                    └─REPL─┘

►─,ID=──┬─ISTEXCDM──┬──────────────────────┬──┬──────────────────────────┬──►◄
        │           └─,PARMS=character_string─┘  └─,MODULE=module_name──┘
        ├─ISTEXCVR──────────────────────────┤
        ├─ISTCMMND──┬──────────────────────┤
        │           └─,PARMS=character_string─┘
        ├─ISTEXCAA──┬──────────────────────┤
        │           └─,PARMS=character_string─┘
        ├─ISTEXCCS──┬──────────────────────┤
        │           └─,PARMS=character_string─┘
        ├─ISTEXCGR──┬──────────────────────┤
        │           └─,PARMS=character_string─┘
        ├─ISTEXCPM──┬──────────────────────┤
        │           └─,PARMS=character_string─┘
        ├─ISTEXCSD──┬──────────────────────┤
        │           └─,PARMS=character_string─┘
        └─ISTEXCUV──┬──────────────────────┘
                    └─,PARMS=character_string─┘
```

Activate a multiple instance of ISTEXCPM:

```
►►──MODIFY procname,EXIT──,OPTION=ACT──,ID=ISTEXCPM.instance_name──────────►

►──┬──────────────────────┬──────────────────────────────────────────────►◄
   └─,PARMS=character_string─┘
```

Replace a multiple instance of ISTEXCPM:

```
►►──MODIFY procname,EXIT──,OPTION=REPL──,ID=ISTEXCPM.instance_name──────────►

►──┬──────────────────────┬──┬──────────────────────┬──────────────────────►◄
   └─,MODULE=module_name──┘  └─,PARMS=character_string─┘
```

Deactivate an exit routine:

```
►►──MODIFY procname,EXIT──,OPTION=──┬─INACT──┬──────────────────────────────►
                                    └─FORCE──┘
```

```
►─,ID=─┬─ISTEXCDM──┬──────────────────────┬──────────────────────────────►◄
       │           └─,PARMS=character_string─┘
       ├─ISTEXCVR──────────────────────────┤
       ├─ISTCMMND──┬──────────────────────┤
       │           └─,PARMS=character_string─┘
       ├─ISTEXCAA──┬──────────────────────┤
       │           └─,PARMS=character_string─┘
       ├─ISTEXCCS──┬──────────────────────┤
       │           └─,PARMS=character_string─┘
       ├─ISTEXCGR──┬──────────────────────┤
       │           └─,PARMS=character_string─┘
       ├─ISTEXCPM──┬──────────────────────┤
       │           └─,PARMS=character_string─┘
       ├─ISTEXCSD──┬──────────────────────┤
       │           └─,PARMS=character_string─┘
       └─ISTEXCUV──┬──────────────────────┘
                   └─,PARMS=character_string─┘
```

Deactivate a multiple instance of ISTEXCPM:

```
►►─MODIFY procname,EXIT─,OPTION=─┬─INACT─┬─,ID=ISTEXCPM.instance_name──────►
                                 └─FORCE─┘

►──┬──────────────────────┬──────────────────────────────────────────────►◄
   └─,PARMS=character_string─┘
```

Abbreviations

Operand	Abbreviation
MODIFY	F
MODULE	MOD
OPTION	OPT

Purpose

The MODIFY EXIT command enables you to activate, deactivate, or replace a specified installation-wide exit. Using this command, you can modify the state of an installation-wide exit that was loaded during initialization or activated, replaced, or deactivated with an earlier MODIFY EXIT command.

Note: To modify an ISTEXCPM exit, the MODIFY EXIT command must be issued from a program operator application (POA) program, unless OPTION=FORCE is specified.

Operands

procname

The procedure name for the command. If *procname* in the START command was specified as *startname.ident*, where *startname* is the VTAM start procedure and *ident* is the optional identifier, either *startname.ident* or *ident* can be specified for *procname*.

If *procname* in the START command was *startname*, *startname* must be specified for *procname*.

ID Specifies the installation-wide exit to be activated, deactivated, or replaced.

ID=exit_name
Specifies the name of the installation-wide exit routine to be activated, deactivated, or replaced.

For further information about valid installation-wide exit routines, see *z/OS Communications Server: SNA Customization*.

Exit_name can be one of the following:

ISTEXCAA
Session management exit routine

ISTEXCCS
Configuration services XID exit routine

ISTEXCDM
Directory management exit routine

ISTEXCPM
Performance monitor exit routine

Note: Only a program operation application (POA) program can issue the MODIFY EXIT command for ISTEXCPM, unless OPTION=FORCE is specified.

ISTEXCSD
Selection of definitions for dependent logical units (SDDLU) exit routine

ISTEXCVR
Virtual route selection exit routine

ISTCMMND
Command verification exit routine

ISTEXCGR
Generic resource resolution exit routine

ISTEXCUV
USERVAR exit routine

ID=ISTEXCPM.instance_name
Specifies the instance of ISTEXCPM to be activated, deactivated, or replaced. The *instance_name* is the name of the load module containing the exit.

Note: Only a program operation application (POA) program can issue the MODIFY EXIT command for ISTEXCPM.*instance_name*, unless OPTION=FORCE is specified.

An *instance_name* being activated cannot have the same load module name as one that is already active.

MODULE=module_name
Specifies the load module name containing the exit to be activated, or the load module name containing an alternate exit to replace an active exit.

module_name cannot have the same load module name as any other currently active exit.

The MODULE operand is valid only with OPTION=ACT and OPTION=REPL.

Note: The MODULE operand is not valid when ID=ISTEXCPM.*instance_name* and OPTION=ACT are both specified.

OPTION
Specifies whether the installation-wide exit is to be activated, deactivated, or replaced.

OPTION=ACT
Specifies that the installation-wide exit is to be invoked where the installation-wide exit routine is indicated within VTAM. The invocation points cannot be modified.

OPTION=INACT
Specifies that the installation-wide exit should not be invoked during VTAM processing.

OPTION=REPL
Specifies that the installation-wide exit should be replaced by the installation-wide exit routine contained in the module named on the MODULE operand during VTAM processing.

OPTION=FORCE
Specifies that the installation-wide exit should be deactivated immediately. The exit will not be driven for inactivation in this case.

Notes:

1. OPTION=FORCE should not be used in place of OPTION=INACT. Use OPTION=FORCE only if a previous MODIFY EXIT,OPTION=INACT command failed to deactivate the exit.
2. OPTION=FORCE is valid for use by a network operator and not by a program operator application (POA) program.

PARMS=character_string
Specifies a character string, 1–70 characters in length, that can be passed to an installation-wide exit routine. You can use the PARMS operand to pass user-specified data or control information to the following exit routines:

- ISTCMMND
- ISTEXCAA
- ISTEXCDM
- ISTEXCSS
- ISTEXCGR
- ISTEXCPM
- ISTEXCSD
- ISTEXCUV

The PARMS operand is ignored for other exit routines or if OPT=FORCE is specified.

See *z/OS Communications Server: SNA Customization* for more information on how this data is passed to the exit routine.

MODIFY IMR command

Start intensive mode recording:

```
►►──MODIFY procname,IMR──,ID=┬─link_station_name─┬──┬─────────────┬──────────►
                             └─pu_name──────────┘  └─,OPTION=ACT─┘

►─┬─────────────────────┬──────────────────────────────────────────────────►◄
  └─,RECLIM=number_of_errors┘
  ┌─,RECLIM=10──────────┐
```

Stop intensive mode recording:

```
►►──MODIFY procname,IMR──,ID=┬─link_station_name─┬──,OPTION=INACT──────────►◄
                             └─pu_name──────────┘
```

Abbreviations

Operand	Abbreviation
MODIFY	F
OPTION=ACT	OPT=ACT
OPTION=INACT	OPT=INACT

Purpose

The MODIFY IMR (intensive mode recording) command enables you to request that an NCP provide detailed information concerning temporary line errors or other hardware error conditions for a station on an SDLC link. IMR can be specified for a peripheral physical unit of an NCP or for a cross-subarea link station within an NCP. For more information on intensive mode recording, such as the reason for using it and information on where the output is recorded, see *z/OS Communications Server: SNA Diagnosis Vol 1, Techniques and Procedures*.

Operands

procname
The procedure name for the command. If *procname* in the START command was specified as *startname.ident*, where *startname* is the VTAM start procedure and *ident* is the optional identifier, either *startname.ident* or *ident* can be specified for *procname*.

If *procname* in the START command was *startname*, *startname* must be specified for *procname*.

ID Specifies the name of the resource for which IMR data is to be recorded.

ID=link_station_name
Records IMR data for a link station.

ID=pu_name
Records IMR data for a physical unit.

OPTION
Specifies whether IMR should be started or stopped for the named link station or physical unit.

OPTION=ACT
Specifies that IMR should be started for the named link station or physical unit.

OPTION=INACT
Specifies that ongoing intensive mode recording should be stopped, and that the NCP is not to generate any more IMR records for the named link station or physical unit.

RECLIM=number_of_errors
Specifies the maximum number of temporary errors that are recorded for the named link station or physical unit. When this limit is reached (or IMR is canceled with OPTION=INACT), the NCP reverts to sending only permanent error records to VTAM. Any decimal integer 1–65535 can be specified. The default is 10. RECLIM is not applicable if OPT=INACT is specified.

MODIFY INOPDUMP command

```
►►──MODIFY procname,INOPDUMP=──┬─OFF─┬──┬──────────────────────────────────┬──►◄
                               └─ON──┘  └─,TRLE=──┬─trle_name──────────────┬─┘
                                                  │   ┌──────────────┐     │
                                                  │   ▼              ,│     │
                                                  └─(────trle_name────┴─)─┘
```

Abbreviations

Operand	Abbreviation
MODIFY	F

Purpose

INOPDUMP controls the automatic dumping of VTAM when an inoperative condition occurs in one of VTAMs data link control layers. There are two separate but related controls:

- The global INOPDUMP status, which is also the VTAM INOPDUMP start option. This controls automatic dumping when an inoperative condition is declared on a resource that is not defined within a TRLE (transport resource list entry). The global INOPDUMP status is copied to the TRLE when a TRLE is activated if the TRLE InOpDump status has not been explicitly set.
- The TRLE INOPDUMP status which controls automatic dumping when an inoperative condition is declared on a resource that is defined within the TRLE.

Use MODIFY INOPDUMP to alter either the global or TRLE INOPDUMP status.

Operands

procname
The procedure name for the command. If procname in the START command was specified as startname.ident, where startname is the VTAM start procedure and ident is the optional identifier, either startname.ident or ident can be specified for procname.

If procname in the START command was startname, startname must be specified for procname.

INOPDUMP=ON
Specifies that either the global or TRLE inopdump status is to be set on.

INOPDUMP=OFF
Specifies that either the global or TRLE inopdump status is to be set off.

TRLE=trle_name
Specifies the TRLE name or names for which the INOPDUMP status is to be altered.

Notes:

1. If the TRLE operand is not specified, both the global and TRLE statuses are altered. If the TRLE operand is specified, only the status of the TRLE for the name or names specified is altered and the global status remains unchanged.
2. The response to a successful global Modify INOPDUMP command will always include the global INOPDUMP status. If the TRL major node was available at

the time of the command, you will receive a reminder message that the status for all TRLEs has also been changed. The response to a successful Modify INOPDUMP command that includes the TRLE option will always include the global INOPDUMP status along with the TRLE name or names that were processed.

Examples

Modifying INOPDUMP information:

```
f vtam,inopdump=off,trle=trle1a
   IST097I MODIFY ACCEPTED
   IST1865I GLOBAL INOPDUMP = OFF
   IST1866I TRLE = TRLE1A   INOPDUMP = OFF
   IST223I MODIFY INOPDUMP COMMAND COMPLETED
   IST314I END
```

MODIFY IOPD command

```
►►──MODIFY procname,IOPD──,IOINT=number_of_seconds──────────────────────────►◄
```

Abbreviations

Operand	Abbreviation
MODIFY	F

Purpose

This command allows you to change the I/O problem determination (IOPD) time-out interval. This interval determines how long certain VTAM I/O operations or internal procedures can remain pending before VTAM reports them to the operator. You can then decide whether a problem exists and what action, if any, is warranted.

See *z/OS Communications Server: SNA Diagnosis Vol 1, Techniques and Procedures* for guidance on setting the I/O problem determination time-out interval.

Note: You can use the “MODIFY VTAMOPTS command” on page 422 (IOINT operand) to perform the same function as this command.

Operands

procname
The procedure name for the command. If *procname* in the START command was specified as *startname.ident*, where *startname* is the VTAM start procedure and *ident* is the optional identifier, either *startname.ident* or *ident* can be specified for *procname*.

If *procname* in the START command was *startname*, *startname* must be specified for *procname*.

IOINT=number_of_seconds
Specifies the time-out interval (in seconds) for the I/O problem determination function. The value must be a decimal integer 0–5366000. IOINT=0 specifies that the I/O problem determination function is to be deactivated, meaning that VTAM will not notify the operator of pending I/O operations or internal procedures. IOINT is rounded up to the nearest 60-second multiple.

MODIFY IOPURGE command

```
►►──MODIFY procname,IOPURGE=timeout_value──────────────────────────────►◄
```

Abbreviations

Operand	Abbreviation
MODIFY	F

Purpose

The MODIFY IOPURGE (input/output purge) command allows you to set a time interval after which outstanding I/O is assumed to be lost and recovery steps are taken. The types of outstanding I/O that are examined are CDINIT requests, direct search list requests, APPN search requests, and HPR route setup requests.

Prior to the availability of this function (or when IOPURGE is set to zero), outstanding session requests could remain indefinitely. For example, when an intermediate host that is used in session routing goes down, no response is received to a session establishment request and the LU remains hung indefinitely. By setting an IOPURGE value, you can, in effect, cancel session requests that fail to complete in a certain amount of time. This frees the LU so you can request a session using an alternate path.

It is recommended that you set an IOPURGE value of 3 minutes or more. In some circumstances, for example logging on a remote LU via a slow modem, session setup might take longer and the IOPURGE should be adjusted upward accordingly. A good rule of thumb is to set the IOPURGE value for twice as long as session setup usually takes. If you set IOPURGE too low, the session request is canceled before a response can be received, and you will have to repeat the session request.

Note: You can use the “MODIFY VTAMOPTS command” on page 422 to perform the same function as this command.

Operands

procname

The procedure name for the command. If *procname* in the START command was specified as *startname.ident*, where *startname* is the VTAM start procedure and *ident* is the optional identifier, either *startname.ident* or *ident* can be specified for *procname*.

If *procname* in the START command was *startname*, *startname* must be specified for *procname*.

IOPURGE=timeout_value

Specifies the time interval allowed to elapse before outstanding I/O is assumed to be lost. When this time interval expires, recovery steps are taken. VTAM supports this feature for CDINIT requests, direct search list requests, APPN search requests, and HPR route setup requests.

The time interval can be specified in seconds, minutes, hours, or days. The minimum value is 30 seconds. The maximum value is 7 days, or the equivalent

value in seconds, minutes, or hours. A value of 0 deactivates the IOPURGE function. If you code a value from 1 to 30, VTAM sets IOPURGE to 30 seconds.

Note: To reduce potential performance strain, set IOPURGE greater than 2 minutes.

IOPURGE=n or IOPURGE=nS
Specifies the number of seconds that can pass before a response is assumed to be lost. By default, the time is assumed to be seconds, unless M, H, or D is specified.

IOPURGE=nM
Specifies the number of minutes that can pass before a response is assumed to be lost.

IOPURGE=nH
Specifies the number of hours that can pass before a response is assumed to be lost.

IOPURGE=nD
Specifies the number of days that can pass before a response is assumed to be lost.

MODIFY LINEDEF command

```
►►──MODIFY procname,LINEDEF──,ID=line_name──,USE=──┬─DEFINED─┬──────────────────►◄
                                                   └─SPARE───┘
```

Abbreviations

Operand	Abbreviation
MODIFY	F
USE=DEFINED	DEFINED
USE=SPARE	SPARE

Purpose

The MODIFY LINEDEF command allows you to dynamically change the definition of a redefinable line. A redefinable line is an SDLC line that has been defined in an NCP major node with USE=REDEF or USE=SPARE. A redefinable line must be the only line defined in the line group.

Operands

procname
The procedure name for the command. If *procname* in the START command was specified as *startname.ident*, where *startname* is the VTAM start procedure and *ident* is the optional identifier, either *startname.ident* or *ident* can be specified for *procname*.

If *procname* in the START command was *startname*, *startname* must be specified for *procname*.

ID=line_name
Specifies the name of an SDLC line defined in an NCP major node with the USE=REDEF or USE=SPARE.

USE
Specifies that the line identified on the ID operand is to be dynamically redefined.

USE=DEFINED
Specifies that the line identified on the ID operand is to become usable.

USE=SPARE
Specifies that the line identified on the ID operand is to become a spare line.

MODIFY LL2 command

Start a continuous link level 2 test:

```
►►─MODIFY procname,LL2──,ID=name──,OPTION=CONT──┬──────────────┬──────────────►
                                                └─,DATA=data───┘

►─┬─,NFRAMES=1──────────────────────┬──────────────────────────────────────►◄
  └─,NFRAMES=number_of_test_messages─┘
```

Start a brief link level 2 test:

```
►►─MODIFY procname,LL2──,ID=name──┬──────────────┬──────────────────────────►
                                  └─,DATA=data───┘

►─┬─,NFRAMES=1──────────────────────┬─┬─,NTRANS=10──────────────────────┬──►◄
  └─,NFRAMES=number_of_test_messages─┘ └─,NTRANS=number_of_test_messages─┘
```

Stop a link level 2 test:

```
►►─MODIFY procname,LL2──,ID=name──,OPTION=CANCEL──────────────────────────►◄
```

Abbreviations

Operand	Abbreviation
MODIFY	F
OPTION=CANCEL	OPT=CANCEL or CANCEL
OPTION=CONT	OPT=CONT or CONT

Purpose

The MODIFY LL2 command is used to request a link level 2 test for a nonswitched SDLC link. This tests communication lines between the following:

- An NCP and a peripheral PU attached to it.
- Two NCPs (PU type 4).
- VTAM and a peripheral PU attached to it.
- An NCP and another VTAM (PU type 5). The command must be initiated from the NCP's domain, and the link station identified by the ID operand must be inactive or inoperative.
- VTAM and another VTAM (PU type 5). The command must be initiated from the VTAM with the highest subarea, and the link station identified by the ID operand must be inactive or inoperative.

The test is performed by sending test data over the link from the primary end of the line to the remote station; the data is then echoed back to the sender. The data received is compared with the data sent. VTAM collects the results and displays

these results in a message. For more information on when and how to run an LL2 test, see *z/OS Communications Server: SNA Diagnosis Vol 1, Techniques and Procedures*.

Operands

procname

The procedure name for the command. If *procname* in the START command was specified as *startname.ident*, where *startname* is the VTAM start procedure and *ident* is the optional identifier, either *startname.ident* or *ident* can be specified for *procname*.

If *procname* in the START command was *startname*, *startname* must be specified for *procname*.

DATA=data

Specifies optional user data to be used as part of the test message. Any EBCDIC alphabetic, numeric, or special characters (such as @ # $) can be specified. The maximum number of characters permitted depends on the characteristics of the device at the receiving end of the test. If the DATA operand is omitted, VTAM sends test messages without user data.

If DATA is specified and the physical unit returns the correct number of echoes but does not return any data, the physical unit probably does not support echo check with data. To determine whether a physical unit supports data, see the component description for that physical unit.

ID=name

Specifies:

- For a test of an SDLC link:
  - Between two NCPs or
  - Between an NCP and a host processor or
  - Between two host processors

  the name of a link station on the link that is to be tested. The specified link station must be in the NCP or the host that is to initiate the test. The link station at the originating end must be inactive.
- For a link to an SDLC peripheral node:

  the name of a physical unit on the link that is to be tested. The SDLC link must be active and the specified physical unit must be inactive, but, for a multipoint link, the other physical units on the link can be active during the test.

If there is a conflict between VTAM and the NCP about whether a resource has been dynamically reconfigured, an informational message is displayed. This could happen when an NCP is shared among VTAMs.

See *z/OS Communications Server: SNA Diagnosis Vol 1, Techniques and Procedures* for additional information on testing a nonswitched SDLC communication line.

NFRAMES=number_of_test_messages

Specifies (for a multipoint line) the number of test messages to send to the physical unit each time its station is selected. This option allows the test messages to be interleaved with other data going to other stations on the line. Specify any decimal integer 1–65535. The default is 1.

NTRANS=number_of_test_messages
Specifies the number of test messages to send. This number can be any decimal integer 1–65535. (Specifying NTRANS=65535 gives the same result as specifying OPTION=CONT.)

NTRANS must not be specified on the same command as the OPTION operand. If neither NTRANS nor OPTION is specified, the default, NTRANS=10, is used.

OPTION
Specifies a test option to use instead of the NTRANS value. If OPTION is not specified, the value in effect for NTRANS is used. OPTION must not be specified on the same command with the NTRANS operand.

OPTION=CANCEL
Specifies that the test running currently should be stopped.

OPTION=CONT
Specifies that the test being started should run continuously until canceled by the VTAM operator.

MODIFY LOAD command

Store a load module on the hard disk, and optionally for a 3745, schedule an IPL:

```
►►──MODIFY procname,LOAD──,ID=ncp_name──┬─────────────────┬──────────────────────────►
                                        ├─,ACTION=ADD─────┤
►──┬──────────────────────────────────────────────────────────────────────────────────►
   │                                                                                   │
   │                                   ┌─,NOTIFY=60──────────────┐                     │
   └─,IPLTIME=─(date,time)─────────────┤                         │                     │
                                       └─,NOTIFY=─┬─────────────┬─┘                     │
                                                  ├─NO──────────┤                       │
                                                  └─time_period─┘
►──┬──────────────────────────────────────────────────────────────────────────────────►◄
   │                                                                                   │
   └─,LOADMOD=load_module_name─────────────────────────────────────────────────────────┘
```

Replace a load module on the hard disk, and optionally for a 3745, schedule an IPL:

```
►►──MODIFY procname,LOAD──,ID=ncp_name──,ACTION=REPLACE──────────────────────────────►
►──┬──────────────────────────────────────────────────────────────────────────────────►
   │                                   ┌─,NOTIFY=60──────────────┐                     │
   └─,IPLTIME=─(date,time)─────────────┤                         │                     │
                                       └─,NOTIFY=─┬─────────────┬─┘                     │
                                                  ├─NO──────────┤                       │
                                                  └─time_period─┘
►──┬──────────────────────────────────────────────────────────────────────────────────►◄
   │                                                                                   │
   └─,LOADMOD=load_module_name─────────────────────────────────────────────────────────┘
```

Purge a load module from the hard disk:

```
►►──MODIFY procname,LOAD──,ID=ncp_name──,ACTION=PURGE────────────────────────────────►
►──┬──────────────────────────────────────────────────────────────────────────────────►◄
   │                                                                                   │
   └─,LOADMOD=load_module_name─────────────────────────────────────────────────────────┘
```

Cancel an ADD or REPLACE operation in progress:

```
►►──MODIFY procname,LOAD──,ID=ncp_name──,ACTION=CANCEL───────────────────────────────►
►──┬──────────────────────────────────────────────────────────────────────────────────►◄
   │                                                                                   │
   └─,LOADMOD=load_module_name─────────────────────────────────────────────────────────┘
```

Schedule or cancel an automatic IPL for an NCP load module in a 3745:

```
►►──MODIFY procname,LOAD──,ID=ncp_name──,ACTION=SETTIME──────────────────────────────►
```

MODIFY LOAD

```
►─,IPLTIME=──┬─(date,time)─┬─────────────────────────┬──────────────────────────►
             │             │ ┌─,NOTIFY=60──────────┐ │
             │             │ │                     │ │
             │             │ └─,NOTIFY=─┬─NO──────┬─┘ │
             │             │            │         │   │
             │             │            └─time_period─┘ │
             └─CANCEL──────┘────────────────────────────┘

►──┬──────────────────────────────┬──────────────────────────────────────────►◄
   └─,LOADMOD=load_module_name────┘
```

Rename a load module on the 3745 hard disk for MOSS:

```
►►──MODIFY procname,LOAD──,ID=ncp_name──,ACTION=RENAME──────────────────────►

►─,LOADMOD=load_module_name──,NEWNAME=new_load_module_name──────────────────►◄
```

Abbreviations

Operand	Abbreviation
MODIFY	F
ACTION=ADD	ACTION=A
ACTION=CANCEL	ACTION=C
ACTION=PURGE	ACTION=P
ACTION=RENAME	ACTION=N
ACTION=REPLACE	ACTION=R
ACTION=SETTIME	ACTION=S
IPLTIME=CANCEL	IPLT=C
IPLTIME=time	IPLT=time
LOADMOD :c .LM	
NEWNAME	NEWN
NOTIFY=NO	NT=NO
NOTIFY=time	NT=time

When using an abbreviation in place of an operand, code the abbreviation exactly as shown in the table. For example, when coding the abbreviation for IPLTIME=CANCEL, code only IPLT=C. Do not code IPLTIME=C.

Purpose

The MODIFY LOAD command is used to control NCP load module contents on IBM 3720 or 3745 Communication Controller hard disks. The actions that can be performed are:

- Move a load module from the NCP library to the communication controller hard disk.
- Replace a load module already on the communication controller hard disk.
- Purge a load module on the communication controller hard disk.
- Schedule a load module already on the IBM 3745 Communication Controller hard disk for an automatic IPL, or cancel a scheduled IPL.

- Rename a load module already on the IBM 3745 Communication Controller hard disk.

For additional information about using the timed IPL and automatic reloading functions, see the *z/OS Communications Server: SNA Network Implementation Guide*.

Use the “DISPLAY DISK command” on page 81 to examine the contents of the communication controller hard disk.

Operands

procname

The procedure name for the command. If *procname* in the START command was specified as *startname.ident*, where *startname* is the VTAM start procedure and *ident* is the optional identifier, either *startname.ident* or *ident* can be specified for *procname*.

If *procname* in the START command was *startname*, *startname* must be specified for *procname*.

ACTION

Specifies the action to take on the load module specified by LOADMOD. See Table 5 on page 340 for additional information about scheduling or cancelling IPL, or adding, purging, moving or replacing a load module.

ACTION=ADD

Requests that the load module specified by LOADMOD be stored on the communication controller’s hard disk. The name specified by LOADMOD cannot be the same name as a load module already on the disk. If the load module to be added is already on the controller hard disk, the command is rejected. (If you do not specify LOADMOD, it defaults to the NCP name specified on the ID operand.)

The 3720 disk holds a maximum of two load modules. The IBM 3745 Communication Controller’s hard disk holds a maximum of two load modules per CCU. If you request an ADD of a load module and the maximum number of load modules are on the disk, the request will be rejected. You then have two options:

- Replace one or both of the load modules already on the disk using the ACTION=REPLACE option.
- Purge one or all of the load modules already on the disk using the ACTION=PURGE option, and then add the module or modules desired with the ACTION=ADD option.

Table 5. Relationship between ACTION and IPLTIME operands

	IPLTIME=time	IPLTIME=CANCEL	IPLTIME not specified
ACTION=ADD Requests that the load module specified by LOADMOD be placed on the hard disk. If the load module to be added is already on the hard disk or if the load module slots are already full, the request is rejected.	Requests that the load module be scheduled for IPL at the specified time on the IPLTIME operand.	This is an incorrect specification.	V NET,ACT, LOADFROM=EXT can be used to load the load module into the CCU.
ACTION=REPLACE Requests that the load module specified by LOADMOD replace a load module of the same name already on the hard disk. If a load module with the name specified is not on the hard disk, VTAM attempts an ADD of the load module. The rules for a successful ADD then apply to the REPLACE option.	Requests that the load module be scheduled for IPL at the specified time on the IPLTIME operand.	This is an incorrect specification.	V NET,ACT, LOADFROM=EXT can be used to load the load module into the CCU. If a scheduled IPL is outstanding for the load module to be replaced, the scheduled IPL is canceled.
ACTION=SETTIME Requests that the load module specified by LOADMOD, already existing on the hard disk, be scheduled for an automatic IPL or have a scheduled IPL canceled. The IPLTIME operand is required.	Requests that the load module be scheduled for IPL (or changes a scheduled IPL) at the specified time on the IPLTIME operand.	Requests the scheduled IPL for the load module be canceled. The load module is not purged from the hard disk.	This is an incorrect specification.
ACTION=PURGE Requests that the load module specified by LOADMOD be purged from the hard disk. If no load module with the name specified by LOADMOD is on the hard disk, no action is taken and the request is rejected.	This is an incorrect specification.	This is an incorrect specification.	If a scheduled IPL is outstanding for the load module to be purged, the scheduled IPL is canceled.

ACTION=REPLACE

Requests that the load module specified by LOADMOD be replaced on the communication controller's hard disk. The name specified by LOADMOD should have the same name as a load module already on the disk, but this is not required. If a load module with the name specified is not on the disk, VTAM attempts an ADD of the load module. The rules for a successful ADD then apply to the REPLACE option.

You should be aware that the REPLACE option affects the automatic reload of a load module if an NCP abends. If the load module being replaced is the one tagged for automatic IPL by use of the DUMPLOAD operand on the VARY ACT command or the DUMPLD operand on the PCCU definition statement (that is, the load module to be reloaded if an NCP abend occurs), it is no longer tagged for automatic IPL after the replace operation begins, nor is the load module re-tagged for automatic IPL after the replace operation completes.

If the load module being replaced is not the load module tagged for automatic IPL, the automatic IPL tag is not affected during or after the replace of the other load module.

ACTION=PURGE

Requests that the load module and scheduled IPL (if applicable) specified by LOADMOD be purged from the hard disk. Only one load module is purged by this command. Issue a separate PURGE command for each load module to be purged. If no load module with the name specified by LOADMOD is on the disk, no action is taken and an error message is issued.

Prior to issuing a subsequent MODIFY LOAD command of any type, wait for the completion message of the purge request.

Note: ACTION=PURGE is not valid with the IPLTIME or NOTIFY operands.

ACTION=CANCEL

Requests that a nondisruptive MODIFY LOAD ACTION=ADD or REPLACE option be canceled. The command cannot be disruptive, and must still be executing in order to be canceled. This command does not reverse the process if the process is finished executing. The load module name specified for the CANCEL option must match the load module name specified in the ADD or REPLACE option that is to be canceled.

Regardless of whether the specified load module was originally tagged for automatic IPL, canceling an ADD or REPLACE option results in a PURGE of the partial load module on the disk.

Note: ACTION=CANCEL is not valid with the IPLTIME or NOTIFY operands.

A nondisruptive PURGE cannot be canceled with this command.

ACTION=SETTIME

Requests that the load module specified by LOADMOD, which already exists on the IBM 3745 Communication Controller hard disk, either be scheduled for automatic IPL or have its scheduled IPL canceled. If you use SETTIME, the IPLTIME operand is required.

See Table 5 on page 340 for additional information about scheduling IPL.

You can use the “DISPLAY DISK command” on page 81 to display the scheduled IPL time.

ACTION=RENAME

Requests that the load module on the IBM 3745 Communication Controller hard disk be renamed. This command changes the name MOSS associates with a specified load module on the disk. The internal NCP names

(specified in the NCP generation definition) are not affected by this command. If you use RENAME, both the LOADMOD and NEWNAME operands are required.

Renaming a load module that already has a timed IPL set does not cancel the scheduled IPL.

ID=ncp_name
Specifies the name of an active NCP (as specified in the PUNAME operand of the BUILD statement during NCP generation) that resides in the communication controller whose associated hard disk is to be modified.

IPLTIME
Specifies the scheduled IPL time or cancels an already existing scheduled IPL from the hard disk into the CCU. This operand is valid with ACTION=SETTIME, ADD, or REPLACE.

IPLTIME can be specified only when an IBM 3745 Communication Controller is being used.

Each load module can have only one IPL time selected for it. Two load modules on the same CCU cannot have estimated IPL times within 5 minutes of each other.

If the time you specify as the IPL time is the same as the current system time, MOSS does not IPL. See the "VARY ACT command" on page 452 for information about how to cause an immediate IPL.

IPLTIME=(date,time)
Specifies the time of the scheduled IPL. The format of the date entered is determined by the value specified on the DATEFORM start option. The valid possible values for this operand are:

- DATEFORM=MDY (default); date format is mm/dd/yy. The delimiters can be either slash (/) or dash (–).
- DATEFORM=DMY; date format is dd/mm/yy. The delimiters can be either slash (/) or period (.).
- DATEFORM=YMD; date format is yy/mm/dd. The delimiters can be slash (/), period (.), or dash (–).

For example, if DATEFORM=MDY is in effect, specify the IPL time in the form IPLTIME=(mm/dd/yy,hh:mm).

If the year is omitted, the current year is used. The command is rejected if the value entered for the date or time conflicts with any of the following restrictions:

- Date or time is not valid.
- Date or time is greater than 90 days from the current date or time. (If you specify a time interval greater than 15 days, minor MOSS clock deviation might occur.)
- Date or time is prior to current date or time.

The time *hh:mm* must be specified in military format (24-hour day) and is time zone independent. See Table 6 on page 343 for examples of time specifications.

Table 6. Examples of time specifications for IPLTIME

Location of operator	Location of 3745 for the scheduled IPL	Difference in time zones between the operator and 3745	Time specified in IPLTIME	Time of scheduled IPL at 3745
Los Angeles	New York	+ 3 hours	14:00	17:00
Paris	London	– 1 hour	13:00	12:00
Tokyo	Tokyo	0 hours	23:00	23:00

IPLTIME=CANCEL
Indicates that a scheduled IPL for the specified load module be canceled. ACTION=SETTIME is required.

LOADMOD=load_module_name
Specifies the name of the NCP load module. For ACTION=REPLACE or PURGE, the load module on the disk does not have to be the load module currently active in the communication controller.

For ACTION=ADD, ACTION=REPLACE, ACTION=PURGE, or ACTION=SETTIME, the LOADMOD operand, when not coded, defaults to the name specified for the ID operand. For ACTION=CANCEL, LOADMOD defaults to the name of the load module currently being loaded, if a load is in progress.

For ACTION=RENAME, the LOADMOD operand is required.

For ACTION=ADD or ACTION=REPLACE, the load module specified must be one of the load modules in the load library specified by the LOADLIB operand of the BUILD definition statement for the active NCP.

NEWNAME=new_load_module_name
Specifies the new name to be given to the load module specified by the LOADMOD operand. If the new name is the same as the value already specified in LOADMOD, the command is rejected.

NEWNAME can only be specified when an IBM 3745 Communication Controller is being used. NEWNAME is valid and is required when ACTION=RENAME is specified.

NOTIFY
Specifies if and when an alert is to be sent prior to the expiration of the scheduled IPL. NOTIFY is valid only when a time is specified in the IPLTIME operand. NOTIFY can only be specified when an IBM 3745 Communication Controller is being used.

An IPLTIME cannot be sooner than the NOTIFY time or the command fails. For example, if NOTIFY is allowed to take the default time (60 minutes) an IPLTIME of less than one hour away is not accepted.

Note: The alert is not displayed by VTAM; it is forwarded to the Tivoli® NetView® for z/OS, where it can be displayed using the hardware monitor.

NOTIFY=mmm
Indicates that an alert will be sent *mmm* minutes prior to expiration of the scheduled IPL. The default time is 60 minutes. The maximum value is 999 minutes.

NOTIFY=(hh,mm)
Indicates that an alert will be sent at time *hh,mm* prior to expiration of the scheduled IPL. The maximum value is 99,99 (99 hours and 99 minutes).

NOTIFY=NO
Indicates that no alert will be sent prior to the scheduled IPL.

MODIFY MSGMOD command

```
►►──MODIFY procname,MSGMOD=──┬─NO──┬──────────────────────────────────►◄
                             └─YES─┘
```

Abbreviations

Operand	Abbreviation
MODIFY	F

Purpose

The MODIFY MSGMOD (message module) command enables you to specify whether VTAM messages contain an identifier that indicates the VTAM module that originated the message. MSGMOD=YES puts the last five characters of the name of the issuing module immediately after the message identifier. This command overrides the value that was used on the MSGMOD start option.

If the addition of this identifier causes the message text to exceed the maximum allowable message length, the message is truncated on the right, with the possible loss of information. The truncation of messages can be significant (for example, when a display of buffer usage is requested). In this case, the truncated information contains the expansion increment for each buffer pool.

Note: You can use the “MODIFY VTAMOPTS command” on page 422 to perform the same function as this command.

Operands

procname
The procedure name for the command. If *procname* in the START command was specified as *startname.ident*, where *startname* is the VTAM start procedure and *ident* is the optional identifier, either *startname.ident* or *ident* can be specified for *procname*.

If *procname* in the START command was *startname*, *startname* must be specified for *procname*.

MSGMOD
Specifies whether VTAM messages are to contain an issuing-module identifier.

MSGMOD=YES
Causes VTAM messages to contain an issuing-module identifier.

MSGMOD=NO
Causes VTAM messages to not contain an issuing-module identifier.

MODIFY NCP command

```
►►──MODIFY procname,NCP──,ID=ncp_name──,COMMAND=TRSWITCH──,RESNM=resource_name──►◄
```

Abbreviations

Operand	Abbreviation
MODIFY	F
COMMAND	COM, CMD
RESNM	RES, NAME, RESNAME

Purpose

The MODIFY NCP command is used to send a request to NCP to execute the specified command for the specified resource.

Operands

procname
The procedure name for the command. If *procname* in the START command was specified as *startname.ident*, where *startname* is the VTAM start procedure and *ident* is the optional identifier, either *startname.ident* or *ident* can be specified for *procname*.

If *procname* in the START command was *startname*, *startname* must be specified for *procname*.

ID=ncp_name
Specifies an active NCP.

COMMAND
Specifies the command for NCP to execute.

COMMAND=TRSWITCH
Specifies the Token-Ring Path switch request command.

The TRSWITCH command requests NCP to initiate non-disruptive route switch (NDRS) processing for the resource. The resource indicated by the RESNM parameter must be an active NCP Token Ring Interface (NTRI) subarea (PU4) physical unit connected to a 3745 through a bridged network. If no error messages are received at the system console, then VTAM has sent the request to NCP via a SETCV RU. If NCP cannot initiate NDRS processing for the resource, the SETCV command will be rejected and the following message will be displayed at the system console:

```
IST242I SETCV COMMAND FAILED FOR ID = nodename SENSE = code
```

If NCP sucessfully initiates NDRS processing and a route to the physical unit is found, NCP generates a 'Token-Ring Path Switch Notification' Generic Alert. This Alert contains the routing information for the route chosen.

RESNM=resource_name
Specifies the target resource name for the command. It must be a valid resource within the NCP major node indicated by the ID parameter.

MODIFY NEGPOLL command

```
►►──MODIFY procname,NEGPOLL=number_of_responses──,ID=line_name──────────────────►◄
```

Abbreviations

Operand	Abbreviation
MODIFY	F

Purpose

Use this command to request that an NCP change the negative polling limit (the maximum number of consecutive negative polling responses accepted before polling another terminal on the line) for a nonswitched, multipoint line to one or more attached start/stop or BSC terminals.

Operands

procname
The procedure name for the command. If *procname* in the START command was specified as *startname.ident*, where *startname* is the VTAM start procedure and *ident* is the optional identifier, either *startname.ident* or *ident* can be specified for *procname*.

If *procname* in the START command was *startname*, *startname* must be specified for *procname*.

ID=line_name
Specifies the name of a nonswitched multipoint line to one or more attached start/stop or BSC terminals.

NEGPOLL=number_of_responses
Specifies the negative polling limit as a decimal integer 1–255. This is the maximum number of consecutive negative polling responses accepted before polling another terminal on the line specified by the ID operand.

MODIFY NOTNSTAT command

```
►►──MODIFY procname,NOTNSTAT──┬──────────────────────────────────┬──────────────►◄
                              └─,TRLE=──┬─trle_name──────────────┬─┘
                                        │      ┌──────────┐      │
                                        │      ▼          │      │
                                        └─(────trle_name──┴──)───┘
```

Abbreviations

Operand	Abbreviation
MODIFY	F

Purpose

The MODIFY NOTNSTAT (no tuning statistics) command enables you to stop the recording of tuning statistics. Also see the “MODIFY TNSTAT command” on page 391 for more ways to control the recording of tuning statistics. MODIFY NOTNSTAT without the TRLE operand terminates global tuning statistics recording (all devices for which VTAM gathers tuning statistics). MODIFY NOTNSTAT with the TRLE operand only affects those TRLEs specified.

Operands

procname
The procedure name for the command. If *procname* in the START command was specified as *startname.ident*, where *startname* is the VTAM start procedure and *ident* is the optional identifier, either *startname.ident* or *ident* can be specified for *procname*.

If *procname* in the START command was *startname*, *startname* must be specified for *procname*.

TRLE=*trle_name*
Specifies the transport resource list entry name or names for which statistical recording is to be terminated.

Note: Recording is terminated only for those devices within the specified TRLE or TRLEs. If the TRLE operand is not specified, recording is terminated for all devices that collect tuning statistics.

MODIFY NOTRACE command

Stop a buffer contents trace:

```
►►──MODIFY procname,NOTRACE──,TYPE=BUF──,ID=node_name──────────────────────►

   ┌─,IDTYPE=RESOURCE──────┐   ┌─,SCOPE=ONLY──────┐
►──┼──────────────────────┼──┼──────────────────┼──────────────────────────►◄
   └─,IDTYPE=─┬─CP────────┬┘   └─,SCOPE=─┬─ONLY─┬┘
              ├─SSCP──────┤              └─ALL────┘
              └─RESOURCE──┘
```

Stop a communication network management trace:

```
►►──MODIFY procname,NOTRACE──,TYPE=CNM──,ID=─┬─PDPIUBUF─┬──────────────────►◄
                                             └─SAWBUF───┘
```

Stop a user Exit buffer trace:

```
►►──MODIFY procname,NOTRACE──,TYPE=EXIT──,ID=ISTEXCAA──────────────────────►

►─,OPTION=─┬─ALL──────────────────┬──────────────────────────────────────►◄
           ├─option───────────────┤
           ├─(option)─────────────┤
           │      ┌──,──────────┐│
           └─(────▼─┬─ACCTING──┬─┴─)─┘
                    ├─ADJSSCP───┤
                    ├─ALIAS─────┤
                    ├─ALS───────┤
                    ├─BEGIN─────┤
                    ├─END───────┤
                    ├─GWPATH────┤
                    ├─INITAUTH──┤
                    ├─REPL──────┤
                    ├─SECAUTH───┤
                    ├─VRSEL─────┤
                    └─XRF───────┘
```

```
►►──MODIFY procname,NOTRACE──,TYPE=EXIT──,ID=ISTEXCCS──────────────────────►

►─,OPTION=─┬─ALL──────────────────┬──────────────────────────────────────►◄
           ├─option───────────────┤
           ├─(option)─────────────┤
           │      ┌──,──────────┐│
           └─(────▼─┬─BEGIN─────┬─┴─)─┘
                    ├─CONNSTAT──┤
                    ├─DYNA_XID──┤
                    ├─PRED_XID──┤
                    └─END───────┘
```

MODIFY NOTRACE

```
►►──MODIFY procname,NOTRACE──,TYPE=EXIT──,ID=ISTEXCDM──────────────────────►

►─,OPTION=──┬─ALL──────────────────┬──────────────────────────────────────►◄
            ├─option───────────────┤
            ├─(option)─────────────┤
            │      ┌─,──────────┐  │
            │      ▼            │  │
            └─(────┬─BEGIN────┬──┴─)─┘
                   ├─INITAUTH─┤
                   ├─ADS_SEL──┤
                   ├─BN_SEL───┤
                   ├─CDS_SEL──┤
                   ├─CRR_SEL──┤
                   ├─REPL─────┤
                   └─END──────┘
```

Stop a generalized PIU trace:

```
►►──MODIFY procname,NOTRACE──,TYPE=GPT──,ID=node_name──────────────────────►

►─┬─,IDTYPE=RESOURCE──────┬──┬──────────────────────────────────────────►
  │                       │  │
  └─,IDTYPE=──┬─CP────────┬─┴─┴─,ALSNAME=adjacent_link_station_name─┘
              ├─SSCP──────┤
              └─RESOURCE──┘

►─┬─,SCOPE=ONLY──────┬──────────────────────────────────────────────────►◄
  │                  │
  └─,SCOPE=──┬─ONLY─┬─┘
             └─ALL──┘
```

Stop an input/output trace:

```
►►──MODIFY procname,NOTRACE──,TYPE=IO──,ID=node_name────────────────────────►

►─┬─,IDTYPE=RESOURCE──────┬──┬─┬─,SCOPE=ONLY──────┬──┬──────────────────►
  │                       │  │ │                  │  │
  └─,IDTYPE=──┬─CP────────┬─┴─┴─└─,SCOPE=──┬─ONLY─┬─┴─┘
              ├─SSCP──────┤                └─ALL──┘
              └─RESOURCE──┘

►─┬──────────────────────────────────────────────────────────────────────►◄
  │
  └─,──DEVICE──=──┬─ALL──────────────────┬─┘
                  └─hex_device_address───┘
```

Stop a module trace:

```
►►──MODIFY procname,NOTRACE──,TYPE=MODULE──,OPTION=──┬─ALL──────────────────────┬──►◄
                                                     ├─option─────────────────┤
                                                     ├─(option)───────────────┤
                                                     │   ┌─,──────────────┐   │
                                                     │   ▼                │   │
                                                     └─(────┬─COMMAND────┬─)─┘
                                                            ├─CONNECTION─┤
                                                            ├─DEFINITION─┤
                                                            ├─INTERFACES─┤
                                                            ├─MANAGEMENT─┤
                                                            ├─NOEXIT─────┤
                                                            └─SESSION────┘
```

Stop an NCP line trace:

```
►►──MODIFY procname,NOTRACE──,TYPE=LINE──,ID=line_name──────────────────────►◄
```

Stop a 3710 Network Controller line trace:

```
►►──MODIFY procname,NOTRACE──,TYPE=NETCTLR──,ID=pu_name──,LINE=line_name──────►
►─,PU=3710_pu_name──────────────────────────────────────────────────────────►◄
```

Stop a scanner interface trace:

```
►►──MODIFY procname,NOTRACE──,TYPE=SIT──,ID=line_name──────────────────────►◄
```

Stop an SMS (buffer use) trace:

```
                                   ┌─,ID=VTAMBUF─┐
►►──MODIFY procname,NOTRACE──,TYPE=SMS──────────────────────────────────────►◄
```

Stop a resource state trace:

```
►►──MODIFY procname,NOTRACE──,TYPE=STATE──────────────────────────────────►
```

MODIFY NOTRACE

```
►─┬─,ID=node_name─┤ Operands used with ID ├──────────────────────────────►◄
  └─,OPTION=─┬─ALL──────────────────────┬─┘
             ├─option─────────────────┤
             ├─(option)───────────────┤
             │      ┌──,──────────┐    │
             │      ▼             │    │
             └─(────┬─ADJCP──────┬─)──┘
                    ├─APPL───────┤
                    ├─CDRM───────┤
                    ├─CDRSC──────┤
                    ├─GROUP──────┤
                    ├─LINE───────┤
                    ├─LNKST──────┤
                    ├─LU─────────┤
                    ├─NCP────────┤
                    └─PU─────────┘
```

Operands used with ID:

```
┌─┬─,IDTYPE=RESOURCE──────┬─┬──────────────────────────────────────────────┬──────────────────────┤
│ │                       │ │                                              │                      │
└─┴─,IDTYPE=─┬─CP─────────┬─┘ └─,OPTION=─┬─ALL──────────────────────┬─┘                      │
             ├─SSCP───────┤              ├─option─────────────────┤
             └─RESOURCE───┘              ├─(option)───────────────┤
                                         │      ┌──,──────────┐    │
                                         │      ▼             │    │
                                         └─(────┬─ADJCP──────┬─)──┘
                                                ├─APPL───────┤
                                                ├─CDRM───────┤
                                                ├─CDRSC──────┤
                                                ├─GROUP──────┤
                                                ├─LINE───────┤
                                                ├─LNKST──────┤
                                                ├─LU─────────┤
                                                ├─NCP────────┤
                                                └─PU─────────┘
```

Stop a transmission group trace:

```
►►─MODIFY procname,NOTRACE──,TYPE=TG──,ID=line_name──────────────────────►◄
```

Stop a TSO user ID trace:

```
►►─MODIFY procname,NOTRACE──,TYPE=TSO──,ID=tso_user_id──────────────────►◄
```

Stop a VTAM internal trace:

```
                                      ┌─,MODE=INT──────┐
                                      │          (1)   │
►►─MODIFY procname,NOTRACE──,TYPE=VTAM─┤─,MODE=EXT──────┤──────────────────►
                                      │                │
                                      └─,MODE=─┬─INT─┬─┘
                                               └─EXT─┘
```

```
►──┬──────────────
```

Operand	Abbreviation
OPTION=COMMAND	OPT=CMD
OPTION=CONNECTION	OPT=CON
OPTION=DEFINITION	OPT=DEF
OPTION=INTERFACES	OPT=INT
OPTION=MANAGEMENT	OPT=MGMT
OPTION=SESSION	OPT=SES
SCOPE=ALL	EVERY or E
SCOPE=ONLY	NONE

When using an abbreviation in place of an operand, code the abbreviation exactly as shown in the table. For example, when coding the abbreviation for SCOPE=ALL, code only EVERY or E. Do not code SCOPE=E.

Purpose

The MODIFY NOTRACE command stops a specified trace or deletes a trace command that was saved previously with MODIFY TRACE,SAVE=YES. See *z/OS Communications Server: SNA Diagnosis Vol 1, Techniques and Procedures* for a more detailed description of the VTAM trace facilities. See also the *z/OS Communications Server: SNA Resource Definition Reference* and the "MODIFY TRACE command" on page 396.

Operands

procname

The procedure name for the command. If *procname* in the START command was specified as *startname.ident*, where *startname* is the VTAM start procedure and *ident* is the optional identifier, either *startname.ident* or *ident* can be specified for *procname*.

If *procname* in the START command was *startname*, *startname* must be specified for *procname*.

ALSNAME=adjacent_link_station_name

Applies only when TYPE=GPT. It specifies the name of the adjacent link station through which you want to turn off traces. The adjacent link station name must be a PU in an NCP major node or a switched PU connected by an NCP link.

The LU can be traced over multiple connections. To turn off tracing for multiple connections, enter a separate command for each connection.

You do not need to specify the ALSNAME operand if either of the following is true:

- The ALS list has only one entry (and it is not ISTAPNPU). That entry is selected.
- The ALS list has two entries, one of which is ISTAPNPU. The entry other than ISTAPNPU is selected.

The command fails if ISTAPNPU is specified, or if ISTAPNPU is used by default because it is the only entry in the ALS list.

If no ALS list exists for the resource, specify the adjacent link station on the ALSNAME operand.

Use the DISPLAY ID=*lu_name*,SCOPE=ALL command to display all sessions for an independent LU and which adjacent link station list is used for each session.

DEVICE
Applies only when the ID operand is a TRLE that has the DATAPATH operand coded. Use DEVICE to stop input/output trace on OSA-Express devices specified on the DATAPATH operand.

DEVICE=ALL
Specifies to turn off input/output trace on all devices in the DATAPATH list.

DEVICE=*hex_device_address*
Specifies to turn off input/output trace for a specific DATAPATH device.

ID=name
Specifies one of the following:

- When TYPE is **BUF, IO, GPT, LINE, SIT, STATE, or TG**, the ID operand specifies the name of a node for which there is an active trace of the type specified by the TYPE operand.

  For TYPE=BUF, TYPE=IO, TYPE=GPT, or TYPE=STATE, the name can be a network-qualified name. If *name* is an ACB name, and the ACB name matches the name on the APPL definition statement, then you can use a network-qualified ACB name.

  For TYPE=BUF, TYPE=IO, or TYPE=STATE for a CDRM, you can specify a network-qualified name, but this does not remove the restriction that the non-network-qualified CDRM name must be unique across networks.

  For TYPE=BUF, you can specify the name of the internal or external CMIP application program. For the VTAM topology agent, *node_name* is ISTTOPAG. For notification services, *node_name* is ISTNOTIF

  For TYPE=IO, the name can be a TRLE name with OSA-Express.
- When TYPE is **CNM**, the ID operand specifies one of the following:
  - PDPIUBUF, to stop the problem determination PIU buffer trace
  - SAWBUF, to stop the session awareness buffer trace.
- When TYPE is **EXIT**, the ID operand is required and must be specified as ISTEXCAA, ISTEXCCS or ISTEXCDM.
- When TYPE is **MODULE**, the ID operand does not apply.
- When TYPE is **NETCTLR**, the ID operand specifies the physical unit for which the trace is to be stopped. (VTAM is not required to own or know about the IBM 3710 Network Controller). VTAM sends the name of the resource specified on the ID operand to the IBM 3710 Network Controller specified on the PU operand.
- When TYPE is **SMS**, the ID operand is optional and, if specified, is always VTAMBUF.
- When TYPE is **TSO**, the ID operand specifies the name of a TSO user ID for which there is an active trace.
- When TYPE is **VTAM**, the ID operand does not apply.

IDTYPE
Specifies the type of resource that the ID operand names. If several types of resources share the same name, IDTYPE identifies which resource the command should act on. IDTYPE applies when TYPE=BUF, TYPE=IO, TYPE=GPT, or TYPE=STATE.

IDTYPE=CP
Stops tracing for the CP with the name specified on the ID operand. The control point can be the host CP or a CDRSC representing an adjacent CP.

IDTYPE=SSCP
Stops tracing for the SSCP with the name specified on the ID operand.

IDTYPE=RESOURCE
Stops tracing for a CP, an SSCP, or another resource with the name specified on the ID operand. If both an SSCP and a CP are found, VTAM stops tracing for both of them.

LINE=line_name
Applies only when TYPE=NETCTLR. It specifies the name of a link whose trace is to be stopped. This link is attached to the IBM 3710 Network Controller specified on the PU operand. VTAM has no knowledge of this link. VTAM sends the name of the link specified on the LINE operand to the IBM 3710 Network Controller specified on the PU operand.

MODE
Applies only when TYPE=VTAM. It specifies whether to stop internal or external trace recording.

If you do not specify MODE, the requested options are stopped both internally and externally. However, if external tracing is active when the command is issued, external tracing is restarted with the same number of external buffers.

If you turn off tracing for the default trace options, they will be immediately restarted and recorded internally.

The default options are for internal tracing only. In effect, you cannot stop the default options from running internally.

MODE=INT
Stops internal trace recording for the specified options.

MODE=EXT
Stops external trace recording for the specified options.

MODE=EXT is not valid when OPTION=FORCE is specified.

OPTION
Applies to TYPE=EXIT, TYPE=MODULE, TYPE=STATE, and TYPE=VTAM.

For **TYPE=EXIT**, OPTION specifies the functions for which tracing is to be stopped.

If more than one option is selected, separate them with commas and enclose the list in parentheses; for example OPTION=(BEGIN,INITAUTH,ACCTING).

For **TYPE=MODULE**, OPTION specifies the modules for which tracing is to be stopped.

If more than one option is selected, separate them with commas and enclose the list in parentheses; for example OPTION=(COMMAND,SESSION).

For **TYPE=STATE**, OPTION specifies the types of resources for which resource state tracing is to be stopped.

If more than one option is selected, separate them with commas and enclose the list in parentheses; for example OPTION=(APPL,GROUP,NCP).

For **TYPE=VTAM**, OPTION indicates the types of VTAM internal traces to be stopped. For additional information on the OPTION operand, see the “MODIFY TRACE command” on page 396 and the *z/OS Communications Server: SNA*

Resource Definition Reference. For more information about VTAM internal trace options, see the *z/OS Communications Server: SNA Diagnosis Vol 2, FFST Dumps and the VIT*.

If TYPE=VTAM is specified and OPTION is omitted, VTAM issues messages identifying the components for which the internal trace is active, without stopping any active traces.

If more than one option is selected, separate them with commas and enclose the list in parentheses; for example, OPTION=(API,LOCK,SSCP).

The API, CIO, MSG, NRM, PIU, and SSCP VIT options are kept active by VTAM for internal recording (MODE=INT). If you stop them, VTAM immediately restarts them. For external recording (MODE=EXT), there are no default options. You can start or stop any options.

Note: Although the default options are always active, these options do not appear in DISPLAY TRACES output unless you have specified them on the MODIFY TRACE command or the TRACE,TYPE=VTAM start option.

OPTION=ALL
Applies to TYPE=MODULE, TYPE=STATE, and TYPE=VTAM.

For TYPE=MODULE, it stops the tracing of all modules.

For TYPE=STATE, it stops the tracing of all resource types except for those started for a specific resource.

For TYPE=VTAM, it stops all of the internal trace options. Exception trace entries continue to be recorded in the internal trace table. For MODE=INT, OPTION=ALL stops internal recording for all options; however, the default options are restarted immediately. For MODE=EXT, OPTION=ALL stops external trace recording for all options. If you do not specify the MODE, tracing is stopped both internally and externally, but the default options are restarted immediately for MODE=INT.

OPTION=END
Applies to TYPE=VTAM.

- If MODE is not specified, OPTION=END stops both internal and external trace recording and frees the internal trace table (with consequent loss of existing trace data if external recording is not being used). VTAM immediately restarts the default trace options with MODE=INT and the default trace table size.
- If MODE=INT is specified, OPTION=END stops internal trace recording only and frees the internal trace table (with consequent loss of existing trace data if external recording is not being used). VTAM immediately restarts the default trace options with MODE=INT and the default trace table size.
- If MODE=EXT is specified, OPTION=END stops external trace recording only. To stop external recording with OPTION=END, MODE=EXT must be explicitly specified.

For **TYPE=EXIT** where ID=ISTEXCAA, you can also specify the following options:

OPTION=ALL
Stops the tracing of all functions of the session management exit (SME).

OPTION=ACCTING
Stops tracing the initial and final accounting function of the session management exit (SME).

OPTION=ADJSSCP
Stops tracing the adjacent SSCP selection function of the session management exit (SME).

OPTION=ALIAS
Stops tracing the alias translation function of the session management exit (SME).

OPTION=ALS
Stops tracing the adjacent link station function of the session management exit (SME).

OPTION=BEGIN
Stops tracing the begin function of the session management exit (SME).

OPTION=END
Stops the tracing of the END function of the session management exit (SME).

OPTION=GWPATH
Stops tracing the gateway path list function of the session management exit (SME).

OPTION=INITAUTH
Stops tracing the initial authorization function of the session management exit (SME).

OPTION=REPL
Stops tracing the exit replacement function of the session management exit (SME).

OPTION=SECAUTH
Stops tracing the secondary authorization function of the session management exit (SME).

OPTION=VRSEL
Stops tracing the virtual route selection function of the session management exit (SME).

OPTION=XRF
Stops tracing the XRF session switch function of the session management exit (SME).

For **TYPE=EXIT** where ID=ISTEXCCS, you can also specify the following options:

OPTION=ALL
Stops tracing of all functions.

OPTION=BEGIN
Stops tracing the begin function.

OPTION=CONNSTAT
Stops tracing the connection status.

OPTION=DYNA_XID
Stops tracing the XIDs for dynamic PUs function.

OPTION=END
Stops tracing the end function.

OPTION=PRED_XID
Stops tracing the XIDs for predefined PUs function.

For **TYPE=EXIT** where ID=ISTEXCDM, you can also specify the following options:

OPTION=ALL
Stops tracing of all the functions.

OPTION=ADS_SEL
Stops tracing the alternate central directory server selection function.

OPTION=BEGIN
Stops tracing the begin function.

OPTION=BN_SEL
Stops tracing the border node selection function.

OPTION=CDS_SEL
Stops tracing the central directory server selection function.

OPTION=CRR_SEL
Stops tracing the central resource registration selection function.

OPTION=END
Stops tracing the end function.

OPTION=INITAUTH
Stops tracing the initial authorization function.

OPTION=REPL
Stops tracing the exit replacement function

For **TYPE=MODULE**, you can also specify the following options:

OPTION=COMMAND
Stops tracing modules involved in command processing.

OPTION=CONNECTION
Stops tracing modules involved in setting up connections between nodes.

OPTION=DEFINITION
Stops tracing modules involved in resource definition processing.

OPTION=INTERFACES
Stops tracing modules involved in the interface with the host SSCP or the host CP.

OPTION=MANAGEMENT
Stops tracing modules involved in network management.

OPTION=NOEXIT
Specifies that module exits are to be traced for the modules associated with all active OPTION values for TYPE=MODULE. Module exits are traced for all modules until a subsequent MODIFY TRACE,TYPE=MODULE,OPTION=NOEXIT command is issued.

Note: When a MODULE trace is started with OPTION=NOEXIT (either with the TRACE start option or a MODIFY TRACE command), module exits are not traced. Specifying OPTION=NOEXIT on the MODIFY NOTRACE command resumes the tracing of the module exits.

OPTION=SESSION
Stops tracing modules involved in session establishment.

For **TYPE=STATE**, you can also specify the following options:

OPTION=ADJCP
Stops tracing the states of all adjacent control points.

OPTION=APPL
Stops tracing the states of all application programs.

OPTION=CDRM
Stops tracing the states of all CDRMs.

OPTION=CDRSC
Stops tracing the states of all CDRSCs.

OPTION=GROUP
Stops tracing the states of all line groups.

OPTION=LINE
Stops tracing the states of all lines.

OPTION=LNKST
Stops tracing of link stations.

OPTION=LU
Stops tracing the states of all logical units.

OPTION=NCP
Stops tracing the states of all NCPs.

OPTION=PU
Stops tracing the states of all physical units.

For **TYPE=VTAM**, you can also specify the following options:

OPTION=API
Stops tracing the application program interface.

OPTION=APPC
Stops tracing LU 6.2 communication.

OPTION=CFS
Stops tracing coupling facility services.

OPTION=CIA
This option helps isolate problems related to channel I/O. CIA entries are the remaining trace records from the CIO option.

OPTION=CIO
Stops tracing channel I/O for channel-attached devices and for lines attached to a communication adapter.

OPTION=CMIP
Stops tracing internal events in CMIP services and the VTAM topology agent.

OPTION=CSM
Stops tracing the communications storage manager.

OPTION=ESC
Stops tracing the execution sequence control.

OPTION=HPR
Stops tracing for HPR.

OPTION=LCS
Stops tracing LAN channel stations.

OPTION=LOCK
Stops tracing locks

OPTION=MSG
Stops tracing messages.

OPTION=NRM
Stops tracing network resource management.

OPTION=PIU
Stops tracing path information units.

OPTION=PSS
Stops tracing process scheduling services.

OPTION=SMS
Stops tracing storage management services.

OPTION=SSCP
Stops tracing the system services control point.

OPTION=TCP
Stops tracing the VTAM to TCP/IP interface events. This option is used only with the AnyNet function.

OPTION=VCNS
Stops tracing VTAM common network services.

OPTION=XBUF
Stops tracing of extended buffer list information.

OPTION=XCF
Stops tracing XCF communication.

OPTION=FORCE
Stops trace recording if it apppears that a previous MODIFY NOTRACE,OPT=ALL or END command did not complete. Use OPTION=FORCE only if your attempt to use OPTION=END appears to have failed. VTAM immediately restarts the default trace options with MODE=INT and the default trace table size.

Note: OPTION=FORCE may cause ABENDs for applications that are in a hung condition.

OPTION=FORCE is not valid when MODE=EXT is specified. If OPTION=FORCE is specified without the MODE operand, external tracing is stopped and all external buffers are freed.

PU=3710_pu_name
Applies only when TYPE=NETCTLR. It specifies the 3710 physical unit performing the trace to be stopped. VTAM rejects the command if the physical unit is not active to this VTAM (SSCP).

SCOPE
Specifies the scope of the trace. It applies when TYPE=BUF or TYPE=IO. You can also specify the SCOPE operand for TYPE=GPT, but it is meaningful only for the NCP node. SCOPE=ALL is assumed for a GPT trace of all other node types.

SCOPE=ALL
Stops traces for any nodes subordinate to the node specified. SCOPE=ALL

is not valid for the host PU trace or for the host intermediate routing node trace (ID=ISTIRN). If SCOPE=ALL is specified, VTAM issues a message and uses SCOPE=ONLY instead.

If the specified node is a model application, SCOPE=ALL turns off the trace option for the model application and stops traces for all existing dynamic applications created using the model. Traces will not be started for future dynamic applications created using the model.

SCOPE=ONLY
Stops a trace only for the specified node.

If the specified node is a model application, SCOPE=ONLY turns off the trace option or the model application. Traces for all existing dynamic applications created using the model are unaffected. Traces will not be started for future dynamic applications created using the model.

SUBTRACE
Specifies that SUBTRACE can be used to turn off a subset of trace entries under a trace option. Currently, two SUBTRACE types are defined; subtrace TREE is defined under the SSCP trace option and subtrace ARBP is defined under the HPR trace option.

SUBTRACE=ARBP
Specifies that OPTION=HPR or OPTION=ALL must be specified when SUBTRACE=ARBP.

SUBTRACE=TREE
Specifies that OPTION=SSCP or OPTION=ALL must be specified when SUBTRACE=TREE.

TYPE
Specifies the kind of trace that is to be stopped. Each trace must be stopped with a separate MODIFY NOTRACE command.

TYPE=BUF
Stops the tracing of text that passes through VTAM buffers on the way to or from the node indicated by the ID operand. The SCOPE=ALL operand can be used to extend the scope of the trace to all nodes subordinate to the specified node.

TYPE=CNM
Stops a communication network management trace.

TYPE=EXIT
Stops the tracing of functions of the session management exit (SME).

TYPE=GPT
Stops an NCP generalized PIU trace for the resources specified by the ID operand.

Note: The ID operand of MODIFY NOTRACE cannot specify:
- An NCP switched line that is a switched subarea connection
- A dynamic CDRSC

TYPE=IO
Stops a trace of I/O activity associated with the node specified on the ID operand. The SCOPE=ALL operand can be used to extend the scope of the trace to all nodes subordinate to the specified node. Also, for an NCP major node with an active channel attachment, the SCOPE=ALL operand terminates any active channel I/O trace.

Note: The external VIT is now used to record the IO trace entries. The previously used IO trace is no longer available. PIU, NLPI, NLPO, LSNA, and MPTNFMT entries may be written for a specific IO trace invocation. When the last IO trace is terminated, the external VIT remains active. You must explicitly turn the VIT off.

TYPE=LINE
Stops an NCP line trace for the line specified by the ID operand. Note that specifying TYPE=LINE stops any transmission group trace that was started using the same line name.

TYPE=MODULE
Stops module tracing for the options specified on the OPTION operand.

TYPE=NETCTLR
Stops the IBM 3710 Network Controller line trace for the physical unit named on the PU operand.

TYPE=SIT
Stops a scanner interface trace (SIT) of the communication scanner processor in the IBM 3720 or 3745 Communication Controller.

TYPE=SMS
Stops a storage management services (SMS) trace that is recording VTAM buffer pool usage data.

TYPE=STATE
Stops resource state tracing. If the ID operand is specified, state tracing is stopped for that resource only. If the OPTION operand is specified, state tracing is stopped for those resource types specified.

TYPE=TG
Stops an NCP transmission group trace for the transmission group containing the line specified by the ID operand.

TYPE=TSO
Stops a TSO component trace for the user ID specified by the ID operand.

TYPE=VTAM
Stops the VTAM internal trace (VIT) for the components specified by the OPTION operand. If OPTION is omitted, no internal traces are stopped; rather, VTAM issues messages identifying the components for which the internal trace is currently active.

MODIFY POLL command

```
►►──MODIFY procname,POLL=number_of_seconds──,ID=line_name──────────────────────►◄
```

Abbreviations

Operand	Abbreviation
MODIFY	F

Purpose

You can use this command to request that an NCP change the polling delay (the time delay between polling sequences) for a nonswitched, polled line to one or more attached BSC IBM 3270 terminals.

Operands

procname
The procedure name for the command. If *procname* in the START command was specified as *startname.ident*, where *startname* is the VTAM start procedure and *ident* is the optional identifier, either *startname.ident* or *ident* can be specified for *procname*.

If *procname* in the START command was *startname*, *startname* must be specified for *procname*.

ID=line_name
Specifies the name of a nonswitched, polled line to one or more attached BSC IBM 3270 terminals.

POLL=number_of_seconds
Specifies the polling delay in seconds. This is the time delay between polling sequences on the line specified by the ID operand. Specify the number of seconds as an integer in the range 0–255.

MODIFY PPOLOG command

```
►►──MODIFY procname,PPOLOG=──┬─YES─┬──────────────────────────────────►◄
                             └─NO──┘
```

Abbreviations

Operand	Abbreviation
MODIFY	F

Purpose

Use the MODIFY PPOLOG command to request that VTAM start or stop sending copies of VTAM operator commands and VTAM messages to the primary program operator (PPO).

If the PPOLOG option is in effect, messages that were suppressed by the MODIFY SUPP command or the SUPP start option are still sent to the primary program operator, even though those messages do not appear on the system console.

PPOLOG is supported by the Tivoli NetView for z/OS. Use of this command requires the system to have a primary program operator such as the Tivoli NetView for z/OS, and requires that the primary program operator can support the option.

Note: You can use the “MODIFY VTAMOPTS command” on page 422 to perform the same function as this command.

Operands

procname
The procedure name for the command. If *procname* in the START command was specified as *startname.ident*, where *startname* is the VTAM start procedure and *ident* is the optional identifier, either *startname.ident* or *ident* can be specified for *procname*.

If *procname* in the START command was *startname*, *startname* must be specified for *procname*.

PPOLOG
Specifies whether to send copies of VTAM operator commands and messages to the PPO for logging.

PPOLOG=YES
Sends copies of all VTAM operator commands received from the system console, and copies of all VTAM messages that have been written to the system console.

PPOLOG=NO
Stops sending copies of all VTAM operator commands received from the system console, and copies of all VTAM messages that have been written to the system console.

MODIFY PROFILES command

```
►►──MODIFY procname,PROFILES──,ID=appl_name──────────────────────────────►◄
```

Abbreviations

Operand	Abbreviation
MODIFY	F

Purpose

The MODIFY PROFILES command refreshes an active application's set of RACF® profiles. This command updates the profiles in storage to reflect changes made by the security administrator to the RACF profiles.

Note: The profile changes affect only those sessions that are started after the command is executed. Active sessions are not affected. Pending sessions might be terminated if the profile or the LU-LU password is deleted or changed for a partner LU. To prevent such an error, it is recommended that this command not be invoked if any active or pending sessions between the application program and its partner LUs would be affected by a profile change. See the *z/OS Communications Server: SNA Programmer's LU 6.2 Guide* for more information on LU 6.2 application program security.

Operands

procname
The procedure name for the command. If *procname* in the START command was specified as *startname.ident*, where *startname* is the VTAM start procedure and *ident* is the optional identifier, either *startname.ident* or *ident* can be specified for *procname*.

If *procname* in the START command was *startname*, *startname* must be specified for *procname*.

ID=appl_name
Specifies the name of an active application that has VERIFY=OPTIONAL or VERIFY=REQUIRED specified on its APPL statement. This operand is required.

MODIFY QUERY command

Purpose

The MODIFY QUERY command can be issued only from a program operator application.

The MODIFY QUERY command allows a program operator application to communicate with a tuning facility such as the NTune program. For more information about this command, refer to *z/OS Communications Server: SNA Programming*.

MODIFY RESOURCE command

Modify the DLOGMOD value for a resource:

```
►►──MODIFY procname,RESOURCE──,ID=resource_name──,DLOGMOD=──┬──────────────────────┬──►◄
                                                            └─logon_mode_name──────┘
```

Add or change the ADJLIST value for a cross-domain resource:

```
►►──MODIFY procname,RESOURCE──,ID=resource_name──,ADJLIST=list_name──────────────►
►─,ACTION=UPDATE──────────────────────────────────────────────────────────────────►◄
```

Delete the ADJLIST value for a cross-domain resource:

```
►►──MODIFY procname,RESOURCE──,ID=resource_name──,ADJLIST=list_name──────────────►
►─,ACTION=DELETE──────────────────────────────────────────────────────────────────►◄
```

Change the error message display option for an APPL or CDRSC:

```
►►──MODIFY procname,RESOURCE──,ID=resource_name──,SIRFMSG=──┬─OLUSSCP──┬──────────►◄
                                                            ├─ALLSSCP──┤
                                                            ├─STARTOPT─┤
                                                            └─NONE─────┘
```

Change the delay timer for disconnection of a switched PU:

```
►►──MODIFY procname,RESOURCE──,ID=resource_name──,DISCNTIM=time_period──────────►◄
```

Change the number of search requests for a resource:

```
►►──MODIFY procname,RESOURCE──,ID=resource_name──────────────────────────────────►
►─,SRCOUNT=number_of_search_requests──────────────────────────────────────────────►◄
```

Change the value of the search reduction timer for a resource:

```
►►──MODIFY procname,RESOURCE──,ID=resource_name──,SRTIMER=number_of_seconds──────►◄
```

Reset the search reduction entry for a resource:

```
►►──MODIFY procname,RESOURCE──,ID=resource_name──,SRCLEAR=YES──────────────────►◄
```

Modify the registration value for a resource:

```
►►──MODIFY procname,RESOURCE──,ID=resource_name──,REGISTER=┬─CDSERVR─┬──────────►◄
                                                           ├─NETSRVR─┤
                                                           └─NO──────┘
```

Modify the ASRCVLM value for an application program:

```
►►──MODIFY procname,RESOURCE──,ID=resource_name──,ASRCVLM=amount_of_storage──────►◄
```

Modify the MODSRCH value for a model application program:

```
►►──MODIFY procname,RESOURCE──,ID=resource_name──,MODSRCH=┬─FIRST─┬──────────────►◄
                                                          ├─LAST──┤
                                                          └─NEVER─┘
```

Modify the VTAMTOPO value for a reporting status:

```
►►──MODIFY procname,RESOURCE──,ID=resource_name──,VTAMTOPO=┬─REPORT───┬──────────►◄
                                                           ├─NOREPORT─┤
                                                           ├─NOLLINES─┤
                                                           ├─NOSWPUS──┤
                                                           ├─INCLUDE──┤
                                                           └─IGNORE───┘
```

Abbreviations

Operand	Abbreviation
MODIFY	F
DLOGMOD	DLOG

Purpose

The MODIFY RESOURCE command allows you to perform the following changes for an individual resource:

- Change the current value of the DLOGMOD operand of a definition statement for an LU, application program, or cross-domain resource without deactivating the entire major node.
- Modify the reporting status for a resource.
- Add, replace, or delete the current value of the ADJLIST operand of a definition statement for a cross-domain resource.
- Change the setting of the error message display value for an APPL or CDRSC resource.
- Change the delay timer for disconnection of a switched PU.
- Modify search reduction information for existing CDRSCs and APPN directory entries.
- Modify the registration value for a resource.
- Change the current value of the ASRCVLM operand coded on the APPL definition statement.
- Change the current value of the MODSRCH operand coded on the APPL definition statement.

When VTAM receives the MODIFY RESOURCE command, it overlays the existing value for the specified operand with the new value.

Operands

procname
The procedure name for the command. If *procname* in the START command was specified as *startname.ident*, where *startname* is the VTAM start procedure and *ident* is the optional identifier, either *startname.ident* or *ident* can be specified for *procname*.

If *procname* in the START command was *startname*, *startname* must be specified for *procname*.

ACTION
Specifies whether VTAM is to add, update, or delete the name of the adjacent SSCP list for a cross-domain resource.

ACTION is valid only with the ADJLIST and ID operands.

ACTION=DELETE
Deletes the name of the current adjacent CDRM list for the cross-domain resource specified on the ID operand. Routing after the successful completion of this command will not use ADJLISTs. Existing sessions are not affected by this command.

ACTION=UPDATE
Adds a name of an adjacent CDRM list or replaces the name of the current adjacent CDRM list for the cross-domain resource specified on the ID operand. Routing after the successful completion of this command will use the specified list.

ADJLIST=list_name
Specifies the value of the adjacent CDRM list for the cross-domain resource specified on the ID operand. If ACTION=UPDATE, the list_name must match the name on an ADJLIST definition statement for subsequent routing to be successful.

Note: The ADJLIST operand is not valid in a pure APPN node. The MODIFY RESOURCE command will fail with an indication that ADJLIST is ignored. A pure APPN node is a VTAM that is started with start options NODETYPE=NN or NODETYPE=EN, but without HOSTSA or with HOSTSA and SACONNS=NO.

ADJLIST is only valid with the ACTION and ID operands.

ASRCVLM=amount_of_storage
Specifies an amount of the data space storage associated with this application that is used by VTAM to calculate constrained and critical threshhold values for the data space. These constrained and critical threshhold values affect the way adaptive session pacing operates with session partners. High usage periods of data space storage should be considered when setting this value.

The range is 0–99 999 999. If you specify 0, the amount of data space storage used is 1 000 000 bytes.

DISCNTIM=time_period
Specifies the amount of time that VTAM delays deactivation of the SSCP-PU session when there are no outstanding LU-LU session requests.

You can specify the time in seconds (S). Specify the number of seconds as an integer in the range 5–65535.

DISCNTIM is valid only for PU types 2 and 2.1 that have DISCNT=DELAY specified on the PU definition statement.

DISCNTIM is only valid with the ID operand.

DLOGMOD=logon_mode_name
Specifies the new value for the logon mode. If DLOGMOD is specified with a null value (left blank), the predefined DLOGMOD value is deleted.

DLOGMOD is only valid with the ID operand

Note: If DLOGMOD is specified with an unknown logon mode, a warning message is issued indicating that it is unknown and the change is accepted.

ID=resource_name
Specifies the name of the resource to which the command applies. If you specify ADJLIST, the resource name must specify a cross-domain resource.

The name can be a network-qualified name. If the name specified on the ID operand is network-qualified, this name is considered to be the real name of the resource.

Note: If the resource name is a cross-network CDRSC which is defined with NQNMODE=NQNAME (either by definition statement or start option), be sure to use its network-qualified name on this command.

MODSRCH
Specifies when the INQUIRE APPSTAT and INQUIRE STATUS macroinstructions will search for a model application definition. The VTAM containing the application that issued the INQUIRE first searches its tables for a previously defined application. If one is not found, it searches for a model that can satisfy the request.

Note: If you plan to use the TSO/VTAM BASENAME parameter, then you must code MODSRCH=FIRST on the TSO application definition statement which represents the subordinate TSO APPLs. For more information on MODSRCH, refer to *z/OS Communications Server: SNA Network Implementation Guide*

MODSRCH=FIRST
Specifies that VTAM search for a model definition before searching the network for the specified name. For example, because the OPEN ACB macroinstruction can use a model definition, you could specify MODSRCH=FIRST for an application issuing INQUIRE APPSTAT to determine if an OPEN ACB will follow.

MODSRCH=LAST
Specifies that VTAM search for a model definition only if all other hosts in the network report that the application was not found.

MODSRCH=NEVER
Specifies that VTAM search only for the name specified on the INQUIRE macroinstruction.

REGISTER
Indicates that the registration value of the resource should be changed and a registration request might be initiated. This command can only be issued from the resource's real or surrogate owner.

REGISTER=CDSERVR
Specifies that the resource is to be registered to the network node server and the central directory server (CDS).

REGISTER=NETSRVR
Specifies that the resource is to be registered to its network node server only. If the resource is currently registered to the central directory server, the registration is not deleted.

REGISTER=NO
Specifies that the resource should not be registered. If the resource is currently registered to a network node server, a request to delete the registration is sent to the network node server. If the resource is currently registered to the central directory server, the registration is not deleted.

SIRFMSG
Specifies SIRFMSG values for the resource.

SIRFMSG=ALLSSCP
Specifies that messages are issued for all session initiation request failures involving this resource.

SIRFMSG=OLUSSCP
Specifies that messages are issued only when the VTAM owning this resource is the origin logical unit (OLU) SSCP.

SIRFMSG=START
Specifies that the value of the SIRFMSG start option is to be used for this resource. This is the default setting.

SIRFMSG=NONE
Specifies that no messages are issued for any searches involving this resource.

SRCLEAR=YES
Specifies that the search reduction entry should be reset for this resource. This operand does not affect the SRTIMER or SRCOUNT values for subsequent entries. The resource is verified when the next request is received. If the resource cannot be reached, a new search reduction entry is created.

SRCLEAR is valid only with the ID, SRCOUNT, and SRTIMER operands.

SRCOUNT=number_of_search_requests
Specifies the new number of search requests that are limited due to a search reduction entry before another search is attempted. The value for this operand is 0–65535.

Note: This operand applies only to existing CDRSCs and APPN directory entries.

SRCOUNT is valid only with the ID, SRCLEAR, and SRTIMER operands.

SRTIMER=number_of_seconds
Specifies the new number of seconds that a search reduction entry limits incoming search requests or session requests. The value for this operand is 0–65535.

Note: This operand applies only to existing CDRSCs and APPN directory entries.

SRTIMER is valid only with the ID, SRCLEAR, and SRCOUNT operands.

VTAMTOPO
Specifies the new reporting status for a resource. The following are the values allowed for this operand.

VTAMTOPO=REPORT
Specifies that the VTAM topology agent reports resources.

VTAMTOPO=NOREPORT
Specifies that the VTAM topology agent does not report resources.

VTAMTOPO=NOLLINES
Specifies that the VTAM topology agent does not report switched logical lines.

VTAMTOPO=NOSWPUS
Specifies that the VTAM topology agent does not report connected switched PUs, except for those switched PUs which have VTAMTOPO=REPORT explicitly coded or specified under the switched major node.

VTAMTOPO=INCLUDE
Specifies that the VTAM topology agent reports all resources, regardless of the reporting status of the subordinate resources.

VTAMTOPO=IGNORE
Specifies that the VTAM topology agent does not report resources, regardless of the reporting status of the subordinate resources.

MODIFY RTP command

```
►►──MODIFY procname,RTP──,ID=rtp_pu_name──────────────────────────────────►◄
```

Abbreviations

Operand	Abbreviation
MODIFY	F

Purpose

The MODIFY RTP command causes VTAM to search for the best high performance routing (HPR) route, based on transmission group weight, between the two endpoints of a rapid transport protocol (RTP) connection. If a better route is found, the connection is switched to the better route. If the current route is the best route, a path switch still occurs, but the switch is made to the same route.

Operands

procname
The procedure name for the command. If *procname* in the START command was specified as *startname.ident*, where *startname* is the VTAM start procedure and *ident* is the optional identifier, either *startname.ident* or *ident* can be specified for *procname*.

If *procname* in the START command was *startname*, *startname* must be specified for *procname*.

ID=rtp_pu_name
Specifies the name of a PU that represents a rapid transport protocol (RTP) route. The PU name must begin with “CNR”. This operand is required.

MODIFY SECURITY command

Increase the cryptography specification for an LU:

```
►►──MODIFY procname,SECURITY──,ID=lu_name──,ENCR=──┬─COND─┬──────────────────────►
                                                   ├─OPT──┤
                                                   └─REQD─┘

                  (1)
  ┌─ENCRTYPE=DES──────┐
►─┤                    ├──────────────────────────────────────────────────────────►◄
  └─ENCRTYPE=TDES24────┘
```

Notes:

1 ENCRTYPE can not be downleveled. If the current value is TDES24, MODIFY SECURITY ENCRTYPE=DES will not be allowed.

Modify which cryptographic key name is used for an LU:

```
►►──MODIFY procname,SECURITY──,ID=lu_name──,CKEY=──┬─ALTERNATE─┬──────────────►◄
                                                   └─PRIMARY───┘
```

Initiate SLU authentication for an LU:

```
►►──MODIFY procname,SECURITY──,ID=lu_name──,CERTIFY=YES──────────────────────►◄
```

Increase the message authentication specification for an LU:

```
►►──MODIFY procname,SECURITY──,ID=lu_name──,MAC=──┬─COND─┬──────────────────────►
                                                  └─REQD─┘

►─┬──────────────────────────────────────────────────────────────────────────┬──►◄
  └─,MACTYPE=──┬─CRC──┬──────────────┬──┬──┬──
```

Purpose

The MODIFY SECURITY command is a superset of the MODIFY ENCR command. This command allows you to change the cryptographic and the message authentication requirements for application program logical units and device-type logical units.

Operands

procname
The procedure name for the command. If *procname* in the START command was specified as *startname.ident*, where *startname* is the VTAM start procedure and *ident* is the optional identifier, either *startname.ident* or *ident* can be specified for *procname*.

If *procname* in the START command was *startname*, *startname* must be specified for *procname*.

CERTIFY=YES
Indicates that SLU authentication (verifying that the SLU is using the same cryptographic key as the PLU) is to be performed by the PLU, if encryption is being used.

CKEY
Indicates whether VTAM is to use the primary or alternate cryptographic key name to generate cryptographic session keys for this logical unit.

This indicator is initialized to PRIMARY, and cannot be explicitly set with the LU definition statement. If you do not specify CKEY, the current CKEY value is unchanged.

CKEY only affects the secondary logical unit (SLU) key; it does not affect the cross domain (CP/SSCP) keys.

CKEY=ALTERNATE
Specifies that VTAM use the alternate cryptographic key name to generate cryptographic session keys. The alternate name is either the name on the LU definition statement or the value of the CKEYNAME operand with the suffix **.ALT**. For example, `name`.ALT.

CKEY=PRIMARY
Specifies that VTAM use the primary cryptographic key name to generate cryptographic session keys. The primary name is either the name on the LU definition statement or the value of the CKEYNAME operand.

ENCR
Specifies the new cryptography specifications of the logical unit.

Note: The level of the cryptography specification can only be raised. Any attempt to lower the level is rejected. The new level is effective for all future sessions involving the logical unit; existing active or pending sessions are not affected.

ENCR=OPT
Raises the level of the logical unit's cryptography specification from no cryptography to optional (capable of cryptography).

ENCR=COND
Raises the level of the logical unit's cryptography specification from no cryptography or optional to required (that is, all user sessions must be encrypted) if both sides support encryption. If the session partner does not

support encryption, the session does not fail; instead, a session is established with no encryption of data.

ENCR=REQD
Raises the level of the logical unit's cryptography specification from no cryptography or optional (or selective or conditional for application programs) to required (that is, all user sessions must be encrypted).

ENCRTYPE
Specifies the minimum type of encryption that VTAM should use on behalf of the logical unit when performing session level encryption. The new ENCRTYPE level is effective for all subsequent sessions involving the logical unit; currently active or pending sessions are not affected.

ENCRTYPE=DES
Specifies that VTAM must use a minimum of DES encryption with an 8–byte key when performing session level encryption. This is the default.

Note: If the current value of ENCRTYPE=TDES24, then ENCRTYPE=DES will not be allowed.

ENCRTYPE=TDES24
Specifies that VTAM must use a minimum of Triple_DES encryption with a 24–byte key performing session level encryption.

Note: When the DES method of message encryption (MACTYPE=DES) is also in use for this application or LU, the encryption type used as part of the message authentication logic is determined by the ENCRTYPE keyword. The ENCRTYPE keyword defaults to DES and this is the current type of encryption VTAM uses in message authentication today. However, if ENCRTYPE=TDES24, message authentication will use a minimum of Triple-DES with 24–byte key when calculating the MAC code.

ID=*lu_name*
Specifies the name of the LU whose security specification you want to change.

The ID must represent the type of LU that can be modified by the remaining operands:

CKEY Device-type LU
ENCR Application program or device-type LU
ENCRTYPE
Application program or device-type LU
MAC Application program LU
MACTYPE
Application program LU
MACLNTH
Application program LU

MAC
Specifies the new message authentication specifications for the logical unit (application program or device). The value you specify must be higher than the current value. Any attempt to lower the level is rejected.

MAC values, in ascending order, are:
- NONE
- COND (conditional)
- REQD (required)

The new MAC level is effective for all subsequent sessions involving the logical unit; currently active or pending sessions are not affected. If you do not specify the MAC operand, the current MAC value is unchanged.

MAC=COND
Raises the level of the application program message authentication specifications from NONE to COND (conditional); that is, if the session partners are MAC capable, each side uses message authentication codes. If one session partner does not support the function, the session does not fail; instead, a session is established but without any message authentication of data.

MAC=REQD
Raises the level of the message authentication specification of an application program or logical unit from NONE or conditional (COND), to required; that is, all user sessions must use message authentication codes.

MACLNTH
Specifies the minimum length, in bytes, of the message authentication code that is to be generated. For MACTYPE=DES, valid values are 4, 6, or 8. For MACTYPE=CRC, valid values are 2 or 4.

MACTYPE
Specifies the method to use when message authentication codes are created and checked.

MACTYPE=CRC
Specifies that an internal VTAM service is used to create a cyclic redundancy check (CRC) for data on the specified conversation.

MACTYPE=DES
Specifies that VTAM uses message authentication code services as provided in the Common Cryptographic Architecture (CCA) specification. The message authentication code calculation support is described in the ANSI X 9.9 standard.

MODIFY SESSION command

```
►►──MODIFY procname,SESSION=number_of_sessions──,ID=line_name──────────────────►◄
```

Abbreviations

Operand	Abbreviation
MODIFY	F

Purpose

You can use the MODIFY SESSION command to request that an NCP change the session limit (the maximum number of concurrent line scheduling sessions allowed) for a nonswitched multipoint line to one or more attached start/stop or BSC terminals. This limit does not become effective until the number of sessions now in operation falls below the new limit.

Notes:

1. The session limit should not exceed the number of devices on the line. If the line has IBM 3270 terminals attached, the session limit should be the total number of cluster controllers and terminals on the line.
2. This command does not activate resources. To do this, the appropriate resource must be activated (for example, by using the VARY ACT command).

Operands

procname
The procedure name for the command. If *procname* in the START command was specified as *startname.ident*, where *startname* is the VTAM start procedure and *ident* is the optional identifier, either *startname.ident* or *ident* can be specified for *procname*.

If *procname* in the START command was *startname*, *startname* must be specified for *procname*.

ID=line_name
Specifies the name of a nonswitched multipoint line to one or more attached start/stop or BSC terminals.

SESSION=number_of_sessions
Specifies the session limit as a decimal integer 1–255. This is the maximum number of concurrent line scheduling sessions allowed on the line specified by the ID operand.

MODIFY SUPP command

```
►►──MODIFY procname,SUPP=──┬─NOSUP─┬──────────────────────────────────►◄
                           ├─INFO──┤
                           ├─WARN──┤
                           ├─NORM──┤
                           └─SER───┘
```

Abbreviations

Operand	Abbreviation
MODIFY	F

Purpose

The MODIFY SUPP (suppression) command allows you to change the message suppression level after VTAM has been started.

Note that some error messages, such as those indicating abnormal termination of a task, are classified as “insuppressible” and cannot be suppressed. Other messages that cannot be suppressed include those requiring a response from the VTAM operator (messages that end in “A”) and those resulting from the operator’s status inquiries (messages resulting from a DISPLAY command). See *z/OS Communications Server: SNA Messages* for a definition of these message categories and the classifications of specific VTAM messages.

If the PPOLOG option is in effect, messages that are suppressed by the MODIFY SUPP command or the SUPP start option are still sent to the primary program operator, even though those messages do not appear on the system console.

Also see *z/OS Communications Server: SNA Messages* for information on message flooding.

Notes:

1. Issuing a MODIFY SUPP command prevents specific messages from being issued by VTAM. Prior to issuing the command, make sure you understand the potential effects on NetView command lists and any automated operation facilities in your network.
2. Message suppression might prevent message IST223I (indicating the completion of the MODIFY SUPP command) from being issued by VTAM.
3. You can use the “MODIFY VTAMOPTS command” on page 422 (SUPP operand) to perform the same function as this command.

Operands

procname

The procedure name for the command. If *procname* in the START command was specified as *startname.ident*, where *startname* is the VTAM start procedure and *ident* is the optional identifier, either *startname.ident* or *ident* can be specified for *procname*.

If *procname* in the START command was *startname*, *startname* must be specified for *procname*.

SUPP

Specifies the suppression level for VTAM messages. The following list shows suppression level in the order of severity from least to most.

SUPP=NOSUP

Specifies that no VTAM messages are to be suppressed.

SUPP=INFO

Specifies that only those VTAM messages classified as informational messages are to be suppressed.

SUPP=WARN

Specifies that those VTAM messages classified as warning messages, as well as informational messages, are to be suppressed.

SUPP=NORM

Specifies that those VTAM messages classified as normal messages, as well as warning and informational messages, are to be suppressed.

SUPP=SER

Specifies that those VTAM messages classified as serious error messages, as well as normal, warning, and informational messages, are to be suppressed.

MODIFY TABLE command

Change resource associations:

```
►►──MODIFY procname,TABLE──,OPTION=ASSOCIATE──────────────────────────►

►─,TYPE=──┬─┬─ASSTAB──┬─,ID=name,OLDTAB=──┬─*──────────────┬──────────►
          │ │─FLDTAB──│                   └─old_table_name─┘
          │ │─LOGTAB──│
          │ │─MDLTAB──│
          │ │─MODETAB─│
          │ └─USSTAB──┘
          └─COSTAB,NETID=netid,ORIGIN=ncp_name──────────────┘

►─,NEWTAB=new_table_name──────────────────────────────────────────────►◄
```

Delete resource associations:

```
►►──MODIFY procname,TABLE──,OPTION=DELETE─────────────────────────────►

►─,TYPE=──┬─┬─ASSTAB──┬─,ID=name,OLDTAB=──┬─*──────────────┬──────────►◄
          │ │─FLDTAB──│                   └─old_table_name─┘
          │ │─LOGTAB──│
          │ │─MDLTAB──│
          │ │─MODETAB─│
          │ └─USSTAB──┘
          ├─COSTAB,NETID=netid,ORIGIN=ncp_name──────────────┤
          └─FILTER──────────────────────────────────────────┘
```

Load a replacement table (other than a filter table):

```
►►──MODIFY procname,TABLE──,OPTION=LOAD──,NEWTAB=new_table_name───────►

►──┬──────────────────────────────┬──────────────────────────────────►◄
   └─,OLDTAB=old_table_name───────┘
```

Load a replacement filter table:

```
►►──MODIFY procname,TABLE──,OPTION=LOAD──,TYPE=FILTER──,NEWTAB=new_table_name──►◄
```

Load an updated directory definition file:

```
►►──MODIFY procname,TABLE──,OPTION=LOAD──,TYPE=CMIPDDF──────────────►◄
```

Abbreviations

Operand	Abbreviation
MODIFY	F
NETID=name	NET=name
NEWTAB=name	NEW=name
OLDTAB=name	OLD=name

Operand	Abbreviation
OPTION	OPT
OPTION=ASSOCIATE	OPT=ASSOC
OPTION=DELETE	OPT=DEL
TYPE=ASLTAB	TYPE=ASL
TYPE=COSTAB	TYPE=COS
TYPE=FLDTAB	TYPE=FLD
TYPE=LOGTAB	TYPE=LOG
TYPE=MDLTAB	TYPE=MDL
TYPE=MODETAB	TYPE=MODE
TYPE=USSTAB	TYPE=USS

When using an abbreviation in place of an operand, code the abbreviation exactly as shown in the table. For example, when coding the abbreviation for OPTION=DELETE, code only OPT=DEL. Do not code OPTION=DEL.

Purpose

The MODIFY TABLE command dynamically loads VTAM tables, changes VTAM table associations, or both. This command also disassociates resources from tables. MODIFY TABLE does **not** affect existing sessions with the resource named on the ID operand or its subordinate nodes. Only new sessions established after this command is issued are affected. The MODIFY TABLE command supports the following types of tables:

- Associated LU
- Class of Service
- CMIP services directory definition file
- Interpret
- Logon mode
- Message-flooding prevention
- Model name
- Session awareness data filter
- USS

Note: Do not use the MODIFY TABLE command for the APPN Class of Service definitions. Use the VARY ACT command to activate the file containing the updated definitions.

The MODIFY TABLE command does not change the value of the DLOGMOD operand. To change the value of the DLOGMOD operand, see the “MODIFY DEFAULTS command” on page 300 or the “MODIFY RESOURCE command” on page 368.

The MODIFY TABLE command can end unsuccessfully if the table being loaded is partially or entirely contained in new extents (data spaces where information is stored) within VTAMLIB. Because VTAMLIB is opened once during VTAM initialization, the table is not accessible until VTAM is halted, restarted, and VTAMLIB is opened again.

The MODIFY TABLE command performs several functions, depending on the values you specify on the OPTION and TYPE operands.

- F TABLE,OPT=ASSOC

Allows you to change all references to *old_table_name* to refer to *new_table_name* for resource *name* and its subordinate nodes. If necessary, *new_table_name* is loaded. Values for *old_table_name* include:
- Logmode table (TYPE=MODETAB)
- USS table (TYPE=USSTAB)
- Interpret table (TYPE=LOGTAB)
- Associated LU table (TYPE=ASLTAB)
- Message-flooding prevention table (TYPE=FLDTAB)
- Model name table (TYPE=MDLTAB)

- F TABLE,OPT=ASSOC,TYPE=COS

  Allows you to associate a new Class of Service table with the network *netid* for the gateway NCP or PU type 5 identified by *name*.

- F TABLE,OPT=DEL

  Allows you to delete the association between *name*, its subordinate nodes, and *old_table_name*. If applicable, default tables are used with subsequent session initiation requests.

- F TABLE,OPT=DEL,TYPE=COS

  Allows you to terminate the association between a COS table and network *netid* for gateway NCP *name*. A COS table is no longer defined for the specified network.

- F TABLE,OPT=DEL,TYPE=FILTER

  Allows you to delete the current session awareness (SAW) data filter. When you delete the filter, SAW data and trace data for all sessions are sent over the CNM interface.

- F TABLE,OPT=LOAD

  Allows you to replace *old_table_name*, which is in use, with *new_table_name*, which is currently not in use, or to reload a table that is in use. All resources currently associated with the old table are re-associated with the new table.

  Note: If *old_table_name* is the current value of the DYNMODTB start option, the value of the DYNMODTB start option is changed to *new_table_name*.

  If OLDTAB is omitted, it is assumed to be the same as NEWTAB.

- F TABLE,OPT=LOAD,TYPE=FILTER

  Allows you to replace the current session awareness data filter, which is in use, with a new filter, which is currently not in use, or to reload a filter that is in use.

- F TABLE,OPT=LOAD,TYPE=CMIPDDF

  Loads the current version of the CMIP services directory definition file, which lists the systems that are and are not allowed access to CMIP services.

  When CMIP services is started, CMIP services reads in the directory definition file. You can update the directory definition file while VTAM is running, but CMIP services is aware of these changes only when the MODIFY TABLE command is issued.

Note: If you use the MODIFY TABLE command to change or delete a table association, be aware that later use of a VARY ACT,UPDATE=ALL command for dynamic reconfiguration can undo the effects of the MODIFY TABLE command. This is because the table name in the definition file overrides the value that was changed or deleted with the MODIFY TABLE command. Even if no table name is coded in the definition file, VTAM assumes a null value for the table name and the null value overrides the MODIFY TABLE value.

To prevent the new table name specification from being overridden unintentionally, code the definition statement with the desired value.

Operands

procname
The procedure name for the command. If *procname* in the START command was specified as *startname.ident*, where *startname* is the VTAM start procedure and *ident* is the optional identifier, either *startname.ident* or *ident* can be specified for *procname*.

If *procname* in the START command was *startname*, *startname* must be specified for *procname*.

ID=name
Identifies the resource. All resources at or below this resource in the hierarchy are considered eligible resources.

The name can be a network-qualified name. If the name specified on the ID operand is network-qualified, this name is considered to be the real name of the resource. If a cross-network CDRSC is to be specified on the ID operand, it must be specified as a network-qualifed name if the CDRSC is defined using NQNMODE=NQNAME (either by definition or start option). For a message-flooding prevention table (TYPE=FLDTAB), this value must always be specified as ISTNOP.

NETID=netid
Identifies the network attached to a gateway NCP with which the Class of Service table association is to be changed.

Note: If a model network is defined by using COPIES as part of the network definition, then *NETWORK is used to change the Class of Service table for the model network.

NEWTAB=new_table_name
Identifies the table to be used. When the new table is of TYPE=USSTAB, then FORMAT=DYNAMIC must have been coded on the USSTAB macro for the referenced table.

VTAM validates the table type.

OLDTAB
Specifies a specific old table or all old tables.

OLDTAB=old_table_name
For OPTION=ASSOCIATE, changes associations for the resource specified by the ID operand (and its subordinate resources) and currently associated with the named table.

For OPTION=DELETE, terminates associations for the resource specified by the ID operand (and its subordinate resources) and currently associated with the named table.

For OPTION=LOAD, replaces the old table with the table identified by the NEWTAB operand. Resources associated with the old table are re-associated with the new table.

Note: If *old_table_name* is the current value of the DYNMODTB start option, the value of the DYNMODTB start option is changed to *new_table_name*.

OLDTAB=*

For OPTION=ASSOCIATE, indicates that the specified table associations should be changed to *new_table_name*, regardless of the current table associations.

For OPTION=DELETE, changes the associations of all eligible resources specified by the ID operand regardless of any current table associations.

OPTION

Specifies whether a table is to have its resource associations changed or deleted, or whether the table is to be loaded.

OPTION=ASSOCIATE

Specifies the table is to have its resource associations changed. It changes the associations of the specified resources. If the table to be associated is not in use, VTAM loads it. Current table associations for a specific resource can be determined by issuing one of the following commands:

- The DISPLAY COS command for the resource named on the ID operand
- The DISPLAY ID command for the resource named on the ID operand or its subordinate nodes

If the MODETAB, LOGTAB, or USSTAB value is omitted from the original resource definition, the default table can be used. However, the name of the default table is not stored with the resource definition. Therefore, MODIFY TABLE,OLDTAB=*default_name*, NEWTAB=*new_table_name* does not change the table association; however, OLDTAB=*,NEWTAB=*new_table_name* does provide that function.

If COSTAB was not specified on either the BUILD or NETWORK definition statement, OPTION=ASSOCIATE adds the appropriate Class of Service specification.

A non-gateway SSCP (GWSSCP=NO) can associate a Class of Service table only for the native network of a gateway NCP.

Specifying MODIFY TABLE,OPTION=ASSOC,TYPE=COS, ORIGIN= *host_pu_name*, NEWTAB=ISTSDCOS,NETID=*host_netid* requests that VTAM attempt to load ISTSDCOS if it is not currently loaded. This enables the user to create and load a copy of ISTSDCOS, even though one might not have been available during VTAM initialization. *host_pu_name* can be either ISTPUS or the name specified in the HOSTPU start option.

Use MODIFY TABLE,OPTION=LOAD,NEWTAB=ISTSDCOS to request VTAM to reload ISTSDCOS if it is currently loaded.

OPTION=DELETE

Specifies the table is to have its resource associations deleted. It terminates the association between the specific resources and the table.

If USSTAB, MODETAB, LOGTAB, ASLTAB, or MDLTAB is not specified when the resource is defined, there is no association to terminate. Where applicable, the default table is still used.

If *old_table_name* is an IBM-supplied default table (for example OLDTAB=ISTINCDT or OLDTAB=ISTSDCOS), all explicit table associations are terminated, but the table is not deleted from memory. If *old_table_name* is not an IBM-supplied default table, it is deleted from memory as a result of this command.

OPTION=LOAD
Specifies the table is to be loaded.

When OPTION=LOAD,NEWTAB=new_table_name is specified:

The MODIFY TABLE command loads the table named in the NEWTAB operand. All resources associated with the old table are re-associated with the new table. If the OLDTAB and NEWTAB operand values are identical or OLDTAB is omitted, the indicated table is reloaded into memory.

Note: All tables must be associated with resources. OPTION=LOAD replaces a table only if it is already being used by a resource. OPTION=ASSOCIATE can be used to load a new table (which is not in use) and associate it with a resource.

The IBM-supplied tables can be reloaded (*old_table_name* is equal to *new_table_name*), but cannot be deleted (*old_table_name* is not equal to *new_table_name*).

When OPTION=LOAD,TYPE=CMIPDDF is specified:

CMIP services reads in the current version of the directory definition file without disrupting the CMIP application program interface or any topology manager or topology agent application programs. If the MODIFY command fails, the existing directory definition file remains in use.

If CMIP services is not active when the command is issued, a message indicates it is not active. When CMIP services becomes active, it reads in the current version of the directory definition file.

If CMIP services is active when the command is issued, it reads in the current version of the directory definition file from SYS1.SISTCMIP. The directory definition file indicates the instances of CMIP services that can have associations with one another. For a description of associations, refer to the *z/OS Communications Server: SNA Network Implementation Guide*. Existing associations are not affected by this command. For example, if the directory definition file denies access to an application program that already has an association with CMIP services, the association remains established. However, if this association ends, it cannot be reestablished, because the directory definition file denies access to that application program.

ORIGIN=ncp_name
Identifies the NCP major node of a gateway NCP for which the Class of Service table association is to be changed.

TYPE
Specifies the type of table the command will process. This value must be one of the following:

TYPE=ASLTAB
Specifies the associated LU table.

TYPE=CMIPDDF
Specifies the updated CMIP services directory definition file.

TYPE=COSTAB
Specifies the Class of Service table.

TYPE=FILTER
Specifies the session awareness data filter.

TYPE=FLDTAB
Specifies the message-flooding prevention table. For TYPE=FLDTAB, ID must be specified as ISTNOP.

TYPE=LOGTAB
Specifies the interpret table.

TYPE=MDLTAB
Specifies the model name table.

TYPE=MODETAB
Specifies the logon mode table.

Note: The MODIFY TABLE command does not change the value of the DLOGMOD operand. To change the value of the DLOGMOD operand, see the "MODIFY DEFAULTS command" on page 300 or the "MODIFY RESOURCE command" on page 368.

TYPE=USSTAB
Specifies the USS table. If message IST116I is received because the USSTAB start option is incorrect, MODIFY TABLE,OPTION=ASSOCIATE,ID=ISTNOP,OLDTAB=*, NEWTAB=*new_table_name* can be issued to supply a new USS table, represented by ISTNOP, for the network operator.

When OPTION=ASSOCIATE or OPTION=DELETE is specified, VTAM does not change the value of USS LANGTAB tables. When OPTION=LOAD is specified, VTAM changes the USS LANGTAB table if *old_table_name* or *new_table_name* is currently being used as a LANGTAB table. For more information about LANGTAB processing using USS commands, see the *z/OS Communications Server: SNA Resource Definition Reference*.

MODIFY TGP command

```
►►──MODIFY procname,TGP──,TGPNAME=tg_profile_name──────────────────────►
►──┬─,ID=adjacent_link_station_name─┬──────────────────────────────────►◄
   └─,ID=cp_name─,TGN=tg_number──────┘
```

Abbreviations

Operand	Abbreviation
MODIFY	F

Purpose

The MODIFY TGP (transmission group profile) command allows you to change the TG profile associated with a type 2.1 connection. A specific connection is identified by the combination of a control point (CP) name and TG number, or by the adjacent link station (PU) name.

If this command is issued while the connection is active and the new TG profile can be located, the topology database is updated and the new characteristics are used immediately. If the connection is not active, the new TG profile name is saved and is reported the next time the connection is activated.

This command is valid only when it is issued at an APPN node (network node, end node, interchange node, or migration data host).

Operands

procname
The procedure name for the command. If *procname* in the START command was specified as *startname.ident*, where *startname* is the VTAM start procedure and *ident* is the optional identifier, either *startname.ident* or *ident* can be specified for *procname*.

If *procname* in the START command was *startname*, *startname* must be specified for *procname*.

ID=name
Specifies an adjacent control point (CP) name or an adjacent link station (PU) name. If a CP name is specified, then the TGN operand must also be specified.

A CP name can be network-qualified. If the network ID is not specified, VTAM uses the network ID of the host from which the command is issued. You can specify * (or *NETWORK) as the network ID portion of a network-qualified adjacent CP name in order to modify the TG profile for adjacent CPs that do not currently have a network identifier assigned to them. For example, the following command is valid if A01N currently does not have a network ID associated with it:

```
F procname,TGP,TGPNAME=BATCH,ID=*.a01n,TGN=3
```

TGN=tg_number
Specifies the transmission group number associated with the CP. For virtual-route-based TG connections, TGN must be specified as 255.

TGPNAME=tg_profile_name
Specifies the name of a transmission group profile definition.

MODIFY TNSTAT command

```
                                  ┌─,ACTION=ACTIVATE─┐
►►─MODIFY procname,TNSTAT─────────┤                  ├──┬──────────────────────────────►
                                  └─,ACTION=UPDATE───┘  └─,CNSL=──┬─NO──┬─┘
                                                                  └─YES─┘

►──┬──────────────────────────┬──┬──────────────────────────────────────────────┬──►◄
   └─,TIME=number_of_minutes──┘  └─,TRLE=──┬─trle_name──────────────────────────┬─┘
                                           │      ┌──────────────────┐          │
                                           │      ▼                  ,          │
                                           └─(────trle_name──────────────────)──┘
```

Abbreviations

Operand	Abbreviation
MODIFY	F
ACTION=ACTIVATE	ACTIVATE or A
ACTION=UPDATE	UPDATE or U
CNSL=NO	NOCNSL
CNSL=YES	CNSL

When using an abbreviation in place of an operand, code the abbreviation exactly as shown in the table. For example, when coding the abbreviation for CNSL=YES, code only CNSL.

Purpose

VTAM can record tuning statistics about some of its activities. You can use these statistics to adjust VTAM and NCP variables to improve performance. You can use tuning statistics to gather information on communications between VTAM and any of the following channel-attached nodes:

- Communication controller
- Adjacent host processor
- SNA cluster controller

For more information on using tuning statistics, see the *z/OS Communications Server: SNA Network Implementation Guide*.

You can record external trace data using the system management facility (SMF) in the system during system generation.

MODIFY TNSTAT reopens the tuning statistics file if it was closed by a previous MODIFY NOTNSTAT command.

Operands

procname

The procedure name for the command. If *procname* in the START command was specified as *startname.ident*, where *startname* is the VTAM start procedure and *ident* is the optional identifier, either *startname.ident* or *ident* can be specified for *procname*.

If *procname* in the START command was *startname*, *startname* must be specified for *procname*.

ACTION=ACTIVATE
Specifies the TNSTAT recording is to be initiated.

ACTION=UPDATE
Specifies either or both the CNSL and TIME operands are to be processed without initiating recording.

CNSL
Specifies whether tuning statistics are to be sent to the system console.

The CNSL operand is placed in effect for all devices collecting tuning statistics.

CNSL=YES
Specifies that tuning statistics records are to be sent to the system console.

CNSL=NO
Specifies that tuning statistics records are not to be sent to the system console.

TIME=number_of_minutes
Specifies the number of minutes in the tuning statistics reporting interval. At the end of each interval, summary records are sent to SMF (if SMF is active) and to the system console (if CNSL=YES). Specify this number as a decimal integer in the range 1–1440. If the TIME operand is not specified, the following will occur:

- If this is the first activation of tuning statistics a default of 60 minutes is used.
- If tuning statistics was previously activated then inactivated, the value that was in effect when tuning statistics was inactivated is reinstated.

TRLE=*trle_name*
Specifies the Transport Resource List Entry name or names for which statistical recording is to be initiated.

Note: Recording is initiated only for those devices within the specified TRLE or TRLEs. If the TRLE operand is not specified, recording is initiated for all devices that collect tuning statistics.

The TRLE operand is mutually exclusive with the ACTION=UPDATE operand.

MODIFY TOPO command

Delete a node:

```
►►──MODIFY procname,TOPO──,ID=cp_name──┬─────────────────────┬──────────────────────────►
                                       └─,FUNCTION=DELETE────┘

►─┬─────────────────────┬──┬──────────────────┬──────────────────────────────────────────►◄
  ├─,SCOPE=LOCAL────────┤  └─,TYPE=FORCE──────┘
  └─,SCOPE=──┬─LOCAL───┬┘
             └─NETWORK─┘
```

Delete a transmission group:

```
►►──MODIFY procname,TOPO──┬─────────────────────┬──,ORIG=cp_name──,DEST=cp_name──────────►
                          └─,FUNCTION=DELETE────┘

►─,TGN=tg_number──┬─────────────────────┬──┬──────────────────┬──────────────────────────►◄
                  ├─,SCOPE=LOCAL────────┤  └─,TYPE=FORCE──────┘
                  └─,SCOPE=──┬─LOCAL───┬┘
                             └─NETWORK─┘
```

Modify the status of a node for route calculation:

```
►►──MODIFY procname,TOPO──,ID=cp_name──,FUNCTION=──┬─NORMAL──┬──────────────────────────►
                                                   └─QUIESCE─┘

►─┬─────────────────────┬──────────────────────────────────────────────────────────────►◄
  ├─,SCOPE=LOCAL────────┤
  └─,SCOPE=──┬─LOCAL───┬┘
             └─NETWORK─┘
```

Modify the status a transmission group for route calculation:

```
►►──MODIFY procname,TOPO──,FUNCTION=──┬─NORMAL──┬──,ORIG=cp_name──,DEST=cp_name──────────►
                                      └─QUIESCE─┘

►─,TGN=tg_number──┬─────────────────────┬──────────────────────────────────────────────►◄
                  ├─,SCOPE=LOCAL────────┤
                  └─,SCOPE=──┬─LOCAL───┬┘
                             └─NETWORK─┘
```

Abbreviations

Operand	Abbreviation
FUNCTION=DELETE	DELETE
MODIFY	F
TYPE=FORCE	FORCE or F

When using an abbreviation in place of an operand, code the abbreviation exactly as shown in the table. For example, when coding the abbreviation for TYPE=FORCE, code only F or FORCE. Do not code TYPE=F.

Purpose

The MODIFY TOPO (topology) command deletes entries from the topology database or changes the status of an entry in the topology database. The entries can be for either nodes or transmission groups (TGs).

Normally you should not need to delete entries from the database; however, if for some reason you need to do so, you can use this command. For example, if another node (over which you have no control) has broadcast erroneous or unnecessary topology data into the network, the topology database at this node could choose incorrect or inefficient routes.

Existing sessions are not affected when you delete an entry from the topology database or change the status of an entry in the topology database for a node or TG that is currently in use. However, new session requests might fail if no other route is available.

This command is valid only when it is issued at a network node or an interchange node.

Notes:

1. You cannot delete the entry for your own host node.
2. You cannot delete an active local transmission group.
3. You cannot delete an adjacent node unless the link to the adjacent node is inactive.

Operands

procname
The procedure name for the command. If *procname* in the START command was specified as *startname.ident*, where *startname* is the VTAM start procedure and *ident* is the optional identifier, either *startname.ident* or *ident* can be specified for *procname*.

If *procname* in the START command was *startname*, *startname* must be specified for *procname*.

DEST=cp_name
Specifies the destination node (a control point) for a transmission group. The name can be network-qualified.

FUNCTION
Specifies the function to be performed on the entry in the topology database.

FUNCTION=DELETE
Specifies that an entry is to be deleted from the topology database.

FUNCTION=NORMAL
Specifies that an entry for a resource is to be returned to a normal state (after being quiesced) in the topology database and available for route calculation.

FUNCTION=QUIESCE
Specifies that an entry for a resource is to be marked as quiesced in the topology database and not used for route calculation.

ID=cp_name
Specifies the name of a node (control point). The name can be network-qualified.

Note: You cannot delete the entry for your own host node.

ORIG=cp_name
Specifies the origin node (a control point) for a transmission group. The name can be network-qualified.

TGN=tg_number
Specifies the transmission group number. The valid range for TG numbers is 1–255.

For FUNCTION=DELETE, the transmission group is deleted in both directions between the origin and destination nodes.

SCOPE
Specifies whether the request affects the local topology database only or is propagated to all topology databases in the network.

SCOPE=LOCAL
Specifies that the request affects the local topology database only.

For FUNCTION=DELETE, the resource is deleted immediately from the local topology database.

SCOPE=NETWORK
Specifies that the request is propagated to all topology databases in the network.

For FUNCTION=DELETE, the resource is marked as unusable for route calculation in all topology databases in the network. Each network node supporting enhanced topology database garbage collection deletes the resource during its next garbage collection cycle. Garbage collection occurs once every 24 hours. Network nodes that do not support enhanced topology database garbage collection reset the time left value to 15 days.

Notes:

1. If SCOPE=NETWORK is specified for an end node resource, the request is not propagated to other network nodes. Topology information for end node resources is only kept in the topology database of the owning network node.
2. If SCOPE=NETWORK is specified with FUNCTION=QUIESCE for another node or for a TG owned by another node, a correction to the status of the resource might be broadcast by the owning node.

TYPE=FORCE
Required to delete an adjacent node. The link to the adjacent node must be inactive. If you are deleting a node that is not adjacent, this operand is not required.

TYPE=FORCE is also required to delete a local transmission group. A TG is considered to be local if the origin or destination is the host from which you are entering this command. The TG must be inactive. If the TG is not local, this operand is not required.

MODIFY TRACE command

Start or modify a buffer contents trace:

```
►►──MODIFY procname,TRACE──,TYPE=BUF──,ID=node_name──┬─,AMOUNT=PARTIAL──────────┬──►
                                                     └─,AMOUNT=──┬─FULL────────┬─┘
                                                                 └─PARTIAL─────┘

►──┬─,IDTYPE=RESOURCE──────────┬──┬─,SAVE=NO──────────┬──┬─,SCOPE=ONLY──────────┬──►◄
   └─,IDTYPE=──┬─CP──────────┬─┘  └─,SAVE=──┬─NO────┬─┘  └─,SCOPE=──┬─ONLY────┬─┘
               ├─SSCP────────┤              └─YES─────┘               └─ALL─────┘
               └─RESOURCE────┘
```

Start or modify a communication network management trace:

```
►►──MODIFY procname,TRACE──,TYPE=CNM──,ID=──┬─PDPIUBUF──┬──►◄
                                            └─SAWBUF────┘
```

Start or modify a user Exit buffer trace:

```
►►──MODIFY procname,TRACE──,TYPE=EXIT──,ID=ISTEXCAA──►

►─,OPTION=──┬─ALL──────────────────┬──►◄
            ├─option───────────────┤
            ├─(option)─────────────┤
            │   ┌──────────────┐   │
            │   ▼              │   │
            └─(──┬─ACCTING─────┬─)─┘
                 ├─ADJSSCP─────┤
                 ├─ALIAS───────┤
                 ├─ALS─────────┤
                 ├─BEGIN───────┤
                 ├─END─────────┤
                 ├─GWPATH──────┤
                 ├─INITAUTH────┤
                 ├─REPL────────┤
                 ├─SECAUTH─────┤
                 ├─VRSEL───────┤
                 └─XRF─────────┘

►►──MODIFY procname,TRACE──,TYPE=EXIT──,ID=ISTEXCCS──►

►─,OPTION=──┬─ALL──────────────────┬──►◄
            ├─option───────────────┤
            ├─(option)─────────────┤
            │   ┌──────────────┐   │
            │   ▼              │   │
            └─(──┬─BEGIN───────┬─)─┘
                 ├─CONNSTAT────┤
                 ├─DYNA_XID────┤
                 ├─PRED_XID────┤
                 └─END─────────┘
```

```
►►──MODIFY procname,TRACE──,TYPE=EXIT──,ID=ISTEXCDM──────────────────────────►

►─,OPTION=──┬─ALL──────────────────┬──────────────────────────────────────────►◄
            ├─option───────────────┤
            ├─(option)─────────────┤
            │      ┌─,──────────┐  │
            └─(────┴─┬─BEGIN────┬─┴─)┘
                     ├─INITAUTH─┤
                     ├─ADS_SEL──┤
                     ├─BN_SEL───┤
                     ├─CDS_SEL──┤
                     ├─CRR_SEL──┤
                     ├─REPL─────┤
                     └─END──────┘
```

Start or modify a generalized PIU trace:

```
►►──MODIFY procname,TRACE──,TYPE=GPT──,ID=node_name──────────────────────────►

►──┬──────────────────────────────────────┬──┬─────────────────────┬──────────►
   └─,ALSNAME=adjacent_link_station_name──┘  └─,IDTYPE=RESOURCE────┘
                                             ┌─,IDTYPE=──┬─CP────────┬─┐
                                             │           ├─SSCP──────┤ │
                                             │           └─RESOURCE──┘ │

   ┌─,SCOPE=ONLY──────┐
►──┤                  ├──────────────────────────────────────────────────────►◄
   └─,SCOPE=──┬─ONLY─┬─┘
              └─ALL──┘
```

Start or modify an input/output trace:

```
                                                   ┌─,IDTYPE=RESOURCE────┐
►►──MODIFY procname,TRACE──,TYPE=IO──,ID=node_name─┤                     ├──────►
                                                   └─,IDTYPE=──┬─CP────────┬─┘
                                                               ├─SSCP──────┤
                                                               └─RESOURCE──┘

   ┌─,SAVE=NO──────┐  ┌─,SCOPE=ONLY──────┐
►──┤               ├──┤                  ├──────────────────────────────────►◄
   └─,SAVE=──┬─NO─┬─┘  └─,SCOPE=──┬─ONLY─┬─┘
             └─YES─┘               └─ALL──┘
```

Start or modify an input/output trace for a TRLE with the DATAPATH operand coded:

```
                                                   ┌─,IDTYPE=RESOURCE──┐
►►──MODIFY procname,TRACE──,TYPE=IO──,ID=trle_name─┤                   ├──────►
                                                   └─,IDTYPE=RESOURCE──┘
```

MODIFY TRACE

```
►──┬──────────────────────────────────────────┬──┬──────────────────┬──►
   └─,DEVICE──=──┬─ALL──────────────────┬─┘  └─,LENGTH=272──────┘
                 └─hex_device_address─┘     └─,LENGTH=number_of_bytes─┘

►──┬─,SAVE=NO──────┬──┬─,SCOPE=ONLY──────┬──────────────────────────►◄
   └─,SAVE=──┬─NO──┬─┘  └─,SCOPE=──┬─ONLY─┬─┘
             └─YES─┘               └─ALL──┘
```

Start or modify a module trace:

```
►►──MODIFY procname,TRACE──,TYPE=MODULE──,OPTION=──┬─ALL──────────────────────┬──►◄
                                                   ├─option─────────────────┤
                                                   ├─(option)───────────────┤
                                                   │   ┌──────────────┐     │
                                                   └─(─▼─┬─COMMAND────┬─)─┘
                                                         ├─CONNECTION─┤
                                                         ├─DEFINITION─┤
                                                         ├─INTERFACES─┤
                                                         ├─MANAGEMENT─┤
                                                         ├─NOEXIT─────┤
                                                         ├─PURGE──────┤
                                                         └─SESSION────┘
```

Start or modify an NCP line trace:

```
►►──MODIFY procname,TRACE──,TYPE=LINE──,ID=line_name──────────────────────►

►──┬─,COUNT=ALL──────────────────┬──────────────────────────────────────►◄
   └─,COUNT=──┬─ALL──────────────┬─┘
              └─number_of_bytes─┘
```

Start or modify a 3710 Network Controller line trace:

```
►►──MODIFY procname,TRACE──,TYPE=NETCTLR──,ID=pu_name──,LINE=line_name──────►

►─,PU=3710_pu_name──┬──────────────────────────────────────────────────►◄
                    └─,FRAMES=──┬─ALL──┬─┘
                                └─DATA─┘
```

Start or modify a scanner interface trace:

```
►►──MODIFY procname,TRACE──,TYPE=SIT──,ID=line_name──────────────────────►
```

```
►┬─,COUNT=ALL──────────────────┬──┬──────────────────────────────┬──►◄
 │                             │  │                              │
 └─,COUNT=──┬─ALL──────────────┬┘  └─,TRACEPT=trace_point_id──────┘
            └─number_of_bytes──┘
```

Start or modify an SMS (buffer use) trace:

```
►►─MODIFY procname,TRACE──,TYPE=SMS──┬─,ID=VTAMBUF─┬──────────────────►◄
                                     └─────────────┘
```

Start or modify a resource state trace:

```
►►─MODIFY procname,TRACE──,TYPE=STATE──────────────────────────────────►

►──┬─,ID=node_name──┤ Operands used with ID ├──┬──────────────────────►◄
   └─,OPTION=──┬─ALL──────────────────────────┬┘
               ├─option──────────────────────┤
               ├─(option)────────────────────┤
               │      ┌──,──────────┐        │
               └─(────▼──┬─ADJCP────┬──)─────┘
                         ├─APPL──────┤
                         ├─CDRM──────┤
                         ├─CDRSC─────┤
                         ├─GROUP─────┤
                         ├─LINE──────┤
                         ├─LNKST─────┤
                         ├─LU────────┤
                         ├─NCP───────┤
                         └─PU────────┘
```

Operands used with ID:

```
├─┬─,IDTYPE=RESOURCE──────────┬──┬─,SAVE=NO──────────┬──────────────────►
  │                           │  │                   │
  └─,IDTYPE=──┬─CP──────────┬───┘  └─,SAVE=──┬─NO──┬──┘
              ├─SSCP────────┤                └─YES─┘
              └─RESOURCE────┘
```

MODIFY TRACE

```
►──┬──────────────────────────────────────────────────────────────────────┬──┤
   └─,OPTION=──┬─ALL──────────────────┬─┘
               ├─option───────────────┤
               ├─(option)─────────────┤
               │      ┌──,──────────┐│
               │      ▼             │
               └─(────┬─ADJCP─────┬──┴─)─┘
                      ├─APPL──────┤
                      ├─CDRM──────┤
                      ├─CDRSC─────┤
                      ├─GROUP─────┤
                      ├─LINE──────┤
                      ├─LNKST─────┤
                      ├─LU────────┤
                      ├─NCP───────┤
                      └─PU────────┘
```

Start or modify a transmission group trace:

```
►►──MODIFY procname,TRACE──,TYPE=TG──,ID=line_name──────────────────────►◄
```

Start or modify a TSO user ID trace:

```
►►──MODIFY procname,TRACE──,TYPE=TSO──,ID=tso_user_id───────────────────►◄
```

Start or modify the VTAM internal trace:

```
►►──MODIFY procname,TRACE──,TYPE=VTAM───────────────────────────────────►

►──┬──────────────────────────────────────────────────────────────────────┬►
   │                   ┌──,BFRNUM=2──────┐                                │
   └─,MODE=──┬─EXT─────┤                 ├──────────────────────────────┘
             │         └──,BFRNUM=number─┘                                │
             └─INT─────┬──────────────────────────────────────────────────┬
                       └──,SIZE=size──┘  └──,DSPSIZE=dspsize──┘
```

```
►──┬──────────────
```

Operand	Abbreviation
OPTION=MANAGEMENT	OPT=MGMT
OPTION=SESSION	OPT=SES
SAVE=YES	SAVE
SCOPE=ALL	EVERY or E
SCOPE=ONLY	NONE
TRACES	TRACE

When using an abbreviation in place of an operand, code the abbreviation exactly as shown in the table. For example, when coding the abbreviation for SCOPE=ALL, code only EVERY or E. Do not code SCOPE=E.

Purpose

The MODIFY TRACE command starts traces or modifies the parameters for currently running traces. VTAM traces are also started with the TRACE start option, as described in the *z/OS Communications Server: SNA Resource Definition Reference*.

Activation and use of VTAM traces have dependencies on the options used to start the system trace facility in each operating system environment. See the *z/OS Communications Server: SNA Diagnosis Vol 1, Techniques and Procedures* for a complete description of the system trace facility requirements, when to use these traces, and how to interpret the results.

General PIU trace (GPT) records are printed by the trace analysis program (TAP) utility of SSP. For more information about TAP, see the *NCP, SSP, and EP Diagnosis Guide* .

Operands

procname

The procedure name for the command. If *procname* in the START command was specified as *startname.ident*, where *startname* is the VTAM start procedure and *ident* is the optional identifier, either *startname.ident* or *ident* can be specified for *procname*.

If *procname* in the START command was *startname*, *startname* must be specified for *procname*.

ALSNAME=adjacent_link_station_name

Applies only when TYPE=GPT and specifies the name of the adjacent link station through which you want tracing to occur. The adjacent link station name must be a PU in an NCP major node or a switched PU connected by an NCP link.

The LU can be traced over multiple connections; however, to do so, you must enter a separate command for each connection.

You do not need to specify the ALSNAME operand if either of the following is true:

- The ALS list has only one entry (and it is not ISTAPNPU). That entry is selected.
- The ALS list has two entries, one of which is ISTAPNPU. The entry other than ISTAPNPU is selected.

The command fails if ISTAPNPU is specified, or if ISTAPNPU is used by default because it is the only entry in the ALS list.

If no ALS list exists for the resource, specify the adjacent link station on the ALSNAME operand.

Use the DISPLAY ID=*lu_name*,SCOPE=ALL command to display all sessions for an independent LU and which adjacent link station list is used for each session.

AMOUNT

Applies only when TYPE=BUF. It determines whether VTAM starts a partial buffer contents trace or a full buffer contents trace for the specified node name.

You can run a partial buffer contents trace and a full buffer contents trace at the same time for different resources. (Issue a separate MODIFY TRACE command for each resource.) For example, you can start a partial buffer contents trace for an application program, with partial buffer contents tracing for some resources in session with the application program and full buffer contents tracing for other resources in session with the application program. When the level of tracing differs between two resources on opposite ends of a session (one is partial and the other is full), full buffer tracing is used.

You can switch between partial and full buffer tracing for the same resource by issuing additional MODIFY TRACE commands, without having to deactivate the trace.

AMOUNT=PARTIAL

Tells VTAM to record the data in trace records with a maximum size of 256 bytes. Each trace record contains a trace record header and data. Data that does not fit in a 256-byte trace record is lost.

AMOUNT=FULL

Tells VTAM to record all of the data transmitted in message buffers. Multiple trace records might be needed to record all of the data.

BFRNUM=number

Applies only to TYPE=VTAM,MODE=EXT. It specifies the number of 8K external trace buffers the VTAM internal trace is to allocate and use for generalized trace facility (GTF) processing. Integers 0 or 2–50 can be specified. If you omit this option, the default is 2. Two times the number of processors in the central processing unit (CPU) should ensure that enough buffers are available.

When an integer in the range of 2–50 is specified, VTAM accumulates approximately 8K of external trace data prior to sending the data to GTF.

If zero is specified or there is no buffer available for the trace record, VTAM sends each trace record to GTF as it is recorded. This can incur a significant system overhead, but may be necessary if individually timestamped records are needed.

If external trace recording is already active, and the new value specified for BFRNUM:

- Is less than the existing value, the number of buffers is not changed
- Is greater than the existing value, the number of the buffers is increased

COUNT

Applies only when TYPE=LINE or TYPE=SIT. It specifies the number of bytes that are traced by either the NCP for a line trace (without the TG operand), or the communication scanner processor for the scanner interface trace. The

COUNT operand has no effect on NTRI lines prior to NCP V5R2.1. NTRI always traces the same amount of data.

COUNT=number_of_bytes
Specifies the number of bytes of data to be traced. The value must be a decimal integer 0–254. COUNT=0 specifies that only the NCP control characters and none of the data is to be traced.

COUNT=ALL
Specifies that all of the data is to be traced.

DEVICE
Applies only when the ID operand is a TRLE that has the DATAPATH operand coded. Use DEVICE to start input/output trace on OSA-Express devices specified on the DATAPATH operand.

DEVICE=ALL
Specifies to turn on input/output trace on all devices in the DATAPATH list.

DEVICE=*hex_device_address*
Specifies to turn on input/output trace for a specific DATAPATH device.

DSPSIZE
Controls the use of the VIT data space. The VIT data space can store much more of the internal VIT than is possible using only the fixed CSA internal VIT. The default DSPSIZE is 0, meaning the data space will not be used. Valid values are 0 through 5, where a value of 1 is equal to 10 megabytes, a value of 2 is equal to 20 megabytes, and so on.

FRAMES
Applies only when TYPE=NETCTLR. For a start/stop line, ALL is the only option. If DATA is specified on a start/stop line, it is ignored and the command proceeds as if ALL were specified. For SDLC and BSC lines, either DATA or ALL can be specified, with DATA being the default.

FRAMES=ALL
Specifies that all frames (meaning control and data frames) are to be traced by the cluster control unit.

FRAMES=DATA
Specifies that only data frames are to be traced by the cluster control unit.

ID=name
Specifies the name of the resource for which tracing is to be done. Only active resources can be traced. This operand does not apply when TYPE=MODULE or TYPE=VTAM.

Names of various types of resources can be specified, depending on the value of the TYPE operand. The different resources and the traces that can be specified for them (with the TYPE operand) are shown in Figure 5 on page 405 and are described in the following section.

For TYPE=BUF, TYPE=IO, TYPE=GPT, or TYPE=STATE, the name can be a network-qualified name. If *name* is an ACB name, and the ACB name matches the name on the APPL definition statement, then you can use a network-qualified ACB name.

For TYPE=BUF, TYPE=IO, or TYPE=STATE for a CDRM, you can specify a network-qualified name, but this does not remove the restriction that the non-network-qualified CDRM name must be unique across networks.

MODIFY TRACE

BUF, SCOPE = ALL	BUF	CNM	EXIT	GPT, SCOPE = ALL	GPT	IO, SCOPE = ALL	IO	LINE	MODULE	NETCTLR	SIT	SMS	STATE	TG	TSO	VTAM	ID=
●							●						●				Adjacent CP major node
													●				Application program major node
●	●						●						●		●		Application program minor node
						●							●				Channel-attachment major node
							●						●				Channel link
													●				Channel link station
					●								●				CDRSC major node
●	●				●		●						●				CRDSC minor node
													●				Dynamic CDRSC major node
●	●						●						●				Dynamic CDRSC minor node
													●				CDRM major node
●	●					●	●						●				CDRM minor node
						●							●				XCA major node
							●						●				Nonswitched line
													●				Link station
							●						●				Switched line
●													●				Local non-SNA major node
●	●						●						●				Local non-SNA logical unit
													●				Local SNA major node
●	●					●	●						●				Local SNA physical unit
	●						●						●				Local SNA logical unit
●	●			●	●	●	●						●				NCP major node
●					●	●		●			●		●	●			Nonswitched line
●					●	●		●			●		●				Switched line
													●				Link station
●	●				●	●	●						●				Physical unit
●	●				●		●						●				Logical unit
													●				Switched major node
●	●				●	●	●						●				Switched physical unit
													●				Switched link station
●	●				●		●						●				Switched logical unit
													●				Dynamic switched major node
●	●				●	●	●						●				Dynamic switched physical unit
●	●				●		●						●				Dynamic switched logical unit
●						●							●				TCP/IP major node
●	●					●	●						●				Nonswitched line
●	●					●	●						●				Physical unit
										●							IBM 3710-attached resource
	●						●										Host physical unit
			●														ISTEXCAA
							●										ISTIRN
	●																ISTNOTIF
	●																ISTTOPAG
		●															PDPIUBUF
		●															SAWBUF
●	●					●	●										VTAM
												●					VTAMBUF
		●	●	●	●			●	●	●	●	●	●	●	●	●	RTP major node
							●										TRL major node

Figure 5. Resource and trace reference

- For **TYPE=BUF or TYPE=IO**, any of the following names can be specified along with the SCOPE=ALL operand to trace message activity with the named resource and, if applicable, all of the resource's subordinate nodes:

- The name of an NCP major node
- The name of the following major nodes (only TYPE=IO,SCOPE=ALL can be specified):
  - Channel-attachment major node
  - TCP/IP major node
  - XCA major node
- The name of a line attached to a communication adapter (only TYPE=IO,SCOPE=ONLY can be specified)
- The name of a line attached to a TCP/IP major node
- The name of a switched line that has a physical unit attached to it
- The name of one of following types of physical units:
  - Channel-attached SNA physical unit
  - An active physical unit defined in a TCP/IP major node
  - Switched physical unit
- The name of a logical unit
- The name of the host CDRM

  Note: If you do a trace for a host CDRM, any subordinate minor nodes also have trace turned on.

Any of the following names can be specified to trace message activity with the named resource:

- Host physical unit (for a trace of all PIUs between this host and another PU type 4 or PU type 5)
- ISTIRN (with TYPE=IO only, for an IO trace of all PIUs passing through this host that are received from a channel-attached PU type 4 or type 5 and are being sent to another channel-attached PU type 4 or type 5)
- VTAM (for a trace of all SSCP sessions)
- The name of an NCP
- The name of a logical unit (including application programs)
- The name of a local non-SNA minor node
- The name of a CDRM (only in a multiple-domain or multiple-network environment)
- The name of a CDRSC
- The name of the internal or external CMIP application program (for TYPE=BUF only). For the VTAM topology agent, *node_name* is ISTTOPAG. For notification services, *node_name* is ISTNOTIF. For external CMIP application programs, *node_name* is the application name defined as the ACB name of the application program major node. In the following example, APPL1 is the name of the CMIP application program, as defined in the name field of the APPL definition statement.

  ```
  APPL1     APPL   PRTCT=ADRAPL01
  ```

The host CP can be traced as an application program minor node, and adjacent CPs can be traced as CDRSC minor nodes.

- For **TYPE=CNM**, the ID operand specifies one of the following:
  - PDPIUBUF, to start the problem determination PIU buffer trace
  - SAWBUF, to start the session awareness buffer trace
- For **TYPE=EXIT**, the ID operand is required and must be specified as ISTEXCAA, ISTEXCCS or ISTEXCDM.

- For **TYPE=GPT**, the ID operand specifies the name of the NCP resource for which tracing is to be done:
  - An NCP major node (and all of its resources) that is active or pending active
  - An NCP switched or nonswitched line

    Note: The ID operand of MODIFY TRACE cannot specify an NCP switched line that is a switched subarea connection.
  - An active LU that has been dynamically reconfigured within the NCP
  - An active PU on an NCP switched line
  - An active or inactive PU on an NCP nonswitched line
  - An active PU that is dynamically reconfigured within the NCP
  - An active or inactive LU associated with an active PU on a switched line
  - An active or inactive LU associated with a PU (active or inactive) on a nonswitched line
  - An active or inactive independent LU associated with a PU (ALS) in an NCP major node or a switched PU connected by an NCP link. The state (active or inactive) of the PU with which the independent LU is associated must be as follows:
    - If it has been dynamically reconfigured within the NCP, the PU must be active
    - If it is on an NCP switched line, the PU must be active.
    - If it is on an NCP nonswitched line, the PU can be either active or inactive.

  The SSCP and host CP are not valid resources for a GPT trace, but the adjacent CP can be traced as a CDRSC minor node.
- For **TYPE=NETCTLR**, the ID operand specifies the name of the physical unit representing the device for which the trace is to be started. (VTAM is not required to own or have knowledge of the 3710.) VTAM sends the name of the PU specified on the ID operand to the 3710 specified on the PU operand.

  If a 3710 is to be simultaneously traced over more than one line, use a separate MODIFY TRACE command to start each trace.

  Note: It is not necessary that the resource specified by the ID operand be another 3710.
- For **TYPE=LINE or TYPE=SIT**, the ID operand specifies the name of the line for which tracing is to be done.

  ID cannot specify a line attached to a communication adapter or the name of a transmission group through a communication adapter.
- For **TYPE=SMS** the ID operand is optional. If it is omitted, ID=VTAMBUF will be used for an SMS trace.
- For **TYPE=STATE**, the ID operand specifies the name of the resource for which state tracing is to be done.
- For **TYPE=TG**, the ID operand specifies the name of a nonswitched line currently within the transmission group to be traced. All the lines in the transmission group are traced as if they were a single logical line.
- For **TYPE=TSO**, the ID operand specifies the TSO user ID for which tracing is to be done.

IDTYPE

Specifies the type of resource that the ID operand names. If several types of resources share the same name, IDTYPE identifies which resources the command should act on. IDTYPE applies to TYPE=BUF, TYPE=IO, TYPE=GPT, and TYPE=STATE.

IDTYPE=CP

Starts tracing for the control point (CP) with the name specified on the ID operand. The CP that is traced can be the host CP or a CDRSC representing an adjacent CP.

IDTYPE=SSCP

Starts tracing for the system services control point (SSCP) with the name specified on the ID operand.

IDTYPE=RESOURCE

Starts tracing for a CP, an SSCP, or another resource with the name specified on the ID operand. If both an SSCP and a CP are found, VTAM starts tracing for both of them.

LENGTH

Applies only when the DEVICE operand is specified and the ID operand is a TRLE that has the DATAPATH operand coded. Use LENGTH to specify the number of bytes from each packet to trace. Valid values are 56 to 9016. Values are rounded up to 56 and values above 9016 are rounded down to 9016. All values are rounded up, if necessary, to an even multiple of 28.

Note: The default value is 272 for a TRLE that has the DATAPATH operand coded.

LINE=line_name

Applies only to TYPE=NETCTLR. It specifies the name of a link that is attached to the 3710 that is to be traced. The 3710 performing the trace (named on the PU operand) copies the SDLC, BSC, and S/S data link control frames that are transmitted or received on that link for the physical unit named by the ID operand. VTAM has no knowledge of this link. VTAM sends the name of the link specified on the LINE operand to the 3710 specified on the PU operand.

MODE

Applies only to TYPE=VTAM. It specifies that the VTAM internal trace is to record its data on an internal, wraparound table (MODE=INT) or an external trace file (MODE=EXT).

You can record trace data internally and externally at the same time. If desired, you can have different sets of trace options active for internal and external recording. VTAM always runs with MODE=INT and the default trace options, regardless of whether you request tracing.

You must run specific operating system utilities to trap, format, and view external trace output. See *z/OS Communications Server: SNA Diagnosis Vol 1, Techniques and Procedures* for more information about use of these operating system utilities.

Do not specify MODE=EXT and SIZE on the same command.

MODE=INT

Specifies that the VTAM internal trace is to record its data on an internal, wraparound table.

MODE=EXT
Specifies that the VTAM internal trace is to record its data on an external trace file as well as on an internal, wraparound table.

OPTION
Spplies to TYPE=EXIT, TYPE=MODULE, TYPE=STATE and TYPE=VTAM.

For **TYPE=EXIT**, OPTION specifies the functions of the session management exit (SME) for which tracing is to be started.

If more than one option is selected, separate them with commas and enclose the list in parentheses; for example OPTION=(BEGIN,INITAUTH,ACCTING).

For **TYPE=MODULE**, OPTION specifies the types of processing modules for which tracing is to be started.

If more than one option is selected, separate them with commas and enclose the list in parentheses; for example OPTION=(COMMAND,SESSION).

For **TYPE=STATE**, OPTION specifies the types of resources for which resource states are to be recorded. The data is recorded using the mode (internal or external) specified for the SSCP VIT option.

If more than one option is selected, separate them with commas and enclose the list in parentheses; for example OPTION=(APPL,GROUP,NCP).

For **TYPE=VTAM**, OPTION specifies the VTAM internal functions for which trace data is to be recorded.

The API, CIO, MSG, NRM, PIU, and SSCP VIT options are kept active by VTAM for internal recording (MODE=INT). If you stop them, VTAM immediately restarts them. For external recording (MODE=EXT), there are no default options. You can start or stop any options.

Note: Although the default options are always active, these options do not appear in DISPLAY TRACES output unless you have specified them on the MODIFY TRACE command or the TRACE,TYPE=VTAM start option.

If more than one option is selected, separate them with commas and enclose the list in parentheses; for example OPTION=(API,NRM,SSCP). For information on what is traced for each internal function, see the *z/OS Communications Server: SNA Diagnosis Vol 2, FFST Dumps and the VIT*.

OPTION=ALL
Applies to TYPE=MODULE, TYPE=STATE, and TYPE=VTAM.

Note: Turning on all traces slows performance.

For TYPE=EXIT, it starts the tracing of all functions.

For TYPE=MODULE, it starts the tracing of all the modules shown on the OPTION operand for which TYPE=MODULE apply.

For TYPE=STATE, it starts the tracing of resource states for all of the resource types shown on the OPTION operand for which TYPE=STATE apply.

For TYPE=VTAM, it starts the VTAM internal trace for all of the VTAM internal functions for which the VTAM internal trace is available. Exception trace entries continue to be recorded.

For **TYPE=EXIT** where ID=ISTEXCAA, you can also specify the following options:

OPTION=ALL
Starts the tracing of all functions.

OPTION=ACCTING
Starts tracing the initial and final accounting function of the session management exit (SME).

OPTION=ADJSSCP
Starts tracing the adjacent SSCP selection function of the session management exit (SME).

OPTION=ALIAS
Starts tracing the alias translation function of the session management exit (SME).

OPTION=ALS
Starts tracing the adjacent link station function of the session management exit (SME).

OPTION=BEGIN
Starts tracing the begin function of the session management exit (SME).

OPTION=END
Starts tracing the end function of the session management exit (SME).

OPTION=GWPATH
Starts tracing the gateway path list function of the session management exit (SME).

OPTION=INITAUTH
Starts tracing the initial authorization function of the session management exit (SME).

OPTION=REPL
Starts tracing the exit replacement function of the session management exit (SME).

OPTION=SECAUTH
Starts tracing the secondary authorization function of the session management exit (SME).

OPTION=VRSEL
Starts tracing the virtual route selection function of the session management exit (SME).

OPTION=XRF
Starts tracing the XRF session switch function of the session management exit (SME).

For **TYPE=EXIT** where ID=ISTEXCCS, you can also specify the following options:

OPTION=ALL
Starts the tracing of all functions.

OPTION=BEGIN
Starts tracing the begin function.

OPTION=CONNSTAT
Starts tracing the connection status.

OPTION=DYNA_XID
Starts tracing the XIDs for dynamic PUs function.

OPTION=END
Starts tracing the end function.

OPTION=PRED_XID
Starts tracing the XIDs for predefined PUs function.

For **TYPE=EXIT** where ID=ISTEXCDM, you can also specify the following options:

OPTION=ALL
Starts the tracing of all the functions.

OPTION=ADS_SEL
Starts tracing the alternate central directory server selection function.

OPTION=BEGIN
Starts tracing the begin function.

OPTION=BN_SEL
Starts tracing the border node selection function.

OPTION=CDS_SEL
Starts tracing the central directory server selection function.

OPTION=CRR_SEL
Starts tracing the central resource registration selection function.

OPTION=END
Starts tracing the end function.

OPTION=INITAUTH
Starts tracing the initial authorization function.

OPTION=REPL
Starts tracing the exit replacement function

For **TYPE=MODULE**, you can also specify the following options:

OPTION=COMMAND
Starts tracing modules involved in command processing.

OPTION=CONNECTION
Starts tracing modules involved in setting up connections between nodes.

OPTION=DEFINITION
Starts tracing modules involved in resource definition processing.

OPTION=INTERFACES
Starts tracing modules involved in the interface with the host SSCP or the host CP.

OPTION=MANAGEMENT
Starts tracing modules involved in network management.

OPTION=NOEXIT
Specifies that module exits are not traced for modules associated with other OPTION values for TYPE=MODULE. Module exits are not traced for any modules until a subsequent MODIFY NOTRACE,TYPE=MODULE,OPTION=NOEXIT command is issued.

Starting a module trace for any OPTION with TYPE=MODULE starts the tracing of the module exits also, unless you specify OPTION=NOEXIT.

OPTION=PURGE
Causes all information currently held in module tracing buffers to be written to VTAM internal trace (VIT) entries. Upon completion of the command, new information is written to the module tracing buffers.

OPTION=SESSION
Starts tracing modules involved in session establishment.

For **TYPE=STATE**, you can also specify the following options:

OPTION=ADJCP
Starts tracing the states of all adjacent control points.

OPTION=APPL
Starts tracing the states of all application programs.

OPTION=CDRM
Starts tracing the states of all CDRMs.

OPTION=CDRSC
Starts tracing the states of all CDRSCs.

OPTION=GROUP
Starts tracing the states of all line groups.

OPTION=LINE
Starts tracing the states of all lines.

OPTION=LNKST
Starts tracing of link stations.

OPTION=LU
Starts tracing the states of all logical units.

OPTION=NCP
Starts tracing the states of all NCPs.

OPTION=PU
Starts tracing the states of all physical units.

For **TYPE=VTAM**, you can also specify the following options:

OPTION=API
Starts tracing the application program interface.

OPTION=APPC
Starts tracing LU 6.2 communication.

OPTION=CFS
Starts tracing coupling facility services.

OPTION=CIA
This option helps isolate problems related to channel I/O. CIA entries are the remaining trace records from the CIO option.

OPTION=CIO
Starts tracing channel I/O for channel-attached devices and for lines attached to a communication adapter.

OPTION=CMIP
Starts tracing internal events in CMIP services and the VTAM topology agent.

OPTION=CSM
Starts tracing of the communications storage manager.

OPTION=ESC
Starts tracing execution sequence control.

OPTION=HPR
Starts tracing for HPR.

OPTION=LCS
Starts tracing LAN channel stations.

OPTION=LOCK
Starts tracing locking.

OPTION=MSG
Starts tracing messages.

OPTION=NRM
Starts tracing network resource management

OPTION=PIU
Starts tracing path information units.

OPTION=PSS
Starts tracing process scheduling services.

OPTION=SMS
Starts tracing storage management services.

OPTION=SSCP
Starts tracing the system services control point.

OPTION=TCP
Starts tracing the VTAM to TCP/IP interface events. This option is used only with the AnyNet function.

OPTION=VCNS
Starts tracing VTAM common network services.

OPTION=XBUF
Starts tracing of extended buffer list information.

OPTION=XCF
Starts tracing XCF communication.

PU=3710_pu_name
Applies only when TYPE=NETCTLR. It specifies the name of the IBM 3710 Network Controller that is to perform the trace. VTAM rejects the command if the physical unit is not known to VTAM.

SAVE
Applies to TYPE=BUF, TYPE=IO, and TYPE=STATE. It specifies whether the trace command should be saved for the resource named on the ID operand.

SAVE=YES
VTAM saves the trace command for the resource named on the ID operand. If the resource exists when this command is issued, the trace starts immediately. If the resource does not exist when this command is issued, VTAM saves the trace command and starts the trace when the resource is defined.

Note: For TYPE=BUF, TYPE=IO, and TYPE=STATE, if you start a trace with IDTYPE=RESOURCE and a CP or an SSCP (but not both) exists when the command is issued, VTAM starts the trace for the existing resource and saves the trace commands for both resources.

If both a CP and an SSCP exist when the command is issued, VTAM starts tracing for them immediately.

You can also issue this command to update a previously saved trace command.

Use the MODIFY NOTRACE command to delete a saved trace command. VTAM will not delete a saved trace command until you issue a MODIFY NOTRACE command for it, even though the resource might be created and freed or activated and deactivated several times. Saved trace commands are lost when VTAM is halted and restarted.

SAVE=NO
Does not save the MODIFY TRACE command. If the resource does not exist when you issue MODIFY TRACE, the command fails.

SCOPE
Applies when TYPE=BUF, TYPE=IO, or TYPE=GPT. It specifies the scope of the trace.

You can specify the SCOPE operand for TYPE=GPT, but it is meaningful only for the NCP node. SCOPE=ALL is assumed for a GPT trace of all other node types.

SCOPE=ALL
Starts traces for all nodes subordinate to the specified node. If an LU that is subordinate to a node is an independent LU, it is not considered to be subordinate to the node for the purpose of tracing.

SCOPE=ALL is not valid for the host PU trace or for the host intermediate routing node trace (ID=ISTIRN). If SCOPE=ALL is specified, VTAM issues a message and uses SCOPE=ONLY.

For an I/O trace of a channel-attached NCP, SCOPE=ALL provides a trace of all channel I/O, including network message traffic routed through the channel-attached NCP.

If the specified node is a model application, SCOPE=ALL turns on the trace option for the model application and starts traces for all existing dynamic applications created using the model. Traces will be started for future dynamic applications created using the model.

SCOPE=ONLY
Starts a trace only for the specified node.

SCOPE=ONLY on a GPT trace command for the NCP PU limits the trace to RUs that flow on the SSCP-PU session for the NCP.

If the specified node is a model application, SCOPE=ONLY turns on the trace option for the model application. Traces for all existing dynamic applications created using the model are unaffected. Traces will be started for future dynamic applications created using the model.

SIZE=size
Applies only to TYPE=VTAM,MODE=INT. It specifies the number of pages to be allocated for the internal trace table. Page size is 4K. Integers 1–999 can be specified.

If you specify a value less than 100, 100 will be used instead.

If the VTAM internal trace is not already started, and you omit this option, the default size is 999.

After the VTAM internal trace is started, the SIZE operand does not have a default. If successive MODIFY commands change other options, the SIZE specification remains the same until re-specified on a MODIFY command.

If the SIZE value is too small, trace information might be lost because of wraparound in the internal trace table. Also, if the SIZE operand specifies a size different from the current table size, information is lost because the trace table is freed when another table with a new size is obtained. When an attempt to increase the SIZE value fails because of insufficient storage, the internal trace table size is set to the minimum size, not the size you requested.

SUBTRACE
Specifies that SUBTRACE can be used to turn on a subset of trace entries under a trace option. Currently, two SUBTRACE types are defined; subtrace TREE is defined under the SSCP trace option and subtrace ARBP is defined under the HPR trace option.

Note: Both of the SUBTRACE options are defaulted to off. They can generate a large number of records in the VTAM trace and can incur a significant overhead, but may be necessary in some cases for diagnostic purposes. It is not recommended to activate them at VTAM start time.

SUBTRACE=ARBP
Specifies OPTION is a required keyword when SUBTRACE is specified and HPR must be one of the trace options specified when SUBTRACE=ARBP is coded. After subtrace ARBP is activated, the following trace records will be generated for the ARB algorithm processing: ARBR (Generated when ARB Responsive Mode algorithm is utilized) and ARBB (Generated when ARB Base Mode algorithm is utilized).

SUBTRACE=TREE
Specifies that OPTION is a required keyword when SUBTRACE is specified and SSCP must be one of the trace options specified when SUBTRACE=TREE is coded. After subtrace TREE is activated, the following trace records will be generated for routing trees used by APPN route computation: TRRT, TRR2, TRR3, TRR4, TRR5, HLST, and HLS2.

TRACEPT=trace_point_id
Applies to TYPE=SIT and is valid only if you are tracing connectivity subsystem (CSS) resources on an IBM 3745 Communication Controller. This operand specifies the point in the microcode at which tracing should be activated. If you omit this operand, tracing is done for all valid trace points. The TRACEPT operand allows you to limit the tracing to a single trace point if too much output is being produced.

VTAM accepts any integer in the range 1–255; however, only a few values are defined by the NCP. For information on which values are defined and what they mean, see the *NCP, SSP, and EP Diagnosis Guide*.

TYPE
Specifies the kind of trace that is to be affected. More than one kind of trace can be active at the same time, but you must start or change each trace with a separate MODIFY TRACE command.

TYPE=BUF
Starts the tracing of text that passes through VTAM buffers on the way to or from the node identified by the ID operand. The SCOPE operand can be used to extend the scope of the trace to all nodes subordinate to the specified node. This trace is useful when one of the logical units in the session is an application program in this domain.

TYPE=CNM
Starts a communication network management trace.

Note: When this option is specified, the generalized trace facility (GTF) must be active with the TRACE=USR option specified.

TYPE=EXIT
Starts the tracing of functions of the session management exit (SME).

TYPE=GPT
Starts an NCP generalized PIU trace (GPT) for the resources identified by the ID operand.

Note: The ID operand of MODIFY TRACE cannot specify:
- An NCP switched line that is a switched subarea connection
- A dynamic CDRSC

TYPE=IO
Starts a trace of I/O activity associated with the node identified by the ID operand. The SCOPE operand can be used to extend the scope of the trace to all nodes subordinate to the specified node. In addition, for an NCP major node with an active channel attachment, the SCOPE=ALL operand provides a trace of all I/O going across the channel, including cross-domain session I/O.

Note: The external VIT is now used to record the IO trace entries. PIU, NLPI, NLPO, LSNA, and MPTNFMT entries may be written for a specific IO trace invocation.

TYPE=LINE
Starts an NCP line trace for the line identified by the ID operand.

TYPE=MODULE
Starts module tracing for the options specified on the OPTION operand.

TYPE=NETCTLR
Sends a trace request to the 3710 named on the PU operand.

TYPE=SIT
Starts a scanner interface trace (SIT) through the communication scanner processor located in the IBM 3720 or 3745 Communication Controller containing the NCP identified by the line specified by the ID operand.

The scanner interface trace and the NCP line trace can be started separately, and can be active at the same time.

TYPE=SMS
Starts a storage management services (SMS) trace to record VTAM buffer pool usage data.

TYPE=STATE
Starts a resource state trace to record the changing states of resources.

TYPE=TG
Starts an NCP transmission group trace for the transmission group (TG) containing the NCP line identified by the ID operand. A line is part of a transmission group only when both the line and its subordinate link station are active. A transmission group trace can be started by naming any line within the transmission group. Once a transmission group trace is started,

another trace of the same transmission group cannot be requested by naming the same or another line within the transmission group in another MODIFY TRACE command.

If the line or its link station subsequently fails or is deactivated (that is, if the line is removed from the transmission group), the transmission group trace is ended, even though the transmission group continues to operate if there are any remaining lines in the transmission group. The trace can be restarted, naming another line in the transmission group.

The NCP line trace and the transmission group trace are mutually exclusive for a particular line. Therefore, when starting a transmission group trace, select a line that is not being used, and is not likely to be used, for a line trace.

TYPE=TSO
Starts a TSO component trace for the user ID identified by the ID operand. GTF must be active when this trace option is specified.

TYPE=VTAM
Starts the VTAM internal trace (VIT) for the components specified by the OPTION operand. If OPTION is omitted, no new component internal traces are initiated; rather, VTAM issues messages identifying the components for which the internal trace is currently active.

MODIFY USERVAR command

Create a new USERVAR:

```
►►──MODIFY procname,USERVAR──,ID=uservar_name──┬──────────────────┬──────────────────────────►
                                               └─,OPTION=UPDATE───┘

►─,VALUE=appl_name──┬──────────────────┬──┬──────────────────────────────────┬──┬──────────────────────────────────┬──►◄
                    ├─,TYPE=DYNAMIC────┤  │ ┌─,APPC=NO,UVEXIT=NO──────────┐  │ ┌─,APPC=NO,UVEXIT=NO──────────┐  │
                    └─,TYPE=──┬─DYNAMIC─┤  │ │                             │  │ │                             │  │
                              ├─STATIC──┤  │ │ ┌─YES,UVEXIT=NO───────────┐ │  │ │ ┌─YES,UVEXIT=NO───────────┐ │  │
                              └─VOLATILE┘  │ │ │                         │ │  │ │ │                         │ │  │
                                           └─┴─┴─NO,UVEXIT=──┬─YES──┬────┴─┘  └─┴─┴─NO,UVEXIT=──┬─YES──┬────┴─┘
                                                             └─NO───┘            └─NO───┘
```

Update an existing USERVAR and change the TYPE:

```
►►──MODIFY procname,USERVAR──,ID=uservar_name──┬──────────────────┬──────────────────────────►
                                               └─,OPTION=UPDATE───┘

►──┬──────────────────────┬──,TYPE=──┬─DYNAMIC─┬──┬──────────────────────────────────┬──┬──────────────────────────────────┬──►◄
   └─,VALUE=appl_name─────┘          ├─STATIC──┤  │ ┌─,APPC=NO,UVEXIT=NO──────────┐  │ ┌─,APPC=NO,UVEXIT=NO──────────┐  │
                                     └─VOLATILE┘  │ │                             │  │ │                             │  │
                                                  └─┴─┴─YES,UVEXIT=NO─────────────┴─┘  └─┴─┴─YES,UVEXIT=NO─────────────┴─┘
                                                    │ │                             │    │ │                             │
                                                    └─┴─NO,UVEXIT=──┬─YES──┬────────┴─┘  └─┴─NO,UVEXIT=──┬─YES──┬────────┴─┘
                                                                    └─NO───┘              └─NO───┘
```

Update an existing USERVAR, leaving the TYPE unchanged:

```
►►──MODIFY procname,USERVAR──,ID=uservar_name──┬──────────────────┬──────────────────────────►
                                               └─,OPTION=UPDATE───┘

►─,VALUE=appl_name──┬──────────────────────────────────┬──┬──────────────────────────────────┬──►◄
                    │ ┌─,APPC=NO,UVEXIT=NO──────────┐  │ ┌─,APPC=NO,UVEXIT=NO──────────┐  │
                    │ │                             │  │ │                             │  │
                    │ │ ┌─YES,UVEXIT=NO───────────┐ │  │ │ ┌─YES,UVEXIT=NO───────────┐ │  │
                    │ │ │                         │ │  │ │ │                         │ │  │
                    └─┴─┴─NO,UVEXIT=──┬─YES──┬────┴─┘  └─┴─┴─NO,UVEXIT=──┬─YES──┬────┴─┘
                                      └─NO───┘            └─NO───┘
```

Delete a USERVAR:

```
►►──MODIFY procname,USERVAR──,ID=uservar_name──,OPTION=DELETE──────────────────────────►

►──┬──────────────────────┬──────────────────────────────────────────────────────────────►◄
   └─,VALUE=appl_name─────┘
```

Abbreviations

Operand	Abbreviation
MODIFY	F
NO	N
OPTION	OPT
OPTION=DELETE	OPT=DEL
OPTION=UPDATE	OPT=UP
TYPE=DYNAMIC	TYPE=DYN

Operand	Abbreviation
TYPE=STATIC	TYPE=STA
TYPE=VOLATILE	TYPE=VOL
VALUE=value	VAL=value
YES	Y

When using an abbreviation in place of an operand, code the abbreviation exactly as shown in the table. For example, when coding the abbreviation for OPTION=DELETE, code only OPT=DEL. Do not code OPTION=DEL.

Purpose

The MODIFY USERVAR command is issued by a network operator or application subsystem to define, change, or delete the name of an application associated with a USERVAR.

You cannot create or modify automatic (VTAM-managed) USERVARs using the MODIFY command; they are created and maintained by VTAM. If you issue a MODIFY command that specifies the name of an automatic USERVAR as its target, VTAM assumes that you are taking over control of the USERVAR (by changing its class from automatic to user) and that you are responsible for any future updates to that USERVAR. Whenever an automatic USERVAR is changed to a user-managed USERVAR, the operator should delete the USERVAR for VTAM to take control of it once again.

Operands

procname

The procedure name for the command. If *procname* in the START command was specified as *startname.ident*, where *startname* is the VTAM start procedure and *ident* is the optional identifier, either *startname.ident* or *ident* can be specified for *procname*.

If *procname* in the START command was *startname*, *startname* must be specified for *procname*.

APPC

Specifies how the USERVAR ID affects LU 6.2 sessions that were established with APPC/VTAM application programs.

This operand is valid only when the application program specified on the VALUE operand executes on the same host that is processing this operator command. This operand is valid only when OPTION=UPDATE and UVEXIT=NO are specified or assumed by default.

If you specify OPTION=DELETE, APPC=NO is assumed by default. If you specify APPC=YES and UVEXIT=YES, both APPC=NO and UVEXIT=NO are assumed by default.

If you are updating an existing USERVAR and you do not specify a value for APPC, the previously defined value will be replaced with the default value found in the operation-level USS table (ISTINCNO). The IBM-supplied default value is APPC=NO.

APPC=NO

Specifies that the USERVAR ID is not used to replace the application

program's name when establishing LU 6.2 sessions for any application programs identified in the VALUE operand.

APPC=YES
Specifies that the USERVAR ID is used to replace the application program's name when establishing LU 6.2 sessions only for APPC/VTAM application programs identified in the VALUE operand.

If an LU 6.2 application uses a USERVAR ID with the operand APPC=YES, you cannot define another USERVAR ID with APPC=YES for that application.

ID=uservar_name
Specifies the USERVAR. It can be used to specify any valid USERVAR (1–8 alphanumeric characters, the first of which must be alphabetic). VTAM uses this USERVAR during the logon process to send the session request to the currently active application subsystem. The USERVAR is also specified in the LOGCHAR operand used to add an entry to the interpret table.

Note: If ID is specified using a reserved name (for example, ID=VTAM), inconsistent results will occur.

OPTION
Specifies whether the USERVAR identified by the ID operand is to be assigned a value, have its current value changed, or be deleted.

OPTION=UPDATE
Specifies that the USERVAR identified by the ID operand is to be assigned a value, or that the current value of an existing USERVAR is to be changed.

OPTION=DELETE
Specifies that the USERVAR identified by the ID operand is to be deleted. If used with the VALUE operand, the USERVAR is deleted only if the specified value matches that of the USERVAR.

TYPE
Specifies the type (or attributes) of a USERVAR.

TYPE=DYNAMIC
Specifies that, in event of failure, the value of the USERVAR identified by the ID operand is to be queried again by those SSCPs having automatic USERVARs with the same name. The default value for the TYPE operand is used only when a USERVAR table entry is being created. It is not used on each execution of the MODIFY USERVAR command.

TYPE=STATIC
Specifies that the value of the USERVAR will not change. Those SSCPs having automatic USERVARs with the same name only need to query the USERVAR if the value is unknown.

TYPE=VOLATILE
Specifies that the value of the USERVAR identified by the ID operand is to be queried again before any session setup is attempted because the value is likely to change.

UVEXIT
Specifies whether an installation-wide exit routine is to be used for the USERVAR. For more information about installation-wide exit routines identified by the UVEXIT operand, see *z/OS Communications Server: SNA Customization*. This operand is valid only when APPC=NO and OPTION=UPDATE are specified or assumed by default.

If you specify OPTION=DELETE, UVEXIT=NO is assumed by default. If you specify APPC=YES and UVEXIT=YES, both APPC=NO and UVEXIT=NO are assumed by default.

If you are updating an existing USERVAR and you do not specify a value for UVEXIT, the previously defined value will be replaced with the default value found in the operation-level USS table (ISTINCNO). The IBM-supplied default value is UVEXIT=NO.

UVEXIT=NO
Specifies that the USERVAR installation exit is not used for this USERVAR.

UVEXIT=YES
Specifies that the USERVAR installation exit is used for this USERVAR.

VALUE=appl_name
Specifies the name of an application program. Any session initiated with the USERVAR name specified in the ID operand is initiated with the application program named by *appl_name*.

Note: If VALUE is specified using a reserved name (for example VALUE=VTAM), inconsistent results will occur. The name can be a network-qualified name. If *appl_name* is a network-qualified name, the name (both the network identifier and the resource name) is considered to be a real name and cannot change.

If *appl_name* is not a network-qualified name, the name uses the network identifier that was specified on the session request if one is specified. If a network identifier is not specified on the session request, and if the USERVAR is in the OLU domain, the name can represent any resource with that name in any network and the network identifier is filled in when a resource is found with that name. If the USERVAR is *not* in the OLU domain, the value must be predefined in the VTAM that contains the USERVAR. In addition, if the USERVAR is represented by a CDRSC, the CDRSC must be predefined *with a network identifier*.

Notes:

1. When a VTAM in an APPN network receives a request containing a USERVAR name, the user-managed USERVAR must be defined on the same node as the real resource. Therefore, when the real resource is on an end node, define the USERVAR at the end node and not at its network node server.
2. When an interchange node receives a request containing a USERVAR name from the APPN network, the real resource must be located on the interchange node or through an adjacent SSCP attached to the interchange node (that is, not in the APPN network attached to the interchange node).

The output from the DISPLAY USERVAR command for this USERVAR includes network-qualified names only if *appl_name* is a network-qualified name on the MODIFY USERVAR command.

If *appl_name* is an ACB name, and the ACB name matches the name on the APPL definition statement, then you can use a network-qualified ACB name.

MODIFY VTAMOPTS command

```
►►──MODIFY procname,VTAMOPTS──┬──────────────────────────────────┬──►
                              └─,AFFDELAY=number_of_seconds──────┘

►──┬──────────────────┬──┬──────────────────────────────────────┬──►
   └─,ALSREQ=──┬─NO──┬─┘  │                   (1)                │
               └─YES─┘    └─,API64R=──┬─NO──┬──────────────────┘
                                     └─YES─┘

                                   (2)
►──┬──────────────────────────────┬──┬──────────────────────────────►
   └─,APPNCOS=class-of-service_name┘  └─,ASIRFMSG=──┬─ALLSSCP─┬─┘
                                                    ├─OLUSSCP─┤
                                                    └─NONE────┘

►──┬──────────────────┬──┬──────────────────────┬──┬──────────────────►
   └─,AUTHLEN=──┬─NO──┬─┘  └─,AUTORTRY=──┬─AUTOCAP─┬─┘  └─,AUTOTI=time_period─┘
                └─YES─┘                  ├─CDRM────┤
                                         ├─ALL─────┤
                                         └─NONE────┘

                          (3)                          (4)
►──┬──────────────────┬──┬──────────────────────────────────────────►
   └─,BNDYN=──┬─NONE────┬─┘  └─,BNORD=──┬─DEFINED──┬─┘
              ├─LIMITED─┤                └─PRIORITY─┘
              └─FULL────┘

►──┬──────────────────────────────────────────────────────────────┬──┬──────────────────────────────────────────►
   └─,BSCMDRS=──┬─STATS──────────────────────────────────────────┬─┘  │                                          │
                ├─NOSTATS─────────────────────────────────────────┤    └─,CDRDYN=──┬─YES─┬─┘
                ├─(,INOPS)────────────────────────────────────────┤                └─NO──┘
                ├─(,NOINOPS)──────────────────────────────────────┤
                └─(──┬─STATS──┬─,INOPS──┬──────────┬──)──────────┬─┘
                     │        └─,NOINOPS┘          │             │
                     └─NOSTATS──┬─,INOPS──┬──────────┘             │
                                └─,NOINOPS┘                        │

                                                                 (6)
►──┬──────────────────────────────────────────────────────────┬──┬──────────────────────────────────────────►
   │                                   (5)                    │  └─,CMPMIPS=compression_ratio──────────────┘
   └─,CDSREFER=number_of_CDSs──────────────────────────────────┘

►──┬──────────────────┬──┬──────────────────────────────────────────►
   └─,CNNRTMSG=──┬─SUPPRESS─┬─┘  └─,CMPVTAM=compression_level──────┘
                 └─NOSUPP───┘

                          (7)
►──┬──────────────────┬──┬──────────────────────────────────────────►
   └─,CONNTYPE=──┬─APPN──┬─┘
                 └─LEN───┘
```

```
                                   (8)
►──┬──────────────────────────────┬──┬──────────────────────────────────────►
   └─,CPCP=──┬─YES──────────┬─┘  └─,CSALIMIT=──┬─value──────────────┬─┘
             ├─NO───────────┤                  └─(value──┬──────┬──)─┘
             ├─LEASED───────┤                            └─,F───┘
             └─SWITCHED─────┘

►──┬──────────────────────────────┬──┬──────────────────────────────────────►
   └─,CSA24=──┬─value──────────┬─┘  └─,DIALRTRY=──┬─YES──┬─┘
              └─(value──┬──────┬──)─┘              └─NO───┘
                        └─,F───┘

                                                (9)                   (10)
►──┬──────────────────────────────┬──┬──────────────────────────┬──────────►
   └─,DIRSIZE=number_of_resources─┘  └─,DIRTIME=time_period──────┘

►──┬──────────────────────────────────────────┬──┬──────────────────────────►
   └─,DISCNTIM=(time_period1,time_period2)────┘  └─,DLRORDER=──┬─STATNID──┬─┘
                                                               └─CPNAME───┘

►──┬──────────────────────────────┬──┬──────────────────────────────────────►
   └─,DSPLYDEF=number_of_messages─┘  └─,DSPLYWLD=──┬─FULLWILD──┬─┘
                                                   ├─NOWILD────┤
                                                   ├─OPERONLY──┤
                                                   └─POAONLY───┘

►──┬──────────────────────────────┬──┬──────────────────────────────────────►
   └─DUPDEFS=──┬─ALL────┬─┘  └─,DYNDLGMD=──┬─logmode_name──┬─┘
               ├─NONE───┤                  └─NONE──────────┘
               ├─APPL───┤
               └─DEPLU──┘

►──┬──────────────────────────────┬──┬──────────────────────────────────────►
   └─,DYNMODTB=──┬─table_name──┬─┘  └─,ENCRPREF=──┬─NONE──┬─┘
                 └─NONE────────┘                  └─value─┘

                                   (11)
►──┬──────────────────────────────┬──┬──────────────────────────────────────►
   └─,ENCRYPTN=──┬─YES────┬─┘  └─,ESIRFMSG=──┬─ALLSSCP──┬─┘
                 ├─NO─────┤                  ├─OLUSSCP───┤
                 ├─CCA────┤                  └─NONE──────┘
                 ├─CUSP───┤
                 ├─24─────┤
                 └─31─────┘

►──┬──────────────────────────────┬──┬──────────────────────────────────────►
   └─,FSIRFMSG=──┬─ALLSSCP──┬─┘  └─HOTIOTRM=percentage_of_buffer_pool──────┘
                 ├─OLUSSCP───┤
                 └─NONE──────┘

►──┬──────────────────────────────┬──────────────────────────────────────────►
   └─,HPRNCPBF=──┬─YES──┬─┘
                 └─NO───┘
```

MODIFY VTAMOPTS

```
►──┬──────────────────────────────────────────────────────────────────────────────────────────────────────────────►
   └─HPRPST=(low_limit,med_limit,high_limit,network_limit)─┘

►──┬──────────────────────────────────────────────────────────────────────────────────────────────────────────────►
   │                                                                                                              │
   │                                                                                                              │
   │                                                                                                              │
```

```
►──┬──────────────────────────────────────────┬──┬──────────────────────────────►
   └OSIEVENT=──┬─ALL──────────────────────────┬┘   └OSIMGMT=──┬─YES─┬┘
               ├─NONE─────────────────────────┤                └─NO──┘
               │                       (18)   │
               └─PATTERNS─────────────────────┘

►──┬──────────────────────────────────────────┬──┬──────────────────────────────►
   │                          (19)            │  └,PDTRCBUF=number_of_buffers────┘
   └OSITOPO=──┬─ALLCDRSC─────────────────────┬┘
              └─ILUCDRSC──────────────────────┘

►──┬──────────────────────────────────────────┬──┬──────────────────────────────►
   └,PIUMAXDS=calculation_factor──────────────┘  └,PLUALMSG=──┬─SUPPRESS─┬┘
                                                               └─NOSUPP───┘

►──┬──────────────────────────────────────────┬──────────────────────────────────►
   └,PPOLOG=──┬─YES─┬┘
              └─NO──┘

►──┬──────────────────────────────────────────────────────────────────────────────►
   └PSRETRY=(low_tp_int,med_tp_int,high_tp_int,network_tp_int)──────────────────┘

►──┬──────────────────────────────────────────┬──┬──────────────────────────────►
   └,PSSTRACE=──┬─NORB─┬──────────────────────┘  └PSWEIGHT=──┬─EQUAL────┬──────────┘
                ├─IRB──┤                                     ├─LESSTHAN─┤
                ├─SRB──┤                                     └─SAMEROUT─┘
                └─BOTH─┘

                                   (20)                                  (21)
►──┬──────────────────────────────────────────┬──┬──────────────────────────────►
   └,RESUSAGE=usage_limit──────────────────────┘  └,ROUTERES=resistance_value────┘

►──┬──────────────────────────────────────────┬──┬──────────────────────────────►
   └,SAVERSCV=──┬─(,FREE)──────────────────────┬┘  └,SAWMXQPK=calculation_factor──┘
                ├─(,KEEP)──────────────────────┤
                ├─NO───────────────────────────┤
                ├─(NO,FREE)────────────────────┤
                ├─(NO,KEEP)────────────────────┤
                ├─YES──────────────────────────┤
                ├─(YES,FREE)───────────────────┤
                ├─(YES,KEEP)───────────────────┤
                ├─SAWDATA──────────────────────┤
                ├─(SAWDATA,FREE)───────────────┤
                └─(SAWDATA,KEEP)───────────────┘
```

MODIFY VTAMOPTS

```
►──┬──────────────
```

```
►──┬──────────────────────────────┬──┬──────────────────┬──────────────────────────────►
   └─,VARYWLD=─┬─FULLWILD─┬─┘  └─VFYRED=─┬─YES─┬─┘
               ├─NOWILD───┤               └─NO──┘
               ├─OPERONLY─┤
               └─POAONLY──┘

                                   (28)
►──┬──────────────────────────────┬──┬──────────────────────────────────────────────────►
   └─VFYREDTI=─┬─OFF──────────────┬─┘  └─,VOSDEACT=─┬─YES─┬─┘
               ├─0────────────────┤                 └─NO──┘
               └─reduction_timer──┘

                        (29)                    (30)
►──┬──────────────────┬──┬──────────────────────┬──────────────────────────────────────►◄
   └─,VRTG=─┬─YES─┬─┘  └─,VRTGCPCP=─┬─YES─┬─┘
            └─NO──┘                 └─NO──┘
```

Notes:

1 API64R can be modified only when running in ESAME mode.

2 APPNCOS can be modified only if NODETYPE was specified during VTAM START processing.

3 BNDYN can be modified only if BN=YES was specified during VTAM START processing.

4 BNORD can be modified only if BN=YES was specified during VTAM START processing.

5 CDSREFER can be modified only if NODETYPE=NN and CDSERVR=NO were specified during VTAM START processing.

6 CMPMIPS is meaningful only if the value for CMPVTAM is greater than 1.

7 CONNTYPE can be modified only if NODETYPE was specified during VTAM START processing.

8 CPCP can be modified only if NODETYPE was specified during VTAM START processing.

9 DIRSIZE can be modified only if NODETYPE=NN was specified during VTAM START processing.

10 DIRTIME can be modified only if NODETYPE=NN was specified during VTAM START processing.

11 The ENCRYPTN start option cannot be modified if ENCRYPTN=NO was specified during VTAM START processing.

12 When altering the INOPDUMP VTAM start option, the resulting INOPDUMP status is propagated to all TRLEs in the TRL major node and becomes the default status for any subsequently activated TRLEs.

13 IPADDR can be modified but the new value will not be used until all lines in the XCA major node used for Enterprise Extender are inactive. However, displays of VTAM start options will show the new value immediately. Any susequent line activation from the Enterprise Extender XCA major node will make use of the new IPADDR value.

14 The IQDCHPID option controls which IQD CHPID (and related subchannel devices) VTAM selects to dynamically build the iQDIO (IUTIQDIO) MPC group. The IUTIQDIO MPC group is used for TCP/IP dynamic XCF

communications within this zSeries system. Although this option can be modified (and the modification will immediately be displayed) while the IUTIQDIO MPC group is currently active, any modifications will have the following effects:

- modified from ANY (or CHPID) to NONE — no effect on current usage but blocks subsequent activations
- modified from NONE to ANY (or CHPID) — no effect on current usage but allows subsequent activations
- modified from CHPID_X to CHPID_Y — no effect on current usage

Note: VTAM only uses the CHPID value when building the IUTIQDIO MPC group. To change CHPIDs for an active MPC group, the following must be done:

1. All TCP/IP iQDIO (HiperSocket) devices must be stopped.
2. Make any necessary HCD/IOCDS changes.
3. Verify that new subchannel devices are varied online.
4. Verify that the MPC group has deactivated (with no usage, it times out after approximately two minutes).
5. Modify IQDCHPID=CHPID (to new CHPID).
6. Restart the TCP/IP iQDIO device or devices.

Note: In order to use iQDIO communications, the processor must have the necessary hardware support. If the processor does not support iQDIO communications, then modifications to this start option will not be accepted and the IQDCHPID option will not be displayed (displayed as ***NA***).

15 MAXLOCAT can be modified only if NODETYPE was specified during VTAM START processing.

16 NNSPREF can be modified only if NODETYPE=EN was specified during VTAM START processing.

17 NUMTREES can be modified only if NODETYPE=NN was specified during VTAM START processing.

18 OSIEVENT=PATTERNS is not valid when OSIMGMT=YES.

19 OSITOPO=ALLCDRSC is not valid when OSIMGMT=YES.

20 RESUSAGE can be modified only if NODETYPE=NN was specified during VTAM START processing.

21 ROUTERES can be modified only if NODETYPE=NN was specified during VTAM START processing.

22 SNVC can be modified only if BN=YES was specified during VTAM START processing.

23 SORDER can be modified only if VTAM has been started as an interchange node or a migration data host.

24 SRCOUNT is meaningful only when SRCHRED=ON.

25 SRTIMER is meaningful only when SRCHRED=ON.

26 SSEARCH can be modified only if NODETYPE=NN was specified during VTAM START processing.

27 TCPNAME can be modified but the new value will not be used until all lines in

the XCA major node used for Enterprise Extender are inactive. However, displays of VTAM start options will show the new value immediately. Any subsequent line activation from the Enterprise Extender XCA major node will make use of the new TCPNAME value.

28 VFYREDTI can be modified only if NODETYPE=NN was specified during VTAM START processing.

29 VRTG can be modified only if NODETYPE and HOSTSA are specified.

30 VRTGCPCP can be modified only if NODETYPE and HOSTSA are specified.

Abbreviations

Operand	Abbreviation
MODIFY	F
MSGLEVEL	MSGLVL
PLUALMSG=NOSUPP	PLUALMSG=NOSUP
PLUALMSG=SUPPRESS	PLUALMSG=SUPP
SLUALMSG=NOSUPP	SLUALMSG=NOSUP
SLUALMSG=SUPPRESS	SLUALMSG=SUPP

When using an abbreviation in place of an operand, code the abbreviation exactly as shown in the table. For example, when coding the abbreviation for PLUALMSG=SUPPRESS, code only PLUALMSG=SUPP.

Purpose

The MODIFY VTAMOPTS (VTAM start options) command enables you to change certain values that might have been specified on VTAM start options. See the *z/OS Communications Server: SNA Resource Definition Reference* for descriptions of each of the start options that you can change with this command.

There are no default values on the MODIFY VTAMOPTS command. Only the values that you specify are affected. Operands that are not specified on the command are not affected in any way.

Note: If a start option affects individual resources, and you change the value of the start option with this command, the change does not go into effect until the major nodes for those resources are deactivated and reactivated. The command takes effect for major nodes that are activated after you issue this command and for dynamic cross-network resources that are dynamically defined after the command is issued.

Operands

procname

The procedure name for the command. If *procname* in the START command was specified as *startname.ident*, where *startname* is the VTAM start procedure and *ident* is the optional identifier, either *startname.ident* or *ident* can be specified for *procname*.

If *procname* in the START command was *startname*, *startname* must be specified for *procname*.

START command

Starting VTAM in an MVS environment:

```
►►──START procname,,,(─┤ Options ├─)──────────────────────────────────►◄
```

Notes:

1. The start options are listed in this section alphabetically; however, you can code them in any order.
2. Precede the option list with three commas and enclose the group of options in parentheses.
3. Start options that are entered on the START command must be separated by commas. Do not leave any blanks between options.

Options:

```
├──NETID=network_id──SSCPID=sscp_id──SSCPNAME=name──────────────────────►

                 ┌─AFFDELAY=600──────────────┐   ┌─ALSREQ=NO──────┐   ┌─API64R=YES─┐
►────────────────┤                           ├───┤                ├───┤            ├──────►
                 └─AFFDELAY=number_of_seconds─┘   └─ALSREQ=──┬─YES─┬─┘   └─API64R=NO──┘
                                                             └─NO──┘

                              (1)
                 ┌─APPNCOS=NONE──────────────┐   ┌─ASIRFMSG=OLUSSCP──┐
►────────────────┤                           ├───┤                   ├──────►
                 └─APPNCOS=class-of-service_name─┘   └─ASIRFMSG=──┬─ALLSSCP─┬─┘
                                                                  ├─OLUSSCP─┤
                                                                  └─NONE────┘

                 ┌─ASYDE=TERM──────┐   ┌─AUTHLEN=YES──────┐   ┌─AUTORTRY=AUTOCAP──────┐
►────────────────┤                 ├───┤                  ├───┤                       ├──────►
                 └─ASYDE=──┬─KEEP─┬─┘   └─AUTHLEN=──┬─NO──┬─┘   └─AUTORTRY=──┬─AUTOCAP─┬─┘
                           └─TERM─┘                 └─YES─┘                   ├─CDRM───┤
                                                                              ├─ALL────┤
                                                                              └─NONE───┘

                                                   (2)                  (3)
                 ┌─AUTOTI=0──────────────┐   ┌─BN=NO──────┐   ┌─BNDYN=LIMITED──────┐
►────────────────┤                       ├───┤            ├───┤                    ├──────►
                 └─AUTOTI=time_period────┘   └─BN=──┬─NO──┬─┘   └─BNDYN=──┬─LIMITED─┬─┘
                                                    └─YES─┘               ├─NONE───┤
                                                                          └─FULL───┘
```

```
                    (4)
 ┌─BNORD=PRIORITY──────┐   ┌─BSCMDRS=(STATS,INOPS)──────────────────┐
 ├─────────────────────┤   ├────────────────────────────────────────┤
 └─BNORD=─┬─PRIORITY─┬─┘   └─BSCMDRS=─┬─STATS──────────────────────┬─┘
          └─DEFINED──┘                ├─NOSTATS────────────────────┤
                                      ├─(,INOPS)───────────────────┤
                                      ├─(,NOINOPS)─────────────────┤
                                      └─(─┬─STATS─┬─,INOPS─┬─────┬─)─┘
                                          │       └─,NOINOPS─┘     │
                                          └─NOSTATS─┬─,INOPS─┬─────┘
                                                    └─,NOINOPS─┘

 ┌─BSCTMOUT=286────────┐
 ├─────────────────────┤
 └─BSCTMOUT=units_of_time─┘   └─poolname=─┬─()──────────────────┬─┘
                                          └─┤ Buffer Pool Values ├─┘

 ┌─CACHETI=8───────────┐   ┌─CDRDYN=YES──────┐
 ├─────────────────────┤   ├─────────────────┤
 └─CACHETI=number_of_minutes─┘   └─CDRDYN=─┬─NO─┬─┘
                                           └─YES─┘

                                   (5)                 (6)
 ┌─CDRSCTI=8M──────────┐   ┌─CDSERVR=NO──────┐   ┌─CDSREFER=1──────────┐
 ├─────────────────────┤   ├─────────────────┤   ├─────────────────────┤
 └─CDRSCTI=timeout_value─┘   └─CDSERVR=─┬─YES─┬─┘   └─CDSREFER=number_of_CDSs─┘
                                        └─NO──┘

                                   (7)
 ┌─CINDXSIZ=8176───────┐   ┌─CMPMIPS=100─────────┐
 ├─────────────────────┤   ├─────────────────────┤
 └─CINDXSIZ=table_size─┘   └─CMPMIPS=compression_ratio─┘

 ┌─CMPVTAM=0───────────┐   ┌─CNMTAB=ISTMGC00─────┐
 ├─────────────────────┤   ├─────────────────────┤
 └─CMPVTAM=compression_level─┘   └─CNMTAB=cnm_table_name─┘

 ┌─CNNRTMSG=SUPPRESS───┐   ┌─COLD─┐   ┌─CONFIG=00───────────┐
 ├─────────────────────┤   ├──────┤   ├─────────────────────┤
 └─CNNRTMSG=─┬─SUPPRESS─┬─┘   └─WARM─┘   └─CONFIG=─┬─file_id───┬─┘
             └─NOSUPP───┘                          └─file_name─┘

                    (8)                                  (9)
 ┌─CONNTYPE=APPN───┐   ┌─CPCDRSC=NO──────┐   ┌─CPCP=LEASED─────────┐
 ├─────────────────┤   ├─────────────────┤   ├─────────────────────┤
 └─CONNTYPE=─┬─APPN─┬─┘   └─CPCDRSC=─┬─YES─┬─┘   └─CPCP=─┬─YES───────┬─┘
             └─LEN──┘               └─NO──┘             ├─NO────────┤
                                                        ├─LEASED────┤
                                                        └─SWITCHED──┘
```

START

```
CSALIMIT=0                    CSA24=0        DATEFORM=MDY
CSALIMIT=value                CSA24=value    DATEFORM=MDY
         (value,F)                                      DMY
                                                        YMD

                                   (10)
DIALRTRY=YES                  DIRSIZE=0
DIALRTRY=YES                  DIRSIZE=number_of_resources
         NO

            (11)
DIRTIME=8D                    DISCNTIM=(15,0)
DIRTIME=time_period           DISCNTIM=(time_period1,time_period2)

DLRORDER=STATNID              DLRTCB=32
DLRORDER=STATNID              DLRTCB=number_of_task_control_blocks
         CPNAME

            (12)                   (13)
DLURSAW=YES                   DSPLYDEF=100
DLURSAW=YES                   DSPLYDEF=number_of_messages
        NO

DSPLYMAX=65535                DSPLYWLD=FULLWILD
DSPLYMAX=number_of_messages   DSPLYWLD=FULLWILD
                                      NOWILD
                                      OPERONLY
                                      POAONLY

                                   (14)
DUPDEFS=ALL                   DYNADJCP=YES          DYNASSCP=YES
DUPDEFS=ALL                   DYNADJCP=YES          DYNASSCP=YES
        NONE                          NO                    NO
        APPL
        DEPLU

DYNDLGMD=NONE                                       (15)
DYNDLGMD=logmode_name         DYNHPPFX=prefix
         NONE

DYNLU=NO                      DYNMODTB=NONE         DYNPUPFX=CN
DYNLU=YES                     DYNMODTB=table_name   DYNPUPFX=prefix[14]
      NO                               NONE
```

START

```
 ┌─DYNVNPFX=CNV──────────┐   ┌─ENCRPREF=NONE──────┐
►┤                       ├──┤                     ├──────────────────►
 └─DYNVNPFX=──prefix¹⁴──┘   └─ENCRPREF=─┬─NONE─┬─┘
                                        └─value─┘

 ┌─ENCRYPTN=YES──────────┐   ┌─ENHADDR=NO────┐   ┌─ESIRFMSG=ALLSSCP────┐
►┤                        ├──┤               ├──┤                     ├──►
 └─ENCRYPTN=─┬─YES──────┬─┘   └─ENHADDR=─┬─NO─┬─┘   └─ESIRFMSG=─┬─ALLSSCP─┬─┘
             ├─NO───────┤                └─YES─┘                 ├─OLUSSCP─┤
             │     (16) │                                        └─NONE───┘
             ├─CCA──────┤
             ├─CUSP─────┤
             ├─24───────┤
             └─31───────┘

 ┌─FLDTAB=ISTMSFLD────────┐   ┌─FSIRFMSG=OLUSSCP────┐   ┌─GWSSCP=YES──┐
►┤                        ├──┤                     ├──┤             ├──►
 └─FLDTAB=─┬─table_name─┬─┘   └─FSIRFMSG=─┬─ALLSSCP─┬─┘   └─GWSSCP=─┬─YES─┬─┘
           └─NONE───────┘                ├─OLUSSCP─┤               └─NO──┘
                                         └─NONE───┘

 ┌─HNTSIZE=4080──────────┐   ┌─HOSTPU=ISTPUS──────────────┐
►┤                       ├──┤                            ├──────────────►
 └─HNTSIZE=table_size────┘   └─HOSTPU=host_subarea_pu_name─┘

 ┌─HOSTSA=1──────────────────┐   ┌─HOTIOTRM=0──────────────────────┐
►┤                           ├──┤                                 ├──►
 └─HOSTSA=subarea_number─────┘   └─HOTIOTRM=percentage_of_buffer_pool┘
                       (17)

            (18)
 ┌─HPR=RTP──────────┐   ┌─HPRNCPBF=NO──────┐
►┤                  ├──┤                   ├──────────────────────────►
 └─HPR=─┬─ANR──────┬─┘   └─HPRNCPBF=─┬─YES─┬─┘
        ├─RTP──────┤                 └─NO──┘
        ├─NONE─────┤
        ├─(RTP,ANR)┤
        ├─(RTP,NONE)┤
        └─(ANR,NONE)┘

 ┌─HPRPST=(8M,4M,2M,1M)──────────────────────────────┐
►┤                                                   ├──────────────►
 └─HPRPST=(low_limit,med_limit,high_limit,network_limit)┘

                                   (19)
 ┌─HSRTSIZE=9973──────────────────┐   ┌─INITDB=ALL──────┐
►┤                                ├──┤                 ├──────────────►
 └─HSRTSIZE=number_of_queue_pointers┘   └─INITDB=─┬─ALL──┬─┘
                                                  ├─DIR──┤
                                                  ├─TOPO─┤
                                                  └─NONE─┘
```

START

```
►─┬─INOPDUMP=OFF──────────┬──────────────────────────────────────►
  │                       │
  └─INOPDUMP=─┬─ON──────┬─┘
              │     (20)│
              └─OFF─────┘

►─┬─IOINT=180──────────────┬─┬─IOMSGLIM=2147483647──────────────┬──────►
  │                        │ │                                  │
  └─IOINT=number_of_seconds┘ └─IOMSGLIM=number_of_message_pairs─┘

►─┬─IOPURGE=0──────────────┬──┬──────────────────────────┬──────────┤
  │                        │  │                     (21) │
  └─IOPURGE=timeout_value──┘  └─IPADDR=ip_address────────┘
```

Notes:

1 APPNCOS is meaningful only if the NODETYPE start option is also used.

2 BN is meaningful only if the NODETYPE=NN start option is also used.

3 BNDYN is meaningful only if the BN=YES start option is also used.

4 BNORD is meaningful only if the BN=YES start option is also used.

5 CDSERVR is meaningful only if the NODETYPE=NN start option is also used.

6 CDSREFER is meaningful only if the NODETYPE=NN and CDSERVR=NO start options are also used.

7 The CMPMIPS start option is meaningful only if the value for CMPVTAM is greater than 1.

8 CONNTYPE is meaningful only if the NODETYPE start option is also used.

9 CPCP is meaningful only if the NODETYPE start option is also used.

10 DIRSIZE is meaningful only if the NODETYPE=NN start option is also used.

11 DIRTIME is meaningful only if the NODETYPE=NN start option is also used.

12 DLURSAW is meaningful only if the NODETYPE=NN start option is also used.

13 If the DSPLYMAX start option value is less than 100, that value is the default for DSPLYDEF.

14 DYNADJCP is meaningful only if the NODETYPE start option is also used.

15 Two character prefix.

16 ENCRYPTN=CCA needs to be coded when Triple Des Encryption is desired.

17 HOSTSA specifies the subarea number of this VTAM. If HOSTSA is not coded, then a default subarea number of 1 is used.

18 HPR is meaningful only if NODETYPE is also used.

19 INITDB is meaningful only if the NODETYPE=NN start option is also used.

20 INOPDUMP status is propagated to resources that are defined within a TRLE when the entry is activated and the TRLE InOpDump status has not been explicitly set.

21 The IPADDR start option must be specified in order to initiate an Enterprise Extender link.

```
                                                  (2)
  ┌─IQDCHPID=ANY──────────────┐  ┌─IQDIOSTG=MAX──────┐  ┌─IRNSTRGE=0──────┐
  │                           │  │                   │  │                 │
  └─IQDCHPID=──┬─ANY──┬──────┘  └─IQDIOSTG=──┬─MAX─┬─┘  └─IRNSTRGE=size─┘
               │      │ (1)                  │     │
               ├─NONE─┤                      ├─AVG─┤
               │      │                      │     │
               └─CHPID┘                      └─MIN─┘

  ┌─ISTCOSDF=INDLU────────────┐
  │                           │  ┌─LIMINTCP=number_of_seconds─┐
  └─ISTCOSDF=──┬─ALL──────────┤
               ├─APPL─────────┤
               ├─DEPLU────────┤
               ├─INDLU────────┤
               ├─NONE─────────┤
               └─(──┬─APPL──┬─)
                    ├─DEPLU─┤
                    └─INDLU─┘

            (3)
  ┌─LIST=00───────────────────┐
  │                           │  ┌──────────────────────────────────────┐
  └─LIST=start_option_list_id─┘  │                                  (4) │
                                 └─LISTBKUP=──┬─start_option_list_id─┬──┘
                                              ├─DEFAULTS─────────────┤
                                              └─PROMPT───────────────┘

  ┌──────────────────────────────┐
  │                              │
  └─MAINTLVL=maintenance_level───┘

                  (5)
  ┌─MAXLOCAT=5000──────────────────────────────┐  ┌─MAXLURU=6144──────┐
  │                                            │  │                   │
  └─MAXLOCAT=max_locate_congestion_threshhold──┘  └─MAXLURU=ru_length─┘

  ┌─MAXSSCPS=10──────────────────┐  ┌─MAXSUBA=15──────────────────────┐
  │                              │  │                                 │
  └─MAXSSCPS=number_of_SSCPs─────┘  └─MAXSUBA=maximum_subarea_number──┘
```

START

```
►─┬─MIHTMOUT=1800──────────────────┬─┬─MSGLEVEL=BASE──────────┬─┬─MSGMOD=NO──────────┬──►
  │                                │ │                        │ │                    │
  └─MIHTMOUT=units_of_time─────────┘ └─MSGLEVEL=─┬─BASE──┬────┘ └─MSGMOD=─┬─NO──┬──┘
                                                 ├─V4R1──┤                   └─YES─┘
                                                 ├─V4R2──┤
                                                 ├─V4R3──┤
                                                 ├─V4R4──┤
                                                 └─CS390─┘

►─┬─MXSAWBUF=10000──────────────────┬─┬─MXSSCPRU=4096──────┬──────────────────────────►
  │                                 │ │                    │
  └─MXSAWBUF=number_of_buffers──────┘ └─MXSSCPRU=ru_length─┘

►─┬─MXSUBNUM=511──────────┬──────────────────────────────────────────────────────────►
  │                       │
  └─MXSUBNUM=─┬─255──┬────┘
              ├─511──┤
              ├─1023─┤
              ├─2047─┤
              ├─4095─┤
              ├─8191─┤
              ├─16383┤
              ├─32767┤
              └─65535┘

►─┬─NCPBUFSZ=512──────────┬─┬─NMVTLOG=NPDA──────────┬──────────────────────────────────►
  │                       │ │                       │
  └─NCPBUFSZ=─┬─512──┬────┘ └─NMVTLOG=─┬─ALWAYS─┬────┘
              ├─1024─┤                 ├─NEVER──┤
              └─2048─┘                 └─NPDA───┘

                   (6)
►─┬─NNSPREF=NONE──────────────────┬─┬─────────────┬─┬──────────────────────────────────►
  │                               │ │             │ │                      (7)         │
  └─NNSPREF=network_node_server───┘ └─NODELST=name─┘ └─NODETYPE=─┬─EN─┬─────────────────┘
                                                                 └─NN─┘

►─┬─NQNMODE=NAME──────────┬─┬──────────────────────────────────────────────────────────►
  │                       │ │
  └─NQNMODE=─┬─NAME───┬────┘ └─NSRTSIZE=(─netid,size─)──────────┘
             └─NQNAME─┘

►─┬─NUMTREES=100──────────────────────────────────┬─┬─OSIEVENT=PATTERNS──────┬──────────►
  │                                               │ │                        │
  │                                          (8)  │ └─OSIEVENT=─┬─ALL────┬───┘
  └─NUMTREES=number_of_routing_trees──────────────┘             ├─NONE───┤
                                                                 └─PATTERNS┘
```

START

```
►┬─OSIMGMT=NO──────────┬─┬─OSITOPO=(ILUCDRSC)──┬──────────────────────────►
 │                     │ │                     │
 └─OSIMGMT=─┬─YES─┬────┘ └─OSITOPO=─┬─ALLCDRSC─┬─┘
            └─NO──┘                 └─ILUCDRSC──┘

►┬─OSRTSIZE=43──────────────────────┬─┬─PDTRCBUF=2──────────────────┬──────►
 │                                  │ │                             │
 └─OSRTSIZE=number_of_queue_pointers─┘ └─PDTRCBUF=number_of_buffers───┘

►┬─PIUMAXDS=200──────────────┬─┬─PLUALMSG=NOSUPP──────┬──────────────────►
 │                           │ │                      │
 └─PIUMAXDS=calculation_factor─┘ └─PLUALMSG=─┬─SUPPRESS─┬─┘
                                             └─NOSUPP───┘

                                   (9)
►┬─PPOLOG=NO──────────┬─┬─PROMPT──────┬──────────────────────────────────►
 │                    │ │             │
 └─PPOLOG=─┬─NO──┬────┘ └─NOPROMPT─────┘
           └─YES─┘

►┬─PSRETRY=(0,0,0,0)──────────────────────────────────────────────┬──────►
 │                                                                │
 └─PSRETRY=(low_tp_int,med_tp_int,high_tp_int,network_tp_int)─────┘

                                                   (10)                (11)
►┬─PSSTRACE=NORB──────┬─┬─QDIOSTG=MAX──────┬─┬─RESUSAGE=100──────────┬──►
 │                    │ │                  │ │                       │
 └─PSSTRACE=─┬─NORB─┬───┘ └─QDIOSTG=─┬─MAX──┬─┘ └─RESUSAGE=usage_limit──┘
             ├─IRB──┤               ├─AVG──┤
             ├─SRB──┤               ├─MIN──┤
             └─BOTH─┘               └─NNN──┘

                   (12)
►┬─ROUTERES=128──────────────┬─┬─SACONNS=YES──────┬──────────────────────►
 │                           │ │                  │
 └─ROUTERES=resistance_value─┘ └─SACONNS=─┬─NO──┬─┘
                                          └─YES─┘

►┬─SAVERSCV=(NO,KEEP)──────────────┬─┬─SAWMAXDS=100──────────────────┬──►
 │                                 │ │                               │
 └─SAVERSCV=─┬─(,FREE)──────────┬────┘ └─SAWMAXDS=calculation_factor──┘
             ├─(,KEEP)──────────┤
             ├─NO───────────────┤
             ├─(NO,FREE)────────┤
             ├─(NO,KEEP)────────┤
             ├─YES──────────────┤
             ├─(YES,FREE)───────┤
             ├─(YES,KEEP)───────┤
             ├─SAWDATA──────────┤
             ├─(SAWDATA,FREE)───┤
             └─(SAWDATA,KEEP)───┘
```

START

```
►─┬─SAWMXQPK=0──────────────────────┬──────────────────────────────────────►
  │                                 │
  └─SAWMXQPK=calculation_factor─────┘

                                                                   (13)
  ┌─SDLCMDRS=(STATS,INOPS)──────────────────────┐   ┌─SECLVLCP=ADAPT──────┐
  ├─SDLCMDRS=YES────────────────────────────────┤   │                     │
►─┤                                             ├───┤                     ├──────►
  │                                             │   │                     │
  └─SDLCMDRS=──┬─YES──────────────────────────┬─┘   └─SECLVLCP=──┬─LEVEL1──┬─┘
               ├─NO───────────────────────────┤                  ├─LEVEL2──┤
               ├─STATS────────────────────────┤                  └─ADAPT───┘
               ├─NOSTATS──────────────────────┤
               ├─(,INOPS)─────────────────────┤
               ├─(,NOINOPS)───────────────────┤
               └─(──┬─STATS──┬─,INOPS──────┬──┬─)─┘
                    │        └─,NOINOPS────┘  │
                    └─NOSTATS──┬─,INOPS──────┬─┘
                               └─,NOINOPS────┘

  ┌─SIRFMSG=ALLSSCP──────┐   ┌─SLOWVAL=(0,0)──────────────┐
  ├─SIRFMSG=ALLSSCP──────┤   ├─SLOWVAL=──┬─warn_time──────┬─┤
►─┤                      ├───┤           └─(warn_time,end_time)─┘──────►
  │                      │   │
  └─SIRFMSG=──┬─ALLSSCP──┬─┘   └─────────────────────────────┘
              ├─OLUSSCP──┤
              └─NONE─────┘

  ┌─SLUALMSG=NOSUPP──────┐   ┌─SMEAUTH=DISCARD──────┐
  ├─SLUALMSG=NOSUPP──────┤   ├─SMEAUTH=DISCARD──────┤
►─┤                      ├───┤                      ├──────►
  │                      │   │                      │
  └─SLUALMSG=──┬─SUPPRESS─┬─┘   └─SMEAUTH=──┬─EXIT───┬─┘
               └─NOSUPP───┘                 ├─KEEP───┤
                                            └────────┘

                                                   (14)
  ┌─SNAPREQ=1000──────────────────┐   ┌─SNVC=3──────────────────┐
  ├─SNAPREQ=1000──────────────────┤   ├─SNVC=3──────────────────┤
►─┤                               ├───┤                         ├──────►
  │                               │   │                         │
  └─SNAPREQ=number_of_requests────┘   └─SNVC=subnet_visit_count─┘

                                                         (15)
  ┌─SONLIM=(60,30)──────────────────────┐   ┌─SORDER=APPN──────────┐
  ├─SONLIM=(60,30)──────────────────────┤   ├─SORDER=APPN──────────┤
►─┤                                     ├───┤                      ├──────►
  │                                     │   │                      │
  └─SONLIM=──┬─(percent_1,percent_2)────┬─┘   └─SORDER=──┬─ADJSSCP─┬─┘
             ├─(percent_1)──────────────┤                ├─APPN────┤
             └─(,percent_2)─────────────┘                ├─APPNFRST┤
                                                         └─SUBAREA─┘

                                                   (16)
  ┌─SRCHRED=OFF──────┐   ┌─SRCOUNT=10──────────────────────────┐
  ├─SRCHRED=OFF──────┤   ├─SRCOUNT=10──────────────────────────┤
►─┤                  ├───┤                                     ├──────►
  │                  │   │                                     │
  └─SRCHRED=──┬─OFF──┬─┘   └─SRCOUNT=number_of_search_requests─┘
              └─ON───┘

                (17)                                (18)
  ┌─SRTIMER=30──────────────────┐   ┌─SSCPDYN=YES──────┐
  ├─SRTIMER=30──────────────────┤   ├─SSCPDYN=YES──────┤
►─┤                             ├───┤                  ├──────►
  │                             │   │                  │
  └─SRTIMER=number_of_seconds───┘   └─SSCPDYN=──┬─NO───┬─┘
                                                └─YES──┘
```

```
┌─SSCPORD=PRIORITY──────┐   ┌─SSDTMOUT=30──────────────┐
│                       │   │                          │
└─SSCPORD=─┬─DEFINED─┬─┘   └─SSDTMOUT=number_of_seconds─┘
           └─PRIORITY─┘

                (19)
┌─SSEARCH=YES──────────┐   ┌─STRGR=ISTGENERIC──────────┐
│                      │   │                           │
└─SSEARCH=─┬─YES──────┬─┘   └─STRGR=─┬─ISTGENERIC─┬─┘
           ├─NO───────┤              ├─NONE───────┤
           ├─CACHE────┤              └─structure_name─┘
           └─APPNFRST─┘

┌─STRMNPS=ISTMNPS──────────┐   ┌─SUPP=NOSUP──────┐
│                          │   │                 │
└─STRMNPS=─┬─ISTMNPS──────┬─┘   └─SUPP=─┬─NOSUP─┬─┘
           ├─NONE─────────┤             ├─INFO──┤
           └─structure_name─┘            ├─WARN──┤
                                         ├─NORM──┤
                                         └─SER───┘

┌─SWNORDER=CPNAME──────┐
│                       │
└─SWNORDER=─┬─CPNAME─┬─┘   │                          (20)  │
            └─STATNID─┘     └─TCPNAME=tcp_job-name──────────┘

┌─NOTNSTAT──────────────────────────────────────────┐
│                                                   │
└─TNSTAT─┬─,NOCNSL─┬─┬─,TIME=60──────┬─┘
         └─,CNSL───┘ └─,TIME=minutes─┘

                    (21)
┌─NOTRACE,TYPE=BUF──────────────────────────────┐
│                                               │
└─TRACE,TYPE=BUF─┤ BUF Trace Operands (22) ├─┘

                   (21)
┌─NOTRACE,TYPE=IO──────────────────────────────┐
│                                              │
└─TRACE,TYPE=IO─┤ IO Trace Operands (22) ├─┘

                     (21)
┌─NOTRACE,TYPE=LINE──────────────────────────────┐
│                                                │
└─TRACE,TYPE=LINE─┤ LINE Trace Operands (22) ├─┘

                       (21)
┌─NOTRACE,TYPE=MODULE──────────────────────────────┐
│                                                  │
└─TRACE,TYPE=MODULE,─┤ MODULE Trace Operands (22) ├─┘
```

START

```
                    (21)
  ┌NOTRACE,TYPE=SIT──────────────────────────┐
►─┼──────────────────────────────────────────┼──────────────────────────►
                                        (22)
  └TRACE,TYPE=SIT─┤ SIT Trace Operands ├────┘

                    (21)
  ┌NOTRACE,TYPE=SMS──────────────────────┐
►─┼──────────────────────────────────────┼──────────────────────────────►
                                 (22)
  └TRACE,TYPE=SMS─,ID=VTAMBUF────────────┘

                    (21)
  ┌NOTRACE,TYPE=STATE────────────────────────┐
►─┼──────────────────────────────────────────┼──────────────────────────►
                                        (22)
  └TRACE,TYPE=STATE─┤ STATE Trace Operands ├─┘

                                        (22)
  ┌TRACE,TYPE=VTAM,─┤ VIT Operands ├──────┐
►─┼──────────────────────────────────────┼──────────────────────────────┤
                    (23)
  └NOTRACE,TYPE=VTAM──────────────────────┘
```

Notes:

1 The IQDCHPID option controls which IQD CHPID (and related subchannel devices) VTAM selects to dynamically build the iQDIO (IUTIQDIO) MPC group. The IUTIQDIO MPC group is used for TCP/IP dynamic XCF communications within this zSeries system. Although this option can be modified (and the modification will immediately be displayed) while the IUTIQDIO MPC group is currently active, any modifications will have the following effects:

- modified from ANY (or CHPID) to NONE — no effect on current usage but blocks subsequent activations
- modified from NONE to ANY (or CHPID) — no effect on current usage but allows subsequent activations
- modified from CHPID_X to CHPID_Y — no effect on current usage

Note: VTAM only uses the CHPID value when building the IUTIQDIO MPC group. To change CHPIDs for an active MPC group, the following must be done:

1. All TCP/IP iQDIO (HiperSocket) devices must be stopped.
2. Make any necessary HCD/IOCDS changes.
3. Verify that new subchannel devices are varied online.
4. Verify that the MPC group has deactivated (with no usage, it times out after approximately two minutes).
5. Modify IQDCHPID=CHPID (to new CHPID).
6. Restart the TCP/IP iQDIO device or devices.

Note: In order to use iQDIO communications, the processor must have the necessary hardware support. If the processor does not support iQDIO communications, then modifications to this start option will not be accepted and the IQDCHPID option will not be displayed (displayed as ***NA***).

2 This option only affects iQDIO devices that use a MFS of 64k. The smaller frame sizes will always use 126 SBALs.

3 LIST can be entered by a VTAM operator only. If LIST is coded in an ATCSTR*xx* file, it is considered to be an error and is ignored.

4 LISTBKUP can only be coded in a start option file. If you enter it on the START command or at an operator prompt, VTAM will ignore it.

5 MAXLOCAT is meaningful only if NODETYPE is specified.

6 NNSPREF can be specified only if NODETYPE=EN is specified during VTAM START processing.

7 NODETYPE enables APPN function. The combination of HOSTSA, NODETYPE, and SACONNS determines the configuration (subarea node, interchange node, migration data host, network node, or end node).

8 NUMTREES is meaningful only if the NODETYPE=NN start option is also used.

9 A VTAM operator cannot enter the PROMPT or NOPROMPT start option; it can be coded only in ATCSTR00. The value coded in ATCSTR00 is ignored if start options are entered on the START command or if VTAM finds an error in a start list. Upon finding an error in a start list, VTAM prompts the operator so that the operator can specify the option correctly.

10 QDIOSTG defaults to MAX for 64-bit (z/Architecture) machines and MIN for non 64-bit machines.

11 RESUSAGE is meaningful only if the NODETYPE=NN start option is also used.

12 ROUTERES is meaningful only if the NODETYPE=NN start option is also used.

13 The SECLVLCP start option is meaningful only if the NODETYPE and VERIFYCP start options are also used.

14 SNVC is meaningful only if the BN=YES start option is also used.

15 SORDER is meaningful only in an interchange node or a migration data host.

16 SRCOUNT is meaningful only if the SRCHRED=ON start option is also used.

17 SRTIMER is meaningful only if the SRCHRED=ON start option is also used.

18 The SSCPDYN start option applies only for interconnected networks (that is, GWSSCP=YES is used).

19 SSEARCH is meaningful only if the NODETYPE=NN start option is also used.

20 The TCPNAME start option must be specified in order to initiate an Enterprise Extender link.

21 Do not use NOTRACE when starting VTAM, except to override a TRACE start option coded in a predefined list.

22 Code TRACE and its qualifiers on one line. Code the TYPE qualifier immediately following TRACE.

23 NOTRACE,TYPE=VTAM is accepted but ignored. Tracing is started with the default trace table size and the default options.

START

```
                                                                  (1)
 ┌─TRANSLAT=(0,1,2,3,4,5,6,7)──────────┐  ┌─UPDDELAY=60──────────┐
├┤                                     ├──┤                      ├──────────────►
 └─TRANSLAT=──┬─value──────────────────┘  └─UPDDELAY=max_time────┘
              ├─()──────────────────────┤
              └─(──┬──────────────────┬─)─┘
                   ├─┬─OLUALIAS─┬─┤
                   │ └─0────────┘ │
                   ├─┬─DLUREAL──┬─┤
                   │ └─1────────┘ │
                   ├─┬─DLUSSCP──┬─┤
                   │ └─2────────┘ │
                   ├─┬─COSNAME──┬─┤
                   │ └─3────────┘ │
                   ├─┬─LOGMODES─┬─┤
                   │ └─4────────┘ │
                   ├─┬─LUANAME──┬─┤
                   │ └─5────────┘ │
                   ├─┬─USERVAR──┬─┤
                   │ └─6────────┘ │
                   └─┬─DLUALIAS─┬─┘
                     └─7────────┘
```

```
                                                                  (2)
►──┬──────────────────────┬──┬─VARYWLD=FULLWILD─────┬──┬─VERIFYCP=NONE──────────┬──►
   └─USSTAB=table_name────┘  └─VARYWLD=──┬─FULLWILD─┬─┘  └─VERIFYCP=──┬─NONE──────┬─┘
                                         ├─NOWILD───┤                  ├─OPTIONAL──┤
                                         ├─OPERONLY─┤                  └─REQUIRED──┘
                                         └─POAONLY──┘
```

```
                                                  (3)
►──┬─VFYRED=YES──────┬──┬─VFYREDTI=OFF──────────────┬──────────────────────────►
   └─VFYRED=──┬─YES─┬─┘  └─VFYREDTI=──┬─OFF──────────┬─┘
              └─NO──┘                 ├─0────────────┤
                                      └─reduction_timer─┘
```

```
                                          (4)                 (5)
►──┬─VOSDEACT=NO─────┬──┬─VRTG=NO─────────┬──┬─VRTGCPCP=YES────┬──────────────►
   └─VOSDEACT=──┬─YES─┬─┘  └─VRTG=──┬─YES─┬─┘  └─VRTGCPCP=──┬─YES─┬─┘
                └─NO──┘             └─NO──┘                  └─NO──┘
```

```
►──┬─VTAMEAS=32001──────────────────────┬──┬─XCFINIT=YES──────┬──────────────►
   └─VTAMEAS=number_of_concurrent_sessions─┘  └─XCFINIT=──┬─NO──┬─┘
                                                          └─YES─┘
```

```
►──┬─XNETALS=NO───────┬──┤
   └─XNETALS=──┬─NO──┬─┘
               └─YES─┘
```

Buffer Pool Values:

```
├──(──┬──────────┬──,──┬──────────┬──,──┬──────────┬──,──┬──┬──,──┬──────────┬──,──►
      └─baseno───┘     └─bufsize──┘     └─slowpt───┘     └─F─┘     └─xpanno───┘

►──┬──────────┬──,──┬──────────┬──)──────────────────────────────────────────────┤
   └─xpanpt───┘     └─xpanlim──┘
```

BUF Trace Operands:

```
├──,ID=node_name──┬──────────┬──┬──────────────────┬──┬──────────────────────────►
                  └─,EVERY───┘  ├─,AMOUNT=PARTIAL──┤  │
                                │                  │  │
                                └─,AMOUNT=──┬─FULL────┬┘
                                            └─PARTIAL─┘

►──┬──────────────────────┬──┬──────────────┬──┬──────────────────────────────────┤
   ├─,IDTYPE=RESOURCE─────┤  ├─,SAVE=NO────┤  │
   │                      │  │              │  │
   └─,IDTYPE=──┬─CP────────┬┘  └─,SAVE=──┬─NO────┬┘
               ├─SSCP──────┤             └─YES───┘
               └─RESOURCE──┘
```

IO Trace Operands:

```
├──,ID=node_name──┬──────────┬──┬──────────────────────┬──┬──────────────┬──┤
                  └─,EVERY───┘  ├─,IDTYPE=RESOURCE─────┤  ├─,SAVE=NO────┤
                                │                      │  │              │
                                └─,IDTYPE=──┬─CP────────┬┘  └─,SAVE=──┬─NO────┬┘
                                            ├─SSCP──────┤             └─YES───┘
                                            └─RESOURCE──┘
```

LINE Trace Operands:

```
├──,ID=line_name──┬──────────────────────┬──┬──────────────────────────────────┤
                  ├─,COUNT=ALL───────────┤  (6)
                  │                      │
                  └─,COUNT=──┬─ALL─────────┬┘
                             └─number_of_bytes─┘
```

MODULE Trace Operands:

```
├──,OPTION=──┬─ALL──────────────────┬──┬──────────────────────────────────────┤
             ├─option───────────────┤  │
             ├─(option)─────────────┤  │
             └─(──┬─COMMAND──────┬──)─┘
                  ├─CONNECTIONS──┤
                  ├─DEFINITION───┤
                  ├─INTERFACES───┤
                  ├─MANAGEMENT───┤
                  ├─NOEXIT───────┤
                  └─SESSION──────┘
```

Operands used with ID:

```
├──┬──────────────────────┬──┬──────────────────────────────────────────────────┤
   ├─,IDTYPE=RESOURCE─────┤  │
   │                      │  │
   └─,IDTYPE=──┬─CP────────┬┘
               ├─SSCP──────┤
               └─RESOURCE──┘
```

OPTION Operand:

```
├──,OPTION=──┬─ALL──────────┬──────────────────────────────────────────┤
            ├─option───────┤
            ├─(option)─────┤
            └─(──ADJCP──┬──)─┘
                ├─APPL──┤
                ├─CDRM──┤
                ├─CDRSC─┤
                ├─GROUP─┤
                ├─LINE──┤
                ├─LNKST─┤
                ├─LU────┤
                ├─NCP───┤
                └─PU────┘
```

SIT Trace Operands:

```
                      ┌─,COUNT=ALL──────────────┐ (6)
├──,ID=line_name──────┤                         ├──────────────────────────►
                      └─,COUNT=──┬─ALL──────────┬┘
                                 └─number_of_bytes┘

►──┬──────────────────────┬──────────────────────────────────────────────┤
   └─,TRACEPT=trace_point_id┘
```

STATE Trace Operands:

```
├──┬─,ID=node_name─┤ Operands used with ID ├──┬──────────────────────────┤
   └─┤ OPTION Operand ├──────────────────────┘
```

Notes:

1 UPDDELAY is meaningful only if the OSIMGMT=YES start option is also used.

2 The VERIFYCP start option is meaningful only if the NODETYPE start option is also used.

3 VFYREDTI is meaningful only if the NODETYPE=NN start option is also used.

4 VRTG is meaningful only if the NODETYPE and HOSTSA start options are also used.

5 VRTGCPCP is meaningful only if the NODETYPE and HOSTSA start options are also used.

6 COUNT applies only to the IBM 3720 and 3745 Communication Controllers.

VIT Operands:

```
   ┌─,MODE=INT,SIZE=999,DSPSIZE=0──────────────────────────┐
├──┤                                                        ├──────────────►
   └─,MODE=──┬─EXT──┬─,BFRNUM=2──────┬──────────────────────┤
             │      └─,BFRNUM=number─┘                      │
             └─INT──┬──────────────┬──┬──────────────────┬──┘
                    └─,SIZE=size───┘  └─,DSPSIZE=dspsize─┘
```

```
                                                  (1) (2)
  ,OPTION=(API,CIO,MSG,NRM,PIU,PSS,SMS,SSCP)
  ,SUBTRACE=ARBP,OPTION=  HPR
                          ALL
                                   (3)
                          (..,HPR,..)
  ,SUBTRACE=TREE,OPTION=  SSCP
                          ALL
                                   (4)
                          (..,SSCP,..)
  ,OPTION=  ALL
            NONE
            option
            (option)
                 ,
            (    API    )
                 APPC
                 CFS
                 CIA
                 CIO
                 CMIP
                 CSM
                 ESC
                 HPR
                 LCS
                 LOCK
                 MSG
                 NRM
                 PIU
                 PSS
                 SMS
                 SSCP
                 TCP
                 VCNS
                 XBUF
                 XCF
```

Notes:

1 The default options apply only to MODE=INT.

2 PSS and SMS can be turned off.

3 If multiple trace options are coded in parentheses, HPR must be one of the options coded inside the parentheses when SUBTRACE=ARBP is coded.

4 If multiple trace options are coded in parentheses, SSCP must be one of the options coded inside the parentheses when SUBTRACE=TREE is coded.

Abbreviations

Operand	Abbreviation
START	S
AMOUNT=FULL	AMT=F
AMOUNT=PARTIAL	AMT=P
DATEFORM	DATEFRM

Operand	Abbreviation
EVERY	E
MSGLEVEL	MSGLVL
OPTION	OPT
OPTION=COMMAND	OPT=CMD
OPTION=CONNECTION	OPT=CON
OPTION=DEFINITION	OPT=DEF
OPTION=INTERFACES	OPT=INT
OPTION=MANAGEMENT	OPT=MGMT
OPTION=SESSION	OPT=SES
PLUALMSG=NOSUPP	PLUALMSG=NOSUP
PLUALMSG=SUPPRESS	PLUALMSG=SUPP
SECLVLCP=LEVEL1	SECLVLCP=LVL1
SECLVLCP=LEVEL2	SECLVLCP=LVL2
SLUALMSG=NOSUPP	SLUALMSG=NOSUP
SLUALMSG=SUPPRESS	SLUALMSG=SUPP
TRANSLAT=COSNAME	TRANSLAT=3
TRANSLAT=DLUALIAS	TRANSLAT=7
TRANSLAT=DLUREAL	TRANSLAT=1
TRANSLAT=DLUSSCP	TRANSLAT=2
TRANSLAT=LOGMODES	TRANSLAT=4
TRANSLAT=LUANAME	TRANSLAT=5
TRANSLAT=OLUALIAS	TRANSLAT=0
TRANSLAT=USERVAR	TRANSLAT=6

When using an abbreviation in place of an operand, code the abbreviation exactly as shown in the table. For example, when coding the abbreviation for PLUALMSG=SUPPRESS, code only PLUALMSG=SUPP.

Purpose

VTAM is started with the START command.

You can enter the START command only at the master or a secondary system console.

Operands

procname

Procedure name for the command.

procname can be specified as either *startname.ident* or *startname*, where *startname* is the name of the JCL procedure used to start VTAM and *ident* is an optional identifier.

procname used for this command determines the *procname* used for all MODIFY commands as follows:

- If *procname* in the START command was specified as *startname.ident*, where *startname* is the VTAM start procedure and *ident* is the optional identifier, then either *startname.ident* or *ident* can be specified for *procname*.
- If *procname* in the START command was *startname*, then *startname* must be specified for *procname*.

Therefore, if you use NET as the optional identifier on this command, you can consistently use NET as *procname* for all VTAM commands.

options
VTAM start options supplied by the system programmer. The VTAM operator can enter one or more options. For a description of the start options, see the *z/OS Communications Server: SNA Resource Definition Reference*.

If more than one line is necessary for the start options, enter a comma and a closing parenthesis after the last option.

The values established by the start options go into effect when VTAM is started and remain in effect until VTAM is halted. Many of the options, however, can be modified with the MODIFY VTAMOPTS command while VTAM is running. You can use the DISPLAY VTAMOPTS command to display the values of the start options.

VARY ACQ command

Acquire an NCP, and optionally its subordinate resources, from another host:

```
►►──VARY NET,ACQ──,ID=ncp_name──┬──────────────────────┬──┬──────────┬──►
                                └─,OWNER=host_name─────┘  └─,PUSUB───┘

►──┬──────────────────────────────────────────────────────────────────►◄
   └─,ACT─┤ Operands used with ACT ├─┘
```

Acquire inactive NCP, and optionally its subordinate resources, without activating them:

```
►►──VARY NET,ACQ──,ID=ncp_name──┬──────────┬──────────────────────────►◄
                                └─,PUSUB───┘
```

Acquire inactive NCP, and optionally its subordinate resources, and activate them:

```
►►──VARY NET,ACQ──,ID=ncp_name──,ACT─┤ Operands used with ACT ├──┬──────────┬──►
                                                                 └─,PUSUB───┘

►──┬──────────────────────────────────────────────────────────────────►◄
   └─,LOADMOD=load_module_name─┘
```

Acquire nonswitched PU and its LUs:

```
►►──VARY NET,ACQ──,ID=pu_name──┬──────────────────────────────────────────►◄
                               └─,ACT─┤ Operands used with ACT ├─┘
```

Operands used with ACT:

```
├──┬──────────────────────────────────────────────────────────────┬──┬──────────────┬──┬──────────┬──┤
   └─,LOGON=appl_name──┬──────────────────────────────┬──┘  └─,SCOPE=──┬─ALL──┬─┘  └─,SCOPE=COMP──┘
                       └─,LOGMODE=logon_mode_name──┘                   ├─COMP─┤
                                                                       ├─ONLY─┤
                                                                       └─U────┘
```

Abbreviations

Operand	Abbreviation
VARY	V
LOADMOD	LM
PUSUB	P

Purpose

The VARY ACQ (acquire) command is used to acquire an NCP, or to acquire a peripheral PU (except for switched and local SNA PUs) attached by a nonswitched line. An NCP or a peripheral physical unit attached to an NCP can be acquired as

part of a backup and recovery procedure in a multiple-domain network. A physical unit attached to an NCP can also be acquired as part of a switched network backup procedure in either a single-domain or multiple-domain network.

The purpose of the VARY ACQ command is to acquire ownership of:

- NCP resources that are normally owned by another host. In that case, the NCP must have been previously activated.

  See the *z/OS Communications Server: SNA Resource Definition Reference* for additional information regarding the association of a resource with a particular host.
- All resources within an NCP, including the NCP itself. In that case, the NCP major node must be inactive and contacted through an active link station.
- An individual peripheral physical unit and its logical units.

Acquiring an NCP makes that NCP's resources known to VTAM until the NCP is released or deactivated. Likewise, acquiring a physical unit makes its logical units known until the physical unit is released.

Acquiring a physical PU in a logical hierarchy results in the acquisition of the logical lines in addition to any LUs. Also, the logical lines can be acquired only if the physical PU is acquired. This means that acquiring an NCP acquires the logical lines only if PUSUB is specified. Otherwise, a VARY ACQ command must be entered for the physical PU.

For a switched physical PU with a logical hierarchy, PUSUB must be specified when the NCP is acquired in order to acquire the associated logical lines and establish the hierarchy. It is not possible to acquire the switched physical PU individually. Therefore, the logical lines must be acquired when the physical line is acquired. (VTAM acquires physical lines when the NCP major node is acquired). If the physical line is acquired without PUSUB specified, then the physical/logical hierarchy will not be established. The physical units under the logical lines can be acquired individually, but their lines will not be considered subordinate to the switched physical PU.

If a subarea VTAM takes over an NCP owned by an APPN VTAM, it is possible that some resources will no longer be known. To avoid this situation, it is recommended that only APPN VTAMs take over resources from other APPN VTAMs.

The VARY ACQ command can also be entered for a physical unit when terminating a switched network backup procedure. The purpose of the VARY ACQ command is to make a nonswitched physical unit's logical units known to VTAM after a switched physical unit definition (representing the same physical device with a different physical unit name but with the same logical unit names) is deactivated.

Operands

ACT

If you use the ACT operand on the VARY ACQ command, other operands of the VARY ACT command are available. The operands you can use are:

- For resources subordinate to the NCP:
  - LOGON
  - LOGMODE
  - SCOPE
- For the NCP and resources subordinate to the NCP:
  - LOGON

  - LOGMODE
  - SCOPE
  - LOADMOD
- For PUs and LUs:
  - LOGON
  - LOGMODE
  - SCOPE

See the “VARY ACT command” on page 452 for a complete description of the operands from the VARY ACT command that apply.

ID=name
Specifies the name of the resource that is to be acquired. The resource must be either an NCP major node or a physical unit within an NCP major node.

If the resource being acquired is an inactive NCP, it is possible to specify any name for the ID operand, and then use the LOADMOD operand to identify the actual NCP major node. If PUNAME is specified in the BUILD definition statement, the NCP’s name must match that PUNAME value.

LOADMOD=load_module_name
Specifies the member name in VTAMLST of the NCP major node to be acquired. This operand applies to the acquisition of inactive NCPs only. If LOADMOD is not specified, the name specified for the ID operand is used as the member name.

See the LOADMOD operand on the VARY ACT command on page 470 for a complete description.

OWNER=host_name
Applies only when ID specifies an NCP that has previously been activated. VTAM acquires only the resources that have an owner name matching the one on this operand. You can specify only one owner name on this command. However, you can enter multiple acquire commands, each specifying a different owner name. If you do not specify OWNER on this command, all resources that have OWNER coded in their resource definition are acquired, regardless of which host is defined as the owner. However, resources that do not have OWNER coded are not acquired.

The *host_name* operand is defined in the NCP PCCU macro or coded on specific resources within an NCP, such as LINE or PU. This name specified on the OWNER operand cannot match the name of the VTAM host from which you are issuing the command (that is, VTAM cannot acquire resources that it already owns).

PUSUB
Applies only when ID specifies an NCP. PUSUB specifies that physical units and their logical units, subordinate to the acquired NCP are to be acquired in addition to the higher-level resources. If an NCP has previously been acquired without PUSUB, specifying PUSUB in a subsequent VARY ACQ command for the NCP can be used to acquire subordinate PUs and LUs.

If PUSUB is not specified, no PUs and associated LUs are acquired.

SCOPE
Specifies the scope of the command.

WARM and SCOPE cannot be specified on the same command. If both are specified, the command fails.

The only SCOPE value applicable to model major node, LUGROUP major node, path definition set, or adjacent SSCP tables is SCOPE=SYNTAX.

SCOPE has no effect for a TRL major node. If the SCOPE value is specified for this resource, VTAM issues message IST1275I to indicate that the operand was ignored and continues processing.

For configuration restart, the checkpoint data set is updated with information on these resources, unless SCOPE=SYNTAX is specified. No information is stored in the checkpoint data set if the SYNTAX option is used.

SCOPE=ALL
Specifies that the resource named in the ID operand and all of the appropriate subordinate resources are to be activated (regardless of their defined ISTATUS values).

SCOPE=COMP
Specifies one of the following actions:

- For the initial activation of a major node, activates all subordinate minor nodes according to the ISTATUS specification. (This is the same as SCOPE=U.)
- For a major node that is already active:
  - If UPDATE=ADD|ALL is specified on the same command, VTAM updates the current configuration to match the VTAMLST definition and activates minor nodes based on the ISTATUS value.
  - If UPDATE=IMPLICIT is specified or assumed by default, VTAM activates all subordinate minor nodes that were not previously active. (Logical units are activated according to their ISTATUS specification if the PU was not previously active. Otherwise, they are not activated.)
- For a minor node, the action depends on the node type, as follows:

Node	Action
Group, PU	Same as SCOPE=U
Line, LU, APPL, CDRSC, link station	Same as SCOPE=ONLY

LU activation varies according to the owning PU status when processing a SCOPE=COMP on an active major node. A previously inactive PU is activated and its subordinate LUs are activated according to their ISTATUS specification. The LUs of a previously active PU are ignored.

SCOPE=ONLY
Specifies that only the resource named in the ID operand is to be activated; none of its subordinate resources are to be activated (regardless of their defined ISTATUS values).

SCOPE=U
Specifies that the resource named in the ID operand, and all the appropriate subordinate resources defined with ISTATUS=ACTIVE, are to be activated.

VARY ACT command

Activate an NCP major node:

```
►►─VARY NET,ACT──,ID=ncp_name──┬──────────────────────────────────┬──►
                               └─,DUMPSTA=─┬──────────────────┬─┘
                                           └─link_station_name─┘

►─┬──────────────────────────────────────────────────────────────┬──►
  └─,LOGON=appl_name─┬──────────────────────────────┬──────────┘
                     └─,LOGMODE=logon_mode_name─────┘

  ┌─,LOAD=U,LOADFROM=HOST,DUMPLOAD=NO,SAVEMOD=NO─┐
►─┼──────────────────────────────────────────────┼──────────────────►
  └─,LOAD=─┬─NO──────────────────────────────────┬─┘
           └─┬─U───┬─┤ NCP Load Operands ├─┘
             └─YES─┘

►─┬──────────────────────────────────────────────────────────────►
  └─,NEWPATH=─┬──────────────────────────────┬──────────────────┘
              ├─dpu_name─────────────────────┤
              │      ┌─,──────────┐          │
              │      ▼            │   (1)    │
              └─(────dpu_name─────┘────)─────┘

                                                ┌─,SCOPE=COMP──────┐
►─┬──────────────────────────────────────────┬──┼──────────────────┼──►
  └─,RNAME=─┬──────────────────────────────┬─┘  └─,SCOPE=─┬─ALL──┬─┘
            ├─link_station_name────────────┤              ├─COMP─┤
            │                        (2)   │              ├─ONLY─┤
            └─(─link_station_name─)──────┘              └─U────┘

                                  ┌─,UPDATE=IMPLICIT──────┐
►─┬──────────────────────────────┬─┼───────────────────────┼──────►◄
  └─,U=channel_unit_address──────┘ └─,UPDATE=─┬─IMPLICIT─┬─┘
                                               ├─ADD────┤
                                               └─ALL────┘
```

Notes:

1 You can specify up to 3 dynamic path update member names on the NEWPATH operand.

2 You can specify up to 13 link station names on the RNAME operand.

LOADFROM Operand:

```
├─┬─,LOADFROM=HOST,DUMPLOAD=NO,SAVEMOD=NO──────────────────────────┬─────────┤
  │                                                                 │
  └─,LOADFROM=─┬─EXTERNAL─┬─,DUMPLOAD=NO──────┬─┬─,SAVEMOD=NO─┬─┬─┘
               │          └─,DUMPLOAD=─┬─NO─┬─┘ │             │ │
               │                       └─YES─┘   │             │ │
               │                                 │             │ │
               └─HOST─┬─,DUMPLOAD=NO,SAVEMOD=NO──┴─────────────┴─┴─┘
                      │
                      └─,DUMPLOAD=─┬─NO─┬─┬─,SAVEMOD=NO─┬─┬─┬
```

```
►►──VARY NET,ACT──,ID=line_name──┬──────────────────┬──────────────────────────────►◄
                                 └─,ANS=──┬─OFF─┬──┘
                                          └─ON──┘
```

Activate a type 2.1 PU (adjacent link station) or a nonswitched line under an NCP:

```
►►──VARY NET,ACT──,ID=──┬─pu_name──┬──┬──────────────────┬──────────────────────────►
                        └─line_name─┘  └─,CPCP=──┬─YES─┬──┘
                                                 └─NO──┘

                   (1)
►──┬──────────────────┬──┬──────────────────────────────────────────────────────────►
   └─,HPR=──┬─NO──┬──┘  └─,LOGON=appl_name──┬──────────────────────────┬──┘
            └─YES─┘                         └─,LOGMODE=logon_mode_name─┘

   ┌─,SCOPE=COMP──────┐                                   (2)
►──┼──────────────────┼──┬──────────────────────────────┬──────────────────────────►◄
   └─,SCOPE=──┬─ALL──┬──┘  └─,U=channel_unit_address─┘
              ├─COMP─┤
              ├─ONLY─┤
              └─U────┘
```

Notes:

1 The HPR operand is valid for HPR-capable resources only.

2 The U operand is valid for a local SNA PU only.

Activate a dynamic XCF local SNA PU:

```
►►──VARY NET,ACT──,ID=name──┬──────────────────┬──────────────────────────────────►◄
                            └─,IDTYPE=XCFCP────┘
```

Activate a control point (CDRSC minor node or application program minor node):

```
                            ┌─,IDTYPE=RESOURCE─────┐   ┌─,SCOPE=COMP──────┐
►►──VARY NET,ACT──,ID=name──┼──────────────────────┼───┼──────────────────┼──────────►◄
                            └─,IDTYPE=──┬─CP───────┬┘   └─,SCOPE=──┬─ALL──┬──┘
                                        └─RESOURCE─┘                ├─COMP─┤
                                                                    ├─ONLY─┤
                                                                    └─U────┘
```

Activate an SSCP (CDRM minor node):

```
                                        (1)  ┌─,IDTYPE=RESOURCE─────┐
►►──VARY NET,ACT──,ID=name──┬──────────────────┬──┼──────────────────────┼──────────►
                            └─,HPR=──┬─NO──┬──┘  └─,IDTYPE=──┬─SSCP───┬──┘
                                     └─YES─┘                  └─RESOURCE─┘
```

```
►─┬─,SCOPE=COMP──────────┬──┬──────────────────────────────────────────────────────────►◄
  │                      │  │                                (2)
  └─,SCOPE=─┬─ALL──┬──────┘  └─,VRTGCPCP=─┬─YES─┬──────────────────────────────────────
            ├─COMP─┤                      └─NO──┘
            ├─ONLY─┤
            └─U────┘
```

Notes:

1 HPR and VRTGCPCP are only valid if VRTG=YES is coded for the CDRM, and the CDRM is in an inactive state.

2 HPR and VRTGCPCP are only valid if VRTG=YES is coded for the CDRM, and the CDRM is in an inactive state.

Warm start a major node:

```
►►─VARY NET,ACT──,ID=major_node_name──,WARM──────────────────────────────────────────►◄
```

Activate a definition file (a major node with no subordinate resources):

```
►►─VARY NET,ACT──,ID=major_node_name─────────────────────────────────────────────────►◄
```

Check the syntax of a definition file (major node):

```
►►─VARY NET,ACT──,ID=major_node_name──,SCOPE=SYNTAX──────────────────────────────────►

►─┬──────────────────────────────────────────────────────────────────────────────────►◄
  └─,LOADMOD=load_module_name─┘
```

Dynamically reconfigure resources in a major node:

Note: For an NCP major node, follow the syntax diagram for “Activating an NCP major node” and specify the UPDATE operand.

```
                                          ┌─,SCOPE=COMP──────────┐
►►─VARY NET,ACT──,ID=major_node_name──┬──┤                      ├──────────────────────►
                                      └─,SCOPE=─┬─ALL──┬──────┘
                                                ├─COMP─┤
                                                ├─ONLY─┤
                                                └─U────┘

  ┌─,UPDATE=IMPLICIT──────┐
►─┤                       ├──────────────────────────────────────────────────────────►◄
  └─,UPDATE=─┬─IMPLICIT─┬──┘
             ├─ADD──────┤
             └─ALL──────┘
```

Dynamically reconfigure TRLEs in a TRL major node:

```
►►──VARY NET,ACT──,ID=trl_major_node_name──┬─,UPDATE=ADD──────────────────────┬──►◄
                                           │                                  │
                                           │                          (1)     │
                                           └─,UPDATE=──┬─IMPLICIT──────────┬──┘
                                                       ├─ADD───────────────┤
                                                       └─ALL───────────────┘
```

Notes:

1 Specifying UPDATE=IMPLICIT is the same as UPDATE=ADD.

Activate other resources:

```
►►──VARY NET,ACT──,ID=name──┬─,DWACT=NO──────────┬──────────────────────────────►
                            │                    │
                            └─,DWACT=──┬─NO──┬───┘
                                       └─YES─┘

►──┬──────────────────────────────────────────────────────────┬──┬─,SCOPE=COMP──────┬──►
   └─,LOGON=appl_name──┬──────────────────────────────────┬────┘  │                  │
                       └─,LOGMODE=logon_mode_name─────────┘       └─,SCOPE=──┬─ALL──┬──┘
                                                                              ├─COMP─┤
                                                                              ├─ONLY─┤
                                                                              └─U────┘

                                  (1)
►──┬──────────────────────────────┬──────────────────────────────────────────────►◄
   └─,U=channel_unit_address──────┘
```

Notes:

1 The U operand is valid for a local SNA PU or a channel link.

Abbreviations

Operand	Abbreviation
VARY	V
CPCP=NO	CPCP=N
CPCP=YES	CPCP=Y
DUMPLOAD=NO	DL=NO or DL=N
DUMPLOAD=YES	DL=YES or DL=Y
DUMPSTA	DST
DWACT=NO	DWACT=N
DWACT=YES	DWACT=Y
EXTERNAL	EXT
LOADFROM	LF
LOADFROM=EXTERNAL	EXT
LOADFROM=HOST	HOST
LOADMOD	LM
LOADSTA	LST
LOGMODE	LOG
SAVEMOD=NO	SM=NO or SM=N

Operand	Abbreviation
SAVEMOD=YES	SM=YES or SM=Y
SCOPE=ALL	ALL
SCOPE=COMP	COMP
SCOPE=ONLY	ONLY
SCOPE=SYNTAX	SYNTAX
VRTGCPCP=NO	VRTGCPPC=N
VRTGCPCP=YES	VRTGCPPC=Y

When using an abbreviation in place of an operand, code the abbreviation exactly as shown in the table. For example, when coding the abbreviation for LOADFROM=EXTERNAL, code only EXT.

Purpose

The VARY ACT (activate) command activates VTAM resources. Figure 6 on page 459 shows each resource type for which the command is valid, and which operands can be used for that resource type. A large dot means the operand can be specified for the resource, and an S means the operand can be specified to sift down to subordinate resources.

If any of the DUMPLOAD, SAVEMOD, or LOADFROM operands are coded on a VARY ACT command, the target of the command is assumed to be an IBM 3720 or 3745 Communication Controller with the hard disk option, and the following default values apply:

- LOADFROM=HOST
- SAVEMOD=NO
- DUMPLOAD=NO

If all three are omitted, the target of the command is assumed not to be an IBM 3720 or 3745 Communication Controller and these operands do not apply.

Note: The combination `LOADFROM=HOST,DUMPLOAD=YES,SAVEMOD=NO` is not valid.

Figure 7 on page 460 shows operands that are mutually exclusive for this command. To read the table, you:

- Look at the operand name on the right of the table.
- Read across the table to the left to find an X (to see the operands that cannot be coded with the operand named in the right-hand list). If the X appears in another operand's vertical column, the two operands are mutually exclusive.
- Match any number found at a row and column junction with the list of numbered notes that accompany the table to get information about unique restrictions or interactions.

The numbered fields in Figure 7 on page 460 identify unique requirements and restrictions as follows:

1. LOAD=YES or LOAD=U is required if DUMPLOAD=YES, SAVEMOD=YES, or LOADFROM is coded. The converse is not true.
2. This combination is not valid if SAVEMOD=NO is coded or assumed by default.
3. SAVEMOD=YES is required if DUMPLOAD=YES is coded, but only when LOADFROM=HOST is also specified. The converse is not true.

4. LOADMOD is required if it differs from the ID (that is, if NEWNAME on the BUILD statement differs from the PUNAME).
5. LOADFROM=HOST is required if SAVEMOD=YES is coded. The converse is not true.
6. This combination is not valid if LOADFROM=HOST is coded.

Note: Specification of WARM and SCOPE together causes the command to fail.

NO is the default for both SAVEMOD and DUMPLOAD (DUMPLD on the PCCU definition statement). If a value is specified on the PCCU definition statement, it overrides the default. If a value is specified on the VARY ACT command, it overrides both the PCCU definition statement value and the default value. This is shown in Table 7 on page 461.

ANS	CPCP	DUMPLOAD	DUMPSTA	DWACT	HPR	IDTYPE=CP	IDTYPE=RESOURCE	IDTYPE=SSCP	IDTYPE=XCFCP	LOAD	LOADFROM	LOADMOD	LOADSTA	LOGMODE	LOGON	NEWPATH	RNAME	SAVEMOD	SCOPE=SYNTAX	SCOPE=ALL/COMP/ONLY/U	UPDATE	VRTGCPCP	WARM	ID=
						●												●	●					**Adjacent CP major node**
						●												●	●					**Adjacent SSCP tables**
						●												●	●					**Application program major node**
					●	●												●						Application program minor node
						●												●	●					**APPN COS definition set**
						●												●	●				●	**CDRM major node**
				●		●	●											●				●		CDRM minor node
						●												●	●		●		●	**CDRSC major node**
					●	●							●	●				●						CDRSC minor node
						●							S	S				●	●				●	**Channel-attachment major node**
						●												●		●				Channel link
						●												●						Channel link station
						●							S	S				●	●				●	**Local non-SNA major node**
						●							●	●				●						Local non-SNA logical unit
						●							S	S				●	●		●		●	**Local SNA major node**
	●				●	●							S	S				●		●				Local SNA physical unit
						●							●	●				●						Local SNA logical unit
						●												●	●					**LUGROUP major node**
						●												●	●					**Model major node**
		●	●			●			●	●	●	●	S	S	●	●	●	●	●	●	●		●	**NCP major node**
	S				S	●							S	S				●						Nonswitched line
●						●												●						Switched line
						●												●						Link station
	●				●	●							S	S				●						Physical unit
						●							●	●				●						Logical unit
						●												●	●					**Network node server list**
						●												●	●					**Path definition set**
				●		●							S	S				●	●		●		●	**Switched major node**
	●			●	●	●							S	S				●						Switched physical unit
				●		●												●						Switched link station
						●							●	●				●						Switched logical unit
						●												●	●					**TGP definition set**
																					●			**TRL major node**
						●												●	●				●	**XCA major node**
						●												●						Nonswitched line
						●												●						Link station
●						●												●						Switched line
																								XCF local SNA major node
																								XCF local SNA physical unit
								●																CP name of XCF local SNA physical unit

Figure 6. Valid resource types for VARY ACT

	ANS = ON	ANS = OFF	CPCP = YES	CPCP = NO	DUMPLOAD = YES	DUMPLOAD = NO	DWACT = YES	DWACT = NO	HPR = YES	HPR = NO	IDTYPE = CP	IDTYPE = SSCP	IDTYPE = RESOURCE	IDTYPE = XCFCP	LOAD = YES	LOAD = NO	LOAD = U	LOADFROM = HOST	LOADFROM = EXTERNAL	LOADMOD	LOGMODE	LOGON	SAVEMOD = YES	SAVEMOD = NO	SCOPE = ALL	SCOPE = COMP	SCOPE = ONLY	SCOPE = SYNTAX	SCOPE = U	UPDATE = ADD	UPDATE = ALL	UPDATE = IMPLICIT	VRTGCPCP = YES	VRTGCPCP = NO	WARM
ANS = OFF	X																																		
CPCP = YES																																			
CPCP = NO			X																																
DUMPLOAD = YES																																			
DUMPLOAD = NO					X																														
DWACT = YES																																			
DWACT = NO							X																												
HPR = YES																																			
HPR = NO									X																										
IDTYPE = CP																																			
IDTYPE = SSCP											X																								
IDTYPE = RESOURCE											X	X																							
IDTYPE = XCFCP										X	X	X	X																						
LOAD = YES							1					X	X	X																					
LOAD = NO							X								X																				
LOAD = U							1								X	X																			
LOADFROM = HOST							2								1	X	1																		
LOADFROM = EXTERNAL															1	X	1	X																	
LOADMOD																																			
LOGMODE														X																					
LOGON																																			
SAVEMOD = YES							3								1	X	1	5	X	4															
SAVEMOD = NO							6										X						X												
SCOPE = ALL																																			
SCOPE = COMP																									X										
SCOPE = ONLY																									X	X									
SCOPE = SYNTAX																									X	X	X								
SCOPE = U																									X	X	X	X							
UPDATE = ADD															X						X	X						X							
UPDATE = ALL															X						X	X						X		X					
UPDATE = IMPLICIT															X						X	X						X		X	X				
VRTGCPCP = YES															X																				
VRTGCPCP = NO															X																			X	
WARM																									X	X	X	X	X	X	X	X			

Figure 7. Mutually exclusive (X) operands for VARY ACT

Table 8 on page 462 and Table 9 on page 463 show the relationships between the SAVEMOD and DUMPLOAD operands as they relate to the LOADFROM=HOST (Table 8 on page 462) and LOADFROM=EXT (Table 9 on page 463) operands. SAVEMOD and DUMPLOAD (DUMPLD on PCCU) can be specified on either the PCCU definition statement or the VARY ACT command. See the *z/OS Communications Server: SNA Resource Definition Reference* for information about the PCCU definition statement.

In Table 8 on page 462, Table 9 on page 463, and Table 10 on page 463, the following is assumed:

- ***DUMPLOAD*** refers to both DUMPLOAD on the VARY ACT command and DUMPLD on the PCCU. The value to be used is determined by Table 7 on page 461.
- ***SAVEMOD*** refers to both SAVEMOD on the VARY ACT command and SAVEMOD on the PCCU. The value to be used is determined by Table 7 on page 461.

- ***Hard disk*** refers to the hard disk on the IBM 3720 or 3745 Communication Controller.

Table 10 on page 463 shows how AUTODMP and AUTOIPL relate to the IBM 3720 or 3745 hard disk.

- ***AUTODMP:*** If the NCP abends, an attempt to put the NCP dump on the hard disk is made if the dump/load switch is set. If there is an NCP dump on the hard disk for this CCU, a request is made to dump the NCP to the host. The value of the AUTODMP operand on the PCCU definition statement determines whether this request is automatically implemented.
- ***AUTOIPL:*** If the NCP abends, and there is an NCP dump on the hard disk for this CCU, or if the automatic dump/load switch is set to NO, the value of the AUTOIPL operand on the PCCU definition statement determines how the NCP is reloaded.

If DUMPLOAD=YES (as determined in Table 7), the communication controller attempts to dump and load the NCP. If the dump and load are not successful, the action to be taken depends on the values of AUTODMP and AUTOIPL as shown in Table 10 on page 463.

Note: For the DUMPSTA and LOADSTA operands, the operator must determine from the person who defined the VTAM system, usually the system programmer, whether a name has been given in the system definition statements for the link station. If a name has been defined already, then that name should be used for the DUMPSTA and LOADSTA operands. Otherwise, the operator can use the name automatically defined by VTAM.

Table 7. Precedence of values when SAVEMOD and DUMPLOAD are specified. These rules of precedence apply in both the VARY ACT command and PCCU definition statement.

	PCCU		
VARY ACT	**YES**	**NO**	**Not specified**[1]
YES	YES	YES	Yes
NO	NO	NO	NO
Not Specified	YES	NO	NO

Note:

1. NO is the default for both SAVEMOD and DUMPLOAD (DUMPLD on PCCU).

VARY ACT

Table 8. Results when LOADFROM=HOST or LOADFROM is not specified

	SAVEMOD	
DUMP- LOAD	**YES**	**NO or not specified**
YES	The NCP is loaded from the host into the CCU and saved on the hard disk. If the NCP abends: • If there is no NCP dump on the hard disk for this CCU, the NCP dumps automatically to the hard disk and the CCU is reloaded automatically from the hard disk. • If there is an NCP dump on the hard disk for this CCU, a request is made to dump the NCP to the host. – If AUTOIPL=YES is coded on the PCCU definition statement, VTAM automatically reloads the NCP into the CCU by transferring the load module from the host. – If AUTOIPL=NO is coded on the PCCU definition statement, the operator must request to reload the NCP into the CCU. This is done in one of the following ways: - To transfer the load module from the host, enter the VARY ACT, LOADFROM=HOST command (see Table 10 on page 463). - To transfer the load module from the hard disk, enter the VARY ACT, LOADFROM=EXT command (see Table 10 on page 463).	This is an incorrect specification or ignored if on the PCCU definition statement. The dump/load switches cannot be manipulated without saving the load module onto the hard disk unless the load module already exists on the hard disk and is being reloaded with LOADFROM=EXT.
NO or Not Specified	The NCP is loaded from the host into the CCU and saved on the hard disk. The dump and reload of NCP into the CCU must be transferred to or from the host. • If AUTOIPL=YES is coded on the PCCU definition statement, VTAM automatically reloads the NCP into the CCU by transferring the load module from the host. • If AUTOIPL=NO is coded on the PCCU definition statement, the operator must request to reload the NCP into the CCU. – To transfer the load module from the host, enter the VARY ACT, LOADFROM=HOST command (see Table 10 on page 463). – To transfer the load module from the hard disk, enter the VARY ACT, LOADFROM=EXT command (see Table 10 on page 463).	The NCP is loaded only from the host into the CCU. The dump and reload of NCP into the CCU must be transferred to or from the host. • If AUTOIPL=YES is coded on the PCCU definition statement, VTAM automatically reloads the NCP into the CCU by transferring the load module from the host. • If AUTOIPL=NO is coded on the PCCU definition statement, the operator must request to reload the NCP into the CCU. – To transfer the load module from the host, enter the VARY ACT, LOADFROM=HOST command (see Table 10 on page 463).

Table 9. Results when LOADFROM=EXT is specified

DUMP- LOAD	SAVEMOD	
	YES	NO or not specified
YES	This is an incorrect specification or ignored if on the PCCU definition statement. It cannot be specified to load the CCU from the hard disk (LOADFROM=EXT) and to save the load module on the hard disk at the same time (SAVEMOD=YES).	The NCP is loaded into the CCU from the hard disk. If the NCP abends: • If there is no NCP dump on the hard disk for this CCU, the NCP is automatically dumped to the hard disk and the CCU is automatically reloaded from the hard disk. • If there is an NCP dump on the hard disk for this CCU, a request is made to dump the NCP to the host. – If AUTOIPL=YES is coded on the PCCU definition statement, VTAM automatically reloads the NCP into the CCU by transferring the load module from the host. – If AUTOIPL=NO is coded on the PCCU definition statement, the operator must request to reload the NCP into the CCU. This is done in one of the following ways: - To transfer the load module from the host, enter the VARY ACT, LOADFROM=HOST command (see Table 10). - To transfer the load module from the hard disk, enter the VARY ACT, LOADFROM=EXT command (see Table 10).
NO or Not Specified	This is an incorrect specification or ignored if on the PCCU definition statement. It cannot be specified to load the CCU from the hard disk (LOADFROM=EXT) and to save the load module on the hard disk at the same time (SAVEMOD=YES).	The NCP is loaded into the CCU from the hard disk. The dump and reload of NCP into the CCU must be transferred to or from the host. • If AUTOIPL=YES is coded on the PCCU definition statement, VTAM automatically reloads the NCP into the CCU by transferring the load module from the host. • If AUTOIPL=NO is coded on the PCCU definition statement, the operator must request to reload the NCP into the CCU. – To transfer the load module from the host, enter the VARY ACT, LOADFROM=HOST command (see Table 10).

Table 10. Actions to be taken for unsuccessful DUMP and LOAD

DUMP- LOAD	AUTODMP on PCCU		AUTOIPL on PCCU	
	YES	NO	YES	NO
YES	NCP dump is automatically transferred to the host.	The operator must decide whether to dump the NCP. The operator indicates whether to dump the NCP in response to the prompt shown.	The NCP is automatically loaded into the CCU from the host even though the NCP load module resides on the hard disk.	The operator must reload the NCP by issuing either the VARY ACT, LOADFROM=EXT command to reload the NCP from the hard disk or the VARY ACT, LOADFROM=HOST command to reload the NCP from the host.
NO or Not Specified	NCP dump is automatically transferred to the host.	The operator must decide whether to dump the NCP. The operator indicates whether to dump the NCP in response to the prompt shown.	The NCP is automatically loaded into the CCU from the host.	The operator must reload the NCP by issuing the VARY ACT, LOADFROM=HOST command to reload the NCP from the host.

Operands

ANS

Specifies whether VTAM should put a switched SDLC line in answer mode. The VARY ACT command with the ANS operand has the same effect as the VARY ANS command with the ACT operand. See the "VARY ANS command" on page 481 for more information on the VARY ANS command.

ANS=ON

Specifies that VTAM should put the switched SDLC line in answer mode. When the line is in answer mode (and active), the NCP answers incoming calls from dial-in devices and notifies VTAM of the calls so that sessions can be established.

ANS=OFF

Specifies that VTAM should not put a switched SDLC line in answer mode. If there is an existing session for the line, ANS=OFF does not break the session, but no further calls are accepted after the session ends.

CPCP

Applies for adjacent link stations and indicates whether the connection is to support CP-CP sessions. This operand allows the value of the CPCP operand on the PU definition statement to be overridden. You can also specify CPCP for an NCP nonswitched line to indicate whether PUs under the line are to support CP-CP sessions. If CPCP is not specified on the VARY ACT command, CP-CP session capability on the connection is determined from the PU definition statement or from the CPCP start option. If CPCP is specified on the VARY ACT command, the value affects only a single activation instance. Subsequent activations use the predefined values for that PU.

The resource must be in an inactive or connectable state; otherwise the command fails and an error message is issued. CP-CP session capability is determined during XID exchange and cannot be changed after a connection is established.

CPCP=YES

Indicates that the connection is to support CP-CP sessions.

CPCP=NO

Indicates that the connection is not to support CP-CP sessions.

DUMPLOAD

Applies only if LOAD=YES is specified or if LOAD=U is specified or assumed by default. Specifies whether the automatic dump/load switch in the IBM 3720 or 3745 Communication Controller should be set to on or off. The switch controls automatic dumping and reloading of an NCP to or from the hard disk in the event of an NCP abend.

See Table 8 on page 462 and Table 9 on page 463 for additional information about DUMPLOAD specifications.

Existing automatic IPL settings for a load module are retained by the IBM 3720 or 3745 Communication Controller (that is, DUMPLOAD does not default) if the following are true:

- DUMPLD is not specified in the PCCU definition statement
- DUMPLOAD, SAVEMOD, and LOADFROM are not specified in the VARY ACT command
- A copy of the load module is already stored on the IBM 3720 or 3745 Communication Controller hard disk

DUMPLOAD=YES
Turns the automatic dump/load switch on. When the NCP abends, the switch is tested. If the switch is on, and if there is no NCP dump on the hard disk for this CCU, a dump of the NCP is stored on the IBM 3720 or 3745 Communication Controller hard disk. If the dump slot is full and AUTODMP=YES on the PCCU definition statement, the dump is transferred to the host. Otherwise, the network operator is prompted as specified in Table 10 on page 463.

After a dump has been stored, the controller is reloaded with the active NCP load module from the IBM 3720 or 3745 Communication Controller. The automatic load takes place only if the automatic dump has successfully occurred.

DUMPLOAD=NO
Turns the automatic dump/load switch off in the communication controller. The controller is not automatically dumped and reloaded from the hard disk.

DUMPSTA=link_station_name
Applies only to the first activation of an NCP. (That is, DUMPSTA does not apply if the NCP is already active or is in the process of being activated.)

DUMPSTA specifies the name of a link station in an adjacent subarea node through which any later static dump operations for this NCP are to be carried out. The VTAM-generated link station name (a 3-digit or 4-digit hexadecimal device number followed by -S) can be specified. The link station can be either a channel link station or an SDLC link station in an NCP major node. The link station cannot be an SDLC link station in a channel-attachment major node. The link station identified for DUMPSTA should also be identified in the device number (U) or RNAME specifications for this NCP, either in the NCP definition or in this VARY ACT command.

Note: DUMPSTA does not support switched, X.25, or token-ring link stations.

The DUMPSTA operand, if specified, overrides any NCP definition value of DUMPSTA. If DUMPSTA is not specified in either the NCP definition or this command, VTAM selects (at the time of each dump operation) an available adjacent link station, giving preference to a channel link station. Similarly, if DUMPSTA is specified without a value (that is, if DUMPSTA= is specified), DUMPSTA assumes a null value and VTAM selects an available adjacent link station as previously described.

Note: All references to NCP definition should be “NCP PCCU definition”.

DWACT
Specifies whether to dial the PUs that are activated as a result of the activation of the switched major node or switched PU named on the ID operand.

Activation of PUs subordinate to the switched major node is determined by the ISTATUS value coded on the PU definition statement and the SCOPE value on the VARY ACT command. Specifying DWACT=YES on the major node activation prevents you from having to issue a VARY DIAL command for each PU individually after the PU is activated. For more information on the use of DWACT with a switched physical PU and associated logical hierarchy, see the *z/OS Communications Server: SNA Network Implementation Guide*.

DWACT=YES
Dials the PUs that are activated as a result of the switched major node or switched PU activation.

Note: For switched PU activation, the PU is dialed on initial activation only; DWACT=YES has no affect on VARY INACT,R command processing. This command causes the PU to be inactivated and then activated, but no dial operation is performed.

DWACT=NO
Does not dial the PUs that are activated as a result of the switched major node or switched PU activation. Specifying DWACT=NO on the VARY ACT command does not override DWACT=YES specified on the PU definition statement.

HPR
Specifies HPR capability at the link level. The use of the HPR operand on this command overrides what is coded for HPR on the CDRM, GROUP, LINE, or PU definition statements. HPR is valid on activation of a CDRM, GROUP, LINE, or PU in an HPR-capable node. For information on HPR capability for various node and connection types, see the *z/OS Communications Server: SNA Network Implementation Guide*.

Note: For a CDRM, this operand is valid only if VRTG=YES is specified for the CDRM, and the CDRM is in an inactive state; otherwise, the command fails and an error message is issued.

HPR=YES
Specifies that the GROUP, LINE, PU, or VR-based TG to the CDRM being activated is HPR-capable.

HPR=NO
Specifies that the GROUP, LINE, PU, or VR-based TG to the CDRM being activated is not HPR-capable.

ID=name
Specifies the name of the resource to be activated. The name can be a network-qualified name. It cannot be a USERVAR or LUALIAS name. If the name specified on the ID operand is network-qualified, this name is considered to be the real name of the resource. The name can be an ACB name or an alias name, as long as it is not network-qualified.

Following is an example of an APPL major node definition to show how application names can be network-qualified:

```
x      APPL ACBNAME=y,...
```

In the above example, *x* (the application name) can always be network-qualified. *y* (the ACB name) can be network-qualified only if *y* is the same as *x*.

To activate the dynamic local SNA major node for XCF connections, specify ID=ISTLSXCF.

To reactivate a dynamic XCF local SNA PU representing the connection to another VTAM, you can specify one of the following:

- The name of the PU
- The CP name of the other VTAM with IDTYPE=XCFCP

For a CDRM, you can specify a network-qualified name, but this does not remove the restriction that the non-network-qualified CDRM name must be unique across networks.

If the resource is a TRL major node, specify the VTAMLST member name as the ID value. The command builds the TRL major node using the set of TRLE definition statements that are defined in the TRL major node. Subsequent messages about the TRL major node display ISTTRL as the name of the table. ISTTRL is the name of the VTAM internal table.

If the resource is an NCP:

- If PUNAME is specified in the BUILD definition statement, the ID operand must specify that PUNAME value.
- If PUNAME is not specified in the BUILD definition statement, the ID operand can specify any name desired (that is not not already known to this VTAM), and use the LOADMOD operand to identify the actual NCP major node. After the NCP is active, the name specified on the ID operand is the name used to identify the NCP (not the load module name specified on LOADMOD).

If the resource is a switched major node containing PUs supported by a dependent LU requester (DLUR), the CPSVRMGR session is not activated until a VARY DIAL command is issued for the physical unit. See the “VARY DIAL command” on page 484 for more information.

If the resource is a model application program, the state of the model application program becomes connectable (CONCT). This means that the model application program definition is available to build dynamic application programs.

You cannot activate dynamic application programs with the VARY ACT command. Dynamic application programs are activated only by opening their ACBs. For a dynamic application program to successfully open its ACB, a model definition must exist to build the dynamic application program, and that model definition must be connectable.

The following restrictions apply to VARY ACT depending on whether VTAM has been defined to support APPN function:

- If VTAM has been defined as an APPN-only node, you cannot activate the following resources:
  - NCP
  - CDRM
  - Path definition set
  - Adjacent SSCP
- If VTAM has been defined as a subarea-only node, you cannot activate the following resources:
  - Adjacent CP
  - Transmission group profile
  - APPN Class of Service table
- If VTAM has been defined as a migration data host, you cannot activate an NCP.
- If VTAM has been defined as a network node, you cannot activate a network node server list. (The list can only be activated at an end node.)

If the named resource has subordinate resources (for example, logical units subordinate to a physical unit), those subordinate resources can also be activated using the SCOPE or WARM operands.

Independent LUs are not subordinate to any PU. Therefore, the sift-down to subordinate LUs does not affect independent LUs unless the ID value is a CDRSC major node.

You can individually activate multiple adjacent SSCP table definitions. Each new set of definitions is added to the internal table used by VTAM. New definitions for destinations already in the internal table replace the current adjacent SSCP list for those destinations, but you cannot deactivate existing adjacent SSCP lists. If a new table replaces an existing one, VTAM issues a message informing the operator.

To activate an APPN-to-subarea or subarea-to-APPN Class of Service mapping table, issue the VARY ACT command at the APPN-capable host that will use the table.

To activate a subarea mapping table, issue the VARY ACT command at the ICN host that will use the table.

To activate a network node server list, issue the VARY ACT command at the end node which will use the list. Note that this command activates the list, but the list is not used until the existing CP-CP session is terminated. If the end node has no CP-CP session when you issue this command, and an active link is available to one of the servers in the list, this command will activate a CP-CP session as well as activating the server list. If you choose not to activate your own network node server list at end node initialization, a network node server list consisting of a single nameless NETSRVR definition statement is automatically activated by default.

You can dynamically replace a network node server list by creating a new list, issuing VARY ACT to activate the new list, and issuing VARY TERM to terminate the existing CP-CP session. VTAM will automatically drive a new CP-CP session using the new list. A network node server list cannot be deactivated.

To activate a SAW sense filter, issue the VARY ACT command at the host node that will use the table.

IDTYPE

Specifies the type of resource that the ID operand names. If several types of resources share the same name, IDTYPE can be used to identify which resource the command should act on.

IDTYPE=CP

Specifies that the name on the ID operand is a CP. If an APPN connection exists, VTAM attempts to activate a CP-CP session between the host CP and the resource named on the ID operand.

Note: You cannot activate a CP-CP session to an adjacent CP running VTAM V4R1 if the link is already active.

IDTYPE=RESOURCE

Activates the resource specified on the ID operand.

If the resource VTAM finds is a CP and if an APPN connection exists, VTAM attempts to activate a CP-CP session between the host CP and the resource named on the ID operand.

If the resource VTAM finds is a host CP or an adjacent CP, VTAM searches for a CDRM with the name specified on the ID operand and activates the CDRM, as well.

If a CP and an SSCP are found with the specified name, VTAM activates both the CP and the SSCP simultaneously.

IDTYPE=SSCP
Specifies that the name on the ID operand is an SSCP. VTAM activates the CDRM by the name specified.

IDTYPE=XCFCP
Activates the dynamic XCF local SNA PU representing the connection to another VTAM, when the ID operand specifies the CP name of the other VTAM.

LOAD
Applies only to the first activation of an NCP. (That is, LOAD does not apply if the NCP is already active or is in the process of being activated.)

LOAD specifies whether the communication controller associated with the specified NCP is to be reloaded with the appropriate NCP load module.

A communication controller is associated with an NCP for the purposes of this command if any of the following conditions are met:

- It is already known to contain the named NCP.
- It is attached through one or more of the adjacent link stations identified by the NCP's device number (U) or RNAME specifications, or both.
- It is attached through the adjacent link station identified by the LOADSTA specification for the NCP.

LOAD=YES
Unconditionally loads the communication controller associated with the specified NCP, regardless of the current state or contents of the communication controller.

Note: If the NCP is being loaded by another host when this command is issued, the command fails.

LOAD=NO
Prevents the communication controller associated with the specified NCP from being loaded during the processing of this VARY ACT command, regardless of the current state or contents of the communication controller. (The communication controller is still subject to possible reload operations during error recovery procedures subsequent to the activation of the NCP.) If the communication controller does not contain the expected NCP load module, the VARY ACT command fails.

LOAD=U
Lets VTAM determine whether the communication controller associated with the specified NCP should be loaded during the processing of this VARY ACT command (based on the current contents of the communication controller and on the NCP definition statements), as it was before the availability of the LOAD operand.

For additional information about what VTAM does when LOAD=U is specified, see the *z/OS Communications Server: SNA Network Implementation Guide*.

Note: If this command is issued while another host is loading the NCP, you are notified, and VTAM waits until the load is complete from the other host. VTAM then loads the NCP as appropriate.

LOADFROM

Applies only if LOAD=YES or LOAD=U. It specifies whether VTAM loads the NCP module from the host or from the communication controller hard disk. See the *z/OS Communications Server: SNA Resource Definition Reference* for a complete description of the LOADFROM operand on the PCCU definition statement.

LOADFROM=HOST is not supported for loading an NCP attached by a token-ring, X.25 PVC or SVC, or X.21 switched connection. Specify LOADFROM=EXTERNAL for those line types.

See Table 8 on page 462 and Table 9 on page 463 for additional information about LOADFROM specifications.

LOADFROM=HOST

Loads the NCP from the host, using the SSP as the interface to the NCP load library.

Note: The combination `LOADFROM=HOST,DUMPLOAD=YES,SAVEMOD=NO` is not valid.

LOADFROM=EXTERNAL

Loads the NCP from the IBM 3720 or 3745 Communication Controller hard disk.

LOADMOD=load_module_name

Specifies the name of the load module to load. The load module name is the member name specified in the NCP LOADLIB. This name must match the major node name (the member name in VTAMLST).

The LOADMOD operand must be specified if the name of the PU specified in the BUILD definition statement is not the same as the load module name. Failure to code LOADMOD when the PU name and load module name differ prevents VTAM from locating the specific definition program you now want to activate. If NEWNAME is specified, the LOADMOD value must match the NEWNAME value specified in the BUILD definition statement.

LOADSTA=link_station_name

Applies only to the first activation of an NCP. (That is, LOADSTA does not apply if the NCP is already active or is in the process of being activated.)

LOADSTA specifies the name of a link station in an adjacent subarea node through which any load operations for this NCP are to be carried out. The VTAM-generated link station name (a 3-digit or 4-digit hexadecimal device number followed by -S) can be specified. The link station can be either a channel link station or an SDLC link station in an NCP major node. The link station identified for LOADSTA should also be identified in the device number (U) or RNAME specifications for this NCP, either in the NCP definition or in this VARY ACT command.

The link station cannot be an SDLC link station in a channel-attachment major node.

The LOADSTA operand, if specified, overrides any NCP definition value of LOADSTA. If LOADSTA is not specified in either the NCP definition or on this command, VTAM selects (at the time of each reload operation) an available adjacent link station, giving preference to a channel link station. Similarly, if

LOADSTA is specified without a value (that is, if LOADSTA= is specified), LOADSTA assumes a null value and VTAM selects an available adjacent link station from the NCP link station queue in the following order:

1. Channel
2. Active leased
3. Active dial-out switched
4. Active dial-in switched
5. Pending active leased
6. Pending active dial-out switched
7. Pending active dial-in switched
8. Dummy (undefined)

If the NCP resides in a communication controller that is attached to VTAM by a serial optical channel (SOC), and you are reloading the NCP with a new load module, the LOADSTA operand is required and the link station name that you specify must be defined as an IPL port in the Telecommunication Service Processor (TSP). This is because ESCON support allows up to sixteen SOC link stations to be defined as parallel TGs, and usually only one or two of these link stations are defined as IPL ports. The NCP load will fail if the link station is not defined as an IPL port in the TSP. (Because a maximum of eight VRs can be active at a time, only eight of the sixteen parallel TGs can be attached between the host and the NCP at a time.)

LOGMODE=logon_mode_name

Specifies the logon mode name to be used for any logon initiated for a logical unit as a result of this command (see the description of the LOGON operand). This logon mode name also becomes the logon mode name for all future automatic logons performed by VTAM for logical units within the scope of this command and for their controlling primary LUs (if any).

LOGMODE is valid only if LOGON is specified. If LOGMODE is specified without LOGON, the command fails and an error message is issued.

If LOGMODE is not specified, the LOGMODE value specified in any previous command applicable to a logical unit also within the scope of this VARY ACT command is used. If no LOGMODE value was ever specified for a given logical unit within the scope of this command, the logical unit's default value is used.

LOGON=appl_name

Specifies the name of an application program (primary LU) to which any secondary LUs within the scope of this command are to be logged on. The application name can be network-qualified. If it is, the network identifier is considered to be real, but the resource name is considered to be generic (that is, the resource name can be either the real application name or a USERVAR name).

If the application name is an ACB name, and the ACB name matches the name on the APPL definition statement, then you can use a network-qualified ACB name.

If a USERVAR is found, VTAM resolves its name to the name of the VTAM application with which it is currently associated. If a USERVAR with this name is not found, VTAM searches for an application program with this name.

If the primary LU is an application program in this domain, the name must be that of an application program minor node within an active application program major node.

If the primary LU is a predefined CDRSC, the CDRSC must be active.

If the primary LU is a device-type LU, it must be attached to the same NCP as the secondary LU.

See also the "VARY LOGON command" on page 502 for more information on the operator-initiated logon function.

NEWPATH=name

Specifies the dynamic path update member names in the VTAM definition library. When the NCP is successfully activated, VTAM processes and sends path table update specifications to the NCP. The NEWPATH operand is valid only when an NCP major node is being activated.

Up to three member names can be specified; if more than three member names are specified, the VARY command is rejected, and you must issue a new path command to activate the NCP. If more than one member name is specified, the names must be enclosed in parentheses and separated by commas.

VTAM sends the path table update specifications by means of the SSCP-PU session before any links, other than the link for the SSCP-PU session, are activated. If you attempt to change or delete the explicit route being used for the SSCP-PU session, the NCP rejects the request (because the explicit route is currently operative), and VTAM displays a warning message.

This operand overrides NEWPATH specifications on the PCCU definition statement in the NCP's generation file (see the *z/OS Communications Server: SNA Resource Definition Reference*). For example, if the PCCU NEWPATH operand specifies three member names and the VARY ACT NEWPATH operand specifies one member name, only the one member specified in the VARY ACT command is processed. If you specify "NEWPATH=," or "NEWPATH= " in the VARY ACT command, the NEWPATH operand coded in the PCCU definition statement is nullified.

NEWPATH processing does not affect NCP activation in any way. For example, if the member specified with the NEWPATH operand cannot be processed because of a shortage of VTAM storage, an appropriate message is displayed and no further recovery processing is attempted.

When a dynamic path update member is processed as a result of a NEWPATH operand, any path table update specifications for VTAM subareas and other NCP subareas are discarded. However, VTAM checks the validity of PATH statements and issues warning messages if errors are detected.

RNAME=name

Applies to the activation of an NCP or, in certain migration cases, to the activation of a link station.

For an NCP, the RNAME operand is described in the following paragraphs and applies only to the first activation of the NCP. (That is, RNAME does not apply if the NCP is already active or is in the process of being activated.)

Note: When activating NCPs, if the RNAME is referring to a switched link station, activate the switched major node before issuing the VARY ACT command for the NCP. Otherwise, the NCP activation might fail.

RNAME specifies the names of up to 13 SDLC or channel link stations in adjacent subarea nodes through which the specified NCP is attached to the network. It also specifies which link stations (and associated links) in adjacent subarea nodes are to be automatically activated as part of the activation of the specified NCP. Therefore, these RNAME values identify the location of the

communication controller in the network and enable VTAM to establish the necessary connectivity to the specified NCP (if such connectivity does not already exist).

If more than one link station name is specified, the names must be enclosed in parentheses and separated by commas.

The RNAME operand, if specified, overrides any NCP definition RNAME values or the checkpointed RNAME values for the specified NCP. For a list of the checkpointed parameters for each major node and for a general description of the configuration restart facility, see the *z/OS Communications Server: SNA Network Implementation Guide*.

If RNAME values are specified on this command, VTAM uses those values to determine the link stations to be used. If the RNAME operand is not specified on this command, VTAM uses the checkpointed RNAME values for the specified NCP (if the WARM operand is specified). If neither the RNAME nor the WARM operand is specified, VTAM uses the NCP definition values for RNAME, if any. If RNAME is not specified in the NCP definition, RNAME assumes a null value, and no SDLC link stations are automatically activated. If the RNAME operand is specified without a value (that is, RNAME= is specified), RNAME assumes a null value.

If both the RNAME and the device number specifications have null values, no automatic link station activations are performed, and there must be link stations already active in adjacent subarea nodes to provide the required connectivity. If this is not so, the VARY ACT command fails.

SAVEMOD

Applies only if LOAD=YES or LOAD=U. It specifies whether the NCP load module is saved on the communication controller hard disk after the NCP is loaded from the host.

See Table 8 on page 462 and Table 9 on page 463 for additional information about SAVEMOD specifications.

SAVEMOD=YES

Saves the NCP on the communication controller hard disk after the NCP is loaded from the host.

If both load module data sets are full for this CCU, and:

- The name specified matches the name of a load module already stored, the load module with that name is replaced.
- The name specified does not match the name of a load module already stored, the oldest load module is replaced.

SAVEMOD=NO

Does not save the NCP load module on the IBM 3720 or 3745 Communication Controller hard disk after the NCP is loaded from the host.

SCOPE

Specifies the scope of the command.

WARM and SCOPE cannot be specified on the same command. If both are specified, the command fails.

The only SCOPE value applicable to model major node, LUGROUP major node, path definition set, or adjacent SSCP tables is SCOPE=SYNTAX.

SCOPE has no effect for a TRL major node. If the SCOPE value is specified for this resource, VTAM issues message IST1275I to indicate that the operand was ignored and continues processing.

For configuration restart, the checkpoint data set is updated with information on these resources, unless SCOPE=SYNTAX is specified. No information is stored in the checkpoint data set if the SYNTAX option is used.

SCOPE=ALL
Specifies that the resource named in the ID operand and all of the appropriate subordinate resources are to be activated (regardless of their defined ISTATUS values).

SCOPE=COMP
Specifies one of the following actions:

- For the initial activation of a major node, activates all subordinate minor nodes according to the ISTATUS specification. (This is the same as SCOPE=U.)
- For a major node that is already active:
  - If UPDATE=ADD|ALL is specified on the same command, VTAM updates the current configuration to match the VTAMLST definition and activates minor nodes based on the ISTATUS value.
  - If UPDATE=IMPLICIT is specified or assumed by default, VTAM activates all subordinate minor nodes that were not previously active. (Logical units are activated according to their ISTATUS specification if the PU was not previously active. Otherwise, they are not activated.)
- For a minor node, the action depends on the node type, as follows:

Node	Action
Group, PU	Same as SCOPE=U
Line, LU, APPL, CDRSC, link station	Same as SCOPE=ONLY

LU activation varies according to the owning PU status when processing a SCOPE=COMP on an active major node. A previously inactive PU is activated and its subordinate LUs are activated according to their ISTATUS specification. The LUs of a previously active PU are ignored.

SCOPE=ONLY
Specifies that only the resource named in the ID operand is to be activated; none of its subordinate resources are to be activated (regardless of their defined ISTATUS values).

SCOPE=SYNTAX
Specifies that the major node named on the ID operand is to have its VTAMLST definition file checked for syntax errors. This validation does not include user-replaceable tables such as USS tables, ALS tables, and the like. The error checking consists of validation of syntax, definition statements, operands, and the type of the operands. This checking is the same as is done when the VARY ACT command is used to activate a resource. When SCOPE=SYNTAX is specified, no resource activation takes place.

The ID operand is required. The LOADMOD operand must be used if the name specified on the PUNAME operand in the NCP BUILD definition

statement is not the same as the load module name. See the description of the ID operand for more information. All other operands are ignored if SCOPE=SYNTAX is specified.

All major node types (including path definition set and adjacent SSCP tables) shown in Figure 6 on page 459 can be specified using SCOPE=SYNTAX.

Note: SCOPE=SYNTAX builds an internal representation of the resources in the file being checked, and might have an impact on storage until the command completes. VTAM uses approximately 600 bytes of storage for each definition statement included in the definition file. See the *z/OS Communications Server: SNA Resource Definition Reference* for more information about definition statements.

SCOPE=U
Specifies that the resource named in the ID operand, and all the appropriate subordinate resources defined with ISTATUS=ACTIVE, are to be activated.

U=channel_unit_address
Specifies the hexadecimal device number by which a channel attachment to a communication controller, to an adjacent host, or to an SNA physical unit is known to the operating system and through which VTAM is to establish connectivity to the specified NCP, VTAM, or physical unit. A device number must be supplied for a channel-attached physical unit because the physical unit can communicate only through the channel. Likewise, a device number must be supplied for a channel-attached host because the adjacent host can communicate directly only through the channel attachment. A device number is optional for an NCP because an NCP can also communicate across SDLC links. This operand has no effect if the node is being activated or is currently active.

- For a **channel-attachment major node**, the U operand overrides any previous device number specifications, including the ADDRESS operand on the LINE definition statement of the channel-attachment major node definition.

  Omit the U operand if you are activating a channel-attachment major node that has LNCTL=MPC in its definition. Otherwise, the activation of resources in the multipath channel (MPC) group will fail.

  If the U operand is omitted and there is no current device number specification for VTAM, the VARY ACT command fails. The VARY ACT command also fails if the U operand is specified without a value (that is, if U= is specified).
- For an **SNA physical unit**, the U operand, if specified, overrides any previous device number specifications for the physical unit, including the CUADDR operand on the PU definition statement.

  The U operand, if specified, overrides any specification maintained by configuration restart.

  If the U operand is omitted and there is no current device number specification for the physical unit, the VARY ACT command fails. The VARY ACT command also fails if the U operand is specified without a value (that is, if U= is specified).
- For an **NCP**, the U operand, if specified, overrides any NCP definition CUADDR values or the checkpointed device number values for the specified NCP. If a U value is specified on this command, VTAM uses the value to determine the link station to be used. If the U operand is not specified on this

command, VTAM uses the checkpointed device number values for the specified NCP (if the WARM operand is specified). If neither the U nor the WARM operand is specified, VTAM uses the NCP definition value for CUADDR, if any. If CUADDR is not specified in the NCP definition, the device number specification assumes a null value, and no channel link station is automatically activated. If the U operand is specified without a value (that is, if U= is specified), the device number specification assumes a null value.

If both the RNAME and the device number specifications have null values, no automatic link station activations are performed, and there must be link stations already active in adjacent subarea nodes to provide the required connectivity. If this is not so, the VARY ACT command fails.

UPDATE

Allows you to dynamically implement changes that you have made in a VTAMLST definition file. You can use the UPDATE operand to make the following kinds of dynamic reconfiguration changes:

- Cross Domain Resource (CDRSC) major node: add, delete, or replace CDRSCs; dynamically change operand values on CDRSC definition statements.
- Local SNA major node: add and delete LUs; dynamically change certain operand values on LU definition statements.
- NCP major node: add, delete, and move PUs and LUs; dynamically change certain VTAM-only operand values on PU and LU definition statements.
- Switched major node: add and delete PUs and LUs; dynamically change certain operand values on PU, LU, and PATH definition statements.
- Transport resource list (TRL) major node: add, delete, or replace TRLEs; dynamically change operand values on TRLE definition statements.

VTAM reads the VTAMLST definition file for the major node and updates the current configuration to match the definition. The affected minor nodes must be inactive (except for PATH definition statements in the switched major node), but the major node can remain active. For more information on dynamic reconfiguration, see the *z/OS Communications Server: SNA Network Implementation Guide*. For information on which operands in PU and LU definition statements can be dynamically changed, see the *z/OS Communications Server: SNA Resource Definition Reference*.

If you have used the VARY LOGON command to establish an automatic logon relationship that was not coded on the LOGAPPL operand of a definition statement, or if you have used the VARY NOLOGON command to terminate an automatic logon relationship that was coded on the LOGAPPL operand of a definition statement, the VARY ACT,UPDATE=ALL command might undo the effects of these commands. This is because the LOGAPPL operand in the definition file overrides these commands. Even if no LOGAPPL is coded in the definition file, VTAM assumes a null value for LOGAPPL and the null value overrides the VARY LOGON value. To avoid undoing the effects of the VARY LOGON command, code the LOGAPPL definition statement with the desired value. To avoid undoing the effects of the VARY NOLOGON command, delete the LOGAPPL operand from the definition statement. VARY ACT,UPDATE=ALL can undo the effects of the MODIFY DEFAULTS command in the same way.

VTAM issues an error message if a VARY ACT,UPDATE=ALL command is attempted for an active resource. For example, you might have activated an NCP, then issued a VARY LOGON command for some of the LUs under the

NCP. (The VARY LOGON command overrides the LOGAPPL value that was used during NCP activation.) If you later issue a VARY ACT,UPDATE=ALL command to make some other kind of change, such as moving a PU from one line to another, and meanwhile the LUs are active that have the new LOGAPPL value, VTAM will issue an error message. This is because the VARY ACT,UPDATE=ALL command overrides the VARY LOGON command; that is, VTAM encounters a defined LOGAPPL value that is different from the current value, so it attempts an operand change, but the operand change fails because the LUs are active.

Dynamic reconfiguration for an NCP:

For an NCP, this command performs the following functions without regenerating the NCP:

- Adds a nonswitched physical unit and its subordinate LUs to a line
- Adds a logical unit to a nonswitched physical unit
- Passes the GP3174 and RETRIES operands to NCP when dynamically adding a PU
- Moves a nonswitched physical unit and its subordinate LUs from one line to another
- Moves a logical unit to another physical unit
- Changes a nonswitched physical unit link station address (except on the initial activation of the NCP)
- Changes the LOCADDR for an LU (except on the initial activation of the NCP)
- Deletes a nonswitched physical unit and its subordinate LUs from a line
- Deletes a dependent logical unit from a nonswitched physical unit
- Changes certain operand values in PU and LU definition statements
- Adds or deletes frame relay PUs and their associated FRSESET definition statements

The active and inactive requirements for the reconfiguration operations are shown in Table 11.

Table 11. Active and inactive status requirements for dynamic reconfiguration of an NCP

Operation	Major node	LINE	PU	LU
Add LU	Active	Either	Either	N/A
Add PU	Active	Either	N/A	N/A
Delete PU[1]	Active	Either	Inactive	Inactive
Delete LU[1]	Active	Either	Either	Inactive
Move PU	Active	Either	Inactive	Inactive
Move LU	Active	Either	Either	Inactive

Note:

1. The current state and desired state of the resource must be inactive.

To prepare another host for backup and takeover, you can issue a VARY ACT command with the UPDATE operand at a VTAM that does not own selected NCP resources to prepare that VTAM for a future takeover of those resources. The command fails if UPDATE is specified on the same command with the

LOGON, LOGMODE, WARM, or ACQ (as in VARY ACQ) operands. UPDATE has no meaning on the initial activation of major nodes other than an NCP major node.

Conflicts can arise between the NCP source file and the generated NCP load module. If you modify the NCP source, moving PUs and LUs, use UPDATE=ALL when activating an inactive NCP. Otherwise VTAM and NCP will not agree on the location of the PUs and LUs. It is recommended that you always use UPDATE=ALL for the initial activation of an NCP if you are using (or plan to use) dynamic reconfiguration with that NCP. If the source file has changed, VTAM will make the changes and bring up the NCP correctly. If the source file has not changed, VTAM will bring up the NCP as usual.

You can use VARY ACT with the UPDATE operand to dynamically reconfigure a frame relay switching equipment set (FRSESET). In order to modify a FRSESET, you need to know whether the FRSESET was statically or dynamically defined. If you are not sure, you can issue a DISPLAY NET,ID=*frseset_name* command to find out. Statically means that the FRSESET was included in the NCP generation. Dynamically means that the FRSESET was not included in the NCP generation. Statically and dynamically defined PUs cannot be specified in the same FRSESET; the PUs must be all static or all dynamic.

If the FRSESET was dynamically defined, you can dynamically add and delete PUs from the set. You can delete PUs with the MODIFY DR, VARY DRDS, or VARY ACT,UPDATE=ALL commands. You can add PUs only with the VARY ACT,UPDATE=ADD or VARY ACT,UPDATE=ALL command.

If the FRSESET was statically defined, you can delete PUs from the set, but you cannot add PUs. In practical terms, this means you need to delete the entire FRSESET and then add it back dynamically in order to make changes. For example, if you have a statically defined FRSESET containing two primary PUs and you want to add two backup PUs, follow these steps:

1. Delete the two primary PUs, thereby deleting the FRSESET itself (because it is empty).
2. Edit the VTAMLST source file to add the PU definitions for the backup PUs and add the backup PUs to the FRSESET.
3. Use the VARY ACT command with UPDATE=ADD or UPDATE=ALL. The VARY ACT command causes the FRSESET to be dynamically defined.

If you delete one or more PUs (using MODIFY DR or VARY DRDS) from a statically defined FRSESET without deleting the whole FRSESET, VARY ACT will cause the deleted PUs to be added back, but they will not be part of the FRSESET.

The first PU under a frame relay line (the LMI) cannot be deleted and it cannot be part of a FRSESET.

For more information on how to define frame relay lines, frame relay PUs, and FRSESETs, see the *z/OS Communications Server: SNA Resource Definition Reference*.

Dynamic reconfiguration for local SNA major nodes:

This command adds and deletes LUs for local SNA major nodes.

The active and inactive requirements for the reconfiguration operations are shown in Table 12.

Table 12. Active and inactive status requirements for dynamic reconfiguration for a local SNA major node

Operation/ resource	Major node	LINE	PU	LU
Add LU	Active	Either	Either	N/A
Delete LU	Active	Either	Either	Inactive

UPDATE=IMPLICIT
Only has meaning on the initial activation of an NCP. Otherwise UPDATE=IMPLICIT has no effect. For the initial activation of an NCP, UPDATE=IMPLICIT dynamically adds resources. If you specify UPDATE=IMPLICIT for a TRL major node, it is changed to UPDATE=ADD.

UPDATE=ADD
Allows you to add resources. The major node must be active, unless it is an NCP major node, which can be either active or inactive. VTAM reads the VTAMLST definition file for the major node and adds any new resources to the current configuration. For a TRL major node, this is the default.

UPDATE=ALL
Allows you to add, move, and delete resources in certain major nodes, and to add, delete, and replace existing TRLEs in an active TRL major node. TRLEs that are in use, however, are not deleted and remain in the TRL major node along with the new TRLEs.

Note: Moving resources requires that you issue the VARY ACT,UPDATE command twice. Resource deletions occur during the first processing of the command, and resource additions occur during the second processing of the command. See the *z/OS Communications Server: SNA Network Implementation Guide* for more information on dynamic reconfiguration changes.

UPDATE=ALL also allows you to change certain VTAM-only operands in PU, LU, and CDRSC definition statements in the following active nodes:
- Cross-domain resource major node
- Local SNA major node
- NCP major node (VTAM-only operands)
- Switched major node

See the major node descriptions in the *z/OS Communications Server: SNA Resource Definition Reference* for more information on the operands that you can change for each major node.

VRTGCPCP
Applies for cross-domain resource managers (CDRM) and indicates whether the virtual-route-based transmission group is to support CP-CP sessions. This operand allows the value of the VRTGCPCP operand on the CDRM definition statement to be overridden. If VRTGCPCP is not specified on the VARY ACT command, CP-CP session capability over the virtual-route-based transmission group connection is determined from the CDRM definition statement or from the VRTGCPCP start option. If VRTGCPCP is specified on the VARY ACT command, the value affects only a single activation instance. Subsequent activations use the predefined values for that CDRM.

This operand is only valid if VRTG=YES is specified for the CDRM, and the CDRM is in an inactive or connectable state; otherwise the command fails and an error message is issued.

VRTGCPCP=YES
Specifies that the virtual-route-based transmission group is to support CP-CP sessions.

VRTGCPCP=NO
Specifies that the virtual-route-based transmission group is not to support CP-CP sessions.

WARM
Applies only to certain major nodes (as shown in Figure 6 on page 459) and specifies that the major node named in the ID operand is to be activated to the status it had when it was last active. That is, those minor nodes that were active the last time the major node was active are reactivated, and other operator-modified values applicable to the major node or its minor nodes (such as controller application name and logmode name for a logical unit) are restored. By recording changes in a configuration restart file, VTAM tracks the status of the minor nodes as well as operator changes to other checkpointed parameters. For a list of the checkpointed parameters for each major node and for a general description of the configuration restart facility, see the *z/OS Communications Server: SNA Network Implementation Guide*.

The WARM operand is not allowed and the VARY ACT command fails in the following circumstances:

- WARM and SCOPE are specified on the same command.
- WARM is specified for a major node that is already active.
- WARM is specified when activating a major node that has no associated VSAM configuration restart file or whose configuration restart file has not been used (that is, contains no checkpointed information).

If you used a VARY ACT,UPDATE=ALL command for dynamic reconfiguration of the major node at some time prior to the warm start, the dynamic reconfiguration changes stay in effect after the warm start. This is because VTAM takes a checkpoint during the VARY ACT,UPDATE=ALL processing.

VARY ANS command

```
►►──VARY NET──,ANS=──┬─OFF─┬──,ID=line_name──┬──────┬──────────────────────────►◄
                     └─ON──┘                 └─,ACT─┘
```

Abbreviations

Operand	Abbreviation
VARY	V

Purpose

The VARY ANS (answer mode) command enables active switched SDLC lines with dial-in capability to allow or disallow an incoming call from a physical unit defined in a switched major node. For an incoming call to be allowed, an active line must be in answer mode.

The mode setting can be specified in the definition statement for the line and can be changed whenever the line is active by using this command. The mode setting of a line can also be specified when the line is activated (see the description of the ANS operand on the VARY ACT command).

The VARY ANS command is most often used for lines with both dial-in and dial-out capability. To ensure that a line is available for dial-out requests, it can be taken out of answer mode while it is still active. Incoming calls are blocked, but outgoing calls proceed normally.

Operands

ACT
Activates the line, if it is not active already.

ANS
Specifies whether the line is to be put in answer mode.

ANS=ON
Specifies that the line is to be put in answer mode. When a line is in answer mode (and active), the answering subarea node accepts an incoming call from a dial-in device and notifies VTAM of the call so that sessions can be established.

ANS=OFF
Specifies that the line is to be taken out of answer mode. If there is an existing session using the line, ANS=OFF does not break the session, but no further incoming calls are accepted after the session ends.

ID=line_name
Specifies the name of an SDLC line. The line must be a switched line with dial-in capability. The line must be active, unless the ACT operand is also specified on this command.

VARY CFS command

```
►►──VARY NET──,CFS──,ACTION=──┬─CONNECT────┬──,STRNAME=──┬─ALL──────────────┬──────────►◄
                              └─DISCONNECT─┘             └─structure_name───┘
```

Abbreviations

Operand	Abbreviation
VARY	V
ACTION=CONNECT	CONNECT
ACTION=CONNECT	CONN
ACTION=DISCONNECT	DISCONN
ACTION=DISCONNECT	DISC

Purpose

The VARY CFS command is used to connect to a VTAM coupling facility structure or disconnect from a VTAM coupling facility structure. Normally, connecting or disconnecting to a coupling facility structure is handled automatically by VTAM. The VARY CFS command allows an operator to perform these functions outside normal VTAM processing.

If VTAM is unable to connect to a coupling facility structure or loses its connection to a coupling facility structure, it will use the event notification facility to know when to attempt a reconnection to the coupling structure. The event notification facility will notify VTAM when changes occur in coupling facility resources. This reconnection process is automatic and requires no operator intervention. However, if VTAM disconnects due to the VARY CFS,ACTION=DISCONNECT command, VTAM will ignore event notifications for the particular structure. The VARY CFS,ACTION=CONNECT command must be issued to cause VTAM to reconnect to the structure and also enable event notification for the structure.

To determine if VTAM is using the event notification for a disconnected structure, issue the D NET,STATS,TYPE=CFS command. Message IST1368I will be issued if VTAM is receiving event notifications for the structure.

Operands

ACTION
Specifies that VTAM is to attempt to connect to or disconnect from the coupling facility structure specified by the STRNAME parameter.

ACTION=CONNECT
Specifies that VTAM is to attempt to connect to the coupling facility structure specified by the STRNAME parameter.

ACTION=DISCONNECT
Specifies that VTAM is to disconnect from the coupling facility structure specified by the STRNAME parameter.

STRNAME
Specifies the name of the structure to connect to or disconnect from.

STRNAME=ALL
Specifies that VTAM will disconnect from all coupling facility structures. STRNAME=ALL can be specified for ACTION=DISCONNECT only.

STRNAME=*structure_name*
Specifies the name of the structure to connect to or disconnect from.

VARY DIAL command

```
►►──VARY NET,DIAL──,ID=resource_name──┬──────────────────────┬──────────────────────────►◄
                                      └─,CPCP=──┬─YES─┬──┘
                                                └─NO──┘
```

Abbreviations

Operand	Abbreviation
VARY	V

Purpose

The VARY DIAL command can be used to establish the following:

- A switched subarea connection so that LU-LU sessions can be started
- A switched connection to a type 1,2, or 2.1 device (adjacent link station)
- A CPSVRMGR session between a dependent LU requester (DLUR) and a dependent LU server (DLUS)

Operands

CPCP

Applies for adjacent link stations and allows the value of the CPCP operand on the PU definition statement to be overridden. If CPCP is not specified on the VARY DIAL command, the value for CP-CP session support on the connection is determined from the PU definition statement or from the CPCP start option. If CPCP is specified on the VARY DIAL command, the CP-CP session support on the connection is taken from the command value for a single activation instance. Subsequent activations use the predefined values for that PU.

If the resource does not support APPN, then an error message is issued and the command fails.

The resource must be in a connectable state; otherwise the command fails and an error message is issued. CP-CP session capability is determined during XID exchange and cannot be changed after a session is established.

CPCP=YES

Indicates that the connection is to support CP-CP sessions.

CPCP=NO

Indicates that the connection is not to support CP-CP sessions.

ID=resource_name

Specifies the name of a resource. This value can be one of the following:

- The name of the link station specified in the switched major node that specifies the NCP or VTAM to be connected.
- A PU name that specifies a link station with a PUTYPE of 1,2, 2.1, 4, or 5
- The name of a PU supported by a DLUR

VARY DRDS command

```
►►──VARY NET,DRDS──,ID=dr_file_name──────────────────────────────────────►◄
```

Abbreviations

Operand	Abbreviation
VARY	V

Purpose

The VARY DRDS command dynamically reconfigures an NCP or a nonswitched peripheral node. If the physical configuration of a communication controller is changed (for example, a physical unit is moved from one line to another), the NCP residing in the communication controller can be reconfigured without having to generate a new NCP. To use this command, a previously filed set of statements called a ***dynamic reconfiguration*** (DR) file must be available before the major node can be reconfigured. For information on dynamic reconfiguration, see the *z/OS Communications Server: SNA Network Implementation Guide*. For information on creating a DR file, see the *z/OS Communications Server: SNA Resource Definition Reference*.

Minor nodes that are dynamically added as a result of this command are automatically activated if the DR definition file defines their initial status as active.

Dynamic reconfiguration for an NCP:

For an NCP, this command performs the following functions without regenerating the NCP:

- Adds a nonswitched physical unit and its subordinate LUs to a line.
- Adds a logical unit to a nonswitched physical unit.
- Adds a type 2.1 PU to an NCP ESCON channel.
- Adds an independent LU to an NCP ESCON channel.
- Passes the GP3174 and RETRIES operands to NCP when dynamically adding a PU.
- Moves a nonswitched physical unit and its subordinate LUs from one line to another.
- Changes a nonswitched physical unit link station address.
- Deletes a nonswitched physical unit and its subordinate LUs from a line.
- Deletes a logical unit from a nonswitched physical unit.
- Deletes a type 2.1 PU from an NCP ESCON channel.
- Deletes an independent LU from an NCP ESCON channel.
- Deletes frame relay type 1 PUs. The first PU (the LMI) under a frame relay line cannot be deleted.

The active and inactive requirements for VARY DRDS for an NCP are shown in Table 13 on page 486.

Table 13. Active and inactive status requirements for VARY DRDS for an NCP

Operation/ resource	Major node	LINE	PU	LU
Add LU	Active	Either	Either	N/A
Add PU	Active	Either	N/A	N/A
Delete PU[1]	Active	Either	Inactive	Inactive
Delete LU[1]	Active	Either	Either	Inactive
Move PU	Active	Either	Inactive	Inactive

Note:

1. The current state and desired state of the resource must be inactive.

In order to modify a frame relay switching equipment set (FRSESET), you need to know whether the FRSESET was statically or dynamically defined. If you are not sure, you can issue a DISPLAY NET,ID=*frseset_name* command to find out. Statically means that the FRSESET was included in the NCP generation. Dynamically means that the FRSESET was not included in the NCP generation. Statically and dynamically defined PUs cannot be specified in the same FRSESET; the PUs must be all static or all dynamic.

If the FRSESET was dynamically defined, you can dynamically add and delete PUs from the set. You can delete PUs with the MODIFY DR, VARY DRDS, or VARY ACT,UPDATE=ALL commands. You can add PUs only with the VARY ACT,UPDATE=ADD or VARY ACT,UPDATE=ALL command.

If the FRSESET was statically defined, you can delete PUs from the set, but you cannot add PUs. In practical terms, this means you need to delete the entire FRSESET and then add it back dynamically in order to make changes. For example, if you have a statically defined FRSESET containing two primary PUs and you want to add two backup PUs, first delete the two primary PUs, thereby deleting the FRSESET itself (because it is empty). Then edit the VTAMLST source file to add the PU definitions for the backup PUs (if necessary) and add the backup PUs to the FRSESET. Then use the VARY ACT command with UPDATE=ADD or UPDATE=ALL. The VARY ACT command causes the FRSESET to be dynamically defined.

If you delete one or more PUs (using MODIFY DR or VARY DRDS) from a statically defined FRSESET without deleting the whole FRSESET, VARY ACT will cause the deleted PUs to be added back, but they will not be part of the FRSESET.

The first PU under a frame relay line (the LMI) cannot be deleted and it cannot be part of a FRSESET.

For more information on how to define frame relay lines, frame relay PUs, and FRSESETs, see the *z/OS Communications Server: SNA Resource Definition Reference*.

Dynamic reconfiguration for local SNA major nodes:

This command adds and deletes LUs for local SNA major nodes.

The active and inactive requirements for the reconfiguration operations are shown in Table 14 on page 487.

Table 14. Active and inactive status requirements for VARY DRDS for local SNA major nodes

Operation/ resource	Major node	LINE	PU	LU
Add LU	Active	Either	Either	N/A
Delete LU	Active	Either	Either	Inactive

Operands

ID=dr_file_name
Specifies the name of a dynamic reconfiguration file.

VARY HANGUP command

```
►►──VARY NET,HANGUP──,ID=link_station_name──────────────────────────────►◄
```

Abbreviations

Operand	Abbreviation
VARY	V

Purpose

VARY HANGUP is used to take down a switched subarea connection or a switched connection to a type 1,2, or 2.1 device. This allows the connection to be terminated when it is no longer necessary.

Notes:

1. VARY HANGUP only terminates the switched connection; it does not deactivate the line or the physical unit.
2. If the existing connection is for Enterprise Extender and DWINOP=YES is specified on the switched PU definition on the remote host, the remote host will attempt to redial the partner on this host when the VARY HANGUP command is issued on this host. If the VARY HANGUP command successfully places the switched PU in connectable state, then the dial-in from the remote host will be accepted and the connection will be reestablished.

   Issuing VARY INACT for the switched PU will prevent this from occurring unless VARY ACT is then issued for the switched PU before either all dial retries by the remote host have completed or VARY INACT is issued for the switched PU on the remote host to terminate the redial attempts. Refer to the descriptions of the DWINOP, REDIAL, and REDDELAY operands in *z/OS Communications Server: SNA Resource Definition Reference* for details.

   In addition, coding CALL=OUT on the Enterprise Extender PATH statement under the PU, or ANSWER=OFF on the GROUP statement in the XCA major node to which the PATH statement applies, will prevent inbound dial attempts from being successfully directed to this PU.

Operands

ID=link_station_name

Specifies the name of the link station. *link_station_name* can be the link station in the switched major node that specifies the NCP or VTAM to be disconnected, or *link_station_name* can be a link station (PU) with a PU type of 1,2, 2.1, 4 or 5.

VARY INACT command

Deactivate an NCP major node:

```
►►──VARY NET,INACT──,ID=ncp_name──┬─,CDLINK=ACT──────────┬──┬─,RMPO=NO──────────┬──►
                                  └─,CDLINK=──┬─ACT──┬────┘  └─,RMPO=──┬─NO───┬────┘
                                              └─INACT┘                  └─YES──┘

►──┬─,TYPE=──┬─FORCE──┬──────────────────────────────────────────────────────►◄
   │         ├─IMMED──┤
   │         ├─REACT──┤
   │         └─UNCOND─┘
   └──────────────────┘
```

Deactivate an NCP line:

```
►►──VARY NET,INACT──,ID=line_name──┬──────────────────────────────────────────►◄
                                   └─,TYPE=──┬─FORCE───┬──┘
                                             ├─GIVEBACK┤
                                             ├─IMMED───┤
                                             └─UNCOND──┘
```

Deactivate a CDRM major node:

```
►►──VARY NET,INACT──,ID=node_name──┬──────────────┬──┬──────────────────────────►◄
                                   └─,SAVESESS────┘  └─,TYPE=──┬─FORCE──┬──┘
                                                               ├─IMMED──┤
                                                               └─UNCOND─┘
```

Deactivate a CDRM minor node:

```
►►──VARY NET,INACT──,ID=node_name──┬──────────────┬──┬──────────────┬──────────►
                                   └─,IDTYPE=SSCP─┘  └─,SAVESESS────┘

►──┬─,TYPE=──┬─FORCE──┬──────────────────────────────────────────────────────►◄
   │         ├─IMMED──┤
   │         ├─REACT──┤
   │         └─UNCOND─┘
   └──────────────────┘
```

Deactivate a CDRSC minor node:

```
►►──VARY NET,INACT──,ID=node_name──┬─,DELETE=NO──────────┬──┬──────────────┬──►
                                   └─,DELETE=──┬─NO───┬────┘  └─,IDTYPE=CP─┘
                                               └─YES──┘
```

```
►─┬──────────────────────────┬──────────────────────────────────────────►◄
  └─,TYPE=─┬─FORCE──┬─┘
           ├─IMMED──┤
           └─UNCOND─┘
```

Deactivate the dynamic XCF local SNA major node:

```
►►─VARY NET,INACT──,ID=ISTLSXCF─┬──────────────────────────┬──────────────►◄
                                └─,TYPE=─┬─FORCE──┬─┘
                                         ├─IMMED──┤
                                         └─UNCOND─┘
```

Deactivate a dynamic XCF local SNA PU:

```
►►─VARY NET,INACT──,ID=name─┬──────────────────────┬─┬──────────────────────────┬──────────►◄
                            └─,IDTYPE=XCFCP────────┘ └─,TYPE=─┬─FORCE──┬─┘
                                                              ├─IMMED──┤
                                                              └─UNCOND─┘
```

Deactivate a dynamic switched PU:

```
►►─VARY NET,INACT──,ID=pu_name─┬──────────────────────────┬──────────────►◄
                               └─,TYPE=─┬─FORCE──┬─┘
                                        ├─IMMED──┤
                                        └─UNCOND─┘
```

Deactivate a dependent LU requester (DLUR):

```
                                   (1)  ┌─,FINAL=NO──────┐
►►─VARY NET,INACT──,ID=dlur_name──────┤                 ├──────────────────►
                                        └─,FINAL=─┬─NO──┬─┘
                                                  └─YES─┘

►─┬──────────────────────────┬──────────────────────────────────────────►◄
  └─,TYPE=─┬─FORCE────┬─┘
           ├─GIVEBACK─┤
           ├─IMMED────┤
           └─UNCOND───┘
```

Notes:

1 Depending on the value of the VARYWLD start option, wildcard values can be used for this operand.

Deactivate a PU supported by a DLUR:

```
►►──VARY NET,INACT──,ID=pu_name──┬──────────────────────────────┬──────────────────────────►◄
                                 └─,TYPE=──┬─FORCE────────┬──┘
                                           ├─GIVEBACK─────┤
                                           ├─IMMED────────┤
                                           ├─REACT────────┤
                                           └─UNCOND───────┘
```

Deactivate other PUs:

```
                                 ┌─,FINAL=NO──────────────────────────────┐
►►──VARY NET,INACT──,ID=pu_name──┼────────────────────────────────────────┼──────────────►
                                 └─,FINAL=──┬─NO──┬──────────────────────┬──┬──┬──
```

When using an abbreviation in place of an operand, code the abbreviation exactly as shown in the table. For example, when coding the abbreviation for TYPE=IMMED, code only I or IMMED. Do not code TYPE=I.

Purpose

The VARY INACT command deactivates VTAM resources. For SDLC switched and nonswitched links in a multiple-domain network, it can also return ownership of the line and its associated resources to the original SSCP without disrupting LU-LU sessions. This is usually done as part of error recovery procedures after one SSCP has taken over a failed SSCP's resources. For information on the deactivation of links and link stations, see the *z/OS Communications Server: SNA Network Implementation Guide*.

Figure 8 on page 493 shows each resource type for which the command is valid and which operands can be used on the command. A large dot means the operand applies to that resource. An I or F in the table shows what value is substituted if an IMMED, UNCOND, FORCE, or REACT operand is specified for a resource to which it does not apply.

VARY INACT

CDLINK=ACT/INACT	DELETE=YES/NO	FINAL=YES/NO	IDTYPE = CP	IDTYPE = SSCP	IDTYPE = XCFCP	RMPO=YES/NO	SAVESESS	TYPE=FORCE	TYPE=GIVEBACK	TYPE=IMMED/UNCOND	TYPE=REACT	ID=
												Adjacent CP major node
								●		●	F	**Application program major node**
								●		●	F	Application program minor node
								●		●	I	**Channel-attachment major node**
								●		●	F	Channel link
								●		●	●	Channel link station
								●		●	F	**CDRSC major node**
	●		●					●		●	F	CDRSC minor node
			●					●		F	F	CDRSC minor node - adjacent CP
							●	●		●	F	**CDRM major node**
				●			●	●		●	F	CDRM minor node
								●		●	I	**XCA major node**
								●		●	F	Nonswitched line
								●		●	●	Link station
								●		●	F	Switched line
								I		●	I	**Local non-SNA major node**
								●		●	F	Local non-SNA logical unit
								●		●	I	**Local SNA major node**
		●						●		●	●	Local SNA physical unit
								●		●	F	Local SNA logical unit
								●		●	F	**LUGROUP major node**
								●		●	F	**Model major node**
●						●		●		●	●	**NCP major node**
								●	●	●	F	Nonswitched line
								●	●	●	F	Switched line
								●		●	●	Link station
		●						●		●	●	Physical unit
								●		●	F	Logical unit
								●		●	I	**Switched major node**
		●						●		●	●	Switched physical unit
								●		●	●	Switched link station
								●		●	F	Switched logical unit
								●		●	I	**Dynamic switched major node**
								●		●	I	Dynamic switched physical unit
								●		●	F	Dynamic switched logical unit
												XCF local SNA major node
												XCF local SNA physical unit
					●							CP name of XCF local SNA physical unit

Figure 8. Valid resource types for VARY INACT

Operands

CDLINK

Applies only to the deactivation of an NCP. It specifies whether active, leased, cross-domain links and link stations are to remain active after the NCP major node is deactivated.

This option is effective only on the VARY INACT or VARY REL command that begins the deactivation of an NCP. For example, if a second VARY INACT (perhaps with the IMMED operand specified) is entered before the first VARY INACT command completes, CDLINK does not apply to the second command and is ignored if specified.

For information on the deactivation of links and link stations, see the *z/OS Communications Server: SNA Network Implementation Guide*.

CDLINK=ACT

Specifies that active cross-domain links and link stations are to remain active after the NCP major node is deactivated, so that sessions routing information through the NCP over such links can continue without disruption.

CDLINK=INACT

Specifies that cross-domain links and link stations are to be deactivated as part of the NCP deactivation. Any session traffic over such links might be disrupted, depending on whether such links and link stations are also owned by some other host. See the *z/OS Communications Server: SNA Network Implementation Guide* for a discussion of how shared ownership affects the results of deactivating a link or link station.

DELETE

Applies only to deactivation of cross-domain resources (CDRSCs). It specifies whether they can be deactivated and, at the same time, the RDTE storage associated with the resource released.

If you specify DELETE without including a qualifier (YES or NO), the RDTE storage associated with the resource is released when the CDRSC is deactivated. This is the same result as if you specified DELETE=YES.

DELETE=YES

Specifies that the RDTE storage associated with the resource is released when the CDRSC is deactivated. If the CDRSC exists in ISTCDRDY, DELETE=YES is not necessary.

DELETE=NO

Specifies that the RDTE storage associated with the resource is not released when the CDRSC is deactivated.

If the CDRSC exists in ISTCDRDY, DELETE=NO is not applicable. If DELETE=NO is specified, it is ignored.

FINAL

Specifies whether the physical unit specified in the ID operand will be reactivated.

FINAL=YES

Specifies that there are no immediate plans to reactivate the physical unit. The actual effects of this operand are device-dependent, and could include such functions as automatic power-off. See the appropriate component's document for the specific effects of a DACTPU type hex 01 command on a

particular device. For physical units in a local SNA or switched major node, FINAL is meaningful only if the physical unit is fully active before deactivation begins.

FINAL=YES is ignored for type 2.1 physical units if ACTPU is not sent.

If you enter FINAL=YES, you cannot enter TYPE=REACT.

Note: VTAM will save an internal indicator that will prevent the DLUR from opening a CPSVMGR session with VTAM. Any attempt to establish a DLUS/DLUR CPSVRMGR session will be rejected with sense code 080A000D. The operator can enable the DLUR again by issuing a VARY ACT on the DLUR CDRSC.

FINAL=NO
Specifies that there are plans to reactivate the physical unit.

ID=name
Specifies the name of any active major or minor node that is to be deactivated. The name can be a network-qualified name. It cannot be a USERVAR or LUALIAS name. If the name specified on the ID operand is network-qualified, this name is considered to be the real name of the resource. The name can be an ACB name or an alias name, as long as it is not network-qualified. (See the description of the ID operand on the VARY ACT command for an example of how you can specify a network-qualified application name.)

To deactivate the dynamic local SNA major node for XCF connections, specify ID=ISTLSXCF.

Attention: Deactivating ISTLSXCF removes all dynamic PUs and TRLEs and causes VTAM to leave the XCF group.If TCP/IP is using XCF connections, those connections are also terminated.

To deactivate a dynamic XCF local SNA PU representing the connection to another VTAM, you can specify one of the following:
- The name of the PU
- The CP name of the other VTAM with IDTYPE=XCFCP

Notes:
1. For a gateway NCP, resources in the nonnative network are not affected by the VARY INACT command.
2. The PUs and LUs within a model major node cannot be individually deactivated with the VARY INACT command. After either a dynamic switched major node or a dynamic switched PU has been deactivated, it cannot be reactivated without being redefined to VTAM. The major difference between dynamically defined devices and statically defined devices is that after a dynamically defined PU is deactivated, its elements will be deleted from VTAM.
3. For ID=*pu_name*, there is no relationship between the PU and the independent LU. Deactivation of the PU ends any LU-LU sessions that are using the connection. However, the actual independent LU resource remains active because it might be in session over another adjacent link station connection.

   Network addresses for the boundary function CDRSC are reclaimed from the terminated sessions if appropriate (for example, if the cross-domain resource is a switched LU), but the RDTE remains intact.
4. For ID=*rtp_pu_name*, TYPE=FORCE is required.

5. For ID=*appl_name*, TYPE=FORCE is required to override persistence and terminate the application and sessions.
6. For a model application program, the state of the model is changed from connectable (CONCT) to inactive (INACT). This means that it can no longer be used to build dynamic application programs. Active dynamic application programs built from the model are not affected by the deactivation of the model.

   For any dynamic application program built from the model, when CLOSE macro processing for the dynamic application program is complete, the definition of the dynamic application program is deleted. The dynamic application program will no longer be known to VTAM and will not appear in the output of any DISPLAY commands.
7. For ID=ISTCDRDY, VTAM deletes all **dynamically** created CDRSC RDTEs and terminates their associated sessions. CP-CP and CPSVRMGR sessions involving this host are terminated if the partner's CDRSC RDTE was dynamically defined. To avoid losing the CP-CP and CPSVRMGR sessions, you can predefine a CDRSC for the partner LU. The name on the CDRSC statement or the LU statement should be the CPNAME of the session partner. Predefining the CDRSC is suggested only if you expect to deactivate ISTCDRDY while CP-CP sessions are active. (This should be rare.) See the *z/OS Communications Server: SNA Resource Definition Reference* for more information on defining cross-domain resources and independent LUs.
8. For a CDRM, you can specify a network-qualified name, but this does not remove the restriction that the non-network-qualified CDRM name must be unique across networks.
9. Issuing a VARY INACT command to terminate the CP-CP session with an adjacent node might cause later session establishment requests to fail. To resolve the problem, reactivate the CP-CP session or else reactivate the link with CPCP=NO so that it will no longer be used in directed search routing.
10. For a dependent LU requester, VTAM deactivates the CDRSC node that represents the CPSVRMGR session between the DLUR and the DLUS. If a dependent LU requester is adjacent to a dependent LU server, the CDRSC also represents the CP-CP session. For a normal deactivation, all pending and queued sessions for supported PUs and LUs fail, but inactivation does not complete until all active LU-LU sessions are terminated. A forced deactivation ends all current sessions for LUs and PUs supported by this DLUR. For a TYPE=GIVEBACK deactivation, wildcard values can be used for *dlur_name*. See the *z/OS Communications Server: SNA Network Implementation Guide* for further information about the CPSVRMGR session.
11. For a PU supported by a DLUR, VTAM deactivates the PU. If there are no active or pending SSCP-PU sessions using the CPSVRMGR session, the CPSVRMGR session is deactivated.

IDTYPE

Specifies the type of resource that the ID operand names. If several types of resources share the same name, IDTYPE identifies which resource the command should act on.

IDTYPE is required and has no default if the resource named on the ID operand is the host CDRM. IDTYPE is optional if the resource is an adjacent

CP or an external CDRM; if both an adjacent CP and an external CDRM are found, the default is IDTYPE=SSCP. If you attempt to deactivate the host CP, the command will fail.

IDTYPE=CP
Deactivates the CP with the name specified on the ID operand.

IDTYPE=SSCP
Deactivates the SSCP with the name specified on the ID operand.

IDTYPE=XCFCP
Deactivates the dynamic XCF local SNA PU representing the connection to another VTAM, when the ID operand specifies the CP name of the other VTAM.

RMPO
Applies only to NCP major nodes. RMPO specifies whether the communication controller in which the NCP is running is to be powered off automatically at the completion of the deactivation.

RMPO can be done only by an implicitly activated link station.

RMPO=YES
Powers off the communication controller automatically. The communication controller must be link-attached, and must support the remote power-off facility for this operand to be effective. Use the same link for the RMPO operation as you used earlier to load and activate the remote NCP.

RMPO=NO
Does not power off the communication controller automatically.

SAVESESS
Applies to CDRM major and minor nodes. SAVESESS specifies that active LU-LU sessions set up using the SSCP-SSCP session, which is being terminated by the VARY INACT command, remain active. Queued or pending sessions using the specified CDRM are terminated.

After you deactivate a CDRM with SAVESESS, the active sessions that remain are no longer associated with the CDRM. Therefore, subsequent activations and deactivations of the CDRM have no effect on these sessions.

The SAVESESS operand is not required during normal deactivation, and if specified, does not change the normal deactivation.

TYPE
Specifies the type of deactivation (other than normal deactivation). Unless IMMED, UNCOND, FORCE, REACT, or GIVEBACK is specified, normal deactivation occurs. The TYPE operand is not valid for an ADJCP major node.

During normal deactivation, queued and pending sessions fail; the VARY INACT command is queued until all active sessions are terminated.

Note: During normal deactivation of an NCP, some active sessions might be disrupted. For more information on the effects of deactivating an NCP, see the *z/OS Communications Server: SNA Network Implementation Guide*.

TYPE=FORCE
Means that the specified resource and applicable subordinate resources are to undergo forced deactivation. This type of deactivation might be advisable for resources that do not respond to normal or immediate (I) deactivation requests, or that are preventing completion of a VTAM HALT command. A

forced deactivation instructs VTAM to deactivate its internal representations of the applicable resources and to send appropriate deactivation requests to the resources or their superior nodes, without waiting for responses to these requests. Therefore, a forced deactivation of a resource could result in a mismatch between VTAM's record of the status of a resource and the actual status of the resource in the network.

If TYPE=FORCE, sessions involving the resources are disrupted, and VTAM might have to wait (depending on how a given application program is coded) for application programs being deactivated, or for application programs in session with resources being deactivated, to formally end their sessions (that is, issue CLSDST) before completing the deactivation. A forced deactivation might cause VTAM to enter the wait state. It could then be necessary to deactivate an associated resource in order to free the system.

Forced deactivation of a local device might result in a slight wait because VTAM might have I/O outstanding for the device. VTAM cannot complete deactivation until the outstanding I/O is completed.

Notes:

1. Normally, all sessions involving a resource that undergoes forced deactivation terminate as a result of this command, but there are exceptions. For example, if there is no CDRM-CDRM session with the owning SSCP of the session partner, or if the CDRM of a session partner is unknown because of takeover, those sessions are not terminated.
2. Forced deactivation of an NCP link unconditionally takes down the link, regardless of the shared ownership of the link. However, any lines under the NCP that would remain active during an automatic network shutdown (ANS) remain active after a forced deactivation of an NCP link or link station.
3. V INACT FORCE deletes a dynamic CDRSC independent of the CDRSCTI start option. This will cause a buffer trace to be turned off.
4. For ID=*rtp_pu_name*, TYPE=FORCE is required.
5. For ID=*appl_name*, TYPE=FORCE is required to override persistence and terminate the application and sessions.

The TYPE=FORCE operand can be specified on a VARY INACT command entered while a normal or immediate deactivation or a VTAM HALT is in progress.

TYPE=GIVEBACK

Applies to SDLC switched and nonswitched links, leased lines, switched PUs that are supported by dependent LU requesters (DLURs) that allow ANS=CONTINUE, and CDRSCs that represent DLURs. (Token ring is considered to be a switched connection.) The specified resource and applicable subordinate resources are released from this SSCP. VTAM terminates queued and pending sessions before deactivating the resource. If the specified resource was defined with ANS=CONTINUE, active LU-LU sessions remain active.

If the link does not support giveback, VTAM waits for the session to terminate before giveback is completed.

Under certain conditions, sessions returned with giveback remain displayable in the SSCP that issued the giveback. Either of the following conditions produce such results:

- If the session partner is in the domain of the SSCP owning the resource before giveback
- If the session is cross-network and the old owner of the resource was a gateway SSCP and was in session with the gateway NCP

Notes:

1. Issuing this command overrides any outstanding command for the node.
2. If you specify GIVEBACK on this command for a switched PU that is supported by a dependent LU requester that does not support ANS=CONTINUE, the value is automatically promoted to FORCE.
3. VARY INACT, TYPE=GIVEBACK will be allowed when issued against a CDRSC representing a DLUR. GIVEBACK on a CDRSC will be treated similar to a REACT on other node types. The following will be the result of issuing GIVEBACK on a CDRSC:
   - If the CDRSC is not a DLUR, the command will be rejected.
   - If the PU supports ANS=CONTINUE, subordinate PUs and LUs will be inactivated with the GIVEBACK flavor. Existing LU-LU sessions will remain active.
   - When the subordinate PUs have been inactivated the sessions supporting the DLUS-DLUR pipe will be broken.
   - Sessions with the DLUR which are not CPSVRMGR sessions will be left active. Examples include CP-CP, SNASVCMG, or user sessions.
   - When the command completes, the DLUR CDRSC will be in an ACTIVE state.

   Preventing the DLUR from coming back to this DLUS:

   In some cases, the DLUR may immediately try to reconnect to the DLUS which just performed the GIVEBACK. If this is not the desired result the DLUS can prevent the DLUR from opening the pipe again. This is handled by way of an additional switch on the VARY INACT. If FINAL=YES is added to the command VTAM will save an internal indicator that will prevent the DLUR from opening a CPSVMGR session with VTAM. Any attempt to establish a DLUS/DLUR CPSVRMGR session will be rejected with sense code 080A000D. The operator can enable the DLUR again by issuing a VARY ACT for the DLUR CDRSC.

TYPE=IMMED or TYPE=UNCOND

Means that the specified resource and applicable subordinate resources are to be deactivated **immediately**.

If TYPE=IMMED or TYPE=UNCOND, sessions involving the affected resources are disrupted. However, before completing the deactivation, VTAM waits for application programs being deactivated, or for application programs in session with resources being deactivated, to formally end their sessions (that is, issue CLSDST).

A TYPE=IMMED or TYPE=UNCOND operand can be specified on a VARY INACT command entered while a normal deactivation is in progress.

Notes:

1. TYPE=IMMED and TYPE=UNCOND have the same function. TYPE=UNCOND is consistent with the “VARY TERM command” on page 512.

TYPE=REACT

Means that the specified resource and applicable subordinate resources are to undergo deactivation and subsequent reactivation. This type of deactivation and reactivation might be advisable for resources that are not responding to VTAM commands, but that the operator wants to remain active. A forced reactivation instructs VTAM to deactivate its internal representations of the applicable resources and to send appropriate deactivation requests to the resources or their superior nodes, waiting for responses before beginning reactivation. If any of the resources still do not respond, a VARY INACT command with the TYPE=FORCE operand should be entered to force deactivation of those resources.

A device contained in a dynamic switched major node cannot be deactivated with TYPE=REACT. After such a PU is deactivated, it is no longer known to VTAM and cannot be reactivated with an operator command. Dynamic LUs under a dynamic PU can be deactivated and subsequently reactivated as long as their PU is not deactivated.

Notes:

1. Normally, sessions involving a REACT deactivated resource terminate as a result of this command, but there are exceptions. For example, if there is no CDRM-CDRM session with the owning SSCP of the session partner, or if the CDRM of a session partner is unknown because of takeover, those sessions are not terminated. These sessions also do not respond to reactivation, and are not displayed as activated in response to this command.

   If this command is issued for an NCP, the SSCP-PU session between VTAM and the NCP is disrupted. VTAM does not terminate any LU-LU sessions; they might or might not be disrupted, depending on what the NCP does for automatic network shutdown (ANS). LU-LU sessions involving type 2.1 PUs generally stay up.

   A second VARY INACT command with TYPE=REACT issued before the first one has time to complete has the same effect as specifying the TYPE=FORCE option.

   Any type of deactivation request (normal, immediate, or forced) can be entered while a forced reactivation is in progress if you want termination of the reactivation. As previously stated, forced deactivation might be the only effective deactivation method if a resource fails to respond to the forced reactivation.
2. If you specify REACT on this command for a dependent LU requester, the value is automatically promoted to FORCE.

VARY INOP command

```
►►──VARY NET,INOP──,ID=line_name──┬─────────────────┬──────────────────────────────►◄
                                  │ ,END=NO         │
                                  │ ,END=──┬─NO─┬   │
                                  │        └─YES┘   │
```

Abbreviations

Operand	Abbreviation
VARY	V
END=YES	END

When using an abbreviation in place of an operand, code the abbreviation exactly as shown in the table. For example, when coding the abbreviation for END=YES, code only END.

Purpose

You can use the VARY INOP command to terminate a manual dial operation if the VTAM operator is unable to complete the call.

A physical unit in a switched major node can be dialed either automatically or manually to establish a session with a logical unit. For manual dialing, VTAM issues a message containing the following information:

- The name of the line that VTAM will try to use to make the connection. The line must be a switched line with dial-out capability.
- The telephone number that the VTAM operator is to dial. This number is the number specified in the DIALNO operand of the appropriate PATH statement associated with the physical unit that the operator is dialing.

After receiving this information, the VTAM operator must try to make the connection by dialing the specified telephone number. If the operator is unable to complete the connection, the operator should enter the VARY INOP command either to ask VTAM to search for an alternate path or to ask VTAM to terminate the session request without a search for an alternate path.

Operands

END
Specifies whether VTAM is to search for an alternate line on which to send the session request.

END=NO
Searches for another appropriate line to the physical unit.

END=YES
Does not search for another appropriate line to the physical unit.

ID=line_name
Specifies the name of the line used to attempt the manual dial connection. This name is included in the VTAM message requesting manual dialing.

VARY LOGON command

```
►►──VARY NET──,LOGON=appl_name──,ID=slu_name──┬──────────────────────────────┬──►
                                              └──,LOGMODE=logon_mode_name────┘

►──┬──────┬──────────────────────────────────────────────────────────────────►◄
   └──,ACT─┘
```

Abbreviations

Operand	Abbreviation
VARY	V

Purpose

You can use the VARY LOGON command to change an existing automatic logon specification or to create an automatic logon specification. This command applies to any device-type logical unit, whether channel-attached or link-attached. Neither the device-type logical unit, which is the secondary LU, nor the primary LU receiving the automatic logon has to be active when the VARY LOGON command is issued.

Note: This command is restricted to the VTAM owning the SLU specified in the ID operand.

An automatic logon specification remains in effect until one of the following occurs:

- The primary logical unit controlling the secondary logical unit is changed with VARY LOGON or VARY ACT,LOGON command.
- A VARY NOLOGON command is entered for the secondary logical unit.

Note: If you use the VARY LOGON command to create or change an automatic logon specification, be aware that later use of a VARY ACT,UPDATE=ALL command for dynamic reconfiguration can undo the effects of the VARY LOGON command. This is because the LOGAPPL value in the definition file overrides the value that was established with the VARY LOGON command. Even if no LOGAPPL is coded in the definition file, VTAM assumes a null value for LOGAPPL and the null value overrides the VARY LOGON value. To prevent the automatic logon specification from being deleted unintentionally, code the LOGAPPL definition statement with the desired value.

Any automatic logon request made as a result of this specification might be accepted or rejected by the primary LU.

The VARY LOGON command specifies only a primary LU session partner for automatic logon (when the specified secondary LU becomes available for a session); it does not activate the secondary LU. To activate the secondary LU (or a resource to which the secondary LU is subordinate) and change the automatic logon specification at the same time, use the VARY ACT command with the LOGON operand (see the LOGON operand on the VARY ACT command on page 471 for more information).

For independent SLUs, the VARY LOGON command initiates a session with the controlling PLU only if there are no sessions already established with the specified PLU. Repeated use of the VARY LOGON command for the same LU and

controlling PLU establishes only a single session. A series of VARY LOGON commands for the same LU specifying different controlling PLUs establishes sessions between the LU and each of the controlling PLUs specified. The controlling PLU is the one specified in the last command. The other sessions are not automatically re-established after they terminate.

Note: When you enable automatic logons to TSO (either by using the VARY LOGON command or by specifying LOGAPPL=TSO in a definition statement), a new logon attempt is made when the user session ends, even if it ends in error. This is because it is not the session with TSO that is failing. If a loop occurs, for example message IKT029I being issued repeatedly, you can break the automatic logon relationship by issuing a VARY NOLOGON command. If you have a user-written application in your network called TSO, then enabling automatic logons to TSO could have unpredictable results.

Operands

ACT
Activates any subordinate resources within the scope of this command. If ACT is specified on the VARY LOGON command, other operands of the VARY ACT command are available. See Figure 6 on page 459 for the operands you can use. Use the LOGON column of that table to identify which resources are applicable.

ID=slu_name
Specifies the name of the secondary LU. This name can be one of the following:
- A device-type logical unit
- A resource with subordinate device-type logical units
- A boundary function CDRSC

If the value is a boundary function CDRSC, the boundary function CDRSC named must be known to VTAM at the time the command is issued. That is, it must have been predefined or dynamically defined because of another session. In addition, it must have a default ALS list.

Boundary function CDRSCs are only subordinate to the CDRSC major node where they were defined (ISTPDILU or ISTCDRDY). Boundary function CDRSCS are not subordinate to any device type major node (NCP, local SNA, etc.), nor to a line or PU, even if the independent LU was defined within or under these resources.

Because of this, independent LUs are not subordinate to any PU. Therefore, the sift-down to subordinate LUs does not affect independent LUs unless the ID value is a CDRSC major node.

The VARY LOGON command affects only LUs. If another resource type is specified, the logical units affected are those subordinate to the resource that is specified on this command.

The name can be a network-qualified name. If the name specified on the ID operand is network-qualified, this name is considered to be the real name of the resource.

LOGMODE=logon_mode_name
Specifies the name of the logon mode entry to be used for any logon initiated

for a logical unit as a result of this command. This logon mode name also becomes the logon mode name for all future automatic logons performed by VTAM for logical units within the scope of this command, and for their controlling primary LUs (if any).

LOGON can be specified without LOGMODE, but LOGMODE cannot be specified without LOGON. If LOGMODE is specified without the LOGON operand, LOGMODE is ignored and no error message is sent.

If LOGMODE is not specified, the LOGMODE value specified in any previous command applicable to a logical unit within the scope of this current VARY LOGON command is used. If no LOGMODE value was ever specified for a given logical unit within the scope of this command, the logical unit's default value is used.

LOGON=appl_name

Specifies the name of an application program (primary LU) to which any secondary LUs within the scope of this command are to be logged on. The application name can be network-qualified. If it is, the network identifier is considered to be real, but the resource name is considered to be generic (that is, the resource name can be either the real application name or a USERVAR name).

If the application name is an ACB name, and the ACB name matches the name on the APPL definition statement, then you can use a network-qualified ACB name.

If a USERVAR is found, VTAM resolves its name to the name of the VTAM application with which it is currently associated. If a USERVAR with this name is not found, VTAM searches for an application program with this name.

If the primary LU is an application program in this domain, the name must be that of an application program minor node within an active application program major node.

If the primary LU is a predefined CDRSC, the CDRSC must be active.

If the primary LU is a device-type LU, it must be attached to the same NCP as the secondary LU.

VARY NOLOGON command

```
►►──VARY NET──,NOLOGON=──┬─*──────────────┬──,ID=slu_name──────────────────────►◄
                         ├─cdrsc_name─────┤
                         ├─plu_name───────┤
                         └─uservar_name───┘
```

Abbreviations

Operand	Abbreviation
VARY	V

Purpose

Use the VARY NOLOGON command to delete an existing automatic logon specification that was established by the VARY LOGON command or the LOGAPPL operand on a definition statement. This command applies to any device-type logical unit, whether channel-attached or link-attached. The device-type logical unit does not have to be active when the VARY NOLOGON command is issued; however, the major node must be active.

The VARY NOLOGON command deletes any existing automatic logon specification for the named logical unit. When the command is issued, any active or pending sessions that resulted from an automatic logon specification will continue. When these sessions end, however, the logical unit will no longer have an automatic logon specification until a VARY LOGON is entered for it.

Note: If you use the VARY NOLOGON command to delete an automatic logon specification that was coded on the LOGAPPL operand of a definition statement, be aware that later use of a VARY ACT,UPDATE=ALL command for dynamic reconfiguration can undo the effects of the VARY NOLOGON command. This is because the LOGAPPL value in the definition file overrides the operator command. To prevent the automatic logon specification from being added back unintentionally, delete the LOGAPPL operand from the definition statement.

Operands

ID=slu_name

Specifies the name of the secondary LU. This name can be one of the following:

- A device-type logical unit
- A resource with subordinate device-type logical units
- A boundary function CDRSC

Boundary function CDRSCs are subordinate only to the CDRSC major node where they were defined (ISTPDILU or ISTCDRDY). Boundary function CDRSCS are not subordinate to any device type major node (NCP, local SNA, etc.), nor to a line or PU, even if the independent LU was defined within or under these resources.

Because of this, independent LUs are not subordinate to any PU. Therefore, the sift-down to subordinate LUs does not affect independent LUs unless the ID value is a CDRSC major node.

The VARY NOLOGON command affects only LUs. If another resource type is specified, the logical units affected are those subordinate to the resource specified on the command.

The name can be a network-qualified name. If *name* is an ACB name, and the ACB name matches the name on the APPL definition statement, then you can use a network-qualified ACB name. (See the description of the ID operand on the VARY ACT command for an example of how you can specify a network-qualified application name.)

NOLOGON
Specifies the scope of the VARY NOLOGON command. It can be a network-qualified name. The NOLOGON operand must specify the same name that was used on the LOGON operand or the LOGAPPL definition, with the following exception (because the host's network ID is assumed):

- In NETA, LOGON=NETA.CICS can be canceled by NOLOGON=NETA.CICS or NOLOGON=CICS
- In NETA, LOGON=CICS can be canceled by NOLOGON=NETA.CICS or NOLOGON=CICS

If the application name is an ACB name, and the ACB name matches the name on the APPL definition statement, then you can use a network-qualified ACB name. (See the description of the ID operand on the VARY ACT command for an example of how you can specify a network-qualified application name.)

NOLOGON=plu_name
Specifies that only logical units that are either:
- Identified by *slu_name* or
- Subordinate to *slu_name*

and have *plu_name* as their controlling PLU are to have their automatic logon specification deleted.

NOLOGON=cdrsc_name
Specifies the name of a CDRSC minor node within an active CDRSC major node. NOLOGON=*cdrsc_name* must be specified when the primary LU is an application program in another domain or another network.

NOLOGON=uservar_name
Specifies the name of a USERVAR that VTAM resolves to be the application with which it is currently associated. If a USERVAR with the specified name is not found, VTAM searches for an application program with that name.

NOLOGON=*
Specifies that all secondary logical units that are either:
- Identified by *slu_name* or
- Subordinate to *slu_name*

are to have their automatic logon specification deleted, regardless of which PLU is currently in control.

VARY PATH command

```
►►──VARY NET,PATH=──┬─NOUSE─┬──┬──────,GID=group_id─,ID=switched_major_node_name──┬──────►◄
                    └─USE───┘  └─,PID=path_id─,ID=switched_pu_name─────────────────┘
```

Abbreviations

Operand	Abbreviation
VARY	V

Purpose

Use this command to modify the availability of a dial-out path to a specific switched physical unit or a group of dial-out paths within a switched major node.

A physical unit in a switched major node can be dialed through one or more dial-out paths associated with the physical unit. Switched path control is initially established in a switched major node definition by the USE operand of the PATH statement associated with a physical unit. Unless USE=NO has been specified, the path is automatically enabled for use by VTAM when the physical unit is activated.

Note: The PATH statement referred to on this command description is in the switched major node definition; do not confuse it with the PATH statements used to define a path definition set.

Dial-out path usage can be altered by enabling or disabling:

- A single dial-out path to the physical unit (represented by a PID)
- A logical group of dial-out paths in the same switched major node (represented by a GID)

Operands

GID=group_id
Specifies the group identifier of the dial-out paths to be made usable or unusable. The group identifier is defined by the GID operand of the PATH statements in a switched major node definition. This value must be a decimal integer 1–255.

ID=name
Specifies the name of the switched major node (if the GID operand is specified) or the name of the physical unit in a switched major node (if the PID operand is specified) for which dial-out path status is to be changed.

PATH
Specifies the paths identified by the PID or GID operand to enable or disable.

PATH=USE
Specifies that one or more paths identified by the PID or GID operand are to be enabled (changed from unusable to usable), if they are not already enabled.

PATH=NOUSE
Specifies that one or more paths identified by the PID or GID operand are to be disabled (changed from usable to unusable), if they are not already

disabled. If the path is currently in use, PATH=NOUSE does not take effect until after the existing dial connection is broken.

PID=path_id

Specifies the path identifier of the dial-out path to be made usable or unusable. This value must be a decimal integer 1–255.

The path identifier is defined by the PID operand of a PATH statement. This PATH statement must be associated with the physical unit specified in the ID operand of this command. (This PATH statement is in the switched major node definition; do not confuse it with the PATH statements used to define a path definition set.)

VARY REL command

Release a previously acquired NCP:

```
►►──VARY NET,REL──,ID=ncp_name──┬──────────────────────────┬──┬──────────────────────────┬──►
                                │                          │  │ ┌─,CDLINK=ACT──────────┐ │
                                └─,OWNER=host_name─────────┘  └─,CDLINK=──┬─ACT───┬──────┘ │
                                                                          └─INACT─┘        │

►──┬──────────────────────────┬──────────────────────────────────────────────────────────►◄
   │ ┌─GIVEBACK─┐             │
   └─,TYPE=──┬──────────┬──────┘
             └─IMMED────┘
```

Release a PU:

```
►►──VARY NET,REL──,ID=pu_name──┬──────────────────────────┬──┬──────────────────────────┬──►
                               │                          │  │ ┌─,FINAL=NO────────────┐ │
                               └─,OWNER=host_name─────────┘  └─,FINAL=──┬─NO────┬──────┘ │
                                                                        └─YES───┘        │

►──┬──────────────────────────┬──────────────────────────────────────────────────────────►◄
   └─,TYPE=IMMED──────────────┘
```

Abbreviations

Operand	Abbreviation
VARY	V
FINAL=YES	FINAL
TYPE=GIVEBACK	G or GIVEBACK
TYPE=IMMED	I or IMMED

When using an abbreviation in place of an operand, code the abbreviation exactly as shown in the table. For example, when coding the abbreviation for TYPE=IMMED, code only I or IMMED. Do not code TYPE=I.

Purpose

Use the VARY REL (release) command to release a previously acquired NCP or to release a physical unit attached by a nonswitched line to an NCP (regardless of whether the physical unit was previously acquired).

The VARY REL command is usually applied to a previously acquired NCP or physical unit attached to an NCP as part of a backup and recovery procedure in a multiple-domain network. A physical unit attached to an NCP can also be released as part of a switched network backup procedure in either a single- or multiple-domain network. The purpose of the VARY REL command is to relinquish ownership of the following resources:

- NCP resources that are normally owned by another host (if the NCP was activated before being acquired)
- All resources within an NCP, including the NCP itself (if the NCP was acquired without having been previously activated)

- An individual physical unit and its logical units

Releasing resources within an NCP makes them unknown to VTAM until the NCP is reacquired, and any active traces for subordinate lines are deactivated; releasing a physical unit makes it unusable by the releasing host and makes its logical units unknown until the physical unit is reacquired. Releasing an NCP that had not been previously active also results in deactivation of the NCP. (Here there is no functional difference between the VARY REL and VARY INACT commands.)

As part of a switched network backup procedure for NCP resources, the VARY REL command can be entered for a physical unit that was not previously acquired. The purpose of the VARY REL command is to make the physical unit's logical units unknown to VTAM so that a corresponding switched physical unit definition (representing the same physical device with a different physical unit name but with the same logical unit names) can be activated.

Operands

CDLINK

Applies only to an NCP being released. It specifies whether any active cross-domain links and link stations are to remain active (in the NCP, not with respect to VTAM) after they are released. That is, the CDLINK operand specifies whether VTAM is to send deactivation requests to cross-domain links and link stations when the internal representations of these resources are deactivated as part of the VARY REL command processing.

For an NCP that was activated before being acquired, the CDLINK operand is ignored. The NCP remains active after the VARY REL command completes. Even though VTAM considers such links and link stations to be inactive, the NCP still considers them to be owned by VTAM. Therefore, specifying CDLINK=ACT in an environment of shared link and link station ownership might provide no benefits (because the shared ownership prevents traffic disruption on the link), but could cost the ability of an other host to become a shared owner (because the share count is one closer to its limit than it needs to be). It could also prevent the original host from acquiring and activating the link. See the *z/OS Communications Server: SNA Network Implementation Guide* for details of special considerations and cautions that might be applicable to deactivation of cross-domain links and link stations.

For an NCP acquired without having been previously activated, this option is effective only on the first command (whether VARY INACT or VARY REL) applied to the NCP. Any subsequent CDLINK specifications are ignored.

CDLINK=ACT

Specifies that active cross-domain links and link stations are to remain active after they are released, so that sessions routing information through the NCP over such links can continue without disruption.

CDLINK=INACT

Specifies that cross-domain links and link stations within the scope of the release are to be deactivated as part of the NCP release processing. Any session traffic over such links might be disrupted (depending on whether such links and link stations are also owned by some other host). See the *z/OS Communications Server: SNA Network Implementation Guide* for a discussion of how shared ownership affects the results of deactivating a link or link station.

FINAL
Specifies whether the physical unit specified on the ID operand will be reactivated.

FINAL=YES
Specifies that there are no immediate plans to reactivate the physical unit. The actual effects of this operand are device-dependent, and could include such functions as automatic power-off. See the appropriate component's document for the specific effects of a DACTPU type hex 01 command on a particular device. For physical units in a local SNA or switched major node, FINAL is meaningful only if the physical unit is fully active before deactivation begins.

FINAL=YES is ignored for type 2.1 physical units if ACTPU is not sent.

FINAL=NO
Specifies that there are plans to reactivate the physical unit.

ID=name
Specifies the name of the NCP or physical unit to be released.

OWNER=host_name
Specifies that the command is to apply only to resources defined with the OWNER operand, and whose owning SSCP matches the *host_name* specified in the command. *host_name* cannot be the name of the VTAM host from which you are issuing this command.

TYPE
Specifies the type of release. If neither GIVEBACK nor IMMED is specified, normal release occurs. Normal release does not break existing sessions, but does prevent the establishment of new sessions with nodes within the scope of this command.

TYPE=GIVEBACK
Applies only to an NCP and specifies that all subordinate resources that are capable of nondisruptive deactivation are to be released without disruption to existing LU-LU sessions.

Note: Because GIVEBACK is only supported at the line level, a normal release is performed for the following resources:

- Lines attached to this NCP that are not capable of nondisruptive deactivation
- PUs that are attached to a line that is not being released

TYPE=IMMED
Specifies immediate release. If you specify TYPE=IMMED, sessions involving the resources being released are disrupted.

You can specify TYPE=IMMED on a VARY REL command entered while a normal or giveback release is in progress.

VARY TERM command

```
                                                          ┌─,TYPE=UNCOND──────┐
►►─VARY NET,TERM──┬─,LU1=lu_name──┬──────────────┬──────┼──────────────────────►
                  │               └─,LU2=lu_name─┘      └─,TYPE=──┬─COND──┬─┘
                  ├─,LU2=lu_name──┬──────────────┤                │─FORCE─│
                  │               └─,LU1=lu_name─┘                └─UNCOND─┘
                  ├─,PLU=plu_name─┬──────────────┤
                  │               └─,SLU=slu_name─┘
                  ├─,SLU=slu_name─┬──────────────┤
                  │               └─,PLU=plu_name─┘
                  └─,SID=session_id──────────────┘

►─┬─,SCOPE=ACT──────┬─┬─,NOTIFY=YES──────┬─────────────────────────────────►◄
  │                  │ │                  │
  └─,SCOPE=──┬─ACT─┬─┘ └─,NOTIFY=──┬─NO──┬─┘
             │─ALL─│                └─YES─┘
             └─Q───┘
```

Abbreviations

Operand	Abbreviation
VARY	V

Purpose

The VARY TERM command terminates a session or group of sessions. The command can identify one or several of the following sessions for termination:

- A single session by its session identifier (SID)
- All of the sessions for which a specified logical unit is the primary session partner (PLU)
- All of the sessions for which a specified logical unit is the secondary session partner (SLU)
- All of the sessions between a specified pair of logical units having a specified primary/secondary relationship as session partners (PLU and SLU)
- All of the sessions for which a specified logical unit is a session partner, without regard to its primary or secondary status (LU1)
- All of the sessions between a specified pair of logical units, without regard to their primary/secondary relationship as session partners (LU1 and LU2)

You can use the “DISPLAY SESSIONS command” on page 183 to display the sessions that are to be terminated with this command. If a session is displayed with an “A-” session state, you cannot issue a VARY TERM command for it at this host. Instead, issue VARY TERM from one of the session end points.

VTAM overrides persistence and terminates the application and sessions normally.

Issuing a VARY TERM command to terminate the CP-CP session with an adjacent node might cause later session establishment requests to fail. To resolve the problem, reactivate the CP-CP session or else reactivate the link with CPCP=NO so that it will no longer be used in directed search routing.

Operands

LU1=lu_name
Identifies the logical unit whose sessions are to be terminated. If you also specify the LU2 operand, only sessions involving both specified logical units are terminated. LU1 can be either the primary LU or the secondary LU.

lu_name can be a network-qualified name. If the name is network-qualified, it is considered to be the real name of the resource. If a non-network-qualified name is specified, the name can be an ACB name, an alias name, or the real name of a local resource.

If a cross-network CDRSC is to be specified on the LU1 operand and the CDRSC is defined using NQNMODE=NQNAME (either by definition or start option), it must be specified as a network-qualifed name.

LU2=lu_name
Identifies the logical unit whose sessions are to be terminated. If you also specify the LU1 operand, only sessions involving both specified logical units are terminated. LU2 can be either the primary LU or the secondary LU.

lu_name can be a network-qualified name. If the name is network-qualified, it is considered to be the real name of the resource.

If a cross-network CDRSC is to be specified on the LU2 operand and the CDRSC is defined using NQNMODE=NQNAME (either by definition or start option), it must be specified as a network-qualifed name.

NOTIFY
Specifies whether VTAM is to send a notification message to the operator when all affected sessions have ended.

NOTIFY=YES
Sends a notification message to the operator when all affected sessions have ended.

NOTIFY=NO
Does not send a message when all affected sessions have ended.

PLU=plu_name
Identifies a primary logical unit. All sessions in which this logical unit functions as the primary session partner are terminated. If you also specify the SLU operand, only sessions involving both specified logical units in the specified primary/secondary relationship are terminated.

The value for *plu_name* can be a network-qualified name. If the name is network-qualified, it is considered to be the real name of the resource. If a network-qualified name is not specified, the default network identifier will be from the network where the command was issued.

If a cross-network CDRSC is to be specified on the PLU operand and the CDRSC is defined using NQNMODE=NQNAME (either by definition or start option), it must be specified as a network-qualifed name.

SCOPE
Specifies the scope of the command.

SCOPE=ACT
Terminates only active sessions.

Note that the termination of an active session between a device-type logical unit and its controlling primary LU terminates the session (unless the session is terminated using TYPE=FORCE) but does not alter the basic controller relationship between them.

Deactivation and reactivation of the logical unit (including error recovery procedures), or use of the logical unit by another primary LU, results in the re-establishment of the logical unit's session with its controlling application program. If this is not the case, the controller session can be re-established with a VARY LOGON command or by a specific session request from the primary LU.

SCOPE=ALL
Terminates all sessions, whether active or queued.

SCOPE=Q
Terminates only queued sessions.

Note that the termination of a queued session between a device-type logical unit and its controlling primary LU does not alter the basic controller relationship between them.

SID=sessionid
Identifies the VTAM session to terminate. You can display the session ID by issuing the DISPLAY ID,SCOPE=ALL command. The application program can be in either this domain (application program minor node) or another domain (CDRSC minor node). The session ID must be a valid hex number.

SLU=slu_name
Identifies a secondary logical unit. All sessions in which this logical unit functions as the secondary session partner are terminated. If you specify the PLU operand, only sessions involving both specified logical units in the specified primary/secondary relationship are terminated.

slu_name can be a network-qualified name. If the name is network-qualified, it is considered to be the real name of the resource.

If a cross-network CDRSC is to be specified on the SLU operand and the CDRSC is defined using NQNMODE=NQNAME (either by definition or start option), it must be specified as a network-qualifed name.

TYPE
Specifies the type of session termination to be performed. If this command applies to queued sessions, they are terminated. This command will terminate only the primary session between the PLU and SLU; the backup session will not terminate.

Notes:

1. To avoid re-driving the session for an automatic logon relationship, issue VARY TERM,TYPE=COND, or VARY TERM,TYPE=UNCOND.
2. For a phantom session (an active session for which no SIB exists in this host), issue V NET,TERM,TYPE=UNCOND or V NET,TERM,TYPE=FORCE to terminate the session.
3. If the VARY TERM command is issued in the SLU's host after takeover has occurred and the PLU for the session resides in another host, the session might terminate properly. In that case, the VARY TERM command should be issued from the host where the PLU resides.
4. For a CP-CP session, TYPE=COND or UNCOND is converted by VTAM to TYPE=FORCE. The session will **not** be automatically re-established even if other CP-CP session-capable connections are subsequently activated. If

you want to reactivate the session, issue a VARY ACT,ID=*adjacent_cp*,IDTYPE=CP command.

5. For a CPSVRMGR session between a DLUR and a DLUS, TYPE=COND or UNCOND is converted to FORCE. If the DLUR allows ANS=CONTINUE, VTAM performs GIVEBACK for PUs supported by the DLUR, and current LU-LU sessions are not disrupted because the LUs become shadow resources.

TYPE=COND
Specifies conditional termination.

Note: This command is rejected if the termination request is for a session with an unknown partner.

If this command applies to active sessions, they might be disrupted. PLUs involved in such sessions are notified of the operator's request for termination and have the option to terminate the session.

If the PLU is an independent LU, the session remains active because independent LUs cannot perform orderly termination. If the session remains active, it is marked "session end pending" in each SSCP that knows of the termination request.

TYPE=FORCE
Specifies forced termination. If this command applies to active sessions, they are disrupted, and application programs involved in such sessions are notified of the disruption.

If a controlling relationship is set up for the logical unit, the session re-drives because the termination was of an abnormal type.

TYPE=UNCOND
Specifies unconditional termination.

If this command applies to active sessions, they are disrupted. PLUs involved in such sessions are notified of the disruption.

Chapter 3. Logon manager operator commands

The logon manager permits a terminal user to pass through VTAM and log on to an independent application running on a transaction processing facility (TPF). More specifically, it allows a dependent secondary logical unit (SLU) to initiate a session with an independent primary logical unit (PLU).

Note: The logon manager is a VTAM application. Any similarity between VTAM commands and logon manager commands is coincidental.

This chapter is a reference to the logon manager operator commands. It includes a description of each command's format and applicable operands. The descriptions are arranged alphabetically by command name.

Command fundamentals

A logon manager operator command consists of:

- The command name or its abbreviation
- A procedure name, referred to as a *procname* in the command syntax, that tells the operating system to send the command to the logon manager for processing. The *procname* must be the same as the *procname* specified in the logon manager START command.

  Note: The logon manager procedure name is not VTAM.
- Operands that describe the operation to be performed.

Syntax notation

See Appendix B, "How to read the syntax diagrams" on page 535 for details on the operator command syntax notation.

Entering operator commands

Logon manager operator commands are entered and logon manager messages are received at the system console or remote network console. Logon manager commands cannot exceed 80 characters and must be entered on a single input line from whatever input device is being used.

Using MVS system symbols

You can use the following MVS system symbols in the values you specify on TPF logon manager operator commands:

&SYSCLONE
Represents a 1–2-character shorthand notation for the name of the system

&SYSNAME
Represents a 1–8-character system name

&SYSPLEX
Represents a 1–8-character sysplex name

&SYSR1
Represents a 1–6-character sysres volume

&installation-defined system symbol
Represents a 1–8-character identifier. You can define this symbol to be any identifier you want.

© Copyright IBM Corp. 1984, 2002

The substitution text for these system symbols is defined in MVS and is substituted by MVS in place of the symbols when commands are processed. Refer to *z/OS MVS Initialization and Tuning Reference* for information about how to define the symbols in MVS.

MVS system symbols can be used to eliminate the need to know the exact name of a resource on the system from which a command is issued.

Correct and incorrect commands

The logon manager issues messages indicating whether commands are accepted or rejected.

When a command is entered with correct syntax and valid operands, the logon manager issues a message of acknowledgement. Note, however, that the acknowledgement of a command does not imply that the command will complete.

If the command contains a syntax error or incorrect operands, the logon manager issues one or more error messages and rejects the command.

MODIFY HELP command

```
►►──MODIFY procname,HELP──────────────────────────────────────────────►◄
```

Abbreviations

Operand	Abbreviation
MODIFY	F

Purpose

The MODIFY HELP command displays the syntax and a brief description of each logon manager command.

Operands

procname
Must be the same as the *procname* specified in the logon manager START command.

HELP
Displays logon manager help information.

Examples

Displaying logon manager help:

```
modify elmngr,help
ELM022I HELP REQUEST ACCEPTED
ELM023I VALID COMMAND PARAMETERS ARE:
ELM024I HELP              ...GET VALID COMMAND FORMATS
ELM025I INFO,ID=NNNNNNNN  ...GET STATUS FOR RESOURCE NAMED NNNNNNNN
ELM0261 INFO,ID=CLU       ...GET STATUS FOR EACH CONTROL LOGICAL UNIT
ELM027I INFO,ID=CLU,PEND  ...GET STATUS FOR EACH PENDING CLU
ELM028I INFO,ID=APPL      ...GET STATUS FOR EACH SUPPORTED APPLICATION
ELM029I INFO,ID=APPL,PEND ...GET STATUS FOR EACH PENDING APPL
ELM030I INFO,ID=ALL       ...GET STATUS FOR EACH CLU AND APPL
ELM031I INFO,ID=ALL,PEND  ...GET STATUS FOR EACH PENDING CLU AND APPL
ELM032I MEMBER=MMMMMMM    ...PROCESS DEFINITION MEMBER MMMMMMMM
ELM033I MINLINK=VVV,ID=ALL...SET MINLINK VALUE TO VVV (1 - 255)
ELM034I                       FOR EACH SUPPORTED APPLICATION
ELM035I MINLINK=VVV,ID=NNNNNNNN... SET MINLINK VALUE FOR APPL NNNNNNNN
ELM036I STOP              ...REQUESTS CLOSEDOWN
```

MODIFY INFO command

```
►►──MODIFY procname,INFO──,ID=─┬─name──┬─┬──────────┬──────────────────────────►◄
                               ├─APPL──┤ └─,PEND────┘
                               ├─CLU───┤
                               └─ALL───┘
```

Abbreviations

Operand	Abbreviation
MODIFY	F

Purpose

The MODIFY INFO command displays information about logon manager resources.

Operands

procname
Must be the same as the *procname* specified in the logon manager START command.

ID Identifies the resource or resources to include in the display.

ID=name
Displays only the named resource.

ID=APPL
Displays only logon manager TPF applications.

ID=CLU
Displays only channel-attached control point LUs.

ID=ALL
Displays both logon manager TPF applications and channel-attached control point LUs.

PEND
Displays only resources with a status of pending (that is, resources in the process of being activated or deactivated).

If ID=*name*, displays the named resource only if the resource is in a pending state.

If ID=APPL, displays each logon manager application in a pending state.

If ID=CLU, displays each channel-attached control point LU in a pending state.

If ID=ALL, displays each logon manager application and each channel-attached control point LU in a pending state.

Resulting display

The resulting display shows:
- The resource name
- The resource session status (active, inactive, or pending)
- The reason code for the resource, if appropriate
- The number of session initiation requests sent to the resource

Examples

Displaying a specific logon manager resource:

```
modify elmngr,info,id=trapl
ELM014I NAME:  TYP:  STATUS:   CURRENT:   CONTROL:   REASON: INITS:
ELM040I TRAPL  CLU   ACTIVE    SESCNT=19  SESLMT=32          0
```

Displaying pending logon manager TPF applications:

```
modify elmngr,info,id=appl,pend
ELM014I NAME:  TYP:  STATUS:   CURRENT:   CONTROL:   REASON: INITS:
ELM040I RES    APPL  PENDACTV  LNKCNT=5   MINLINK=1  OPNOST  0
ELM040I FIN    APPL  PENDINAC  LNKCNT=4   MINLINK=2  LOSTERM 22
```

Displaying logon manager channel-attached control point LUs:

```
modify elmngr,info,id=clu
ELM014I NAME:  TYP:  STATUS:   CURRENT:   CONTROL:   REASON: INITS:
ELM040I TRAPL  CLU   ACTIVE    SESCNT=0   SESLMT=0           0
```

Displaying all logon manager resources:

```
modify elmngr,info,id=all
ELM014I NAME:  TYP:  STATUS:   CURRENT:   CONTROL:   REASON: INITS:
ELM040I RES    APPL  INACTIVE  LNKCNT=0   MINLINK=1          0
ELM040I FIN    APPL  INACTIVE  LNKCNT=0   MINLINK=2          0
ELM040I TEST1  APPL  INACTIVE  LNKCNT=0   MINLINK=1          0
ELM040I TEST2  APPL  INACTIVE  LNKCNT=0   MINLINK=1          0
```

MODIFY MEMBER command

```
►►──MODIFY procname,MEMBER=member_name──────────────────────────────────►◄
```

Abbreviations

Operand	Abbreviation
MODIFY	F

Purpose

The MODIFY MEMBER command redefines the network configuration known to the logon manager. If the system programmer has modified the specified member, this command implements the changes by rebuilding the logon manager control blocks using the new definitions.

Operands

procname
Must be the same as the *procname* specified in the logon manager START command.

MEMBER=member_name
Identifies the member of the ELMDEFDS file to read.

MODIFY MINLINK command

```
►►──MODIFY procname,MINLINK=number_of_lus──,ID=──┬─appl_name─┬──────────────────►◄
                                                 └─ALL───────┘
```

Abbreviations

Operand	Abbreviation
MODIFY	F

Purpose

The MODIFY MINLINK command changes the minimum number of supporting channel-attached, control-point logical units that the logon manager requires before allowing the TPF application to enter into a session.

Operands

procname
Must be the same as the *procname* specified in the logon manager START command.

ID Specifies whether to change the number of required links for one TPF application or for all applications.

ID=appl_name
Identifies the application for which the number of required links is to change.

ID=ALL
Specifies that the minimum number of required links should change for all applications.

MINLINK=number_of_lus
Specifies the minimum number of supporting channel-attached, control-point logical units that the logon manager requires before allowing the TPF application to enter into a session. Specify a decimal integer 1–255.

MODIFY STOP command

```
►►──MODIFY procname,STOP──────────────────────────────────────────►◄
```

Abbreviations

Operand	Abbreviation
MODIFY	F

Purpose

The MODIFY STOP command terminates a logon manager session. When this command is issued, the logon manager shuts down its ACBs, and returns control to MVS.

Operands

procname
Must be the same as the *procname* specified in the logon manager START command.

STOP
Terminates the logon manager. Although all active sessions continue until completion, the logon manager denies any requests to initiate new sessions. When all active sessions end, the logon manager terminates.

The VTAM operator commands HALT, HALT QUICK, and HALT CANCEL also can be used to terminate a logon manager session. The effect of these commands on the logon manager is the same as their effect on any VTAM application.

START command

```
►►──START procname──────────────────────────────────────────────────►◄
```

Abbreviations

Operand	Abbreviation
START	S

Purpose

The START command starts the logon manager. Enter this command from either the master console or a secondary system console.

The system programmer supplies logon manager start options in the JCL used to start the logon manager. If the options are not supplied, VTAM prompts the operator for the required options.

Operands

procname

The name of the MVS procedure containing the JCL necessary to start the logon manager.

This *procname* must be used for all logon manager commands.

Appendix A. Cross-reference for VTAM DISPLAY commands

This appendix is supplied to help you determine which DISPLAY command to use to locate a specific piece of information. The list of DISPLAY command output is not exhaustive, but it does contain the most widely used output.

The DISPLAY commands are listed across the top of the table with the information in the output examples located down the left side of the table. To determine which DISPLAY command displays a given piece of information, locate the information on the left side and read across to find a large dot. A dot indicates that the command provides the requested piece of information. More than one dot indicates that more than one DISPLAY command displays the requested piece of information.

An example of the usage for this table would be if you want to display an access method control block name (ACB name). First you would locate “ACB name” on the left side of the table. Next, read across the table and identify the columns where there are dots. In this case, this information can be displayed by three different DISPLAY commands: APPLS, ID, and PENDING. Refer to the specific DISPLAY command in Chapter 2, “VTAM operator commands” on page 9, for details on how to display a particular piece of information using a command.

© Copyright IBM Corp. 1984, 2002

Cross-reference for DISPLAY commands

DISPLAY Command Output	ADJCLUST	ADJCP	ADJSSCPS	APING	APINGDTP	APPLS	APPNTOSA	BFRUSE	BNCOSMAP	CDRMS	CDRSCS	CLSTRS	CNOS	CONVID	COS	CPCP	CSM	DIRECTRY	DISK	DLURS	EXIT	GRAFFIN	GROUPS	ID	LINES	LMTBL	LUGROUPS
Access method control block (ACB name)						●																		●			
Active sessions																								●			
Adjacent cluster table definitions	●																										
Adjacent CP		●																						●			
Adjacent SSCP tables			●																								
Adjacent subarea address																								●			
Adjacent subarea node				●																				●			
APINGD instance limit					●																						
Application program						●					●																
Application program name													●	●										●		●	
APPN class-of-service															●												
APPN class-of-service table															●												
APPN directory database																		●									
APPN route information				●																				●			
Buffer pool data								●																			
Buffer trace																								●			
Buffer usage								●																			
CDRM																											
CDRM for a CDRSC																											
Channel-attached links										●														●	●		
Channel unit address (CUA)											●													●	●		
Checkpoint date and time																											
Class-of-service mapping							●		●																		
Class-of-service name				●																							
Class-of-service (COS) table															●												
Clusters												●															
Common service area (CSA) buffers								●																			
Communication scanner processor (CSP)																											
Conversation ID (CONVID)														●													
CP - CP session information		●														●								●			
Cross-domain resource (CDRSCS)											●													●			
Current transmission group (CTG)																								●			
Data compression																											
Data space usage																											
Dependent LU requester																				●							
Destination node				●																							
Destination subarea address																											
Dump name																			●								
Dump procedure address																								●			
Dynamic CDRSC suppport																								●			
Elapse time (ETIME)														●													
Element address										●														●			
Exit routines																					●						
Expansion limit								●																			
Explicit route length																											
Explicit route (ER) number				●																							

Figure 9. DISPLAY output cross reference (A-E) (Part 1 of 2)

DISPLAY Command Output	MAJNODES	MODELS	NCPSTOR	NETSRVR	PATHS	PATHTAB	PENDING	ROUTE	RSCLIST	RTPS	SAMAP	SATOAPPN	SESSIONS	SNSFILTR	SRCHINFO	STATIONS	STATS	STORUSE	TABLE	TERMS	TGPS	TNSTAT	TOPO	TRACES	TRL	TSOUSER	USERVAR	VTAMOPTS	VTAMSTOR
Access method control block (ACB name)							●																						
Active sessions													●																
Adjacent cluster table of definitions																													
Adjacent CP																													
Adjacent SSCP tables																													
Adjacent subarea address						●		●																					
Adjacent subarea node																													
APINGD instance limit																													
Application program							●		●																				
Application program name																										●	●		
APPN class-of-service																													
APPN class-of-service table																													
APPN directory database																													
APPN route information										●																			
Buffer pool data																													
Buffer trace																								●					
Buffer usage																													
CDRM									●																				
CDRM for a CDRSC																													
Channel-attached links																													
Channel unit address (CUA)																							●						
Checkpoint date and time												●																	
Class-of-service mapping																													
Class-of-service name								●																					
Class-of-service (COS) table													●																
Clusters							●		●																				
Common service area (CSA) buffers																													
Communication scanner processor (CSP)																													
Conversation ID (CONVID)																													
CP-CP session information																							●						
Cross-domain resource (CDRSCS)									●																				
Current transmission group (CTG)																													
Data compression																	●												
Data space usage																		●											
Dependent LU requester																													
Destination node																							●						
Destination subarea address						●		●																					
Dump name																													
Dump procedure address																													
Dynamic CDRSC support																													
Elapse time (ETIME)																													
Element address																													
Exit routines																													
Expansion limit																													
Explicit route length)					●																								
Explicit route (ER) number						●		●																					

Figure 9. DISPLAY output cross reference (A-E) (Part 2 of 2)

DISPLAY Command Output	ADJCLUST	ADJCP	ADJSSCPS	APING	APINGDTP	APPLS	APPNTOSA	BFRUSE	BNCOSMAP	CDRMS	CDRSCS	CLSTRS	CNOS	CONVID	COS	CPCP	CSM	DIRESTRY	DISK	DLURS	EXIT	GRAFFIN	GROUPS	ID	LINES	LMTBL	LUGROUPS
Generalized PIU trace (GPT)																								●			
Generalized TG (GTG)																								●			
Generic Resource information																						●					
Group identifier (GID)																											
HPR Route Test																											
I/O traces																											
IP address																								●			
Independent LUs											●													●			
Intermediate routing node buffers								●																			
Intermediate routing node trace																											
Job name																								●			
Line Group																								●			
Line name																								●			
Line trace																								●			
Line type																								●			
Lines/links																								●			
Link station																								●			
Load module name																											
Load procedure status																			●								
Logical unit (LU)																								●			
Logical unit name (LUNAME)											●													●			
Logon mode name				●		●							●	●												●	
Major node name		●											●	●												●	
Major node data										●		●			●								●	●			●
Major node subordinate resources																								●			
Minor node data																								●			●
Minor node subordinate resources																								●			
Model LUs																								●			
Model PUs																											●
Negpoll (negative response polling)																											
Network control program (NCP)																								●			
Network ID			●																●					●			
Network node servers										●	●				●												
Node characteristics																											
Node type		●																									
Origin node				●																				●			
Owned TGs																											
Paths, switched																											

Figure 10. DISPLAY output cross reference (G-P) (Part 1 of 2)

DISPLAY Command Output	MAJNODES	MODELS	NCPSTOR	NETSRVR	PATHS	PATHTAB	PENDING	ROUTE	RSCLIST	RTPS	SAMAP	SATOAPPN	SESSIONS	SNSFILTR	SRCHINFO	STATIONS	STATS	STORUSE	TABLE	TERMS	TGPS	TNSTAT	TOPO	TRACES	TRL	TSOUSER	USERVAR	VTAMOPTS	VTAMSTOR
Generalized PIU trace (GPT)																							●						
Generated TG (GTG)																													
Generic Resource information										●																			
Group identifier (GID)					●																								
HPR route test										●																			
I/O traces																							●						
IP address					●																						●		
Independent LUs																													
Intermediate routing node buffers																													
Intermediate routing node trace																													
Job name																													
Line group									●																				
Line name									●										●										
Line trace																							●						
Line type																													
Lines/links					●		●																						
Link station															●														
Load module name																													
Load procedure status																													
Logical unit (LU)							●		●										●										
Logical unit name (LUNAME)																													
Logon mode name																													
Major node name	●	●							●						●				●										
Major node data																													
Major node subordinate resources		●																											
Minor node data																													
Minor node subordinate resources																													
Model LUs		●																											
Model PUs		●																											
Negpoll (negative response polling)																													
Network control program (NCP)			●				●																						
Network ID								●	●						●														
Network node servers				●																									
Node characteristics																					●								
Node type																					●								
Origin node								●													●								
Owned TGs																					●								
Paths, switched					●																								

Figure 10. DISPLAY output cross reference (G-P) (Part 2 of 2)

Cross-reference for DISPLAY commands

DISPLAY Command Output	DISPLAY Command																									
	ADJCLUST	ADJCP	ADJSSCPS	APING	APINGDTP	APPLS	APPNTOSA	BFRUSE	BNCOSMAP	CDRMS	CDRSCS	CLSTRS	CNOS	CONVID	COS	CPCP	CSM	DIRECTRY	DISK	DLURS	EXIT	GRAFFIN	GROUPS	ID	LINES	LMTBL	LUGROUPS
Path identifier (PID)																											
Physical unit (PU)												●												●			
Physical unit name																											
Primary LU																								●			
RTP infortmation																											
Resource use count																											
SAW sense filter																											
Scanner interface trace (SIT)																								●			
Search requests																											
Secondary LU																								●			
Session ID				●										●										●			
Session limit																								●			
Sessions																								●			
SIO count																								●			
Start options																											
Stepname																								●			
Storage						●											●										
Subarea address										●														●			
Subarea mapping table																											
Table name																											
Table type																											
TCP job name																								●			
Telephone number																											
Transmission data rate				●																							
Transmission group data		●		●																				●			
Transmission priority (TP)																								●			
Transport resource list entry																								●			
TSO trace																											
TSO user ID																											
USERVAR class																											
USERVAR name																											
USERVAR type																											
VCNS user						●																			●		
Virtual route number				●																				●			
VTAM internal trace																											
VTAM segment type						●																					
Weight of node or TG																											

Figure 11. DISPLAY output cross reference (P-W) (Part 1 of 2)

DISPLAY Command Output	DISPLAY Command																											
	MAJNODES	MODELS	NCPSTOR	NETSRVR	PATHS	PATHTAB	PENDING	ROUTE	RSCLIST	RTPS	SAMAP	SATOAPPN	SESSIONS	SNSFILTR	SRCHINFO	STATIONS	STATS	STORUSE	TABLE	TERMS	TGPS	TNSTAT	TOPO	TRACES	TRL	TSOUSER	USERVAR	VTAMOPTS	VTAMSTOR
Path identifier (PID)					●																								
Physical unit (PU)							●		●											●									
Physical unit name																								●					
Primary LU													●																
Resource use count																			●										
RTP information										●				●															
SAW sense filter																													
Scanner interface trace (SIT)																								●					
Search requests															●														
Secondary LU													●																
Session ID													●																
Session limit																													
Sessions													●																
SIO count																													
Start options																											●		
Stepname																													
Storage			●														●	●											●
Subarea address																●													
Subarea mapping table										●																			
Table name																			●										
Table type																			●										
TCP job name																												●	
Telephone number					●																								
Transmission data rate																													
Transmission group data						●		●													●								
Transmission priority (TP)								●																					
Transport resource list entry																									●				
TSO trace																								●		●			
TSO user ID																										●			
Tuning statistics information																						●							
USERVAR class																											●		
USERVAR name																											●		
USERVAR type																											●		
VCNS user	●																												
Virtual route number						●		●																					
VTAM internal trace																								●					
VTAM segment type					●																								
Weight of node or TG																							●						

Figure 11. DISPLAY output cross reference (P-W) (Part 2 of 2)

Appendix B. How to read the syntax diagrams

This syntax information applies to all commands and statements included in this publication that do not have their own syntax described elsewhere in this publication. This section describes how to read the syntax diagrams used in this book.

- Read the diagrams from left-to-right, top-to-bottom, following the main path line. Each diagram begins on the left with double arrowheads (►►) and ends on the right with two arrowheads facing each other (►◄).

```
►►─┤ Syntax Diagram ├──────────────────────────────────────────►◄
```

- If a diagram is longer than one line, the first line ends with a single arrowhead (►) and the second line begins with a single arrowhead.

```
►►─┤ First Line ├─OPERAND1──OPERAND2──OPERAND3──OPERAND4──OPERAND5──────────►
►─┤ Second Line ├──────────────────────────────────────────────────────►◄
```

- Required operands and values appear on the main path line.

```
►►─REQUIRED_OPERAND──────────────────────────────────────────────────►◄
```

  You must code required operands and values.
  If there is more than one mutually exclusive required operand or value to choose from, they are stacked vertically in alphanumeric order.

```
►►─┬─REQUIRED_OPERAND_OR_VALUE_1─┬──────────────────────────────────►◄
   └─REQUIRED_OPERAND_OR_VALUE_2─┘
```

- Optional operands and values appear below the main path line.

```
►►─┬──────────────┬──────────────────────────────────────────────────►◄
   └─OPERAND──────┘
```

  You can choose not to code optional operands and values.
  If there is more than one mutually exclusive optional operand or value to choose from, they are stacked vertically in alphanumeric order below the main path line.

```
►►─┬──────────────────────────────┬──────────────────────────────────►◄
   ├─OPERAND_OR_VALUE_1───────────┤
   └─OPERAND_OR_VALUE_2───────────┘
```

- An arrow returning to the left above an operand or value on the main path line means that the operand or value can be repeated. The comma means that each operand or value must be separated from the next by a comma.

```
      ┌─,──────────────────┐
      ▼                    │
►►────┴─REPEATABLE_OPERAND─┴──────────────────────────────────────────►◄
```

- An arrow returning to the left above a group of operands or values means more than one can be selected, or a single one can be repeated.

© Copyright IBM Corp. 1984, 2002

```
►►──┬──────────────────────────────────────────────────────────────────────────────────────┬──►◄
    │   ┌─,──────────────────────────────────────────────────────────────────────────────┐ │
    │   ▼                                                                                │ │
    └───┬─REPEATABLE_OPERAND_OR_VALUE_1─┬──────────────────────────────────────────────┘ │
        └─REPEATABLE_OPERAND_OR_VALUE_2─┘                                                  │
```

- A word in all uppercase is an operand or value you must spell exactly as shown. In this example, you must code ***OPERAND***.

  Note: VTAM and IP commands are not case sensitive. You can code them in uppercase or lowercase. If the operand is coded in both uppercase and lowercase, the uppercase portion is the abbreviation (for example, OPERand).

```
►►──OPERAND──────────────────────────────────────────────────────────────────────────────►◄
```

  If an operand or value can be abbreviated, the abbreviation is discussed in the text associated with the syntax diagram.
- If a diagram shows a character that is not alphanumeric (such as parentheses, periods, commas, and equal signs), you must code the character as part of the syntax. In this example, you must code ***OPERAND=(001,0.001)***.

```
►►──OPERAND=(001,0.001)──────────────────────────────────────────────────────────────────►◄
```

- If a diagram shows a blank space, you must code the blank space as part of the syntax. In this example, you must code ***OPERAND=(001 FIXED)***.

```
►►──OPERAND=(001 FIXED)──────────────────────────────────────────────────────────────────►◄
```

- Default operands and values appear above the main path line. VTAM uses the default if you omit the operand entirely.

```
    ┌─DEFAULT─┐
►►──┤         ├──────────────────────────────────────────────────────────────────────────►◄
    └─OPERAND─┘
```

- A word in all lowercase italics is a *variable*. Where you see a variable in the syntax, you must replace it with one of its allowable names or values, as defined in the text.

```
►►──variable─────────────────────────────────────────────────────────────────────────────►◄
```

- References to syntax notes appear as numbers enclosed in parentheses above the line. Do not code the parentheses or the number.

```
            (1)
►►──OPERAND──────────────────────────────────────────────────────────────────────────────►◄
```

  Notes:

  1 An example of a syntax note.
- Some diagrams contain *syntax fragments*, which serve to break up diagrams that are too long, too complex, or too repetitious. Syntax fragment names are in

mixed case and are shown in the diagram and in the heading of the fragment. The fragment is placed below the main diagram.

```
►►─┤ Reference to Syntax Fragment ├──────────────────────────────────►◄
```

Syntax Fragment:

```
├──1ST_OPERAND,2ND_OPERAND,3RD_OPERAND──────────────────────────────┤
```

Appendix C. Architectural specifications

This appendix lists documents that provide architectural specifications for the SNA Protocol.

The APPN Implementers' Workshop (AIW) architecture documentation includes the following architectural specifications for SNA APPN and HPR:

- APPN Architecture Reference (SG30-3422-04)
- APPN Branch Extender Architecture Reference Version 1.1
- APPN Dependent LU Requester Architecture Reference Version 1.5
- APPN Extended Border Node Architecture Reference Version 1.0
- APPN High Performance Routing Architecture Reference Version 4.0
- SNA Formats (GA27-3136-19)
- SNA Technical Overview (GC30-3073-04)

For more information, refer to the AIW documentation page at http://nhdidd.raleigh.ibm.com/app/aiwdoc.htm.

The following RFC also contains SNA architectural specifications:

- RFC 2353 *APPN/HPR in IP Networks APPN Implementers' Workshop Closed Pages Document*

RFCs can be obtained from:

Government Systems, Inc.
Attn: Network Information Center
14200 Park Meadow Drive
Suite 200
Chantilly, VA 22021

Many RFCs are available online. Hardcopies of all RFCs are available from the NIC, either individually or by subscription. Online copies are available using FTP from the NIC at http://www.rfc-editor.org/rfc.html.

Use FTP to download the files, using the following format:

```
RFC:RFC-INDEX.TXT
RFC:RFCnnnn.TXT
RFC:RFCnnnn.PS
```

where:

- *nnnn* is the RFC number.
- TXT is the text format.
- PS is the postscript format.

You can also request RFCs through electronic mail, from the automated NIC mail server, by sending a message to `service@nic.ddn.mil` with a subject line of `RFC` *`nnnn`* for text versions or a subject line of `RFC` *`nnnn`*`.PS` for PostScript versions. To request a copy of the RFC index, send a message with a subject line of `RFC INDEX`.

For more information, contact `nic@nic.ddn.mil`.

© Copyright IBM Corp. 1984, 2002

Appendix D. Information APARs

This appendix lists information APARs for IP and SNA documents.

Notes:

1. Information APARs contain updates to previous editions of the manuals listed below. Documents updated for V1R4 are complete except for the updates contained in the information APARs that may be issued after V1R4 documents went to press.
2. Information APARs are predefined for z/OS V1R4 Communications Server and may not contain updates.
3. Information APARs for OS/390 documents are in the document called *OS/390 DOC APAR and PTF ++HOLD Documentation*, which can be found at http://publibz.boulder.ibm.com/cgi-bin/bookmgr_OS390/BOOKS/IDDOCMST/CCONTENTS.
4. Information APARs for z/OS documents are in the document called *z/OS and z/OS.e DOC APAR and PTF ++HOLD Documentation*, which can be found at http://publibz.boulder.ibm.com:80/cgi-bin/bookmgr_OS390/BOOKS/ZIDOCMST/CCONTENTS.

Information APARs for IP documents

Table 15 lists information APARs for IP documents.

Table 15. IP information APARs

Title	z/OS CS V1R4	z/OS CS V1R2	CS for OS/390 2.10 and z/OS CS V1R1	CS for OS/390 2.8
IP API Guide	ii13255	ii12861	ii12371	ii11635
IP CICS Sockets Guide	ii13257	ii12862		ii11626
IP Configuration				ii11620 ii12068 ii12353 ii12649 ii13018
IP Configuration Guide	ii13244	ii12498 ii13087	ii12362 ii12493 ii13006	
IP Configuration Reference	ii13245	ii12499	ii12363 ii12494 ii12712	
IP Diagnosis	ii13249	ii12503	ii12366 ii12495	ii11628
IP Messages Volume 1	ii13250	ii12857 ii13229	ii12367	ii11630 13230
IP Messages Volume 2	ii13251	ii12858	ii12368	ii11631
IP Messages Volume 3	ii13252	ii12859	ii12369 12990	ii11632 ii12883
IP Messages Volume 4	ii13253	ii12860		
IP Migration	ii13242	ii12497	ii12361	ii11618

© Copyright IBM Corp. 1984, 2002

Table 15. IP information APARs (continued)

Title	z/OS CS V1R4	z/OS CS V1R2	CS for OS/390 2.10 and z/OS CS V1R1	CS for OS/390 2.8
IP Network and Application Design Guide	ii13243			
IP Network Print Facility		ii12864		ii11627
IP Programmer's Reference	ii13256	ii12505		ii11634
IP and SNA Codes	ii13254	ii12504	ii12370	ii11917
IP User's Guide			ii12365 ii13060	ii11625
IP User's Guide and Commands	ii13247	ii12501	ii12365 ii13060	ii11625
IP System Admin Guide	ii13248	ii12502		
Quick Reference	ii13246	ii12500	ii12364	

Information APARs for SNA documents

Table 16 lists information APARs for SNA documents.

Table 16. SNA information APARs

Title	z/OS CS V1R4	z/OS CS V1R2	CS for OS/390 2.10 and z/OS CS V1R1	CS for OS/390 2.8
Anynet SNA over TCP/IP				ii11922
Anynet Sockets over SNA				ii11921
CSM Guide				
IP and SNA Codes	ii13254	ii12504	ii12370	ii11917
SNA Customization	ii13240	ii12872	ii12388	ii11923
SNA Diagnosis	ii13236	ii12490 ii13034`	ii12389	ii11915
SNA Messages	ii13238	ii12491	ii12382 ii12383	ii11916
SNA Network Implementation Guide	ii13234	ii12487	ii12381	ii11911
SNA Operation	ii13237	ii12489	ii12384	ii11914
SNA Migration	ii13233	ii12486	ii12386	ii11910
SNA Programming	ii13241	ii13033	ii12385	ii11920
Quick Reference	ii13246	ii12500	ii12364	ii11913
SNA Resource Definition Reference	ii13235	ii12488	ii12380 ii12567	ii11912 ii12568
SNA Resource Definition Samples				
SNA Data Areas	ii13239	ii12492	ii12387	ii11617

Other information APARs

Table 17 on page 543 lists information APARs not related to documents.

Table 17. Non-document information APARs

Content	Number
OMPROUTE	ii12026
iQDIO	ii11220
index of recomended maintenace for VTAM	ii11220
CSM for VTAM	ii12657
CSM for TCP/IP	ii12658
AHHC, MPC, and CTC	ii01501
DLUR/DLUS for z/OS V1R2	ii12986
Enterprise Extender	ii12223
Generic resources	ii10986
HPR	ii10953
MNPS	ii10370
Performance	ii11710 ii11711 ii11712

Appendix E. Accessibility

Accessibility features help a user who has a physical disability, such as restricted mobility or limited vision, to use software products successfully. The major accessibility features in z/OS enable users to:

- Use assistive technologies such as screen-readers and screen magnifier software
- Operate specific or equivalent features using only the keyboard
- Customize display attributes such as color, contrast, and font size

Using assistive technologies

Assistive technology products, such as screen-readers, function with the user interfaces found in z/OS. Consult the assistive technology documentation for specific information when using it to access z/OS interfaces.

Keyboard navigation of the user interface

Users can access z/OS user interfaces using TSO/E or ISPF. Refer to *z/OS TSO/E Primer*, *z/OS TSO/E User's Guide*, and *z/OS ISPF User's Guide Volume I* for information about accessing TSO/E and ISPF interfaces. These guides describe how to use TSO/E and ISPF, including the use of keyboard shortcuts or function keys (PF keys). Each guide includes the default settings for the PF keys and explains how to modify their functions.

© Copyright IBM Corp. 1984, 2002

Notices

IBM may not offer all of the products, services, or features discussed in this document. Consult your local IBM representative for information on the products and services currently available in your area. Any reference to an IBM product, program, or service is not intended to state or imply that only that IBM product, program, or service may be used. Any functionally equivalent product, program, or service that does not infringe any IBM intellectual property right may be used instead. However, it is the user's responsibility to evaluate and verify the operation of any non-IBM product, program, or service.

IBM may have patents or pending patent applications covering subject matter described in this document. The furnishing of this document does not give you any license to these patents. You can send license inquiries, in writing, to:

IBM Director of Licensing
IBM Corporation
North Castle Drive
Armonk, NY 10504-1785
U.S.A.

For license inquiries regarding double-byte (DBCS) information, contact the IBM Intellectual Property Department in your country or send inquiries, in writing, to:

IBM World Trade Asia Corporation
Licensing
2-31 Roppongi 3-chome, Minato-ku
Tokyo 106, Japan

The following paragraph does not apply to the United Kingdom or any other country where such provisions are inconsistent with local law:
INTERNATIONAL BUSINESS MACHINES CORPORATION PROVIDES THIS PUBLICATION "AS IS" WITHOUT WARRANTY OF ANY KIND, EITHER EXPRESS OR IMPLIED, INCLUDING, BUT NOT LIMITED TO, THE IMPLIED WARRANTIES OF NON-INFRINGEMENT, MERCHANTABILITY OR FITNESS FOR A PARTICULAR PURPOSE. Some states do not allow disclaimer of express or implied warranties in certain transactions, therefore, this statement may not apply to you.

This information could include technical inaccuracies or typographical errors. Changes are periodically made to the information herein; these changes will be incorporated in new editions of the publication. IBM may make improvements and/or changes in the product(s) and/or the program(s) described in this publication at any time without notice.

Any references in this information to non-IBM Web sites are provided for convenience only and do not in any manner serve as an endorsement of those Web sites. The materials at those Web sites are not part of the materials for this IBM product and use of those Web sites is at your own risk.

IBM may use or distribute any of the information you supply in any way it believes appropriate without incurring any obligation to you.

Licensees of this program who wish to have information about it for the purpose of enabling: (i) the exchange of information between independently created programs

© Copyright IBM Corp. 1984, 2002

and other programs (including this one) and (ii) the mutual use of the information which has been exchanged, should contact:

Site Counsel
IBM Corporation
P.O.Box 12195
3039 Cornwallis Road
Research Triangle Park, North Carolina 27709-2195
U.S.A

Such information may be available, subject to appropriate terms and conditions, including in some cases, payment of a fee.

The licensed program described in this information and all licensed material available for it are provided by IBM under terms of the IBM Customer Agreement, IBM International Program License Agreement, or any equivalent agreement between us.

Any performance data contained herein was determined in a controlled environment. Therefore, the results obtained in other operating environments may vary significantly. Some measurements may have been made on development-level systems and there is no guarantee that these measurements will be the same on generally available systems. Furthermore, some measurement may have been estimated through extrapolation. Actual results may vary. Users of this document should verify the applicable data for their specific environment.

Information concerning non-IBM products was obtained from the suppliers of those products, their published announcements or other publicly available sources. IBM has not tested those products and cannot confirm the accuracy of performance, compatibility or any other claims related to non-IBM products. Questions on the capabilities of non-IBM products should be addressed to the suppliers of those products.

All statements regarding IBM's future direction or intent are subject to change or withdrawal without notice, and represent goals and objectives only.

All IBM prices shown are IBM's suggested retail prices, are current and are subject to change without notice. Dealer prices may vary.

This information is for planning purposes only. The information herein is subject to change before the products described become available.

This information contains examples of data and reports used in daily business operations. To illustrate them as completely as possible, the examples include the names of individuals, companies, brands, and products. All of these names are fictitious and any similarity to the names and addresses used by an actual business enterprise is entirely coincidental.

COPYRIGHT LICENSE:

This information contains sample application programs in source language, which illustrates programming techniques on various operating platforms. You may copy, modify, and distribute these sample programs in any form without payment to IBM, for the purposes of developing, using, marketing or distributing application programs conforming to the application programming interface for the operating platform for which the sample programs are written. These examples have not been thoroughly

tested under all conditions. IBM, therefore, cannot guarantee or imply reliability, serviceability, or function of these programs. You may copy, modify, and distribute these sample programs in any form without payment to IBM for the purposes of developing, using, marketing, or distributing application programs conforming to IBM's application programming interfaces.

Each copy or any portion of these sample programs or any derivative work, must include a copyright notice as follows:

© (your company name) (year). Portions of this code are derived from IBM Corp. Sample Programs. © Copyright IBM Corp. _enter the year or years_. All rights reserved.

This product includes cryptographic software written by Eric Young.

If you are viewing this information softcopy, photographs and color illustrations may not appear.

You can obtain softcopy from the z/OS Collection (SK3T-4269), which contains BookManager and PDF formats of unlicensed books and the z/OS Licensed Product Library (LK3T-4307), which contains BookManager and PDF formats of licensed books.

Trademarks

The following terms are trademarks of the IBM Corporation in the United States or other countries or both:

ACF/VTAM
Advanced Peer-to-Peer Networking
AFP
AD/Cycle
AIX
AIX/ESA
AnyNet
APL2
AS/400
AT
BookManager
BookMaster
CBPDO
C/370
CICS
CICS/ESA
C/MVS
Common User Access
C Set ++
CT
CUA
DATABASE 2
DatagLANce
DB2
DFSMS
DFSMSdfp
DFSMShsm
DFSMS/MVS
DPI
Domino
DRDA
eNetwork
Enterprise Systems Architecture/370
ESA/390
ESCON
eServer
ES/3090
ES/9000
ES/9370
EtherStreamer
Extended Services
FAA
Micro Channel
MVS
MVS/DFP
MVS/ESA
MVS/SP
MVS/XA
MQ
Natural
NetView
Network Station
Nways
Notes
NTune
NTuneNCP
OfficeVision/MVS
OfficeVision/VM
Open Class
OpenEdition
OS/2
OS/390
OS/400
Parallel Sysplex
Personal System/2
PR/SM
PROFS
PS/2
RACF
Resource Link
Resource Measurement Facility
RETAIN
RFM
RISC System/6000
RMF
RS/6000
S/370
S/390
SAA
SecureWay
Slate
SP
SP2
SQL/DS
System/360

FFST
FFST/2
FFST/MVS
First Failure Support Technology
GDDM
Hardware Configuration Definition
IBM
IBMLink
IBMLINK
IMS
IMS/ESA
InfoPrint
Language Environment
LANStreamer
Library Reader
LPDA
MCS
System/370
System/390
SystemView
Tivoli
TURBOWAYS
UNIX System Services
Virtual Machine/Extended Architecture
VM/ESA
VM/XA
VSE/ESA
VTAM
WebSphere
XT
z/Architecture
z/OS
z/OS.e
zSeries
400
3090
3890

Lotus, Freelance, and Word Pro are trademarks of Lotus Development Corporation in the United States, or other countries, or both.

Tivoli and NetView are trademarks of Tivoli Systems Inc. in the United States, or other countries, or both.

DB2 and NetView are registered trademarks of International Business Machines Corporation or Tivoli Systems Inc. in the U.S., other countries, or both.

The following terms are trademarks of other companies:

ATM is a trademark of Adobe Systems, Incorporated.

BSC is a trademark of BusiSoft Corporation.

CSA is a trademark of Canadian Standards Association.

DCE is a trademark of The Open Software Foundation.

HYPERchannel is a trademark of Network Systems Corporation.

UNIX is a registered trademark in the United States, other countries, or both and is licensed exclusively through X/Open Company Limited.

Microsoft, Windows, Windows NT, and the Windows logo are trademarks of Microsoft Corporation in the United States, other countries, or both.

ActionMedia, LANDesk, MMX, Pentium, and ProShare are trademarks of Intel Corporation in the United States, other countries, or both. For a complete list of Intel trademarks, see http://www.intel.com/sites/corporate/tradmarx.htm .

Other company, product, and service names may be trademarks or service marks of others.

Index

A

accessibility features 545
ACT operand
  VARY ACQ command 449
  VARY ANS command 481
  VARY LOGON command 503
ACTION operand
  MODIFY ALSLIST command 280
  MODIFY DUMP command 316
  MODIFY LOAD command 339
  MODIFY RESOURCE command 370
ACTIVATE operand
  MODIFY DR command 311
activating resources 457
adaptive data compression 292
ADDR operand
  DISPLAY NCPSTOR command 151
  MODIFY DR command 311
ADDRESS operand
  DISPLAY VTAMSTOR command 271
adjacent control point, displaying 17, 103
adjacent link station list, modifying 279
adjacent nodes, displaying 237
adjacent SSCP tables, displaying 21
ADJLIST operand
  DISPLAY ADJSSCPS command 21
  MODIFY RESOURCE command 370
ADJSUB operand
  DISPLAY PATHTAB command 159
AFFDELAY start option 422
ALSNAME operand
  MODIFY NOTRACE command 354
  MODIFY TRACE command 402
ALSREQ start option
  displaying 262
  modifying 422
  setting 430
AMOUNT operand
  MODIFY TRACE command 403
ANS operand
  VARY ACT command 464
  VARY ANS command 481
API64R start option
  displaying 265
  modifying 422
  setting 430
APPC operand
  MODIFY USERVAR command 419
APPL operand
  DISPLAY STORUSE command 216
application jobs
  displaying storage usage for 216
application programs
  displaying 34
  displaying APPL major node 103
  displaying storage usage for 216
APPNCOS operand
  DISPLAY TOPO command 236
APPNCOS start option
  displaying 262
  modifying 422
  setting 430
ASIRFMSG start option
  displaying 262
  modifying 422
  setting 430
ASLTAB (associated LU table)
  displaying 221
  modifying resource associations 387
ASRCVLM operand
  MODIFY RESOURCE command 370
associated LU table (ASLTAB)
  displaying 221
  modifying resource associations 387
ASYDE start option
  displaying 262
  setting 430
AUTHLEN start option
  displaying 262
  modifying 422
  setting 430
automatic activation of link stations 472, 476
automatic logon relationship
  deleting 505
  effect on session termination 514
  establishing or changing 502
AUTORTRY start option
  displaying 262
  modifying 422
  setting 430
AUTOSES operand
  MODIFY DEFINE command 303
AUTOTI start option
  displaying 262
  modifying 422
  setting 430

B

BFRNUM operand
  MODIFY TRACE command 403
BLOCKED operand 163
BN start option
  displaying 262
  modifying 422
  setting 430
BNDYN start option
  displaying 262
  modifying 422
  setting 430
BNORD start option
  displaying 262
  modifying 422
  setting 430

© Copyright IBM Corp. 1984, 2002

BSCMDRS start option
displaying 262
modifying 422
setting 430
BSCTMOUT start option
displaying 262
setting 430
buffer contents trace
displaying status of 250
starting 415
stopping 362
BUFFER operand
DISPLAY BFRUSE command 40
buffer pool start options
displaying 40
setting 430
buffer pools, displaying 40
buffer use (SMS) trace
displaying status of 250
starting 416
stopping 363

C

CACHETI start option
displaying 262
setting 430
CDINIT requests, pending, recovery from 331
CDLINK operand
HALT command 276
HALT QUICK command 278
VARY INACT command 494
VARY REL command 510
CDRDYN start option
displaying 262
modifying 422
setting 430
CDRM (cross-domain resource manager)
displaying 48, 103
modifying ownership of resources 283
CDRM operand
DISPLAY ADJSSCPS command 21
DISPLAY CDRM command 283
CDRSC (cross-domain resource)
displaying
DISPLAY CDRSCS command 53
DISPLAY ID command for CDRSC major node 103
DISPLAY ID command for individual CDRSCs 115
CDRSC operand
DISPLAY ADJSSCPS command 21
CDRSCTI start option
displaying 262
setting 430
CDSERVR start option
displaying 262
setting 430
CDSREFER start option
displaying 262
modifying 422
CDSREFER start option *(continued)*
setting 430
CERTIFY operand
MODIFY SECURITY command 376
channel link station, displaying 123
channel link, displaying 123, 135
channel-attachment major node, displaying 106
checkpoint
date and time, displaying 240
taking 285
CINDXSIZ start option
displaying 262
setting 430
CKEY operand
MODIFY SECURITY command 376
Class of Service (COS) table
displaying contents of 221
displaying name of 69
modifying resource associations 387
clusters, displaying 58
CMIP services directory definition file
modifying 387
CMIPDDF
modifying 387
CMPAPPLI operand
MODIFY COMPRESS command 292
CMPAPPLO operand
MODIFY COMPRESS command 293
CMPMIPS start option
displaying 262
modifying 422
setting 430
CMPVTAM operand
MODIFY COMPRESS command 293
CMPVTAM start option
displaying 262
modifying 292, 422
setting 430
CNM (communication network management) trace
displaying status of 250
starting 416
stopping 362
CNMTAB start option
displaying 262
setting 430
CNNRTMSG start option
displaying 262
modifying 422
setting 430
CNOS (change number of sessions) information
displaying 63
modifying 288
CNSL operand
MODIFY TNSTAT command 392
COLD start option
displaying 262
setting 430
commands
correct and incorrect
logon manager 518
VTAM 10

commands *(continued)*
fundamentals
logon manager 517
VTAM 9
length limitation
logon manager 517
VTAM 10
procedure name
logon manager 517
VTAM 9
syntax diagrams, how to read 537
common service area (CSA) limit
modifying 294
communication controller disk contents, displaying 81
communication network management (CNM) trace
displaying status of 250
starting 416
stopping 362
communication scanner processor (CSP) dumps 316
Communications Server for z/OS, online information xiii
component ID, VTAM, displaying 262
compression level, data, modifying 292
CONFIG start option
displaying 262
setting 430
configuration lists 5
congestion level of node, displaying 240
CONNTYPE start option
displaying 262
modifying 422
setting 430
CONSEC operand
DISPLAY APING command 28
controlling a VTAM domain
commands involved in 5
conversations, displaying 66
CONVSECL operand
MODIFY CNOS command 289
COS (Class of Service) table
displaying contents of 221
displaying name of 69
modifying resource associations 387
COSNAME operand
DISPLAY ROUTE command 164
COUNT operand
MODIFY TRACE command 403
CPCDRSC start option
displaying 262
setting 430
CPCP operand
VARY ACT command 464
VARY DIAL command 484
CPCP start option
displaying 262
modifying 422
setting 430
CPNAME operand
MODIFY DIRECTRY command 307
cross-domain resource (CDRSC)
displaying
DISPLAY CDRSCS command 53
DISPLAY ID command for CDRSC major node 103
DISPLAY ID command for individual CDRSCs 115
cross-domain resource manager (CDRM)
displaying 48, 103
modifying ownership of resources 283
cross-reference for DISPLAY commands 527
cryptography level, modifying 320
CSA (common service area) limit
modifying 294
CSA24 start option
displaying 262
modifying 294, 422
setting 430
CSALIMIT operand
MODIFY CSALIMIT command 294
CSALIMIT start option
displaying 262
modifying 294, 422
setting 430
CSP (communication scanner processor) dumps 316

D

data compression level, modifying 292
DATA operand
MODIFY LL2 command 335
data spaces
displaying storage usage for 216
DATEFORM start option
displaying 262
setting 430
DDRAINL operand
MODIFY DEFINE command 303
deactivating resources 492
DELETE operand
MODIFY DEFINE command 304
VARY INACT command 494
dependent LU requesters, displaying 83
DEST operand
DISPLAY TOPO command 237
MODIFY TOPO command 394
DESTSUB operand
DISPLAY PATHTAB command 159
DISPLAY ROUTE command 164
dial connections
establishing 484
setting answer mode 481
terminating 488
terminating a manual operation 501
dial-out paths
displaying 157
making available or unavailable 507
directory information
displaying 77
modifying 306
saving 285

DIRSIZE start option
displaying 262
modifying 422
setting 430
DIRTIME start option
displaying 262
modifying 422
setting 430
disability, physical 545
DISCNTIM operand
MODIFY DEFAULTS command 301
MODIFY RESOURCE command 370
DISCNTIM start option
displaying 262
modifying 422
setting 430
DISPLAY ADJCLUST command 15
DISPLAY ADJCP command 17
DISPLAY ADJSSCPS command 20
DISPLAY APING command 28
DISPLAY APINGDTP command 33
DISPLAY APPLS command 34
DISPLAY APPNTOSA command 39
DISPLAY BFRUSE command 40
DISPLAY BNCOSMAP command 46
DISPLAY CDRMS command 48
DISPLAY CDRSCS command 52
DISPLAY CLSTRS command 57
DISPLAY CNOS command 63
DISPLAY command cross-reference 527
DISPLAY CONVID command 66
DISPLAY COS command 69
Display CPCP command 71
DISPLAY CSM command 74
DISPLAY DIRECTRY command 77
DISPLAY DISK command 81
DISPLAY DLURS command 83
DISPLAY EXIT command 84
DISPLAY GRAFFIN 87
DISPLAY GROUPS command 89
DISPLAY ID command 93
DISPLAY INOPDUMP command 133
DISPLAY LINES command 134
DISPLAY LMTBL command 139
DISPLAY LUGROUPS command 142
DISPLAY MAJNODES command 146
DISPLAY MODELS command 148
DISPLAY NCPSTOR command 151
DISPLAY NETSRVR command 153
DISPLAY PATHS command 157
DISPLAY PATHTAB command
description 159
versus DISPLAY ROUTE command 159
DISPLAY PENDING command 161
DISPLAY ROUTE command
description 163
versus DISPLAY PATHTAB command 159
DISPLAY RSCLIST command 170
DISPLAY RTPS 178
DISPLAY SATOAPPN command 182
DISPLAY SESSIONS command 183
DISPLAY SNSFILTR command 192
DISPLAY SRCHINFO command 193
DISPLAY STATIONS command 200
DISPLAY STATS command 205
DISPLAY STORUSE command 215
DISPLAY TABLE command 221
DISPLAY TERMS command 225
DISPLAY TGPS command 230
DISPLAY TNSTATP command 233
DISPLAY TOPO command 234
DISPLAY TRACES command 247
DISPLAY TRL command 255
DISPLAY TSOUSER command 259
DISPLAY USERVAR command 260
DISPLAY VTAMOPTS command 262
DISPLAY VTAMSTOR command 270
DLIMITS operand
MODIFY DEFINE command 304
DLOGMOD operand
MODIFY DEFAULTS command 301
MODIFY RESOURCE command 371
DLOGMOD value, predefined, modifying 300, 369
DLRTCB start option
displaying 262
setting 430
DLU operand
DISPLAY SRCHINFO command 195
DLURSAW operand
displaying 262
setting 430
DNS, online information xiii
documents, licensed xiv
DR (dynamic reconfiguration)
MODIFY DR command 309
VARY ACT command 476
VARY DRDS command 485
DRAINL operand
MODIFY CNOS command 290
DRAINR operand
MODIFY CNOS command 290
DRESPL operand
MODIFY DEFINE command 304
DSPLYDEF start option
displaying 262
modifying 422
setting 430
DSPLYMAX start option
displaying 262
setting 430
DSPLYWLD start option
displaying 262
modifying 422
setting 430
DSPNAME operand
DISPLAY STORUSE command 216
DUMP operand
HALT CANCEL command 277
DUMPDS operand
MODIFY DUMP command 317
DUMPLOAD operand
VARY ACT command 464

dumps
displaying 81
taking
CSP 319
MOSS 319
NCP 319
DUMPSTA operand
MODIFY DUMP command 317
VARY ACT command 465
DWACT operand
VARY ACT command 465
DYNADJCP start option
displaying 262
setting 430
dynamic reconfiguration (DR)
MODIFY DR command 309
VARY ACT command 476
VARY DRDS command 485
dynamic resources, warning about deactivating 496
dynamic switched PUs and LUs, displaying model definitions for 148
DYNASSCP start option
displaying 262
setting 430
DYNDLGMD start option
displaying 262
modifying 422
setting 430
DYNLU start option
displaying 262
setting 430
DYNMODTB start option
displaying 262
modifying 422
setting 430
DYNVNPFX start option 430

E

ECHO operand
DISPLAY APING command 28
ECSA operand
MODIFY CSM command 299
ENCR operand
MODIFY ENCR command 320
MODIFY SECURITY command 376
ENCRPREF start option
displaying 262
modifying 422
setting 430
ENCRTYPE 377
encryption facility 320
ENCRYPTN start option
displaying 262
modifying 422
setting 430
end nodes, displaying 237
END operand
VARY INOP command 501
ENHADDR start option
displaying 262
ENHADDR start option *(continued)*
setting 430
ENHTG operand
displaying 262
setting 430
ENTERPRISE EXTENDER
display id command 108, 130
ER (explicit route)
displaying status of 159, 163
ER operand
DISPLAY ROUTE command 164
ESIRFMSG start option
displaying 262
modifying 422
setting 430
ETIME operand
DISPLAY CONVID command 66
EXCLUDE operand
DISPLAY RSCLIST command 172
EXIT (SME buffer) trace
displaying status of 250
starting 416
stopping 362
exit routine information, displaying 84
exit routines
activating 323
deactivating 323
displaying 84
replacing 323
explicit route (ER)
displaying status of 159, 163
external CDRM, displaying 118
external communication adapter (XCA) major node
displaying 106

F

FINAL operand
VARY INACT command 494
VARY REL command 511
FIXED operand
MODIFY CSM command 299
FLDTAB (message-flooding prevention table)
displaying 221
modifying resource associations 388
FLDTAB start option
displaying 262
setting 430
FORMAT operand
DISPLAY VTAMOPTS command 263
frame relay switching equipment set (FRSESET)
adding PUs
VARY ACT command 478
deleting PUs
MODIFY DR command 310
VARY ACT command 478
VARY DRDS command 485
displaying 95
FRAMES operand
MODIFY TRACE command 404

FROM operand
  MODIFY DR command 312
FROMCP operand
  DISPLAY SRCHINFO command 195
FROMSSCP operand
  DISPLAY SRCHINFO command 196
FRSESET (frame relay switching equipment set)
  adding PUs
    VARY ACT command 478
  deleting PUs
    MODIFY DR command 310
    VARY ACT command 478
    VARY DRDS command 485
  displaying 95
FSIRFMSG start option
  displaying 262
  modifying 422
  setting 430
FUNCTION operand
  DISPLAY VTAMOPTS command 263
  MODIFY DIRECTRY command 307
  MODIFY TOPO command 394

G

generalized PIU trace (GPT)
  displaying status of 250
  starting 416
  stopping 362
GID operand
  VARY PATH command 507
GPT (generalized PIU trace)
  displaying status of 250
  starting 416
  stopping 362
GWSSCP start option
  displaying 262
  setting 430

H

HALT CANCEL command 277
HALT command 276
HALT QUICK command 278
halting VTAM
  HALT CANCEL command 277
  HALT command 276
  HALT QUICK command 278
hardware errors, detecting
  MODIFY IMR command 326
  MODIFY LL2 command 334
HNTSIZE start option
  displaying 262
  setting 430
host CDRM, displaying 117
host physical unit
  displaying 105
  tracing 406
HOSTPU start option
  displaying 262
  setting 430
HOSTSA start option
  displaying 262
  setting 430
HOTIOTRM start option
  displaying 262
  modifying 422
  setting 430
HPR operand
  VARY ACT command 466
HPR start option
  displaying 262
  setting 430
HPRNCPBF start option
  displaying 262
  modifying 422
  setting 430
HPRPST start option
  displaying 262
  modifying 422
  setting 430
HSRTSIZE start option
  displaying 262
  setting 430

I

IBM Software Support Center, contacting xiv
ID operand
  DISPLAY ADJCP command 17
  DISPLAY APING command 28
  DISPLAY APPLS command 35
  DISPLAY CDRMS command 49
  DISPLAY CDRSCS command 53
  DISPLAY CLSTRS command 58
  DISPLAY CNOS command 63
  DISPLAY CONVID command 66
  DISPLAY COS command 69
  DISPLAY DIRECTRY command 77
  DISPLAY DISK command 81
  DISPLAY EXIT command 84
  DISPLAY GROUPS command 89
  DISPLAY ID command 95
  DISPLAY LINES command 135
  DISPLAY LMTBL command 139
  DISPLAY LUGROUPS command 143
  DISPLAY MODELS command 148
  DISPLAY NCPSTOR command 151
  DISPLAY PATHS command 157
  DISPLAY PENDING command 161
  DISPLAY RSCLIST command 172
  DISPLAY STATIONS command 201
  DISPLAY TABLE command 221
  DISPLAY TERMS command 226
  DISPLAY TGPS command 230
  DISPLAY TOPO command 237
  DISPLAY TRACES command 248
  DISPLAY TSOUSER command 259
  DISPLAY USERVAR command 260
  MODIFY ALSLIST command 281
  MODIFY CDRM command 284
  MODIFY CNOS command 290

ID operand *(continued)*
MODIFY COMPRESS command 293
MODIFY DEFAULTS command 301
MODIFY DEFINE command 305
MODIFY DIRECTRY command 308
MODIFY DR command 312
MODIFY DUMP command 317
MODIFY ENCR command 321
MODIFY EXIT command 324
MODIFY IMR command 326
MODIFY INFO command 520
MODIFY LINEDEF command 333
MODIFY LL2 command 335
MODIFY LOAD command 342
MODIFY MINLINK command 523
MODIFY NEGPOLL command 347
MODIFY NOTRACE command 355
MODIFY POLL command 364
MODIFY PROFILES command 366
MODIFY RESOURCE command 371
MODIFY RTP command 374
MODIFY SECURITY command 377
MODIFY SESSION command 379
MODIFY TABLE command 385
MODIFY TGP command 389
MODIFY TOPO command 395
MODIFY TRACE command 404
MODIFY USERVAR command 420
VARY ACQ command 450
VARY ACT command 466
VARY ANS command 481
VARY DIAL command 484
VARY DRDS command 487
VARY HANGUP command 488
VARY INACT command 495
VARY INOP command 501
VARY LOGON command 503
VARY NOLOGON command 505
VARY PATH command 507
VARY REL command 511
IDTYPE operand
DISPLAY CLSTRS command 58
DISPLAY ID command 96
DISPLAY RSCLIST command 173
DISPLAY TRACES command 250
MODIFY NOTRACE command 355
MODIFY TRACE command 408
VARY ACT command 468
VARY INACT command 496
IMR (intensive mode recording) 326
independent logical unit
deactivating 494
displaying
as CDRSC 53, 117
under PU that provides boundary function 100
dynamic reconfiguration 313
modifying
entry in adjacent link station list 279
tracing 407
information APARs for IP-related documents 541
information APARs for non- document information 542
information APARs for SNA-related documents 542
INITDB start option
displaying 262
setting 430
initial program load (IPL)
scheduling for communication controller 338
INOPDUMP start option
displaying 262
modifying 422
setting 430
input/output problem determination (IOPD) facility
time-out interval, changing 330
input/output trace
displaying status of 250
starting 416
stopping 362
INSTANCE operand
MODIFY APINGDTP command 282
intensive mode recording (IMR) 326
interchange nodes, displaying 238
Internet, finding z/OS information online xiii
IOINT operand
MODIFY IOPD command 330
IOINT start option
displaying 262
modifying 330, 422
setting 430
IOMSGLIM start option
displaying 262
modifying 422
setting 430
IOPD (input/output problem determination) facility
time-out interval, changing 330
IOPURGE operand
MODIFY IOPURGE command 331
IOPURGE start option
displaying 262
modifying 331, 422
IP ADDRESS 94
IPADDR start option 430
IPL (initial program load)
scheduling for communication controller 338
IPLTIME operand
MODIFY LOAD command 342
IQDCHPID start option
displaying 264
modifying 422
setting 430
IRNSTRGE start option
displaying 262
setting 430
ISTCOSDF start option
displaying 262
modifying 422
setting 430
ITER operand
DISPLAY APING command 29

J

JOBNAME operand
  DISPLAY STORUSE command 216

K

keyboard 545

L

LENGTH operand
  DISPLAY NCPSTOR command 151
  DISPLAY VTAMSTOR command 271
license, patent, and copyright information 547
licensed documents xiv
LIMINTCP start option
  displaying 262
  modifying 422
  setting 430
LIMITS operand
  MODIFY CNOS command 290
line errors, recording 326
line groups, displaying 89, 119
LINE operand
  MODIFY NOTRACE command 356
  MODIFY TRACE command 408
line trace, NCP
  displaying status of 250
  starting 416
  stopping 363
lines, displaying 135
link level 2 test, starting and stopping 334
link stations
  cross-subarea
    displaying 201
    recording line errors for 326
links
  logon manager, changing minimum number of 523
LIST operand
  DISPLAY CLSTRS command 58
  DISPLAY LINES command 135
  DISPLAY SESSIONS command 184
  DISPLAY SRCHINFO command 196
  DISPLAY STORUSE command 216
  DISPLAY TOPO command 237
LIST start option
  displaying 262
  setting 430
LISTBKUP start option
  setting 430
load module
  displaying 81
  storing, replacing, purging, or renaming 338
LOAD operand
  VARY ACT command 469
LOADFROM operand
  VARY ACT command 470
LOADMOD operand
  MODIFY LOAD command 343
  VARY ACQ command 450
LOADMOD operand *(continued)*
  VARY ACT command 470
LOADSTA operand
  VARY ACT command 470
local non-SNA major node, displaying 105
local SNA major node, displaying 104
LOCSIZE operand 234
logical unit (LU)
  displaying 128
LOGMODE operand
  DISPLAY APING command 29
  DISPLAY CNOS command 63
  DISPLAY CONVID command 66
  MODIFY CNOS command 290
  MODIFY DEFINE command 305
  VARY ACT command 471
  VARY LOGON command 504
logon interpret table (LOGTAB)
  displaying 221
  modifying resource associations 388
logon manager
  commands
    displaying help for 519
    entering 517
    procedure name 517
    where to enter 517
  displaying resources 520
  links, modifying minimum number of 523
  purpose 517
  starting 525
  stopping 524
logon mode table (MODETAB)
  displaying 221
  modifying resource associations 388
LOGON operand
  VARY ACT command 471
  VARY LOGON command 504
LOGTAB (logon interpret table)
  displaying 221
  modifying resource associations 388
LU (logical unit)
  displaying 128
LU-mode table
  displaying 139
  modifying entries in 303
LU1 operand
  DISPLAY SESSIONS command 184
  DISPLAY SRCHINFO command 196
  VARY TERM command 513
LU2 operand
  DISPLAY SESSIONS command 185
  DISPLAY SRCHINFO command 196
  VARY TERM command 513
LUGROUP major nodes, displaying 143
LUNAME operand
  DISPLAY CNOS command 63
  DISPLAY CONVID command 67
  DISPLAY LMTBL command 139
  MODIFY CNOS command 291
  MODIFY DEFINE command 305

M

MAC operand
  MODIFY SECURITY command 377
MACLNTH operand
  MODIFY SECURITY command 378
MACTYPE operand
  MODIFY SECURITY command 378
maintenance operator subsystem (MOSS) dumps 316
MAINTLVL start option
  displaying 262
  setting 430
MAJNODE operand
  DISPLAY RSCLIST command 174
major node, displaying 94, 146
MAX operand
  DISPLAY ADJSSCPS command 21, 87
  DISPLAY APPLS command 35
  DISPLAY CDRMS command 49
  DISPLAY CDRSCS command 53
  DISPLAY CLSTRS command 59
  DISPLAY DIRECTRY command 78
  DISPLAY EXIT command 85
  DISPLAY GROUPS command 90
  DISPLAY ID command 98
  DISPLAY LINES command 135
  DISPLAY LUGROUPS command 143
  DISPLAY MAJNODES command 146
  DISPLAY PATHTAB command 159
  DISPLAY PENDING command 161
  DISPLAY RSCLIST command 174
  DISPLAY SESSIONS command 185
  DISPLAY SRCHINFO command 196
  DISPLAY STATIONS command 201
  DISPLAY STATS command 208
  DISPLAY STORUSE command 217
  DISPLAY TABLE command 221
  DISPLAY TERMS command 226
  DISPLAY TGPS command 230
  DISPLAY TRL command 256
  DISPLAY USERVAR command 260
MAXLOCAT start option
  displaying 262
  modifying 422
  setting 430
MAXLURU start option
  displaying 262
  modifying 422
  setting 430
MAXSSCPS start option
  displaying 262
  modifying 422
  setting 430
MAXSUBA start option
  displaying 262
  setting 430
MDLTAB (model name table)
  displaying 221
  modifying resource associations 388
MEMBER operand
  MODIFY MEMBER command 522
message flooding prevention table (FLDTAB)
  displaying 221
  modifying resource associations 388
messages
  including module ID in 345
  modifying suppression level 380
MIHTMOUT start option
  displaying 262
  modifying 422
  setting 430
MINLINK operand
  MODIFY MINLINK command 523
minor node, displaying 94
MODE operand
  MODIFY NOTRACE command 356
  MODIFY TRACE command 408
model LU groups, displaying 143
model name table (MDLTAB)
  displaying 221
  modifying resource associations 388
model resources, displaying 148
MODETAB (logon mode table)
  displaying 221
  modifying resource associations 388
MODIFY ALSLIST command 279
MODIFY APINGDTP command 282
MODIFY CDRM command 283
MODIFY CHKPT command 285
MODIFY CNOS command 287
MODIFY COMPRESS command 292
MODIFY CSALIMIT command 294
MODIFY CSDUMP Command 297
MODIFY CSM command 299
MODIFY DEFAULTS command 300
MODIFY DEFINE command 302
MODIFY DIRECTRY command 306
MODIFY DR command 309
MODIFY DUMP command 314
MODIFY ENCR command 320
MODIFY EXIT command 322
MODIFY HELP command 519
MODIFY IMR command 326
MODIFY INFO command 520
MODIFY INOPDUMP command 328
MODIFY IOPD command 330
MODIFY IOPURGE command 331
MODIFY LINEDEF command 333
MODIFY LL2 command 334
MODIFY LOAD command 337
MODIFY MEMBER command 522
MODIFY MINLINK command 523
MODIFY MSGMOD command 345
MODIFY NCP Command 346
MODIFY NEGPOLL command 347
MODIFY NOTNSTAT command 348
MODIFY NOTRACE command 349
MODIFY POLL command 364
MODIFY PPOLOG command 365
MODIFY PROFILES command 366
MODIFY QUERY command 367
MODIFY RESOURCE command 368

MODIFY RTP command 374
MODIFY SECURITY command 375
MODIFY SESSION command 379
MODIFY STOP command 524
MODIFY SUPP command 380
MODIFY TABLE command 382
MODIFY TGP command 389
MODIFY TNSTAT command 391
MODIFY TOPO command 393
MODIFY TRACE command 396
MODIFY USERVAR command 418
MODIFY VTAMOPTS command 422
MODSRCH operand
  MODIFY RESOURCE command 371
module name
  including in messages 345
MODULE operand
  DISPLAY VTAMSTOR command 271
  MODIFY EXIT command 324
module trace
  displaying status of 250
  starting 416
  stopping 363
MOSS (maintenance operator subsystem) dumps 316
MSGLEVEL start option
  displaying 262
  modifying 422
  setting 430
MSGMOD operand
  MODIFY MSGMOD command 345
MSGMOD start option
  displaying 262
  modifying 345, 422
  setting 430
mutually exclusive operand table 460
MXSAWBUF start option
  displaying 262
  setting 430
MXSSCPRU start option
  displaying 262
  setting 430
MXSUBNUM start option
  displaying 262
  setting 430

N

NBRMODE operand
  MODIFY CNOS command 291
NCP (Network Control Program)
  acquiring 448
  dumping 316
  dynamic reconfiguration 309, 485
  line trace
    displaying status of 250
  loading 338
  major node, displaying 105
  releasing 509
  storage, displaying 151
NCPBUFSZ start option
  displaying 262
NCPBUFSZ start option *(continued)*
  setting 430
negative polling limit, modifying 347
NEGPOLL operand
  MODIFY NEGPOLL command 347
NETADDR operand
  DISPLAY VTAMSTOR command 271
NETID operand
  DISPLAY ADJCLUST command 15
  DISPLAY ADJSSCPS command 22
  DISPLAY BNCOSMAP command 46
  DISPLAY CDRSCS command 53
  DISPLAY COS command 69
  DISPLAY ID command 98
  DISPLAY ROUTE command 165
  DISPLAY VTAMSTOR command 271
  MODIFY TABLE command 385
NETID start option
  displaying 262
  setting 430
NETSRVR operand
  MODIFY DIRECTRY command 308
network configuration
  logon manager, modifying 522
Network Control Program (NCP)
  acquiring 448
  dumping 316
  dynamic reconfiguration 309, 485
  line trace
    displaying status of 250
  loading 338
  major node, displaying 105
  releasing 509
  storage, displaying 151
network controller (3710) line trace
  displaying status of 250
  starting 416
  stopping 363
network node server list, displaying 153
network node servers, displaying 153, 237
network nodes, displaying 238
NEWALS operand
  MODIFY ALSLIST command 281
NEWNAME operand
  MODIFY LOAD command 343
NEWPATH operand
  VARY ACT command 472
NEWTAB operand
  MODIFY TABLE command 385
NFRAMES operand
  MODIFY LL2 command 335
NMVTLOG start option
  displaying 262
  setting 430
NNSPREF option
  display vtamopts command 267
  modify vtamopts command 422
  start command 430
node congestion, displaying 240
node type, displaying 240, 262
node, displaying 94

NODELST start option
displaying 262
setting 430
NODETYPE start option
displaying 262
setting 430
NOLOGON operand
VARY NOLOGON command 506
NOPROMPT start option
setting 430
NOTIFY operand
MODIFY LOAD command 343
VARY TERM command 513
NOTNSTAT start option
displaying 262
setting 430
NOTRACE start option
setting 430
NQNMODE start option
displaying 262
modifying 422
setting 430
NSRTSIZE start option
displaying 262
setting 430
NTRANS operand
MODIFY LL2 command 336
NUM operand
DISPLAY STATS command 208
DISPLAY STORUSE command 217
NUMTREES start option
displaying 262
modifying 422
setting 430

O

OLDALS operand
MODIFY ALSLIST command 281
OLDTAB operand
MODIFY TABLE command 385
OLU operand
DISPLAY SRCHINFO command 197
OPTION operand
DISPLAY VTAMOPTS command 266
MODIFY CSALIMIT command 296
MODIFY DUMP command 318
MODIFY EXIT command 325
MODIFY IMR command 326
MODIFY LL2 command 336
MODIFY NOTRACE command 356
MODIFY TABLE command 386
MODIFY TRACE command 409
MODIFY USERVAR command 420
ORIG operand
DISPLAY TOPO command 239
MODIFY TOPO command 395
ORIGIN operand
DISPLAY ROUTE command 165
MODIFY TABLE command 387
OSA-Express
modify notrace command 355
modify trace command 404
OSIEVENT start option
displaying 262
modifying 422
setting 430
OSIMGMT start option
displaying 262
modifying 422
setting 430
OSITOPO start option
displaying 262
modifying 422
setting 430
OSRTSIZE start option
displaying 262
setting 430
OWNER operand
DISPLAY CLSTRS command 59
DISPLAY LINES command 135
VARY ACQ command 450
VARY REL command 511
OWNERID operand
DISPLAY CSM command 74
ownership of resources, modifying 306

P

PARMS operand
MODIFY EXIT command 325
PASSWORD operand
DISPLAY APING command 29
PATH operand
VARY PATH command 507
PATHINFO operand 185
paths, dial-out
displaying 157
making available or unavailable 507
PDTRCBUF start option
displaying 262
modifying 422
setting 430
PEND operand
MODIFY INFO command 520
pending operations, time-out interval for 330
pending requests, time-out interval for 331
pending state, displaying resources in 161
physical unit (PU)
acquiring 448
displaying 124
releasing 509
switched
displaying dial-out path information for 157
establishing switched connection for 484
making dial-out path available for 507
terminating switched connection for 488
PID operand
VARY PATH command 508
PIUMAXDS start option
displaying 262

PIUMAXDS start option *(continued)*
modifying 422
setting 430
PLU operand
DISPLAY SESSIONS command 185
VARY TERM command 513
PLUALMSG start option
displaying 262
modifying 422
setting 430
POLL operand
MODIFY POLL command 364
polling
modifying negative response limit 347
polling delay, modifying 364
POOL operand
DISPLAY STORUSE command 217
POOLTYPE operand
DISPLAY STORUSE command 217
PPO (primary program operator)
logging commands and messages 365
PPOLOG operand
MODIFY PPOLOG command 365
PPOLOG start option
displaying 262
modifying 422
setting 430
primary program operator (PPO)
logging commands and messages 365
profiles
RACF, updating 366
transmission group
displaying 230
modifying 389
PROMPT start option
setting 430
PSRETRY start option
displaying 262
modifying 422
setting 430
PSSTRACE start option
modifying 422
setting 430
PSWEIGHT start option 422
PU (physical unit)
acquiring 448
displaying 124
releasing 509
switched
displaying dial-out path information for 157
establishing switched connection for 484
making dial-out path available for 507
terminating switched connection for 488
PU operand
MODIFY NOTRACE command 361
MODIFY TRACE command 413
PUSUB operand
VARY ACQ command 450

R

RACF (Resource Access Control Facility)
profiles, updating 366
RECLIM operand
MODIFY IMR command 327
REGISTER operand
MODIFY RESOURCE command 372
resource
configuration list 5
Resource Access Control Facility (RACF)
profiles, updating 366
RESOURCE operand
DISPLAY VTAMSTOR command 272
resource state (STATE) trace
displaying status of 251
starting 416
stopping 363
RESP operand
MODIFY CNOS command 291
RESUSAGE start option
displaying 262
modifying 422
setting 430
RFC (request for comments)
accessing online xiii
RMPO operand
MODIFY DUMP command 318
VARY ACT command 497
RNAME operand
VARY ACT command 472
route addition resistance, displaying 240
ROUTERES start option
displaying 262
modifying 422
setting 430
routes
displaying 159
testing 163
run-length encoding (data compression) 292

S

SACONNS 430
SAMAP option
cross-reference table 529, 531, 533
display samap command 181
SAVE operand
MODIFY TRACE command 413
SAVEMOD operand
VARY ACT command 473
SAVERSCV operand
modify vtamopts command 422
start command 430
SAVESESS operand
VARY INACT command 497
SAW (session awareness) data filter table
modifying resource associations 387
SAWMAXDS start option
displaying 262
setting 430

SAWMXQPK start option
displaying 262
modifying 422
setting 430
scanner interface trace (SIT)
displaying status of 250
starting 416
stopping 363
SCOPE operand
DISPLAY ADJCLUST command 15
DISPLAY ADJCP command 17
DISPLAY ADJSSCPS command 22
DISPLAY APPLS command 35
DISPLAY BNCOSMAP command 46
DISPLAY CDRMS command 49
DISPLAY CDRSCS command 54
DISPLAY CLSTRS command 59
DISPLAY DIRECTRY command 78
DISPLAY GROUPS command 90
DISPLAY ID command 99
DISPLAY LINES command 136
DISPLAY LMTBL command 140
DISPLAY LUGROUPS command 143
DISPLAY MODELS command 148
DISPLAY NETSRVR command 153
DISPLAY RSCLIST command 175
DISPLAY SESSIONS command 186
DISPLAY STATIONS command 201
DISPLAY TABLE command 222
DISPLAY TERMS command 226
MODIFY NOTRACE command 361
MODIFY TOPO command 395
MODIFY TRACE command 414
VARY ACT command 473
VARY TERM command 513
SDLCMDRS start option
displaying 262
modifying 422
setting 430
SECLVLCP start option
displaying 262
setting 430
security profiles, updating 366
servers, network node, displaying 153
session awareness (SAW) data filter table
modifying resource associations 387
session limits, modifying
MODIFY CNOS command 288
MODIFY SESSION command 379
SESSION operand
MODIFY SESSION command 379
session status, displaying 184
sessions
terminating 512
shortcut keys 545
SID operand
DISPLAY SESSIONS command 186
DISPLAY SRCHINFO command 197
VARY TERM command 514
SIRFMSG start option
displaying 262
SIRFMSG start option *(continued)*
modifying 422
setting 430
SIT (scanner interface trace)
displaying status of 250
starting 416
stopping 363
SIZE operand
DISPLAY APING command 29
MODIFY TRACE command 414
SLOWVAL start option
displaying 262
modifying 422
setting 430
SLU operand
DISPLAY SESSIONS command 186
VARY TERM command 514
SLUALMSG start option
displaying 262
modifying 422
setting 430
SME buffer (EXIT) trace
displaying status of 250
starting 416
stopping 362
SMEAUTH start option
displaying 262
setting 430
SMS (buffer use) trace
displaying status of 250
starting 416
stopping 363
SNA protocol specifications 539
SNAPREQ start option
displaying 262
setting 430
SNGSESLU operand
MODIFY CNOS command 291
SNVC start option
displaying 262
modifying 422
setting 430
SONLIM start option
displaying 262
setting 430
SORDER start option
displaying 262
modifying 422
setting 430
SRCHRED start option
displaying 262
modifying 422
setting 430
SRCLEAR operand
MODIFY RESOURCE command 372
SRCOUNT operand
MODIFY RESOURCE command 372
SRCOUNT start option
displaying 262
modifying 422
setting 430

SRTIMER operand
MODIFY RESOURCE command 372
SRTIMER start option
displaying 262
modifying 422
setting 430
SSCPDYN start option
displaying 262
setting 430
SSCPID start option
displaying 262
setting 430
SSCPNAME start option
displaying 262
setting 430
SSCPORD start option
displaying 262
setting 430
SSDTMOUT start option
displaying 262
modifying 422
setting 430
SSEARCH start option
displaying 262
modifying 422
setting 430
START command
for logon manager 525
for VTAM 430
start list
changing 7
use of 5
start options
displaying 262
modifying 429
setting 446
starting VTAM 446
STATE (resource state) trace
displaying status of 251
starting 416
stopping 363
statistical information, displaying 207
STOP operand
MODIFY STOP command 524
stopping VTAM
HALT CANCEL command 277
HALT command 276
HALT QUICK command 278
STORAGE operand
DISPLAY NCPSTOR command 151
storage pools
displaying storage usage for 216
storage usage information, displaying 216
storage, NCP, displaying 151
STRGR start option
displaying 262
setting 430
STRMNPS start option
displaying 262
setting 430
STRNAME operand
DISPLAY STATS command 208
SUBTRACE operand
displaying 248
modifying 362, 415
setting 430
SUPP operand
MODIFY SUPP command 381
SUPP start option
displaying 262
modifying 422
setting 430
suppression level of messages, modifying 380
switched major node, displaying 106
switched PU
displaying dial-out path information for 157
establishing switched connection for 484
making dial-out path available or unavailable 507
terminating switched connection for 488
SWNORDER start option
displaying 262
modifying 422
setting 430
syntax notation
description of 537

T

tables
changing associations of 383
deleting associations of 383
displaying 221
loading 383
TCP/IP
online information xiii
TCPNAME start option 430
terminals, displaying 225
TEST operand
DISPLAY ROUTE command 165
TG (transmission group) information
displaying 235
TG (transmission group) profiles
displaying 230
modifying 389
TG (transmission group) trace
displaying status of 250
starting 416
stopping 363
TGN operand
DISPLAY TOPO command 239
MODIFY TGP command 389
MODIFY TOPO command 395
TGPNAME operand
MODIFY TGP command 390
TIME operand
MODIFY TNSTAT command 392
TNSTAT start option
displaying 262
setting 430
TO operand
MODIFY DR command 312

TOCP operand
DISPLAY SRCHINFO command 197
topology database
deleting entries from 394
displaying 235
saving 285
TOSSCP operand
DISPLAY SRCHINFO command 197
TP operand
DISPLAY APING command 29
TRACE start option
displaying 248
modifying 402
setting 430
TRACEPT operand
MODIFY TRACE command 415
traces
displaying status of 248
starting and modifying 402
stopping 354
trademark information 550
TRANSLAT start option
displaying 262
setting 430
transmission group (TG) information
displaying 235
transmission group (TG) profiles
displaying 230
modifying 389
transmission group (TG) trace
displaying status of 250
starting 416
stopping 363
transport resource list (TRL)
displaying 255
TRL (transport resource list)
displaying 255
TRLE operand
DISPLAY TRL command 256
truncation of message text 345
TSO user ID
displaying status of 259
TSO user trace
displaying status of 251
starting 417
stopping 363
tuning statistics
starting the recording of 391
stopping the recording of 348
TYPE operand
DISPLAY LMTBL command 140
DISPLAY SRCHINFO command 197
DISPLAY STATS command 208
DISPLAY TRACES command 250
DISPLAY VTAMSTOR command 272
MODIFY CDRM command 284
MODIFY CHKPT command 285
MODIFY DR command 312
MODIFY DUMP command 318
MODIFY NOTRACE command 362
MODIFY TABLE command 387
TYPE operand *(continued)*
MODIFY TOPO command 395
MODIFY TRACE command 415
MODIFY USERVAR command 420
VARY INACT command 497
VARY REL command 511
VARY TERM command 514

U

U operand
VARY ACT command 475
ULPID operand
DISPLAY TRL command 256
unformatted system services (USS) table
command syntax 13
displaying 221
modifying resource associations 388
UPDATE operand
VARY ACT command 476
UPDDELAY start option
displaying 262
modifying 422
setting 430
USE operand
DISPLAY LINES command 137
MODIFY LINEDEF command 333
user interface
ISPF 545
TSO/E 545
USERID operand
DISPLAY APING command 29
USERVAR applications
defining, changing, or deleting 419
displaying 260
USS (unformatted system services) table
command syntax 13
displaying 221
modifying resource associations 388
USSTAB start option
displaying 262
setting 430
UVEXIT operand
MODIFY USERVAR command 420

V

VALUE operand
MODIFY USERVAR command 421
VARY ACQ command 448
VARY ACT command 452
VARY ANS command 481
VARY DIAL command 484
VARY DRDS command 485
VARY HANGUP command 488
VARY INACT command 489
VARY INOP command 501
VARY LOGON command 502
VARY NOLOGON command 505
VARY PATH command 507
VARY REL command 509

VARY TERM command 512
VARYWLD start option
  displaying 262
  modifying 422
  setting 430
VERIFYCP start option
  displaying 262
  setting 430
version and release of VTAM, displaying 262
VFYRED start option
  displaying 262
  modifying 422
  setting 430
VFYREDTI start option
  displaying 262
  modifying 422
  setting 430
virtual nodes, displaying 238
virtual route (VR)
  displaying status of 159, 163
VIT (VTAM internal trace)
  displaying status of 251
  starting 417
  stopping 363
VOSDEACT start option
  displaying 264
  modifying 422
  setting 430
VR (virtual route)
  displaying status of 159, 163
VR operand
  DISPLAY ROUTE command 164
VRTG start option
  displaying 262
  modifying 422
  setting 430
VRTGCPCP operand
  VARY ACT command 480
VRTGCPCP start option
  displaying 262
  modifying 422
  setting 430
VTAM
  changing with MODIFY 7
  changing with VARY 6
  halting 5
VTAM internal trace (VIT)
  displaying status of 251
  starting 417
  stopping 363
VTAM, online information xiii
VTAMEAS start option
  displaying 262
  setting 430

W

WARM operand
  VARY ACT command 480
WARM start option
  displaying 262
WARM start option *(continued)*
  setting 430
weight of node, displaying 240
wildcard network IDs
  DISPLAY ADJCP command 17
  DISPLAY ID command 96
  MODIFY TGP command 389
wildcard resource names
  DISPLAY APPLS command 35
  DISPLAY CDRMS command 49
  DISPLAY CDRSCS command 53
  DISPLAY CLSTRS command 58
  DISPLAY GROUPS command 90
  DISPLAY LINES command 135
  DISPLAY RSCLIST command 172
  DISPLAY TERMS command 226
  DISPLAY TGPS command 230
  DISPLAY TOPO command 237
  DISPLAY TRACES command 248

X

XCA (external communication adapter) major node
  displaying 106
XCFINIT start option
  displaying 262
  setting 430
XLENGTH operand
  DISPLAY VTAMSTOR command 273
XNETALS start option
  displaying 262
  setting 430

Z

Z (HALT) command 276
z/OS, documentation library listing xv
z/OS, listing of documentation available 541

Communicating Your Comments to IBM

If you especially like or dislike anything about this document, please use one of the methods listed below to send your comments to IBM. Whichever method you choose, make sure you send your name, address, and telephone number if you would like a reply.

Feel free to comment on specific errors or omissions, accuracy, organization, subject matter, or completeness of this document. However, the comments you send should pertain to only the information in this manual and the way in which the information is presented. To request additional publications, or to ask questions or make comments about the functions of IBM products or systems, you should talk to your IBM representative or to your IBM authorized remarketer.

When you send comments to IBM, you grant IBM a nonexclusive right to use or distribute your comments in any way it believes appropriate without incurring any obligation to you.

If you are mailing a readers' comment form (RCF) from a country other than the United States, you can give the RCF to the local IBM branch office or IBM representative for postage-paid mailing.

- If you prefer to send comments by mail, use the RCF at the back of this document.
- If you prefer to send comments by FAX, use this number: 1-800-254-0206
- If you prefer to send comments electronically, use this network ID: usib2hpd@vnet.ibm.com

Make sure to include the following in your note:

- Title and publication number of this document
- Page number or topic to which your comment applies.

© Copyright IBM Corp. 1984, 2002

Readers' Comments — We'd Like to Hear from You

z/OS Communications Server
SNA Operation
Version 1 Release 4

Publication No. SC31-8779-02

Overall, how satisfied are you with the information in this book?

	Very Satisfied	Satisfied	Neutral	Dissatisfied	Very Dissatisfied
Overall satisfaction	☐	☐	☐	☐	☐

How satisfied are you that the information in this book is:

	Very Satisfied	Satisfied	Neutral	Dissatisfied	Very Dissatisfied
Accurate	☐	☐	☐	☐	☐
Complete	☐	☐	☐	☐	☐
Easy to find	☐	☐	☐	☐	☐
Easy to understand	☐	☐	☐	☐	☐
Well organized	☐	☐	☐	☐	☐
Applicable to your tasks	☐	☐	☐	☐	☐

Please tell us how we can improve this book:

Thank you for your responses. May we contact you? ☐ Yes ☐ No

When you send comments to IBM, you grant IBM a nonexclusive right to use or distribute your comments in any way it believes appropriate without incurring any obligation to you.

Name _____ Address _____

Company or Organization _____

Phone No. _____

Readers' Comments — We'd Like to Hear from You
SC31-8779-02

IBM

Cut or Fold
Along Line

Fold and Tape | **Please do not staple** | Fold and Tape

NO POSTAGE
NECESSARY
IF MAILED IN THE
UNITED STATES

BUSINESS REPLY MAIL

FIRST-CLASS MAIL PERMIT NO. 40 ARMONK, NEW YORK

POSTAGE WILL BE PAID BY ADDRESSEE

IBM Corporation
Software Reengineering
Department G7IA/ Bldg 503
Research Triangle Park, NC
27709-9990

Fold and Tape | **Please do not staple** | Fold and Tape

SC31-8779-02

Cut or Fold
Along Line

Program Number: 5694–A01 and 5655–G52

Printed in U.S.A.

SC31-8779-02

Spine information:

IBM z/OS Communications Server z/OS V1R4.0 CS: SNA Operation Version 1 Release 4