z/OS Communications Server

SNA Messages

Version 1 Release 4

SC31-8790-02

z/OS Communications Server

SNA Messages

Version 1 Release 4

SC31-8790-02

Note:
Before using this information and the product it supports, be sure to read the general information under “Notices” on page 809.

Third Edition (September 2002)

This edition applies to Version 1 Release 4 of z/OS (5694-A01) and Version 1 Release 4 of z/OS.e (5655-G52) and to all subsequent releases and modifications until otherwise indicated in new editions.

Publications are not stocked at the address given below. If you want more IBM® publications, ask your IBM representative or write to the IBM branch office serving your locality.

A form for your comments is provided at the back of this document. If the form has been removed, you may address comments to:

IBM Corporation
Software Reengineering
Department G7IA/ Bldg 503
Research Triangle Park, NC 27709-9990
U.S.A.

If you prefer to send comments electronically, use one of the following methods:

Fax (USA and Canada):
1-800-254-0206

Internet e-mail:
usib2hpd@vnet.ibm.com

World Wide Web:
http://www.ibm.com/servers/eserver/zseries/zos/webqs.html

IBMLink™:
CIBMORCF at RALVM17

IBM Mail Exchange:
tkinlaw@us.ibm.com

When you send information to IBM, you grant IBM a nonexclusive right to use or distribute the information in any way it believes appropriate without incurring any obligation to you.

© Copyright International Business Machines Corporation 1984, 2002. All rights reserved.
US Government Users Restricted Rights – Use, duplication or disclosure restricted by GSA ADP Schedule Contract with IBM Corp.

Contents

Figures vii

Tables ix

About this document xi
Who should use this document xi
Where to find more information xi
Where to find related information on the Internet xi
Accessing z/OS licensed documents on the Internet xii
Using LookAt to look up message explanations xii
How to contact IBM service xiii
z/OS Communications Server information xiii

Summary of changes xxi

Chapter 1. Introduction 1
Message text formats 1
Identifying the source and type of message 1
Responding to a VTAM message 2
Understanding syntax notation in message text 2
Message description format. 3
Message groups and subgroups 3
Message routing 4
Message suppression 4
User-selected message changes 5
Adding the originating module to the message text 5
Changing message characteristics 5
Selecting USS language tables 6
Translating end-user messages 6

Chapter 2. ELM messages for logon manager network operators 7

Chapter 3. IKT messages for TSO/VTAM network operators 17

Chapter 4. IKT messages for TSO/VTAM terminal users 31

Chapter 5. IST messages for VTAM network operators IST001I – IST399I 33

Chapter 6. IST messages for VTAM network operators IST400I – IST799I 117

Chapter 7. IST messages for VTAM network operators IST800I – IST1199I 235

Chapter 8. IST messages for VTAM network operators IST1200I – IST1599I 401

Chapter 9. IST messages for VTAM network operators IST1600I – IST1864I 579

Chapter 10. ISU messages for VTAM network operators 649

Chapter 11. IUT messages for VTAM network operators 667

Chapter 12. IVT messages for VTAM network operators 669

Chapter 13. USS messages 681

© Copyright IBM Corp. 1984, 2002

USS messages sent to the VTAM operator or a program operator 681
USS messages sent to terminal users 681

Chapter 14. Command and RU types in VTAM messages 685
Command and RU descriptions 685

Chapter 15. Node and ID types in VTAM messages 697
Node and ID type descriptions. 697

Appendix A. Message additions and changes 699
Message additions 699
New VTAM Operator Messages 699
Message deletions 700
Message text changes 700
New function message additions and changes 700
CSALIMIT start option 700
EE/SNA Enhancements 701
Improving VTAM INOP Dump Usability. 702
Sysplex Wide Dynamic Source VIPAs for TCP Connections 702
Sysplex Wide Security Assocations 702

Appendix B. Message-flooding prevention 705

Appendix C. Message routing and suppression 707
Message formats 707
Format differences 708
Solicited messages 708
Unsolicited messages 710
Message rerouting and percolation 710
Message rerouting 710
Message percolation 710
Message descriptor codes 711
Message routing codes 712
Message suppression levels 713
Codes and suppression levels 714
ELM messages for Logon Manager 714
IKT messages for TSO/VTAM 714
IST VTAM operator messages 715
ISU VTAM operator messages. 751
IUT VTAM operator messages. 753
IVT VTAM operator messages 754

Appendix D. Messages affected by the MSGLVL option 757
General description 757
Differences between BASE and Version 4 messages 757
Message text for BASE and Version 4 messages 758

Appendix E. Message text for VTAM operator messages 769
Message text for ELM logon manager network operator messages 769
Message text for IKT TSO/VTAM network operator and terminal user messages 770
Message text for IST VTAM operator messages 771
Message text for ISU VTAM operator messages 797
Message text for IUT VTAM operator messages 798
Message text for IVT VTAM operator messages 798

Appendix F. Architectural specifications 801

Appendix G. Information APARs 803
Information APARs for IP documents 803
Information APARs for SNA documents 804
Other information APARs. 804

Appendix H. Accessibility 807
Using assistive technologies 807
Keyboard navigation of the user interface. 807

Notices 809
Trademarks. 812

Communicating Your Comments to IBM 815

Figures

1. Sample message formats 1
2. Sample VTAM message identifier 1
3. Typical route failure 156
4. Sample configuration 629

© Copyright IBM Corp. 1984, 2002

Tables

1. Exceptions for which no dumps are taken 570
2. Message format differences 708
3. Reasons in IST225I (BASE) and IST1137I (V4R1) 758
4. IP information APARs. 803
5. SNA information APARs 804
6. Non-document information APARs 805

© Copyright IBM Corp. 1984, 2002

About this document

This document is intended to help network operators and system programmers in a VTAM® environment understand the meaning of VTAM messages. You can use this document as a reference for specific VTAM messages. For background reading to help understand concepts involved in VTAM operations and for examples of message output for a variety of DISPLAY commands, refer to *z/OS Communications Server: SNA Operation*.

This document supports z/OS.e™.

Who should use this document

This document is for network operators, system programmers, or anyone required to interpret a VTAM message. Familiarity with VTAM concepts and terms is assumed.

Where to find more information

This section contains:

- Pointers to information available on the Internet
- Information about licensed documentation
- Information about LookAt, the online message tool
- A set of tables that describes the documents in the z/OS™ Communications Server (z/OS CS) library, along with related publications

Where to find related information on the Internet

z/OS

– http://www.ibm.com/servers/eserver/zseries/zos/

z/OS Internet Library

– http://www.ibm.com/servers/eserver/zseries/zos/bkserv/

IBM Communications Server product

– http://www.software.ibm.com/network/commserver/

IBM Communications Server product support

– http://www.software.ibm.com/network/commserver/support/

IBM Systems Center publications

– http://www.redbooks.ibm.com/

IBM Systems Center flashes

– http://www-1.ibm.com/support/techdocs/atsmastr.nsf

RFCs

– http://www.ietf.org/rfc.html

RFC drafts

– http://www.ietf.org/ID.html

Information about Web addresses can also be found in information APAR II11334.

DNS web sites

For more information about DNS, see the following USENET news groups and mailing:

© Copyright IBM Corp. 1984, 2002

USENET news groups:
comp.protocols.dns.bind

For BIND mailing lists, see:

- http://www.isc.org/ml-archives/
  - BIND Users
    - Subscribe by sending mail to bind-users-request@isc.org.
    - Submit questions or answers to this forum by sending mail to bind-users@isc.org.
  - BIND 9 Users (Note: This list may not be maintained indefinitely.)
    - Subscribe by sending mail to bind9-users-request@isc.org.
    - Submit questions or answers to this forum by sending mail to bind9-users@isc.org.

For definitions of the terms and abbreviations used in this document, you can view or download the latest *IBM Glossary of Computing Terms* at the following Web address:

http://www.ibm.com/ibm/terminology

Note: Any pointers in this publication to Web sites are provided for convenience only and do not in any manner serve as an endorsement of these Web sites.

Accessing z/OS licensed documents on the Internet

z/OS licensed documentation is available on the Internet in PDF format at the IBM Resource Link™ Web site at:

`http://www.ibm.com/servers/resourcelink`

Licensed documents are available only to customers with a z/OS license. Access to these documents requires an IBM Resource Link user ID and password, and a key code. With your z/OS order you received a Memo to Licensees, (GI10-0671), that includes this key code.

To obtain your IBM Resource Link user ID and password, log on to:

`http://www.ibm.com/servers/resourcelink`

To register for access to the z/OS licensed documents:

1. Sign in to Resource Link using your Resource Link user ID and password.
2. Select **User Profiles** located on the left-hand navigation bar.

Note: You cannot access the z/OS licensed documents unless you have registered for access to them and received an e-mail confirmation informing you that your request has been processed.

Printed licensed documents are not available from IBM.

You can use the PDF format on either **z/OS Licensed Product Library CD-ROM** or IBM Resource Link to print licensed documents.

Using LookAt to look up message explanations

LookAt is an online facility that allows you to look up explanations for most messages you encounter, as well as for some system abends and codes. Using LookAt to find information is faster than a conventional search because in most cases LookAt goes directly to the message explanation.

You can access LookAt from the Internet at:

`http://www.ibm.com/eserver/zseries/zos/bkserv/lookat/`

or from anywhere in z/OS where you can access a TSO/E command line (for example, TSO/E prompt, ISPF, z/OS UNIX System Services running OMVS). You can also download code from the *z/OS Collection* (SK3T-4269) and the LookAt Web site that will allow you to access LookAt from a handheld computer (Palm Pilot VIIx suggested).

To use LookAt as a TSO/E command, you must have LookAt installed on your host system. You can obtain the LookAt code for TSO/E from a disk on your *z/OS Collection* (SK3T-4269) or from the **News** section on the LookAt Web site.

Some messages have information in more than one document. For those messages, LookAt displays a list of documents in which the message appears.

How to contact IBM service

For immediate assistance, visit this Web site:
http://www.software.ibm.com/network/commserver/support/

Most problems can be resolved at this Web site, where you can submit questions and problem reports electronically, as well as access a variety of diagnosis information.

For telephone assistance in problem diagnosis and resolution (in the United States or Puerto Rico), call the IBM Software Support Center anytime (1-800-237-5511). You will receive a return call within 8 business hours (Monday – Friday, 8:00 a.m. – 5:00 p.m., local customer time).

Outside of the United States or Puerto Rico, contact your local IBM representative or your authorized IBM supplier.

If you would like to provide feedback on this publication, see “Communicating Your Comments to IBM” on page 815.

z/OS Communications Server information

This section contains descriptions of the documents in the z/OS Communications Server library.

z/OS Communications Server publications are available:

- Online at the z/OS Internet Library web page at http://www.ibm.com/servers/eserver/zseries/zos/bkserv
- In softcopy on CD-ROM collections.

Softcopy information

Softcopy publications are available in the following collections:

Titles	Order Number	Description
z/OS V1R4 Collection	SK3T-4269	This is the CD collection shipped with the z/OS product. It includes the libraries for z/OS V1R4, in both BookManager® and PDF formats.

Titles	Order Number	Description
z/OS Software Products Collection	SK3T-4270	This CD includes, in both BookManager and PDF formats, the libraries of z/OS software products that run on z/OS but are not elements and features, as well as the *Getting Started with Parallel Sysplex®* bookshelf.
z/OS V1R4 and Software Products DVD Collection	SK3T-4271	This collection includes the libraries of z/OS (the element and feature libraries) and the libraries for z/OS software products in both BookManager and PDF format. This collection combines SK3T-4269 and SK3T-4270.
z/OS Licensed Product Library	SK3T-4307	This CD includes the licensed documents in both BookManager and PDF format.
System Center Publication IBM S/390® Redbooks™ Collection	SK2T-2177	This collection contains over 300 ITSO redbooks that apply to the S/390 platform and to host networking arranged into subject bookshelves.

z/OS Communications Server library

z/OS V1R4 Communications Server documents are available on the CD-ROM accompanying z/OS (SK3T-4269 or SK3T-4307). Unlicensed documents can be viewed at the z/OS Internet library site.

Updates to documents are available on RETAIN® and in information APARs (info APARs). See Appendix G, “Information APARs” on page 803 for a list of the documents and the info APARs associated with them.

- Info APARs for OS/390® documents are in the document called *OS/390 DOC APAR and PTF ++HOLD Documentation* which can be found at http://publibz.boulder.ibm.com/cgi-bin/bookmgr_OS390/BOOKS/IDDOCMST/CCONTENTS.
- Info APARs for z/OS documents are in the document called *z/OS and z/OS.e DOC APAR and PTF ++HOLD Documentation* which can be found at http://publibz.boulder.ibm.com:80/cgi-bin/bookmgr_OS390/BOOKS/ZIDOCMST/CCONTENTS.

Planning and migration:

Title	Number	Description
z/OS Communications Server: SNA Migration	GC31-8774	This document is intended to help you plan for SNA, whether you are migrating from a previous version or installing SNA for the first time. This document also identifies the optional and required modifications needed to enable you to use the enhanced functions provided with SNA.
z/OS Communications Server: IP Migration	GC31-8773	This document is intended to help you plan for TCP/IP Services, whether you are migrating from a previous version or installing IP for the first time. This document also identifies the optional and required modifications needed to enable you to use the enhanced functions provided with TCP/IP Services.
z/OS Communications Server: IPv6 Network and Application Design Guide	SC31-8885	This document is a high-level introduction to IPv6. It describes concepts of z/OS Communications Server’s support of IPv6, coexistence with IPv4, and migration issues.

Resource definition, configuration, and tuning:

Title	Number	Description
z/OS Communications Server: IP Configuration Guide	SC31-8775	This document describes the major concepts involved in understanding and configuring an IP network. Familiarity with the z/OS operating system, IP protocols, z/OS UNIX® System Services, and IBM Time Sharing Option (TSO) is recommended. Use this document in conjunction with the *z/OS Communications Server: IP Configuration Reference*.
z/OS Communications Server: IP Configuration Reference	SC31-8776	This document presents information for people who want to administer and maintain IP. Use this document in conjunction with the *z/OS Communications Server: IP Configuration Guide*. The information in this document includes: • TCP/IP configuration data sets • Configuration statements • Translation tables • SMF records • Protocol number and port assignments
z/OS Communications Server: SNA Network Implementation Guide	SC31-8777	This document presents the major concepts involved in implementing an SNA network. Use this document in conjunction with the *z/OS Communications Server: SNA Resource Definition Reference*.
z/OS Communications Server: SNA Resource Definition Reference	SC31-8778	This document describes each SNA definition statement, start option, and macroinstruction for user tables. It also describes NCP definition statements that affect SNA. Use this document in conjunction with the *z/OS Communications Server: SNA Network Implementation Guide*.
z/OS Communications Server: SNA Resource Definition Samples	SC31-8836	This document contains sample definitions to help you implement SNA functions in your networks, and includes sample major node definitions.
z/OS Communications Server: AnyNet SNA over TCP/IP	SC31-8832	This guide provides information to help you install, configure, use, and diagnose SNA over TCP/IP.
z/OS Communications Server: AnyNet Sockets over SNA	SC31-8831	This guide provides information to help you install, configure, use, and diagnose sockets over SNA. It also provides information to help you prepare application programs to use sockets over SNA.
z/OS Communications Server: IP Network Print Facility	SC31-8833	This document is for system programmers and network administrators who need to prepare their network to route SNA, JES2, or JES3 printer output to remote printers using TCP/IP Services.

Operation:

Title	Number	Description
z/OS Communications Server: IP User's Guide and Commands	SC31-8780	This document describes how to use TCP/IP applications. It contains requests that allow a user to log on to a remote host using Telnet, transfer data sets using FTP, send and receive electronic mail, print on remote printers, and authenticate network users.
z/OS Communications Server: IP System Administrator's Commands	SC31-8781	This document describes the functions and commands helpful in configuring or monitoring your system. It contains system administrator's commands, such as TSO NETSTAT, PING, TRACERTE and their UNIX counterparts. It also includes TSO and MVS™ commands commonly used during the IP configuration process.

Title	Number	Description
z/OS Communications Server: SNA Operation	SC31-8779	This document serves as a reference for programmers and operators requiring detailed information about specific operator commands.
z/OS Communications Server: Quick Reference	SX75-0124	This document contains essential information about SNA and IP commands.

Customization:

Title	Number	Description
z/OS Communications Server: SNA Customization	LY43-0092	This document enables you to customize SNA, and includes the following: • Communication network management (CNM) routing table • Logon-interpret routine requirements • Logon manager installation-wide exit routine for the CLU search exit • TSO/SNA installation-wide exit routines • SNA installation-wide exit routines

Writing application programs:

Title	Number	Description
z/OS Communications Server: IP Application Programming Interface Guide	SC31-8788	This document describes the syntax and semantics of program source code necessary to write your own application programming interface (API) into TCP/IP. You can use this interface as the communication base for writing your own client or server application. You can also use this document to adapt your existing applications to communicate with each other using sockets over TCP/IP.
z/OS Communications Server: IP CICS Sockets Guide	SC31-8807	This document is for programmers who want to set up, write application programs for, and diagnose problems with the socket interface for CICS® using z/OS TCP/IP.
z/OS Communications Server: IP IMS Sockets Guide	SC31-8830	This document is for programmers who want application programs that use the IMS™ TCP/IP application development services provided by IBM's TCP/IP Services.
z/OS Communications Server: IP Programmer's Reference	SC31-8787	This document describes the syntax and semantics of a set of high-level application functions that you can use to program your own applications in a TCP/IP environment. These functions provide support for application facilities, such as user authentication, distributed databases, distributed processing, network management, and device sharing. Familiarity with the z/OS operating system, TCP/IP protocols, and IBM Time Sharing Option (TSO) is recommended.
z/OS Communications Server: SNA Programming	SC31-8829	This document describes how to use SNA macroinstructions to send data to and receive data from (1) a terminal in either the same or a different domain, or (2) another application program in either the same or a different domain.
z/OS Communications Server: SNA Programmer's LU 6.2 Guide	SC31-8811	This document describes how to use the SNA LU 6.2 application programming interface for host application programs. This document applies to programs that use only LU 6.2 sessions or that use LU 6.2 sessions along with other session types. (Only LU 6.2 sessions are covered in this document.)

Title	Number	Description
z/OS Communications Server: SNA Programmer's LU 6.2 Reference	SC31-8810	This document provides reference material for the SNA LU 6.2 programming interface for host application programs.
z/OS Communications Server: CSM Guide	SC31-8808	This document describes how applications use the communications storage manager.
z/OS Communications Server: CMIP Services and Topology Agent Guide	SC31-8828	This document describes the Common Management Information Protocol (CMIP) programming interface for application programmers to use in coding CMIP application programs. The document provides guide and reference information about CMIP services and the SNA topology agent.

Diagnosis:

Title	Number	Description
z/OS Communications Server: IP Diagnosis	GC31-8782	This document explains how to diagnose TCP/IP problems and how to determine whether a specific problem is in the TCP/IP product code. It explains how to gather information for and describe problems to the IBM Software Support Center.
z/OS Communications Server: SNA Diagnosis Vol 1, Techniques and Procedures and *z/OS Communications Server: SNA Diagnosis Vol 2, FFST Dumps and the VIT*	LY43-0088 LY43-0089	These documents help you identify an SNA problem, classify it, and collect information about it before you call the IBM Support Center. The information collected includes traces, dumps, and other problem documentation.
z/OS Communications Server: SNA Data Areas Volume 1 and *z/OS Communications Server: SNA Data Areas Volume 2*	LY43-0090 LY43-0091	These documents describe SNA data areas and can be used to read an SNA dump. They are intended for IBM programming service representatives and customer personnel who are diagnosing problems with SNA.

Messages and codes:

Title	Number	Description
z/OS Communications Server: SNA Messages	SC31-8790	This document describes the ELM, IKT, IST, ISU, IUT, IVT, and USS messages. Other information in this document includes: • Command and RU types in SNA messages • Node and ID types in SNA messages • Supplemental message-related information
z/OS Communications Server: IP Messages Volume 1 (EZA)	SC31-8783	This volume contains TCP/IP messages beginning with EZA.
z/OS Communications Server: IP Messages Volume 2 (EZB)	SC31-8784	This volume contains TCP/IP messages beginning with EZB.
z/OS Communications Server: IP Messages Volume 3 (EZY)	SC31-8785	This volume contains TCP/IP messages beginning with EZY.
z/OS Communications Server: IP Messages Volume 4 (EZZ-SNM)	SC31-8786	This volume contains TCP/IP messages beginning with EZZ and SNM.
z/OS Communications Server: IP and SNA Codes	SC31-8791	This document describes codes and other information that appear in z/OS Communications Server messages.

APPC Application Suite:

Title	Number	Description
z/OS Communications Server: APPC Application Suite User's Guide	SC31-8809	This documents the end-user interface (concepts, commands, and messages) for the AFTP, ANAME, and APING facilities of the APPC application suite. Although its primary audience is the end user, administrators and application programmers may also find it useful.
z/OS Communications Server: APPC Application Suite Administration	SC31-8835	This document contains the information that administrators need to configure the APPC application suite and to manage the APING, ANAME, AFTP, and A3270 servers.
z/OS Communications Server: APPC Application Suite Programming	SC31-8834	This document provides the information application programmers need to add the functions of the AFTP and ANAME APIs to their application programs.

Redbooks

The following Redbooks may help you as you implement z/OS Communications Server.

Title	Number
TCP/IP Tutorial and Technical Overview	GG24–3376
SNA and TCP/IP Integration	SG24–5291
IBM Communications Server for OS/390 V2R10 TCP/IP Implementation Guide: Volume 1: Configuration and Routing	SG24–5227
IBM Communications Server for OS/390 V2R10 TCP/IP Implementation Guide: Volume 2: UNIX Applications	SG24–5228
IBM Communications Server for OS/390 V2R7 TCP/IP Implementation Guide: Volume 3: MVS Applications	SG24–5229
Secureway Communications Server for OS/390 V2R8 TCP/IP: Guide to Enhancements	SG24–5631
TCP/IP in a Sysplex	SG24–5235
Managing OS/390 TCP/IP with SNMP	SG24–5866
Security in OS/390–based TCP/IP Networks	SG24–5383
IP Network Design Guide	SG24–2580
Migrating Subarea Networks to an IP Infrastructure	SG24–5957
IBM Communication Controller Migration Guide	SG24–6298

Related information

For information about z/OS products, refer to *z/OS Information Roadmap* (SA22-7500). The Roadmap describes what level of documents are supplied with each release of z/OS Communications Server, as well as describing each z/OS publication.

Relevant RFCs are listed in an appendix of the IP documents. Architectural specifications for the SNA protocol are listed in an appendix of the SNA documents.

The table below lists documents that may be helpful to readers.

Title	Number
z/OS Security Server Firewall Technologies	SC24-5922
S/390: OSA-Express Customer's Guide and Reference	SA22-7403

Title	Number
z/OS JES2 Initialization and Tuning Guide	SA22-7532
z/OS MVS Diagnosis: Procedures	GA22-7587
z/OS MVS Diagnosis: Reference	GA22-7588
z/OS MVS Diagnosis: Tools and Service Aids	GA22-7589
z/OS Security Server LDAP Client Programming	SC24-5924
z/OS Security Server LDAP Server Administration and Use	SC24-5923
Understanding LDAP	SG24-4986
z/OS UNIX System Services Programming: Assembler Callable Services Reference	SA22-7803
z/OS UNIX System Services Command Reference	SA22-7802
z/OS UNIX System Services User's Guide	SA22-7801
z/OS UNIX System Services Planning	GA22-7800
z/OS MVS Using the Subsystem Interface	SA22-7642
z/OS C/C++ Run-Time Library Reference	SA22-7821
z/OS Program Directory	GI10-0670
DNS and BIND, Fourth Edition, O'Reilly and Associates, 2001	ISBN 0-596-00158-4
Routing in the Internet , Christian Huitema (Prentice Hall PTR, 1995)	ISBN 0-13-132192-7
sendmail, Bryan Costales and Eric Allman, O'Reilly and Associates, 1997	ISBN 156592–222–0
TCP/IP Tutorial and Technical Overview	GG24-3376
TCP/IP Illustrated, Volume I: The Protocols, W. Richard Stevens, Addison-Wesley Publishing, 1994	ISBN 0-201-63346-9
TCP/IP Illustrated, Volume II: The Implementation, Gary R. Wright and W. Richard Stevens, Addison-Wesley Publishing, 1995	ISBN 0-201-63354-X
TCP/IP Illustrated, Volume III, W. Richard Stevens, Addison-Wesley Publishing, 1995	ISBN 0-201-63495-3
z/OS System Secure Sockets Layer Programming	SC24-5901

Determining if a publication is current

As needed, IBM updates its publications with new and changed information. For a given publication, updates to the hardcopy and associated BookManager softcopy are usually available at the same time. Sometimes, however, the updates to hardcopy and softcopy are available at different times. The following information describes how to determine if you are looking at the most current copy of a publication:

- At the end of a publication's order number there is a dash followed by two digits, often referred to as the dash level. A publication with a higher dash level is more current than one with a lower dash level. For example, in the publication order number GC28-1747-07, the dash level 07 means that the publication is more current than previous levels, such as 05 or 04.
- If a hardcopy publication and a softcopy publication have the same dash level, it is possible that the softcopy publication is more current than the hardcopy publication. Check the dates shown in the Summary of Changes. The softcopy publication might have a more recently dated Summary of Changes than the hardcopy publication.
- To compare softcopy publications, you can check the last two characters of the publication's filename (also called the book name). The higher the number, the

more recent the publication. Also, next to the publication titles in the CD-ROM booklet and the readme files, there is an asterisk (*) that indicates whether a publication is new or changed.

Summary of changes

Summary of changes
for SC31-8790-02
z/OS Version 1 Release 4

This document contains information previously presented in SC31-8790-01, which supports z/OS Version 1 Release 2.

New information

- IST1823I–1839I
- IST1841I–1867I

An appendix that provides a list of documents that contain architectural specifications for the SNA protocol has been added.

An appendix with z/OS product accessibility information has been added.

Changed information

- IST1112I
- IST1480I
- IST1488I

Deleted Information

- IST1620I

This document contains terminology, maintenance, and editorial changes. Technical changes or additions to the text and illustrations are indicated by a vertical line to the left of the change.

Starting with z/OS V1R4, you may notice changes in the style and structure of some content in this document (for example, headings that use uppercase for the first letter of initial words only, and procedures that have a different look and format). The changes are ongoing improvements to the consistency and retrievability of information in our documents.

This document supports z/OS.e.

Summary of Changes
for SC31-8790-01
z/OS Version 1 Release 2

This document contains information previously presented in SC31-8790-00, which supports z/OS Version 1 Release 1.

New Information

- Added messages IST1450I, IST1451I and IST1763I through IST1822I

Deleted Information

- Deleted message IST432I

© Copyright IBM Corp. 1984, 2002

This document contains terminology, maintenance, and editorial changes. Technical changes or additions to the text and illustrations are indicated by a vertical line to the left of the change.

Summary of Changes
for SC31-8790-00
z/OS Version 1 Release 1

This document contains information also presented in *OS/390 V2R10 IBM Communications Server: SNA Messages*.

Chapter 1. Introduction

This chapter describes:

- “Message text formats”
- “Message description format” on page 3
- “Message groups and subgroups” on page 3
- “Message routing” on page 4
- “Message suppression” on page 4
- “User-selected message changes” on page 5

Message text formats

Most VTAM messages are preceded by an identifier, as seen in Figure 1. Unformatted system services (USS) messages that have been coded by the user might or might not have identifiers.

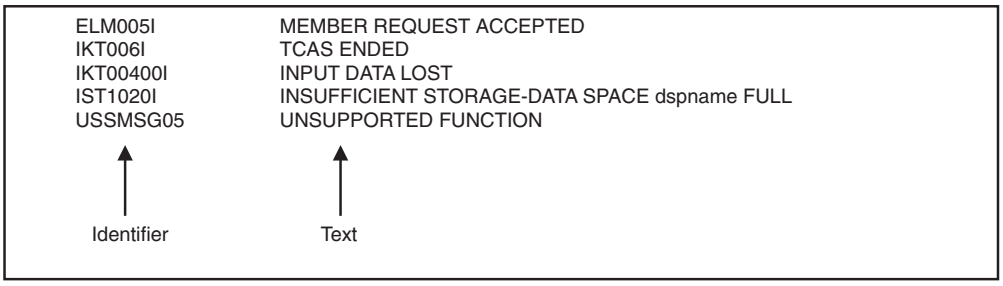

Figure 1. Sample message formats

See Appendix C, “Message routing and suppression” on page 707 for additional information on message formats and message format differences.

Identifying the source and type of message

All message identifiers include the following:

- Prefix
- Message number
- Message type code

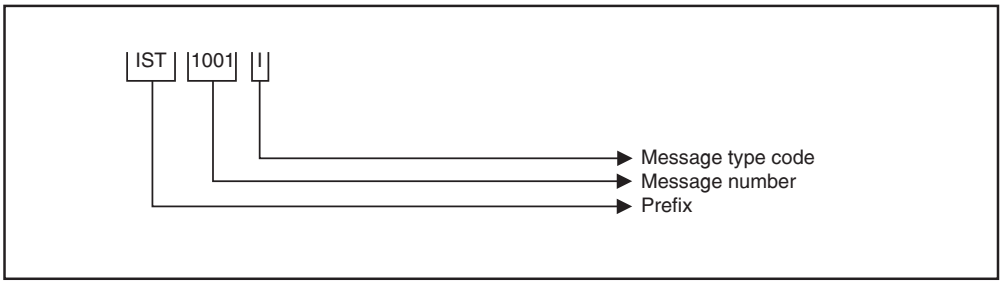

Figure 2. Sample VTAM message identifier

Prefix

Message identifiers include a prefix that identifies the source of the message.

Prefix	Source
ELM	Logon manager messages

© Copyright IBM Corp. 1984, 2002

IKT TSO/VTAM messages
IST VTAM network operator messages
ISU Sockets-over-SNA network operator messages
IUT MPC connection manager messages
IVT Communications Storage Manager (CSM) messages
USS Unformatted system services messages

Message number

Message identifiers include a unique 2- to 5-digit message number.

Message type code

The following type codes are used in VTAM messages:

I Information:
The message is for your information. This type code may be used to notify you of an error. No response is necessary, but actions may be recommended.

A Action:
The system is waiting for you to respond. For information on how to respond to VTAM operator messages, see “Responding to a VTAM message”.

E Eventual Action:
You must eventually take some action to correct a problem. The system continues processing without waiting for your response.

The following message type code is used only in IKT messages for TSO/VTAM network operators:

D Decision:
You must decide among several alternatives.

Responding to a VTAM message

The format of your response to a VTAM message, such as IST095A, is operating system dependent.

The response format for MVS and an example follow:

Format	Example
r (reply ID),(response)	r 6,YES

Enter the following to display the reply ID:
d r,r

You may be able to customize the response format. See your operating system documentation for additional information.

Understanding syntax notation in message text

In this document, VTAM messages are described using the following syntax notation:

UPPERCASE CHARACTERS
Represent the actual text of the message.

italic characters
Represent message variables. The variables are replaced by their values in the actual message.

Braces { }
Represent a group of text strings, only one of which appears in the actual message. The text strings are separated by or-signs (|) within the braces.

The braces and or-signs do not appear in the actual message.

Brackets [ ]
Represent optional messages or optional parts of a message. Optional messages or optional parts of a message appear only under certain circumstances which are described in the explanation of the message. If there is more than one possible value for an optional part, or-signs (|) separate the possibilities.

The brackets and or-signs do not appear in the actual message.

Message description format

Messages are described using five categories. Not all categories are used for each message. For messages that are always issued as a group, the explanation of the first message usually contains a complete description of the other messages in the group.

Explanation
Explains why VTAM issued the message and describes all text and variables in the message.

System Action
Explains the state of VTAM or the operating system after VTAM issues the message. This section also indicates whether the system is waiting for a reply.

Operator Response
Describes actions that the operator can or should take at the console.

Programmer Response
Suggests actions, programming changes, or system definition changes that isolate or correct errors or improve the efficiency of the system.

User Response (USS Messages only)
Describes actions that the user can or should take at the terminal.

Message groups and subgroups

Message Groups
A message group contains two or more messages that are displayed together in response to a specific command or error condition. An example of a message group follows:

```
IST1188I  VTAM level STARTED AT time ON date
IST1349I  COMPONENT ID IS dddd-ddddd-ddd
IST1348I  VTAM STARTED AS nodetype
IST1189I  option = current_value [option = current_value]
:
IST314I  END
```

In most cases, the explanation of the first message in the group contains an example of the group and information about all messages in the group. The message descriptions of members of the group refer back to the first message for complete information.

Message groups that are in response to DISPLAY commands are an exception. For these groups, each individual message within the group usually contains a

complete message description. See *z/OS Communications Server: SNA Operation* for examples of these types of groups.

Message Subgroups

A message subgroup is two or more messages that are displayed together in response to a specific command or error condition. The major differences between a group and a subgroup are that a subgroup is always displayed within a larger group, and one message in the subgroup is never displayed without the other.

Some subgroups are optional parts of the group, and this is indicated by the use of brackets at the beginning and end of the subgroup. Subgroups can also be repeated, and this is indicated by three vertical dots following the last message in the subgroup.

An example follows:

```
IST951I   DISPLAY DISK INFORMATION FOR ncpname
[IST957I  NO NCP LOAD MODULE OR DUMP ON DISK]
[IST952I  DUMP NAME     DATE      TIME
IST953I   dumpname      date      time]
⋮
[IST954I  LOAD MODULE   DATE     TIME   STORE STATUS  [ACTIVE]
IST955I   loadmodname   date     time
status     [YES|NO]]
⋮
[IST924I  -------------------------------------------------------]
[IST1065I LOAD MODULE  REQUESTED IPL  ESTIMATED IPL
IST1066I  load_module  requested_time
estimated_time]
⋮
IST965I   AUTO DUMP/LOAD:  {YES|NO}
IST314I   END
```

In this example, there are three subgroups within the group headed by IST951I:

IST952I and IST953I
IST954I and IST955I
IST1065I and IST1066I

These subgroups are always displayed within the larger IST951I group.

Message routing

See Appendix C, “Message routing and suppression” on page 707 for information on message routing.

For an explanation of message percolation and a list of percolated VTAM operator messages, see “Message rerouting and percolation” on page 710.

Message suppression

For information on message suppression levels, see “Message suppression levels” on page 713.

For an explanation of suppression rules for message-flooding prevention and an example of message suppression, see the *z/OS Communications Server: SNA Resource Definition Reference*.

User-selected message changes

The messages that VTAM issues appear exactly as listed in this document unless:

- You have added the name of the VTAM module to the message text by using the MSGMOD start option or the MODIFY VTAMOPTS or MODIFY MSGMOD command.
- You have changed the message text or other message characteristics.
- You have translated messages using the LANGTAB USS tables or the MVS Message Service (MMS).

Adding the originating module to the message text

You can add the name of the VTAM module that issued the message to the message text. This can be done by using the MSGMOD start option when VTAM is started or by entering the MODIFY VTAMOPTS or MODIFY MSGMOD command.

If you specify MSGMOD=YES, the last 5 characters of the name of the VTAM module that issued the message are inserted into each VTAM message between the message identifier and the message text.

For example:

- If you specify MSGMOD=NO, message IST285I will appear as follows:
  IST285I *dumptype* **DUMP OF** *resourcename status*
- If you specify MSGMOD=YES, message IST285I will appear as follows:
  IST285I INFXI *dumptype* **DUMP OF** *resourcename status*

  VTAM module ISTINFXI issued the message.

Note: If you specify MSGMOD=YES, some VTAM messages may be truncated on the right. Significant information may be lost if this occurs.

The MSGMOD start option is described in the *z/OS Communications Server: SNA Resource Definition Reference*. See *z/OS Communications Server: SNA Operation* for information on the MODIFY VTAMOPTS and MODIFY MSGMOD commands.

Changing message characteristics

You can change the following VTAM message characteristics:

- Descriptor codes
- Message text
- Routing codes
- Suppression level
- Suppression of extra blanks

See Appendix C, “Message routing and suppression” on page 707 for information on message descriptor codes, message routing codes, and message suppression levels. See Appendix B, “Message-flooding prevention” on page 705 for information on message flooding prevention.

For additional information on changing other message characteristics, see the description of the USS macro in the *z/OS Communications Server: SNA Resource Definition Reference*.

Selecting USS language tables

End users can select a USS table at the time a USS command is entered. This table, selected with the LANGTAB operand on USS commands, takes priority over standard USS tables when messages are issued. This allows the end user to select a language of choice for USS messages.

See the *z/OS Communications Server: SNA Network Implementation Guide* for additional information. For more information on the LANGTAB operand, see the *z/OS Communications Server: SNA Resource Definition Reference*.

Translating end-user messages

End users can select a language to be used to translate USS and TSO/VTAM end-user messages using the MVS Message Service (MMS). This language is selected using the LANG operand on USS commands.

See the *z/OS Communications Server: SNA Network Implementation Guide* for more information. For more information on the LANG operand, see the *z/OS Communications Server: SNA Resource Definition Reference*.

Chapter 2. ELM messages for logon manager network operators

This chapter lists logon manager messages that can appear on a network operator's console.

See the *z/OS Communications Server: SNA Network Implementation Guide* for information on logon manager.

ELM001I REDEFINITION COMPLETE

Explanation: The logon manager MODIFY MEMBER command was entered. The new configuration definition is now in effect.

System Action: Processing continues.

Operator Response: None.

Programmer Response: None.

ELM002I LOGON MANAGER INITIALIZATION COMPLETED

Explanation: The logon manager is prepared to accept requests.

System Action: Processing continues.

Operator Response: None.

Programmer Response: None.

ELM003I NO SUBAREAS DETECTED IN CONFIGURATION DEFINITION

Explanation: The logon manager MODIFY MEMBER command was entered. The logon manager input data set contains no subarea definition records. The logon manager requires subarea definitions to process requests.

System Action: The redefinition request is processed, and an empty subarea configuration takes effect.

Operator Response: Reenter a logon manager MODIFY MEMBER command specifying a data set that contains a valid subarea configuration.

Programmer Response: Correct the configuration-definition data set member adding required subarea definition records.

ELM004I REDEFINITION IN PROGRESS — COMMAND QUEUED

Explanation: An operator command was entered during logon manager redefinition.

System Action: The command is queued for later processing.

Operator Response: None.

Programmer Response: None.

ELM005I MEMBER REQUEST ACCEPTED

Explanation: The logon manager MODIFY MEMBER command entered by the operator was accepted by the logon manager.

System Action: Processing continues.

Operator Response: None.

Programmer Response: None.

© Copyright IBM Corp. 1984, 2002

ELM006I REDEFINITION IN PROGRESS

Explanation: The configuration specified by the logon manager MODIFY MEMBER command is being processed. Subarea distance and index tables are updated for all subtasks.

System Action: Processing continues.

Operator Response: None.

Programmer Response: None.

ELM007I REDEFINITION UNSUCCESSFUL

Explanation: Logon manager redefinition failed.

System Action: Processing continues with the previous configuration definition.

Operator Response: Save the system log for problem determination.

Programmer Response: Use the information issued in ELM017I, ELM020I, or ELM021I to correct the problem.

ELM008I REPLY TRUNCATED

Explanation: The response to a logon manager MODIFY HELP or logon manager MODIFY INFO command is incomplete because of a buffer shortage.

System Action: Processing continues.

Operator Response: Reenter the command. If the condition persists, save the system log for problem determination.

Programmer Response: If necessary, increase the number of buffers by configuration definition.

ELM009I STOP REQUEST ACCEPTED

Explanation: A logon manager MODIFY STOP command entered by an operator was accepted.

System Action: Termination processing begins.

Operator Response: None.

Programmer Response: None.

ELM010I INFO REQUEST ACCEPTED

Explanation: A logon manager MODIFY INFO command entered by an operator was accepted by the logon manager.

System Action: Processing continues.

Operator Response: None.

Programmer Response: None.

ELM011I MINLINK REQUEST ACCEPTED

Explanation: A logon manager MODIFY MINLINK command entered by an operator was accepted by the logon manager.

System Action: Processing continues.

Operator Response: None.

Programmer Response: None.

ELM012I SELECTED RESOURCE NOT FOUND

Explanation: An operator command was entered that specified a resource not known to the logon manager.

System Action: Processing continues.

Operator Response: Reenter the command, specifying a valid resource.

Programmer Response: None.

ELM013I MINLINK REQUEST COMPLETED

Explanation: A logon manager MODIFY MINLINK command was completed.

System Action: Processing continues.

Operator Response: None.

Programmer Response: None.

ELM014I NAME: TYP: STATUS: CURRENT: CONTROL: REASON: INITS:

Explanation: This message is the first in a group of messages in response to a logon manager MODIFY INFO command. A complete description of the message group follows.

```
ELM014I  NAME: TYP: STATUS: CURRENT:     CONTROL:     REASON: INITS:
ELM040I  name  type status  curop=curcnt conop=concnt reason  inits
```

name indicates the name of the resource.

type indicates the type of the resource and is either an application (**APPL**) or channel-attached control point LU (**CLU**).

status indicates the status of the resource and can be one of the following:

ACTIVE
: Active

INACTIVE
: Inactive

PENDACTV
: Pending active

PENDINAC
: Pending inactive

If *type* is **APPL**,
curop is link count (**LNKCNT**).
curcnt is the number of CLUs that support (handle session initiations for) application *name*.
conop is minimum link count (**MINLNK**).
concnt is the smallest link count at which application *name* remains active.

If *type* is **CLU**,
curop is session count (**SESCNT**).
curcnt is the number of sessions initiated across CLU *name* as reported by the CLU.
conop is session limit (**SESLMT**).
concnt is the largest number of sessions that may be initiated across CLU *name*.

reason indicates the reason for the current status of the resource (when known).

inits indicates the number of session initiations sent to application *name* or across CLU *name* as determined by the logon manager.

System Action: Processing continues.

Operator Response: None.

Programmer Response: None.

ELM015I NO PENDING RESOURCES FOUND

Explanation: A logon manager MODIFY INFO command for pending resources was completed. No resources were found in the pending state.

System Action: Processing continues.

Operator Response: None.

Programmer Response: None.

ELM016I LOGON MANAGER CLOSEDOWN COMPLETED

Explanation: Logon manager termination completed.

System Action: Logon manager session is completed and control returns to MVS.

Operator Response: None.

Programmer Response: None.

ELM017I REQUIRED STORAGE UNAVAILABLE

Explanation: An operator command was entered that required the logon manager to acquire additional storage.

System Action: If the condition occurs during logon manager initialization, initialization fails and ELM110I is issued. Otherwise, the logon manager continues processing.

Operator Response: If the logon manager continues processing, retry the operation.

Programmer Response: Respond to MVS messages for a storage shortage. A larger region may be required.

ELM018I SA RECORD CAUSES MAXSUBA PARAMETER TO BE EXCEEDED

Explanation: The logon manager MODIFY MEMBER command was entered. The number of unique or adjacent subareas encountered in the system-definition data set exceeds the number specified in the MAXSUBA parameter at system startup.

System Action: The SA record is ignored and processing continues.

Operator Response: Save the system log for problem determination.

Programmer Response: Ensure that the subarea configuration in the specified member is consistent with the job-step parameters. Adjust the MAXSUBA parameter if necessary.

ELM019I LMAPPL RECORD CAUSES MAXAPLC VALUE TO BE EXCEEDED

Explanation: The logon manager MODIFY MEMBER command was entered. The number of applications defined in the LMAPPL statement exceeds either the default value or the value specified in the MAXAPLC statement.

System Action: The LMAPPL record is processed. Storage fragmentation may result.

Operator Response: Save the system log for problem determination.

Programmer Response: Adjust the MAXAPLC value in the specified member.

ELM020I UNABLE TO ACCESS CONFIGURATION DEFINITION DATA SET MEMBER

Explanation: A logon manager MODIFY MEMBER command was entered. Either data set ELMDEFDS could not be opened, or the member specified could not be found in the data set.

System Action: Processing continues with the previous configuration definition.

Operator Response: Save the system log for problem determination.

Programmer Response: Validate the data-set name associated with data set ELMDEFDS and the member specified in the command.

ELM021I ERROR ENCOUNTERED IN READING CONFIGURATION DEFINITION DATA SET MEMBER

Explanation: The logon manager MODIFY MEMBER command was entered. A READ error was encountered while processing the member.

System Action: Processing continues with the previous configuration definition.

Operator Response: Save the system log for problem determination.

Programmer Response: Check the integrity of the data set ELMDEFDS.

ELM022I HELP REQUEST ACCEPTED

Explanation: A logon manager MODIFY HELP command was accepted by the logon manager.

System Action: Processing continues.

Operator Response: None.

Programmer Response: None.

ELM023I VALID COMMAND PARAMETERS ARE:

Explanation: This is the first message of the HELP message group, which is displayed after message ELM022I. The entire message group is listed below.

```
ELM022I HELP REQUEST ACCEPTED
ELM023I VALID COMMAND PARAMETERS ARE:
ELM024I HELP                      ...GET VALID COMMANDS FORMATS
ELM025I INFO,ID=NNNNNNNN          ...GET STATUS FOR RESOURCE NAMED NNNNNNNN
ELM026I INFO,ID=CLU               ...GET STATUS FOR EACH CONTROL LOGICAL UNIT
ELM027I INFO,ID=CLU,PEND          ...GET STATUS FOR EACH PENDING CLU
ELM028I INFO,ID=APPL              ...GET STATUS FOR EACH SUPPORTED APPLICATION
ELM029I INFO,ID=APPL,PEND         ...GET STATUS FOR EACH PENDING APPL
ELM030I INFO,ID=ALL               ...GET STATUS FOR EACH CLU AND APPL
ELM031I INFO,ID=ALL,PEND          ...GET STATUS FOR EACH PENDING CLU AND APPL
ELM032I MEMBER=MMMMMMMM           ...PROCESS DEFINITION MEMBER MMMMMMMM
ELM033I MINLINK=VVV,ID=ALL        ...SET MINLINK VALUE TO VVV (1 - 255)
ELM034I                              FOR EACH SUPPORTED APPLICATION
ELM035I MINLINK=VVV,ID=NNNNNNNN   ...SET MINLINK VALUE FOR APPL NNNNNNNN
ELM036I STOP                      ...REQUESTS CLOSEDOWN
```

System Action: Processing continues.

Operator Response: None.

Programmer Response: None.

ELM024I HELP ...GET VALID COMMAND FORMATS

Explanation: This is part of the HELP message group that begins with message ELM023I. See the explanation of that message for a complete description.

ELM025I INFO,ID=NNNNNNNN ...GET STATUS FOR RESOURCE NAMED NNNNNNNN

Explanation: This is part of the HELP message group that begins with message ELM023I. See the explanation of that message for a complete description.

ELM026I INFO,ID=CLU ...GET STATUS FOR EACH CONTROL LOGICAL UNIT

Explanation: This is part of the HELP message group that begins with message ELM023I. See the explanation of that message for a complete description.

ELM027I INFO,ID=CLU,PEND ...GET STATUS FOR EACH PENDING CLU

Explanation: This is part of the HELP message group that begins with message ELM023I. See the explanation of that message for a complete description.

ELM028I INFO,ID=APPL ...GET STATUS FOR EACH SUPPORTED APPLICATION

Explanation: This is part of the HELP message group that begins with message ELM023I. See the explanation of that message for a complete description.

ELM029I INFO,ID=APPL,PEND ...GET STATUS FOR EACH PENDING APPL

Explanation: This is part of the HELP message group that begins with message ELM023I. See the explanation of that message for a complete description.

ELM030I INFO,ID=ALL ...GET STATUS FOR EACH CLU AND APPL

Explanation: This is part of the HELP message group that begins with message ELM023I. See the explanation of that message for a complete description.

ELM031I INFO,ID=ALL,PEND ...GET STATUS FOR EACH PENDING CLU AND APPL

Explanation: This is part of the HELP message group that begins with message ELM023I. See the explanation of that message for a complete description.

ELM032I MEMBER=MMMMMMMM ...PROCESS DEFINITION MEMBER MMMMMMMM

Explanation: This is part of the HELP message group that begins with message ELM023I. See the explanation of that message for a complete description.

ELM033I MINLINK=VVV,ID=ALL...SET MINLINK VALUE TO VVV (1–255)

Explanation: This is part of the HELP message group that begins with message ELM023I. See the explanation of that message for a complete description.

ELM034I FOR EACH SUPPORTED APPLICATION

Explanation: This is part of the HELP message group that begins with message ELM023I. See the explanation of that message for a complete description.

ELM035I MINLINK=VVV,ID=NNNNNNNN ...SET MINLINK VALUE FOR APPL NNNNNNNN

Explanation: This is part of the HELP message group that begins with message ELM023I. See the explanation of that message for a complete description.

ELM036I STOP ...REQUESTS CLOSEDOWN

Explanation: This is part of the HELP message group that begins with message ELM023I. See the explanation of that message for a complete description.

ELM037I LMAPPL RECORD IGNORED — WOULD CAUSE MAXAPLC LIMIT TO BE EXCEEDED

Explanation: The logon manager MODIFY MEMBER command was entered. One or more LMAPPL records were encountered, either exceeding the number of applications specified for MAXAPLC or resulting in more than 4095 applications being defined to the logon manager.

System Action: Processing continues.

Operator Response: Save the system log for problem determination.

Programmer Response: Check the member specified to ensure that no more than 4095 applications are defined to the logon manager.

ELM040I *name type status curop=curcnt conop=concnt reason inits*

Explanation: This message is issued as part of a message group. The first message of the group is ELM014I. See the explanation of that message for a complete description.

ELM050I **SYNTAX ERROR [AFTER** *keyword***] [AT** *token***] IN** *type*

Explanation: A syntax error has been encountered in an operator command, definition member, or job parameters.

type indicates the type of error and can be one of the following:
OPERATOR COMMAND
DEFINITION MEMBER
JOB PARAMETERS

If any valid input was recognized, the token at which the error was detected is indicated by *token*.

If a keyword was recognized before the error was detected, the keyword is indicated by *keyword*.

System Action: The input is ignored.

Operator Response: Ensure that you entered the command correctly. If problems persist, save the system log for problem determination.

Programmer Response: Correct the definition member or job parameters.

ELM051I **INCORRECT VALUE SPECIFIED FOR** *operand* **IN** *type*

Explanation: The value for the indicated operand is out of range.

type indicates the type of error and can be one of the following:
OPERATOR COMMAND
DEFINITION MEMBER
JOB PARAMETERS

System Action: The operand is ignored. Processing continues.

Operator Response: For an operator command, check the command for errors, correct them, and retry the command. If problems persist, save the system log for problem determination.

Programmer Response: Correct the definition record or job parameter.

ELM060I **NO VALID VALUE FOR PARAMETER** *parameter* **PROVIDED**

Explanation: Parameter *parameter* is missing or invalid.

System Action: Processing continues.

Operator Response: None.

Programmer Response: None.

ELM061I **CURRENT VALUE OF MEMBER PARAMETER IS** *membername*

Explanation: One or more parameters are missing or invalid. VTAM provides the value of the MEMBER parameter for the operator's information.

System Action: Processing continues.

Operator Response: None.

Programmer Response: None.

ELM062I CURRENT VALUE OF MAXSUBA PARAMETER IS *value*

Explanation: One or more parameters are missing or invalid. The value of the MAXSUBA parameter is provided for the operator's information.

System Action: Processing continues.

Operator Response: None.

Programmer Response: None.

ELM063A ENTER LOGON MANAGER START PARAMETERS (OR 'END')

Explanation: One or more parameters required to start the logon manager are missing or invalid.

System Action: Prompts for valid parameters.

Operator Response: Enter the valid parameters. The value for any parameter specified in response to this message overrides the current value for that parameter. If you enter END instead of a parameter string, the logon manager terminates.

Programmer Response: None.

ELM070I *macro* **FAILURE [FOR APPLICATION** *applname***][, RETURN CODE** *value***]**

Explanation: The macro indicated by *macro* failed.

If the macro failure affected the processing of a session initiation for a specific application, the application name is indicated by *applname*.

If available, a return code (as indicated by *value*) is provided for problem determination.

value, displayed in decimal, can be one of the following:

32 GETMAIN failure
38 Logon manager not available
39 CLU not found
52 APLB not found
56 Subarea address not found
60 Function code not valid
70 Logon manager exit not initialized

If *macro* is ISTIECIV and *value* is not listed above, *value* may have been returned by ELMCLUEX, the CLU search exit routine. Refer to your ELMCLUEX exit routine for the meaning of those return codes. Refer to *z/OS Communications Server: SNA Customization* for more information on the CLU search exit routine.

System Action: Begins termination processing.

Operator Response: Save the system log for problem determination.

Programmer Response: For failure information concerning the specified macro, see *z/OS Communications Server: SNA Programming* or the appropriate MVS manual. For information on the APPCCMD macro, see the *z/OS Communications Server: SNA Programmer's LU 6.2 Guide*.

ELM075I SESSION SETUP FOR *olu* **TO** *dlu* **FAILED, SENSE =** *code*

Explanation: A dependent secondary logical unit (SLU) *olu* attempted to log on to a Transaction Processing Facility (TPF) application *dlu*, but session setup failed.

olu is the origin logical unit.

dlu is the destination logical unit.

code is the sense code and provides information about the cause of the failure. See the *z/OS Communications Server: IP and SNA Codes* for a description of *code*.

System Action: Processing continues.

Operator Response: Save the system log for problem determination.

Programmer Response: The cause of this message is usually a definition or line problem. Take the following actions:

1. Ensure that *olu* is defined to the TPF system on which the TPF application *dlu* resides.
2. Ensure that the TPF application *dlu* is active and accepting session requests.
3. Ensure that VTAM has a valid session to the TPF system.
4. If you cannot identify a definition or line problem, dump Logon Manager.
5. If this message is the result of an apparent software error, take the following actions:
   - If you have access to IBMLink, search for known problems in this area. If no applicable matches are found, report the problem to IBM by using the Electronic Technical Report (ETR) option on IBMLink.
   - If you do not have access to IBMLink, report the problem to the IBM software support center.

For additional information on Logon Manager and TPF, see the *z/OS Communications Server: SNA Network Implementation Guide* .

ELM080I ATTACH FAILED FOR SUBTASK *taskname*

Explanation: The logon manager attempted to ATTACH subtask *taskname*. The ATTACH failed.

System Action: If the condition occurs during logon manager initialization, initialization fails and ELM110I is issued. Otherwise, the logon manager continues processing.

Operator Response: If the message recurs, enter the logon manager MODIFY MINLINK command to stop activation attempts for this subtask.

Programmer Response: None.

ELM081I BUFFER STORAGE NOT AVAILABLE FOR RECEIVE FROM CLU *cluname*

Explanation: No buffer is available to issue a receive for the channel-attached control-point logical unit (*cluname*).

System Action: The session with the channel-attached control-point logical unit is ended.

Operator Response: Save the system log for problem determination.

Programmer Response: If necessary, increase the number of buffers by configuration definition.

ELM090I SEND TO CLU *cluname* **FAILED[, RC/FB=***value***]**

Explanation: A SEND to channel-attached control-point LU *cluname* failed.

When the associated RPL can be read, the return code and feedback values are indicated by *value*. See the *z/OS Communications Server: IP and SNA Codes* for a description of *value*.

System Action: Processing continues.

Operator Response: Retry the operation that caused the SEND macro to fail. If the condition persists, save the system log for problem determination.

Programmer Response: For additional information on the SEND macro, see *z/OS Communications Server: SNA Programming* .

ELM091I RECEIVE FROM CLU *cluname* **FAILED[, RC/FB=***value***]**

Explanation: A RECEIVE from channel-attached control-point LU *cluname* failed.

When the associated RPL can be read, the return code and feedback values are indicated by *value*. See the *z/OS Communications Server: IP and SNA Codes* for a description of *value*.

System Action: The session with the channel-attached control-point LU is terminated.

Operator Response: Save the system log for problem determination.

Programmer Response: For additional information on the RECEIVE macro, see *z/OS Communications Server: SNA Programming* .

ELM100I ACB RELEASE-LEVEL VECTOR INDICATES INCORRECT VTAM LEVEL

Explanation: The active version of VTAM is pre-V3R2.

System Action: Begins termination processing.

Operator Response: Save the system log for problem determination.

Programmer Response: Ensure that a V3R2 VTAM or higher is installed before activating the logon manager.

ELM101A ENTER 'CONTINUE' WHEN VTAM IS ACTIVE (OR 'END')

Explanation: The logon manager attempted to open its ACB and determined that VTAM was not active.

System Action: Waits for operator input.

Operator Response: Enter CONTINUE when VTAM message IST020I indicates that VTAM is active. Enter END to stop the logon manager.

Programmer Response: None.

ELM110I INITIALIZATION UNSUCCESSFUL

Explanation: The logon manager initialization failed.

System Action: Termination processing begins.

Operator Response: Save the system log for problem determination.

Programmer Response: Use the information in previous messages to assist you in correcting the problem.

Chapter 3. IKT messages for TSO/VTAM network operators

This chapter lists TSO/VTAM messages that can appear on a network operator's console.

These messages have a different prefix than TSO messages. TSO/VTAM issues messages that begin with IKT; TSO issues messages that begin with IKJ.

TSO/VTAM messages for terminal operators are described in Chapter 4, "IKT messages for TSO/VTAM terminal users" on page 31.

See the *z/OS Communications Server: SNA Network Implementation Guide* for information on TSO/VTAM. For information on diagnosing TSO/VTAM problems, see *z/OS Communications Server: SNA Diagnosis Vol 1, Techniques and Procedures*.

IKT001D *nnnn* **USER(S) ACTIVE REPLY 'U', 'SIC', OR 'FSTOP'**

Explanation: An operator entered a start command to activate TCAS. *nnnn* users were found to be active from a previous session. This situation can occur if TCAS previously failed, and users were not properly terminated.

System Action: The system waits for the operator to reply.

Operator Response: Check to see if the users tried to enter a logoff command before a new start command for TSO was entered. If logoff was entered and the users' address space is still active, there may be a VTAM/TSO interface problem. Otherwise, take one of the following actions:

- Reply "U" to continue start command processing and to allow the active users to remain active.
- Reply "SIC" to cancel the active users normally, allowing any messages queued for them to be received. Start command processing will then continue.
- Reply "FSTOP" to force immediate cancellation of the active users. Start command processing will then continue. Use "FSTOP" only if "SIC" is ineffective.

Programmer Response: None.

IKT002I TCAS IS TERMINATING, REASON CODE=*code*

Explanation: TCAS was unable to continue its normal processing because of an error, indicated by *code*:

04 The attempt to activate TCAS was invalid because TCAS was already active in the system.

16 The TCAS main task was unable to attach the VTAM interface subtask.

20 The TCAS main task was unable to attach the user interface subtask.

24 The TCAS main task was unable to attach the console communication subtask.

28 TCAS was unable to obtain storage for the TCAS table (TCAST) in the common service area (CSA).

32 The TCAS main task was abnormally terminated and unable to recover.

48 The VTAM interface subtask was abnormally terminated and unable to recover.

52 The user interface subtask was abnormally terminated and unable to recover.

56 The console communication subtask was abnormally terminated and unable to recover.

System Action: TCAS terminates normally for codes 04, 48, 52, and 56. TCAS terminates abnormally for codes 16, 20, 24, 28, and 32.

Operator Response: Obtain a dump by specifying "DUMP" in response to TCAS termination message IKT012D. Save the system log for problem determination.

Programmer Response: The reason code indicates the reason TCAS is terminating. Correct the problem as determined from the TCAS dump and console output provided by the operator. See *z/OS Communications Server: SNA Diagnosis Vol 1, Techniques and Procedures* for more information on termination problems.

© Copyright IBM Corp. 1984, 2002

IKT003D TCAS UNABLE TO ACCEPT LOGONS, REASON CODE=*code* REPLY 'RETRY' OR 'TERM'

Explanation: TCAS issues this message when VTAM fails to open the TCAS access method control block (ACB) or to accept logons to TSO. This is either an OPEN ACB or SETLOGON macro failure.

code (in decimal) indicates the reason for the problem.

16 The SETLOGON macro, issued by TCAS to allow VTAM to accept logons, failed.

20 A VTAM OPEN macro could not be processed because of a temporary shortage of storage.

36 TCAS tried to open an ACB. The password in the ACB did not match the password in the corresponding APPL entry, or the ACB did not specify a password when one was specified in the APPL entry.

82 The VTAM operator entered a HALT command, and VTAM is shutting down.

84 Either the address supplied in the ACB's APPLID field lies beyond TCAS's addressable range, or the name indicated by the ACB's APPLID field is not defined to VTAM. If the OPEN macro was specified correctly, you may have left out TSO's application program ID (which is TSO) during VTAM definition.

86 A match for application program ID TSO was found, but it was for an entry other than an APPL statement.

88 Another ACB, already opened by VTAM, indicates the same application program ID (TSO) that this ACB does. You may have assigned the same application program ID to two different versions of TSO. This is valid only if the programs do not run (or at least do not open their ACBs) concurrently.

90 The name (TSO) indicated by the ACB's APPLID field is not defined to VTAM. This error may have occurred because:

1. No APPL definition statement was coded for TSO.
2. The major node containing the APPL definition statement for TSO has not been activated.
3. The major node containing the APPL definition statement for TSO has been deactivated.

92 VTAM has been included as part of the operating system, but it is inactive.

96 An apparent system error occurred. Either there is a defect in VTAM's logic, or there is an error in TCAS's use of the OPEN macro that VTAM did not properly detect.

112
The ACB failed to open because close processing was not completed.

System Action: Processing continues.

Operator Response:
- Reply 'RETRY' to cause TCAS to try again to accept logons.
- Reply 'TERM' to cause TCAS to terminate.

Save the system log for problem determination.

Programmer Response: See *z/OS Communications Server: SNA Programming* for a description of the OPEN ACB and SETLOGON macros. See the *z/OS Communications Server: SNA Diagnosis Vol 1, Techniques and Procedures* for more information on logon problems.

IKT004D INVALID PARAMETERS SPECIFIED, RESPECIFY OR REPLY 'U'

Explanation: One or more invalid parameters were specified when trying to start, modify, or stop TCAS. For more information, see *z/OS MVS Initialization and Tuning Reference*.

System Action: The system waits for the operator to reply.

Operator Response: Check for an invalid parameter. Respecify all the parameters, or reply 'U' to cause the command to be ignored.

Programmer Response: None.

IKT005I TCAS IS INITIALIZED

Explanation: TCAS initialization began in response to a START TSO command and is now complete.

System Action: Unless they are suppressed, logons to TSO/VTAM are now accepted.

Operator Response: None.

Programmer Response: None.

IKT006I TCAS ENDED

Explanation: TCAS has ended normally.

System Action: TSO/VTAM is terminated.

Operator Response: None.

Programmer Response: None.

IKT007I TCAS ACCEPTING LOGONS

Explanation: Logons are allowed with an operator START or MODIFY command.

System Action: Logons to TSO/VTAM are now accepted.

Operator Response: None.

Programmer Response: None.

IKT008I TCAS NOT ACCEPTING LOGONS

Explanation: TCAS has stopped accepting logons in response to an operator's command (for example, MODIFY TSO USERMAX=...). No new logons will be accepted until requested by the operator.

System Action: Processing continues.

Operator Response: None.

Programmer Response: None.

IKT009I TPEND HAS OCCURRED, TCAS TERMINATION IN PROGRESS

Explanation: VTAM has notified TCAS of a VTAM abend (TPEND exit driven). A HALT command was entered to stop VTAM, or TCAS is terminating.

System Action: TCAS performs termination processing.

Operator Response: None.

Programmer Response: None.

IKT010D *nnnnn* **USER(S) ACTIVE, REPLY 'SIC' OR 'FSTOP'**

Explanation: A STOP command was entered to stop TCAS, but *nnnnn* terminal users are still active.

System Action: The system waits for the operator to reply.

Operator Response: The two acceptable replies are:

- Reply 'SIC' to cancel the active users normally. This allows them to receive any messages queued for them. It allows TSO/VTAM to perform its normal termination processing.
- Reply 'FSTOP' to force immediate cancellation of the active users. The users will not receive any messages queued for them. TSO/VTAM will not perform its normal termination processing; that is, task resource manager processing will be circumvented. Use 'FSTOP' only if 'SIC' did not work in a previous attempt.

Programmer Response: None.

IKT011I TCAS UNABLE TO {ACCEPT|QUIESCE} LOGONS, REASON CODE=*code*

Explanation: TCAS issues this message in response to a TSO MODIFY command requesting that TCAS accept or quiesce logons. VTAM either failed to open the TCAS ACB or failed to accept or quiesce logons to TSO.

code (in decimal) indicates the reason for the problem.

16 The SETLOGON macro, issued by TCAS to request VTAM to accept or reject logons, failed.

20 A VTAM OPEN macro could not be processed because of a temporary storage shortage.

82 The VTAM operator entered a HALT command, and VTAM is shutting down.

84 Either the address supplied in the ACB's APPLID field lies beyond TCAS's addressable range, or the name indicated by the ACB's APPLID field is not defined to VTAM. If the OPEN macro was specified correctly, you may have left out TSO's application program ID (which is TSO) during VTAM definition.

86 A match for application program ID TSO was found, but it was for an entry other than an APPL entry.

88 Another ACB, already opened by VTAM, indicates the same application program ID (TSO) that this ACB does. You may have assigned the same application program ID to two different versions of TSO. This is valid only if the programs do not run (or at least do not open their ACBs) concurrently.

90 The name (TSO) indicated by the ACB's APPLID field is not defined to VTAM. This error may have occurred because:

1. No APPL definition statement was coded for TSO.
2. The major node containing the APPL definition statement for TSO has not been activated.
3. The major node containing the APPL definition statement for TSO has been deactivated.

92 VTAM has been included as part of the operating system, but it is inactive.

96 An apparent system error occurred. Either there is a defect in VTAM's logic, or there is an error in TCAS's use of the OPEN macro that VTAM did not properly detect.

100
No more TSO user APPLIDs are available. You may have defined too few TSO user APPLIDs.

System Action: Processing continues.

Operator Response: Save the system log for problem determination.

Programmer Response: Use the system log and reason code to assist you in correcting the problem. See *z/OS Communications Server: SNA Programming* for a description of the OPEN ACB and SETLOGON macros. See the *z/OS Communications Server: SNA Diagnosis Vol 1, Techniques and Procedures* for more information on TSO/VTAM logon problems.

IKT012D TCAS TERMINATION IN PROGRESS — SPECIFY 'U' OR 'DUMP'

Explanation: TCAS is terminating. An SVC dump can be requested. This message may be due to an abend. Refer to IKT002I for more information.

System Action: The system waits for the operator to reply.

Operator Response:
- Reply 'U' to continue termination processing without a dump.
- Reply 'DUMP' to produce a dump of virtual storage.

Programmer Response: None.

IKT013I PARAMETER FILE CANNOT BE OPENED - DEFAULT PARAMETERS USED

Explanation: An error occurred while TCAS was trying to open the TSO parameter file. This caused TSO/VTAM default parameters to be used. The parameter file can be found in:
- The data set defined by the PARMLIB DD statement in the TSO start procedure
- A data set in the logical parmlib concatenation (for z/OS)
- SYS1.PARMLIB

System Action: TCAS initialization continues.

Operator Response: If the defaults are not acceptable, stop TSO/VTAM. Save the system log for problem determination.

Programmer Response: See the *z/OS Communications Server: SNA Diagnosis Vol 1, Techniques and Procedures* for more information on TSO/VTAM problems.

IKT014I I/O ERROR READING MEMBER *member_name* - DEFAULT PARAMETERS USED

Explanation: An I/O error occurred while TCAS was reading TSO/VTAM parameters from the parameter member *member_name*. This caused TSO/VTAM default parameters to be used. The parameter member *member_name* can be found in:

- The data set defined by the PARMLIB DD statement in the TSO start procedure
- A data set in the logical parmlib concatenation (for z/OS)
- SYS1.PARMLIB

member_name is the name of the member of the parameter data set.

System Action: TCAS initialization continues.

Operator Response: If the defaults are not acceptable, stop TSO/VTAM. Save the system log for problem determination.

Programmer Response: See the *z/OS Communications Server: SNA Diagnosis Vol 1, Techniques and Procedures* for more information on TSO/VTAM problems.

IKT015I MODIFY COMMAND REJECTED, INVALID PARAMETERS SPECIFIED

Explanation: A TSO MODIFY command entered to modify TCAS specified one or more invalid parameters.

System Action: The command is ignored.

Operator Response: Reenter the command using the correct parameters. See *z/OS MVS System Commands* for additional information on commands.

Programmer Response: None.

IKT016D INVALID REPLY — RESPECIFY

Explanation: While processing the STOP command, TCAS asked the operator a question and the operator gave an invalid reply.

System Action: The system waits for the operator to reply.

Operator Response: Specify a valid reply, either ‘FSTOP’ or ‘SIC’. See message IKT010D for descriptions of ‘FSTOP’ and ‘SIC’.

Programmer Response: None.

IKT017I FILE FOR PRINTING TSO/VTAM TIME SHARING PARAMETERS CANNOT BE OPENED

Explanation: An error was encountered during TCAS initialization while trying to open the file for printing TSO/VTAM parameters.

System Action: The parameters are not printed, but TCAS initialization continues.

Operator Response: None.

Programmer Response: Determine if the file should be open and if so, open it.

IKT018I I/O ERROR PRINTING TSO/VTAM TIME SHARING PARAMETERS, PRINTING STOPPED

Explanation: An error was encountered during TCAS initialization while printing TSO/VTAM parameters.

System Action: Printing of the parameters is stopped, but TCAS initialization continues.

Operator Response: None.

Programmer Response: None.

IKT020I TCAS CONSOLE COMMUNICATION TASK ABENDED, RECOVERY IN PROGRESS

Explanation: A TCAS subtask abended.

System Action: TCAS reattaches the terminated task.

Operator Response: None.

Programmer Response: None.

IKT026D TCAS ABEND IN PROGRESS — SPECIFY 'U' OR 'DUMP'

Explanation: TCAS is abending. You can request an SVC dump.

System Action: The system waits for the operator to reply.

Operator Response:
- Reply 'U' to continue termination processing without a dump.
- Reply 'DUMP' to produce a dump of virtual storage.

Programmer Response: None.

IKT028I RC= *aabbcc* **SENSE=** *code* **TERMINAL** *termid* **CANNOT BE CONNECTED OR RELEASED BY VTAM**

Explanation: A user tried unsuccessfully to log on to TSO/VTAM from terminal *termid*.

The reason code is made up of three parts:

aa Indicates the general reason that the message is being issued.

01 CLSDST to terminal *termid* failed.

04 OPNDST to terminal *termid* failed.

06 OPNDST to terminal *termid* failed when trying to issue message IKT00201I to indicate that the maximum number of users are logged on.

bb RPLRTNCD field in the RPL (return code).

cc RPLFDB2 field in the RPL (feedback code).

See the *z/OS Communications Server: IP and SNA Codes* for a description of *bb* and *cc*.

code is the sense code and represents the RPLFDBK2 field in the RPL. See the *z/OS Communications Server: IP and SNA Codes* for a description of *code*.

termid is the terminal identifier. If VTAM issues a network-qualified name, *termid* is in the form *netid.name*.

System Action: Processing continues. If no action is taken, the terminal may be unavailable for use until the next time TSO is started.

Operator Response: Save the system log for problem determination.

Programmer Response: Use the system log and the descriptions of *aabbcc* and *code* to assist you in correcting the problem.

IKT029I RC= *aabbcc* **SENSE=** *code* **TERMINAL** *termid* **ABOUT TO BE RELEASED BY VTAM**

Explanation: A user tried to log on to TSO/VTAM from terminal *termid*. An error occurred that prevented a connection between the terminal and TCAS. As a result, the terminal is about to be freed.

The reason code is made up of three parts:

aa Indicates the general reason that the message is being issued.

01 CLSDST to terminal *termid* failed.

02 INQUIRE device characteristics failed.

03 INQUIRE session parameters failed.

04 OPNDST to terminal *termid* failed.

06 OPNDST to terminal *termid* failed when trying to issue message IKT0020I to indicate that the maximum number of users are logged on.

20 GETMAIN for work area failed.

21 Invalid session parameters.

22 Invalid device characteristics.

bb If an RPL-based macro failed, *bb* contains the RPLRTNCD field in the RPL. Otherwise, it is 0.

cc If an RPL-based macro failed, *cc* contains the RPLFDB2 field in the RPL. Otherwise, it is 0.

If *bb* and *cc* are not 0, see the *z/OS Communications Server: IP and SNA Codes* for a description of these codes.

If an RPL-based macro failed, *code* is the sense code and represents the RPLFDBK2 field in the RPL. Otherwise, it is 0. If *code* is not 0, see the *z/OS Communications Server: IP and SNA Codes* for a description of *code*.

termid is the terminal identifier. If VTAM issues a network-qualified name, *termid* is in the form *netid.name*.

System Action: Processing continues, and TCAS tries to release the terminal.

Operator Response: If you VARY LOGON to TSO either by using the VARY LOGON command or by specifying LOGAPPL=TSO in a definition statement, a new logon attempt is made when the user session ends, even if it ends in error. If this occurs, this message is issued repeatedly with **SENSE=0821**. Enter the VARY NOLOGON command to correct the situation.

Otherwise, save the system log for problem determination.

Programmer Response: Use the system log and the description of *aabbcc* and *code* to assist you in correcting the problem.

- If **RC = 220000**, this may indicate that FEATUR2=EDATS is coded on the LOCAL definition statement for a channel-attached non-SNA device. To correct this error, remove the FEATUR2 operand from the LOCAL definition statement. Deactivate and reactivate the major node to use the new definition. See the *z/OS Communications Server: SNA Resource Definition Reference* for additional information on coding the LOCAL definition statement and the FEATUR2 operand.
- If **RC = 061001**, this may indicate that FASTPASS=NO should be coded on the SLU definition statement so that the SLU can support the type of session initiation required. See the section on common subarea network problems, in the *z/OS Communications Server: SNA Diagnosis Vol 1, Techniques and Procedures* for more information about this problem.

IKT030I TCAS LOGON PROCESS FAILURE PLU=*pluname* **SLU=***sluname* **[SENSE=** *code***]**

Explanation: TCAS has received notification in its NSEXIT that a session failure occurred while processing a logon request to TSO.

pluname is the primary logical unit.

- If *pluname* is the name of the TCAS address space, no sense information is displayed, and the session has been terminated for one of the following reasons:
  - Session outage occurred.
  - The operator terminated the session.
  - A logoff TYPE(FORCE) was entered.
- If *pluname* is not the name of the TCAS address space, *code* is the sense code and indicates the reason for the failure. See the *z/OS Communications Server: IP and SNA Codes* for a description of *code*.

sluname is the secondary logical unit. If VTAM issues a network-qualified name, *sluname* is in the form *netid.name*.

System Action: The address space created for the logon request is canceled. Processing continues.

Operator Response: Save the system log for problem determination.

Programmer Response: Use the system log and explanation of *code*, if issued, to assist you in correcting the problem.

See the *z/OS Communications Server: SNA Diagnosis Vol 1, Techniques and Procedures* for more information on TSO/VTAM logon problems.

IKT031I PARAMETER(S) SPECIFIED IN MEMBER *member_name* **NOT VALID**

Explanation: One or more parameters that are not valid were specified in the *member_name* member of the parameter data set. This caused TSO/VTAM default parameters to be substituted for the parameters that are not valid. The parameter member *member_name* can be found in:
- The data set defined by the PARMLIB DD statement in the TSO start procedure
- A data set in the logical parmlib concatenation (for z/OS)
- SYS1.PARMLIB

member_name is the name of the member of the parameter data set.

System Action: Default values are substituted for the values that are not valid. Processing continues.

Operator Response: If the defaults are not acceptable, stop TSO/VTAM. Save the system log for problem determination. Save the output from the procedure used to start TSO/VTAM.

Programmer Response: Refer to the TSO/VTAM output to identify parameters that are not valid. This output will be on the device specified by the PRINTOUT DD statement of the procedure or on the device specified by the device name operand of the MVS operator START command. For additional information on the MVS START command, refer to *z/OS MVS System Commands*.

IKT032I *macro* **FAILED FOR** *gname* **RPLRTNCD** *aa* **RPLFDB2** *bb*

Explanation: TSO/VTAM issues this message when an error occurs from a macro used to create or terminate a generic name association.

macro specifies the failing request type and can be either:
- SETLOGON OPTCD=GNAMEADD
- SETLOGON OPTCD=GNAMEDEL.

gname is the generic resource name.

aa is the RPLRTNCD field in the RPL (return code).

bb is the RPLFDB2 field in the RPL (feedback code).

System Action: When the request type is SETLOGON GNAMEADD:
- If there are no active users, TSO/VTAM processing stops.
- If there are active users, processing continues but no generic name support is available for TSO/VTAM.

When the failing request type is SETLOGON GNAMEDEL, TSO/VTAM processing continues.

Operator Response: Save the system log for problem determination.

Programmer Response: See the *z/OS Communications Server: IP and SNA Codes* for a description of the return and feedback codes.

IKT033I TCAS USERMAX VALUE SET TO *count*

Explanation: TSO/VTAM issues this message to indicate the successful completion of an MVS MODIFY TSO, USERMAX command.

count is the number of TSO/VTAM users that can be active concurrently.

System Action: Processing continues.

Operator Response: None.

Programmer Response: None.

IKT100I USERID *userid* CANCELED DUE TO UNCONDITIONAL LOGOFF

Explanation: A VTAM USS unconditional logoff command was entered by a terminal user *userid*. The session with *userid* is terminated.

System Action: The address space created for the session is canceled. Processing continues.

Operator Response: None.

Programmer Response: None.

IKT103I UNKNOWN ENTRY CODE *code* TO VTAM LOSTERM EXIT

Explanation: The return code given to the LOSTERM exit routine of TSO/VTAM is not recognized. Either a list of entry codes is outdated or there is a parameter list error.

code is the return code in error.

System Action: *code* is written to the LOGREC data set. Processing continues.

Operator Response: Save the system log for problem determination.

Programmer Response: See the *z/OS Communications Server: SNA Diagnosis Vol 1, Techniques and Procedures* for more information on the LOGREC data set.

IKT105I LOGON REJECTED DUE TO INVALID APPLICATION ID

Explanation: TCAS assigned an invalid application program ID to a terminal user attempting to log on to TSO/VTAM.

System Action: The terminal user's address space is terminated and dumped. System processing continues.

Operator Response: Save the system log for problem determination.

Programmer Response: Find the invalid application ID (offset 0 in TVWA) in that dump. SYS1.VTAMLST contains valid application IDs.

See the *z/OS Communications Server: SNA Diagnosis Vol 1, Techniques and Procedures* for more information on TSO/VTAM logon problems.

IKT106I LOGON REJECTED, CANNOT OPEN ACB, ACBERFLG=X'*nn*

Explanation: A terminal user was unable to log on to TSO/VTAM because of an OPEN ACB failure.

nn is the ACB error flag value in hexadecimal. See the *z/OS Communications Server: IP and SNA Codes* for a description of *nn*.

System Action: The OPEN ACB failure causes a dump. The user address space is terminated. System processing continues.

Operator Response: Save the system log and dump for problem determination.

Programmer Response: Correct the problem as determined from the ACB error flag *nn*, and the output from the system log and dump.

IKT109I TSO/VTAM LOSTERM FAILED DUE TO VTAM SHORTAGE OF UECB/VRPL

Explanation: The TSO/VTAM LOSTERM exit could not be scheduled because of a shortage of storage for required control blocks.

System Action: The user's address space is terminated.

Operator Response: If VTAM continues to issue this message, save the system log and request a dump to determine current storage usage.

Programmer Response: Increase storage as required.

IKT111I APPLNAME=*applname* **FAILED DUE TO:** *reason*

Explanation: This message always follows IKT117I.

applname is the application name running in this TSO user's address space.

reason indicates the reason for the failure and is one of the following:

GETMAIN FAILURE (GLOBAL 239)
GETMAIN FAILURE (LOCAL 229)
INSUFFICIENT STORAGE FOR QUEUE ELEMENTS
INVALID TERMINAL TYPE
OPEN ACB, INSUFFICIENT STORAGE
OPEN ACB, VTAM IS NOT ACTIVE
OPNDST, INSUFFICIENT STORAGE
OPNDST, RPLRTNCD= *aa*, **RPLFDB2=** *bb*, **RPLFDBK2=** *code*
SETLOGON GNAMESUB, RPLRTNCD= *aa*, **RPLFDB2=** *bb*
TCAS CLSDST PASS FAILURE
TCAS TERMINATED

System Action: Logon is terminated. The user's address space is terminated.

Operator Response: For insufficient storage errors, if VTAM has been initialized, wait a short time and reenter the command. If VTAM continues to issue this message, save the system log and request a dump to determine current storage usage.

If VTAM initialization failed, save the system log for problem determination.

Programmer Response: *reason* determines the recommended action.

GETMAIN FAILURE (GLOBAL 239)
Review CSA storage requirements. Increase storage as required.

GETMAIN FAILURE (LOCAL 229)
Review storage requirements for TCAS. Increase storage as required.

INSUFFICIENT STORAGE FOR QUEUE ELEMENTS
Contact the IBM software support center. This is a TSO/VTAM control block problem.

INVALID TERMINAL TYPE
Ensure the terminal is supported by TSO/VTAM.

OPEN ACB, INSUFFICIENT STORAGE
The OPEN ACB return code from VTAM indicates a storage shortage. Review VTAM storage requirements.

OPEN ACB, VTAM IS NOT ACTIVE
Make sure VTAM is active.

OPNDST, INSUFFICIENT STORAGE
The OPNDST return code from VTAM indicates a storage shortage. Review VTAM storage requirements.

OPNDST, RPLRTNCD= *aa*, **RPLFDB2=** *bb*, **RPLFDBK2=** *code*
OPNDST failed.
aa is the RPLRTNCD field in the RPL (return code), and *bb* is the RPLFDB2 field in the RPL (feedback code). See the *z/OS Communications Server: IP and SNA Codes* for a description of these codes.
code is the sense code and represents the RPLFDBK2 field in the RPL. See the *z/OS Communications Server: IP and SNA Codes* for a description of *code*.

SETLOGON GNAMESUB, RPLRTNCD= *aa*, **RPLFDB2=** *bb*
SETLOGON failed.
aa is the RPLRTNCD field in the RPL (return code), and *bb* is the RPLFDB2 field in the RPL (feedback code). See the *z/OS Communications Server: IP and SNA Codes* for a description of these codes.

TCAS CLSDST PASS FAILURE
TCAS issued a CLSDST PASS to place the terminal in ownership of the newly created user address space, and the CLSDST has failed. Examine the API records in the VTAM internal trace to determine the cause for the CLSDST failure in TCAS. See the *z/OS Communications Server: SNA Diagnosis Vol 1, Techniques and Procedures* for more information.

TCAS TERMINATED
Make sure TCAS is active and not in the process of terminating or abending when the logon is attempted.

IKT112I {SEND|RECEIVE} ERROR DURING QUERY PROCESSING FOR *applname***,RPLRTNCD=** *aa***,RPLFDB2=** *bb***,SENSE=** *code*

Explanation: During logon for application *applname*, TSO/VTAM tried to issue a QUERY 3270 data stream to a terminal in order to determine the terminal's characteristics. The SEND or RECEIVE failed for the reason described by the return code *aa*, feedback code *bb*, and sense code *code*.

aa is the RPLRTNCD field in the RPL (return code) and *bb* is the RPLFDB2 field in the RPL (feedback code). See the *z/OS Communications Server: IP and SNA Codes* for a description of these codes.

code is the sense code and represents the RPLFDBK2 field in the RPL. See the *z/OS Communications Server: IP and SNA Codes* for a description of *code*. See the *z/OS Communications Server: IP and SNA Codes* for a description of sense information for a 3270 SNA or non-SNA device.

System Action: The logon continues. Default terminal characteristics as specified by the LANG operand of the terminal's MODEENT entry in the logon mode table were assumed.

Operator Response: Save the system log for problem determination.

Programmer Response: Use the system log and the descriptions of *aa*, *bb*, and *code* to assist you in correcting the problem.

See *z/OS Communications Server: SNA Programming* for information on the SEND and RECEIVE macros.

IKT115I TSO UNABLE TO DISCONNECT TERMINAL *luname*

Explanation: A terminal user logged off from TSO/VTAM. The VTAM ACB associated with the user was closed, but a VTAM error has prevented the user's disconnection from TSO. *luname* is the logical unit that TSO was unable to disconnect. If VTAM issues a network-qualified name, *luname* is in the form *netid.name*.

System Action: The user address space terminates with ABEND code hexadecimal 0AB (register 15 contains X'0105'). The terminal that could not be disconnected is not available to other users.

Operator Response: Try to make the terminal available to other users by varying it offline, deactivating it, and then reactivating it.

Programmer Response: None.

IKT116I *userid* **{SEND|RECEIVE} ERROR,RPLRTNCD=** *aa***, RPLFDB2=** *bb***, SENSE=** *code***, WAITING FOR RECONNECTION** *termid*

Explanation: A SEND or RECEIVE request entered by the TSO/VTAM user *userid* at terminal *termid* had an I/O error. If VTAM issues a network-qualified name, *termid* is in the form *netid.name*.

aa is the RPLRTNCD field in the RPL (return code) and *bb* is the RPLFDB2 field in the RPL (feedback code). See the *z/OS Communications Server: IP and SNA Codes* for a description of these codes.

code is the sense code and represents the RPLFDBK2 field in the RPL. See the *z/OS Communications Server: IP and SNA Codes* for a description of *code*. See the *z/OS Communications Server: IP and SNA Codes* for a description of sense information for a 3270 SNA or non-SNA device.

System Action: The user's connection to *termid* has failed, and the LOSTERM exit is scheduled. The user's address space is still intact. It can be reconnected to a terminal with a LOGON *userid* RECONNECT command. If the command is not entered, the address space will terminate at the end of the reconnect time limit (RECONLIM) specified in the TSO/VTAM parameter file.

Operator Response: This is probably a hardware error. Save the system log for problem determination.

Programmer Response: Use the system log and the descriptions of *aa*, *bb*, and *code* to assist you in correcting the problem.

See *z/OS Communications Server: SNA Diagnosis Vol 1, Techniques and Procedures* for more information on TSO/VTAM problems and terminal problems. See *z/OS Communications Server: SNA Programming* for information on the SEND and RECEIVE macros.

IKT117I TSO/VTAM INITIALIZATION FAILED FOR APPLNAME=*applname*, LUNAME=*luname*

Explanation: This message always precedes message IKT111I.

applname is the application name running in this TSO user's address space.

luname is the LU name of the device being used. If VTAM issues a network-qualified name, *luname* is in the form *netid.name*.

See the explanation of message IKT111I for additional information.

IKT118I INVALID QUERY REPLY, TERMINAL ID: *termid*

Explanation: During a logon for the TSO application, TSO/VTAM issued a QUERY 3270 data stream to a terminal in order to determine the terminal's characteristics. The response to the query had a field length of zero, which in an invalid length value.

termid is the terminal identifier. If VTAM issues a network-qualified name, *termid* is in the form *netid.name*.

System Action: The logon continues. It will use the terminal characteristics from the valid part of the query response.

Operator Response: Terminal *termid* has a hardware problem. Save the system log for problem determination. Run your operating system service aid program to determine if MDR/OBR information has been recorded. See the *EREP User's Guide and Reference* for more information on service aid programs.

If you use a network management application such as NetView, check to see if an alert was recorded for this problem.

Programmer Response: If you cannot determine the cause of the problem from the output provided or need additional assistance, contact the IBM hardware support center.

If available, provide the MDR/OBR information from your operating system service aid program or the alert information recorded by your network management application.

IKT119I *langcode* MESSAGES NOT AVAILABLE FOR LU *luname*, USING DEFAULT

Explanation: TSO/VTAM issues this message when a TSO/VTAM terminal user message cannot be sent to a terminal in the desired language. This may occur for one of the following reasons:

- The terminal user message was defined using a double-byte character set, but the terminal does not support double-byte character sets.
- The desired language is not currently available from the MVS message service.

Note: This message is not issued when *langcode* is **ENU**, the default language.

langcode is a 3-character language code that indicates the preferred language for TSO/VTAM terminal user messages.

- *langcode* corresponds to the value of the PLANG operand on the PROFILE command or is passed on the CINIT during session initiation. See the *z/OS Communications Server: SNA Customization* for additional information.
- See the *z/OS Communications Server: SNA Programming* for a list of valid language code settings.

luname is the name of the LU to which the message is being sent. If VTAM issues a network-qualified name, *luname* is in the form *netid.name*.

System Action: Processing continues.

Operator Response: Save the system log for problem determination.

Programmer Response: This message may be useful for problem determination if a terminal user is not receiving translated messages as desired. The MVS message service may need to be updated to support the desired language.

IKT120I CLOSE ACB FOR *applname* **FAILED, CODE=** *returncode* **ERROR=** *acberflag*

Explanation: TSO/VTAM issues this message when CLOSE ACB failed during the termination of a TSO session with application program *applname*.

returncode provides information about the cause of the failure and is one of the following register 15 values:

Value Meaning

4 (X'04')
One or more ACBs were not successfully closed. Depending on the type of error, the OFLAGS field can indicate that the ACB is closed even though the CLOSE has failed (for example, the ACB might never have been opened).

8 (X'08')
One or more ACBs were not successfully closed. Inspect the ERROR field for the cause of the failure. Another CLOSE macro can be used.

12 (X'0C')
One or more ACBs were not successfully closed. Another CLOSE macro cannot be issued.

acberflag is the value set by VTAM in the ERROR field of the ACB. See the *z/OS Communications Server: IP and SNA Codes* for a description of *acberflag*.

- A nonzero value in this field provides additional information about the cause of the failure.
- If *acberflag* is **0**, this indicates that the operating system rejected the close.

System Action: The session is terminated. Other processing continues.

Operator Response: Save the system log for problem determination.

Programmer Response: Use the system log and the values of *returncode* and *acberflag* to assist you in correcting the problem. For more information about the CLOSE macro, see *z/OS Communications Server: SNA Programming*.

IKT121I TCAS SEND/RECEIVE NOT POSTED FOR TERMINAL *termid*

Explanation: During a logon for the TSO application, TCAS issued a 3270 data stream to a terminal. Terminal *termid* is not responding to the TCAS SEND/RECEIVE request.

This message is issued to the system console, rather than a TSO/VTAM terminal, because TCAS cannot issue an IKT*nnnnn*I message to the terminal for this error.

System Action: The logon is terminated, and the terminal is released by TCAS.

Operator Response: Terminal *termid* has a hardware problem. Save the system log for problem determination. Run your operating system service aid program to determine if MDR/OBR information has been recorded. See the *EREP User's Guide and Reference* for more information on service aid programs.

If you use a network management application such as NetView, check to see if an alert was recorded for this problem.

Programmer Response: If you cannot determine the cause of the problem from the output provided or need additional assistance, contact the IBM hardware support center. If available, provide the MDR/OBR information from your operating system service aid program or the alert information recorded by your network management application.

See the *z/OS Communications Server: SNA Diagnosis Vol 1, Techniques and Procedures* for more information on TSO/VTAM problems and terminal problems. See *z/OS Communications Server: SNA Programming* for information on the SEND and RECEIVE macros.

IKT122I IPADDR..PORT *ipaddr***..***portno*

Explanation: TSO/VTAM issues this message when a TN3270 client attempts to logon to TSO/VTAM but fails to do so.

ipaddr is the dotted decimal representation of the IP address associated with the TN3270 client attempting to logon.

portno is the port number associated with the IP address.

System Action: Processing continues.

Operator Response: Save the system log for problem determination.

Programmer Response: Use the system log, the *ipaddr*, and the *portno* to assist you in correcting the problem.

IKT123I **DNS NAME:** *dns_name*

Explanation: TSO/VTAM issues this message when a TN3270 client attempts to logon to TSO/VTAM but fails to do so.

It is issued when a DNS Name is available and an APPL, CDRSC, or LU resource is associated with a TN3270 connection. This message is optional and will only be displayed if a DNS name is received from the TN3270 Server. If the message ends with the (..) characters, it means that the DNS name was truncated as passed to z/OS CS from the TN3270 Server. Refer to the *z/OS Communications Server: IP Configuration Reference* for information about enabling messages.

dns_name is the DNS NAME of the TN3270 client.

System Action: Processing continues.

Operator Response: Save the system log for problem determination.

Programmer Response: Use the system log and the *dns_name* to assist you in correcting the problem.

IKT124I *dns_name_continued*

Explanation: This message is a continuation of message IKT123I. It is issued as many times as necessary to display the entire DNS name. If the message ends with the (..) characters, it means that the DNS name was truncated as passed to z/OS CS from the TN3270 Server.

dns_name_continued is the continuation of the DNS NAME displayed in IKT123I.

System Action: Processing continues.

Operator Response: Save the system log for problem determination.

Programmer Response: Use the system log and the *dns_name_continued* to assist you in correcting the problem.

Chapter 4. IKT messages for TSO/VTAM terminal users

This chapter lists TSO/VTAM messages that can appear on a terminal user's console.

See the *z/OS Communications Server: SNA Network Implementation Guide* for information on TSO/VTAM. For additional information on diagnosing TSO/VTAM problems, see *z/OS Communications Server: SNA Diagnosis Vol 1, Techniques and Procedures*.

IKT00201I MAXIMUM USERS LOGGED ON, TRY LATER

Explanation: The system operator defines the maximum number of users allowed on the system. This user's attempt to log on exceeds the maximum number allowed. If the user is in a disconnect state, the user can attempt to enter **LOGON** *userid* **RECONNECT**.

IKT00202I INSUFFICIENT STORAGE AVAILABLE FOR REQUIRED CONTROL BLOCKS

Explanation: During the logon process, TCAS issued a GETMAIN to obtain storage for control blocks. The GETMAIN failed, and the LOGON is terminated.

IKT00203I ADDRESS SPACE CREATION FAILED

Explanation: During the logon process, TCAS issues an SVC 34 to obtain address space. The return code indicates that no more storage is available for address spaces. The logon is terminated.

IKT00204I LOGON FAILED, NO USER APPLID AVAILABLE

Explanation: During logon processing, no VTAM application program name was available to assign to the user's address space. The logon is terminated.

IKT00300I LOGON RECONNECT SUCCESSFUL, SESSION ESTABLISHED

Explanation: A TSO/VTAM terminal session was successfully reestablished.

IKT00301I LOGON RECONNECT UNSUCCESSFUL DUE TO SYSTEM ERROR

Explanation: A TSO/VTAM terminal session could not be reestablished because storage for the I/O manager could not be obtained.

IKT00400I INPUT DATA LOST

Explanation: Data was not properly received by VTIOC, data could not be placed on a VTIOC input queue, or data was lost from a VTIOC input queue.

IKT00401I OUTPUT DATA LOST

Explanation: Data was lost from a VTIOC output queue.

IKT00402I REENTER DATA BEGINNING WITH *text*

Explanation: A BREAKIN TPUT occurred during input. *text* indicates the last text received during input processing. Reenter data including what is indicated by *text*.

© Copyright IBM Corp. 1984, 2002

IKT00403I ERROR ON OUTPUT, RETRY IN PROGRESS

Explanation: VTIOC encountered a problem while sending output to the terminal. It is attempting to resend the output.

IKT00405I SCREEN ERASURE CAUSED BY ERROR RECOVERY PROCEDURE

Explanation: TSO/VTAM erased the screen as part of the I/O error recovery procedure.

Chapter 5. IST messages for VTAM network operators IST001I – IST399I

This chapter lists the VTAM messages beginning with IST in the range of IST001I through IST399I. These messages can appear on a network operator's console.

See Appendix E, "Message text for VTAM operator messages" on page 769 for a list of the text of all VTAM operator messages.

Note: Messages that begin with the prefix **ISTF** are issued by the VTAM dump analysis tool and the VTAM internal trace (VIT) analysis tool. Help information is available as a part of each tool by pressing F1. Therefore, **ISTF** messages are not documented in *z/OS Communications Server: SNA Messages*. See *z/OS Communications Server: SNA Diagnosis Vol 1, Techniques and Procedures* for additional information.

IST001I VTAM START REJECTED — *reason*

Explanation: VTAM initialization has been terminated for one of the following *reason*s:

CANNOT LOCATE *name*
Load of module *name* failed.

CANNOT LOCATE *name* **IN ISTCSLOD**
Module *name* could not be located in ISTCSLOD.

CANNOT LOCATE *name* **IN** *library*
Member *name* could not be located in *library*.

ERROR DEFINING TABLE *tablename*
An error occurred while defining table *tablename*.

ESTAE FAILED
An attempt to create an ESTAE exit was unsuccessful. The necessary storage is not available if VTAM abends before initialization has completed.

FAILURE ATTEMPTING TO FIX STORAGE
Not enough real storage is available for VTAM to make required pages nonpageable.

INCONSISTENT VTAM RELEASE STARTED
A different release of VTAM than was previously active was started without re-IPLing MVS/ESA.

INSUFFICIENT 24-BIT CSA AVAILABLE
There is not enough 24-bit CSA storage available to initialize VTAM.

INSUFFICIENT 31-BIT CSA AVAILABLE
There is not enough 31-bit CSA (ECSA) storage available to initialize VTAM.

INVALID ENVIRONMENT
The current release of VTAM has been initialized on an unsupported operating system.

ISTCSLOD SET *name* **AS AN ALIAS**
Either the alias module *name* could not be located in the vector list of its load module or the alias module was loaded before the vector list.

LOAD SUBTASK *name* **INOPERATIVE**
An abend occurred in the directed load subtask *name*.

name **NOT A VALID USS TABLE**
Table *name* did not have the USS table format that VTAM expected.

name **TABLE HAS NO TYPE ID**
Table *name* did not have a valid control block ID field (CBID).

© Copyright IBM Corp. 1984, 2002

IST001I

name **TABLE LOAD HAD I/O ERROR**
An attempt to load table *name* during a search of load library directory data on a disk caused a permanent I/O error.

name **TABLE LOAD HAD I/O TIMEOUT**
An attempt to load table *name* caused a timeout while building a directory entry list from load library directory data on a disk. The disk I/O may be hung.

name **LIBRARY NOT APF AUTHORIZED**
Named VTAM load library is not APF-authorized.

OPERATOR REQUESTED TERMINATION
Termination was selected in response to message IST1216A.

PROCESSING ERROR
VTAM internal resources failed because of a duplicate resource name.

TERMINATION IN PROGRESS
VTAM was terminating during an initialization call.

UNABLE TO ALLOCATE STORAGE
Request for storage has failed during initialization.

System Action: VTAM initialization has terminated. An attempt to start VTAM has failed.

Operator Response: Save the system log for problem determination.

Programmer Response:

CANNOT LOCATE *name*
Verify that *name* is present in the definition library. Verify that SYS1.SISTCLIB is APF authorized. Also, ensure that the linkage editor output from the VTAM generation and maintenance has appropriate entries.

CANNOT LOCATE *name* **IN ISTCSLOD**
Contact the IBM Support Center.

CANNOT LOCATE *name* **IN** *library*
Check the directory of *library*, and determine if *name* is present. If not, add *name* to *library*. If *name* is of the form ATCSTR*xx* or ATCCON*xx*, verify that the *xx* that was specified on the LIST or CONFIG start option correctly identifies the number.

ERROR DEFINING TABLE *tablename*
You must correct the definition of *tablename*. See the *z/OS Communications Server: SNA Resource Definition Reference* for more information.

ESTAE FAILED
Increase the size of VTAM's address space prior to restarting VTAM. See the *z/OS Communications Server: SNA Migration* for help to determine the storage requirements for VTAM.

FAILURE ATTEMPTING TO FIX STORAGE
See the *z/OS Communications Server: SNA Migration* to determine the storage requirements for VTAM.

INCONSISTENT VTAM RELEASE STARTED
If you are trying to start a different release of VTAM than was previously active, you must re-IPL MVS/ESA, then restart the different VTAM release. If you are trying to start the release of VTAM that was previously active, specify the correct release.

INSUFFICIENT 24-BIT CSA AVAILABLE
You must define a sufficient amount of 24-bit CSA storage. See the *z/OS Communications Server: SNA Migration* to determine the amount of 24-bit CSA storage required.

INSUFFICIENT 31-BIT CSA AVAILABLE
You must define a sufficient amount of 31-bit CSA (ECSA) storage. See the *z/OS Communications Server: SNA Migration* to determine the amount of ECSA storage required.

INVALID ENVIRONMENT
Run this VTAM only on MVS/ESA™ licensed processors and operating systems.

ISTCSLOD SET *name* **AS AN ALIAS**
Contact the IBM Support Center.

LOAD SUBTASK *name* **INOPERATIVE**
See the *z/OS Communications Server: SNA Diagnosis Vol 1, Techniques and Procedures* for more information on diagnosing VTAM problems.

name **NOT A VALID USS TABLE**
Check the contents of the CSECT for the table *name*. If errors are found, rebuild the load library with the corrected CSECT.

name **TABLE HAS NO TYPE ID**
Check the contents of the CSECT for the table *name*. If errors are found, rebuild the load library with the corrected CSECT.

name **TABLE LOAD HAD I/O ERROR**
Determine if the disk containing the load library is accessed correctly and access it again if it is not.

name **TABLE LOAD HAD I/O TIMEOUT**
Check the disk and determine whether the problem is poor I/O performance or hung disk I/O for the directed load subtask.

name **LIBRARY NOT APF AUTHORIZED**
Authorize the named VTAM load library.

OPERATOR REQUESTED TERMINATION
None.

PROCESSING ERROR
Check the definition library to ensure that all requirements for VTAM are correct for your system.

TERMINATION IN PROGRESS
None.

UNABLE TO ALLOCATE STORAGE
Use the *z/OS Communications Server: SNA Migration* to determine the storage requirements for VTAM.

IST003I ABEND OCCURRED DURING NETWORK DEFINITION OF CONFIG *configname*, **CODE =** *code*

Explanation: VTAM issues this message when the VTAM network definition of configuration *configname* has abnormally terminated. Network definition occurs:
- During VTAM start processing to process the CONFIG operand
- In response to one of the VARY commands

code is the abend code. See the *z/OS Communications Server: IP and SNA Codes* for a description of *code*.

System Action: *configname* is not defined to VTAM and must be activated or deactivated with a VARY command. Other processing continues.

Operator Response: Save the system log and dump for problem determination.

Programmer Response: Use the system log and the description of *code* to assist you in correcting the problem. See the *z/OS Communications Server: SNA Diagnosis Vol 1, Techniques and Procedures* for information on the abend procedure.

IST009I VTAM IS ALREADY ACTIVE — START REJECTED

Explanation: VTAM issues this message when the operator attempted to start VTAM, and VTAM is already active.

System Action: VTAM ignores the start request.

Operator Response: If you want to restart VTAM, halt the first instance of VTAM.

Programmer Response: None.

IST010I *command* **COMMAND INVALID**

Explanation: VTAM issues this message when the *command* failed because an incorrect command format was entered through the program operator interface. The only valid commands are VARY, MODIFY, and DISPLAY.

The most frequent cause for this message is that a START or HALT command was entered.

System Action: VTAM does not execute *command*. Other processing continues.

Operator Response: Save the system log for problem determination.

Programmer Response: Correct the program operator application. See the *z/OS Communications Server: SNA Programming* for information about writing program operator applications.

IST011I *command* **FOR** *ncpname status*

Explanation: VTAM issues this message in response to a MODIFY DUMP command for NCP *ncpname*.

See Chapter 14, "Command and RU types in VTAM messages" on page 685 for a description of *command*.

status can be one of the following:

COMPLETE
The dump is complete.

FAILED, SENSE = *code*
The dump failed.

REJECTED — NCP LEVEL
The NCP is an NCP release prior to V5R2. MODIFY DUMP,ACTION=PURGE is valid only for NCP V5R2 and later releases.

System Action: Other processing continues.

Operator Response:

COMPLETE
None

FAILED, SENSE = *code*
Check the value of *code* for a possible hardware problem. See the *z/OS Communications Server: IP and SNA Codes* for a description of *code*.

REJECTED — NCP LEVEL
Ensure that you do not enter a MODIFY DUMP command for an NCP release prior to V5R2.

Programmer Response: None.

IST013I **I/O ERROR FOR** *member* **IN** *datasetname*

Explanation: VTAM attempted to load *member* in the data set associated with DDNAME *datasetname* and encountered an I/O error.

System Action: If *member* is critical to VTAM, another message will be issued. Otherwise, VTAM continues processing.

Operator Response: This is probably a hardware error. If *member* is not critical to the VTAM task, but is needed by an application program, halt VTAM and try to restart it with alternate devices or volumes.

If problems persist, save the system log for problem determination. Run your operating system service aid program to determine if MDR/OBR information has been recorded. See the *EREP User's Guide and Reference* for more information on using EREP.

If you use a network management application such as NetView, check to see if an alert was recorded for this problem.

Programmer Response: If you cannot determine the cause of the problem from the output provided or need additional assistance, contact the IBM hardware support center.

If available, provide the MDR/OBR information from your operating system service aid program or the alert information recorded by your network management application.

IST015A **ERROR PROCESSING LIST IDENTIFIER — ENTER LIST ID OR BLANK**

Explanation: VTAM detected an error while processing the LIST start option.

System Action: VTAM waits for a reply to this prompt.

- If a list identifier *xx* is entered, VTAM will attempt to read the specified start list, ATCSTR*xx*.

- If a blank is entered, VTAM will not process any list. It will use the previously processed start options.

After the reply is received, VTAM will process any additional options specified by the operator in response to a previous prompt for start options, or when the START command was entered.

Operator Response: Enter the list identifier specified by your installation (2 characters) or use the previously processed start options by entering a blank.

Programmer Response: Check that the identifier to be used is valid and has been correctly communicated to the VTAM operator, or respond with the identifier for the default start option list.

See the *z/OS Communications Server: SNA Resource Definition Reference* for information on the LIST start option. See the *z/OS Communications Server: SNA Network Implementation Guide* for an explanation of starting VTAM and a description of the types of start options and how start options are processed.

IST018I CONFIG COULD NOT BE INITIALIZED — VTAM START CONTINUES

Explanation: This message is the first in a group of messages that VTAM issues when the network configuration specified on the CONFIG start option could not be initialized. A complete description of the message group follows:

```
IST018I CONFIG COULD NOT BE INITIALIZED — VTAM START CONTINUES
IST523I REASON = reason
IST314I END
```

The second message in the group explains the reason for the failure. *reason* can be one of the following:

ERROR IN CONFIG LIST
The configuration list contains an error. This error may be caused by a missing dataset definition statement.

ERROR READING VTAMLST FILE
The specified configuration list could not be found. For example, CONFIG=*xx* was specified, but there is no corresponding ATCCON*xx* in the appropriate library.

INSUFFICIENT STORAGE
There is not enough storage available.

NAME IN CONFIGURATION LIST IS NOT VALID
The configuration list contains a major node name or a path definition name that does not follow the correct naming convention. VTAM will issue the message, but proceed with the remaining nodes.

System Action: VTAM initialization continues. VTAM ignores nodes in the list after those in error, except names that are not valid. However, if the list itself contains a syntax error, the entire list is ignored.

Operator Response: To make the network usable while this error is being investigated, activate parts (or all) of the network using VARY ACT commands for specific nodes in the network.

- If *reason* is **INSUFFICIENT STORAGE**, enter the DISPLAY BFRUSE command or the DISPLAY STORUSE command. Save the system log and request a dump for problem determination.
- For all other *reason*s, save the system log for problem determination.

Programmer Response:

- If *reason* is **INSUFFICIENT STORAGE**, verify that the operator entered the buffer pool or CSA start options as specified in the start procedures.

  Increase storage as required. For insufficient storage errors, you might want to redefine your buffer pool or CSA start options. If the start option cannot be modified using the MODIFY VTAMOPTS command, you must modify the VTAM start options file (ATCSTRxx) and restart VTAM to use the start option.

  – See the *z/OS Communications Server: SNA Resource Definition Reference* for a description of VTAM start options.
  – See the *z/OS Communications Server: SNA Operation* for information about the DISPLAY BFRUSE Command and the MODIFY VTAMOPTS Command.
  – See the *z/OS Communications Server: SNA Network Implementation Guide* for an explanation and description of buffer pools and for general information on buffer pool specification and allocation.
  – See the *z/OS Communications Server: SNA Diagnosis Vol 1, Techniques and Procedures* for information about analyzing dumps and about analyzing storage using the VIT analysis tool, if external trace is active.

- For all other *reasons*, if you want the specified configuration, halt VTAM and correct the configuration list specified by the start option or a start list. Then have the operator restart VTAM.

IST020I VTAM INITIALIZATION COMPLETE FOR *level*

Explanation: VTAM issues this message when initialization of VTAM is complete. Previous messages identify start options that were not processed.

level is the version (x) and release (y) of VTAM for z/OS Communications Server that is being run. For example, **CSVxRy** is displayed for VTAM for z/OS Communications Server Version x Release y.

This message is followed by message IST1348I, which provides the node type of this host, and message IST1349I, which provides the component identifier of the version of VTAM that is running.

System Action: Processing continues.

Operator Response: You can now enter VTAM network operator commands (VARY, MODIFY, DISPLAY, or HALT) and start VTAM application programs.

If the logon manager has been activated, you should now enter END or CONTINUE in response to message ELM101A.

Programmer Response: None.

IST025I BLDL FAILED FOR *member* **IN** *library*

Explanation: Build link-list failed because VTAM could not find *membe*member in *library* library.

System Action: VTAM issues another message stating the VTAM action taken as a result of this condition.

Operator Response: Save the system log for problem determination.

Programmer Response: Check *library* for *member*. If the *member* does not exist and is needed, add it.

IST033I *command* **COMMAND CANCELLED**

Explanation: VTAM cancelled *command* as a result of unavailable resources. For example, VTAM may not be able to obtain a lock.

command is either the START trace option or the MODIFY TRACE command.

System Action: VTAM does not execute the command.

Operator Response: When the resources become available, reenter the command. If problems persist, save the system log for problem determination.

Programmer Response: Check the system log provided by the operator to ensure that all requirements for VTAM are correct for your system. When you have corrected the error condition, ask the operator to reenter the command.

IST037I *command* **FAILED — SYNTAX ERROR**

Explanation: The *command* failed because of one or more of the following syntax errors:
- Does not have expected delimiters or punctuation
- Has an operand that exceeds 8 characters in length
- May have quotation marks around a keyword
- May have a non-EBCDIC character in one of the operands.

See Chapter 14, “Command and RU types in VTAM messages” on page 685 for a description of *command*.

System Action: VTAM rejects the command. Other processing continues.

Operator Response: Reenter the command with the correct format. For information on command formats, see *z/OS Communications Server: SNA Operation*.

Programmer Response: None.

IST038I VARY FAILED FOR ID = *cdrmname* **— HOST CDRM IS NOT ACTIVE**

Explanation: A VARY ACT command to activate an external cross-domain resource manager *cdrmname* failed because this domain's CDRM has not been activated.

System Action: VTAM rejects the command.

Operator Response: To start a session with *cdrmname*, enter a VARY ACT command to activate the host's CDRM. Enter a DISPLAY ID command for your host's CDRM to make sure that it is active before reentering the command for *cdrmname*.

Programmer Response: None.

IST039I *command* **FAILED — CANNOT IDENTIFY COMMAND TYPE**

Explanation: The *command* does not contain an identifiable keyword that distinguishes the type of command. For example, the VARY command does not contain an identifiable keyword such as ACT, ACQ, or LOGON.

System Action: VTAM rejects the command. Other processing continues.

Operator Response: Reenter the command with the correct keyword. See *z/OS Communications Server: SNA Operation* for a list of operands.

Programmer Response: None.

IST040I START OPTION *option* **REQUIRED — REENTER WHEN PROMPTED**

Explanation: VTAM issues this message when a required start option was either not specified or was specified incorrectly.

option is the name of the start option in error.

System Action: VTAM continues processing the other start options and prompts for additions or corrections. VTAM initialization cannot complete until a valid value for *option* is entered.

Operator Response: Enter the required option when prompted.

Programmer Response: None.

IST043I *value* **INVALID VALUE FOR KEYWORD** *keyword*

Explanation: An unacceptable value was specified for *keyword* in a VTAM operator command. *value* is the first 8 characters of the invalid value.

System Action: VTAM rejects the command.

Operator Response: Correct the keyword *keyword* and reenter the command.

Programmer Response: None.

IST049I VTAM START REJECTED – *macroname* **FOR [**_acbtype_**] ACB FAILED**

Explanation: This message is the first in a group of messages issued when VTAM is terminated because an access method control block (ACB) or SETLOGON macro failed.

macroname is the name of the macro that failed. Possible values are either **OPEN** or **SETLOGON**.

The second message in the group explains the reason for the failure. Possible message groups follow:

- If *macroname* is **OPEN**, the following message group is displayed.

```
IST049I   VTAM START REJECTED – OPEN FOR [acbtype] ACB FAILED
IST1218I  ACB ERROR FIELD = acberflg
IST314I   END
```

IST049I

acbtype describes the ACBs associated with VTAM and indicates which host ACB failed.

- If the **OPEN** ACB failed for a control point, *acbtype* is **CP**.

- If the **OPEN** ACB failed for an SSCP, *acbtype* is not displayed.

IST1218I

acberflg is the error field of the ACB. It is a hexadecimal value returned by the OPEN macro and indicates the specific nature of the error encountered. See the *z/OS Communications Server: IP and SNA Codes* for a description of *acberflg*.

- If *macroname* is **SETLOGON**, the following message group is displayed.

```
IST049I   VTAM START REJECTED – SETLOGON FOR [acbtype] ACB FAILED
IST1219I  RTNCD = rtncd, FDB2 = fdb2
IST314I   END
```

IST049I

acbtype describes the ACBs associated with VTAM and indicates which host ACB failed.

- If the **SETLOGON** ACB failed for a control point, *acbtype* is **CP**.
- If the **SETLOGON** ACB failed for an SSCP, *acbtype* is not displayed.

IST1219I

rtncd is the error field RPLRTNCD. It is a hexadecimal value returned by the SETLOGON macro.

fdb2 is the feedback field RPLFDB2. It is a hexadecimal value returned by the SETLOGON macro.

See the *z/OS Communications Server: IP and SNA Codes* for a description of the *rtncd-fdb2* combination.

System Action: VTAM is terminated.

Operator Response: Save the system log for problem determination.

Programmer Response: Use the system log and return code information to assist you in correcting the problem.

For a description of *acberflg* in IST1218I, see the *z/OS Communications Server: IP and SNA Codes*.

For a description of the *rtncd-fdb2* combination in IST1219I, see the *z/OS Communications Server: IP and SNA Codes*.

For additional information on the OPEN and SETLOGON macros, see *z/OS Communications Server: SNA Programming* .

IST050I *command* **COMMAND REJECTED — OPEN FOR VTAM DATA SET** *datasetname* **FAILED**

Explanation: In response to a *command*, VTAM attempted to open data set *datasetname*, which could not be opened but is required to continue processing.

System Action: VTAM rejects the command. Other processing continues.

Operator Response: Ensure that you entered the command correctly. If the problem persists, save the system log for problem determination.

Programmer Response: Check the output provided by the operator to ensure that all requirements for VTAM are correct for your system. Review the system definition, the VTAM definition statement, and the VTAM start procedure. Verify VTAM data set construction and allocation. When you have corrected the error condition, ask the operator to reenter the command.

IST051A ENTER VTAM START PARAMETERS

Explanation: VTAM issues this message when the PROMPT start option was coded in the default start list, ATCSTR00. VTAM is prompting the operator to enter start options to override the default start options already stored or to provide additional options.

System Action: VTAM waits for the reply and then processes the options entered.

Operator Response: Do one of the following:

- Enter the start options recommended by the system programmer or contained in your operator instructions. (If you cannot fit all the required start options on one line, put a comma after the last option on the line. This causes message IST1311A to be issued, allowing you to specify more start options.)
- Enter a blank to cause VTAM to use the start options from the default start list.

Note: If you enter a LIST start option, ensure that you enter it correctly. VTAM will not give you an opportunity to correct a spelling error. You cannot enter the LIST start option in response to message IST1311A. See the *z/OS Communications Server: SNA Resource Definition Reference* for more information on VTAM start options.

Programmer Response: None.

IST052I *parameter* **IS AN INVALID START OPTION KEYWORD – IGNORED**

Explanation: The operator specified parameter *parameter* as a VTAM start option, but this is an invalid keyword.

System Action: VTAM ignores this option and continues processing any other start options.

Operator Response: When prompted by VTAM, enter the correct keyword and options, or enter a blank to indicate that you do not wish to enter any options.

Programmer Response: None.

IST054I *member* **IN** *library* **{NOT FOUND|IS EMPTY} – START PROCESSING CONTINUES**

Explanation: VTAM issues this message during start processing when a specified library member is empty or is not found.

member is either **ATCSTR00** or **ATCSTR***xx*, where *xx* is from the LIST start option.

library is the DDNAME specified for the definition library.

System Action: VTAM ignores *member* and continues processing the other start options.

Operator Response: Save the system log for problem determination.

Programmer Response: Verify that *member* was either intentionally left empty or not found. If *member* is necessary to your system, halt and restart VTAM with the correct library member.

IST056A **LIST =** *listid* **IS INVALID — ENTER LIST ID OR BLANK**

Explanation: The value specified for *listid* in the LIST start option is invalid. One of the following is true:

- No corresponding member exists for this identifier.
- The identifier is more than the allowable 2 characters long. If more than 3 characters were entered, only the first 3 are printed in the message.
- The identifier contains characters other than the allowed alphanumeric characters.

System Action: VTAM waits for a reply to this message.

Operator Response: If you enter an identifier in response to this message, VTAM will attempt to process the options in the definition library.

If you select a default list, VTAM will prompt you to enter individual start options. Do one of the following:

- Determine the correct identifier, and enter it.
- Invoke the default list by entering a blank.

Programmer Response: Ensure that the specified member actually exists. See the *z/OS Communications Server: SNA Resource Definition Reference* for more information on VTAM start options.

IST057I **KEYWORD MISSING AFTER TRACE/NOTRACE OPTION ON START PARMS**

Explanation: VTAM issues this message when a required keyword did not follow the TRACE or NOTRACE keyword in the start options.

System Action: VTAM does not process the TRACE or NOTRACE options but continues to process any remaining start options.

Operator Response: Correct the trace option by responding to IST1311A or ignore the error by entering a blank.

Programmer Response: Examine the VTAM start options contained in ATCSTR*xx*, and verify that the correct options are specified. Refer to the *z/OS Communications Server: SNA Resource Definition Reference* to verify the appropriate options for ID or TYPE keywords on the TRACE/NOTRACE start option and for more information about VTAM start options.

IST058I *keyword1* **AND** *keyword2* **OPTIONS HAVE DUPLICATE VALUES**

Explanation: The same value was specified for start options *keyword1* and *keyword2*. This situation occurs when you enter values for the HOSTPU and SSCPNAME start options or two VTAM coupling facility structures have been assigned the same name.

System Action: If *keyword1* is HOSTPU and *keyword2* is SSCPNAME, then HOSTPU defaults to ISTPUS. VTAM issues message IST1311A, which prompts you to reenter any start option overrides.

Operator Response: If the duplicate keywords were in a start list, save the system log for problem determination. If not, enter any start option overrides when prompted by message IST1311A. For coupling facility structures, you will continue getting prompted with IST1311I until the options specified by *keyword1* and *keyword2* have unique values.

Programmer Response: If the duplicate keywords were in a start list, change them so that they have unique values. See the *z/OS Communications Server: SNA Network Implementation Guide* for more information about VTAM coupling facility structures. See the *z/OS Communications Server: SNA Resource Definition Reference* for more information on VTAM start options.

IST059I *text* **IGNORED – INSUFFICIENT STORAGE**

Explanation: VTAM could not obtain sufficient storage to complete the operation indicated by *text*:

TRACE FOR *nodename*
A TRACE start option for node *nodename*.

PATH *pathname* **FOR** *nodename*
Update of dynamic path update set named *pathname* for node *nodename*.

System Action: If *text* indicates:

TRACE FOR *nodename*
If *nodename* is **VTAM** and you are trying to start an internal trace (for example, type=VTAM), initialization continues without a VTAM internal trace table.

If *nodename* is anything other than **VTAM**, VTAM issues message IST1311A, which prompts you to reenter any start option overrides.

PATH *pathname* **FOR** *nodename*
VTAM does not update dynamic path update set *pathname*.

Operator Response: Wait a short time and reenter the command. If VTAM continues to issue this message, enter the DISPLAY BFRUSE command. Enter the DISPLAY STORUSE command to display storage usage for storage pools. Save the system log and request a dump for problem determination.

For a VTAM internal trace, enter a MODIFY TRACE command, specifying a smaller buffer size.

Programmer Response: Verify that the operator entered the buffer pool or CSA start options as specified in the start procedures.

Increase storage as required. For insufficient storage errors, you might want to redefine your buffer pool or CSA limits. If the start option cannot be modified using the MODIFY VTAMOPTS command, you must modify the VTAM start options file (ATCSTRxx) and restart VTAM to use the start option.

- See the *z/OS Communications Server: SNA Migration* to determine the storage requirements for VTAM.
- See the *z/OS Communications Server: SNA Resource Definition Reference* for a description of VTAM start options.
- See the *z/OS Communications Server: SNA Operation* for information about the DISPLAY BFRUSE Command, the DISPLAY STORUSE Command, and the MODIFY VTAMOPTS Command.
- See the *z/OS Communications Server: SNA Network Implementation Guide* for an explanation and description of buffer pools and for general information on buffer pool specification and allocation.
- See the *z/OS Communications Server: SNA Diagnosis Vol 1, Techniques and Procedures* for information about analyzing dumps and about analyzing storage using the VIT analysis tool, if external trace is active.

IST061I *command* **FOR** *nodename* **FAILED — NODE UNKNOWN TO VTAM**

Explanation: The operator entered a *command* for a resource *nodename* that is not defined to VTAM. A null name (one consisting entirely of blanks) is also an identifier that is not valid.

System Action: VTAM rejects the command.

Operator Response: Ensure that you entered the command correctly.

- If you were trying to activate a minor node, the message indicates that there is no such minor node in any currently active major node. In this case, the major node containing minor node *nodename* must be activated first. You can issue the DISPLAY MAJNODES command to determine which major nodes are active.
- If you were trying to activate a major node, the message indicates that there is no such major node in the definition library.
- If you were trying to deactivate either a major or minor node, the message indicates that there is no such node currently defined to VTAM.

Save the system log for problem determination.

Programmer Response: Validate that *nodename* is correct, and provide the operator with the correct name. If necessary, change the VTAM definition statements to use the correct name.

IST066I *command* **FAILED — CONFLICTING OR INVALID OPTIONS**

Explanation: The operator entered the *command* with an operand or combination of operands that was not valid. Two or more options may be mutually exclusive, or a particular option may be valid only for some types of nodes. This message may also occur when an NCP or channel-to-channel adapter is already activated with different parameters.

System Action: VTAM rejects the command.

Operator Response: Ensure that you entered the command correctly. If the problem persists, save the system log and print the major node definition for problem determination.

Programmer Response: Check the command description for restrictions on the use of operands.

- If this message was the result of the activation of a major node that was already active, such as an NCP, the conflict is probably between an operand on the command and either:
  - An operand on a definition statement, or
  - An operand specified on the prior activation.
- If the major node in question is not active, instruct the operator to simply reenter the command with corrected options.
- If, however, the major node is already active and the conflict is between an operand specified on the new activation and the one used on a prior activation, you will need to deactivate the major node if the new operand is required, then reactivate it.

Note: Deactivating the major node will disrupt any active sessions that use the node.

IST072I *command* **FOR ID =** *nodename* **FAILED DURING NETWORK DEFINITION**

Explanation: VTAM issues this message when the *command* entered to activate or acquire the major node *nodename* failed during network definition.

command is the command that failed. Possible values of *command* and the cause of the error can be one of the following:

VARY ACT or VARY ACQ
The VARY ACT or VARY ACQ command for a major node definition is in error.

VARY DRDS
Processing of a VARY DRDS (dynamic reconfiguration data set) command failed, and the entire definition was rejected.

MODIFY DR
A MODIFY DR command failed.

nodename is the name of the major node specified on the command.

System Action: The command fails. The major node or DRDS definition and its resources remain inactive, and VTAM cannot use them.

Operator Response: Save the system log and print the major node definition for problem determination.

Programmer Response: Previous messages provide information about the cause of the failure.

- If this is a definition error, correct the major node definition or DRDS definition to resolve the problem before the operator reenters the command.
- If this is not a definition error, tell the operator to reenter the command using the correct major node name. See *z/OS Communications Server: SNA Operation* for more information about *command*.

IST073I *command* **FOR ID =** *nodename* **FAILED — MORE POWERFUL REQUEST IN PROGRESS**

Explanation: VTAM issues this message when the *command* fails because *nodename* has a deactivation request pending.

Note: If the command was a VARY INACT command, the pending deactivation is of a stronger type (Immediate or Force).

System Action: VTAM rejects the command.

Operator Response: Monitor the progress of the deactivation by using the DISPLAY command. When *nodename* is deactivated, reenter the command.

Programmer Response: None.

IST074I *command* **FOR ID =** *nodename* **FAILED — INSUFFICIENT STORAGE**

Explanation: A *command* for *nodename* failed because VTAM could not obtain a work area to process the request.

System Action: VTAM rejects the command.

Operator Response: Messages IST561I, IST562I, IST563I, IST564I, IST565I or IST566I may be issued prior to this message to indicate the type of storage affected.

Enter the DISPLAY BFRUSE command to display storage used by VTAM buffer pools and information about the common service area (CSA). Total VTAM private storage information is also displayed in message IST981I. Enter the DISPLAY STORUSE command to display storage usage for storage pools.

Save the system log and request a dump for problem determination.

If *nodename* is an independent logical unit that is being converted to a definition for a resource in another domain, then the NCP major node for *nodename* must be deactivated. Activate the NCP major node when the storage shortage no longer exists.

Programmer Response: Verify that the operator entered the buffer pool or CSA start options as specified in the start procedures.

Increase storage as required. For insufficient storage errors, you might want to redefine your buffer pool or CSA limits. If the start option cannot be modified using the MODIFY VTAMOPTS command, you must modify the VTAM start options file (ATCSTRxx) and restart VTAM to use the start option.

- See the *z/OS Communications Server: SNA Migration* to determine the storage requirements for VTAM.
- See the *z/OS Communications Server: SNA Resource Definition Reference* for a description of VTAM start options.
- See the *z/OS Communications Server: SNA Operation* for information about the DISPLAY BFRUSE Command, the DISPLAY STORUSE Command, and the MODIFY VTAMOPTS Command.
- See the *z/OS Communications Server: SNA Network Implementation Guide* for an explanation and description of buffer pools and for general information on buffer pool specification and allocation.
- See the *z/OS Communications Server: SNA Diagnosis Vol 1, Techniques and Procedures* for information about analyzing dumps and about analyzing storage using the VIT analysis tool, if external trace is active.

IST075I **NAME =** *name*, **TYPE =** *type*

Explanation: This message is part of several different message groups that VTAM issues in response to one of the following commands:
- DISPLAY ID=*nodename*
- DISPLAY LUGROUPS
- DISPLAY MODELS, ID=model_name
- DISPLAY TRACES,TYPE=NODES,ID=*nodename1, nodename2,..., nodenamen*
- DISPLAY TRACES,TYPE=NODES,ID=*
- DISPLAY TRACES,TYPE=ALL
- DISPLAY TRL,TRLE=*trl_element*
- DISPLAY TSOUSER,ID=*nodename*
- DISPLAY TRACES,TYPE=EXIT,ID=*exitname*
- DISPLAY VTAMSTOR,NETADDR=(subarea_address,element_address)
- DISPLAY VTAMSTOR,RESOURCE=resource_name
- MODIFY NOTRACE,TYPE=EXIT,ID=*exitname*,OPT=*optionlist*
- MODIFY TRACE,TYPE=EXIT,ID=*exitname*,OPT=*optionlist*.

name is the name of the resource or ID type that is displayed.

See Chapter 15, “Node and ID types in VTAM messages” on page 697 for a description of *type*.

System Action: Processing continues.

Operator Response: None.

Programmer Response: None.

IST077I **SIO =** *sio* **CUA =** *device_address* **[, SLOWDOWN = YES]**

Explanation: VTAM issues this message in response to a DISPLAY ID command requesting the status of a channel-attached node. For a DISPLAY ID command for a local NCP, this message is issued for every channel-attached link station defined from the host to the PU type 4.

sio is the number of start I/O operations counted for the channel. This number is cumulative (from the time that the node was last activated) and is expressed in decimal. The value of *sio* is never larger than 65535. If *sio* is 65535, its value is reset to 0 when the next start I/O operation takes place.

device_address is the hexadecimal address of the channel-attached device. This field contains ***NA** if the device address is not available.

SLOWDOWN=YES, if present, indicates that the node is in slowdown.

System Action: Processing continues.

Operator Response: None.

Programmer Response: None.

IST080I *resource1 status1 resource2 status2 resource3 status3*

Explanation: This message is part of a group of messages that VTAM issues in response to one of the following commands:

DISPLAY APPLS command
This message lists the resources and gives the status of each.

DISPLAY ID command
This message lists the resources and gives the status of each.

DISPLAY LINES command
This message lists the resources and gives the status of each.

DISPLAY LUGROUPS command
This message lists the resources but does not display status since *resource* represents a symbolic resource name.

DISPLAY PENDING command
This message lists the resources and gives the status of each.

DISPLAY TERMS command
This message lists the resources and gives the status of each.

If there are more than three nodes, the message is repeated as many times as necessary to display all the nodes. This message is preceded by a message that identifies the type of resources that are listed.

resource is the name of the resource.

If a DISPLAY APPLS, DISPLAY ID, DISPLAY LINES, DISPLAY PENDING, or DISPLAY TERMS command was entered, see the *z/OS Communications Server: IP and SNA Codes* for *status* information.

If a DISPLAY LUGROUPS command was entered, the *status* field is blank.

See *z/OS Communications Server: SNA Operation* for information on commands. See the *z/OS Communications Server: SNA Resource Definition Reference* for information on LUGROUPS.

System Action: Processing continues.

Operator Response: None.

Programmer Response: None.

IST081I LINE NAME = *linename*, **LINE GROUP =** *groupname*, **MAJNOD =** *nodename*

Explanation: VTAM issues this message in the following situations:

- In response to a DISPLAY ID command
- When a connection request for resource *nodename* in message IST680I has been rejected. See the description of IST680I for more information.
- When a switched connection between VTAM and a physical unit was unsuccessful because the station identifier *stationid* displayed in message IST690I did not resolve to a node name in an active switched major node. See the description of IST690I for more information.

linename is the line to which *nodename* is connected.

groupname is the line group to which the line *linename* belongs.

nodename is the major node with which the line is associated.

System Action: Processing continues.

Operator Response: None.

Programmer Response: None.

IST082I DEVTYPE = *devicetype* **[, CONTROLLING LU =** *luname***]**

Explanation: This message is part of a group of messages that VTAM issues in response to a DISPLAY ID command.

devicetype is the device type. If *devicetype* is **INDEPENDENT LU / CDRSC**, the node is an independent LU that is represented by a CDRSC.

luname is the name of the controlling LU that was previously specified on the LOGAPPL operand of the definition statement or on the LOGON operand of the VARY LOGON command. If there is no controlling application program, VTAM does not display **CONTROLLING LU =** *luname*.

System Action: Processing continues.

Operator Response: None

Programmer Response: None.

IST084I NETWORK RESOURCES:

Explanation: This message is the first in a group of messages that VTAM issues in response to a DISPLAY ID command requesting status of a line, local SNA major node, or switched SNA major node. The message immediately following this message will provide details about subordinate nodes associated with the displayed node.

System Action: Processing continues.

Operator Response: None.

Programmer Response: None.

IST085I DISPLAY FAILED — INFORMATION NOT AVAILABLE

Explanation: VTAM cannot execute a DISPLAY PATHTAB or a DISPLAY STATS,TYPE=CFS command because VTAM cannot gather the requested information.

If the operator specified ADJSUB on the DISPLAY PATHTAB command, there are no routes passing through the named adjacent subarea. If the operator specified DESTSUB on the DISPLAY PATHTAB command, there are no routes going to the named destination subarea.

If the message was issued in response to a DISPLAY STATS,TYPE=CFS command, it will be followed by message IST1366I. See the description of that message for more information.

System Action: VTAM rejects the command.

Operator Response: For the DISPLAY PATHTAB command ensure that you entered the command correctly. If problems persist, save the system log for problem determination.

For the DISPLAY STATS,TYPE=CFS command see the description of message IST1366I.

Programmer Response: For the DISPLAY PATHTAB command see the *z/OS Communications Server: SNA Diagnosis Vol 1, Techniques and Procedures* for more problem determination information.

For the DISPLAY STATS,TYPE=CFS command see the description of message IST1366I.

IST087I TYPE = *line_type*, **CONTROL =** *line_control*, **HPDT =** *hpdtvalue*

Explanation: This message is part of several different message groups that VTAM issues in response to DISPLAY ID or DISPLAY TRL commands.

line_type indicates the type of line and can be one of the following:

LEASED

SWITCHED DIAL-IN

SWITCHED DIAL-OUT

SWITCHED DIAL-INOUT

line_control can be one of the following:

BSC
Binary synchronous communication

CTCA
Channel-to-channel attached

MPC
Multipath channel

NCP
Channel-attached NCP

SDLC
Synchronous data link control

SS Start-stop

TCP
Transmission Control Protocol

USER
User-defined protocol

XCF
Cross-system coupling facility

hpdtvalue can be one of the following:

YES
Indicates the connection is capable of performing channel I/O directly to or from communications storage manager (CSM) buffers.

NO
Indicates the connection is not capable of performing channel I/O directly to or from communications storage manager (CSM) buffers.

NA
Is displayed when *line_control* is not MPC or when the connection is not active.

System Action: Processing continues.

Operator Response: None.

Programmer Response: None.

IST089I *nodename* **TYPE =** *search=nodeid.nodetype*, *search=rescd.status* **{[,CUA=***device_address***] | [, PHYS=***puname***]}**

Explanation: This message is part of several different message groups that VTAM issues in response to DISPLAY ID commands or DISPLAY commands that display the status of a particular category of resources in a domain.

nodename is the name of the resource or ID type that is displayed.

See Chapter 15, “Node and ID types in VTAM messages” on page 697 for a description of *nodetype*.

See the *z/OS Communications Server: IP and SNA Codes* for a description of *status*.

device_address is the hexadecimal channel address of the node. It provides attachment for the communication controller normally attached by the physical unit type 4 *nodename*. VTAM issues ***NA** if *device_address* is not available.

puname is the name of the PU that is the physical resource for *nodename* and is specified on the PHYSRSC operand of the GROUP definition statement. *puname* is issued only with **TYPE=LINE** or **TYPE=LINE GROUP**.

If the physical unit, defined in the NCP definition, whose name is specified by the PHYSRSC keyword is a switched PU that is not currently connected, then *highernode* is the physical line.

System Action: Processing continues.

Operator Response: For more information about *nodename*, enter a DISPLAY ID command.

Note: The DISPLAY ID command is not valid for model LU or PU nodes. For more information about a model LU or PU node, enter a DISPLAY MODELS command.

Programmer Response: None.

IST092I **REQUESTED** *limit* **LESS THAN CURRENT ALLOCATION – REQUEST {REJECTED|ACCEPTED}**

Explanation: The value specified on the CSALIMIT start option, the CSA24 start option, or the MODIFY CSALIMIT command, is less than the common service area (CSA) size currently being used by VTAM. VTAM rejects a MODIFY CSALIMIT request unless F was indicated in the command to force the change.

During VTAM start, the requested start option is always rejected.

limit is one of the following:

- **CSALIMIT**, which indicates total CSA
- **CSA24 LIMIT**, which indicates CSA below 24-bit addressable storage.

System Action:

- If **ACCEPTED** is indicated, the operator entered a MODIFY CSALIMIT command with the F operand.

  VTAM sets the *limit* to the new value specified in the command.
- If **REJECTED** is indicated after the operator entered a MODIFY CSALIMIT command, VTAM rejects the command and the *limit* remains unchanged.
- If **REJECTED** is indicated during VTAM start, VTAM rejects the command, the *limit* remains unchanged, and the operator is prompted to enter an acceptable (larger) value for *limit*.

Operator Response: If VTAM accepts the request, no action is required. If VTAM rejects the request:

- For a START command, reenter either the CSALIMIT option or the CSA24 option with an acceptable (larger) value.
- **Warning:**

  If the specified *limit* is too low and you force this limit to take effect by using the F operand of the MODIFY CSALIMIT command, you cannot enter other VTAM commands (except HALT and CANCEL) until usage falls below the specified limit. This is because this storage is needed to process all VTAM operator commands except HALT or CANCEL.

  If the CSA usage does not fall below the new level, you can use the MODIFY VTAMOPTS command to revise the CSALIMIT value. Verify that circumstances warrant limiting the amount of common service area (CSA) available to VTAM to an amount less than the size that is already in use.

Programmer Response: If necessary, redefine either CSALIMIT or CSA24 limit with an appropriate value. Otherwise, no response is necessary.

IST093I *nodename* **ACTIVE**

Explanation: VTAM issues this message in response to a VARY command when resource *nodename* has been successfully activated. Active states of resources include the connectable (CONCT) state.

Notes:

1. If you specify or accept the default value BASE for the MSGLVL option, you receive this message twice if the resource is the host SSCP. See Appendix D, “Messages affected by the MSGLVL option” on page 757 for additional information.
2. If you are expecting this message to confirm activation of a resource and it is not issued, this can occur if the VARY command was overridden by other VTAM processing.

   For example, if an NCP INOPs prior to completion of a VARY ACT command and recovery is attempted, then VTAM activates the resource rather than the operator command. In this situation, message IST493I or IST1141I may be displayed indicating that the VARY ACT command was overridden.

System Action: Processing continues.

Operator Response: None.

Programmer Response: None.

IST095A OPTION TO DUMP *controller* **AVAILABLE — REPLY ‘YES’ OR ‘NO’ OR ‘YES,DUMPSTA=***linkstaname***’**

Explanation: This message prompts the VTAM operator to determine whether VTAM should dump the communication controller associated with the network control program represented by *controller*.

The prompt occurs when the communication controller has failed and AUTODMP has not been specified on the PCCU macro. Therefore, the operator can choose whether or not to dump the contents of the communication controller.

System Action: VTAM waits for a valid reply.

Operator Response:

- Reply YES for a dump of the contents of the communication controller using the link station specified at NCP generation or by the VARY ACT command.
- Reply YES,DUMPSTA=*linkstaname*, where *linkstaname* is the value coded for the DUMPSTA operand of the PCCU macro in the NCP generation.

  If you specify YES,DUMPSTA= without naming the link station, VTAM selects a default dump station.
- Reply NO if you do not want to dump the contents of the communication controller.

Notes:

1. You should have instructions from the system programmer as to which of the replies you should enter at your console. Operators of multiple-channel or multiple-link attached communication controllers should avoid replying YES simultaneously to this message. Only one operator should reply YES to this message. Other operators should wait for that operator’s dump to be completed and then should enter NO.
2. For additional information on how to respond to this message, see “Responding to a VTAM message” on page 2.

Programmer Response: None.

IST096I *command* **FAILED — DUPLICATE** *parameter* **PARAMETERS SPECIFIED**

Explanation: VTAM issued this message when *parameter* was specified more than once in the *command*.

System Action: VTAM rejects the command. Other processing continues.

Operator Response: Reenter the command as many times as necessary, but specify *parameter* only once each time.

Programmer Response: None.

IST097I *command* **ACCEPTED**

Explanation: VTAM accepted the *command* for initial processing. See Chapter 14, “Command and RU types in VTAM messages” on page 685 for a description of *command*.

System Action: The syntax of the command is correct and VTAM begins processing *command*.

Operator Response: Wait until VTAM completes any command for a node before entering another affecting that node.

Programmer Response: None.

IST101I *command* **FAILED —** *operand_name* **NOT SPECIFIED**

Explanation: VTAM issues this message when the *command* was entered without the required operand *operand_name*.

See Chapter 14, “Command and RU types in VTAM messages” on page 685 for a description of *command*.

System Action: VTAM rejects the command. Other processing continues.

Operator Response: Reenter the command with the required operand. See *z/OS Communications Server: SNA Operation* for more information about *command*.

Programmer Response: None.

IST102I **VTAM IS NOW INACTIVE**

Explanation: VTAM has terminated, either because of an error or because of a HALT command.

System Action: System processing continues. VTAM processing stops.

Operator Response: No response is required unless you need to restart VTAM. In that case, follow your normal VTAM start procedure.

Programmer Response: None.

IST105I *nodename* **NODE NOW INACTIVE**

Explanation: The operator successfully deactivated the node *nodename*. In most cases, this is the result of a VARY INACT command. If *nodename* is a cross-domain resource manager (CDRM) in another domain, then deactivation could be the result of a deactivation request from the domain of *nodename*.

System Action: Processing continues.

Operator Response: None.

Programmer Response: None.

IST107I **TIME AND DATE NOT SET IN** *ncpname* **DUE TO INVALID TIMER IN HOST**

Explanation: VTAM found the time-of-day clock in the host processor to be in error or not operational. Therefore VTAM did not set the time and the date in the NCP *ncpname* after it was loaded.

System Action: VTAM completes activation of *ncpname* normally except for setting the time and date.

Operator Response: If time and date are required in the communication controller, deactivate the NCP, set the time-of-day clock in the host processor, and reactivate the NCP.

Programmer Response: None.

IST109I *function* **IS NOW TERMINATED**

Explanation: VTAM issues this message when an ABEND occurred while processing was in the tuning statistics (TNSTAT) subtask.

function will always be TNSTAT.

System Action: Tuning statistics support ended.

Operator Response: See the *z/OS Communications Server: SNA Diagnosis Vol 1, Techniques and Procedures* for information about collecting documentation for an abnormal end (ABEND.)

Programmer Response: See the *z/OS Communications Server: SNA Diagnosis Vol 1, Techniques and Procedures* for information about collecting documentation for an abnormal end (ABEND) then contact the IBM Software Support Center for service.

IST113I *uservar* **IS A USERVAR WITH VALUE** *value* **IN NETWORK** *netid*

Explanation: VTAM issues this message in response to a DISPLAY SESSIONS or DISPLAY ID=*uservar* command.

uservar is a user-defined name for a network resource with the value of *value* in network *netid*.

If *uservar* is both a user variable and a network resource, VTAM will display the resource and ignore the user variable value. Otherwise, VTAM will display the resource represented by the value of the USERVAR, *value*. Message IST075I contains the name of the resource being displayed for DISPLAY ID.

System Action: Processing continues.

Operator Response: None.

Programmer Response: None.

IST115I **INSUFFICIENT STORAGE TO READ** *member* **MEMBER OF VTAM DEFINITION LIBRARY**

Explanation: VTAM issues this message when insufficient storage existed in the common service area (CSA) or partition to read *member* in the definition library. A subsequent message indicates which VTAM function is affected.

System Action: See the **System Action** of the next message that appears on the console.

Operator Response: Wait a short time and reenter the command. If VTAM continues to issue this message, enter the DISPLAY BFRUSE command. Enter the DISPLAY STORUSE command to display storage usage for storage pools. Save the system log and request a dump for problem determination.

Programmer Response: Verify that the operator entered the buffer pool or CSA start options as specified in the start procedures.

Increase storage as required. For insufficient storage errors, you might want to redefine your buffer pool or CSA limits. If the start option cannot be modified using the MODIFY VTAMOPTS command, you must modify the VTAM start options file (ATCSTRxx) and restart VTAM to use the start option.

- See the *z/OS Communications Server: SNA Resource Definition Reference* for a description of VTAM start options.
- See the *z/OS Communications Server: SNA Operation* for information about the DISPLAY BFRUSE Command, the DISPLAY STORUSE Command, and the MODIFY VTAMOPTS Command.
- See the *z/OS Communications Server: SNA Diagnosis Vol 1, Techniques and Procedures* for information about analyzing dumps and about analyzing storage using the VIT analysis tool, if external trace is active.

IST116I **MEMBER** *member* **NOT FOUND ON VTAM DEFINITION LIBRARY**

Explanation: VTAM searched the definition library, and failed to locate *member*. A subsequent message indicates which VTAM function is affected.

System Action: If *member* is a resource specified in a VARY ACT command, the VARY ACT command fails. If *member* is a model name table or an associated LU table, the table is not defined, but the VARY ACT command is not affected.

Operator Response: If VTAM issues this message because the USSTAB start option is not valid, you can enter a

MODIFY TABLE command to supply a new USS table represented by ISTNOP. Save the system log for problem determination.

Programmer Response: Check the VTAM definition library, and correct the problem.

IST117I I/O ERROR READING *member* **MEMBER OF VTAM DEFINITION LIBRARY**

Explanation: An I/O error prevented VTAM from reading *member* in the definition library.

System Action: See the **System Action** of the next message that appears on the console.

Operator Response: See the **Operator Response** of the next message that appears on the console.

Programmer Response: See the **Programmer Response** of the next message that appears on the console.

IST118I ANOMALY FOUND NEAR RECORD *count* **IN MEMBER** *member* **– CODE =** *code*

Explanation: VTAM detected inconsistent syntax in the coding of a definition statement within *member* in the definition library.

VTAM issues this message when the syntax used in the statement being processed leaves the intent of the statement unclear. The message does not indicate a syntax error. The error is probably an error of omission or text placement.

count is the approximate count of 80-byte logical records read from the beginning of the member (including all comment lines) to the point of detection. This number will be equivalent to the line or record number seen for that record when the member is viewed under an editor.

code can be one of the following:

Code	Description
2	While processing major node *member*, VTAM detected a record that ended in a command, indicating continuation, but column 72 was blank, indicating no continuation records follow. Major node activation continues.
3	While processing major node *member*, VTAM detected a properly structured record with a non-blank character in column 72, indicating continuation. However, the continuation record began in column 17 or beyond, which caused VTAM to consider it a comment and ignore it. A scan of the ignored record shows that it contains an equal sign (=), and might therefore contain operands which were not intended to be ignored.
4	While processing major node *member*, VTAM detected a record containing an asterisk (*) in column 1, indicating that it is a full-line comment. Column 72 contained a nonblank character, indicating to VTAM that the next record should also be treated as a comment. VTAM will consider each proceeding line a comment, and ignore it, until it reads a record in which column 72 is blank, indicating that the records should no longer be considered a comment. This code will be issued for each of the ignored records, which will most likely be sequential records in a group.

System Action: Processing continues.

Operator Response: Save the system log for problem determination.

Programmer Response: Use the information provided by *member*, *count*, and *code* to confirm that the syntax of the record is correct. If the syntax is correct, then this message may be ignored, or you may restructure the text to eliminate the message.

IST120I NODE *nodename* **NOW HAS CONTROLLING LU** *luname*

Explanation: VTAM has finished processing the LOGON operand of either a VARY ACT or VARY LOGON command. When logical unit *nodename*, or the logical units associated with *nodename*, are not in session with another application program, VTAM will automatically log them on to application program *luname*. Resources must be active in order for the logon to complete. This does not mean that a session with the application program has been initiated.

System Action: Processing continues.

Operator Response: None.

Programmer Response: None.

IST122I ATTACH OF VTAM SUBTASK *subtask* **FAILED**

Explanation: VTAM cannot attach one of the VTAM subtasks, *subtask*, because VTAM could not find the named subtask on SYS1.LINKLIB.

System Action: A message will follow indicating the action that the system takes as a result of this error.

Operator Response: Save the system log for problem determination.

Programmer Response: Make sure that *subtask* is in the system library and restart VTAM.

IST124I STOP COMMAND REJECTED — NOT SUPPORTED FOR VTAM

Explanation: The operator entered a STOP command for the VTAM task. VTAM does not support this command.

System Action: VTAM rejects the command. Other VTAM processing continues.

Operator Response: To stop the VTAM task, enter a HALT command.

Programmer Response: None.

IST126I *modename* **MODE NOT SUPPORTED DUE TO LOADING FAILURE**

Explanation: VTAM cannot load *modename*.

System Action: Processing continues.

Operator Response: Save the system log for problem determination.

Programmer Response: No action is necessary if the absence of the indicated mode will not affect operations. Otherwise, check the system libraries for the presence of *modename*. If it is not there, you must include it. This message follows either message IST001I or IST013I, which identifies the module and system library to be checked.

IST127I *modename* **STILL ACTIVE — VTAM TERMINATION WAITING FOR** *text*

Explanation: VTAM cannot terminate because application program *modename* has not yet closed its ACB.

text is **JOB =** *jobname* **STEP =** *stepname*.

System Action: VTAM waits for **JOB =** *jobname* **STEP =** *stepname* to close its ACB.

Operator Response: Either wait for **JOB =** *jobname* **STEP =** *stepname* using *modename* to be completed, or cancel **JOB =** *jobname* **STEP =** *stepname* to allow VTAM to terminate.

Programmer Response: None.

IST128I HALT OF VTAM ALREADY IN PROGRESS

Explanation: The operator entered a HALT command, but a previously entered HALT command is in progress. The only valid duplication of HALT commands is HALT followed by HALT QUICK or HALT CANCEL.

System Action: VTAM rejects the command.

Operator Response: If you want to close down the VTAM network at once, enter a HALT QUICK or HALT CANCEL command. Otherwise, allow the normal HALT to continue.

Programmer Response: None.

IST129I UNRECOVERABLE OR FORCED ERROR ON NODE *nodename* **— VARY INACT SCHED**

Explanation: VTAM scheduled a VARY INACT command for the resource *nodename* because one of the following occurred:

Reason Description

1 An unrecoverable error occurred in a communication controller, physical unit, logical unit, link, or link station. Message IST259I precedes this message and provides additional information.

2 The operator issued a VARY INACT,TYPE=FORCE command.

3 If the maximum RU size was exceeded on the SSCP-LU session or the SSCP-PU session, VTAM scheduled an internal VARY INACT,TYPE=FORCE command.

System Action: VTAM automatically issues a VARY INACT command for the resource *nodename*.

Operator Response:

- For **Reason 1**, save the system log for problem determination. See the explanation of message IST259I for additional problem determination actions.
- For **Reason 3**, save the system log for problem determination. A buffer trace can provide additional information regarding the cause of the error.

Programmer Response:

- For **Reason 1**, use the system log and the explanation of message IST259I to assist you in correcting the problem. If you cannot determine the cause of the problem and need additional assistance, contact the IBM hardware support center.
- For **Reason 3**, use the system log and buffer trace, if provided, to assist you in correcting the problem.
  - Run your operating system service aid program to determine if MDR/OBR information has been recorded. See the *EREP User's Guide* for more information on using EREP. If you use a network management application such as NetView, check to see if an alert or an event was recorded for this problem.

    If you cannot determine the cause of the problem from the output provided or need additional assistance, contact the IBM hardware support center. If available, provide the MDR/OBR information from your operating system service aid program or the alert information recorded by your network management application.
  - If this message is the result of an apparent software error, take the following actions:
    - If you have access to IBMLink, search for known problems in this area. If no applicable matches are found, report the problem to IBM by using the Electronic Technical Report (ETR) option on IBMLink.
    - If you do not have access to IBMLink, report the problem to the IBM software support center.

IST130I VTAM SUBTASK *subtask* **INACTIVE — ABEND THRESHOLD EXCEEDED**

Explanation: VTAM issues this message when *subtask* abnormally terminated more than four times in the last 30 minutes. VTAM tried to reattach it by using the ETXR exit routine but could not because the abend threshold for the subtask was exceeded.

System Action: VTAM will make no further attempts to attach the subtask. VTAM continues without the support of the subtask.

subtask can be one of the following subtasks:

ISTATM00
VTAM termination subtask

ISTINCAV
ACTLINK/DACTLINK subtask

ISTINCDP
Dump/load/restart subtask

ISTINCTS
Tuning statistics subtask.

ISTINMLS
Directed load subtask

ISTCSCEX
Configuration services XID exit subtask

ISTCSCSD
SDDLU exit subtask

ISTPDCLU
LU subtask interface with session monitor or NLDM

ISTPUCX0
Virtual route selection subtask

Operator Response: Save the system log for problem determination. It may be necessary to halt VTAM and start it again if you need this subtask.

Programmer Response: Examine the output from the operator to determine the cause of the problem. See the *z/OS Communications Server: SNA Diagnosis Vol 1, Techniques and Procedures* for information on the abend procedure.

IST132I VTAM SUBTASK *subtask* **NOT REATTACHED — CANNOT BE FOUND**

Explanation: VTAM issues this message when *subtask* ended abnormally. *subtask* was not reattached because VTAM could not find it in the system library.

System Action: VTAM continues but without the support of the subtask.

subtask can be one of the following:

ISTATM00
VTAM termination subtask

ISTINCDP
Dump/load/restart subtask

ISTINCTS
Tuning statistics subtask.

ISTINMLS
Directed load subtask

ISTCSCEX
Configuration services XID exit subtask

ISTCSCSD
SDDLU exit subtask

ISTPDCLU
LU subtask interface with session monitor or NLDM

ISTPUCX0
Virtual route selection subtask

Operator Response: Save the system log for problem determination.

Programmer Response: Ensure that *subtask* is present in the system library and restart VTAM.

IST133I VTAM TERMINATION IN PROGRESS

Explanation: VTAM is terminating, either because of an unrecoverable error or because the operator issued a HALT command.

System Action: The reason for termination of VTAM can be one of the following:
- The operator entered the HALT command.
- The operator entered the HALT QUICK command.
- The operator entered the HALT CANCEL command.
- VTAM detected an unrecoverable error.

For detailed descriptions of the processing of the different HALT commands, see *z/OS Communications Server: SNA Operation*. If VTAM detected an unrecoverable error, the processing is similar to that which follows the HALT CANCEL command. See that description in the *z/OS Communications Server: SNA Operation*.

Operator Response: If this message is the result of a HALT command, no response is required. If it is caused by an abnormal termination, determine the cause of the termination from prior messages.

Programmer Response: None.

IST134I GROUP = *groupname***, MAJOR NODE =** *nodename*

Explanation: This message is part of a group of messages that VTAM issues in response to:
- A DISPLAY ID command for a line
- Failed activation of an ATM native connection network.

When the message is issued in response to a DISPLAY ID command, *groupname* is the symbolic name of the line group in which the line being displayed is defined.

nodename is the name of the major node in which the line group is defined.

When the message is issued in response to a failed ATM native connection network activation, it is part of a group of messages. The first message in the group is IST1166I. See the explanation of that message for a complete description.

IST135I PHYSICAL UNIT = *puname* [,CUA = *device_address*]

Explanation: This message is part of a group of messages that VTAM issues in response to a DISPLAY ID command for a logical unit.

puname is the name of the physical unit associated with the logical unit.

device_address is the hexadecimal device address of the physical unit and is issued only if the display is for a logical unit in a local SNA major node.

System Action: Processing continues.

Operator Response: None.

Programmer Response: None.

IST136I [{SWITCHED|LOCAL}] SNA MAJOR NODE = *majornode*

Explanation: This message is part of a group of messages that VTAM issues in response to a DISPLAY ID command.

- **SWITCHED** or **LOCAL** is the type of SNA major node in which the logical unit or physical unit exists (if it is defined in a local or remote SNA major node).
  - **SWITCHED** means that the node is accessed by dial lines.
  - **LOCAL** means that the node is channel-attached to the host processor.
- *majornode* is the name of the local or remote SNA major node.

System Action: Processing continues.

Operator Response: None.

Programmer Response: None.

IST137I CONFIG *configname* BYPASSED – LOCAL ADDRESS OF LU *luname* IS INVALID

Explanation: The local address (LOCADDR) value specified in the definition statement of configuration *configname* for logical unit *luname* is not valid. A local major node definition or switched definition containing dependent LUs requires all dependent LUs to have a unique valid value coded for LOCADDR.

System Action: Processing continues. VTAM does not include the configuration containing *luname* in the VTAM network.

Operator Response: Save the system log and print the major node or switched definition for problem determination.

Programmer Response: Correct the local address statements and file them in the definition library using the same name originally assigned to that local major node or switched definition. You need to deactivate and reactivate the major node or switched definition to use the new definition values.

See the *z/OS Communications Server: SNA Resource Definition Reference* for a description of VTAM definition statements.

IST142I CONFIG *configname* BYPASSED — PATH MACRO *macroname* ERROR, REASON CODE *code*

Explanation: While processing macro *macroname* during activation of a switched SNA major node, VTAM bypassed configuration *configname* because of an error shown by *code*, as follows:

Code	Meaning
1	The MAXDLUR, MAXNO, or MAXGRP value on the VBUILD definition statement is zero or is the default.
2	The MAXPATH value on the preceding physical unit definition statement is zero or is the default.
3	The number of paths specified exceeds the MAXPATH value of this physical unit.
4	The number of unique dial numbers and unique line names exceeds the MAXNO value specified on the VBUILD definition statement.
5	The number of unique group names exceeds the MAXGRP value specified on the VBUILD definition statement.

6 The number of unique dial numbers and unique line names exceeds the MAXNO value specified on the VBUILD definition statement.

7 The number of PATH definition statements that code DLCADDR for a single switched major node exceeds the maximum allowed.

System Action: Processing continues. VTAM does not add the configuration specified in the message to the VTAM network.

Operator Response: Save the system log for problem determination. Keep a record of the occurrences of this message.

Programmer Response: Correct the problem indicated by *code* in this message. After correcting the error, tell the operator to use the VARY command to activate the configuration again.

IST146I LINE NAME = *linename*, **STATUS =** *status*

Explanation: This message is part of a group of messages that VTAM issues in response to a DISPLAY TERMS command requesting the status of all LUs in a domain. The message gives the status of the line *linename* that provides attachment for subsequently listed LUs.

For *status* information, see the *z/OS Communications Server: IP and SNA Codes*.

System Action: Processing continues.

Operator Response: None.

Programmer Response: None.

IST148I DIAL OUT PATH INFORMATION FOR PHYSICAL UNIT *puname*

Explanation: This message is part of a group of messages that VTAM issues in response to a DISPLAY PATHS command for physical unit *puname*. The message gives the name of the physical unit for which the paths are being displayed. This physical unit is a minor node in a switched SNA major node and can use the displayed paths to communicate with an NCP.

System Action: Processing continues.

Operator Response: None.

Programmer Response: None.

IST149I LINE GRP TELEPHONE NUMBER OR LINE NAME PID GID CNT

Explanation: This message is the first in a group of messages that VTAM issues in response to a DISPLAY PATHS command. A complete description of the message group follows.

```
 IST149I  LINE GRP  TELEPHONE NUMBER OR LINE NAME  PID GID CNT
 IST168I  linegroup    {phonenum|linename|blanks.} pid gid cnt {AVA|NAV} {MAN|AUT|DIR}
[IST1575I DIALNO PID: pid[instance]]
[IST1318I parameter_value]
[IST1319I    parameter_value]
⋮
 IST314I  END
```

IST149I

This message is a header message for the information displayed in message IST168I.

IST168I

linegroup is the line group name for this path.

phonenum is a telephone number (for non-X.21 lines).

linename is a line name (for X.21 lines).

pid is the path identifier (PID).

gid is the group identifier (GID) for a group of paths across all physical units.

cnt is the number of times the dial operation is to be retried at the NCP.

AVA indicates that the path is available for use by VTAM.

NAV indicates that the path is not available for use by VTAM.

MAN indicates manual dial.

AUT indicates automatic dial for non-X.21 lines.

DIR indicates direct dial for X.21 lines.

IST1318I

parameter_value is the first 60 characters of the DIALNO value specified on the PATH definition statement, when the number of characters exceeds 32.

IST1319I

This message is used to display overflow information from *parameter_value* in IST1318I.

IST1575I

This message is issued when the DIALNO operand specified on the PATH definition statement exceeds 32 characters and cannot be displayed in message IST168I.

pid is the path identifier specified on the PATH definition statement.

instance indicates that *parameter_value* in messages IST1318I and IST1319I that follow correspond to the *instance* instance of the message IST168I with *pid* of **000**. You must count the group of IST168I messages to find the *instance* instance of message IST168I with a *pid* of **000**. *instance* is only displayed when *pid* is **000**.

System Action: Processing continues.

Operator Response: None.

Programmer Response: None.

IST150I RRT LOAD MODULE *rrtname* DOES NOT CONTAIN RESOURCE SEGMENT [EXTENSION]

Explanation: While processing definition statements, VTAM could not find the resource segment or resource segment extension within the resource resolution table (RRT) named *rrtname*. The RRT was produced during NCP generation. VTAM uses the resource segment (together with its entries) to correlate a minor node with its network address, and uses the resource segment extension to correlate the name of a physical unit type 4 with a transmission group number. Both the resource segment and resource segment extension are stored in the data set where the NCP load module is linked.

System Action: The activation of the NCP fails. Processing continues.

Operator Response: You can use the network only if the NCP is not essential. Save the system log for problem determination.

Programmer Response: Do one of the following:

1. If the NCP generation process did not complete successfully, check the output from the NCP generation to see whether the resource resolution table was produced. If it was, restart VTAM definition processing. If it was not, regenerate the NCP, restart VTAM definition processing.
2. If the resource resolution table has been damaged, take a dump of the RRT load module to see if it contains a resource segment or resource segment extension or both.

In either case, correct or reproduce the RRT load module by regenerating the NCP. Restart the VTAM definition processing.

IST153I PENDING DEACTIVATION OF *nodename* OVERRIDDEN

Explanation: A stronger deactivation request from another domain has overridden a VARY INACT command and placed *nodename* in deactivate-pending status. A VARY INACT,TYPE=FORCE command or VARY INACT,TYPE=IMMED command entered from another domain will override a VARY INACT command entered within the current domain.

System Action: The system processes the stronger command. The overridden command will probably be canceled.

Operator Response: None.

Programmer Response: None.

IST154I EXPANSION FAILED FOR *bp* BUFFER POOL — CODE *code* ,USERID= ***NA***

Explanation: The number of available buffers in VTAM buffer pool *bp* dropped to or fell below the expansion point value specified for that pool, and VTAM attempted to expand the pool. VTAM could not expand the pool for the reason indicated by *code*.

Note: This message is percolated. See "Message rerouting and percolation" on page 710 for additional information.

bp is the name of the buffer pool.

VTAM issues the following *code*s when a failure occurs during a deferred expansion.

Code	Description
4	Not enough CSA storage was available for the expansion.
5	Not enough fixed storage available for the expansion.
7	Storage is not available because VTAM's CSA limit has been exceeded.
8	Expansion would have caused the pool to exceed its *xpanlim* specification. See the *z/OS Communications Server: SNA Network Implementation Guide* for additional information about *xpanlim*.

VTAM issues the following *code*s when a failure occurs during an immediate expansion.

Code	Description
14	Not enough CSA storage was available for the expansion.
15	Not enough fixed storage available for the expansion.
17	Storage is not available because VTAM's CSA limit has been exceeded.
18	Expansion would have caused the pool to exceed its xpanlim specification. Refer to the *z/OS Communications Server: SNA Network Implementation Guide* for additional information about xpanlim.

System Action: VTAM did not expand the buffer pool this time. When VTAM contracts other buffer pools, it will try again to expand this pool. Performance may be adversely affected by this failure to obtain more buffers.

Operator Response: See the explanation of IST930I when that message is issued.

If VTAM continues to issue this message, enter the DISPLAY BFRUSE command. Save the system log and request a dump for problem determination.

Programmer Response: See the explanation of IST930I when that message is issued.

If APPL-APPL sessions are not paced at the session level, storage expansion failures can occur. If an APPL-APPL session is not paced at the session level, there is no limit to the number of VTAM I/O buffers that the session can use. See the section on common subarea network problems in the *z/OS Communications Server: SNA Diagnosis Vol 1, Techniques and Procedures* for more information about this problem.

Increase storage as required. For insufficient storage errors, you might want to redefine your buffer pool or CSA start options. If the start option cannot be modified using the MODIFY VTAMOPTS command, you must modify the VTAM start options file (ATCSTRxx) and restart VTAM to use the start option.

- See the *z/OS Communications Server: SNA Resource Definition Reference* for a description of VTAM start options.
- See the *z/OS Communications Server: SNA Operation* for information about the DISPLAY BFRUSE Command and the MODIFY VTAMOPTS Command.
- See the *z/OS Communications Server: SNA Network Implementation Guide* for an explanation and description of buffer pools and for general information on buffer pool specification and allocation.
- See the *z/OS Communications Server: SNA Diagnosis Vol 1, Techniques and Procedures* for additional information.

IST155I SUBTASK *subtask* **HAS ABENDED, CODE** *code*

Explanation: VTAM issues this message when *subtask* abnormally terminates.

code is the system abend code and indicates the reason for the abend. Check your operating system abend code manual for a description of code.

System Action: The system action is determined by the value of *subtask*:

ISTCPCRY
VTAM processing continues. This subtask is invoked to perform cryptographic management services.

ISTENQIO
VTAM terminates the disk I/O processing associated with a specific instance of the subtask. This subtask is invoked during initialization or by the MODIFY CHKPT command.

ISTINCXI
VTAM terminates the dump (static or dynamic). For a static dump, deactivation of the NCP continues. This subtask is invoked by the MODIFY DUMP command.

ISTINCXM
VTAM terminates the remote static dump, dynamic dump, or dump transfer. This subtask is invoked by the MODIFY DUMP command.

ISTINC05
Loading of the communication controller is terminated. The command fails. This subtask is invoked by conditional, unconditional, and nondisruptive loads of a 37XX communications controller.

ISTINCR6
The configuration might not be restored to checkpointed status (START command) or the major node checkpoint record might be lost (VARY command), but processing of the command continues. This subtask is invoked by a checkpoint on a major node.

ISTINCOQ
The module assumes a default reply. This subtask is invoked by an attempt by a VTAM module to write a message that requires an operator reply.

ISTINCY0
If an application program issued an open destination (OPNDST), the request fails. Verify that the physical path to the control unit is available. Make sure the unit is online and is operational. If the operator issued a VARY ACT or VARY INACT command, processing continues, but the connection or disconnection of the 3791 fails. This subtask is invoked by a dial abandon, a dial contact, a dial out, or a dial enable answer.

Operator Response: Save the system log for problem determination. Check your operating system abend code manual for a description of code.

Programmer Response: Use the output provided and the meaning of *code* to assist in determining the cause of the abend. Make sure that the failing job step includes a SYSABEND DD statement. When the error is corrected, ask the operator to retry the command.

See the *z/OS Communications Server: SNA Diagnosis Vol 1, Techniques and Procedures* for information on the abend procedure.

IST159I THE FOLLOWING NODES ARE IN A PENDING STATE

Explanation: VTAM issues this message in response to a DISPLAY PENDING command.

System Action: Processing continues.

Operator Response: None.

Programmer Response: None.

IST165I CDRM *cdrmname* **HAS AN INVALID ELEMENT VALUE — 1 IS ASSUMED**

Explanation: VTAM issues this message when a value other than 1 has been defined as the element address for CDRM *cdrmname*. Every VTAM cross-domain resource manager (CDRM) must have an element address of 1 in its own network.

System Action: VTAM gives the definition of *cdrmname* a network address with an element address of 1. All other hosts that processed this CDRM statement have the CDRM defined with an element value other than 1. Thus, other domains cannot communicate through *cdrmname* with this domain. This applies only to CDRMs in the same network.

Operator Response: Save the system log and print the CDRM definition for problem determination.

Programmer Response: The CDRM is now defined as a CDRM in this domain. If you want to change *cdrmname* to a non-VTAM domain, deactivate the major node in which *cdrmname* is defined and change the *cdrmname* definition in the definition library.

After changing the *cdrmname* definition, use an operating system utility program to delete a member of a partitioned data set. Then reactivate the major node in which *cdrmname* is defined.

Notes:

1. If *cdrmname* was meant to define this host's CDRM, then change the element address to 1 in the definition of *cdrmname*.
2. If *cdrmname* was meant to define another host's CDRM, then change the subarea address to something other than this VTAM's HOSTSA start option.

IST167I NO DIAL OUT PATH FOR *puname*

Explanation: This message is part of a group of messages that VTAM issues in response to a DISPLAY PATHS command for *puname*. No dial-out paths exist for physical unit *puname*.

System Action: Processing continues.

Operator Response: None.

Programmer Response: None.

IST168I *linegroup* **{***phonenum***|***linename***}** *pid gid cnt* **{AVA|NAV} {MAN |AUT|DIR}**

Explanation: VTAM issues this message as part of a message subgroup. The first message in the subgroup is either IST149I or IST1351I. See the explanation of either message for a complete description.

IST169I DISCONNECTION CAUSED VARY *action* **FOR PU =** *puname*

Explanation: One of the following conditions occurred:

- All LU-LU sessions have ended. If you specified DISCNT=YES on the PU statement for *puname*, *action* will be **INACT**.
- VTAM received an immediate or normal REQDISCONT request from the PU.
  - If the PU is local, action will be **REACT**.
  - If the PU is switched, action will be **INACT**.
  - If the PU is attached via a leased line, action depends on the CONTACT option in the request.
- VTAM disconnected the PU because the time specified on **DISCNT=(DELAY** has lapsed.
- The last LU-LU session has ended as a result of a **TERM-SELF RU**request or the end-user issued a **LOGOFF HOLD=NO** command.

System Action: Processing continues.

Operator Response: None.

Programmer Response: None.

IST170I LINES:

Explanation: This message is a header line that VTAM issues in response to a DISPLAY LINES command or a DISPLAY ID command for a subarea physical unit. Subsequent messages indicate the name and status of the lines associated with the subarea physical unit.

System Action: Processing continues.

Operator Response: None.

Programmer Response: None.

IST171I ACTIVE SESSIONS = *sessions*, **SESSION REQUESTS =** *requests*

Explanation: This message is part of a group of messages that VTAM issues in response to a DISPLAY ID command.

sessions is the number of active sessions, including XRF backup sessions.

requests is the number of pending or queued logon requests or both. *requests* does not apply to SSCP-SSCP sessions.

System Action: Processing continues.

Operator Response: None.

Programmer Response: None.

IST172I NO *text*

Explanation: VTAM issues this message in response to various DISPLAY commands. *text* can be any of the following:

ADJCLUST TABLE EXISTS
ADJCP FOUND
ADJCP MAJOR NODE EXISTS
ADJLISTS EXIST
ADJSSCP TABLE EXISTS
ADJSSCP TABLES EXIST
APPLICATIONS {ACTIVE|ACTONLY|ACTSESS|CONCT|EXIST| INACTIVE|INACTONLY|PENDING|RESET}
APPN COS ENTRIES EXIST
APPNTOSA TABLE EXISTS
BLOCKED VIRTUAL ROUTE
CDRMS {ACTIVE|ACTONLY|ACTSESS|CONCT|EXIST| INACTIVE|INACTONLY|PENDING|RESET}
CDRSCS {ACTIVE|ACTONLY|ACTSESS|CONCT|EXIST| INACTIVE|INACTONLY|PENDING|RESET}
CONNECTIONS ACTIVE
COSMAP TABLE EXISTS
DLUR NODES SERVED
HELD VIRTUAL ROUTE
LINES {ACTIVE|ACTONLY|ACTSESS|CONCT| EXIST|INACTIVE|INACTONLY|PENDING|RESET}
LOGICAL UNITS {ACTIVE|ACTONLY|ACTSESS|CONCT|EXIST| INACTIVE|INACTONLY|PENDING|RESET}
LUGROUP NODES EXIST
MAJOR NODES {ACTIVE|EXIST|INACTIVE}
MODELS EXIST
MODEL SEGMENTS EXIST
NETWORK NODES {ACTIVE|EXIST|INACTIVE}
RTPS FOUND
SAMAP TABLE EXISTS

SATOAPPN TABLE
SAW SENSE FILTER
SESSIONS {ACTIVE|EXIST|PENDING|QUEUED}
STRUCTURE CONNECTIONS EXIST
TRL EXISTS
TRLES EXIST
USERVARS EXIST
VIRTUAL ROUTES EXIST

System Action: Processing continues.

Operator Response: None.

Programmer Response: None.

IST176I *command* **FAILED —** *option1* **AND** *option2* **ARE CONFLICTING OPTIONS**

Explanation: The *command* failed because the options specified (*option1* and *option2*) are mutually exclusive and should not appear on the command simultaneously.

System Action: VTAM rejects the command. Other processing continues.

Operator Response: Reenter the *command* using only one of the options specified above and verifying that no other conflicting options appear. When VTAM completes processing of the *command*, reenter the command with the remaining option, if desired.

Programmer Response: None.

IST180I **OPEN FAILED ON CKPT DS** *datasetname* **MAJ NODE** *nodename* **RTNCD =** *major minor*

Explanation: The VSAM OPEN function failed for the specified checkpoint data set.

datasetname is the DDNAME for the checkpoint data set.

nodename is the major node name.

major is the register 15 return code from VSAM (hexadecimal).

minor is the ACBERFLG return code from VSAM (hexadecimal).

System Action: VTAM terminates checkpointing for this major node.

Operator Response: Save the system log for problem determination.

Programmer Response: See the appropriate VSAM documentation for the correct response to each return code.

IST181I **CLOSE FAILED ON CKPT DS** *datasetname* **MAJ NODE** *nodename* **RTNCD =** *major minor*

Explanation: The VSAM CLOSE function failed for the specified checkpoint data set.

datasetname is the DDNAME for the checkpoint data set.

nodename is the major node name.

major is the register 15 return code from VSAM (hexadecimal).

minor is the ACBERFLG return code from VSAM (hexadecimal).

System Action: VTAM terminates checkpointing for this major node.

Operator Response: Save the system log for problem determination.

Programmer Response: See the appropriate VSAM documentation for the correct response to each return code.

IST182I UNABLE TO GET STORAGE FOR CKPT *datasetname* **MAJOR NODE** *nodename*

Explanation: VTAM was unable to obtain VTAM private storage for checkpointing of the specified major node.

datasetname is the checkpoint data set DDNAME.

nodename is the major node name.

System Action: VTAM terminates checkpointing for this major node. If *nodename* is a major node named in a VARY ACT command (with the WARM operand), processing of the command terminates.

Operator Response: Enter the DISPLAY STORUSE command to display storage usage for storage pools. Message IST981I displays total VTAM private storage information. If this message does not appear in the display, you may need to reissue the DISPLAY STORUSE command, specifying a higher value for the NUM operand. See the *z/OS Communications Server: SNA Operation* for information about the DISPLAY STORUSE Command.

Save the system log and request a dump for problem determination.

Programmer Response: Increase storage as required.

- See the *z/OS Communications Server: SNA Operation* for additional information.
- See the *z/OS Communications Server: SNA Diagnosis Vol 2, FFST Dumps and the VIT* for information about analyzing dumps about about analyzing storage using the VIT analysis tool, if external trace is active.

IST183A *controller* **FOUND LOADED WITH** *ncpname* **— REPLY 'YES' TO REIPL OR 'NO' TO CONTINUE**

Explanation: During the restart of a configuration, VTAM found the specified *controller* to be loaded with NCP *ncpname*. You specified AUTOSYN=NO or VFYLM=YES on the PCCU macro in the NCP generation when you defined the NCP. The operator may therefore decide to reload the specified NCP or continue with it as it is.

System Action: Processing continues.

Operator Response: If you wish to reload the indicated NCP, reply YES. A reply of NO will continue to activate the NCP without reloading. Exercise caution with multiple-channel or multiple-link attached communication controllers. If you want to reload the NCP, only one of the hosts sharing the communication controller should reply YES. The others should wait until the load is completed before replying NO. This requires operator communication across domains.

Note: For additional information on how to respond to this message, see "Responding to a VTAM message" on page 2.

Programmer Response: None.

IST184I I/O ERROR ON CKPT DS *datasetname* **MAJOR NODE** *nodename* **RTNCD =** *major minor*

Explanation: An I/O error occurred for the specified checkpoint data set.

datasetname is the DDNAME for the checkpoint data set.

nodename is the major node name.

major is the RPLRTNCD hexadecimal return code from VSAM.

minor is the RPLERRCD hexadecimal return code from VSAM.

System Action: VTAM terminates checkpointing for this major node. If *nodename* is a major node name on a VARY ACT command (with the WARM operand), VTAM stops processing the command.

Operator Response: This is probably a hardware error. Save the system log for problem determination.

Programmer Response: See the applicable VSAM documentation for appropriate responses.

IST185I LOGICAL ERROR ON CHECKPOINT DS *datasetname* **MAJOR NODE** *nodename*

Explanation: An incompatibility exists between the checkpoint data set and the current VTAM configuration.

datasetname is the DDNAME for the checkpoint data set.

nodename is the major node name.

System Action: VTAM terminates checkpointing for this major node.

Operator Response: Save the system log for problem determination.

Programmer Response: Compare the contents of the data set against the current VTAM configuration to check for incompatibilities.

IST186I *command* **FOR ID =** *nodename* **CONTINUES COLD — CHECKPOINT DATA SET** *datasetname* **{EMPTY|ERROR}**

Explanation: The operator entered a VARY ACT *command* with the WARM operand to start VTAM. However, because the configuration restart data set (checkpoint data set) for the node *nodename* contained no records, VTAM activated the node to its initial (cold) status.

datasetname is the DDNAME for the checkpoint data set.

- An empty configuration restart data set indicates that the node has not been previously activated with checkpointing. You cannot perform a warm activation for a node that was not previously activated.
- If the message indicates an error, a previous message will give an explanation of the error.

NOT AVAILABLE
The checkpoint data set does not exist.

System Action: Processing continues.

Operator Response: None.

Programmer Response: None.

IST187I *command* **FOR ID =** *nodename* **FAILED — CHECKPOINT DATA SET** *reason*

Explanation: The operator entered a VARY ACT *command* with the WARM operand for the node *nodename* and VTAM rejected the command for one of the following *reason*s:

cpdsname **EMPTY**
Configuration-restart data set (checkpoint data set) *cpdsname* contained no records. (An empty configuration-restart data set generally indicates that the node has not been previously activated with checkpointing. You cannot reactivate a node to a warm status if the node was not previously activated.)

cpdsname **ERROR**
VTAM encountered an error while processing the configuration-restart data set (checkpoint data set) *cpdsname*. A previous message provides an explanation of the error.

NOT AVAILABLE
The checkpoint data set does not exist.

System Action: The command fails. Other processing continues.

Operator Response: To activate the node to initial (cold) status, reenter the VARY ACT command without the WARM operand.

Programmer Response: None.

IST191I *command* **SYNTAX ERROR**

Explanation: A syntax error occurred in the *command* that was entered by a program operator application.

System Action: VTAM rejects the command. Other processing continues.

Operator Response: Save the system log for problem determination.

Programmer Response: Correct the syntax of the *command* in the program operator application. See *z/OS Communications Server: SNA Operation* for the correct command syntax.

IST192I **POA MSG TRANSFER FAILED — INSUFFICIENT STORAGE**

Explanation: VTAM issues this message to the system console when the program operator interface could not allocate VTAM private storage for a VTAM message to be transferred to a program operator application.

System Action: Processing continues. If the VTAM message is a write-to-operator with reply (WTOR) or an

unsolicited VTAM message, VTAM will reroute the “failing” message to the system console. Other messages will be discarded.

Operator Response: Wait a short time and reenter the command. If PPOLOG=YES is in effect, messages being written to the primary program operator log could be causing VTAM private storage to be depleted. Issue a MODIFY PPOLOG=NO command to stop logging.

If VTAM continues to issue this message, enter the DISPLAY STORUSE command to display storage usage for storage pools. Message IST981I displays total VTAM private storage information. If this message does not appear in the display, you may need to reissue the DISPLAY STORUSE command, specifying a higher value for the NUM operand. See the *z/OS Communications Server: SNA Operation* for additional information. Save the system log and request a dump to determine current private storage usage.

Programmer Response:

- Review the amount of private storage allocated to VTAM. Verify that the size of the user region for VTAM is defined properly.
- You may want to cancel program operator applications that are using excessive private storage.
- If PPOLOG=YES was in effect, verify that all VTAM messages have been received by the primary program operator (PPO) by issuing RCVCMD macros.

Note: If PPOLOG=YES and the no-storage condition has cleared, the primary program operator application may also receive this message.

IST193I REPLY *id* IGNORED — REPLY TOO LONG FOR REQUESTOR

Explanation: A program operator application program entered a REPLY *id* command. The reply text was too long for the requirements of the requested reply.

Note: Only two digits will appear in the REPLY *id* even if more than two digits were entered.

System Action: VTAM rejects the REPLY *id* command and processing continues.

Operator Response: Save the system log for problem determination.

Programmer Response: Correct the program operator application.

IST194I REPLY *id* NOT OUTSTANDING

Explanation: A program operator application entered a REPLY *id* command. However, there is no outstanding reply request with the identification *id*. Either the message reply request was already answered or the message reply identification *id* is incorrect.

Note: Only two digits will appear in the REPLY *id* even if the program operator application entered more than two digits.

System Action: VTAM rejects the REPLY *id* command.

Operator Response: Save the system log for problem determination.

Programmer Response: Correct the program operator application.

IST195I REPLY *id* IGNORED — NON-DECIMAL ID

Explanation: A program operator application entered a REPLY *id* command specifying a nondecimal identification. The REPLY *id* command must be entered as decimal digits, with or without a leading zero, in identification 00–99.

Note: Only two digits will appear in the REPLY *id* even if the program operator application entered more than two digits.

System Action: VTAM rejects the REPLY *id* command. Processing continues.

Operator Response: Save the system log for problem determination.

Programmer Response: Correct the program operator application.

IST198I VTAM INTERNAL TRACE ACTIVATION FAILED — GTF NOT ACTIVE

Explanation: The operator entered a MODIFY or START command for the VTAM internal trace with a MODE=EXT operand. This operand specifies that the trace records be written to a general trace facility (GTF) data set. However, GTF is not active.

System Action: VTAM rejects the MODIFY or START command for the internal trace and does no tracing.

Operator Response: Activate the general trace facility. Then reenter the command to activate the VTAM internal trace.

Programmer Response: None.

IST199I OPTIONS = *optionlist*

Explanation: VTAM issues this message as part of several message groups. Possible message groups follow:

- If IST199I is preceded by IST315I, see the description of IST315I for more information.
- This message group is issued in response to one of the following commands:
  - MODIFY TRACE,TYPE=EXIT,ID=*exitname*,OPT=*optionlist*
  - MODIFY NOTRACE,TYPE=EXIT,ID=*exitname*,OPT=*optionlist*
  - DISPLAY TRACES,TYPE=EXIT,ID=*exitname*
  - DISPLAY TRACES,TYPE=ALL

  ```
  IST075I  NAME = exitname, TYPE = EXIT
  IST199I  OPTIONS = optionlist
  IST314I  END
  ```

  Note: ID is a required parameter for TYPE=EXIT, but only ISTEXCAA, ISTEXCCS, or ISTEXCDM is valid.
- This message group is issued in response to a DISPLAY TRACES,TYPE=STATE or a DISPLAY TRACES,TYPE=MODULE command.

  ```
  IST350I DISPLAY TYPE = type
  IST199I OPTIONS = optionlist
  IST314I END
  ```
- This message group is issued when MODULE or STATE tracing is initiated.

  ```
  IST1515I tracetype TRACE ACTIVE
  IST199I  OPTIONS = optionlist
  :
  IST314I  END
  ```
- This message group is issued in response to a DISPLAY EXIT,ID=*exitname* or DISPLAY EXIT,ID=*.

  ```
   IST350I DISPLAY TYPE = EXIT
   IST1250I NAME         LEVEL          MODULE      STATUS
   IST1251I exitname     exitlevel      module      status
  :
  [IST1315I DISPLAY TRUNCATED AT MAX = number]
  [IST199I   OPTIONS = {NONE|optionlist}]
  :
   IST1454I count  EXIT(S) DISPLAYED
   IST314I  END
  ```

IST075I

exitname is the resource being displayed. For this message group, *type* is always **EXIT**.

IST199I

If TYPE = EXIT on the DISPLAY TRACES, MODIFY TRACE, or MODIFY NOTRACE command, or if DISPLAY EXIT,ID=*exitname* or DISPLAY EXIT,ID=* is entered, *optionlist* can include the following options:

- **For ISTEXCAA:**
  ACCTING
  Initial and final accounting
  ADJSSCP
  Adjacent SSCP selection

ALIAS Alias translation
ALL All functions of the exit are traced
ALS Adjacent link station selection
BEGIN Begin function
END End function
GWPATH
Gateway path selection
INITAUTH
Initial authorization
REPL Exit replacement and replaced function
SECAUTH
Secondary authorization
VRSEL Virtual route selection
HPRVRSEL
HPR Virtual Routes Selection
HPRP_OLU
HPR OLU RTP node role authorization
HPRP_DLU
HPR DLU RTP node role authorization
HPRP_ANR
HPR ANR RTP node role authorization
XRF XRF session switch

- **For ISTEXCCS:**
  BEGIN Begin function
  CONNSTAT
  Connection Status
  DYN_XID
  XIDs for DYNAMIC PUs
  PRED_XID
  XIDs for PREDEFINED PUs
  END End function
- **For ISTEXCDM:**
  BEGIN Begin function
  INITAUTH
  Initial authorization
  BN_SEL
  Border Node Selection
  CDS_SEL
  Central Directory Server Selection
  ADS_SEL
  Alt. Central Directory Server Selection
  CRR_SEL
  Central Resource Registration Selection
  REPL Exit replacement and replaced function
  END End function

If TYPE = MODULE on the DISPLAY TRACES, MODIFY TRACE, or MODIFY NOTRACE command, or the TRACE,TYPE=MODULE start option was specified, *optionlist* can include the following options:
COMMAND(CMD)
Modules associated with command processing are being traced
CONNECTION(CON)
Modules associated with connection processing are being traced
DEFINITION(DEF)
Modules associated with definition processing are being traced
INTERFACES(INT)
Modules associated with interfaces processing are being traced
MANAGEMENT(MGMT)
Modules associated with management processing are being traced
NOEXIT
Module exit tracing has been started or stopped

NONE No modules are being traced
PURGE
Information in the module tracing buffers has been written to VTAM internal trace (VIT) entries
SESSION(SES)
Modules associated with session processing are being traced

If TYPE = STATE on the DISPLAY TRACES, MODIFY TRACE, or MODIFY NOTRACE command, or the TRACE,TYPE=STATE start option was specified, *optionlist* can include the following options:
ADJCP States of all adjacent control points are being traced
APPL States of all applications are being traced
CDRM States of all cross-domain resource managers are being traced
CDRSC
States of all cross-domain resources are being traced
GROUP
States of all groups are being traced
LINE States of all lines are being traced
LU States of all logical units are being traced
NCP States of all type 4 and type 5 nodes are being traced
NONE No resource types are being traced
PU States of all physical units are being traced

IST1315I

VTAM issues this message when the number of exits to be displayed exceeds the value specified on the MAX operand.

number is the value specified for the MAX operand.

IST1454I

This message gives the number of exits displayed.

IST1515I

tracetype will be **MODULE** or **STATE**.

System Action:

- If this message is in response to a DISPLAY TRACES command, other processing continues.
- If this message is in response to a MODIFY TRACE,TYPE=MODULE or a MODIFY TRACE,TYPE=STATE command, the trace begins for the options selected.
- If this message is in response to a MODIFY NOTRACE,TYPE=EXIT; MODIFY NOTRACE,TYPE=MODULE; or MODIFY NOTRACE,TYPE=STATE command, the trace stops for the options selected.

Operator Response: None.

Programmer Response: None.

Refer to *z/OS Communications Server: SNA Diagnosis Vol 1, Techniques and Procedures* for information on traces and to *z/OS Communications Server: SNA Operation* for information on the DISPLAY and MODIFY commands.

IST206I SESSIONS:

Explanation: This message is a header for the message IST634I group which is generated as the result of a DISPLAY ID command.

System Action: Processing continues.

Operator Response: None.

Programmer Response: None.

IST208I UNABLE TO TERMINATE SESSIONS FOR ID = *minornode* **— INSUFFICIENT STORAGE**

Explanation: VTAM could not terminate sessions for *minornode* because the system lacked the storage necessary to complete termination processing.

System Action: VTAM rejects the command.

Operator Response: Wait a short time and reenter the command. If VTAM continues to issue this message, enter the DISPLAY BFRUSE command. Save the system log and request a dump for problem determination.

Programmer Response: Verify that the operator entered the buffer pool or CSA start options as specified in the start procedures.

Increase storage as required. For insufficient storage errors, you might want to redefine your buffer pool or CSA start options. If the start option cannot be modified using the MODIFY VTAMOPTS command, you must modify the VTAM start options file (ATCSTRxx) and restart VTAM to use the start option.

- See the *z/OS Communications Server: SNA Resource Definition Reference* for a description of VTAM start options.
- See the *z/OS Communications Server: SNA Operation* for information about the DISPLAY BFRUSE Command and the MODIFY VTAMOPTS Command.

IST211I NCP SLOWDOWN INITIATED FOR *controller*

Explanation: The communication controller *controller* has entered system slowdown mode because the NCP SLODOWN buffer threshold has been reached. NCP reduces the number of PIUs it will accept from VTAM, and will stop accepting PIUs if buffer depletion continues and the CWALL limit is reached.

System Action: VTAM performs no direct VTAM action. The actual function of entering slowdown occurs at a channel interface level.

Operator Response: Save the system log for problem determination and obtain an NCP dump with the NCP dump utilities.

Programmer Response: Make the necessary changes to the NCP generation. See the *z/OS Communications Server: SNA Diagnosis Vol 2, FFST Dumps and the VIT* for more information about NCP dumps.

IST212I ACBNAME = *acbname*

Explanation: This message is part of a group of messages that VTAM issues in response to a DISPLAY ID command for an application program. The message appears only if the ACBNAME keyword *acbname* does not match the application program's APPL definition statement label.

System Action: Processing continues.

Operator Response: None.

Programmer Response: None.

IST213I ACBNAME FOR ID = *applname*

Explanation: The operator entered a DISPLAY ID command for an application program. The name of the application program's APPL definition statement is *applname*. The name specified in the DISPLAY ID command was the ACBNAME keyword used in the APPL statement.

System Action: Processing continues.

Operator Response: None.

Programmer Response: None.

IST214I NCP SLOWDOWN TERMINATED FOR *controller*

Explanation: Slowdown mode has ended in communication controller *controller* and the communication controller is now accepting outbound PIUs.

System Action: VTAM performs no direct action. Processing continues.

Operator Response: None.

Programmer Response: None.

IST219I I/O ERROR ON READ FOR *nodename* **– BYTECNT MISMATCH**

Explanation: VTAM issues this message when an input buffer error is detected during a READ operation for one of the following:
- Channel attached NCP *nodename*
- Channel attached local SNA control unit *nodename*.
- Channel attached multipath channel (MPC) line, where *nodename* is the name of the line.

The data count field for the PIU does not match the amount of data transferred (**BYTECNT**).

System Action: VTAM deactivates *nodename*.

If the node is attempting to send more data than VTAM can receive, the operating system may generate message IOS000I.

Operator Response: This is probably a hardware error. Save the system log for problem determination. Run your operating system service aid program to determine if MDR/OBR information has been recorded. See the *EREP User's Guide* for more information on using EREP.

If you use a network management application such as NetView®, check to see if an alert was recorded for this problem.

Programmer Response: If you cannot determine the cause of the problem from the output provided or need additional assistance, contact the IBM hardware support center.

If available, provide the MDR/OBR information from your operating system service aid program or the alert information recorded by your network management application.

IST221I *majornode* **:** *minornode* **IS INVALID,** *n***, UNSUPPORTED OPTION —** *option*

Explanation: VTAM attempted to activate a logical unit that requires cryptography in a system that does not support cryptography. Only MVS has a data encryption facility.

majornode is the name of a major node being activated by a VARY ACT command.

minornode is the name of a node within *majornode*.

n is either 1 or 2. This number indicates the method that specified cryptography for the logical unit:
- If *n* is 1, a checkpoint-restart data set specified cryptography.
- If *n* is 2, a definition statement specified cryptography.

option is the name of the unsupported option that caused the rejection of the VARY command for *minornode*. The option names are:

ENCR=REQD OR SEL
The data encryption facility is necessary for a node requiring these levels of encryption.

MAC=REQD AND DES
The data encryption facility is necessary for a node that has a message authentication code (MAC), which is required, and MACTYPE=DES. If the node did not explicitly code an encryption value, ENCR=SEL was used.

System Action: VTAM activates *majornode*, but not *minornode*.

Operator Response: If *minornode* is required for network operation, save the system log for problem determination.

Programmer Response: If *minornode* is required, remove the requirement for cryptography from the definition statements.

IST223I MODIFY [*type***] COMMAND COMPLETED**

Explanation: VTAM issues this message when the MODIFY command has successfully completed.

type, if displayed, indicates the type of MODIFY command. *type* is not displayed for the following commands:
- MODIFY CSALIMIT
- MODIFY INOPDUMP
- MODIFY IOPD

IST225I

- MODIFY MSGMOD
- MODIFY PPOLOG
- MODIFY SUPP

See *z/OS Communications Server: SNA Operation* for more information about MODIFY commands.

System Action: Processing continues.

Operator Response: None.

Programmer Response: None.

IST225I *command* **FOR ID =** *nodename* **FAILED —** *reason*

Explanation: VTAM issues this message when the *command* failed for *reason*.

reason indicates the cause of the failure and can be one of the following:

ALSNAME NOT VALID
A MODIFY TRACE,TYPE=GPT command was entered for *nodename*. The adjacent link station name (ALSNAME) that was either specified or used by default was not in a valid state when the command was entered. If ISTAPNPU was used by default because it was the only entry in the adjacent link station list, then this is the reason the command failed. ISTAPNPU is the name of the generic APPN® adjacent link station. A real adjacent link station name must be specified for the command to succeed.

ALSNAME PARAMETER OMITTED
A MODIFY TRACE,TYPE=GPT command was entered for *nodename*. No ALSNAME was specified, and a default ALSNAME could not be determined because of one of the following:

- The adjacent link station list for *nodename* contains no entries.
- The adjacent link station list for *nodename* contains two or more entries (other than ISTAPNPU).

CALL SECURITY ERROR
VTAM detected a mismatch of the encrypted security data fields during the XID exchange. This mismatch may be caused by:

- An unauthorized subarea dial physical unit attempting to establish a connection over a switched line
- The absence of the PRTCT operand
- Not having the correct password coded for both the caller and receiver
- One of the subarea nodes that is of a level that does not support call security verification

CURRENT LEVEL HIGHER
The operator entered a MODIFY ENCR command or MODIFY SECURITY command for *nodename* to lower (make less secure) the level of cryptographic session for the logical unit or application program indicated by *nodename*. The level of cryptographic session for a logical unit or application program can only be raised (made more secure). For example, if you have defined an LU as *selective*, you cannot modify it to *optional*. You can modify it to *required*.

DYNAMIC CDRSC NOT VALID
nodename is a dynamic cross-domain resource; this is not valid for the TRACE command you entered.

EXIT IS NOT FOUND
The operator entered a DISPLAY EXIT command for a VTAM installation-wide exit which could not be located.

FUNCTION NOT OPERATIONAL
The Cryptographic Facility is not available to process a MODIFY ENCR command.

FUNCTION NOT SUPPORTED
A MODIFY ENCR command was entered for nodename and the cryptographic facility is not supported by this host.

INSUFFICIENT STORAGE
The operator entered a MODIFY ENCR command for *nodename* and the VTAM address space has insufficient storage.

INVALID MODEL LU
The operator entered a DISPLAY LUGROUPS command for *nodename*. Model LU *nodename* was not found in the LUGROUP specified on the GROUP operand of the DISPLAY LUGROUPS command.

INVALID STATE FOR CDRSC
Giveback processing or internal delete for node *nodename* failed. VTAM found a predefined CDRSC to be **not** active, and VTAM was not able to transfer the active sessions from the LU to the CDRSC.

ISTLSXCF NOT ACTIVE
Another node in the sysplex attempts to establish a connection with an XCF node, but the connection is not established because the dynamic local SNA major node, ISTLSXCF, is not in an active state.

ISTLSXCF NOT FOUND
Another node in the sysplex attempts to establish a connection with an XCF node, but the connection is not established because the dynamic local SNA major node, ISTLSXCF, does not exist.

ISTTRL NOT FOUND
Another node in the sysplex attempts to establish a connection with an XCF node, but the connection is not established because the TRL major node, ISTTRL, does not exist.

MACLNTH NOT VALID
The operator entered a MODIFY SECURITY command with a MACLNTH value that is not valid. The MACLNTH value is dependent on the most recent specification of MACTYPE. The MACTYPE value might have been specified on a MODIFY SECURITY command or on the APPL definition statement.

MACTYPE NOT VALID
The operator entered a MODIFY SECURITY command with a MACTYPE value that is not valid with the most recent specification of MACLNTH. The MACLNTH value might have been specified on a previous MODIFY SECURITY command or on the APPL definition statement.

MODULE LOAD FAILED
Attempt to load XCF modules fails.

NODE HAS NO KEY
The operator entered a MODIFY ENCR command or a MODIFY SECURITY command for *nodename*, and the node *nodename* does not have a properly defined cryptographic key in the cryptographic key data set.

NO SUITABLE RESOURCES FOUND
The operator entered a VARY ACQ or a VARY REL command, but it had no effect on the NCP.

Either all the resources were acquired or released already, or the OWNER specified on the command did not match any of the owner names specified on the NCP resources. Two different networks cannot share the same native resources.

NOT AN APPLICATION PROGRAM
The operator entered a MODIFY ENCR command or MODIFY SECURITY command for *nodename* for one of the following purposes:

- To set the encryption level to CONDITIONAL
- To set the values of MACLNTH or MACTYPE

MACLNTH, MACTYPE, and the CONDITIONAL encryption level are valid only if *nodename* is an application program.

REJECTED BY INSTALLATION EXIT
The operator entered a MODIFY ENCR command for *nodename*, and VTAM rejected the MODIFY ENCR command because of user-written routines related to the GENKEY function.

RESOURCE NOT VALID
The operator entered a MODIFY SECURITY command with the CKEY operand for *nodename*, but *nodename* is not a device type LU.

RTP PU NOT VALID
A VARY ACT command for an RTP PU is issued. This is a dynamic PU and activates automatically if RTP is supported. A VARY ACT of a RTP PU is invalid.

SECURITY MANAGER ERROR
A security error occurred while VTAM was processing the command *command*.

SECURITY MANAGER NOT AVAILABLE
The security manager is not available or the resource class APPCLU is not active.

SUBORDINATE NODE PENDING INACT
VTAM rejected a VARY INACT, TYPE=GIVEBACK or VARY REL, TYPE=GIVEBACK command because a logical unit subordinate to *nodename* has LU-LU sessions and is pending deactivation.

SYSPLEX JOIN FAILED
VTAM is attempting to join the sysplex, but a nonzero return code is sent from MVS.

SYSPLEX UNAVAILABLE
VTAM is attempting to join the sysplex, but the sysplex is not active.

UNABLE TO ALLOCATE CDRSC
Giveback processing or internal delete for node *nodename* failed. VTAM has insufficient resources to allocate a cross-domain resource or does not support a dynamic CDRSC and was not able to transfer the active sessions from the LU to a CDRSC.

VTAM ERROR
One of the following occurred:

- VTAM abended while processing a MODIFY PROFILES command.
- VTAM abended while processing a MODIFY ENCR command for *nodename*. The error may be due to the improper cleanup of the cryptographic facility (that is, the operator cancelled the cryptographic facility via the CANCEL command).

XCF BUILD FAILED
A VARY ACT command fails for a dynamic local SNA major node.

XCF PU NOT FOUND
A D TRL,XCFCP=*cp_name* command was issued for *nodename*. The nodename is the CP name specified in the display command. The associated dynamic PU for that CP was not located.

XCF TRLE NOT FOUND
One of the following occurred:

- A D TRL,XCFCP=*cpname* command was issued for *nodename*. The nodename is the CP name specified in the display command. The associated dynamic TRLE for that CP was not located.
- A V ACT,ID=ISTLSXCF command was issued. An XCF connection is in the process of being deactivated and an activation request is received. The dynamic TRLE which is required for activation does not exist.

System Action: The command is not completed. Processing continues.

CALL SECURITY ERROR
VTAM terminates the switched connection and deactivates the PU.

DYNAMIC CDRSC NOT VALID or UNABLE TO ALLOCATE CDRSC
LU *nodename* remains known to VTAM in an inactive state with active sessions.

FUNCTION NOT OPERATIONAL
The command is not executed.

FUNCTION NOT SUPPORTED
Install Cryptographic Facility.

SECURITY MANAGER ERROR or SECURITY MANAGER NOT AVAILABLE
VTAM does not refresh the profiles and continues to use the profiles that are in storage.

Operator Response: The *reason* determines the response:

ALSNAME NOT VALID
Enter a DISPLAY ID command for *nodename* to determine the correct adjacent link station and reenter the command.

The state (active or inactive) of the PU with which the independent LU is associated must be as follows:

- Active if it has been dynamically reconfigured within the NCP
- Active if it is on an NCP switched line
- Active or inactive if it is on an NCP nonswitched line

ALSNAME PARAMETER OMITTED
Enter a DISPLAY ID command for *nodename* to determine the correct adjacent link station, and reenter the command.

CALL SECURITY ERROR
Monitor the console for further occurrences of this message. If VTAM continues to issue this message, use the VARY ANS command to take the line out of answer mode.

DYNAMIC CDRSC NOT VALID or UNABLE TO ALLOCATE CDRSC
Activate a CDRSC major node that defines a CDRSC with *nodename*.

FUNCTION NOT OPERATIONAL
Make sure the Cryptographic Facility is installed and operational.

INSUFFICIENT STORAGE
If VTAM continues to issue this message, enter the DISPLAY BFRUSE command. Enter the DISPLAY STORUSE command to display storage usage for storage pools. Save the system log and request a dump for problem determination.

ISTLSXCF NOT ACTIVE
Enter a VARY,ACT,ID=ISTLSXCF to activate ISTLSXCF.

MACLNTH NOT VALID
Retry the command with a valid value for MACLNTH.

MACTYPE NOT VALID
Retry the command with a valid value for MACTYPE.

MODEL LU NOT VALID
Check that *nodename* is correct and retry the command. If problems persist, save the system log for problem determination.

NO SUITABLE RESOURCES FOUND
Verify that all of the NCP resources have been acquired or released or that the OWNER specified on the command matches the owner name specified on the resource(s) to be acted upon.

RESOURCE NOT VALID
Check that *nodename* is correct and retry the command. If problems persist, save the system log for problem determination.

SECURITY MANAGER ERROR
Retry the command. If VTAM continues to issue this message, contact the security administrator.

SUBORDINATE NODE PENDING INACT
Wait until all subordinate nodes have completed deactivation and retry the command.

VTAM ERROR
Save the system log and dump for problem determination. If the error was due to the improper cleanup of the cryptographic facility, enter the STOP command to stop the cryptographic facility, and save the system log for problem determination.

XCF PU NOT FOUND
Check the CP name specified on the parameter XCFCP to ensure it is correct and retry the command. Issue a DISPLAY TRL,CONTROL=XCF to determine if any XCF TRLEs exist. Issue a DISPLAY ID=ISTLSXCF to determine if an associated dynamic PU exists for the connection.

XCF TRLE NOT FOUND
Check the CP name specified on the parameter XCFCP to ensure it is correct and retry the command. Issue a DISPLAY TRL,CONTROL=XCF to determine if any XCF TRLEs exist.

All other *reason*s
Save the system log for problem determination.

Programmer Response: The *reason* determines the response:

CALL SECURITY ERROR
Verify that all nodes involved in the dial process are at a level that supports call security verification. The passwords used to verify the identity of the caller and the receiver must match. Refer to the PRTCT keyword on the PU statement in the switched major node definition.

CURRENT LEVEL HIGHER
If you wish to lower the cryptographic session level of a node, you must redefine the system definition cryptographic option in SYS1.VTAMLST and reactivate the major node that contains *nodename*.

IST225I

DYNAMIC CDRSC NOT VALID
Reenter the TRACE command with a resource that is not a dynamic cross-domain resource. You cannot trace a dynamic cross-domain resource.

EXIT IS NOT FOUND
Make sure the VTAM installation-wide exit that could not be found has been installed on your system.

INSUFFICIENT STORAGE
If this error occurs often, review the VTAM storage allocation. Increase storage as required.

- Use the *z/OS Communications Server: SNA Migration* to determine the storage requirements for VTAM.
- See the *z/OS Communications Server: SNA Resource Definition Reference* for a description of VTAM start options.
- See the *z/OS Communications Server: SNA Operation* for information about the DISPLAY BFRUSE Command, the DISPLAY STORUSE Command, and the MODIFY VTAMOPTS Command.
- See the *z/OS Communications Server: SNA Network Implementation Guide* for an explanation and description of buffer pools and for general information on buffer pool specification and allocation.
- See the *z/OS Communications Server: SNA Diagnosis Vol 2, FFST Dumps and the VIT* for information about analyzing dumps and about analyzing storage using the VIT analysis tool, if external trace is active.

INVALID MODEL LU
Check the definition of *nodename* to ensure that it is correct.

NODE HAS NO KEY
Define the cryptographic key for node *nodename* in the cryptographic key data set. For information about defining cryptographic keys, see the *z/OS ICSF System Programmer's Guide* and the *z/OS Communications Server: SNA Network Implementation Guide*.

NOT AN APPLICATION PROGRAM
Make sure *nodename* is the correct node name. If *nodename* is the correct name, see *z/OS Communications Server: SNA Operation* for more information on valid encryption levels. Otherwise, reenter the MODIFY ENCR command with the correct value for *nodename*.

REJECTED BY INSTALLATION EXIT
GENKEY failed with RETURN CODE 16 from the common cryptographic architecture product (CCA) or the IBM Cryptographic Unit Support product (CUSP).

For further information, see the documentation for the cryptographic facility that you are using.

SYSPLEX JOIN FAILED
Trace the return code from MVS. Verify that the sysplex environment exists and restart VTAM.

UNABLE TO ALLOCATE CDRSC
Take VTAM down and restart it so that it supports dynamic CDRSCs.

VTAM ERROR
See the *z/OS Communications Server: SNA Diagnosis Vol 1, Techniques and Procedures* for information on the abend procedure. If you cannot determine the cause of the problem from the output provided or need additional assistance, contact the IBM software support center.

If the error was due to the improper cleanup of the cryptographic facility, start the cryptographic facility if it is not already started.

XCF BUILD FAILED
Restart VTAM with full XCF support.

XCF PU NOT FOUND
Verify that XCF support is active for this VTAM.

XCF TRLE NOT FOUND
Verify that XCF support is active for this VTAM.

For all other *reason*s, no further action is recommended.

IST226I *command* **FOR ID =** *nodename* **NOT EFFECTIVE DURING CURRENT OR QUEUED SESSIONS**

Explanation: The operator entered the MODIFY ENCR *command* and changed the cryptographic session level of *nodename*. However, node *nodename* is in session or has queued sessions. The change will not affect the current or queued sessions, but will affect future sessions for *nodename*.

nodename is the name of the node specified on the command.

System Action: VTAM retains the new cryptographic session level specified in the MODIFY ENCR command and uses it when processing subsequent session-establishment requests.

Operator Response: None.

Programmer Response: None.

IST228I **ENCRYPTION =** *encryption_level* **, TYPE =** *min_type*

Explanation: This message is the first in a group of messages that VTAM issues in response to a DISPLAY ID, DISPLAY LUGROUPS, or a DISPLAY MODELS command for an application or a logical unit. This message indicates the level of cryptography supported by the node in question. A full description of the message group follows.

```
IST228I  ENCRYPTION = encryption_level , TYPE = min_type
IST1563I CKEYNAME = ckeyname CKEY = ckey_value CERTIFY = certify_value
IST1552I  MAC = mac_level MACTYPE = mac_type
IST314I  End
```

IST228I

- *encryption_level* describes the levels of cryptography and can be one of the following:

  REQUIRED
  Indicates that VTAM must encrypt all messages that this application program sends and decrypt all messages that the application program receives.

  CONDITIONAL
  If the session partner supports cryptography, VTAM must encrypt all messages that this application program sends and must decrypt all messages that the application program receives.

  If the session partner does not support cryptography, VTAM will set up a session without encryption.

  SELECTIVE
  Indicates that this application program can choose which messages are encrypted by VTAM.

  OPTIONAL
  Indicates that the application program has no special cryptographic requirements; its cryptographic capability is the same as the host processor's capability.

  NONE
  Indicates that the application program has no special cryptographic requirements; its cryptographic capability is the same as the host processor's capability.

- *min_type* describes the minimum type of cryptography and can be one of the following:

  DES
  Indicates that VTAM must use a minimum of DES encryption using an 8-byte key, if the session uses encryption.

  TDES24
  Indicates that VTAM must use a minimum of Triple-DES encryption using a 24-byte key, if the session uses encryption.

See the *z/OS Communications Server: SNA Network Implementation Guide* for information about cryptography.

IST1552I

mac_level describes the message authentication code (MAC) levels and can be one of the following:

REQUIRED
Indicates that VTAM must use message authentication codes for all messages this application program sends and verify all messages the application program receives.

CONDITIONAL
Indicates that if the session partner supports message authentication codes, VTAM must use message authentication codes for all messages this application program sends and must verify all messages the application program receives. If the session partner does not support message authentication codes, VTAM will set up a session without them.

NONE
Indicates that the application program will not use message authentication codes.

mac_type describes the method used to generate the MAC and can be one of the following:

CRC
Indicates that VTAM will use a cyclic redundancy checking (CRC) algorithm to perform message authentication code functions.

DES
Indicates that VTAM will use the data encryption standard (DES) to perform message authentication code functions. If a session partner is using CRC, that method is used during the session.

TDES
Indicates that for sessions utilizing Triple DES, Triple DES encryption (not DES encryption) will be used even if the operand value is DES.

NONE
Indicates that VTAM does not perform message authentication code functions. This value is displayed only when MAC=NONE.

IST1563I

ckeyname indicates the cryptographic key name of a key-encryption-key (KEK) in the cryptographic key data set (CKDS) for the defined resource, and is used to encrypt session keys. It is always the resource name for applications and cross-domain resources.

ckey_value can be one of the following:

PRIMARY
Indicates that cryptographic session keys are generated using the primary cryptographic key name (the name on the LU definition statement, or the value of the CKEYNAME operand). CKEY is always set to PRIMARY for applications and cross-domain resources.

ALTERNATE
Indicates that cryptographic session keys are generated using the alternate cryptographic key name with the suffix **.ALT**.

certify_value can be one of the following:

YES
Indicates that cryptographic sessions are authenticated at both the SLU and the PLU, if the session uses encryption.

NO
Indicates that cryptographic sessions are authenticated only at the SLU, if the session uses encryption.

System Action: Processing continues.

Operator Response: None.

Programmer Response: None.

IST231I *nodetype* **MAJOR NODE =** *majornode*

Explanation: VTAM issues this message in response to a DISPLAY command for a major node.

nodetype lists the type of the major node. See Chapter 15, “Node and ID types in VTAM messages” on page 697 for a description of *nodetype*.

For a DISPLAY command for LINES, STATIONS, or TERMS, *majornode* is the major node that contains the resources listed in subsequent messages.

For a DISPLAY ID command that has a group name specified, *majornode* is the major node that contains the group definition.

System Action: Processing continues.

Operator Response: None.

Programmer Response: None.

IST232I *linename*, *status*[, **CUA =** *device address*] [, **CONTROL = MPC**]

Explanation: VTAM issues this message in response to a DISPLAY command for a communication adapter, a LAN major node, or a multipath channel (MPC) attached resource.

linename is the name of a leased line defined for a type 5 physical unit, a switched line defined for a type 2 physical unit, or a VCNS line.

status is the condition or state of the channel-to-channel adapter or the token-ring subsystem. See the *z/OS Communications Server: IP and SNA Codes* for a description of *status*.

device address is the hexadecimal device address of *linename*. *device address* is only displayed for a communication adapter.

CONTROL = MPC is displayed if the resource is multipath channel (MPC) attached.

System Action: Processing continues.

Operator Response: None.

Programmer Response: None.

IST234I **I/O ERROR** *terminalname*, *command*, *ncpresponse*[, *bscstatus*]

Explanation: VTAM issues this message when an I/O error occurred on a BSC 3270 terminal or control unit.

terminalname is the name of a terminal or control unit.

command is the basic transmission unit (BTU) command and modifier. It represents the command that the NCP received when the I/O error occurred. For more information, see *NCP and EP Reference Summary and Data Areas* for the 3725 and 3745.

ncpresponse is the system or extended response that the NCP sends upon receiving the command. For more information, see *NCP and EP Reference Summary and Data Areas* for the 3725 and 3745.

bscstatus is the BSC status information. For more information, see the *3174 Functional Description*

System Action:

- For an I/O error on a BSC 3270 terminal, VTAM sends an error indication to the application program.
- For an I/O error on a BSC 3270 control unit, depending on NCP response and the number of failures, VTAM may resume polling for the data from the control unit.

Operator Response: This is probably a hardware error. If the problem persists, save the system log for problem determination.

Programmer Response: Use the output provided to assist you in determining the cause of the problem.

IST238I *runame* **{REQ|RES} FOR ID =** *nodename* **RCVD** *text*

Explanation: VTAM has received a request (REQ) or response (RES) unit *runame* for *nodename*. For a description of *runame*, see Chapter 14, “Command and RU types in VTAM messages” on page 685.

text provides additional information about *runame* and VTAM actions. Possible values of *text* include the following:

RECOVERY IN PROGRESS
VTAM is recovering *nodename*. See the subsequent message for the results of the recovery attempt.

ACTIVATION IS RESTARTED
VTAM is restarting the activation of *nodename*. Previous activation messages no longer require operator action and may be repeated by this reactivation.

IST240A

RU DATA-TYPE= *type*, **CAUSE =** *cause*

For an AM GUNBIND (DACTPU) request, *type* and *cause* values are included in this message. See *SNA Formats* for a definition of DACTPU.

Following are the RU DATA-TYPE fields and the RU DATA-CAUSE fields (expressed in hexadecimal):

type	**Meaning**
01	Final use, physical connection may be broken.
02	Not final use, physical connection should not be broken.
03	Session outage notification (SON).

cause	**Meaning**
07	VR-INOP: The virtual route carrying the SSCP-PU session has become inoperative forcing deactivation of the SSCP-PU session.
08	REX-INOP: The route extension serving the SSCP-PU session has become inoperative forcing deactivation of the SSCP-PU session.
09	HIERARCHICAL RESET: VTAM is deactivating the identified session because of a positive response to ACTPU.
0B	DACTVR: VTAM deactivated the identified SSCP-PU session because of a forced deactivation of the virtual route that the session was using.
0C	FAIL: VTAM reset the identified session because the SSCP-PU session ended.
0E	FAIL: RECOVERABLE. VTAM reset the identified session because the SSCP-PU session ended.
0F	CLEANUP: The SSCP is resetting its half-session before receiving the response from the PU that is being deactivated.
10	ALS RESET: VTAM should reset the peripheral adjacent link station (ALS) owned by the sending SSCP.
11	GIVEBACK: The sending SSCP relinquishes ownership of owned resources.

System Action: The system continues recovery or activation of *nodename*.

Operator Response: Wait for additional messages indicating the success or failure of the recovery or activation.

Programmer Response: None.

IST240A WAIT STATE IN VTAM DUE TO INSUFFICIENT NUMBER OF I/O BUFFERS SPECIFIED BY USER

Explanation: A VTAM process needs more I/O buffers than were allocated to the I/O buffer pool. This condition can occur if the number of buffers in the I/O buffer pool is less than the MAXBFRU value specified during NCP generation or is less than the number of buffers needed for a local 3270.

System Action: The VTAM process that requested I/O buffers enters a wait state. Other VTAM processing may continue.

Operator Response: ***If VTAM has been initialized***, wait a short time and reenter the command. If VTAM continues to issue this message, enter the DISPLAY BFRUSE command. Save the system log and request a dump for problem determination. ***If VTAM has not been initialized***, save the system log for problem determination.

Programmer Response: Since this is a VTAM definition error on the start option, specify a greater number of I/O buffers when you restart VTAM. Use the *z/OS Communications Server: SNA Network Implementation Guide* to determine the I/O buffer requirements for all devices connected by VTAM. Adjust this requirement as needed.

See the *z/OS Communications Server: SNA Network Implementation Guide* for an explanation and description of buffer pools and for general information on buffer pool specification and allocation. See the *z/OS Communications Server: SNA Diagnosis Vol 1, Techniques and Procedures* for an overview of the wait procedure.

IST241I *command* **COMMAND COMPLETE FOR** *nodename*

Explanation: VTAM issues this message when the *command* for *nodename* has been processed.

See Chapter 14, “Command and RU types in VTAM messages” on page 685 for a description of *command*.

System Action: Processing continues.

Operator Response: None.

Programmer Response: None.

IST242I *command* **COMMAND FAILED FOR ID =** *nodename* **SENSE =** *code*

Explanation: VTAM issues this message when the *command* for *nodename* failed for the reason indicated by *code*.

Note: If you are attempting a DISPLAY DISK command or a DISPLAY NCPSTOR command, and the command fails (most likely with a sense code of X'1005xxxx'), verify that the command is supported by the release of NCP you are using.

See Chapter 14, “Command and RU types in VTAM messages” on page 685 for a description of *command*.

See the *z/OS Communications Server: IP and SNA Codes* for a description of *code*.

System Action: VTAM rejects the command. Other processing continues.

Operator Response: Ensure that you entered *command* correctly. If problems persist, use *code* to help you determine the cause of the error.

Programmer Response: None.

IST243I **FRAMES SENT =** *sent*, **RCVD =** *received*, **RCVD WITHOUT ERRORS =** *noerrors*

Explanation: VTAM issues this message as part of a group of messages. The first message is IST549I. See the explanation of that message for a full description.

IST244I **NCP** *type* **STORAGE FOR ID =** *ncpname*

Explanation: This message is the first in a group of messages that VTAM issues in response to a DISPLAY NCPSTOR command.

```
IST244I  NCP type STORAGE FOR ID = ncpname
IST245I  address   xxxxxxxx xxxxxxxx xxxxxxxx xxxxxxxx
:
IST314I  END
```

type is one of the following depending on the value specified in the STORAGE operand:

type **STORAGE**
MAIN MAIN
DUMP VECTOR
DUMPVEC
DUMP MAIN
DUMPMAIN

ncpname identifies the address *address* of the NCP whose storage is displayed by one or more IST245I messages. *xxxxxxxx* is one word of storage in hexadecimal. Each occurrence of IST245I contains 4 words of storage.

System Action: Processing continues.

Operator Response: None.

Programmer Response: None.

IST245I *address xxxxxxxx xxxxxxxx xxxxxxxx xxxxxxxx*

Explanation: This message is part of a group of messages that VTAM issues in response to a DISPLAY NCPSTOR command. The first message in the group is IST244I. See the explanation of that message for a full description.

IST246I *function_code return_code*

Explanation: This message is seen at the console only when the Program Operator Application (POA) is not active.

System Action: Processing continues.

Operator Response: None.

Programmer Response: None.

IST247I **LOAD/DUMP PROCEDURE STATUS =** *status* **[, RU COUNT =** *rucount***]**

Explanation: VTAM issues this message in response to a DISPLAY ID command for an NCP (PU type 4).

status is the load or dump procedure state for the PU type 4 being displayed. The finite state machine values describe whether the procedure is load or dump and the current status of that procedure. See the *z/OS Communications Server: IP and SNA Codes* for a description of *status*.

If *status* is **RESET**, the load or dump procedure is not in progress at the time of the display.

rucount indicates the number of IPLTEXT (**PLOAD**) or DUMPTEXT (**PFDMP**) request units that have been sent to the controller. This field can be used to monitor the progress of a dump or load of a remote NCP. VTAM displays **RU COUNT =***rucount* only when *status* is **PLOAD** or **PFDMP**.

System Action: Processing continues.

Operator Response: None.

Programmer Response: None.

IST257I **VTAM SDUMP FAILED WITH RETURN CODE** *code* **REASON X'***reason***'**

Explanation: VTAM started an SVC dump (**SDUMP**) for an abend, or for a first-failure-data-capture (FFDC) detected error, and the system could not complete the dump successfully.

code indicates the return code received from MVS SDUMP and may be one of the following:

4 The system obtained only a partial dump. The dump data set or file may be too small. When *code* is 4, *reason* will be X'00'.

8 The system was unable to schedule a dump. When a return code of 8 is received, a hexadecimal reason code (*reason*) is returned.

reason indicates the cause of the SDUMP failure.

System Action: VTAM takes no further action to obtain a dump. Other processing continues.

Operator Response: Save the system log for problem determination.

Programmer Response: If *code* is **4**, look for system message IEA911I for further information. Message IEA911I includes reason codes that explain why the system could not execute a complete dump. Message IEA911I is documented in the *z/OS MVS System Messages, Vol 6 (GOS-IEA)*.

If *code* is **8**, refer to the specific *reason* code to determine the required action. For an explanation of the SDUMP *reason* codes, see one of the following books:

- *MVS/ESA System Programming Library: Application Development MACRO Reference* in the section on SDUMP and SDUMPX macros.
- *MVS/ESA Application Development MACRO Reference* in the section on SDUMP and SDUMPX macros.
- *MVS/ESA System Programming Library: Application Development Guide* in the SVC Dump Return and Reason Codes section.
- *MVS/ESA Application Development Reference* Services for Authorized Assembler Language Programmers LLACOPY through SDUMPX Volume 3 in the SDUMP Return and Reason Codes section.

IST258I STMT IN ERROR = *text*

Explanation: VTAM issues this message as part of a group of messages. The first message in the group is IST1249I. See the explanation of that message for a complete description.

IST259I INOP RECEIVED FOR *nodename* **CODE =** *code* **[***text***]**

Explanation: VTAM received an INOPERATIVE RU for *nodename*. The *code* field gives the INOP reason code.

Note: If the resource that is going INOP is attached remotely off an NCP, then the NCP, not VTAM, generates the INOP.

If *code* is hex **0F**, *text* supplies additional information about the INOP type.

code (expressed in hexadecimal) can be:

01 Station INOP: There was a loss of contact, unexpected loss of connection, or a connection establishment failure.

This error type normally occurs after a successful connection has been established. When link-level errors occur, the boundary function will attempt link-level recovery procedures to recover the session. One of the definitions that affects this recovery activity is the RETRIES operand on the GROUP, LINE or PU definition statements. When normal recovery fails, a higher level of recovery is needed. That recovery is identified by this message.

This type of failure is normally followed by message IST619I and later by IST621I or IST129I to report the success or failure of the recovery actions. A RECMS RU should always accompany this error. The RECMS is saved as a miscellaneous data record (MDR) on the system error recording data set or is passed to NPDA. Use Netview/NPDA or EREP to do the analysis.

02 Link failure.

03 Station INOP: SDLC Disconnect request received. An SNA-PU SDLC connection has terminated its link manager and is informing the primary station that it is not available (for example, it is offline).

04 Station INOP: SDLC Request Disconnect response received. During normal SDLC link activity, a RR poll received a DISC. This usually means that the secondary station is requesting a DISC from the primary.

05 Station INOP: SDLC Disconnect Mode received. The transmitting secondary SDLC station is disconnected.

06 Station INOP: IPL or dump in progress.

07 Station INOP: Remote power off (RPO) in progress.

08 Link: Unconditional reset by force deactivate DACTLINK.

0A X.21 switched link: Outgoing call establishment failed because the X.21 call-progress signal was received but is not included in bytes 6-7.

0B X.21 switched link: Outgoing call establishment failed because of data circuit-terminating equipment (DCE) signaling DCE clear condition.

0C X.21 switched link: Outgoing call establishment failed because of expiration of time-out on changing DCE conditions.

0D X.21 switched link: There was an unexpected loss of connection during the X.21 call phase.

0E X.21 switched link: A failure occurred during the X.21 call-clearing phase.

0F X.21 switched link: An outgoing call establishment failed. X.21 call progress signals were received and are included in the INOP.

FD BSC line: BSC cluster PU=YES modem failure occurred. The line and the PU will be deactivated.

FE Station INOP: Station INOP on S/370™ channel-link occurred.

FF Link: S/370 channel-link failure occurred.

text is displayed if *code* is hex **0F**, and describes the call progress signal (CPS).

text can be one of the following:

IST260I

- **CPS = UNRECOGNIZED CALL PROGRESS SIGNAL**
- **CPS =** *yy* **– [***descr***]**

The values of *yy* (expressed in decimal) and optionally *descr* can be one of the following:

yy	*descr*
20	**NO CONNECTION**
21	**NUMBER BUSY**
22	**PROCEDURE ERROR**
23	**TRANSMISSION ERROR**
41	**ACCESS BARRED**
42	**CHANGED NUMBER**
43	**NOT OBTAINABLE**
44	**OUT OF ORDER**
45	**CONTROLLED NOT READY**
46	**UNCONTROLLED NOT READY**
47	**DCE POWER OFF**
48	**INVALID FACILITY REQUEST**
49	**NETWORK FAULT IN LOCAL LOOP**
51	**CALL INFORMATION SERVICE**
52	**INCOMPATIBLE USER**
61	**NETWORK CONGESTION**
71	**L.T. NETWORK CONGESTION**
72	**RPOA OUT OF ORDER**
81	**REGISTRATION/CANCELLATION CONFIRMED**

System Action: Processing continues.

Notes:

1. VTAM does not attempt recovery for error code **02**. Link failures are not recoverable.
2. If an INOP occurs before processing of an earlier INOP, VTAM does not attempt recovery. The node is deactivated.
3. For switched PUs:
   - For peripheral PUs, VTAM does not attempt recovery for any error codes.
   - For subarea PUs, VTAM attempts recovery only for error code **01**.

Operator Response: This is probably a hardware error. Save the system log for problem determination. Run your operating system service aid program to determine if MDR/OBR information has been recorded. See the *EREP User's Guide and Reference* for more information on service aid programs.

If you use a network management application such as NetView, check to see if an alert was recorded for this INOP code.

See the *z/OS Communications Server: SNA Diagnosis Vol 1, Techniques and Procedures* for additional information on non-VTAM subarea network problems associated with this message and for examples of IST259I problems and diagnosis.

Programmer Response: If you cannot determine the cause of the problem from the output provided or need additional assistance, contact the IBM hardware support center.

If available, provide the MDR/OBR information from your operating system service aid program or the alert information recorded by your network management application.

IST260I *ncpname* **—** *sscpname* **SESSION LOST, SA** *subarea* **CODE** *code*

Explanation: The session between SSCP *sscpname* and NCP *ncpname* failed. *subarea* is the subarea of *ncpname*. The hexadecimal reason code *code* can be one of the following:

07 Virtual route inoperative: VR INOP received for the virtual route used by the SSCP-PU session.

0A Forced deactivation of the SSCP-PU session: DACTPU received by the PU.

0B Virtual route deactivated: A forced deactivation occurred for the virtual route used by the SSCP-PU session.

0C SSCP failure.

Note: If *sscpname* is *****NA*****, the name for this SSCP was not available or could not be determined.

System Action: None.

Operator Response: If you have been instructed to provide backup procedures for *ncpname*, do so.

Programmer Response: Define the recovery procedures that the network operator should perform when VTAM issues this message.

IST262I **{ACBNAME|LUNAME} =** *nodename***, STATUS =** *status*

Explanation: This message is part of a group of messages that VTAM issues in response to a DISPLAY TSOUSER command. It appears twice in the group, first with **ACBNAME** displaying the application status *status* of the application name *nodename* with which the TSO user ID is associated, and second with **LUNAME** displaying the status *status* of the logical unit *nodename*.

See the *z/OS Communications Server: IP and SNA Codes* for a description of *status*.

Note: Other messages in this group display the name of the TSO user ID associated with the application and the logical unit (LU). This message is followed by message IST486I, which indicates the current status of the TSO user ID.

If the TSO user ID has been disconnected from the LU, the LU *status* will still be **ACT/S** (active and in session) if it is in session with another application. To find the LU's session partner, you may enter a DISPLAY ID command for the logical unit *nodename*.

System Action: Processing continues.

Operator Response: None.

Programmer Response: None.

IST264I **REQUIRED** *resource* **[***luname***]** *reason*

Explanation: VTAM issues this message as part of a group of messages when a resource requests a session, and the session initiation request fails for one of the reasons listed below. The first message in the group is IST663I.

Message IST664I, which is part of the IST663I message group, shows the names of the partners for which a session could not be established.

The combination of *resource* and *reason* may be any of the following:

ADJSSCP TABLE
  UNDEFINED
COS NAME *cosname*
  UNDEFINED
LOGMODE NAME *logmode*
  UNDEFINED
RESOURCE *luname*
  UNDEFINED
RESOURCE *luname*
  NOT ACTIVE
RESOURCE *luname*
  UNSTABLE (device-type LUs only)
RESOURCE *luname*
  DISABLED
RESOURCE *luname*
  QUIESCING
RESOURCE *luname*
  BLOCKING LOGONS (for application PLUs only)
STORAGE
  NOT AVAILABLE

luname appears when *resource* is **RESOURCE**. *luname* is the real name of the LU or application that was in error. If the SLU is not known, *****NA***** is displayed for *luname*.

- If *luname* is the SLU, the resource is undefined, not active, disabled, or quiescing.

- If *luname* is the PLU, the resource is undefined, not active, disabled, quiescing, or blocking logons.
- For *cosname*, no COS (class-of-service) entry with that name has been defined. *cosname* is blank if the default class of service was used.
- For *logmode*, the logon mode is not valid for the SLU because:
  - The logon mode is not in the logon mode table for the SLU in the VTAM definition statements.
  - No logon mode table is associated with the SLU, and the logon mode is not included in the default logon mode table.
  - No valid logon mode table is associated with the SLU, and no default logon mode table exists.
- If *logmode* is not provided or contains blanks, IST264I is still issued. ***NA*** is displayed for *logmode*.

System Action: VTAM rejects the session initialization request. The session setup fails.

Operator Response: Follow the appropriate action:

- If the required resource is **UNDEFINED**, enter a VARY ACT command to activate the resource major node in which the resource is defined.
- If the required resource is **NOT ACTIVE**, enter a VARY ACT command to activate the resource. If the resource is an application program, start it.
- If the required resource is **UNSTABLE**, it may be going through some type of error recovery process. This can be due to ERP, an INOP, or session termination. Display the resource and retry the request after it has recovered.
- If the required resource is **DISABLED** and it is a device type LU, check to see if it is powered on.
- If the required resource is **DISABLED** and it is an application program, start the application program or ensure that the application has issued SETLOGON START.
- If the required resource is an application program and is **QUIESCING**, SETLOGON QUIESCE is in effect. The application program is shutting down and cannot accept new sessions unless VTAM closes and reopens the ACB.
- If the required resource is an application program, and the ACB was opened with MACRF=NLOGON, it is **BLOCKING LOGONS**. The only LU-LU sessions allowed for the application program are those initiated by the application program itself using OPNDST OPTCD=ACQUIRE.
- For a **LOGMODE** problem, verify that the resource specified the correct logon mode on the request. You can use the DISPLAY ID command to determine the table identified for the resource. You can use the MODIFY TABLE command to change the logon mode table name associated with a resource.
- If **STORAGE** is **NOT AVAILABLE**, wait a short time and reenter the command. If VTAM continues to issue this message, enter the DISPLAY BFRUSE command. Enter the DISPLAY STORUSE command to display storage usage for storage pools. Save the system log and dump for problem determination.

Programmer Response:

- For a **COS** problem, verify that you have defined the class of service.
- For a **LOGMODE** problem, either correct the logon mode table currently assigned to the SLU or assign a different logon mode table that does contain the correct mode.
- For a **STORAGE** problem, increase storage as required. For insufficient storage errors, you might want to redefine your buffer pool or CSA limits. If the start option cannot be modified using the MODIFY VTAMOPTS command, you must modify the VTAM start options file (ATCSTRxx) and restart VTAM to use the start option.
  - See the *z/OS Communications Server: SNA Migration* to determine the storage requirements for VTAM.
  - See the *z/OS Communications Server: SNA Resource Definition Reference* for a description of VTAM start options.
  - See the *z/OS Communications Server: SNA Operation* for information about the DISPLAY BFRUSE Command, the DISPLAY STORUSE Command, and the MODIFY VTAMOPTS Command.
  - See the *z/OS Communications Server: SNA Network Implementation Guide* for an explanation and description of buffer pools and for general information on buffer pool specification and allocation.
  - See the *z/OS Communications Server: SNA Diagnosis Vol 2, FFST Dumps and the VIT* for information about analyzing dumps and about analyzing storage using the VIT analysis tool, if external trace is active.

IST265I *command* **FOR ID =** *nodename1* **FAILED — DUP** *nodename2* **HL** *highernode*

Explanation: VTAM rejected *command* for node *nodename1* because this domain already has an active resource *nodename2*. *highernode* is the higher level nodename (either a PU name or a major node name) of *nodename2*.

System Action: VTAM rejects the command.

Operator Response: If the network requires *nodename1*, deactivate the segment that contains *nodename2* with the higher level node *highernode*, or enter a VARY REL command to release it.

If *nodename1* and *nodename2* are required simultaneously, one of the names must be changed. Save the system log for problem determination.

Programmer Response: Change one of the resource names if both are needed simultaneously.

IST266I *subtask* **STARTED**

Explanation: VTAM issues this message in response to a MODIFY SUBTASK,FUNCTION=ATTACH command to start a specific *subtask*. The *subtask* could be TPRINT, subsystem support services, batch transfer program, or any routine for which the operator can enter a MODIFY SUBTASK,FUNCTION=ATTACH command. This message indicates that VTAM has successfully attached *subtask* as a subtask of VTAM.

System Action: VTAM successfully completed processing the MODIFY command.

Operator Response: None.

Programmer Response: None.

IST270I **LOAD OF** *ncpname* **COMPLETE — LOAD MODULE =** *loadmodname*

Explanation: In response to a VARY ACT command, or to an NCP reload after an error recovery procedure, VTAM successfully loaded the communication controller NCP *ncpname* with load module *loadmodname*. The communication controller is now ready for use.

System Action: Processing continues.

Operator Response: None.

Programmer Response: None.

IST271I **JOBNAME =** *jobname*, **STEPNAME =** *stepname*, **DSPNAME =** *dspname*

Explanation: This message is part of a group of messages that VTAM issues in response to a DISPLAY ID command for an application program. The *jobname* and *stepname* listed are those of the job controlling the application program at the time of the request.

dspname is the name of the data space associated with the application program. The data space name is generated automatically when the data space is created by VTAM and is in one of the following formats:

ACY*ccccc*
: *ccccc* is **0-FFFFC**

IST*ccccc*
: *ccccc* is **0-FFFFC**

*ccccc***IST**
: *ccccc* is **1-99999**

If *jobname*, *stepname*, or *dspname* are not available, VTAM issues ***NA***.

System Action: Processing continues.

Operator Response: None.

Programmer Response: None.

IST272A **NO INITIAL TEST FOR** *controller* **— REPLY 'U' TO BYPASS — OR CANCEL**

Explanation: While processing a VARY ACT command or during error recovery processing, VTAM attempted to load the communication controller *controller*. However, VTAM could not use the initial test routine of the load utility program prior to loading because VTAM could not use the file containing the initial test program.

The reason for this is either a permanent I/O error or erroneous or missing job control statements.

System Action: VTAM waits for a reply.

Operator Response: Either:

- Enter 'U' to bypass the initial test routine, that is, to initiate loading of the NCP without testing the hardware.
- Enter 'CANCEL' to cancel the loading operation.

Note: For additional information on how to respond to this message, see "Responding to a VTAM message" on page 2.

Programmer Response: Check that the job control statements for the VTAM start procedure contain a DD statement with DDNAME INITEST and that the initial test program resides on SYS1.LINKLIB.

IST278A INVALID REPLY FOR ID = *controller* **LOAD — ENTER 'U' — OR CANCEL**

Explanation: The operator issued an invalid response to message IST272A. The message asked whether to load the communication controller *controller* with an NCP. The only valid responses are:

- 'U'—to bypass the initial test routine. In this case, the NCP is loaded without testing the hardware.
- 'CANCEL'—to cancel the request.

System Action: VTAM waits for a valid reply.

Operator Response: Examine previous messages about the communication controller in question and then make a valid reply. Any unacceptable reply will cause a repetition of this message.

Note: For additional information on how to respond to this message, see "Responding to a VTAM message" on page 2.

Programmer Response: None.

IST282A INVALID REPLY FOR ID = *controller action reason*

Explanation: The operator issued an invalid response to message IST095A or IST284A.

action can be one of the following:

- **RELOAD**
- **DUMP**

reason can be one of the following:

- **SYNTAX ERROR**
- **DUMPSTA =** *dumpstaname* **IS NOT AVAILABLE**
- **LOADSTA =** *loadstaname* **IS NOT AVAILABLE**

Valid responses are:

NO Applies to IST095A and IST284A
YES Applies to IST095A and IST284A
YES,DUMPSTA=*dumpstaname*
Applies to IST095A only
YES,LOADSTA=*loadstaname*
Applies to IST284A only

If the message indicates that dump *dumpstaname* or load station *loadstaname* is not available, then the link station is not active or is not connected to the communication controller *controller*, or the dump station *dumpstaname* does not support dump.

System Action: VTAM reissues the original message.

Operator Response: Enter YES if you want to dump or load the communication controller contents, NO if not.

Note: For additional information on how to respond to this message, see "Responding to a VTAM message" on page 2.

Programmer Response: None.

IST284A OPTION TO RELOAD *controller* **AVAILABLE — REPLY 'YES' OR 'NO' OR 'YES,LOADSTA=LINKSTANAME'**

Explanation: The NCP running in communication controller *controller* has failed.

- If you want to reload the communication controller (over a channel), VTAM will determine whether the communication controller still needs to be loaded, and will proceed with the reload, if necessary.
- If you want to reload the communication controller (over an SDLC link), VTAM loads the communication controller automatically.
- If this host is not to reload the communication controller, as in the case of a shared communication controller where another host performs the reload, those link stations formerly in contact with the failed NCP will be activated. Reply NO after the completion of such a reload by another host.

System Action: VTAM waits for a reply. The nodes associated with this communication controller are inaccessible.

Operator Response: If this communication controller is multiple-channel or multiple-link attached, coordinate your reply with the reply of the operators of the other affected domains.

Each recovery operation **must** be completed before the next one is started.

To start reloading the controller in your domain using the default link station specified at VARY ACT or NCP generation, enter a reply of YES.

To specify a different link station, enter YES,LOADSTA=*linkstaname* where *linkstaname* is the name of the link station. If YES,LOADSTA= is specified without a link station name, VTAM chooses a default link station.

If you do not want this host to reload the communication controller, enter a reply of NO. In this case, if another host does not reload this communication controller, the communication controller's resources will be unusable. You may wish to enter a VARY INACT command to deactivate the NCP.

If all hosts sharing this communication controller specified NO and you subsequently decide to reload it with a VARY ACT command, you must enter a VARY INACT command **first** to deactivate it.

Note: For information on how to respond to this message, see "Responding to a VTAM message" on page 2.

Programmer Response: None.

IST285I *dumptype* **DUMP OF** *resourcename status*

Explanation: VTAM issues this message when the contents of the communication controller have been scheduled to be dumped to a disk, or have successfully or unsuccessfully been dumped to a data set.

resourcename is one of the following:

- The name of the NCP.

  The data set is named in the DUMPDS operand of the MODIFY DUMP command or the DUMPDS, CDUMPDS, or MDUMPDS operands on the PCCU definition statement for the specified NCP.
- The name of an SDLC link station within an NCP in a communication controller that is adjacent to the communication controller containing the NCP to be dumped.

dumptype can be one of the following:

STATIC
NCP processing stops. The contents of the communication controller are dumped by microcode services, and VTAM deactivates the major node associated with *resourcename*.

DYNAMIC
NCP processing continues while the NCP contents are dumped. VTAM does not deactivate the NCP.

MOSS
VTAM transfers a maintenance operator subsystem dump contained on the MOSS disk in the IBM 3720, 3725, or 3745 Communication Controller to a host data set.

CSP
VTAM transfers a communication scanner processor dump contained on the MOSS disk to a host data set.

TRANSFER
VTAM transfers an NCP dump contained in the IBM 3720, 3725, or 3745 Communication Controller to a host data set.

status can be one of the following:

CANCELLED — PATH BLOCKED
VTAM attempted the dump but was unable to access the controller because it was being dumped or loaded by another host.

CANCELLED — PATH NOT OPERATIONAL
VTAM attempted the dump but was unable to access the controller because the channel path was not operational. This is probably because the controller is in the process of being dumped or loaded by another host. However, this can also indicate a hardware or software problem.

COMPLETE
The dump is complete.

PARTIALLY COMPLETE
During dump processing, a permanent I/O error occurred on the communication controller, the dump data set, or the SDLC link. A portion of the dump is not usable. The dump dataset may be too small to contain the entire dump.

Note: If ACTION=TRANSFER and either TYPE=CSP or TYPE=MOSS were specified on the MODIFY DUMP command, the BER log, CDF, TIC dump, and CA dump are transferred from the hard disk even when the CSP or MOSS dump is not present on the disk. This message indicates that data has been transferred to the dump dataset even though the specified dump was not present.

SCHEDULED TO DISK
The dump to disk request has been forwarded to the NCP *resourcename*.

STARTED
The dump has begun.

FAILED — PERMANENT I/O ERROR
During dump processing, an unrecoverable I/O error occurred on the communication controller or the dump data set. The dump is unusable.

FAILED — *ddname* **CANNOT BE OPENED**
VTAM attempted the dump, but could not open the dump data set defined by *ddname*. Dump processing terminated.

FAILED — UNSUPPORTED DEVICE TYPE
VTAM attempted the dump, but could not open the dump data set because it was located on an unsupported device. Dump processing terminated.

System Action: If *status* is:

CANCELLED — PATH BLOCKED
The dump terminates, and VTAM waits for contact with NCP *resourcename* to be re-established.

CANCELLED — PATH NOT OPERATIONAL
The dump terminates, and VTAM waits for contact with NCP *resourcename* to be re-established.

COMPLETE
Processing continues.

PARTIALLY COMPLETE
The dump terminates.

SCHEDULED TO DISK
Processing continues.

STARTED
The dump has begun.

FAILED — PERMANENT I/O ERROR
The dump terminates.

FAILED — *ddname* CANNOT BE OPENED
The dump terminates.

FAILED — UNSUPPORTED DEVICE TYPE
The dump terminates.

Operator Response: If *status* is:

CANCELLED — PATH BLOCKED
None.

CANCELLED — PATH NOT OPERATIONAL
If contact with NCP *resourcename* is not re-established in a few minutes, save the system log for problem determination.

COMPLETE
You can format the entire dump using the NCP dump utility program.

PARTIALLY COMPLETE
If the dump is valid and enough data was saved, you can format and print the portion of the dump that was taken using the NCP dump utility program. Dump utility messages will provide information about the validity of the dump and data saved.

Attempt to dump the NCP using the NCP dump utilities. See the *NCP, SSP, and EP Diagnosis Guide* for information on using the NCP dump utilities.

Save the system log for problem determination, and run your operating system service aid program. See the *EREP User's Guide and Reference* for more information on using EREP.

SCHEDULED TO DISK
Re-establish communication with the NCP *resourcename* and query the MOSS disk for the dump status. If the dump is present, you can use the MODIFY DUMP command to transfer the dump to a host data set. The dump can be formatted and printed using the utility program.

STARTED
None.

FAILED — PERMANENT I/O ERROR
This is probably a hardware error.

- Make sure the communication controller is powered on.
- Check the HARD STOP and PROGRAM STOP indicators on the communication controller operator panel. If either indicator is on, press the LOAD switch.
- If the communication controller is switchable between processors, make sure the communication controller is switched to the VTAM host processor.
- Attempt to dump the NCP using the NCP dump utilities. See the *NCP, SSP, and EP Diagnosis Guide* for information on using the NCP dump utilities.
- Save the system log for problem determination, and run your operating system service aid program. See the *EREP User's Guide and Reference* for more information on using EREP.

FAILED — *ddname* CANNOT BE OPENED
If you specified the dump data set name correctly, save the system log for problem determination.

FAILED — UNSUPPORTED DEVICE TYPE
Ensure that the dump data set resides on a supported access device. If the problem persists, save the system log for problem determination.

Programmer Response: If *status* is:

CANCELLED — PATH BLOCKED
None.

CANCELLED — PATH NOT OPERATIONAL
Take the following actions:

1. Check the channel definition in the NCP definition library to ensure that the channel adapter that failed is defined to NCP *resourcename*.

2. If the channel adapter is correctly defined to NCP *resourcename*, this is probably a hardware error. Ensure that the channel adapter is online from MOSS.
3. If the channel adapter is online, and you continue to have problems, contact the IBM hardware support center.

COMPLETE
None.

PARTIALLY COMPLETE
You may need to increase the size of the dump dataset. If you cannot determine the cause of the problem from the output provided or need additional assistance, contact the IBM hardware support center.

SCHEDULED TO DISK
None.

STARTED
None.

FAILED — PERMANENT I/O ERROR
If you cannot determine the cause of the problem from the output provided or need additional assistance, contact the IBM hardware support center.

FAILED — *ddname* **CANNOT BE OPENED**
Ensure that

- The dump data set name is spelled correctly on either the DUMPDS operand of the MODIFY DUMP command or the DUMPDS, CDUMPDS, or MDUMPDS operands of the PCCU definition statement.
- The appropriate JCL statements are included with the VTAM start options.

Check the output provided by the operator to ensure that all requirements for VTAM are correct for your system. When you have corrected the error condition, ask the operator to reenter the command.

FAILED — UNSUPPORTED DEVICE TYPE
Check the output provided by the operator to ensure that all requirements for VTAM are correct for your system. When you have corrected the error condition, ask the operator to reenter the command.

IST302I INVALID DEFINITION TYPE IN MEMBER *member* **IN VTAM DEFINITION LIBRARY**

Explanation: VTAM issues this message when:

- The first definition statement or macro in major node definition *member* is not valid. The statement in error can be an operand on the definition statement. One possible cause of this error is that a definition statement is in the wrong column.
- The first definition statement or macro in major node definition *member* is not compatible with a VTAM start option or the start option is not specified correctly.

Note: Activating an NCP requires special consideration. VTAM selects the PCCU definition statement associated with this host by comparing the SUBAREA keyword value with the subarea of this host (specified by HOSTSA start option). If VTAM finds no PCCU definition statement with that subarea value, VTAM issues this message. For further information, see the descriptions of the PCCU definition statement and the HOSTSA start option in the *z/OS Communications Server: SNA Resource Definition Reference*.

System Action: VTAM does not include major node *member* in the VTAM network.

Operator Response: Save the system log for problem determination, and print the major node definition.

Programmer Response: Correct the definition that is not valid and update *member* in the definition library.

IST303I INSUFFICIENT STORAGE TO BUILD CONFIGURATION *configname*

Explanation: VTAM terminated processing of major node *configname* because the storage required for internal VTAM tables associated with that major node is not available.

The size of the storage requested exceeds the limit that can be allocated for a single request. For example, activating a major node with too many resources defined.

System Action: VTAM does not include major node *configname* in the VTAM network.

Operator Response: Total VTAM private storage information is also displayed in message IST981I. Enter the DISPLAY STORUSE command to display storage usage for storage pools.

Save the system log and request a dump for problem determination.

If necessary, reduce the number of resources in the major node *configname* being activated.

Programmer Response: This message indicates an underestimation of storage requirements for the VTAM address space.

- See the *z/OS Communications Server: SNA Diagnosis Vol 2, FFST Dumps and the VIT* for information about analyzing dumps and about analyzing storage using the VIT analysis tool, if external trace is active.
- See the *z/OS Communications Server: SNA Operation* for information about the DISPLAY BFRUSE Command and the MODIFY VTAMOPTS Command.

IST309I UNABLE TO LOAD MODULE *loadmodname* **FROM LIBRARY [***laryname***]**

Explanation: VTAM could not load the communication controller (NCP, RRT) specified by *loadmodname* from library *laryname*.

System Action: VTAM could not activate the communication controller associated with the load module and library combination.

Operator Response: Save the system log for problem determination.

Programmer Response: Inspect *laryname* for missing or misnamed *loadmodname*. If *loadmodname* is missing, assume that the NCP was not generated successfully. Check the NCP generation output, correct the NCP system generation, and retry the activation.

IST310I INVALID SPACE REQUEST FOR CONFIGURATION *majornode*

Explanation: VTAM issues this message in response to a VARY ACT command for *majornode*. VTAM cannot proceed because it encountered an entry that does not fit in the preallocated build area.

System Action: The VTAM network will not contain major node *majornode*.

Operator Response: Retry the VARY ACT command for this major node. If the condition persists, save the system log for problem determination.

Programmer Response: Check the output provided by the operator to ensure that all requirements for VTAM are correct for your system. See the *z/OS Communications Server: SNA Diagnosis Vol 1, Techniques and Procedures* for more information on diagnosing VTAM problems.

IST311I NCP LOAD MODULE LIBRARY *laryname* **— FAILED TO OPEN**

Explanation: VTAM attempted to open the communication controller NCP load module library *laryname*, but the OPEN failed.

System Action: VTAM cannot activate a communication controller whose NCP system generation output is on library *laryname*.

Operator Response: Ensure that you entered *laryname* correctly. If problems persist, save the system log for problem determination.

Programmer Response: Use the output provided to assist you in determining the reason for the failure. When the problem is corrected, retry the activation of the communication controller.

IST314I END

Explanation: This message marks the end of a message group. See previous messages in the group for more information.

IST315I VTAM INTERNAL TRACE ACTIVE – MODE = *modename*, **SIZE =** *sizeunit*

Explanation: This message is part of a group of messages. Possible message groups follow.

- This message group is issued in response to a MODIFY TRACE,TYPE=VTAM command or when TRACE,TYPE=VTAM is specified on the TRACE start option.

  Note: This message group is always issued at VTAM startup even if no trace options have been requested because the VTAM internal trace is automatically started with options API, PIU, MSG, NRM, and SSCP.

```
IST315I  VTAM INTERNAL TRACE ACTIVE – MODE = EXT, SIZE = bfrnum BUFFERS
IST199I  OPTIONS = {NONE|optionlist}
IST315I  VTAM INTERNAL TRACE ACTIVE – MODE = INT, SIZE = size PAGES
IST1659I DATA SPACE dspname DSPSIZE = dspsize actsize
IST199I  OPTIONS = {NONE|optionlist}
IST1730I SUBTRACE subtrace ACTIVE UNDER TRACE OPTION traceoptIST314I  END
```

- This message group is issued in response to a DISPLAY TRACES command when TYPE=VTAM or TYPE=ALL is specified on the command.

```
IST350I  DISPLAY TYPE = TRACES,TYPE=VTAM
IST315I  VTAM INTERNAL TRACE ACTIVE – MODE = EXT, SIZE = bfrnum BUFFERS
IST199I  OPTIONS = {NONE|optionlist}
IST315I  VTAM INTERNAL TRACE ACTIVE – MODE = INT, SIZE = size PAGES
IST1659I DATA SPACE dspname DSPSIZE = dspsize actsize
IST199I  OPTIONS = {NONE|optionlist}
IST1730I SUBTRACE subtrace ACTIVE UNDER TRACE OPTION traceoptIST314I  END
```

IST350I

This message identifies the type of information shown in the display. For this message group, *type* is always **TRACES,TYPE=VTAM**, and the display contains the status of the VTAM internal trace.

IST315I

modename is **EXT** (external) or **INT** (internal) and indicates where the VTAM internal trace data is recorded.

– If **MODE = EXT**:
  - The external trace is writing records to a generalized trace facility (GTF) data set.
  - *bfrnum* specifies the number of 8K GTF buffers that VTAM is using for external trace processing. VTAM will accumulate approximately 8K of external trace data prior to sending the data to GTF via GTRACE. If 0 is indicated then VTAM is sending each trace record (or logical group of trace records) individually to GTF via GTRACE. Running in this mode should be avoided due to the large system overhead involved. It is only provided for backward compatibility reasons.
  - *unit* is always BUFFERS for **MODE = EXT.**

– If **MODE = INT**:
  - The internal trace is writing records in an internal trace table.
  - *size* specifies the number of pages allocated for the internal trace table. When these pages have been filled, the table wraps.

    The default and minimum internal trace table size is 100 pages.

    Storage for the internal trace table is obtained from the extended common service area (ECSA).
  - *unit* is always PAGES for **MODE = INT.**

IST199I

This message displays the functions being traced. A list of all user-selected options being traced for TYPE=VTAM appears in this message.

If **MODE = INT** and **OPTIONS = NONE**, this indicates that no user-selected internal trace options are active. Only exception conditions and certain trace entries are being traced.

optionlist can include the following options:

API
Application program interface

APPC
LU 6.2 communication

CFS
Coupling facility services
CIA
Channel I/O Auxiliary
CIO
Channel I/O
CMIP
CMIP services and the VTAM topology agent
CSM
Communications storage manager
ESC
Execution sequence control
HPR
High performance routing
LCS
LAN channel station
LOCK
VTAM locking services
MSG
Message to operator
NRM
Network resource management
PIU
Path information unit
PSS
Process scheduling services
SMS
Storage management services
SSCP
System services control point
TCP
VTAM to TCP/IP interface events
VCNS
VTAM Common Network Services
XBUF
Extended buffer list
XCF
Cross coupling facility

See the *z/OS Communications Server: SNA Diagnosis Vol 1, Techniques and Procedures* for more information about VTAM internal trace options.

IST1659I

dspname is the name of the data space.

dspsize is the number of 10 megabyte units allocated for the data space storage of the internal trace table. For example, *dspsize* of 5 represents 50 megabytes. When the table in the data space has been filled, the table wraps.

The default size is zero, meaning the data space table will not be used.

If *dspsize* is greater than 0, storage for the internal trace table is obtained from data space *dspname*.

actsize is the actual size of the data space table in megabytes. *actsize* is *dspsize* multiplied by 100 megabytes.

IST1730I

subtrace is the SUBTRACE type currently active. The values for *subtrace* are **TREE** and **ARBP**.

traceopt is the trace option associated with the SUBTRACE type. The values for *traceopt* are **SSCP** and **HPR**.

This message displays an active SUBTRACE type and its associated trace option. The trace option must be specified on the command used to activate or inactivate the subtrace type.

The SUBTRACE type TREE under trace option SSCP traces APPN routing trees used for APPN sessions.

The SUBTRACE type ARBP under trace option HPR traces ARBP entries for all RTP connections utilizing the ARBP algorithm.

System Action:

- If this message is in response to a MODIFY TRACE command or a TRACE start option, the VTAM internal trace (VIT) begins.
- If this message is in response to a DISPLAY TRACES command, other processing continues.

Operator Response: If you want to dump the trace records, use your installation-defined procedure or obtain instructions from the system programmer. Refer to *z/OS Communications Server: SNA Diagnosis Vol 1, Techniques and Procedures* for more information on the VTAM internal trace.

Programmer Response: None.

IST316I VTAM INTERNAL TRACE USER OPTIONS ARE NOT ACTIVE

Explanation: VTAM issues this message in response to a DISPLAY TRACES command or a MODIFY NOTRACE,TYPE=VTAM,OPT=END command. This message indicates that all user-selected internal trace options are now inactive.

System Action: Processing continues.

Operator Response: None.

Programmer Response: None.

IST317I VTAM INTERNAL TRACE ACTIVATION FAILED — INSUFFICIENT STORAGE

Explanation: VTAM attempted to activate its internal trace as a result of a MODIFY TRACE,TYPE=VTAM command, or as a result of a TRACE,TYPE=VTAM start option. The attempt to obtain storage for a trace table failed.

System Action: VTAM rejects the request.

Operator Response: ***If VTAM has been initialized***, wait a short time and reenter the command. If VTAM continues to issue this message, and a smaller trace-table size is sufficient, specify a smaller value on the SIZE operand of the MODIFY command used to initiate the VTAM internal trace. If a smaller trace-table size is not sufficient, enter the DISPLAY BFRUSE command. Save the system log and dump for problem determination.

If VTAM initialization failed, save the system log for problem determination.

Programmer Response: Make sure that you have specified the correct size for the trace table. If you need a larger trace table, increase the size of the common service area (CSA).

Increase storage as required. For insufficient storage errors, you might want to modify your CSA start options by using the MODIFY VTAMOPTS command.

- See the *z/OS Communications Server: SNA Resource Definition Reference* for a description of VTAM start options.
- See the *z/OS Communications Server: SNA Operation* for information about the DISPLAY BFRUSE Command and the MODIFY VTAMOPTS Command.

IST318I VTAM INTERNAL TRACE ACTIVATION FAILED — UNABLE TO FIX STORAGE

Explanation: VTAM issues this message in response to a MODIFY TRACE,TYPE=VTAM command or a TRACE,TYPE=VTAM start option. VTAM tried to start its internal trace, but the attempt failed for one of the following reasons:

- VTAM could not put the trace module into fixed storage.
- VTAM could not allocate storage for the trace table.

System Action: The attempt to activate a VTAM internal trace is rejected.

Operator Response:

- If you entered the size on the trace table incorrectly, reenter the MODIFY command with the correct size specified.
- If you specified the size correctly, wait for a period of less system activity. Then reenter the command, perhaps with a smaller size specified.
- If the command continues to fail, enter the DISPLAY BFRUSE command. Save the system log and dump for problem determination.

Programmer Response: Reduce the amount of fixed storage required by other programs or reduce the size of the

trace table. For insufficient storage errors, you might want to modify your CSA start options by using the MODIFY VTAMOPTS command.

- See the *z/OS Communications Server: SNA Resource Definition Reference* for a description of VTAM start options.
- See the *z/OS Communications Server: SNA Operation* for information about the DISPLAY BFRUSE Command and the MODIFY VTAMOPTS Command.

IST319I CONFIGURATION *configname* **FIRST SPECIFICATION USED** *reason*

Explanation: During the activation of configuration *configname*, VTAM encountered an error in an NCP definition statement or a VTAM definition statement.

reason can be one of the following:

COMBINATION ERROR
DUPLICATE PARAMETER
EXTRA PARAMETER
EXTRA VALUE

A second message, IST323I, provides details of the error.

System Action: The VTAM network will include *configname* defined with the first specification found.

Operator Response: Save the system log for problem determination.

Programmer Response: Use the information in this message and in message IST323I to determine the cause of the error. Correct the definition statement in error for future use.

The NCP definition statements are described in the *NCP Resource Definition Guide* and the *NCP Resource Definition Reference*

The VTAM definition statements are described in the *z/OS Communications Server: SNA Resource Definition Reference* .

IST320I DEFINITION *configname* **NOT SUCCESSFUL —** *reason*

Explanation: During activation of configuration *configname*, VTAM detected an error in an NCP definition statement or VTAM definition statement.

reason can be one of the following:

DUPLICATE MACRO
INSUFFICIENT STORAGE
INVALID MAJOR NODE NAME
INVALID NAME
INVALID PARAMETER
INVALID VALUE
MISSING PARAMETER
MISSING MACRO
MISSING NAME
PARAMETER CONFLICT
SEQUENCE ERROR
SYNTAX ERROR

A second message, IST323I, provides details of the error.

System Action: The VTAM network will not include configuration *configname*. If *reason* is **INVALID MAJOR NODE NAME**, the dynamic PUs and LUs supplied by the VTAM Configuration Services Exit will not be created.

Operator Response: If *reason* is **INSUFFICIENT STORAGE** and ***VTAM has been initialized***, wait a short time and attempt to reactivate *configname*. If VTAM continues to issue this message, enter the DISPLAY BFRUSE and DISPLAY STORUSE commands. Save the system log and request a dump for problem determination. If ***VTAM initialization failed***, save the system log for problem determination.

IST321I

For all other *reason*s, save the system log for problem determination.

Programmer Response: Use the information in this message and in message IST323I to determine the cause of the error. Correct the definition statement.

- If the error is in an NCP definition statement, correct the statement and regenerate the NCP. For more information on the NCP definition statements, refer to the *NCP, SSP, EP Resource Definition Guide* and the *NCP, SSP, and EP Resource Definition Reference*
- If the error is in a VTAM definition statement, update the VTAM definition library to correct the definition of configuration *configname*. For more information on VTAM definition statements, refer to the *z/OS Communications Server: SNA Resource Definition Reference* .
- If *reason* is **INSUFFICIENT STORAGE**, the storage required for internal VTAM tables is not available. Increase storage as required. For insufficient storage errors, you might want to redefine your buffer pool or CSA limits. If the start option cannot be modified using the MODIFY VTAMOPTS command, you must modify the VTAM start options file (ATCSTRxx) and restart VTAM to use the start option.
  - See the *z/OS Communications Server: SNA Migration* to determine the storage requirements for VTAM.
  - See the *z/OS Communications Server: SNA Resource Definition Reference* for a description of VTAM start options.
  - See the *z/OS Communications Server: SNA Operation* for information about the DISPLAY BFRUSE Command, the DISPLAY STORUSE Command, and the MODIFY VTAMOPTS Command.
  - See the *z/OS Communications Server: SNA Network Implementation Guide* for an explanation and description of buffer pools and for general information on buffer pool specification and allocation.
  - See the *z/OS Communications Server: SNA Diagnosis Vol 2, FFST Dumps and the VIT* for information about analyzing dumps and about analyzing storage using the VIT analysis tool, if external trace is active.
- If *reason* is **INVALID MAJOR NODE NAME**, the VTAM Configuration Services Exit, ISTEXCCS, has supplied a major node name to VTAM that is not valid. The following rules apply to the name supplied:
  - *configname* must be 1-8 characters
  - The first character must be alphabetic or national; remaining characters must be alphabetic, national, or numeric
  - *configname* must not start with IST

  Based on the preceding rules, if a valid name is supplied and the major node already exists, the following rules must also apply to the major node name:
  - The resource must be a switched major node.
  - The switched major node must be dynamic.
  - The major node must be in an ACTIVE state.

  You can use the MODIFY EXIT command to install a new version of ISTEXCCS.
- A possible reason for **INVALID VALUE** is that wildcard values are included in the name field of an APPL definition statement that includes the ACBNAME operand or that defines a TSO/VTAM application program (AUTH=TSO on the APPL definition statement). Check VTAMLST to determine if this is the case. You cannot use wildcard characters to define model definitions for TSO/VTAM application programs or for application programs that include the ACBNAME operand on their APPL definition statements.

IST321I CONFIGURATION *configname* **DEFAULT TAKEN —** *reason*

Explanation: During activation of configuration *configname*, VTAM encountered an error in an NCP definition statement or a VTAM definition statement.

reason can be one of the following:

COMBINATION ERROR
DUPLICATE PARAMETER
EXTRA PARAMETER
EXTRA VALUE
INVALID PARAMETER
INVALID VALUE
MISSING PARAMETER

A second message, IST323I, provides details of the error.

System Action: VTAM assumes the appropriate defaults and continues processing.

Operator Response: Save the system log for problem determination.

Programmer Response: Use the information in this message and in message IST323I to determine the cause of the error. Correct the definition statement in error for future use. The NCP definition statements are described in the *NCP Resource Definition Guide* and the *NCP Resource Definition Reference*. The VTAM definition statements are described in the *z/OS Communications Server: SNA Resource Definition Reference* .

IST322I CONFIGURATION *configname* **ERROR IGNORED —** *reason*

Explanation: During activation of configuration *configname*, VTAM encountered an error in an NCP definition statement or in a VTAM definition statement.

VTAM is ignoring the definition statement or an operand for one of the following *reason*s:

COMBINATION ERROR
DUPLICATE NAME
EXTRA PARAMETER
EXTRA VALUE
INVALID MACRO
INVALID NAME
INVALID PARAMETER
INVALID VALUE
MISSING NAME
MISSING PARAMETER
PARAMETER CONFLICT
SEQUENCE ERROR
SYNTAX ERROR
TABLE LOAD FAILURE
TABLE NOT FOUND
TABLE NOT VALID

Two additional messages, IST323I and IST330I, provide details of the error.

System Action: VTAM continues processing the definition statement, but ignores the incorrect operand.

Operator Response: If *reason* is **TABLE LOAD FAILURE**, **TABLE NOT FOUND**, or **TABLE NOT VALID**, try loading the table with the MODIFY TABLE command after the configuration is complete.

For all other *reason*s, save the system log and network logs, and print the major node definition for problem determination.

Programmer Response: Use the information in this message and in messages IST323I or IST330I to isolate the cause of the error.

If *reason* is **TABLE LOAD FAILURE** or **TABLE NOT FOUND**, ensure that the table exists in the system library.

If *reason* is **TABLE NOT VALID**, ensure that a valid table name was coded for the type of table being created. If not, correct the table name on the definition statement and reactivate the configuration *configname*. If *reason* is **TABLE NOT VALID** during a dynamic reconfiguration attempt involving a USS table, make sure the USSTAB is coded with FORMAT=DYNAMIC.

For all other *reason*s, correct the statement in error for future use. The NCP definition statements are described in the *NCP Resource Definition Guide* and the *NCP Resource Definition Reference*. The VTAM definition statements are described in the *z/OS Communications Server: SNA Resource Definition Reference* .

IST323I **LABEL =** *labelname* **— MACRO TYPE =** *macrotype* **— KEYWORD =** *keyword*

Explanation: This message supplements messages IST319I, IST320I, IST321I, IST322I, IST363I, IST886I, and IST979I. Although the definition may contain mixed cases, all values displayed in the message are in uppercase.

labelname is the name or label of the macro or statement in error.

macrotype is the type of macro.

keyword shows the actual keyword (or the first 8 characters of the keyword) that was in error.

System Action: The action carried out is given in the preceding message.

Operator Response: Save the system log for problem determination.

Programmer Response: Locate the keyword in error on the macro labeled *labelname*. Use the previous error message for the specific problem with that keyword.

If *macrotype* is **PU** and *labelname* is a model PU, check the definition to determine if the TRLE keyword is coded. The TRLE keyword signifies that the model PU is for XCF. An XCF model PU definition requires specific values to be coded for some keywords or to be allowed to default to the correct values.

See the *z/OS Communications Server: SNA Resource Definition Reference* for the correct use of VTAM operands on NCP definition statements.

Note: If *macrotype* is ***** and *keyword* is *****NA*****, then the error is due to miscoding a comment line in the definition deck. Comment lines must have an asterisk (*) in column one. Placing the asterisk in a different column will generate this error message.

IST324I *procedure* **IN PROGRESS WITH ID =** *nodename* **DUE TO** *runame* **REQUEST**

Explanation: VTAM issues this message when *procedure* for *nodename* is in progress.

procedure was initiated by request unit *runame* (a cross-domain request), which was sent from *nodename* to this domain's cross-domain resource manager (CDRM). Possible values of *procedure* are **INACT**, **ACTIVATE**, or **RESET**.

See Chapter 14, "Command and RU types in VTAM messages" on page 685 for a description of *runame*.

System Action: Processing continues.

Operator Response: Check with the operator of *nodename*'s domain. Determine whether further action is required in order to complete this request.

Programmer Response: None.

IST326I **REQUEST =** *runame* **FAILED FOR** *procedure* **ID =** *nodename***, SENSE =** *code*

Explanation: The processing of *procedure* for request unit (RU) *runame* in resource *nodename* failed. The cause of the failure is indicated by the sense *code*.

See Chapter 14, "Command and RU types in VTAM messages" on page 685 for a description of *runame*.

See the *z/OS Communications Server: IP and SNA Codes* for a description of *code*.

System Action: Processing continues. VTAM should complete processing of *procedure* successfully in this domain, but the status of *procedure* in *nodename*'s domain is uncertain.

Operator Response: If VTAM completes processing of *procedure* successfully, no response is necessary in this domain. However, notify the operator of *nodename*'s domain because action will be required to complete that domain's processing of *procedure*.

For example,

REQUEST = DACTCDRM FAILED FOR INACT ID = *nodename***, SENSE = 80020000**

One of the SNA requests sent during a cross-domain resource manager (CDRM) deactivation procedure is DACTCDRM. This request did not reach *nodename* because of a link failure (sense code 8002).

VTAM completes deactivation successfully in this domain, but the deactivation processing in *nodename*'s domain is waiting for the lost DACTCDRM. In this example, the operator in *nodename*'s domain should enter a DISPLAY ID

command for *nodename* followed by a VARY INACT,TYPE=FORCE command for this domain's CDRM in order to complete the deactivation procedure. Ask the operator of the other domain to complete the problem determination action.

Save the system log for problem determination.

Programmer Response: Use the output provided by the operator and the description of *code* to assist in determining the reason for the failure. See the *z/OS Communications Server: SNA Diagnosis Vol 1, Techniques and Procedures* for more information on diagnosing VTAM problems.

IST327I *procedure* **ID =** *nodename* **INCOMPLETE, REQUEST =** *runame***, SENSE =** *code*

Explanation: VTAM is unable to complete the processing of procedure *procedure*. This procedure (either INACT or ACTIVATE) was initiated by request unit (RU) *runame*. The cause is indicated by the sense *code*.

See Chapter 14, "Command and RU types in VTAM messages" on page 685 for a description of *runame*.

See the *z/OS Communications Server: IP and SNA Codes* for a description of *code*.

System Action: VTAM has not completed the processing of *procedure*.

Operator Response: Notify the operator of *nodename*'s domain that commands may have to be entered from that domain as well as from yours. Find out the commands and operands that were entered from that domain.

For example,

INACT ID = *nodename* **INCOMPLETE, REQUEST = CDTAKEDOWN, SENSE = 08090000**:

One of the requests sent during a cross-domain resource manager (CDRM) deactivation procedure is CDTAKEDOWN. CDRM *nodename* rejected this request because it and this domain's CDRM are not synchronized (08090000 indicates mode inconsistency). This could be caused by operator commands entered in the different domains interfering with each other, or by a system error in one of the CDRMs. Enter a VARY INACT command in both domains to complete the deactivation procedure.

Programmer Response: Consult *Systems Network Architecture Format and Protocol Reference Manual: Architectural Logic* for a description of how cross-domain protocols operate.

IST328I COMMUNICATION WITH CDRM ID = *cdrmname* **LOST**

Explanation: Communication with cross-domain resource manager *cdrmname* is no longer possible. *cdrmname's* subarea failed or a subarea in a migration mode path to *cdrmname* failed.

System Action: Although *cdrmname* and its existing sessions remain active, VTAM marks *cdrmname* as lost. VTAM can establish no new sessions with cross-domain resources managed by *cdrmname*. Existing sessions remain active as long as the physical path being used still exists.

Operator Response: To determine whether any sessions are active, enter a DISPLAY ID command for *cdrmname* and then enter a DISPLAY ID command for each cross-domain resource listed as active. This will show you which resources have sessions with *cdrmname*.

To establish new sessions, deactivate and then reactivate *cdrmname*. To deactivate *cdrmname*, use the VARY INACT,TYPE=FORCE command.

Follow the same procedure at other hosts involved in the lost subarea issue.

Programmer Response: None.

IST330I TABLE TYPE = *tabletype* **NAME =** *tablename*

Explanation: This message supplements message IST322I. VTAM could not load the table type *tabletype*, table name *tablename*.

For information about coding tables, see the *z/OS Communications Server: SNA Resource Definition Reference*.

System Action: VTAM continues processing using the previously loaded table.

Operator Response: If the problem persists, save the system log for problem determination.

Programmer Response: Ensure that *tablename* is the name of a *tabletype* table and that it exists in the definition library.

IST331I CONFIG *configname* **BYPASSED — 'MAXSUBA' VALUES CONFLICT**

Explanation: VTAM could not add the major node *configname* to the network for one of the following reasons:

- The MAXSUBA start option value in effect at the time the major node was first activated does not equal the value specified in the MAXSUBA start option.
- If the major node is a communication controller, the MAXSUBA value specified in the NCP BUILD generation definition statement does not equal the value specified in the MAXSUBA start option.

MAXSUBA is used only for migration purposes in order to communicate with a pre-V3R1 level of VTAM.

System Action: VTAM does not include major node *configname* in the VTAM network.

Operator Response: Save the system log for problem determination.

Programmer Response: The MAXSUBA values must match. Change the appropriate VTAM definition in the definition library.

- If the MAXSUBA value in the start option does not match the value that was in effect when the major node was activated, restart VTAM with the correct MAXSUBA value.
- For a communication controller, if the MAXSUBA value specified in the BUILD definition statement is incorrect, correct the BUILD definition statement, and regenerate the NCP.

Note: MAXSUBA can be coded on the NETWORK definition statement in the NCP. In a nonnative network, this is the MAXSUBA value that must match.

See the *z/OS Communications Server: SNA Resource Definition Reference* for more information on the MAXSUBA start option and the BUILD definition statement.

IST333I CONFIG *configname* **USING DUPLICATE RESOURCE NAME** *minornode* **— CODE 3**

Explanation: VTAM issues this message when the node name *minornode* used in major node *configname* duplicates a name already known to VTAM. All node names within a domain must be unique.

System Action: The node name *minornode* defines a subordinate node within an NCP definition. The major node *configname* is not included in the VTAM network.

Operator Response: Save the system log and print the major node definition for problem determination.

Programmer Response: Correct the duplicate names within the major node, and if the major node is the NCP, then also regenerate the NCP. Deactivate the major node containing the node that caused the failure.

IST336I THIS NCP MAJOR NODE WAS *action*

Explanation: VTAM issues this message in response to a DISPLAY ID command for an NCP major node that VTAM has acquired.

action is one of the following:

- **ACQUIRED BEFORE ACTIVATION**

  This indicates that the NCP major node was acquired before being activated.
- **ACTIVATED BEFORE ACQUISITION**

  This indicates that the NCP major node was activated before being acquired.

System Action: Processing continues.

Operator Response: None.

Programmer Response: None.

IST339I CONFIG *configname* **BYPASSED —** *minornode* **UNKNOWN TO THE NCP**

Explanation: VTAM did not include the major node *configname* in the network configuration because *minornode* was unknown to the NCP. The NCP generation was probably not completed. VTAM issues this message when it cannot find a resource resolution table (RRT) extension or when an entry fails to meet DR ADD requirements.

System Action: VTAM did not add major node *configname* to the VTAM network.

Operator Response: Save the system log for problem determination.

Programmer Response: Rerun the NCP generation, ensuring that it runs to completion. You might need to include the LUDRPOOL macro in the NCP generation. See the *NCP Generation and Loading Guide* for more information.

IST348I UNABLE TO PROCESS DISCONNECTION FOR PU = *puname* **DUE TO LACK OF STORAGE**

Explanation: VTAM issues this message when the disconnection of physical unit *puname* failed because of lack of storage.

System Action: Processing continues.

Operator Response: Enter a VARY INACT,TYPE=FORCE command for *puname*. If you have frequent command failures because of insufficient storage, enter the DISPLAY BFRUSE command. Enter the DISPLAY STORUSE command to display storage usage for storage pools. Save the system log and dump for problem determination.

Programmer Response: Verify that the operator entered the buffer pool or CSA start options as specified in the start procedures.

Increase storage as required. For insufficient storage errors, you might want to redefine your buffer pool or CSA limits. If the start option cannot be modified using the MODIFY VTAMOPTS command, you must modify the VTAM start options file (ATCSTRxx) and restart VTAM to use the start option.

- See the *z/OS Communications Server: SNA Migration* to determine the storage requirements for VTAM.
- See the *z/OS Communications Server: SNA Resource Definition Reference* for a description of VTAM start options.
- See the *z/OS Communications Server: SNA Operation* for information about the DISPLAY BFRUSE Command, the DISPLAY STORUSE Command, and the MODIFY VTAMOPTS Command.
- See the *z/OS Communications Server: SNA Network Implementation Guide* for an explanation and description of buffer pools and for general information on buffer pool specification and allocation.
- See the *z/OS Communications Server: SNA Diagnosis Vol 2, FFST Dumps and the VIT* for information about analyzing dumps and about analyzing storage using the VIT analysis tool, if external trace is active.

IST350I DISPLAY TYPE = *type*

Explanation: This message is part of several different message groups and subgroups that VTAM issues in response to a DISPLAY command.

This message serves as a header message for the display and identifies the type of information shown in the display. The message group contains further identification and status information.

type is the type of information or resource being displayed and can be one of the following:

ADJACENT CLUSTER TABLE
The display contains the adjacent subnetwork routing list for the specified network ID and the status of each border node in the list.

ADJACENT CONTROL POINT
The display contains the attributes of a specific adjacent control point node definition and the connections that are assigned to it.

ADJACENT SSCP TABLE
The display contains a list of adjacent SSCPs used for routing session initiation requests.

APPL MAJ NODES/NAMES
The display contains the name and status of all active application program major nodes in the domain and the application programs contained in those nodes.

IST350I

APPN COS
The display contains a list of APPN class-of-service (COS) entries and the name of the last APPNCOS table that was used to create or update the COS entry .

APPNTOSA
The display shows the corresponding APPN and subarea class-of-service (COS) mappings.

BLOCKED VIRTUAL ROUTES
The display shows the blocked Virtual Routes.

BNCOSMAP
The display shows the corresponding nonnative and native class-of-service (COS) names.

BUFFER POOL DATA
The display describes VTAM buffer storage usage.

CDRMS
The display contains the status of cross-domain resource managers known to this host processor.

CDRSCS
The display contains the status of cross-domain resources known to this domain.

CLUSTERS/PHYS UNITS
The display contains the name and status of physical units in the domain.

DIRECTORY
The display contains directory services information about resources.

DLURS
The display contains the dependent LU requesters (DLURs) that are supported by the dependent LU server (DLUS) and their CPSVRMGR session pipe status. The CPSVRMGR pipe consists of two LU 6.2 sessions, a contention winner (conwinner) and a contention loser (conloser). The status of both sessions is displayed.

EXIT
The display contains the name and status of user-written exit routines.

GENERIC AFFINITY
The display contains information about generic resource affinities in the generic resource coupling facility structure.

GROUPS
The display contains the name and status of each group in the domain.

HELD VIRTUAL ROUTES
The display shows the Held Virtual Routes.

LINES
The display contains the name and status of lines in the domain.

LOGICAL UNITS/TERMS
The display contains the name and status of logical units in the domain.

LUGROUP MAJOR NODES
The display contains the names of all LUGROUP major nodes in the domain.

MAJOR NODES
The display contains the status of all active major nodes in the domain.

MODELS
The display contains the name of model major nodes in the domain and the model minor nodes contained in those nodes.

NETWORK NODE SERVER LIST
The display contains the names of all the network nodes currently allowed to act as network node server for this end node.

NETWORK SEARCH
The display contains the results of an operator-initiated search for a specified resource name.

PATH TABLE CONTENTS
The display contains a listing of paths defined to this host processor.

PENDING
The display contains the names of all nodes in a pending state.

RSCLIST
The display contains information about resources whose names match a particular pattern.

SAMAP TABLE
The display shows the mapping of a desired session path through a composite network node (CNN) environment. The table can be used to specify the desired session path through other CNNs in the network if the subarea numbers are unique across all of the CNNs within the APPN subnetwork.

SATOAPPN
The display shows the corresponding SA and APPNCOS mappings.

SESSIONS
The display contains a count of all queued, pending, and active sessions in the domain. The display might also contain the status and partner names for each session in the domain.

SNSFILTR
The display contains user-specified sense codes.

SRCHINFO
The display contains outstanding search request information.

STATIONS
The display contains the name and status of link stations in the domain.

STATS,TYPE=CFS
The display contains the current statistics for the coupling facility structure.

STATS,TYPE=COMPRESS
The display contains compression levels and the number of half-sessions (one end of a session) using that level of compression on input or output session traffic.

STATS,TYPE=VTAM
The display contains VTAM storage estimates statistics in response to the DISPLAY STATS command.

STORAGE USAGE
The display describes VTAM utilization of storage pools and data spaces.

SUBAREA COS
The display contains the class-of-service (COS) table name for a particular network or all networks associated with a specified PU type 4 or 5.

TGPS
The display contains the currently defined transmission group profiles by name, along with the transmission group characteristics they represent.

TNSTAT
The display contains the settings of both global and TRLE group tuning statistics, as well as whether the tuning statistics reports are being displayed at the system console and the tuning statistics reporting interval. The display will also indicate if SMF is unavailable.

TOPOLOGY
The display contains topology information that can be used for problem determination and network verification purposes. It provides information such as link outages, unacceptable routing nodes or links, and node connectivity.

TRACES,TYPE=CNM
The display contains the status of the CNM buffer trace. CNM buffer traces are PDPIUBUF (Problem Determination PIU buffer) and SAWBUF (Session Awareness buffer).

TRACES,TYPE=MODULE
The display contains information about module tracing.

TRACES,TYPE=NODES
The display contains the status of the BUF, GPT, IO, LINE, SIT, and TG trace for a particular resource and its subordinate nodes.

TRACES,TYPE=STATE
The display contains information about resource state tracing, for example, which types of resources are being traced.

TRACES,TYPE=SMS
The display contains the status of the SMS buffer trace.

TRACES,TYPE=TSO
The display contains the status of the TSO trace for one or more TSO user IDs.

TRACES,TYPE=VTAM
The display contains the status of the VTAM internal trace.

TRL
The display contains the status and data link control of each element in the active transport resource list.

USERVAR
The display contains the name and status of all USERVARs in the domain.

VTAMSTOR
The display contains the storage contents associated with VTAM modules and resources.

System Action: Processing continues.

Operator Response: None.

Programmer Response: None.

IST351I LOCAL 3270 MAJOR NODE = *majornode*

Explanation: This message is part of a group of messages that VTAM issues in response to a DISPLAY TERMS command. This message identifies the local non-SNA 3270 major node *majornode* to which the logical units listed in subsequent messages in the display belong. This message may be followed by message IST089I.

System Action: Processing continues.

Operator Response: None.

Programmer Response: None.

IST352I LOCAL SNA MAJOR NODE = *majornode*

Explanation: This message is part of a group of messages that VTAM issues in the following situations:

- In response to a DISPLAY TERMS command. *majornode* is the local SNA major node (local cluster controller) to which the physical units and logical units listed in subsequent messages are attached. Subsequent messages list *majornode*'s subnodes.
- When a connection request has been rejected for resource *nodename* in message IST680I. *majornode* is the local SNA major node (local cluster controller). See the description of message IST680I for more information.

System Action: Processing continues.

Operator Response: None.

Programmer Response: None.

IST353I SWITCHED SNA MAJOR NODE = *majornode*

Explanation: This message is part of a group of messages that VTAM issues in response to a DISPLAY TERMS command. *majornode* is the switched SNA major node to which the physical units and logical units listed in subsequent messages are attached.

System Action: Processing continues.

Operator Response: None.

Programmer Response: None.

IST354I PU T4/5 MAJOR NODE = *majornode*

Explanation: This message is part of a group of messages that VTAM issues in response to a DISPLAY command for COS, LINES, or TERMS, or for a DISPLAY ID command which has a group name specified.

For a DISPLAY COS command, *majornode* is the PU type 4 or 5 major node that subsequently listed class-of-service information, lines, physical units, and logical units are associated with.

For a DISPLAY TERMS command, *majornode* is the PU type 4 or 5 major node that subsequently listed lines, physical units, and logical units are associated with.

For a DISPLAY LINES command, *majornode* is the channel-attached PU type 4 or 5 major node that subsequently listed lines are associated with.

For a DISPLAY ID command which specifies a group name, *majornode* is the PU type 4 or 5 major node that the group is defined in.

System Action: Processing continues.

Operator Response: None.

Programmer Response: None.

IST355I LOGICAL UNITS:

Explanation: This message is part of a group of messages that VTAM issues in response to a DISPLAY command. This message indicates that the nodes listed in subsequent messages are logical units.

System Action: Processing continues.

Operator Response: None.

Programmer Response: None.

IST356I *bpid***[Q] [F]** *bufsize curtot curavail maxtot maxused times exp/cont incr*

Explanation: VTAM issues this message as part of a message group in response to a DISPLAY BFRUSE,BUFFER=SHORT command. See message IST632I for a complete description of the message group.

IST359I ATTACHMENT = *linetype*

Explanation: This message is part of a group of messages that VTAM issues in response to a DISPLAY TERMS command. This message indicates the type of line that connects one node to another.

linetype can be **LEASED** or **SWITCHED**.

System Action: Processing continues.

Operator Response: None.

Programmer Response: None.

IST360I APPLICATIONS:

Explanation: This message is issued in response to a DISPLAY APPLS or DISPLAY ID command for an application major node only. The message indicates that the nodes in subsequent messages are application program nodes.

System Action: Processing continues.

Operator Response: None.

Programmer Response: None.

IST361A *nodename/subarea* **FOUND LOADED WITH** *loadmodname/subarea* **REPLY 'YES' TO RELOAD OR 'NO' TO CANCEL ACTIVATION**

Explanation: While processing a VARY ACT command, VTAM found the specified *nodename* and *subarea* already loaded with NCP load module *loadmodname* or already defined for *subarea*. If the load module is not known, VTAM displays ***NA*** for *loadmodname*.

VFYLM=YES was specified on the NCP's PCCU definition statement. The operator may therefore decide to reload the specified communication controller or terminate the activation.

Note: VTAM continues to issue message IST361A until you enter a correct response.

System Action: Processing continues.

Operator Response: Reply 'YES' if you want to reload the communication controller. Other VTAMs sharing the communication controller will be affected when you reload.

Reply 'NO' if you want to stop the activation of the communication controller. This will result in a load module mismatch between the load module that is active for this VTAM and the load module that is active for another VTAM which is sharing the same communication controller.

Programmer Response: None.

Note: For additional information on how to respond to this message, see "Responding to a VTAM message" on page 2.

IST362I **GROUP** *groupname* **DEVICES UNAVAILABLE — MISSING SYSCNTRL OPTION**

Explanation: While activating a BSC or start-stop group, *groupname*, VTAM found the RIMM or MODE option to be missing on the SYSCNTRL definition statement.

Note: The BHSASSC option might be required on the SYSCNTRL definition statement if you are using block handlers. (You specified BHSET in the GROUP definition statement.)

System Action: VTAM does not include the BSC or start-stop group *groupname* in the network.

Operator Response: Save the system log for problem determination.

Programmer Response: Specify the required SYSCNTRL options. See the *z/OS Communications Server: SNA Resource Definition Reference* for more information on the SYSCNTRL options.

IST363I **CONFIG** *configname* **NODES AND SUBNODES SET UNAVAILABLE —** *reason*

Explanation: While activating configuration *configname*, VTAM detected an error in an NCP generation definition statement or a VTAM definition statement.

reason can be one of the following:

DUPLICATE MACRO
DUPLICATE VALUE
INVALID NAME
INVALID PARAMETER
INVALID VALUE
MISSING MACRO
MISSING NAME
MISSING PARAMETER
PARAMETER CONFLICT
REPEATED VALUE
SEQUENCE ERROR
SYNTAX ERROR

A second message, IST323I, provides details of the definition statement in error.

System Action: VTAM continues processing the macro or definition statement. Message IST323I provides the name of the node that is unavailable. The subnodes of this node are also unavailable.

Operator Response: Save the system log for problem determination.

Programmer Response: Correct the macro or statement in error.

- If the error is in an NCP generation definition statement, regenerate the NCP after correcting the error.
- If the error is in a VTAM definition statement, update the VTAM definition library to correct the definition of configuration *configname*.

IST366I CONFIG *configname* **UNABLE TO DEFINE** *nodename* **— MAXIMUM NUMBER OF NETWORK ADDRESSES FOR HOST SUBAREA EXCEEDED**

Explanation: While activating configuration *configname*, VTAM exceeded the maximum number of network addresses in the host subarea. VTAM cannot define a new element in the host subarea. If an Enterprise Extender (EE) line or PU was being activated, the request exceeded the limit of 16 776 960 extended element addresses. Therefore, VTAM failed to define a new network address for the EE line or PU.

System Action: If *nodename* is all asterisks, the activation of *configname* fails. VTAM did not assign an element address to nodes within the major node definition.

If *nodename* is not all asterisks, the activation of *configname* continues and the node identified by *nodename* is marked invalid and is unusable in the VTAM network.

Operator Response: Deactivate any unneeded segment in the host subarea to free network addresses, and deactivate and then activate *configname*. If VTAM continues to issue this message, save the system log for problem determination.

Programmer Response: Check the output provided by the operator to ensure that all requirements for VTAM are correct for your system.

Since the maximum number of elements that can be assigned by VTAM within the host subarea has been reached, examine the possibility of allocating devices and applications to other subareas.

To use higher-order element addresses for LUs, you may want to specify YES for the ENHADDR start option. You must modify the start options file (ATCSTRxx) and restart VTAM to use the start option. For more information, refer to the *z/OS Communications Server: SNA Network Implementation Guide*.

IST367I NO STORAGE TO DEFINE NODE *nodename* **CONFIG** *configname*

Explanation: VTAM did not have sufficient storage to define node *nodename*.

System Action:

- If *nodename* is all asterisks, the activation of *configname* fails. VTAM did not assign an element address to nodes within the major node definition.
- If *nodename* is not all asterisks, the activation of *configname* continues, and *nodename* is unusable as it was defined in *configname*.
  - If *nodename* did not previously exist, it is unavailable to the VTAM network.
  - If *nodename* did previously exist (for example, as an independent LU), then the existing node is not affected by the definition that failed.

Operator Response: ***If VTAM has been initialized***, deactivate any active segment in the host subarea that is not needed to free network addresses. After you dactivate any active segment in the host subarea that is not needed to free network addresses, deactivate and activate *configname*. If VTAM continues to issue this message, enter the DISPLAY BFRUSE command. Enter the DISPLAY STORUSE command to display storage usage for storage pools. Save the system log and dump for problem determination.

Programmer Response: Do one of the following:

- Check the output provided by the operator to ensure that all requirements for VTAM are correct for your system. Determine if any major nodes can be deleted from the configuration so that more storage is available.
- Increase storage as required. For insufficient storage errors, you might want to redefine your buffer pool or CSA limits. If the start option cannot be modified using the MODIFY VTAMOPTS command, you must modify the VTAM start options file (ATCSTRxx) and restart VTAM to use the start option.

- See the *z/OS Communications Server: SNA Migration* to determine the storage requirements for VTAM.
- See the *z/OS Communications Server: SNA Resource Definition Reference* for a description of VTAM start options.
- See the *z/OS Communications Server: SNA Operation* for information about the DISPLAY BFRUSE Command, the DISPLAY STORUSE Command, and the MODIFY VTAMOPTS Command.
- See the *z/OS Communications Server: SNA Network Implementation Guide* for an explanation and description of buffer pools and for general information on buffer pool specification and allocation.
- See the *z/OS Communications Server: SNA Diagnosis Vol 2, FFST Dumps and the VIT* for information about analyzing dumps and about analyzing storage using the VIT analysis tool, if external trace is active.

IST368I FUNCTION GROUP *functiongroup* **FAILED**

Explanation: VTAM issues this message as part of a message group. The first message in the group is IST886I or IST1277I. See the explanation of the first message in the group for a complete description.

IST380I ERROR FOR ID = *nodename* **— REQUEST:** *runame***, SENSE:** *code*

Explanation: VTAM issues this message when the request *runame* for the resource *nodename* failed.

code is the sense code and indicates the reason for the failure. See the *z/OS Communications Server: IP and SNA Codes* for a description of *code*.

runame is the name of the request that failed. See Chapter 14, “Command and RU types in VTAM messages” on page 685 for a description of *runame*.

System Action: VTAM does not perform the request *runame*.

When VTAM receives a failing activation request for RUs such as ACTLINK, CONTACT, ACTLU, or ACTPU, VTAM usually deactivates the resource and all subordinate resources, regardless of whether the resource was being activated or deactivated.

Operator Response:

- Attempt to activate or trace the node again.
- If a failure still occurs, save the system log for problem determination.
- If VTAM issues this message repeatedly, disable the line and save the system log for problem determination.
- If *code* indicates a storage problem, wait a short time and reenter the command. If VTAM continues to issue this message, enter the DISPLAY BFRUSE command to display storage used by VTAM buffer pools and information about the common service area (CSA). Message IST981I displays total VTAM private storage information. Enter the DISPLAY STORUSE command to display storage usage for storage pools.

  Save the system log and request a dump for problem determination.
- **Sense Code 081C***nnnn*

  Correct the cause indicated by the user portion of the sense code (*nnnn*), and retry the command.

  Note: Only some of the possible sense codes issued in this message are described here. For a complete description of the sense codes, see the *z/OS Communications Server: IP and SNA Codes*.

Programmer Response:

- If *code* indicates a storage problem, increase storage as required. For insufficient storage errors, you might want to redefine your buffer pool or CSA start options. If the start option cannot be modified using the MODIFY VTAMOPTS command, you must modify the VTAM start options file (ATCSTRxx) and restart VTAM to use the start option.
  - See the *z/OS Communications Server: SNA Migration* to determine the storage requirements for VTAM.
  - See the *z/OS Communications Server: SNA Resource Definition Reference* for a description of VTAM start options.
  - See the *z/OS Communications Server: SNA Operation* for information about the DISPLAY BFRUSE Command, the DISPLAY STORUSE Command, and the MODIFY VTAMOPTS Command.
  - See the *z/OS Communications Server: SNA Network Implementation Guide* for an explanation and description of buffer pools and for general information on buffer pool specification and allocation.
  - See the *z/OS Communications Server: SNA Diagnosis Vol 2, FFST Dumps and the VIT* for information about analyzing dumps and about analyzing storage using the VIT analysis tool, if external trace is active.

- **Sense Code 081C***nnnn*

  If an ACTLINK request failed on a VARY ACT request with the sense code of **081C***nnnn*, check the CUADDR operand of the PU (local SNA) or PCCU definition statement to make sure that the correct device address was specified for the node *nodename*.

  If sense code 081C0010 is received and message IST1386I is issued, refer to the return code and reason code in IST1386I to determine the cause of the failure.
- **Sense Code 08A30001**

  If VTAM issues sense code 08A30001 repeatedly, determine the subarea node that is attempting to establish a switched connection. If the SSCP is authorized to request that connection, verify that both SSCPs have identical PRTCT operands coded for their PU statements on the switched major nodes. Also verify that both nodes and their SSCPs are of a level that supports call security verification.

  VTAM might issue this message with sense code 08A30001 because an unauthorized subarea node is attempting to establish a switched connection to the host that received the message.
- You might need to include the LUDRPOOL macro in the NCP generation.
- Make sure that the device is available to the system and that there are no hardware problems.

IST381I *command* **FOR ID =** *nodename* **FAILED – CANNOT DEFINE NODE**

Explanation: VTAM stopped processing *command*. VTAM could not define the resource *nodename* for one of the following reasons:

- *nodename* has the same name as another resource in this domain.
- *nodename* has the same network address as another resource in this domain.
- The value for VNNAME for *nodename* matches the value for CPNAME on a PU in this domain.
- The value for VNNAME for *nodename* refers to an ADJCP for which VN=YES is not specified.

command is the command that failed. See Chapter 14, “Command and RU types in VTAM messages” on page 685 for a description of *command*.

nodename is the name of the resource specified on the command.

System Action: VTAM rejects the command.

Operator Response: Display *nodename*:

- If the resource already exists, *command* failed because the resource was already defined.
- If *nodename* is a communication controller, enter a DISPLAY STATIONS command.
- If the subarea of *nodename* is listed as an adjacent subarea in the display, another communication controller has been defined for that subarea. The communication controller might still exist if the link to that subarea is still active. To correct the problem, enter a VARY INACT command for the link to the adjacent subarea.
- If the resource does not exist, display VNNAME. If VNNAME already exists, *command* failed because the VNNAME was already defined with a different nodetype.

Save the system log for problem determination.

Programmer Response: Ensure that *nodename* has a unique name, unique network address, or unique VNNAME. Refer to the *z/OS Communications Server: SNA Resource Definition Reference* for more information on VNNAME definitions.

IST382I *command* **FOR ID =** *nodename* **FAILED — STATE:** *state* **NOT VALID FOR REQUEST**

Explanation: VTAM rejected *command* because *nodename* was not in a state that is valid for the request.

See Chapter 14, “Command and RU types in VTAM messages” on page 685 for a description of *command*. See the *z/OS Communications Server: IP and SNA Codes* for a description of *state*.

System Action: VTAM rejects the command.

Operator Response: Use the DISPLAY ID command to monitor the progress of *nodename*. When processing is completed, enter the commands required to obtain the network configuration or device state required.

Programmer Response: None.

IST383I DEACTIVATION OF ID = *nodename* **FAILED — REQUEST:** *request* **SENSE:** *code*

Explanation: VTAM cannot complete deactivation of *nodename* because *request* has failed with a sense code of *code*.

See Chapter 14, “Command and RU types in VTAM messages” on page 685 for a description of *request*.

See the *z/OS Communications Server: IP and SNA Codes* for a description of *code*.

System Action: VARY deactivate processing for *nodename* is pending. The node is not available to VTAM.

Operator Response: Enter a VARY INACT,TYPE=FORCE command to deactivate the node. If the problem persists, save the system log for problem determination.

Programmer Response: Use the output provided and the description of *code* to assist in determining the cause of the problem.

IST384I *command* **FOR ID =** *nodename* **FAILED**

Explanation: VTAM issues this message when processing of the *command* for *nodename* failed. For example, a deactivate command failed because no storage was available to continue.

nodename is the name of the resource and is either an NCP or logical unit (LU).

System Action: VTAM rejects the command.

Operator Response:

- If message IST383I or IST1268I precedes this message, enter a VARY INACT,TYPE=FORCE command to deactivate the resource.
- If this is a storage problem, messages IST561I, IST562I, IST563I, IST564I, IST565I or IST566I may be issued prior to this message to indicate the type of storage affected.

  If message IST467I is displayed with contacted error type 5, see the programmer response of that message for additional information.

  Enter the DISPLAY BFRUSE command to display storage used by VTAM buffer pools and information about the common service area (CSA). Total VTAM private storage information is also displayed in message IST981I. Enter the DISPLAY STORUSE command to display storage usage for storage pools.

  Save the system log and request a dump for problem determination.

Programmer Response: For a storage problem, verify that the operator entered the buffer pool or CSA start options as specified in the start procedures.

Increase storage as required. For insufficient storage errors, you might want to redefine your buffer pool or CSA start options. If the start option cannot be modified using the MODIFY VTAMOPTS command, you must modify the VTAM start options file (ATCSTRxx), and restart VTAM to use the start option.

See *z/OS Communications Server: SNA Operation* for more information on the DISPLAY BFRUSE, DISPLAY STORUSE, and MODIFY VTAMOPTS commands. The *z/OS Communications Server: SNA Diagnosis Vol 1, Techniques and Procedures* provides additional information.

See the *z/OS Communications Server: SNA Diagnosis Vol 2, FFST Dumps and the VIT* for information about analyzing dumps and about analyzing storage using the VIT analysis tool, if external trace is active.

IST388I DYNAMIC CDRSC DEFINITION SUPPORT = {YES|NO}

Explanation: VTAM issues this message in response to a DISPLAY ID command for a host cross-domain resource manager. This message indicates whether the named host will process session initialization requests from cross-domain resources that are not explicitly defined to the host. If you specified CDRDYN=YES on the host CDRM definition statement, the host will support sessions for dynamically defined resources.

A value of **YES** in this message combined with a value of **OPT** in message IST389I means that VTAM will build a dynamic CDRSC entry if necessary.

System Action: Processing continues.

Operator Response: None.

Programmer Response: None.

IST389I PREDEFINITION OF CDRSC = {OPT|REQ}

Explanation: VTAM issues this message in response to a DISPLAY ID command for an external CDRM. It indicates whether explicit definition of the CDRM's CDRSCs is optional or required.

A value of **OPT** in this message combined with a value of **YES** in message IST388I means that VTAM will build a dynamic CDRSC entry, if necessary, when it initiates a session.

System Action: Processing continues.

Operator Response: None.

Programmer Response: None.

IST391I ADJ LINK STATION = *linkstation*, **LINE =** *linkname*, **NODE =** *majornode*

Explanation: This message is part of the output from a DISPLAY ID command entered for a PU type 4 (NCP) major node. This message describes the attachment of the displayed NCP.

linkstation is the adjacent link station.

linkname is the connecting link.

majornode is the major node that the link is defined in. For a leased station, *majornode* is also the major node that the link station is defined in.

linkname and *majornode* will be *****NA***** if the link station is not defined in an active major node.

System Action: Processing continues.

Operator Response: None.

Programmer Response: None.

IST393I PU T4/5 MAJOR NODE *majornode*, **SUBAREA =** *subarea*

Explanation: This message is part of a group of messages that VTAM issues in response to a DISPLAY STATIONS command. It identifies a PU type 4 (NCP) major node *majornode* or a PU type 5 (host) major node *majornode* for which associated link stations will subsequently be listed. *subarea* is the subarea address of *majornode*.

System Action: Processing continues.

Operator Response: None.

Programmer Response: None.

IST394I ADJACENT LINK STATIONS NOT OWNED BUT AWAITING ACTIVATION

Explanation: This message is part of a group of messages that VTAM issues in response to a DISPLAY STATIONS command. This message serves as a heading for message IST395I, which will appear as many times as necessary.

System Action: Processing continues.

Operator Response: None.

Programmer Response: None.

IST395I *linkstation1 linkstation2 linkstation3 linkstation4 linkstation5 linkstation6*

Explanation: This message is part of a group of messages that VTAM issues in response to a DISPLAY STATIONS command. It lists, for a given PU type 4 or PU type 5 major node, the unowned adjacent link stations that are awaiting activation. Each variable *linkstation* represents an adjacent link station.

System Action: Processing continues.

Operator Response: None.

Programmer Response: None.

IST396I LNKSTA STATUS CTG GTG ADJNODE ADJSA NETID ADJLS

Explanation: VTAM issues this message as part of a group of messages in response to the following commands:

DISPLAY ID command for a link station and the associated line
Shows the link station and the associated line.

DISPLAY ID command for a line that has one or more associated link stations
Message IST397I is issued for each link station associated with the line. Message IST610I is not issued.

DISPLAY STATIONS command
Shows all of the link stations in each PU type 4 and PU type 5 major node. Messages IST397I and IST610I are repeated for each link station line pair. Message IST610I displays the line name *linename* and its status *linestatus*.

A complete description of the message group follows.

```
 IST396I LNKSTA   STATUS     CTG GTG  ADJNODE ADJSA    NETID    ADJLS
 IST397I linkstation status  ctg gtg  adjnode adjsa    netid    adjls
[IST610I                          LINE linename -  STATUS linestatus]
```

The following fields are displayed in the messages:

linkstation
Link station name.

status Link station status. See the *z/OS Communications Server: IP and SNA Codes* for a description of *status*.

ctg Current transmission group.

gtg Generated transmission group.

adjnode
Adjacent PU type 4 or 5, if available. (This is blank if this is a migration NCP or a VTAM to VTAM connection.)

adjsa Subarea associated with adjacent PU type 4 or 5. (This is **0** if not known.)

netid The name of the network of the associated PU type 4 or 5.

adjls The name of the adjacent link station if known.

linename
Line name (associated with link station).

linestatus
Status of line *linename*. See the *z/OS Communications Server: IP and SNA Codes* for a description of *status*.

System Action: Processing continues.

Operator Response: None.

Programmer Response: None.

IST397I *linkstation status ctg gtg adjnode adjsa netid adjls*

Explanation: VTAM issues this message as part of a group of messages in response to a DISPLAY command. See the explanation of message IST396I for a complete description of the group.

See the *z/OS Communications Server: IP and SNA Codes* for a description of *status*.

IST398I LOAD OF *controller* **FAILED —** *loadmodname* **HAS ZERO ENTRY POINT**

Explanation: The NCP load module *loadmodname* was generated without a valid entry point. Zero was assumed during the last load of communication controller *controller*.

System Action: VTAM neither loads *controller* nor activates *loadmodname*.

Operator Response: Save the system log for problem determination.

Programmer Response: Regenerate the NCP with the correct entry point.

IST399E ISTSDCOS IS NOT A CLASS OF SERVICE TABLE — ISTSDCOS DELETED

Explanation: VTAM loaded table ISTSDCOS but determined that the named table was not a class-of-service (COS) table.

System Action: VTAM deletes ISTSDCOS and initialization continues. Since the COS table does not exist, any session initiation requests that require a COS name other than ISTVTCOS or blank (for which defaults are provided) will fail.

Operator Response: You can issue the DISPLAY COS,ID=ISTPUS to determine whether VTAM has loaded ISTSDCOS. If VTAM has not loaded ISTSDCOS, you can issue the MODIFY TABLE command to load it.

Save the system log for problem determination.

Programmer Response: ISTSDCOS is the name reserved for the user-written class-of-service table. You must create ISTSDCOS using the COSTAB, COS, and COSEND macros to create a valid COS table. If you desire a COS table, assemble a valid version of ISTSDCOS, and reload the result into the system library. See the *z/OS Communications Server: SNA Resource Definition Reference* for more information.

Chapter 6. IST messages for VTAM network operators IST400I – IST799I

This chapter lists the VTAM messages beginning with IST in the range of IST400I through IST799I. These messages can appear on a network operator's console.

See Appendix E, "Message text for VTAM operator messages" on page 769 for a list of the text of all VTAM operator messages.

Note: Messages that begin with the prefix **ISTF** are issued by the VTAM dump analysis tool and the VTAM internal trace (VIT) analysis tool. Help information is available as a part of each tool by pressing F1. Therefore, **ISTF** messages are not documented in *z/OS Communications Server: SNA Messages*. See *z/OS Communications Server: SNA Diagnosis Vol 1, Techniques and Procedures* for additional information.

IST400I TERMINATION IN PROGRESS FOR APPLID *applname*

Explanation: The VTAM termination task is about to close the ACB of VTAM application ACBNAME with the *applname*, which has terminated (either normally or abnormally).

applname is the ACBNAME if ACBNAME is coded in the APPL definition. If ACBNAME is not coded, *applname* is the NAME as coded on the APPL definition statement.

System Action: Processing continues.

Operator Response: Any attempts to reopen the ACB for *applname* before VTAM issues message IST805I will fail. If you do not see message IST805I, save the system log for problem determination.

Programmer Response: See the *z/OS Communications Server: SNA Diagnosis Vol 1, Techniques and Procedures* for more information on diagnosing VTAM problems.

IST401I *command* **INITIATED FOR ID =** *nodename*

Explanation: VTAM has successfully started the *command* for resource *nodename*.

See Chapter 14, "Command and RU types in VTAM messages" on page 685 for a description of *command*.

System Action: Processing continues.

Operator Response: None.

Programmer Response: None.

IST403I *command* **COMMAND FAILED — MULTIPLE OPTIONS FOR** *operand_name* **NOT ALLOWED**

Explanation: The *command* failed because VTAM does not accept multiple values for operand *operand_name*.

System Action: VTAM rejects the command. Other processing continues. If *command* is **START**, VTAM prompts the operator for corrections. Processing continues.

Operator Response: Reenter the command, and specify only one option for *command*. See the *z/OS Communications Server: SNA Resource Definition Reference* for the format of the VTAM start options.

Programmer Response: None.

IST407I MODIFY ATTACH FAILED — *subtask* **ALREADY ATTACHED**

Explanation: The operator issued a MODIFY SUBTASK command to attach a subtask such as TPRINT, the batch transfer program, or the subsystem support services. The command failed because the *subtask* was already attached.

System Action: VTAM rejects the command.

© Copyright IBM Corp. 1984, 2002

Operator Response: None.

Programmer Response: None.

IST408I MODIFY DETACH FAILED — *subtask* NOT ATTACHED

Explanation: The operator issued a MODIFY SUBTASK command to detach a subtask such as TPRINT, the batch transfer program, or the subsystem support services. The command failed because the *subtask* was not attached.

System Action: VTAM rejects the command.

Operator Response: None.

Programmer Response: None.

IST410I *bp* BUFFER POOL COULD NOT BE BUILT — CODE *code*

Explanation: VTAM could not build the *bp* buffer pool.

bp is the name of the buffer pool. See the *z/OS Communications Server: SNA Network Implementation Guide* for an explanation and description of buffer pools and for general information on buffer pool specification and allocation.

code indicates the reason for the failure and can be one of the following:

1 Not enough common service area (CSA) storage was available for the buffer pool.

2 Pages could not be fixed in storage.

3 Building the pool would exceed the CSALIMIT or CSA24 limit.

System Action: VTAM start processing fails. VTAM is terminated.

Operator Response: Save the system log and request a dump for problem determination.

Programmer Response: Increase storage as required. For insufficient storage errors, you might want to redefine your buffer pool or CSA start options by modifying the VTAM start options file (ATCSTRxx) before restarting VTAM.

See the *z/OS Communications Server: SNA Diagnosis Vol 2, FFST Dumps and the VIT* for information about analyzing dumps and about analyzing storage using the VIT analysis tool, if external trace is active.

IST411I *command* COMMAND REJECTED DUE TO TERMINATION IN PROGRESS

Explanation: VTAM rejected the *command* because termination is in progress.

System Action: VTAM termination processing continues.

Operator Response: If you did not halt VTAM, have the system log available for problem determination action.

Programmer Response: If VTAM was not halted by issuing the HALT command, use the system log to help you determine why HALT was in progress.

IST412I VTAM COMMAND PROCESSING TERMINATED

Explanation: VTAM is in the process of terminating, and rejects any commands that are entered during termination.

System Action: VTAM termination processing continues.

Operator Response: None.

Programmer Response: None.

IST413I VTAM DUMPING FOR JOB *jobname* STEP *stepname*

Explanation: VTAM has encountered a problem with the indicated job *jobname* and step *stepname*. The system will attempt an SDUMP.

System Action: Processing continues. VTAM takes a dump if the system dump data set is usable at this time. If VTAM successfully initiates the SDUMP, the performance for other jobs may be degraded until VTAM completes the SDUMP.

Operator Response: Save the system log and the contents of the SDUMP for problem determination.

Programmer Response: Review the contents of the SDUMP to determine the correct problem determination action. If the SVC dump failed, message IST257I might have been issued and can be found in the system or network log. If no SVC dump was written to a dump dataset, check the system log for write to operator with reply (WTOR) system message IEA793A. The message indicates that no dump datasets are available and that MVS dump services is waiting for operator action to free up a dump dataset.

IST414I *command* **FOR ID =** *nodename* **FAILED — PROCESS UNAVAILABLE**

Explanation: VTAM issues this message when the *command* failed because *nodename* is not active. See Chapter 14, "Command and RU types in VTAM messages" on page 685 for a description of *command*.

Either of the following conditions may have occurred.

- A forced deactivate command was entered for *nodename*, and the resource is already inactive.
- A forced reactivate command was entered for *nodename*. The resource is being activated, but the activate processing has not proceeded far enough.

System Action: VTAM stops processing *command*.

Operator Response: Ensure that you entered the command for the correct node. If so, save the system log for problem determination.

Programmer Response: Use the system log to assist you in correcting the problem. When you have corrected the error condition, ask the operator to reenter the command.

IST416I SDUMP ISSUED DUE TO ADDRESS SPACE TERMINATION

Explanation: An abend has occurred in the VTAM address space.

System Action: The minimum cleanup required for a restart of VTAM will be performed. A dump is taken if the system-dump data set is usable.

Operator Response: Save the system log and dump for problem determination.

Programmer Response: Review the contents of the SDUMP for problem determination.

IST422I I/O ERROR ON DS *datasetname* **RTN CD =** *major*, *minor*

Explanation: An I/O error occurred on the checkpoint data set *datasetname*. *major* and *minor* are major and minor return codes from VSAM.

System Action: VTAM terminates checkpointing.

Operator Response: Save the system log for problem determination.

Programmer Response: This is probably a hardware error. Consult the applicable VSAM documentation for appropriate responses.

If this message is issued with RTNCD=X'0808' and *datasetname* specifies the NODELST dataset or the CONFIGDS dataset, then verify that the VSAM CLUSTER definition is correct. The KEYS parameter of the CLUSTER definition must specify the correct key length as stated in the *z/OS Communications Server: SNA Network Implementation Guide*

IST423I UNABLE TO GET STORAGE FOR DS *name*

Explanation: VSAM was unable to obtain VTAM private storage for the checkpoint data set identified by *name*.

System Action: VTAM terminates checkpointing.

Operator Response: If VTAM has been initialized, wait a short time and reenter the command. If VTAM continues to issue this message, enter the DISPLAY STORUSE command to display storage usage for storage pools. Message IST981I displays total VTAM private storage information. If this message does not appear in the display, you may need to reissue the DISPLAY STORUSE command, specifying a higher value for the NUM operand. See the *z/OS Communications Server: SNA Operation* for additional information. Save the system log and request a dump for problem determination.

If VTAM initialization failed, save the system log for problem determination.

Programmer Response: Check the output provided by the operator to ensure that all requirements for VTAM are correct for your system. Re-evaluate your storage needs for the VTAM address space and increase storage as required. To restart checkpointing, halt and restart VTAM.

See the *z/OS Communications Server: SNA Diagnosis Vol 2, FFST Dumps and the VIT* for information about analyzing dumps and about analyzing storage using the VIT analysis tool, if external trace is active.

IST424I CLOSE FAILED ON DS *name* **RTN CD =** *major*, *minor*

Explanation: The VSAM CLOSE function failed for the major node checkpoint data set or book identified by *name*. The major return code from VSAM (*major*) is register 15. The minor return code from VSAM (*minor*) is ACBERFLG.

System Action: VTAM terminates checkpointing.

Operator Response: Save the system log for problem determination.

Programmer Response: This is probably a hardware error. Consult the applicable VSAM documentation for further appropriate responses.

IST425I OPEN FAILED ON DS *name* **RTN CD =** *major*, *minor*

Explanation: The VSAM OPEN function failed for the major node checkpoint data set or book identified by *name*. The major return code from VSAM (*major*) is register 15. The minor return code from VSAM (*minor*) is ACBERFLG.

System Action: VTAM terminates checkpointing.

Operator Response: Save the system log for problem determination.

Programmer Response: Consult the applicable VSAM documentation for further responses. To avoid this problem, use the VERIFY operation as a regular part of the VTAM start routine to ensure that the data set is properly closed. Consult the applicable VSAM documentation for further appropriate responses.

IST430I *runame* **FOR ID =** *nodename* **DISCARDED**

Explanation: VTAM did not process the *runame* for node *nodename* because there was insufficient storage available to process the recovery of the node.

See Chapter 14, “Command and RU types in VTAM messages” on page 685 for a description of *runame*.

System Action: Node *nodename* may appear active to VTAM, but it cannot process any requests. Any logical units associated with this node are inaccessible.

Operator Response: Enter a DISPLAY ID command for *nodename*. If *nodename* is still active, enter a VARY INACT,TYPE=FORCE command for *nodename* to deactivate the node. Then enter VARY ACT,ID=*nodename* to reactivate it.

If VTAM continues to issue this message, enter the DISPLAY BFRUSE command. Enter the DISPLAY STORUSE command to display storage usage for storage pools. Save the system log and dump for problem determination.

Programmer Response: Verify that the operator entered the buffer pool or CSA start options as specified in the start procedures.

Increase storage as required. For insufficient storage errors, you might want to redefine your buffer pool or CSA limits. If the start option cannot be modified using the MODIFY VTAMOPTS command, you must modify the VTAM start options file (ATCSTRxx) and restart VTAM to use the start option.

- See the *z/OS Communications Server: SNA Migration* to determine the storage requirements for VTAM.
- See the *z/OS Communications Server: SNA Resource Definition Reference* for a description of VTAM start options.
- See the *z/OS Communications Server: SNA Operation* for information about the DISPLAY BFRUSE Command, theDISPLAY STORUSE Command, and the MODIFY VTAMOPTS Command.
- See the *z/OS Communications Server: SNA Network Implementation Guide* for an explanation and description of buffer pools and for general information on buffer pool specification and allocation.
- See the *z/OS Communications Server: SNA Diagnosis Vol 2, FFST Dumps and the VIT* for information about analyzing dumps and about analyzing storage using the VIT analysis tool, if external trace is active.

IST433I COMMAND REJECTED — TUNING STATISTICS TASK NOT ATTACHED

Explanation: VTAM rejected a MODIFY TNSTAT command because tuning statistics support is not part of the system. During VTAM initialization, the attempt to start the tuning statistics subtask failed.

System Action: System processing continues.

Operator Response: Tuning statistics cannot be collected at this time.

Programmer Response: If you want to collect tuning statistics, determine and correct the reason for the failure to start the VTAM tuning statistics subtask.

IST435I UNABLE TO RECORD ON TUNSTATS FILE, RETURN CODE = *code*

Explanation: An error occurred when the tuning statistics subtask, ISTINCTS, tried to open or write to the tuning statistics file.

ISTINCTS, is active in VTAM, but failed to write a tuning statistics record to the system management facility (SMF) data set.

code is a reason code, in decimal, that indicates why the write attempt failed. For explanations of the reason codes, see the return codes from the SMFWTM macro located in the *System Management Facilities (SMF)* manual for your system.

System Action: The tuning statistics record is lost. System processing continues.

Operator Response: Save the system log for problem determination.

Programmer Response: For the appropriate responses to *code*, see the return codes from the SMFWTM macro located in the *System Management Facilities (SMF)* manual for your system.

IST436I STORAGE NOT AVAILABLE FOR TUNING STATISTICS DATA

Explanation: The tuning statistics subtask, ISTINCTS, is active in VTAM, and no storage was available to temporarily store a tuning statistics record.

System Action: VTAM will include the data in the record in the next tuning statistics record. System processing continues.

Operator Response: Wait a short time and reenter the command. If VTAM continues to issue this message, enter the DISPLAY BFRUSE command. Enter the DISPLAY STORUSE command to display storage usage for storage pools. Save the system log and dump for problem determination.

Programmer Response: Verify that the operator entered the buffer pool or CSA start options as specified in the start procedures.

Increase storage as required. For insufficient storage errors, you might want to redefine your buffer pool or CSA limits. If the start option cannot be modified using the MODIFY VTAMOPTS command, you must modify the VTAM start options file (ATCSTRxx) and restart VTAM to use the start option.

- See the *z/OS Communications Server: SNA Migration* to determine the storage requirements for VTAM.
- See the *z/OS Communications Server: SNA Resource Definition Reference* for a description of VTAM start options.
- See the *z/OS Communications Server: SNA Operation* for information about the DISPLAY BFRUSE Command, theDISPLAY STORUSE Command, and the MODIFY VTAMOPTS Command.
- See the *z/OS Communications Server: SNA Network Implementation Guide* for an explanation and description of buffer pools and for general information on buffer pool specification and allocation.
- See the *z/OS Communications Server: SNA Diagnosis Vol 2, FFST Dumps and the VIT* for information about analyzing dumps and about analyzing storage using the VIT analysis tool, if external trace is active.

IST440I TIME = *time* **DATE =** *date* **ID =** *id*

Explanation: This message is the first in a group of messages that displays tuning statistics for a SNA controller. A complete description of the message group follows.

IST440I

```
IST440I    TIME = time         DATE = date         ID = id
IST441I  DLRMAX = dlrmax       CHWR = chwr       CHRD = chrd
IST442I    ATTN = attn        RDATN = rdatn      IPDU = ipdu
IST443I    OPDU = opdu        RDBUF = rdbuf     SLODN = slodn
IST1568I   INLP = inlp         ONLP = onlp      BFNLP = bfnlp
IST314I  END
```

IST440I

time indicates the time (in hours, minutes, seconds, and hundredths of seconds) at which the record is recorded. For example, 07431380 means that the record was recorded at the 7th hour, 43rd minute, 13th second, and 80 one-hundredths of a second of the day.

date is the date on which the tuning statistics report is recorded. The date is in the form *yyddd*, where *yy* is the last two digits of the numeric year and *ddd* is the numeric day of the year. For example, 00190 means the record is recorded on the 190th day of 2000.

id is the name of the user-defined channel-attached SNA cluster controller or the name of the channel link that attaches the communication controller for which the statistics are gathered. For a VTAM-generated channel-link name, this field contains the channel unit address followed by "-L."

IST441I

dlrmax is a decimal value that indicates the maximum number of dump-load-restart requests that were awaiting processing or were being processed at one time during the interval. This number refers to the entire domain, not to the SNA controller named in the report. The dump-load-restart subtask processes the following types of requests:

- Dump, load, or restart of an NCP
- Some VTAM messages to the operator that require a reply
- Session establishment and termination processing for a local major node
- Any I/O to a configuration restart or NODELST file.

This value can be used to determine the proper setting for the DLRTCB start option, which determines how many dump-load-restart requests can be processed concurrently. If DLRMAX consistently exceeds DLRTCB, it indicates that VTAM is serializing requests on the available TCBs and that performance might be affected.

chwr is a decimal value that indicates the total number of write channel programs issued during the interval covered by this record.

chrd is a decimal value that indicates the total number of read channel programs issued to read data. It does not include the read that informs the cluster controller to clear its buffers.

IST442I

attn is a decimal value that indicates the total number of attention interrupts received from a controller, including the total number of READ ATTENTIONs (RDATN).

rdatn is a decimal value that indicates the total number of times that the attention is included in the ending status on a read channel program (that is, the number of times that VTAM, after reading data, is requested with an attention to read more data).

ipdu is a decimal value that indicates the total number of inbound (to VTAM) PDUs received from this controller.

IST443I

opdu is a decimal value that indicates the total number of outbound (from VTAM) PDUs sent to this controller.

rdbuf is a decimal value that indicates the total number of read buffers used.

slodn is a decimal value that indicates the total number of times the controller has entered a slowdown condition; for NCP, this is the number of times the CWALL buffer threshold has been reached.

Note: The SLODN field is not related to message IST211I. This message is issued at a threshold value greater than CWALL.

IST1568I

inlp is a decimal value that indicates the total number of inbound (to VTAM) NLPs received from this controller.

onlp is a decimal value that indicates the total number of outbound (from VTAM) NLPs sent to this controller.

bfnlp is a decimal value that indicates the total number of read buffers used for NLPs.

System Action: Processing continues.

Operator Response: Follow the instructions of the system programmer to tune the system. To discontinue statistics recording, enter the MODIFY NOTNSTAT command.

Programmer Response: For additional information on tuning and analyzing tuning statistics, see the *z/OS Communications Server: SNA Network Implementation Guide*

IST441I **DLRMAX =** *dlrmax* **CHWR =** *chwr* **CHRD =** *chrd*

Explanation: VTAM issues this message as part of a message group. The first message in the group is IST440I. See the explanation of that message for a complete description.

IST442I **ATTN =** *attn* **RDATN =** *rdatn* **IPDU =** *ipdu*

Explanation: VTAM issues this message as part of a message group. The first message in the group is IST440I. See the explanation of that message for a complete description.

IST443I **OPDU =** *opdu* **RDBUF =** *rdbuf* **SLODN =** *slodn*

Explanation: VTAM issues this message as part of a message group. The first message in the group is IST440I. See the explanation of that message for a complete description.

IST447I **BUFFER SIZE WAS IGNORED FOR ONE OR MORE POOLS**

Explanation: VTAM issues this message when the programmer specified the buffer size in a pool that does not allow buffer size specification. You may specify only the IOBUF buffer size.

System Action: The incorrect buffer size was ignored. The default size was used. VTAM start procedure continues.

Operator Response: Save the system log for problem determination.

Programmer Response: Specify the size of the buffer for IOBUF.

IST448I *option* **OPTION IGNORED –** *reason*

Explanation: VTAM issues this message during processing of VTAM start options or in response to a DISPLAY VTAMOPTS or MODIFY VTAMOPTS command when an error is encountered while processing *option*.

option is the name of the start option that was ignored.

reason indicates the reason for the problem and is determined by when the error occurred.

- If the error occurred during the processing of VTAM start options, *reason* can be one of the following:

  COUPLING FACILITY NOT SUPPORTED
  The coupling facility is not supported by the current version of MVS. There is no active CFRM policy or no CFRM dataset.

  HARDWARE SUPPORT NOT AVAILABLE
  The required hardware support associated with this option is not available.

  INSUFFICIENT STORAGE
  There was insufficient common or private storage to process this start option.

  LLINES NO LONGER SUPPORTED
  This value (LLINES) for the OSITOPO start option is not supported by the current version of VTAM.

  NO LONGER SUPPORTED
  This start option is not supported by the current version of VTAM.

  NOLLINES NO LONGER SUPPORTED
  This value (NOLLINES) for the OSITOPO start option is not supported by the current version of VTAM.

  NOT A USS TABLE
  The table identified by the USSTAB start option is not a USS table.

  VALID ONLY FOR ICN
  This start option is valid only for an interchange network node.

VALID ONLY FOR ICN OR MDH
This start option is valid only for an interchange network node or migration data host.

VALID ONLY FOR NETWORK NODE OR MDH
This start option is valid only for a network node or migration data host. It is not valid for an end node that supports only APPN functions.

XCF NOT SUPPORTED
Either the sysplex is unavailable or you are running with a level of MVS that does not support XCF.

- If the error occurred in response to a DISPLAY VTAMOPTS command, *reason* can be one of the following:

CANNOT BE DISPLAYED
This start option is not valid on the DISPLAY VTAMOPTS command.

HAS NOT BEEN MODIFIED
This start option cannot be displayed because FORMAT=MODIFIED was specified on the command, and this start option has not been modified since VTAM was initialized.

UNRECOGNIZED OPTION
option is not a valid VTAM start option.

- If the error occurred in response to a MODIFY VTAMOPTS command, *reason* can be one of the following:

CANNOT BE MODIFIED
This start option is not valid on the MODIFY VTAMOPTS command.

HARDWARE SUPPORT NOT AVAILABLE
The required hardware support associated with this option is not available.

INSUFFICIENT STORAGE
There was insufficient private storage to process this start option.

LLINES NO LONGER SUPPORTED
This value (LLINES) for the OSITOPO start option is not supported by the current version of VTAM.

NOLLINES NO LONGER SUPPORTED
This value (NOLLINES) for the OSITOPO start option is not supported by the current version of VTAM.

SAWDATA REQUIRES SAW DATA FILTER
This value (SAWDATA) for the SAVERSCV start option is not valid on the MODIFY VTAMOPTS command because there is not an active SAW filter table.

SPECIFIED VALUE NOT VALID
The specified value for this start option is not a valid value for this option.

UNRECOGNIZED OPTION
option is not a valid VTAM start option.

VALID ONLY FOR A NETWORK NODE
This start option is not valid on the MODIFY VTAMOPTS command because it applies only to a network node configuration. This VTAM must be configured as a network node in order for this start option to be modifiable.

VALID ONLY FOR AN APPN NODE
This start option is not valid on the MODIFY VTAMOPTS command because it applies only to an APPN configuration. This VTAM must be configured as a network node, interchange node, end node, or migration data host in order for this start option to be modifiable.

VALID ONLY FOR AN END NODE OR MDH
This start option is only valid at end nodes and migration data hosts (MDH).

VALID ONLY FOR ICN
This start option is not valid on the MODIFY VTAMOPTS command because it applies only to an interchange network node configuration.

VALID ONLY FOR ICN OR MDH
This start option is not valid on the MODIFY VTAMOPTS command because it applies only to an interchange network node or migration data host configuration.

VALID ONLY FOR NETWORK NODE OR MDH
This start option is not valid on the MODIFY VTAMOPTS command because it applies only to a network node

or migration data host configuration. It is not valid for an end node that supports only APPN functions. This VTAM must be configured as a network node or migration data host in order for this start option to be modifiable.

System Action:

- Processing of VTAM start options
  - If *reason* is **STRUCTURE NOT DEFINED**, a connection attempt will not be made to the coupling facility structure. VTAM initialization continues.
  - If *reason* is **NOT A USS TABLE**, VTAM uses the IBM-supplied default USS table.
  - If *reason* is **LLINES NO LONGER SUPPORTED**, or **NOLLINES NO LONGER SUPPORTED**, VTAM will ignore this value for OSITOPO. If other values have been specified for OSITOPO, they will be processed.
  - For all other *reason*s, VTAM ignores this start option, but the processing of VTAM start options continues.
- DISPLAY VTAMOPTS command
  - VTAM does not display this start option.
- MODIFY VTAMOPTS command
  - VTAM ignores this start option. If there are other valid options specified on the MODIFY VTAMOPTS command, processing of the command continues.

Operator Response:

- Processing of VTAM start options
  - For **INSUFFICIENT STORAGE**, if VTAM has been initialized, wait a short time and reenter the command. If VTAM continues to issue this message, enter the DISPLAY BFRUSE command to display information about the common storage area. Total VTAM private storage information is also displayed in message IST981I. Enter the DISPLAY STORUSE command to display storage usage for storage pools. Save the system log and request a dump for problem determination.

    If VTAM initialization failed, save the system log for problem determination.
  - For **STRUCTURE NOT DEFINED**, check the VTAM start options file (ATCSTRxx) and restart VTAM to use the start option. The value is the name of a coupling facility structure. If the value is incorrect, restart VTAM with the correct value. If the value is correct, the structure has not been defined in the active CFRM policy. Provide the structure name to the system programmer.
  - For all other *reason*s, save the system log for problem determination.

  Provide the start options used to start VTAM.
- DISPLAY VTAMOPTS command
  - For **CANNOT BE DISPLAYED** or **UNRECOGNIZED OPTION**, ensure that you entered *option* correctly. Refer to *z/OS Communications Server: SNA Operation* to check options that are valid for the DISPLAY VTAMOPTS command.
- MODIFY VTAMOPTS command
  - For **INSUFFICIENT STORAGE**, wait a short time and reenter the command. If VTAM continues to issue this message, enter the DISPLAY BFRUSE command to display information about total VTAM private storage. Enter the DISPLAY STORUSE command to display storage usage for storage pools. Save the system log and request a dump for problem determination.
  - For **SPECIFIED VALUE NOT VALID**, ensure that you entered *option* correctly. Refer to *z/OS Communications Server: SNA Operation* to check values that are valid for this start option.
  - For **UNRECOGNIZED OPTION**, ensure that you entered *option* correctly. Refer to *z/OS Communications Server: SNA Operation* to check options that are valid for the MODIFY VTAMOPTS command.
  - For **VALID ONLY FOR A NETWORK NODE**, save the system log for problem determination. Message IST1348I is issued during VTAM initialization and in response to the DISPLAY VTAMOPTS command and displays the node type of this VTAM.

    If node type in message IST1348I is **NETWORK NODE** or **INTERCHANGE NODE**, this VTAM is a network node.
  - For **VALID ONLY FOR AN APPN NODE**, save the system log for problem determination. Message IST1348I is issued during VTAM initialization and in response to the DISPLAY VTAMOPTS command and displays the node type of this VTAM.

    If node type in message IST1348I is **END NODE, INTERCHANGE NODE, MIGRATION DATA HOST**, or **NETWORK NODE**, this VTAM is an APPN node. Otherwise, this node is a **SUBAREA NODE**.

– For **VALID ONLY FOR ICN**, save the system log for problem determination. Message IST1348I is issued during VTAM initialization and in response to the DISPLAY VTAMOPTS command and displays the node type of this VTAM.

  If node type in message IST1348I is **INTERCHANGE NODE**, this start option can be modified in this VTAM.

– For **VALID ONLY FOR ICN OR MDH**, save the system log for problem determination. Message IST1348I is issued during VTAM initialization and in response to the DISPLAY VTAMOPTS command and displays the node type of this VTAM.

  If node type in message IST1348I is **INTERCHANGE NODE**, or **MIGRATION DATA HOST**, this start option can be modified in this VTAM.

– For **VALID ONLY FOR NETWORK NODE OR MDH**, save the system log for problem determination. Message IST1348I is issued during VTAM initialization and in response to the DISPLAY VTAMOPTS command and displays the node type of this VTAM.

  If node type in message IST1348I is **NETWORK NODE**, **INTERCHANGE NODE**, or **MIGRATION DATA HOST**, this start option can be modified in this VTAM.

Programmer Response:

- Processing of VTAM start options
  – For **INSUFFICIENT STORAGE**, increase storage as required. You can modify the CSALIMIT and CSA24 start options using the MODIFY VTAMOPTS command.
  – For **NOT A USS TABLE**, supply the operator with the name of a valid USS table. The MODIFY TABLE command can be entered with ID=ISTNOP to change the USS table used for operator messages and commands.
  – For **STRUCTURE NOT DEFINED**, define the structure name in the active CRFM policy. See *z/OS MVS Setting Up a Sysplex* for more information on how to define a structure in the CFRM policy.
- DISPLAY VTAMOPTS command
  – None.
- MODIFY VTAMOPTS command
  – For **INSUFFICIENT STORAGE**, increase storage as required.
  – For **VALID ONLY FOR A NETWORK NODE**, review the system log to correct the command issued and the definition statements (if appropriate). To configure this VTAM as a network node, you must specify NODETYPE=NN during start processing.
  – For **VALID ONLY FOR AN APPN NODE**, review the system log from the operator to correct the command issued and the definition statements (if appropriate). To configure this VTAM as an APPN node, you must specify NODETYPE=NN or NODETYPE=EN during start processing.
  – For **VALID ONLY FOR ICN**, review the system log from the operator to correct the command issued and the definition statements (if appropriate). To configure this VTAM as an interchange network node, you must specify NODETYPE=NN, HOSTSA=*n*, and SACONNS=YES during start processing.
  – For **VALID ONLY FOR ICN OR MDH**, review the system log from the operator to correct the command issued and the definition statements (if appropriate). To configure this VTAM as an interchange network node, you must specify NODETYPE=NN, HOSTSA=*n*, and SACONNS=YES during start processing. To configure this VTAM as a migration data host, you must specify NODETYPE=EN, HOSTSA=*n*, and SACONNS=YES during start processing.
  – For **VALID ONLY FOR NETWORK NODE OR MDH**, review the system log from the operator to correct the command issued and the definition statements (if appropriate). To configure this VTAM as a network node, you must specify NODETYPE=NN during start processing. To configure this VTAM as a migration data host, you must specify NODETYPE=EN, HOSTSA=*n*, and SACONNS=YES during start processing.

IST449I *limitname* **=** *csa*, **CURRENT =** *current*, **MAXIMUM =** *maxlevel*

Explanation: This message is the first in a group of messages that VTAM issues in response to a DISPLAY BFRUSE command. This message displays information about VTAM common service area (CSA) usage. A complete description of the message follows.

```
|   IST449I  limitname = csa, CURRENT = current, MAXIMUM = maxlevel
|   IST790I  MAXIMUM type USED = maxK
|   IST1667I SYSTEM CSA LIMIT = sys_csa_limit
|   IST1831I percent OF SYSTEM CSA STORAGE REMAINING = sys_csa_avail
|  [IST449I  CSA24 LIMIT = csa, CURRENT = current, MAXIMUM = maxlevel]
```

```
| [IST790I  MAXIMUM type USED = maxK]
|  IST595I  IRNLIMIT = irnlimitK, CURRENT=currentirnK MAXIMUM = maximumirnK
|  IST981I  VTAM PRIVATE: CURRENT = currentK, MAXIMUM USED = maximumK
|  IST924I -------------------------------------------------------------
|  IST1565I type    MODULES = currentK
|  IST1565I type    MODULES = currentK
|  IST1565I type    MODULES = currentK
|  IST314I  END
```

Note: Values are expressed in kilobytes.

IST449I

limitname is either **CSALIMIT** (the request is to set the CSA limit) or **CSA24 LIMIT** (the request is to set the CSA limit for 24-bit addressable storage).

csa is the maximum amount of the particular type of CSA that VTAM can use for buffers. Limits are enforced on the requested amount of storage, but *csa* can be **NO LIMIT**, which means VTAM can request as much as is available.

current is the current VTAM CSA allocation for buffers.

maxlevel is the largest CSA allocation level for buffers since the last DISPLAY BFRUSE command.

IST595I

irnlimit is the maximum amount of VTAM storage that can be used for intermediate routing node slowdown traffic.

currentirn is the amount of storage currently in use for intermediate routing node slowdown traffic.

maximumirn is the largest allocation level since the last DISPLAY BFRUSE command.

IST790I

type can be one of the following:

CSA 31-bit and 24-bit addressable common storage

CSA24 24-bit addressable common storage

*max*K is the maximum amount of *type* ever in use for buffers since VTAM was started.

IST981I

This message shows the private storage (both above and below the 16M line) that VTAM explicitly acquires (with GETMAIN).

*current*K is the amount of VTAM private storage currently in use. This does not include the amount of private storage required to load the VTAM modules.

*maximum*K is the maximum amount of VTAM private storage ever in use since VTAM was started.

IST1565I

type can be one of the following:

CSA 31-bit and 24-bit addressable common storage acquired for VTAM modules

CSA24 24-bit addressable common storage acquired for VTAM modules

PRIVATE
Private storage used to load VTAM modules

currentK is the current VTAM CSA/ECSA allocation for modules.

IST1667I

- *sys_csa_limit* is the maximum amount of system CSA that VTAM will use. It is derived by taking the total amount of CSA and ECSA defined in the system and multiplying by 0.9 (in other words, VTAM will never use more than ninety percent of the total CSA for the system). Refer to *z/OS Communications Server: SNA Resource Definition Reference* for more information about how the system CSA limit relates to the CSALIMIT Start Option.

| **IST1831I**

| • *percent* is the percentage of system CSA plus Extended CSA available for use.

- *sys_csa_avail* is the current total amount of system CSA plus Extended CSA available for use.

System Action: Processing continues.

Operator Response: Inspect the data to determine whether further action is required.

If the current allocation is close to the limit, it may not be reasonable to begin significant modifications to the system configuration or workload. Save the system log for problem determination.

Programmer Response: Review this data before making significant changes to the system configuration or workload. Use this data to ensure that storage requirements are being met and that CSA and private storage are being used effectively in the management of VTAM's storage resources.

IST450I INVALID *command* **COMMAND SYNTAX**

Explanation: VTAM issues this message when the *command* has invalid syntax.

See Chapter 14, "Command and RU types in VTAM messages" on page 685 for a description of *command*. If VTAM cannot determine the command type because of the syntax error, the *command* field in this message will be blank.

System Action: VTAM rejects the command.

Operator Response: Reenter the command with the correct syntax. See *z/OS Communications Server: SNA Operation* for the correct syntax.

Programmer Response: None.

Note: If you modify this message, you must specify MSG=(IST450I,1) on the USSMSG macro. This will define IST450I and USS message 1 to be identical in the operation-level USS table. See the *z/OS Communications Server: SNA Resource Definition Reference* for information on the USSMSG macro for VTAM operator messages.

IST451I *command* **COMMAND UNRECOGNIZED, PARAMETER=***parameter*

Explanation: VTAM issues this message when the *command* with the specified parameter is not supported on this operating system.

See Chapter 14, "Command and RU types in VTAM messages" on page 685 for a description of *command*.

System Action: VTAM rejects the *command*.

Operator Response: Reenter the command correctly. See *z/OS Communications Server: SNA Operation* for the correct syntax.

Programmer Response: None.

Note: If you modify this message, you must specify MSG=(IST451I,2) on the USSMSG macro. This will define IST451I and USS message 2 to be identical in the operation-level USS table. See the *z/OS Communications Server: SNA Resource Definition Reference* for information on the USSMSG macro for VTAM operator messages.

IST452I *parameter* **PARAMETER EXTRANEOUS**

Explanation: VTAM issues this message when an extraneous parameter *parameter* is specified for an operator command. The parameter may be invalid for the command because it may conflict with another parameter entered for the command.

Notes:

1. This message may be issued as the result of conflicting verbs being specified on the command. For example, **ACT** and **INACT** are conflicting verbs on the following command:

   V ACT,INACT,ID=*name*

2. The parameter may be valid for other combinations of parameters and resource types.
3. Parameters on the operator commands are not processed in the order they are provided in the command.
4. All positional parameters in a command that occur before the first positional keyword parameter will be labeled **P***x*, starting with **P1**.

System Action: VTAM rejects the command.

Operator Response: Reenter the command correctly. See *z/OS Communications Server: SNA Operation* for the correct syntax.

Programmer Response: None.

Note: If you modify this message, you must specify MSG=(IST452I,3) on the USSMSG macro. This will define IST452I and USS message 3 to be identical in the operation-level USS table. See the *z/OS Communications Server: SNA Resource Definition Reference* for information on the USSMSG macro for VTAM operator messages.

IST453I *parameter* **PARAMETER VALUE** *value* **NOT VALID**

Explanation: VTAM issues this message when *parameter* was specified on an operator command and is not valid. *value* is the first 17 characters of the value specified for *parameter*. If no value is displayed for *value*, then the value of the parameter specified was of zero length (e.g. NETID=).

Possible reasons for this message include:

- If the value specified for *parameter* is a network name, the name might be undefined or the resource might be inactive.
- If the value specified for *parameter* is a network name, and IDTYPE was also specified on the command, this message can be displayed when:
  - The network name *parameter* does not exist.
  - The network name *parameter* might be correct, but does not exist with the IDTYPE that was specified on the command.

Notes:

1. The parameter might be valid for other combinations of parameters and resource types or might have been omitted when required.
2. Parameters on operator commands are not processed in the order they are entered on the command.

System Action: The command is not executed.

Operator Response: Ensure that you entered the command correctly. For additional information on commands and command syntax, see *z/OS Communications Server: SNA Operation*.

Programmer Response: None.

Note: If you modify this message, you must specify MSG=(IST453I,4) on the USSMSG macro. This will define IST453I and USS message 4 to be identical in the operation-level USS table. See the *z/OS Communications Server: SNA Resource Definition Reference* for information on the USSMSG macro for VTAM operator messages.

IST454I *command* **COMMAND FAILED, INSUFFICIENT STORAGE**

Explanation: Not enough storage is available for successful processing of *command*. If VTAM cannot determine the command because of lack of storage, the *command* portion of the message will be null.

System Action: VTAM rejects the command.

Operator Response: Wait a short time and reenter the command. If VTAM continues to issue this message, enter the DISPLAY BFRUSE command. Enter the DISPLAY STORUSE command to display storage usage for storage pools. Save the system log and request a dump for problem determination.

Programmer Response: Verify that the operator entered the buffer pool or CSA start options as specified in the start procedures.

Increase storage as required. For insufficient storage errors, you might want to redefine your buffer pool or CSA limits. If the start option cannot be modified using the MODIFY VTAMOPTS command, you must modify the VTAM start options file (ATCSTRxx) and restart VTAM to use the start option.

- See the *z/OS Communications Server: SNA Migration* to determine the storage requirements for VTAM.
- See the *z/OS Communications Server: SNA Resource Definition Reference* for a description of VTAM start options.

- See the *z/OS Communications Server: SNA Operation* for information about the DISPLAY BFRUSE Command, theDISPLAY STORUSE Command, and the MODIFY VTAMOPTS Command.
- See the *z/OS Communications Server: SNA Network Implementation Guide* for an explanation and description of buffer pools and for general information on buffer pool specification and allocation.
- See the *z/OS Communications Server: SNA Diagnosis Vol 2, FFST Dumps and the VIT* for information about analyzing dumps and about analyzing storage using the VIT analysis tool, if external trace is active.

Note: If you modify this message, you must specify MSG=(IST454I,8) on the USSMSG macro. This will define IST454I and USS message 8 to be identical in the operation-level USS table. See the *z/OS Communications Server: SNA Resource Definition Reference* for information on the USSMSG macro for VTAM operator messages.

IST455I *parameters* **SESSIONS ENDED**

Explanation: VTAM ended LU-LU sessions as a result of the VARY TERM command. NOTIFY=YES was specified or was taken by default. *parameters* are the parameters from the VARY TERM command, and will always be network qualified. For example:

```
LU1=NETC.APPC2 SESSIONS ENDED
```

System Action: Processing continues.

Operator Response: None.

Programmer Response: None.

Note: If you modify this message, you must specify MSG=(IST455I,11) on the USSMSG macro. This will define IST455I and USS message 11 to be identical in the operation-level USS table. See the *z/OS Communications Server: SNA Resource Definition Reference* for information on the USSMSG macro for VTAM operator messages.

IST456I *keyword* **REQUIRED PARAMETER OMITTED**

Explanation: VTAM issues this message when a required parameter is missing from an operator command.

keyword is the name of the missing parameter, if known; otherwise, *keyword* is the name of the command that was not entered correctly.

System Action: VTAM rejects the command.

Operator Response: Correct and reenter the command. See *z/OS Communications Server: SNA Operation* for more information on VTAM commands and their parameters.

Programmer Response: None.

Note: If you modify this message, you must specify MSG=(IST456I,12) on the USSMSG macro. This will define IST456I and USS message 12 to be identical in the operation-level USS table. See the *z/OS Communications Server: SNA Resource Definition Reference* for information on the USSMSG macro for VTAM operator messages.

IST457I **POSITIVE** *command* **COMMAND RESPONSE**

Explanation: VTAM has accepted the VARY TERM command *command*. Either no applicable sessions exist or session termination will be performed for all applicable sessions as requested. In either case, VTAM issues message IST455I when all applicable sessions have ended (or immediately if no sessions exist), if the NOTIFY=YES parameter has been specified.

System Action: Processing continues.

Operator Response: None.

Programmer Response: None.

Note: If you modify this message, you must specify MSG=(IST457I,0) on the USSMSG macro. This will define IST457I and USS message 0 to be identical in the operation-level USS table. See the *z/OS Communications Server: SNA Resource Definition Reference* for information on the USSMSG macro for VTAM operator messages.

IST458I USS MESSAGE *number* **NOT DEFINED**

Explanation: The user-defined unformatted system services (USS) table that supports this program operator application program (POA) does not contain a USSMSG macro to define the text for the USS message *number*.

System Action: If *number* is **0** or **11**, VTAM has completed the command successfully. Otherwise, VTAM does not execute the command.

Operator Response: Save the system log for problem determination.

Programmer Response: Add the necessary message to the user-defined USS table.

Note: If you modify this message, you must specify MSG=(IST458I,14) on the USSMSG macro. This will define IST458I and USS message 14 to be identical in the operation-level USS table. See the *z/OS Communications Server: SNA Resource Definition Reference* for information on the USSMSG macro for VTAM operator messages.

IST459I *command* **FAILED — ID =** *nodename* **— ADJ NODE** *adjnode reason*

Explanation: The *command* for *nodename* failed because of an error on the adjacent node *adjnode*.

reason is one of the following:

INVALID
This *reason* occurs in the following situations:

- Link station *nodename* contacted adjacent node *adjnode* which was not a PU type 4 or a PU type 5.
- Communication controller *nodename* specified link station *adjnode* for a load or dump, but *adjnode* is not a link station, is a switched link station, or is not associated with NCP *nodename*.
- The link station was not found.

CANNOT BE DEFINED
Link station *nodename* attempted to contact an adjacent node (*adjnode*) that was unknown to VTAM. VTAM was unable to define this adjacent node because of insufficient storage.

STATE *statename* **INVALID**
Link station *adjnode* was chosen as the load/dump station for communication controller *nodename* to load or dump, but it cannot be used for loading or dumping in its current state *statename*.

CA / NCP CONFLICT
Link station *nodename*, which is being activated, is a communication-adapter SDLC link station associated with the NCP *adjnode*. (VTAM allows communication adapters to contact an NCP over a communication-adapter SDLC link or to activate an NCP over a channel- or noncommunication-adapter SDLC link, but not both at the same time.)

UNAVAILABLE
Link station *nodename* is not associated with NCP *adjnode*.

System Action: VTAM deactivates the node, and the command is rejected.

Operator Response:

INVALID
Activate link station *nodename*. Then enter or reenter *command*, and do not specify the load or dump station on the command (let VTAM choose it).

CANNOT BE DEFINED
Try to activate the link station later. Enter the DISPLAY BFRUSE command. Enter the DISPLAY STORUSE command to display storage usage for storage pools. Save the system log and dump for problem determination.

IST460I

STATE *statename* **INVALID**
Activate link station *nodename*. Then enter or reenter *command*, but do not specify the load or dump station (let VTAM choose it) on the command.

CA / NCP CONFLICT
Enter the DISPLAY ID command for *adjnode* (*adjnode* is the NCP that is adjacent to *nodename*). Save the system log for problem determination.

UNAVAILABLE
Save the system log for problem determination.

Programmer Response:

INVALID
Look at the adjacent node to determine the cause of the problem.

CANNOT BE DEFINED
Increase storage as required. For insufficient storage errors, you might want to redefine your buffer pool or CSA limits. If the start option cannot be modified using the MODIFY VTAMOPTS command, you must modify the VTAM start options file (ATCSTRxx) and restart VTAM to use the start option.

- See the *z/OS Communications Server: SNA Migration* to determine the storage requirements for VTAM.
- See the *z/OS Communications Server: SNA Resource Definition Reference* for a description of VTAM start options.
- See the *z/OS Communications Server: SNA Operation* for information about the DISPLAY BFRUSE Command, theDISPLAY STORUSE Command, and the MODIFY VTAMOPTS Command.
- See the *z/OS Communications Server: SNA Network Implementation Guide* for an explanation and description of buffer pools and for general information on buffer pool specification and allocation.
- See the *z/OS Communications Server: SNA Diagnosis Vol 2, FFST Dumps and the VIT* for information about analyzing dumps and about analyzing storage using the VIT analysis tool, if external trace is active.

STATE *statename* **INVALID**
Look at the adjacent node to determine the cause of the problem.

CA / NCP CONFLICT
If you want the NCP represented by *adjnode* to be contacted through the communication adapter SDLC link station, ask the operator to enter a VARY INACT command for *adjnode* to deactivate the NCP. The operator may then contact the NCP represented by *adjnode* through the communication adapter SDLC link station by issuing a VARY ACT command for *nodename*.

UNAVAILABLE
Enter the DISPLAY STATIONS command and review the output for *adjnode*. The link station *nodename* may not have been genned into the adjacent NCP *adjnode* so is therefore unavailable.

If you cannot determine the cause of the problem from the output provided, take the following action:

- If you have access to IBMLink, search for known problems in this area. If no applicable matches are found, report the problem to IBM by using the Electronic Technical Report (ETR) option on IBMLink.
- If you do not have access to IBMLink, report the problem to the IBM software support center.

IST460I *command* **FOR U/RNAME ENTRY ID =** *nodename* **FAILED:** *reason*

Explanation: The *command* for *nodename* failed for one of the following reasons:

- The U or RNAME operands were specified on a VARY ACT command for a communication controller.
- The U or RNAME operands were defined in the communication controller deck, and processed when the communication controller was activated.

reason can be one of the following:

ALREADY CONNECTED
The link station specified in the RNAME list is in contact with or is attempting connection to another communication controller.

INSUFFICIENT STORAGE
Because of insufficient storage, VTAM was unable to build the dummy link station to represent a channel device address or a link station that was unknown to VTAM.

STATE *state* **INVALID**
The current state of the link station specified in the RNAME list or its higher level node is no longer appropriate. For example, the node may be in the process of being deactivated or may be undergoing error recovery. See the *z/OS Communications Server: IP and SNA Codes* for a description of *state*.

NODE CANNOT BE DEFINED
VTAM was unable to define a duplicate name, device address, or a link station that was unknown to VTAM.

NODE INVALID
The node specified in the RNAME list was not a channel adapter, SDLC line, or link station.

NO SWITCHED LINK AVAILABLE
A switched link station connection cannot be established because no switched subarea links are usable.

System Action: VTAM ends activation for the U or RNAME entry.

Operator Response:

INSUFFICIENT STORAGE
Wait a short time and reenter the command. If VTAM continues to issue this message, enter the DISPLAY BFRUSE command. Enter the DISPLAY STORUSE command to display storage usage for storage pools. Save the system log and request a dump for problem determination.

For a VTAM internal trace, enter a MODIFY TRACE command, specifying a smaller buffer size.

STATE *state* **INVALID**
Deactivate the node (or its higher level node). Then activate the node (or its higher level node).

NO SWITCHED LINK AVAILABLE
Activate the switched major node after the VARY ACT commands for the communication controllers have been processed. If the switched major node was activated before the communication controllers, activate the communication controllers first and then activate the switched major node. In all cases, display U or RNAME entry *nodename*, and for problem determination.

For errors in start options or definition lists, save the system log for problem determination.

Programmer Response: Ensure that the generated RNAME list or the RNAME list provided to the operator for the communication controller activation contains the correct name of the link station to be connected to the communication controller.

INSUFFICIENT STORAGE
Provide more storage at VTAM start time. You might want to redefine your buffer pool or CSA start options. If the start option cannot be modified using the MODIFY VTAMOPTS command, you must modify the VTAM start options file (ATCSTRxx) and restart VTAM to use the start option.

NO SWITCHED LINK AVAILABLE
Verify that the path definitions for *nodename* are enabled and CALL=OUT or CALL=INOUT is coded.

For errors in start options or definitions lists, ensure that all requirements for VTAM are correct for your system. When you have corrected the error condition, ask the operator to reenter the command.

IST461I ACTIVATE FOR U/RNAME ENTRY ID = *nodename* **STARTED**

Explanation: A VARY ACT command for a communication controller specified *nodename* as an RNAME operand on that command or as a U generated value.

System Action: Activation of *nodename* is started if the link of the U or RNAME entry *nodename* is active. For an inactive link, the link is activated first, followed by activation of the *nodename*.

Operator Response: None.

Programmer Response: None.

IST462I **ACTIVATION OF LINK STATION** *nodename* **IS DEFERRED PENDING HIGHER LEVEL NODE ACTIVATION**

Explanation: *nodename* was specified in the RNAME list for a communication controller that is being activated. VTAM cannot activate *nodename* because the communication controller containing it is not known to VTAM.

System Action: VTAM has queued the activation for *nodename* and will activate it when the communication controller containing it is activated.

Operator Response: If the connection with the communication controller containing *nodename* is desired, enter a VARY ACT command for that communication controller. If the connection is not desired, enter a VARY INACT command for *nodename* to deactivate the link station.

Programmer Response: None.

IST464I **LINK STATION** *nodename1* **HAS CONTACTED** *nodename2* **SA** *subarea*

Explanation: The link station *nodename1* successfully contacted the node *nodename2* in subarea *subarea*. If *nodename2* is blank and *subarea* is zero, VTAM has contacted a subarea node in another network. Because this VTAM node is nongateway-capable, it cannot identify the network and subarea address of the contacted node. If the link station is in state **PCTD1** and is not on an NCP link-station queue, VTAM does not obtain a dummy NCP to queue the link station, so *nodename2* is blank and *subarea* is zero. *nodename2* is *****NA***** in a VTAM to VTAM connection.

System Action: VTAM activates the link station.

Operator Response: If VTAM has contacted a subarea node within another network, and that is not your intention, deactivate the link station.

Programmer Response: None.

IST465I *command* **FOR ID =** *nodename* **FAILED — NO {LOAD|DUMP|LINK} STATION AVAILABLE**

Explanation: VTAM issues this message when the *command* failed for *nodename* because the necessary load, dump or link station was not available for one of the following reasons:

1. VTAM tried to select a default dump or load station, and none was available.
2. The load or dump station was deactivated while a load or dump was being performed.
3. VTAM was unable to establish connectivity between *nodename* and any link station in the RNAME list from the VARY ACT command.

System Action: VTAM deactivates *nodename* and rejects the command. Other processing continues.

Operator Response: Display *nodename* and all link stations to check spelling and status. Save the system log for problem determination.

- For reasons 1 and 2, allow VTAM to choose the default load or dump station.
- For reason 3, activate the link stations before reissuing the command to activate the communication controller.

VTAM will issue other error messages for each link station that failed to establish a connection with the communication controller. See those messages for further help.

Programmer Response: Check that the link stations in the RNAME list are valid and can be used to establish connectivity with the communication controller. Correct the RNAME list if needed.

IST466I *command* **FOR ID =** *controller* **CONTINUES — UNABLE TO DO** *text*

Explanation: During the deactivation or recovery of a communication controller *controller*, VTAM was unable to find a link station to load, dump, or remotely power-off (RMPO) the communication controller.

See Chapter 14, “Command and RU types in VTAM messages” on page 685 for a description of *command*.

text is one of the following:

LOAD — NO LINK STATION AVAILABLE

DUMP — NO LINK STATION AVAILABLE

RMPO — NO LINK STATION AVAILABLE

System Action: VTAM continues to process the *command* for *controller*. The load, dump, or remote power-off (RMPO) is not performed.

Operator Response: Display *controller* and all link stations to check status. If the communication controllers containing the link stations are not usable, save the system log for problem determination.

Programmer Response: If a communication controller containing a link station in the VARY ACT RNAME list is not usable and it should be, instruct the VTAM operator whether or not to dump and then reload the communication controller.

IST467I CONTACTED ERROR TYPE *type* **FOR ID =** *nodename*

Explanation: This message is the first in a group of messages. A complete description of the message group follows.

```
 IST467I  CONTACTED ERROR TYPE type FOR ID = nodename
[IST1580I  XID RECEIVED BY VTAM:
 IST1574I    offset hexdata_1 hexdata_2 hexdata_3 hexdata_4 EBCDIC_data
⋮
 IST1574I    offset hexdata_1 hexdata_2 hexdata_3 hexdata_4 EBCDIC_data]
[IST1582I    CONTROL VECTOR X'22' ANALYSIS:
 IST1583I      BYTE OFFSET OF FIRST BYTE IN ERROR = byteoffset
 IST1584I      BIT OFFSET OF FIRST BIT IN ERROR = bitoffset
[IST1585I      SENSE CODE = sense]]
[IST1586I  XID SENT BY VTAM:
 IST1574I    offset hexdata_1 hexdata_2 hexdata_3 hexdata_4 EBCDIC_data
⋮
 IST1574I    offset hexdata_1 hexdata_2 hexdata_3 hexdata_4 EBCDIC_data]
[IST1582I    CONTROL VECTOR X'22' ANALYSIS:
 IST1583I      BYTE OFFSET OF FIRST BYTE IN ERROR = byteoffset
 IST1584I      BIT OFFSET OF FIRST BIT IN ERROR = bitoffset
 IST1585I      SENSE CODE = sense]
 IST314I  END
```

IST467I

The activation procedure for *nodename* failed because of an error specified by the CONTACTED RU error *type*.

Notes:

1. If the XID received from the adjacent node contains no data (XID(NULL)), VTAM does not issue messages IST1574I, IST1580I, or IST1582I through IST1585I.
2. For a *type* of **05**, **07**, and **08**, VTAM displays the XID data received from and sent to the adjacent node in messages.

type can be one of the following:

03 A CONTACT RU error occurred during processing; no XIDs are available. The routes between the activating host and the target NCP may be defined incorrectly.

05 Exchanged XID parameters are not compatible. Possible reasons include:
- The transmission group numbers do not match or the transmission group number is zero in both nodes.
- The adjacent PU is not able to accept the XID parameter.
- If this is not a transmission group problem, ensure that HOSTSA has been coded in your start list. If HOSTSA is not coded in either start list, you may get this error.
- There may be a lack of storage in the channel-attached hosts.

07 No routing capability to the adjacent node.

08 VTAM cannot add the link station to the currently active TG. Possible reasons include:
- XID parameters are incompatible with other links in an NCP multilink transmission group.
- There is another active TG with the same TG number connecting the same two subareas. One of the subareas is a VTAM host.
- This host has a connection to another node with the same subarea number as the one being activated.

OR

NCP will set this error type if the MLTG segment size of the new link is smaller than the MLTG size currently in use by the TG.

0B The 2.1 boundary function detected an XID error during a contact sequence for a PU type 2.0 or 2.1 node.

IST1574I

This message displays the XID received from (if preceded by message IST1580I) or sent to (if preceded by message IST1586I) the adjacent node.

offset is the hexadecimal offset within the XID.

hexdata_1, *hexdata_2*, *hexdata_3* and *hexdata_4* each display 4 bytes of the XID in hexadecimal format.

EBCDIC_data displays 16 bytes of the XID in EBCDIC format. Unprintable characters are represented by periods.

IST1580I

This message is a header for the information displayed in messages IST1574I and IST1582I through IST1585I for the XID received from the adjacent node.

IST1582I

This message is a header for the information displayed in messages IST1583I through IST1585I. Messages IST1582I through IST1585I are present only if CV X'22' is present in the XID.

IST1583I

This message is issued only if *byteoffset* in message IST1583I is nonzero or *bitoffset* in message IST1584I is nonzero.

byteoffset is the hexadecimal offset of the byte containing the error, as noted by the adjacent node. Offsets are from byte 0 within the XID.

IST1584I

This message is issued only if *byteoffset* in message IST1583I is nonzero or *bitoffset* in message IST1584I is nonzero.

bitoffset is the hexadecimal offset of the bit containing the error, as noted by the adjacent node. Offsets are from bit 0 within the XID.

IST1585I

This message is issued only if sense data is included in CV X'22'.

sense is the SNA sense code set by the adjacent node identifying the reason the XID is rejected.

IST1586I

This message is a header for the information displayed in message IST1574I for the XID sent by VTAM to the adjacent node.

System Action: Activation of *nodename* fails. VTAM deactivates the node.

Operator Response: Save the system log and print the major node definition for problem determination.

Programmer Response: For *type*s **03, 05, 07, 08,** and **0B,** verify that the network definitions for the nodes involved are correct.

Additional recommended actions include:

- A *type* of **03** indicates one of the following problems:
  - A link-hardware problem during CONTACT processing. In this case, follow the installation problem determination procedure for the link.
  - There is an emulator program in the communication controller you are attempting to activate.
  - The adjacent link station on the NCP side of the channel connection has not been activated.
- For a *type* of **05**:
  - Make sure that the applicable link and link-station definitions are compatible.
  - Ensure that HOSTSA has been coded in your start list.

  - For a storage problem, check the *bufsize* value specified for the IOBUF buffer pool. If a channel-attached NCP is in this domain, this value must match or be greater than the value used for the UNITSZ operand on the HOST statement in the NCP definition. For an explanation of the *bufsize* value, see the description of buffer pool start options in the *z/OS Communications Server: SNA Resource Definition Reference*.
- For a *type* of **07**, make sure the proper route definitions have been supplied in each subarea node.
- For a *type* of **08**, make sure that the applicable link and link-station definitions are compatible. Issue a DISPLAY STATIONS command for a summary of connections to this subarea.
- For a *type* of **0B**, either the sent or received XID may contain an appended CV X'22' that provides more detailed information about the cause of the error. The last 4 bytes of the CV X'22' may contain sense data.

For *type* **05, 07, 08,** or **0B**, see the section on common subarea problems, in the *z/OS Communications Server: SNA Diagnosis Vol 1, Techniques and Procedures* for additional examples and problem determination actions. See *SNA Network Product Formats* or *z/OS Communications Server: SNA Data Areas Volume 1* for additional information on interpreting the CV X'22' and sense data, if provided in messages IST1582I through IST1585I.

For an apparent software problem, take the following actions:
- If you have access to IBMLink, search for known problems in this area. If no applicable matches are found, report the problem to IBM using the Electronic Technical Report (ETR) option on IBMLink.
- If you do not have access to IBMLink, report the problem to the IBM software support center.

IST473I **CONNECTIVITY TEST TO** *terminalname* **TERMINATED AFTER** *n* **ECHOES DUE TO I/O ERROR, SENSE =** *code*

Explanation: A host-connectivity (echo) test to terminal *terminalname*, initiated by an IBMTEST command entered by *terminalname*, was terminated.

code is the sense code and indicates the reason for the error. See the *z/OS Communications Server: IP and SNA Codes* for a description of *code*.

n is the number of times, in decimal, the requested data was sent to *terminalname* before the I/O error.

System Action: Processing continues.

Operator Response: Save the system log for problem determination.

Programmer Response: This is probably a hardware error. Determine the cause of the error, and reenter the command if desired. Follow the installation problem-determination procedure for the link error.

IST475I *command* **FAILED FOR** *nodename* **REQUEST** *runame* **SENSE** *code*

Explanation: VTAM is unable to complete *command* for *nodename*. The error occurred during the processing of request unit *runame*.

See Chapter 14, “Command and RU types in VTAM messages” on page 685 for a description of *command* and *runame*.

code is the sense code and indicates the reason for the failure. See the *z/OS Communications Server: IP and SNA Codes* for a description of *code*.

System Action: VTAM rejects the command.

Operator Response: If you can correct the reason for the failure, do so and reenter the command. If *nodename* is a resource in another domain, the error can be in either domain. Notify the operator of the other domain if action is required in that domain as well.

For example,
- **ACTIVATE FAILED FOR** *cdrmname* **REQUEST ACTCDRM SENSE 08120000**:
  - The activation of an SSCP-SSCP session, started by an ACTCDRM request from the other domain, failed because of insufficient storage in this domain.
  - The operator can restart the activation in this domain by issuing a VARY ACT command for *cdrmname*.
  - If the activation continues to fail:
    - Use the MODIFY CSALIMIT command to increase VTAM’s common service area storage.

- Deactivate other network resources to provide the necessary storage.

- **ACTIVATE FAILED FOR** *cdrmname* **REQUEST ACTCDRM SENSE 084E0000**:
  – The activation of an SSCP-SSCP session failed because the NETID in the ACTCDRM request or response does not match the NETID coded in the CDRM definition.
- **ACTIVATE FAILED FOR** *cdrmname* **REQUEST ACTCDRM SENSE 08810000**:
  – If this host is not a gateway host, and the operator issues the VARY ACT command for *cdrmname* for a gateway SSCP, the gateway NCP sends REQACTCDRM to the gateway SSCP. The gateway SSCP then attempts to activate the SSCP-SSCP session.
  – If this host is a gateway host and in a back-to-back configuration, the gateway NCP sends REQACTCDRM to the other gateway host to cause the SSCP-SSCP session to be established.

For a storage problem, enter the DISPLAY BFRUSE command. Enter the DISPLAY STORUSE command to display storage usage for storage pools. Save the system log and dump for problem determination.

Programmer Response: Verify that the operator entered the buffer pool or CSA start options as specified in the start procedures.

Increase storage as required. For insufficient storage errors, you might want to redefine your buffer pool or CSA limits. If the start option cannot be modified using the MODIFY VTAMOPTS command, you must modify the VTAM start options file (ATCSTRxx) and restart VTAM to use the start option.

- See the *z/OS Communications Server: SNA Migration* to determine the storage requirements for VTAM.
- See the *z/OS Communications Server: SNA Resource Definition Reference* for a description of VTAM start options.
- See the *z/OS Communications Server: SNA Operation* for information about the DISPLAY BFRUSE Command, theDISPLAY STORUSE Command, and the MODIFY VTAMOPTS Command.
- See the *z/OS Communications Server: SNA Network Implementation Guide* for an explanation and description of buffer pools and for general information on buffer pool specification and allocation.
- See the *z/OS Communications Server: SNA Diagnosis Vol 2, FFST Dumps and the VIT* for information about analyzing dumps and about analyzing storage using the VIT analysis tool, if external trace is active.

IST476I CDRM TYPE = {HOST|EXTERNAL} [, GATEWAY CAPABLE]

Explanation: This message is part of a group of messages that VTAM issues in response to a DISPLAY ID command for a cross-domain resource manager (CDRM). The message indicates whether the CDRM is within this host (**HOST**), or external to it (**EXTERNAL**).

If **HOST** is indicated and this CDRM is gateway capable, **GATEWAY CAPABLE** is displayed. Otherwise, no optional parameter is displayed.

System Action: Processing continues.

Operator Response: None.

Programmer Response: None.

IST477I CDRMS:

Explanation: This message is the header for a group of messages that VTAM issues in response to a DISPLAY ID command for a cross-domain resource manager (CDRM) major node or a DISPLAY CDRMS command. One or more IST482I messages will follow to list the CDRM minor nodes in the major node.

System Action: Processing continues.

Operator Response: None.

Programmer Response: None.

IST478I CDRSCS:

Explanation: This message is part of a group of messages that VTAM issues in response to a DISPLAY CDRSCS command for a cross-domain resource (CDRSC) major node. Following this heading, message IST483I lists the cross-domain resources that are defined to VTAM and managed by the CDRM or a part of the CDRSC major node being displayed.

System Action: Processing continues.

Operator Response: None.

Programmer Response: None.

IST479I **CDRM NAME =** *cdrmname*, **VERIFY OWNER = {YES|NO}**

Explanation: This message is part of a group of messages that VTAM issues in response to a DISPLAY ID command for a cross-domain resource (CDRSC). This message identifies the cross-domain resource manager (CDRM) that owns the CDRSC for which the display was requested. *cdrmname* will be *****NA***** if the CDRSC was not defined with a CDRM.

Owner verification of a CDRSC is optional, and is accomplished with the VFYOWNER keyword in the definition of a CDRSC.

VERIFY OWNER = YES indicates that owner verification is required in this host. When owner verification is in effect, VTAM will reject session setup requests that contain a conflicting owner.

VERIFY OWNER = NO indicates that owner verification is not required, so VTAM can automatically change CDRM ownership of a CDRSC.

System Action: Processing continues.

Operator Response: None.

Programmer Response: None.

IST482I *cdrmname status*, **SA** *subarea*, **EL** *element*, **NETID =** *cdrmnetid*

Explanation: This message is part of a group of messages that VTAM issues in response to a DISPLAY command concerning the cross-domain resource manager (CDRM). This message is the result of one of the following:

- A DISPLAY ID command for a cross-domain resource manager major node
- A DISPLAY CDRMS command requesting information about cross-domain resource managers (CDRMs) defined to this domain.

This message lists the CDRM (*cdrmname*), its status (*status*), its subarea address (in decimal) (*subarea*), and its element address (in decimal) (*element*). If the subarea address or element address is not available, *element* will be *****NA*****.

cdrmnetid is the network ID of *cdrmname*.

VTAM repeats this message as many times as needed to list the CDRMs in this major node or domain. See the *z/OS Communications Server: IP and SNA Codes* for a description of *status*.

System Action: Processing continues.

Operator Response: None.

Programmer Response: None.

IST483I *cdrscname status*, **CDRM =** *cdrmname*, **NETID =** *cdrscnetid*

Explanation: This message is part of a group of messages that VTAM issues in response to a DISPLAY command concerning cross-domain resources (CDRSC). It is the result of the following:

- A DISPLAY ID command that specifies a CDRSC major node, or
- A DISPLAY CDRSCS command requesting information about cross-domain resources defined to this domain.

The message lists the resource name *cdrscname*, its status *status*, and the name *cdrmname*, of the controlling CDRM. If the CDRM is not available, *cdrmname* will be *****NA*****.

cdrscnetid is the network ID of *cdrscname*. If the NETID is not available, *cdrscnetid* will be *****NA*****.

VTAM repeats this message as many times as needed to list all the cross-domain resources in this major node or domain. See the *z/OS Communications Server: IP and SNA Codes* for a description of *status*.

System Action: Processing continues.

Operator Response: None.

Programmer Response: None.

IST484I **SUBAREA =** *subarea* **[GATEWAY CONTROL** *function_type***]**

Explanation: VTAM issues this message as part of several different message groups in response to a DISPLAY ID command for information about a PU type 4, a DISPLAY ID,IDTYPE=RESOURCE or IDTYPE=DIRECTRY command for directory information for a logical unit, or a DISPLAY DIRECTRY command for directory information for a logical unit.

subarea is the subarea number of the resource (in decimal).

GATEWAY CONTROL *function_type* is displayed when the PU type 4 is gateway-capable and is in session with this host. *function_type* can be one of the following:

SHARED
Gateway functions are distributed between SSCPs.

EXCLUSIVE
Gateway functions are performed only by this SSCP.

System Action: Processing continues.

Operator Response: None.

Programmer Response: None.

IST486I **STATUS=** *currentstatus***, DESIRED STATE=** *desiredstate*

Explanation: VTAM issues this message as part of several different message groups in response to a DISPLAY ID , DISPLAY TRL, or DISPLAY TSOUSER command.

currentstatus is the current status of the node. See the *z/OS Communications Server: IP and SNA Codes* for a description of *currentstatus*.

desiredstate is the node state that is desired. See the *z/OS Communications Server: IP and SNA Codes* for a description of *desiredstate*. If VTAM cannot determine the desired state, *desiredstate* will be ***NA***.

System Action: Processing continues.

Operator Response: None.

Programmer Response: None.

IST487I *command2* **FOR ID =** *nodename* **SCHEDULED BY** *command1*

Explanation: VTAM issues this message when *command2* has been scheduled for *nodename*. *command1* is responsible for scheduling *command2*. For example, explicit deactivation of a peripheral node will cause implicit deactivation of that node's LUs.

System Action: Processing of *command2* continues.

Operator Response: None.

Programmer Response: None.

IST488I *command* **FOR ID =** *puname* **FAILED — DUPLICATE NODE:** *luname*

Explanation: VTAM rejected this VARY ACQ command because this domain already has an active resource named *luname*. VTAM cannot acquire physical unit *puname* until its logical unit *luname* has a unique name in this domain.

System Action: VTAM rejects the command.

Operator Response: Find the duplicate *luname* by entering a DISPLAY ID command for *luname*.

- If you cannot deactivate the major node containing this node because the major node is needed in the network, save the system log for problem determination.
- Otherwise, deactivate the duplicate *luname*'s major node and reenter the VARY ACQ command.

If the problem continues, save the system log for problem determination.

Programmer Response: If the resources with duplicate names are needed simultaneously, change the name of this domain's resource in both the NCP macros and the VTAM definition statements. This requires a partial NCP regeneration.

IST489I *command* **FOR ID =** *nodename* **CONTINUES – CANNOT DEFINE NODE:** *name*

Explanation: During processing of the *command*, VTAM determined that it cannot define *name* as a part of *nodename* for one of the following reasons:

- Adjacent control point *name* is not a valid node type.
- NCP frame relay switching equipment set (FRSESET) *name* has the same name as another FRSESET in this domain.
- Resource *name* contains one of the following errors:
  - *name* has the same name as another resource in this domain.
  - *name* has the same network address as another resource in this domain.
  - *name* has the same value for CPNAME as another resource in this domain.
  - *name* has the same value for LUALIAS as another resource in this domain.
  - *name* has the same values for IDBLK and IDNUM as another resource in this domain.
  - *name* is in an NCP major node definition, and there is a CDRM definition with the same SUBAREA address as the NCP major node definition.
  - *name* has a value for VNNAME that matches the value for CPNAME on a PU in this domain.
  - *name* has a value for VNNAME that refers to an ADJCP for which VN=YES is not specified.
  - *name* has the same transmission group number (TGN) as another resource in this domain.
- A pre-defined CDRSC is being activated when an MNPS application of the same name is already active on the node.
- Storage is not available to process the request.

See Chapter 14, "Command and RU types in VTAM messages" on page 685 for a description of *command*.

System Action: Processing of *command* continues. However, VTAM cannot use *name*.

Operator Response:

- This is usually a definition error. Enter a DISPLAY ID command for *name* to check for duplicate names. Save the system log for problem determination.
- If you cannot find a definition error, check for an insufficient storage problem by entering the DISPLAY BFRUSE command. Total VTAM private storage information is also displayed in message IST981I. Enter the DISPLAY STORUSE command to display storage usage for storage pools. Save the system log and request a dump for problem determination.

This message may be issued during session takeover processing. See the section on common APPN problems, the *z/OS Communications Server: SNA Diagnosis Vol 1, Techniques and Procedures* for a description of session takeover problems.

Programmer Response:

- If the definition failed because of a definition error, use the system log to assist you in correcting the problem. If there are duplicate operands on NCP and VTAM definition statements, you must change one or both of the duplicate statements if you want both resources to be defined at the same time. See the section on common subarea network problems, the *z/OS Communications Server: SNA Diagnosis Vol 1, Techniques and Procedures* for more information about this problem. See the *z/OS Communications Server: SNA Resource Definition Reference* for more information on VNNAME definitions.
- If the definition failed because of insufficient storage, increase storage as required for the VTAM address space.
  - See the *z/OS Communications Server: SNA Migration* to determine the storage requirements for VTAM.

– See the *z/OS Communications Server: SNA Operation* for information about the DISPLAY BFRUSE Command, and theDISPLAY STORUSE Command.
– See the *z/OS Communications Server: SNA Diagnosis Vol 2, FFST Dumps and the VIT* for information about analyzing dumps and about analyzing storage using the VIT analysis tool, if external trace is active.

IST490I *command2* **FOR ID =** *nodename* **FAILED — ***command1* **IN PROGRESS**

Explanation: Processing of *command1* causes VTAM to reject *command2* for *nodename* because *command1* takes precedence over *command2*. For example, the VARY REL command causes any subsequent VARY INACT for the same node to fail.

Note: If this message is displayed on a VARY ACT of an NCP with *command2* having the value **SSCP TKOVR** and *command1* having the value **INACT GVBK**, then the switched major node has not been activated before the NCP.

See Chapter 14, “Command and RU types in VTAM messages” on page 685 for a description of *command1* and *command2*.

System Action: Processing of *command1* continues, but VTAM rejects *command2*.

Operator Response: Monitor the progress of *command1* with DISPLAY commands. When *command1* processing has completed, enter the command required to achieve the desired network configuration or device.

In the above example, if you want *nodename* to be an active part of the network, enter a VARY ACQ command for *nodename* followed by a VARY ACT command for *nodename*. Save the system log for problem determination.

Programmer Response: Check the system log to determine the series of commands that caused the problem.

IST493I *command1* **FOR ID =** *nodename* **OVERRIDDEN BY** *command2*

Explanation: VTAM issues this message when *command2* for *nodename* overrides *command1*. This occurs even if *command1* was entered first.

VTAM might have issued *command2* when it could not complete *command1*. For example:

- A VARY INACT,TYPE=IMMED command for a physical unit causes VTAM to reject a VARY REL command for the same device. The VARY INACT,TYPE=IMMED command is processed, and the VARY REL command is not executed, because the release processing is part of the deactivation processing.

See Chapter 14, “Command and RU types in VTAM messages” on page 685 for descriptions of *command1* and *command2*.

System Action: Processing of *command2* continues. VTAM rejects *command1*.

Operator Response: VTAM cannot process *command1* and *command2* concurrently. *command1* is always rejected. Check the system log to determine the reason for the sequence in which the two commands were entered.

Programmer Response: None.

IST494I *command* **FOR ID =** *nodename* **FAILED — ALREADY IN DESIRED STATE**

Explanation: VTAM issues this message when the resource *nodename* was specified on the *command* but was already acquired in the desired state. For example, a VARY ACQ command was entered for *nodename* which specified a node that was already acquired.

System Action: VTAM rejects the command.

Operator Response: Ensure that *nodename* was entered correctly.

Programmer Response: None.

IST495I *type* **HAS BEEN SET TO** *value*

Explanation: VTAM issues this message when one of the following occurs:

- The operator entered the MODIFY TRACE,TYPE=VTAM command. The value specified on the SIZE operand of the command was less than the internal trace table default size of 50 pages.
- The operator entered a MODIFY VTAMOPTS,CSALIMIT or a MODIFY CSALIMIT command and the value specified was above the system CSA limit or was zero. This message is part of a group of messages. The first message is either IST1665I or IST1666I. See the explanation of the first message in the group for a complete description.
- The operator entered the CSALIMIT start option and the value specified was above the system CSA limit. This message is part of a group of messages. The first message is IST1665I. See the explanation of the first message in the group for a complete description.
- The operator entered a MODIFY VTAMOPTS,CSALIMIT, a MODIFY VTAMOPTS,CSA24, or a MODIFY CSALIMIT command and VTAM processed it successfully.

type is one of the following:

- **SIZE**, which indicates the default size of the VTAM internal trace table in pages.
- **CSALIMIT**, which indicates total CSA.
- **CSA24 LIMIT**, which indicates CSA below 24-bit addressable storage.

value is one of the following:

- If this message is in response to a MODIFY TRACE command, *value* is the default size of the internal trace table in pages and is always **50**.
- If *type* is CSALIMIT and the specified value was zero or was above the system CSA limit, *value* is set to the system CSA limit. Refer to the *z/OS Communications Server: SNA Resource Definition Reference* for more information about CSALIMIT and start options.
- If *type* is CSA24 LIMIT and the specified value was zero, *value* is NO LIMIT.
- Otherwise, *value* is the value specified on the command in kilobytes.

System Action:

- If this message is in response to a MODIFY TRACE command, the value specified on the SIZE operand is ignored, and the internal trace table size is set to 50 pages.
- If this message is in response to a MODIFY VTAMOPTS command for CSALIMIT or CSA24, or a MODIFY CSALIMIT command, VTAM's use of CSA will be limited to *value*.

Operator Response: None.

Programmer Response: None.

IST496E *function_name* **FUNCTION INOPERATIVE DUE TO ABEND**

Explanation: VTAM issues this message when several consecutive abnormal terminations have caused the VTAM function *function_name* to become inoperative.

function_name can be one of the following:

- **DYNAMIC CDRSC DELETION**
- **I/O RESPONSE MONITOR**
- **I/O RESPONSE TIMEOUT**

System Action: Processing continues. The cause of the repeated abends may also result in the failure of other VTAM operations.

Operator Response: Save the system log for problem determination.

- If *function_name* is **DYNAMIC CDRSC DELETION**, monitor the usage of dynamic cross-domain resources (CDRSCs) with the DISPLAY ID=ISTCDRDY,SCOPE=ALL command. Issue a VARY INACT command to delete CDRSCs that have no active sessions.
- If *function_name* is **I/O RESPONSE MONITOR**, monitor I/O response activity with the DISPLAY PENDING command.
- If *function_name* is **I/O RESPONSE TIMEOUT**, assess the importance of the pending I/O that is not receiving a response to determine whether VTAM should be restarted.

Programmer Response: You can correct any resulting failures of VTAM operations individually, but you may have to halt and restart VTAM if there are too many failures.

IST499I DISK FUNCTIONS FOR *ncpname* NOT PERFORMED

Explanation: This message is the first in a group of messages that VTAM issues in response to one or both of the following:

- A VARY ACT command that specified LOADFROM, SAVEMOD, or DUMPLOAD for NCP *ncpname*
- A PCCU definition statement that specified LOADFROM, SAVEMOD, or DUMPLOAD for NCP *ncpname*.

A full description of the message group follows.

```
IST499I  DISK FUNCTIONS FOR ncpname NOT PERFORMED
IST523I  REASON = reason
```

reason in message IST523I is one of the following:

LOAD NOT NECESSARY
The operator entered a VARY ACT command specifying LOAD=U. Because no load occurs, the functions are not set in NCP *ncpname*.

CCU NOT CORRECT LEVEL
NCP NOT CORRECT LEVEL
SSP NOT CORRECT LEVEL
The controller (CCU), NCP, or SSP does not support the function requested. An NCP release prior to NCP V5R2 cannot be loaded with the LOADFROM, SAVEMOD, or DUMPLOAD operands. These operands are valid only for NCP V5R2 or a later release.

System Action: Activation continues. The LOADFROM, SAVEMOD, and DUMPLOAD operands are ignored.

Operator Response:

- If VTAM issued this message in response to a VARY ACT command **and** *reason* is **LOAD NOT NECESSARY**, you must enter a VARY ACT command, specifying LOAD=YES *if* you want the new functions to be set in NCP *ncpname*.

  For all other *reason*s, save the system log for problem determination.
- If you did not enter a VARY ACT command, notify the system programmer.

Programmer Response: Ensure that the NCP, SSP, and CCU are at the correct level. To use the LOADFROM, SAVEMOD, and DUMPLOAD operands on the VARY ACT command, the NCP must be NCP V5R2 or a later release, and the SSP must be SSP V3R4 or a later release.

IST507I *name* NOT ACTIVE, TSO TRACE REQUEST IGNORED

Explanation: VTAM issues this message in the following situations:

- A MODIFY TRACE,TYPE=TSO command was entered to request a TSO/ VTAM TGET/TPUT/TPG trace for a user ID *name* that is not logged on to TSO/VTAM.
- A DISPLAY TRACES,TYPE=TSO command was entered, and TSO was not active. *name* is **TSO**.
- A DISPLAY TRACES,TYPE=TSO,ID=*name* command was entered, and the specified TSO user ID was not active.

System Action: VTAM rejects the command. Other processing continues.

Operator Response:
- If *name* is a TSO user ID, verify that the user ID is spelled correctly, and reenter the command.
- If *name* is **TSO**, verify that TSO is active, and start if necessary.

Programmer Response: None.

IST510I ROUTE TEST *displayid* FAILED — ERS NOT DEFINED

Explanation: This message follows a message displaying route status when TEST=YES is specified on the DISPLAY ROUTE command, and the route display returns a status of UNDEFINED for all ERs in the display, indicating there are no ERs to test.

The display identification number *displayid* corresponds to the route display number in the previous message.

System Action: Processing continues.

Operator Response: None.

Programmer Response: None.

IST511I TRACE REQUEST FAILED — *nodename* INVALID

Explanation: VTAM issues this message in response to a MODIFY TRACE command or TRACE start option. The trace that VTAM attempted for resource *nodename* failed because *nodename* does not exist or is not valid for the type of trace requested.

If the node name is CNMSTATE, this indicates that the communication manager (for example, NetView) is not active, but must be active for the trace requested to be successful.

System Action: VTAM rejects the command.

Operator Response: Ensure that you entered *nodename* correctly. If problems persist, verify that *nodename* is valid for the type of trace requested.

For information on the MODIFY TRACE command or TRACE start option, see *z/OS Communications Server: SNA Operation*.

Programmer Response: None.

IST512I TRACE TERMINATED FOR NODE = *nodename* [ALSNAME = *alsname*]

Explanation: VTAM issues this message in response to a MODIFY NOTRACE command when VTAM has stopped the trace activity on resource *nodename*. If the SCOPE=ALL operand was specified on the command, VTAM also stops all traces on resources subordinate to *nodename*.

Note: If you specify or accept the default value BASE for the MSGLVL option, you receive this message twice if the resource is the host SSCP. See Appendix D, “Messages affected by the MSGLVL option” on page 757 for additional information.

ALSNAME = *alsname* is displayed if *nodename* is an independent LU. *alsname* is the name of the adjacent link station (ALS) over which LU *nodename* is traced.

System Action: VTAM stops tracing *nodename*. Processing continues.

Operator Response: None.

Programmer Response: None.

IST513I TRACE INITIATED FOR NODE *nodename* [ALSNAME = *alsname*]

Explanation: VTAM issues this message in response to a MODIFY TRACE command or a START command with the TRACE option when VTAM has successfully initiated trace activity for resource *nodename*. If the SCOPE=ALL operand was specified on the MODIFY TRACE command or EVERY was specified on the START command, VTAM initiates traces on all resources subordinate to *nodename*.

Note: If you specify or accept the default value BASE for the MSGLVL option, you receive this message twice if the resource is the host SSCP. See Appendix D, “Messages affected by the MSGLVL option” on page 757 for additional information.

ALSNAME = *alsname* is displayed if *nodename* is an independent LU. *alsname* is the name of the adjacent link station (ALS) over which LU *nodename* is traced.

System Action: VTAM starts tracing *nodename*.

Operator Response: None.

Programmer Response: None.

IST516I DESTSUB ADJSUB TGN ER ER STATUS VR(S)

Explanation: This message is the first in a group of messages that VTAM issues in response to a DISPLAY PATHTAB command. A full description of the message group follows.

```
IST516I  DESTSUB ADJSUB TGN ER  ER STATUS  VR(S)
IST517I   destsa adjsa  tgn er    status   vrlist
:
IST1454I count PATH(S) DISPLAYED
IST314I  END
```

Message IST516I serves as a header line for the display and identifies the type of information shown in the display.

VTAM issues message IST517I for each ER table entry to be displayed. It contains a user-defined list of the virtual routes that map to the explicit routes. It also contains the following information about explicit routes known to this host:

destsa Destination subarea in which the listed explicit route terminates.

adjsa Adjacent subarea through which the listed explicit route passes.

tgn Transmission group number.

er Explicit route number.

status Current state of the listed explicit route as known to this host. For virtual routes that specify explicit routes with no table entry, *status* is **UNDEF**. (In this case, the value of *adj* is blank.)

status can be any of the following:

ACTIV3
The ER is active.

The explicit route has been defined to VTAM in a path definition set, is physically available to the network, and has been activated by this node or by both this node and the node at the other end of the route. A route test (TEST=YES option) should succeed, because physical connectivity exists along the entire route in this state.

INACT
The VR is inactive.

The virtual route has been defined to VTAM in a path definition set, but is not currently active or is pending active. It will be automatically activated when it is needed for a session.

INOP
The ER is inoperative.

The explicit route has been defined to VTAM in a path definition set, but is not physically available to the network. That is, connectivity does not exist along the entire route. A route test (TEST=YES option) will fail, because the explicit route does not have physical connectivity.

PACT
The VR is pending active.

The virtual route has been defined to VTAM in a path definition set and is in the process of being activated by this node.

PDEFA
The ER is “pending definition—active”.

The explicit route is physically available to the network, and activation has been attempted by the node at the other end of the route, but the route has not yet been defined to VTAM in a path definition set. The route is automatically activated by this node when an appropriate path definition set is processed. A route test (TEST=YES option) can succeed, even though the explicit route is not defined in this host. The purpose of the test is to provide information on the physical connectivity of the explicit route so that the operator can decide whether or not to define the route. In order for VTAM to carry session message traffic, the explicit route must be defined to VTAM.

PDEFO
The ER is “pending definition—operative”.

The explicit route is physically available to the network, but it has not yet been defined to VTAM in a path definition set. A route test (TEST=YES option) can succeed, even though the explicit route is not defined in this host. The purpose of the test is to provide information on the physical connectivity of the explicit route so that the operator can decide whether or not to define the route. In order to be used by VTAM to carry session message traffic, the explicit route must be defined to VTAM.

UNDEF
The ER is undefined.

The explicit route has not been defined to VTAM in a path definition set and is not physically available to the network. A route test (TEST=YES option) will always fail, because the explicit route is neither defined to VTAM nor operative.

vrlist User-defined virtual route numbers that map onto the listed explicit route.

IST1454I

count is the total number of paths displayed.

System Action: Processing continues.

Operator Response: The status may be used for information only or may indicate that operator action is necessary if any status does not meet expectations. In particular, a virtual route or an explicit route with a status of UNDEF might indicate that a path definition set should be activated. An explicit route with a status of INOP might indicate that a subarea node, a cross-subarea link, or a cross-subarea link station should be activated, or that there is some network problem with a node, link, or link station.

Programmer Response: None.

IST517I *destsa adjsa tgn er status vrlist*

Explanation: This message is part of a group of messages that VTAM issues in response to a DISPLAY PATHTAB command. The first message in the group is IST516I. See the explanation of that message for a complete description.

IST520I **UNABLE TO PROCESS** *runame* **{REQ|RSP} [FROM** *fromnetid***] [TO** *tonetid***]**

Explanation: This message is the first in a group of messages that VTAM issues in response to a lack of storage, the abnormal termination of a VTAM program, or an RU received out of sequence. A complete description of the message group follows.

- If the reason is insufficient storage or a VTAM program abend, the following message group is displayed.

```
 IST520I  UNABLE TO PROCESS runame {REQ|RSP} [FROM fromnetid] [TO tonetid]
[IST531I  FROM SUBAREA = subarea, ELEMENT = element]
[IST531I  TO SUBAREA = subarea, ELEMENT = element]
 IST523I  REASON = reason
```

- If the reason is an RU received out of sequence, the following message group is displayed.

```
 IST520I  UNABLE TO PROCESS runame {REQ|RSP} [FROM fromnetid] [TO tonetid]
 IST1694I REASON = SEQUENCE NUMBER ERROR
 IST314I  END
```

IST520I

tonetid cannot process the request or response unit (RU) *runame*. See Chapter 14, “Command and RU types in VTAM messages” on page 685 for a description of *runame*. If *runame* is not in Chapter 14, “Command and RU types in VTAM messages” on page 685, it is the 3-byte network services header of an RU preceded by a 1-byte category code.

The origin and destination of *runame* are identified by either their:

– Network names (*fromnetid* and *tonetid*) as displayed in message IST520I; or

– Network addresses (subarea address *subarea* and element address *element*) as displayed in message IST531I.

IST531I

IST521I

VTAM will not display message IST531I if both **FROM** network name *fromnetid* and **TO** network name *tonetid* are known to VTAM. VTAM will display it once if one of the network names is unknown and twice if both of the network names are unknown. If the subarea and element addresses are unknown, VTAM issues either **0** or ***NA*** in place of the address.

IST523I

The *reason* in message IST523I can be any of the following:

INSUFFICIENT STORAGE

VTAM PROGRAM ABEND

IST1694I

VTAM will display message IST1694I if the sequence number field in the TH of the RU is not the sequence number that VTAM expected.

System Action: Processing continues. Because VTAM cannot process *runame*, other VTAM operations may fail.

Operator Response: Save the system log for problem determination.

Programmer Response: For REASON = INSUFFICIENT STORAGE

- Verify that the operator entered the buffer pool or CSA start options as specified in the start procedures.
- Increase storage as required. For insufficient storage errors, you might want to redefine your buffer pool or CSA limits. If the start option cannot be modified using the MODIFY VTAMOPTS command, you must modify the VTAM start options file (ATCSTRxx) and restart VTAM to use the start option.
- See the *z/OS Communications Server: SNA Migration* to determine the storage requirements for VTAM.
- See the *z/OS Communications Server: SNA Resource Definition Reference* for a description of VTAM start options.
- See the *z/OS Communications Server: SNA Operation* for information about the DISPLAY BFRUSE Command, the DISPLAY STORUSE Command, and the MODIFY VTAMOPTS Command.
- See the *z/OS Communications Server: SNA Network Implementation Guide* for an explanation and description of buffer pools and for general information on buffer pool specification and allocation.

For REASON = VTAM PROGRAM ABEND

- See the *z/OS Communications Server: SNA Diagnosis Vol 2, FFST Dumps and the VIT* for information about analyzing dumps and about analyzing storage using the VIT analysis tool, if external trace is active.

For REASON = SEQUENCE NUMBER ERROR

- Investigate why *fromnetid* sent an RU out of sequence. If you suspect an ongoing problem, you may want to inactivate the session between *fromnetid* and *tonetid*. See the section on non-VTAM problems in the *z/OS Communications Server: SNA Diagnosis Vol 1, Techniques and Procedures* for additional problem determination actions.

IST521I GBIND {FAILED|QUEUED} FOR COS *cosname* **[FROM** *fromname***] [TO** *tonetid***]**

Explanation: This message is the first in a group of messages. A complete description of the message group follows.

```
 IST521I  GBIND {FAILED|QUEUED} FOR COS cosname [FROM fromname] [TO tonetid]
[IST531I  FROM SUBAREA = subarea,ELEMENT = element]
[IST531I  TO SUBAREA = subarea,ELEMENT = element]
[IST531I  VIA gatewayncp]
[IST531I  VIA SUBAREA gwnsubarea]
 IST528I  VIRTUAL ROUTE NUMBER vrlist
 IST523I  REASON = reason
```

A generic BIND (ACTPU, ACTLU, ACTCDRM, or BIND) was queued or rejected because a virtual route was unavailable. An ACTPU, ACTLU, or ACTCDRM, sent by an SSCP to bind sessions, is queued if some virtual routes are defined, but not yet operative. Generic BINDs require virtual routes that are defined and operative, and that can be made active.

If a GBIND fails because no routes were activated, one or more virtual routes in the class-of-service (COS) VR list (possibly modified by the virtual route selection exit routine) were defined and operative but could not be successfully

activated (that is, either the virtual route itself or its associated explicit route could not be activated). This includes the case where the prospective session had a migration requirement for explicit route zero from the SLU to the PLU. This requirement could not be satisfied from the routes within the COS.

If a GBIND fails because no routes were operative, one or more virtual routes in the VR list were defined but not operative.

If a GBIND fails because no routes were defined, no routes in the VR list were defined. Likewise, certain GBINDs may be queued for the same reason, except that a GBIND will not be queued if no routes to the destination subarea are defined.

If a GBIND fails because of a VR selection-exit routine error, the virtual-route-selection exit routine modified the VR list from the COS to the extent that none of the exit-selected routes was usable. At least one virtual route identifier *vrlist* was outside the proper numeric bounds for a VR number (0–7) or transmission priority (0–2), or none of the virtual routes was defined.

The *vrlist* shown in message IST528I is a list of virtual route numbers (regardless of transmission priority) associated with the GBIND at the time of the queueing or failure. If failure occurs before, during, or as a result of the virtual route selection exit routine, the list is from the COS. Otherwise, the list will appear with any modifications made by the exit routine, if the exit routine is allowed modifications.

The origin and destination of the generic BIND are identified by one of the following:

- Network names (*fromname* and *tonetid*) as displayed in message IST521I
- Network addresses (subarea number *subarea* and element number *element*) as displayed in message IST531I
- Gateway network name (*gatewayncp*) as displayed in message IST531I
- Gateway network address (subarea number *gwnsubarea*) as displayed in message IST531I.

reason in message IST523I can be any of the following:

NO ROUTES DEFINED

NO ROUTES OPERATIVE

NO ROUTES ACTIVATED

VR SELECTION EXIT ERROR—UNDEFINED ROUTES

VR SELECTION EXIT ERROR—INVALID ROUTES

Notes:

1. VTAM will not issue message IST531I if both **FROM** network name *fromname* and **TO** network name *tonetid* are known to VTAM and provided in message IST521I. VTAM issues it once if one of the network names is unknown and twice if both of the network names are unknown. If the subarea and element addresses are unknown, VTAM issues either **0** or ***NA*** in place of the address.
2. VTAM issues message IST531I specifying gateway information only if the failed or queued generic BIND was cross-network.

If the GBIND is an ACTCDRM for an SSCP in another network, VTAM issues message IST531I to specify the names of the gateway node (GWN) through which the ACTCDRM will be sent to the adjacent network when the virtual route to that gateway node (GWN) becomes available.

For a CDRM or CDRSC in another network, the gateway node name *gatewayncp* is given for the gateway node through which the bind request will be sent to the adjacent network. If the name of the gateway node is unknown, the subarea number of the gateway node is given.

COS is a designation of the path-control network characteristics, such as path security, transmission priority, and bandwidth, that apply to a particular session. If the class-of-service name *cosname* does not appear in message IST521I, VTAM used the default class-of-service entry.

System Action: Processing continues, but the session setup either fails or awaits the availability of an applicable virtual route.

Operator Response: If a route-activation failure caused a GBIND failure, VTAM issued previous messages to

describe the route-activation failure. Correct the problem described in those messages. Re-attempt the GBIND by the SSCP or application program.

If a GBIND failure occurred because no routes were operative, use the DISPLAY ROUTE command, specifying TEST=YES, to test the applicable routes and determine where the outage is. Establish connectivity along the full length of the route.

If a GBIND failure occurred because no routes were defined, activate the appropriate path decks to define the applicable routes.

If VTAM issued IST531I to specify the name of a gateway node (GWN) through which VTAM will send the ACTCDRM to the adjacent network, and if a different GWN subsequently becomes available, use the VARY INACT command, followed by the VARY ACT command, to activate the CDRM through the newly available GWN.

Queuing of an SSCP session request may be normal if separate activation of network nodes or links or both is proceeding. If such other activations are not in progress, or if the GBIND remains queued for an extended period (indicated by subsequent appearances of message IST530I), a problem may exist. Route testing may be appropriate. Cancel the queued session request by deactivating the resource with which the SSCP was “binding” a session.

If a virtual-route-selection exit routine error caused a GBIND failure, either there is a programming error in that exit routine or the routes expected to be available to the exit routine have not been defined. If the former, halt VTAM and have the system programmer fix and replace the exit routine module. If the latter, activate the appropriate path decks to define the applicable routes.

Programmer Response: If route definitions are the cause of the problem, supply the operator with the appropriate path decks. If the virtual-route-selection exit routine is the cause of the problem, fix it and reinstall the exit routine in VTAM.

For information about network routing, see the *z/OS Communications Server: SNA Network Implementation Guide*.

For information about VTAM routes, see the *z/OS Communications Server: SNA Resource Definition Reference*.

IST522I {ER|VR} *n* **ACT {FAILED|REJECTED} SA** *subarea1* **TO SA** *subarea2* **[FOR TP***i***]**

Explanation: This message is the first in a group of messages that VTAM issues for one of these conditions:
- A virtual or explicit route activation initiated by this VTAM node failed in the network.
- An activation request received from the network by this VTAM node was rejected.

A complete description of the message group follows.

```
 IST522I {ER|VR} n ACT {FAILED|REJECTED} SA subarea1 TO SA subarea2 [FOR TPi]
 IST523I  REASON = reason
[IST524I  REVERSE ER MASK = ermask]
[IST525I  REJECTING SA subarea3 USING TG tg ADJACENT SA subarea4]
```

Note: FOR TP*i* appears only when **VR** *n* appears.

For an explicit route activation:

IST522I

This message indicates that the activation was rejected if the reason for the failure is in this node, or indicates that the activation failed if some node along the route could not permit the activation.

n indicates the one or two-digit ER number.

subarea1 and *subarea2* are decimal subarea numbers specifying, respectively, the node that began the route activation and the node at the other end of the route.

IST523I

This message indicates the problem in the rejecting node.

reason may be one of the following:

A REQUIRED TG IS INACTIVE
A required transmission group (TG) is not active somewhere along the path of the route.

EXPLICIT ROUTE NOT DEFINED
The explicit route is not defined (in the forward direction).

EXPLICIT ROUTE NOT REVERSIBLE
A useable explicit route in the reverse direction cannot be found (because of an incompatible definition or no definition in the reverse direction).

EXPLICIT ROUTE LENGTH EXCEEDS MAXIMUM
The explicit route has a length in excess of the maximum possible length (that is, a routing loop exists).

MIGRATION NODE DOES NOT SUPPORT THIS ER
The adjacent subarea NCP or VTAM does not support extended subarea addressing and the explicit route being activated has an origin or destination subarea greater than 255, or an explicit route number greater than seven.

UNEXPECTED TYPE BYTE X'*nn***'**
An unrecognizable failure code *nn* was received from the rejecting node.

IST524I

ermask is the reverse explicit route *mask* as received in an NC_ER_ACT or NC_ER_ACT_REPLY RU. This mask indicates the explicit route numbers for flow in the direction opposite the direction of ER *n*.

If the explicit route activation failed in the network, VTAM issues message IST525I, indicating the transmission group identifier (*tg*) at the point of rejection.

IST525I

subarea3 is the subarea address of the network node rejecting the activation.

tg is the number of the transmission group to or from an adjacent node.

subarea4 is the subarea address of the applicable adjacent node.

Note: The transmission group number or the subarea number of the adjacent node or both may be zero if these numbers are unknown to the rejecting node.

For a virtual route activation, messages IST522I, IST523I, and (sometimes) IST524I will appear.

Note: This message group will appear only once in a display, though multiple sessions may attempt to establish routing from *subarea1* to *subarea2.*

IST522I

n indicates the one-digit virtual route number.

subarea1 and *subarea2* specify, respectively, the node that began the route activation and the node at the other end of the route.

TP*i* is the transmission priority of the route activation.

IST523I

This message indicates the problem in the rejecting node.

reason may be one of the following:

ACTVR RESPONSE SENSE IS *sense*
The node that began the route activation sent the **REASON** information. See the *z/OS Communications Server: IP and SNA Codes* for additional information on sense codes.

UNDEFINED EXPLICIT ROUTE REQUESTED
The explicit route defined for use with the virtual route is undefined in this node.

INCORRECT EXPLICIT ROUTE REQUESTED
The node at the other end of the route specified one or more reverse explicit route numbers that are inconsistent with the route definitions in this node.

VIRTUAL ROUTE NOT DEFINED
The virtual route is not defined.

IST524I

ermask is the reverse explicit route *mask* as received in an NC_ER_ACT or NC_ER_ACT_REPLY RU. This mask indicates the explicit route numbers for flow in the direction opposite the direction of ER *n*.

System Action:

- If this VTAM node rejected a route-activation attempt from another network node, processing continues with no effect on this node.
- If a route activation initiated by this node failed, then some other network node rejected the route-activation request. The failing host continues processing the generic BIND that caused the activation attempt, and places it on some other available route within its requested COS.
- If no routes are available, the generic BIND fails or is queued to wait for a usable route.

Operator Response:

For a route-activation indicated as FAILED:

- The problem is probably at the node that rejected the route-activation RU.
- If message IST525I is present, it identifies the rejecting node.
- If message IST525I is not present (as for a virtual route activation failure), the node at the far end of the route *subarea2* is the rejecting node.
- If an explicit route activation failed because it requires a currently inactive transmission group (TG) in order to complete the route's physical connectivity, the TG may be activated if the node containing the inactive TG is active or can be made active to this VTAM. Otherwise, call the operator of whatever host owns the node containing the inactive TG and request activation of the TG.
- If route activation failed because it is a migration ER0 that is not supported by VTAM, this is probably a route-definition error. Bring this to the attention of your system programmer.

For a route-activation indicated as REJECTED:

- If message IST522I indicates this VTAM node rejected a route-activation RU, the problem is in this node. With the following exceptions, your system programmer will need to be informed. The exceptions are:
  - When an ER activation was rejected because the ER is not reversible.
  - When a VR activation was rejected because the VR is not defined. (An ER that is "not reversible" either is not defined or is incompatibly defined in the reverse direction, that is, in the direction from the rejecting VTAM node issuing this message to the node originating the ER activation.)

  In these cases, an appropriate path definition set may be activated to cause the applicable route to become properly defined.

Programmer Response: The information in this group of messages is basically that which appears in the NC_ER_ACT, NC_ER_ACT_REPLY, or NC_ACTVR request units, or the sense information that may appear in the NC_ACTVR response unit.

If this host rejected a virtual route's activation because an incorrect explicit route was requested, you may or may not be able to resolve the problem. The situation is one of the following:

- The explicit route for the subject virtual route is defined on a physical path different from that defined at the other end of the route (that is, inconsistent route definitions).
- The applicable path deck has only recently been activated, and the other end of the route has tried to activate a virtual route before being notified of one or more new explicit route definitions. Because this is a timing problem, there is no action that you can take. The next attempt to activate the virtual route should succeed.

IST523I REASON = *reason*

Explanation: This message is part of several message groups. See the explanation of the first message in the group for a complete description.

IST524I REVERSE ER MASK = *ermask*

Explanation: This message is part of a group of messages. The first message is IST522I. See the explanation of that message for a full description.

IST525I REJECTING SA *subarea3* **USING TG** *tg* **ADJACENT SA** *subarea4*

Explanation: This message is part of a group of messages. The first message is IST522I. See the explanation of that message for a full description.

IST526I ROUTE FAILED FROM *subarea1* **TO** *subarea2* **— DSA** *destsubarea* **— NETID** *netid*

Explanation: A transmission group between subarea number *subarea1* and subarea number *subarea2* has become inoperative. *destsubarea* is the subarea number of the destination of the route in network *netid*.

System Action: Processing continues. VTAM terminates all sessions using this explicit route. An affected session may be reinitiated by the session partners if alternate routes are available to them.

Operator Response: If the outage is the result of physical failure, save the system log for problem determination. If the outage is a result of some operator action in the network and was not expected, contact the operators controlling the reporting node or its adjacent node or both, to coordinate your actions.

Note: If the system programmer requests more information about a certain explicit route, you may supply it by issuing the DISPLAY ROUTE,TEST=YES command, specifying either *subarea1* or *subarea2* (whichever is appropriate) as the destination subarea number. If the virtual route numbers affected by this outage and the number of the transmission group number are desired, you may obtain that information by issuing the DISPLAY ROUTE,TEST=YES command, specifying *destsubarea* as the destination subarea number. If only the virtual route numbers are desired, the TEST=YES operand may be omitted.

Programmer Response: If a network failure is involved, repair the network and restore the route.

IST528I VIRTUAL ROUTE NUMBER *vrlist*

Explanation: This message is part of a group of messages. The first message is IST521I, IST744I, or IST746I. See the explanation of those messages for a full description.

IST529I VR SELECTION EXIT *reason* **[AND IS NOW INACTIVE]**

Explanation: The virtual-route-selection exit routine has terminated.

reason can be one of the following:

ABENDED WITH CODE *code*
The VR exit selection subtask, ISTPUCX0, abnormally terminated with hexadecimal abend code *code*. See the *z/OS MVS System Codes* for more information.

EXCEEDED ABEND THRESHOLD
The VR exit selection subtask, ISTPUCX0, abnormally terminated more than four times in less than four minutes.

REQUESTED TERMINATION
The exit routine requested its own termination by specifying a nonzero return code when it returned control to VTAM.

IS NOT OPERATIVE DUE TO A LACK OF STORAGE
The exit routine became inoperative because of a lack of storage.

System Action: Processing continues. If the exit routine has abended but has not exceeded its abend threshold, VTAM reinstates the exit routine. If the abend threshold was exceeded or the exit routine requested termination, VTAM stops using the exit routine and performs virtual route selection for session requests strictly on the basis of the requested class of service.

Operator Response: Save the system log for problem determination.

Programmer Response: If the virtual route selection exit routine abended, there is probably a programming error in the exit routine. You can replace the exit routine with the corrected version by using the MODIFY EXIT command. See *z/OS Communications Server: SNA Operation* for information on the MODIFY EXIT command.

If the exit routine requested its own termination, there may be a programming error.

IST530I *runame* **PENDING FROM** *fromnetid* **TO** *tonetid* **FOR** *fornodename*

Explanation: This message is the first in a group of messages that VTAM issues when the request unit (RU) *runame* has been pending on the resource *fornodename* for a period of time without receipt of a corresponding response unit. A complete description of the message group follows.

```
 IST530I  runame PENDING FROM fromnetid TO tonetid FOR fornodename
[IST531I  FROM SUBAREA = subarea, ELEMENT = element]
[IST531I  TO SUBAREA = subarea, ELEMENT = element]
 IST1051I EVENT CODE = code
 IST1062I EVENT ID = eventid
```

Note: If *runame* remains outstanding for subsequent intervals, these messages will be repeated at such intervals until *runame* is received or until the request unit is purged.

IST530I

runame is the request unit (RU) that is pending. See Chapter 14, “Command and RU types in VTAM messages” on page 685 for a description of *runame*.

The origin and destination of *runame* are identified by one of the following:

– Network names (*fromnetid* and *tonetid*) as displayed in this message.

– Network addresses (subarea number *subarea* and element number *element*) as displayed in message IST531I.

IST531I

VTAM will not issue this message if both **FROM** network name *fromnetid* and **TO** network name *tonetid* are displayed in this message.

VTAM will display this message once if one of the network names is unknown and twice if both of the network names are unknown.

If the subarea and element addresses are unknown, VTAM issues either **0** or ***NA*** in place of the address.

IST1051I

code is an event code that identifies which format of event ID is being displayed. See the *z/OS Communications Server: IP and SNA Codes* for a description of *code*.

IST1062I

eventid is an internal VTAM identifier of the pending request. See the *z/OS Communications Server: IP and SNA Codes* for a description of *eventid*.

System Action: Processing continues, awaiting the corresponding response unit.

Operator Response: This message group indicates that a problem **may** exist. The longer an RU remains outstanding (that is, the more often these messages reappear for the same RU), the more likely it is that a problem exists.

If a particular RU remains outstanding for an extended period of time, display the node for which the I/O is pending, and save the system log for problem determination.

If *runame* is **CHAR CODED**, this message group indicates that VTAM sent a USSMSG to the LU and is waiting for a response. To correct the situation, enter a VARY INACT command for the resource *fornodename* and then enter a VARY ACT for the same resource.

You can use the MODIFY IOPD command to change the time-out interval controlling the display of this message. See the *z/OS Communications Server: SNA Operation* for additional information.

Programmer Response: See the *z/OS Communications Server: SNA Diagnosis Vol 1, Techniques and Procedures* for corrective actions for the common problems.

- If *runame* is **CD DSEARCH**, this message group may indicate one of the following problems:
  – A low IOINT value and no ADJSSCP table values were coded.
  – The DYNASSCP start option and the ADJSSCP table are not properly tuned.

- If *runame* is **CHAR CODED**, this message group indicates that VTAM sent a USSMSG to the LU and is waiting for a response. This is usually a device problem. A frequent cause of this error is when a user powers off the terminal without logging off first. To correct the situation, enter a VARY INACT command for the resource *fornodename* and then enter a VARY ACT for the same resource.
- If *runame* is **GUNBIND** and the message is received at log off time in a cross domain environment, this message group indicates that one of the following probably occurred:
  - The application did not issue a CLSDST macro.
  - The device sent an incorrect response or no response to the UNBIND RU.
- If *runame* is **NMVT**, this message group may indicate that the device is not real-time-monitor-capable. This means that the device did not process the response and return the requested information properly to the NetView program for most devices, or to the RISC System/6000* network management program for RISC System/6000 devices. A microcode change is needed to permanently resolve this problem.

See the *z/OS Communications Server: SNA Diagnosis Vol 1, Techniques and Procedures* for information on the wait procedure.

IST531I **{{FROM|TO} SUBAREA =** *subarea*, **ELEMENT =** *element*|**VIA** *gatewaynetid*|**VIA SUBAREA** *gwnsubarea***}**

Explanation: VTAM issues this message as part of a message group. See the explanation of the first message in the group for a complete description.

IST533I **ER** *er* **{SUCCEEDED|FAILED} IN ROUTE TEST** *routetest*

Explanation: This message is the first of a group of messages. A complete description of the message group follows.

```
 IST533I  ER er {SUCCEEDED|FAILED} IN ROUTE TEST routetest
 IST797I      FROM   VIA     ADJACENT      DEST     ER LENGTH
 IST644I    originpu    TG    [adjnode]    destpu
 IST534I    originsa   [tg1]   [adjsa]     destsa   erlength
[IST798I       netid        ]
[IST572I   REJECTING   TG  ADJACENT     ER MASK]
[IST816I     rejsa     tg2 rejadjsa      ermask]
 IST523I  REASON = reason
```

VTAM performed a route test on an explicit route, *er*. VTAM receives the results of the route test and displays the information in this message group. A route test and its results were **unsolicited** if the route test number *routetest* (in message IST533I) is zero. Otherwise, they were **solicited** as a result of a DISPLAY ROUTE command in which the TEST=YES option was specified. For the solicited route test, *routetest* is the route test number that corresponds to the route status display number in the message IST535I group (which should have already been displayed as a result of the DISPLAY ROUTE command).

The explicit route, *er*, that succeeded or failed in the route test:

- Originated in node *originpu*, subarea number *originsa*, in network *netid*. If name of the origin physical unit is not available, *originpu* will appear as *****NA***** (not available).
  - *originpu* is the node specified by the ORIGIN operand of the DISPLAY ROUTE command or used by default.
  - *netid* is displayed. It is the network ID specified either by the NETID parameter of the DISPLAY ROUTE command or in the NETID start option (during initialization of VTAM).
- Flowed through adjacent node *adjnode*, subarea number *adjsa*. *tg1* is the transmission group number defined to the link to the adjacent subarea, *adjsa*.
  - If the route test was unsolicited, the adjacent node does not pertain to the flow and, therefore, *adjnode*, *adjsa*, and *tg1* will not be displayed. If the node name is not known, *adjnode* will be displayed as *****NA***** (not available).
- Was destined for node *destpu*, subarea number *destsa*.
  - *destsa* is the destination subarea number specified by the DESTSUB operand of the DISPLAY ROUTE command. If the node name has not been defined for it, *destpu* will be displayed as *****NA***** (not available).

erlength is the length of the explicit route in terms of the number of transmission groups traversed during the test.

IST533I

An explicit route completes a route test successfully if the route test request is successfully forwarded to and returned from the other end of the route. In order for this to occur, a physical connection must exist along the entire length of the route, with proper route definitions in each intermediate node and in the end node.

If the explicit route failed in the test:

- It was rejected by the node with subarea number *rejsa*, adjacent to subarea number *rejadjsa* through transmission group number *tg2*. *rejadjsa* or *tg2* or both may be zero if they are not known to the rejecting node.
- *ermask* is a hexadecimal 4-digit mask representing operative routes in the direction opposite the direction of the explicit route *er*. The first 8 bits represent ERs 0–7. If mask is 0, the ER is not reversible.
- It was rejected for one of the following values of *reason*:

  A REQUIRED TG IS INACTIVE
  The explicit route requires a transmission group that is not currently active somewhere along the path of the route.

  ER EXCEEDS MAXIMUM LENGTH
  The explicit route had a length in excess of the maximum possible length (that is, a routing loop may exist).

  ER NOT DEFINED
  The explicit route was not defined in the forward direction.

  ER NOT REVERSIBLE
  The explicit route was not reversible because of an incompatible definition or no definition in the reverse direction.

  MIGRATION ER NOT SUPPORTED
  A migration node was encountered. Migration nodes do not support ER or VR protocols. ER0 may not be used.

  MIGRATION NODE DOES NOT SUPPORT THIS ER
  The adjacent subarea NCP or VTAM does not support extended subarea addressing and the explicit route being activated has an origin or destination subarea greater than 255, or an explicit route number greater than seven.

  MIGRATION NODE ENCOUNTERED
  A migration node was encountered. Migration nodes do not support ER or VR protocols. ER0 may be used.

  UNEXPECTED TYPE BYTE X'nn'
  a reason code, *nn* (expressed in hexadecimal), was received from the rejecting node, and VTAM does not recognize that reason code.

The following is an illustration of a typical route failure:

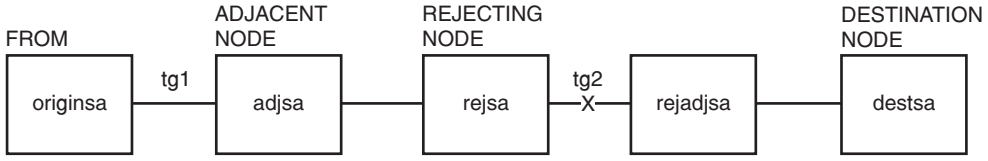

Figure 3. Typical route failure

Note: Messages IST572I and IST816I do not appear for a route test that completed successfully.

System Action: Processing continues, regardless of the route-test results, with no effect on this host.

Operator Response: If the explicit route completed the route test successfully, VTAM can use the route for routing session message traffic (provided the explicit route and an associated virtual route are defined to VTAM). No operator response is necessary unless route definitions are required, in which case the appropriate path definition sets may be activated.

If the explicit route failed the route test, an operator response may not always be necessary, but in order for VTAM to carry session message traffic on this explicit route, it must be properly defined to VTAM and all nodes on the route must support the explicit and virtual route protocols. The route-status display (message group IST535I corresponding to *routetest*) lists the defined or undefined status of the explicit route within this host.

If the explicit route failed the route test because of an inactive transmission group:

- You may activate the links connecting the rejecting subarea *rejsa* to its adjacent node of subarea *rejadjsa*.
- If the problem node is not in your host, you may need to call the operator of the other domain or host to activate the nodes.
- If the test had been unsolicited and the originating node is from another host, this may indicate a request that you activate the nodes so that this other host may attempt some session traffic activities on that route.

Programmer Response: The information in this group of messages is basically that which appears in the NS_ER_TESTED request unit. See the description of the explicit route test process and its associated RUs in the *z/OS Communications Server: SNA Diagnosis Vol 1, Techniques and Procedures*. For more information on the DISPLAY ROUTE command, see the *z/OS Communications Server: SNA Operation*. Most problems will be the result of inconsistent route definitions among the affected network nodes.

IST534I *originsa* **[***tg1***] [***adjsa***]** *destsa erlength*

Explanation: This message is part of a group of messages. The first message is IST533I. See the explanation of that message for a full description.

IST535I **ROUTE DISPLAY** *requestid* **FROM SA** *subarea1* **TO SA** *subarea2*

Explanation: This message is the first in a group of messages that VTAM issues in response to a DISPLAY ROUTE command. A full description of the message group follows.

```
IST535I  ROUTE DISPLAY requestid FROM SA subarea1 TO SA subarea2
IST808I  ORIGIN PU = originpu DEST PU = destpu NETID = netid
IST536I  VR  TP    STATUS   ER     ADJSUB   TGN    STATUS     CUR   MIN   MAX
IST537I [vr][tp]  [vrstatus] [er]   [adjsa] [tgn]  [erstatus] [cur] [min] [max]
:
IST314I  END
```

These messages contain virtual route and explicit route status for routes to the destination subarea *subarea2*. If the explicit route test option (TEST=YES) was requested, the results of actual tests of the applicable explicit routes will appear in subsequent messages.

IST535I

The route display number *requestid* in message IST535I is a request identification number, which also appears in any subsequent messages (resulting from the TEST=YES option) that are derived from the same DISPLAY ROUTE command. *subarea1* is the subarea address of the node from which the route status is being reported; *subarea2* is the subarea address of the destination node.

IST808I

Message IST808I indicates the node names of the origin PU (*originpu*) and destination PU (*destpu*), and the network ID (*netid*).

If the destination subarea (DESTSA) has not been defined in the PATH definition statement, *destpu* will appear as *****NA***** (not available).

IST536I

Message IST536I is a header line identifying columns of data in subsequent occurrences of message IST537I.

IST537I

For the virtual route identified by:
vr virtual route number and
tp transmission priority,

message IST537I identifies:

vrstatus
The current status of that virtual route transmission priority pair

er The number of the explicit route onto which that virtual route is mapped

adjsa The subarea number of the adjacent node through which the explicit route leaves the origin node

tgn The transmission group number

erstatus
The status of the explicit route.

The following fields will also be included if the VR STATUS *vrstatus* is ACTIV.

cur
The current window size of the virtual route

min
The current minimum window size of the virtual route

max
The current maximum window size of the virtual route.

Note: The default minimum and maximum window sizes that are coded in the PATH definition deck are not included in this display.

If the ORIGIN operand was specified on the DISPLAY ROUTE command with a name other than ISTPUS or the name specified on the HOSTPU start option in this host, the *cur*, *min*, and *max* window sizes reflecting the origin subarea VR information are not available and will not be displayed.

If the COSNAME operand was specified in the DISPLAY ROUTE command, message IST537I will appear in the same order as in the COS table entry. If a virtual route display or an explicit route display was requested, these messages will appear in numeric order by virtual route number (*vr*).

If an explicit route display was requested in the DISPLAY ROUTE command and there are no virtual routes defined to use a given explicit route, all the virtual route information (*vr*, *tp*, and *vrstatus*) for that explicit route will be blank. If a virtual route display or a COS display was requested in the DISPLAY ROUTE command and a given virtual route has not been defined to VTAM, all the explicit route information (*er*, *adjsa*, and *erstatus*) for that virtual route will be blank. *adjsa* will be blank for any explicit route with a status of **UNDEF**.

The *vrstatus* field in message IST537I may contain any of the following values:

ACTIV
The VR is active.

The virtual route has been defined to VTAM in a path definition set. It has been successfully activated. It is in use by one or more sessions.

BLCKD
The VR is blocked.

The virtual route has been defined to VTAM in a path definition set and it has been successfully activated. It is in use by one or more sessions, but congestion has been detected along the route.

PACT
The VR is pending active.

The virtual route has been defined to VTAM in a path definition set and is in the process of being activated by this node.

PINAC
The VR is pending inactive.

The virtual route has been defined to VTAM in a path definition set and has recently been active, but is now in the process of being deactivated by this node. Unless VTAM is halting, the VR will be automatically reactivated when it is again needed for a session.

INACT
The VR is inactive.

The virtual route has been defined to VTAM in a path definition set, but is not currently active or is pending active. It will be automatically activated when it is needed for a session.

UNDEF
The VR is undefined.

The virtual route has not been defined to VTAM in a path definition set.

The *erstatus* field in message IST537I may contain any of the following values:

ACTIV1
The ER is active.

The explicit route has been defined to VTAM in a path definition set, is physically available to the network, and has been activated by the node at the other end of the route. A route test (TEST=YES option) should succeed, because physical connectivity exists along the entire route in this state.

ACTIV2
The ER is active.

The explicit route has been defined to VTAM in a path definition deck, is physically available to the network, has been activated by the node at the other end of the route, and is in the process of being activated by this node. A route test (TEST=YES option) should succeed, because physical connectivity exists along the entire route in this state.

ACTIV3
The ER is active.

The explicit route has been defined to VTAM in a path definition set, is physically available to the network, and has been activated by this node or by both this node and the node at the other end of the route. A route test (TEST=YES option) should succeed, because physical connectivity exists along the entire route in this state.

MIGR
The ER is active (but only for limited function, migration use).

The explicit route has been defined to VTAM in a path definition set and is believed to be physically available to the network. During activation processing, it was determined that one or more nodes along the route do not support the explicit route protocols. A route test (TEST=YES option) will likely fail, because one or more of its nodes does not support explicit route protocols. This does not mean that the physical connectivity of the route has failed. It only means that the route could not be completely tested because of the migration nodes.

PACT
The ER is pending active.

The explicit route has been defined to VTAM in a path definition set, is physically available to the network, has not been activated by the node at the other end of the route, and is in the process of being activated by this node. A route test (TEST=YES option) should succeed, because physical connectivity exists along the entire route in this state.

INACT
The ER is inactive.

The explicit route has been defined to VTAM in a path definition set and is physically available to the network, but has never been successfully activated. Activation will be attempted automatically when the ER is needed for a session. A route test (TEST=YES option) should succeed, because physical connectivity exists along the entire route in this state.

INOP
The ER is inoperative.

The explicit route has been defined to VTAM in a path definition set, but is not physically available to the network. That is, connectivity does not exist along the entire route. A route test (TEST=YES option) will fail, because the explicit route does not have physical connectivity.

PDEFA
The ER is pending definition—active.

The explicit route is physically available to the network, and activation has been attempted by the node at the other end of the route, but the route has not yet been defined to VTAM in a path definition set. The route is automatically activated by this node when an appropriate path definition set is processed. A route test (TEST=YES option) can succeed, even though the explicit route is not defined in this host. The purpose of the test is to provide information on the physical connectivity of the explicit route so that the operator can decide whether or not to define the route. In order for VTAM to carry session message traffic, the explicit route must be defined to VTAM.

PDEFO
The ER is pending definition—operative.

The explicit route is physically available to the network, but it has not yet been defined to VTAM in a path definition set. A route test (TEST=YES option) can succeed, even though the explicit route is not defined in this host. The purpose of the test is to provide information on the physical connectivity of the explicit route so that the operator can decide whether or not to define the route. In order to be used by VTAM to carry session message traffic, the explicit route must be defined to VTAM.

UNDEF
The ER is undefined.

The explicit route has not been defined to VTAM in a path definition set and is not physically available to the network. A route test (TEST=YES option) will always fail, because the explicit route is neither defined to VTAM nor operative.

System Action: Processing continues. If the DISPLAY ROUTE command specified TEST=YES, subsequent messages (with route display number *rtn* being the same as the one appearing in message IST535I) will indicate whether VTAM started any route tests and, if so, their results (as the results are received from the network).

Operator Response: The status may be used for information only, or may indicate that operator action is necessary if any status does not meet expectations. In particular, a virtual route or an explicit route with a status of UNDEF might indicate that a path definition set should be activated. An explicit route with a status of INOP might indicate that a subarea node, a cross-subarea link, or a cross-subarea link station should be activated, or that there is some network problem with a node, link, or link station.

Programmer Response: None.

IST536I VR TP STATUS ER ADJSUB TGN STATUS CUR MIN MAX

Explanation: This message is part of a group of messages. The first message of the message group is IST535I. See the explanation of that message for a full description.

IST537I [*vr*][*tp*] [*vrstatus*] [*er*] [*adjsa*] [*erstatus*] [*cur*] [*min*] [*max*]

Explanation: This message appears as part of a group of messages. The first message of the message group is IST535I. See the explanation of that message for a full description.

IST538I ROUTE TEST *routetest* IN PROGRESS

Explanation: This message follows the group of messages starting with message IST535I if the DISPLAY ROUTE command indicated TEST=YES and no error occurred preventing the ER test. The display identification number *routetest* is passed in the ROUTE TEST RU and will be used to associate asynchronously received ER test results with the original DISPLAY ROUTE command.

System Action: Processing continues. The ROUTE TEST RU indicated that ER testing is to be performed. Processing of the ER test is occurring asynchronously. VTAM will display the results of this testing in the messages that follow this one as the tests are completed.

Operator Response: None.

Programmer Response: None.

IST539I DISPLAY ROUTE COMMAND FAILED, COS CANNOT BE RESOLVED

Explanation: VTAM issues this message if COSNAME was specified on a DISPLAY ROUTE command and VTAM could not find the virtual route list associated with the specified COSNAME.

System Action: VTAM completes execution of the DISPLAY command.

Operator Response: Ensure that you entered the COSNAME correctly. If problems persist, save the system log for problem determination.

Programmer Response: If necessary, update the COS table to reflect the desired COSNAME.

IST540I DISPLAY ROUTE COMMAND FAILED, SENSE = *code*

Explanation: VTAM issues this message if it encountered an error during the processing of the DISPLAY ROUTE command.

code is the sense code and indicates the reason for the error. See the *z/OS Communications Server: IP and SNA Codes* for a description of *code*.

System Action: Processing continues.

Operator Response: Save the system log for problem determination.

Programmer Response: Use the system log and meaning of *code* to assist you in determining the cause of the failure.

IST541I FOLLOWING PATH DEFINITION IS IGNORED

Explanation: This message is the first in a group of messages. A complete description of the message group follows.

```
IST541I  FOLLOWING PATH DEFINITION IS IGNORED
IST544I  PATH list
IST523I  REASON = reason
```

VTAM ignores the path definition indicated in IST544I.

list can be either of the following:

VRn = *ern*, **DESTSA =** *destsubarea*

ERn = *adj*, *tgn* **DESTSA =** *destsubarea*

adj is the adjacent subarea number.

destsubarea is the destination subarea number.

ern is the explicit route number.

tgn is the transmission group number.

reason can be one of the following:

INSUFFICIENT STORAGE
There is insufficient storage to build a table entry recording the existence of the route.

ER ALREADY DEFINED
The explicit route indicated is already defined in the same way as it is now defined in the current path definition statement.

VR ALREADY DEFINED
The virtual route indicated is already defined in the same way as it is now defined in the current path definition statement.

ER MAY NOT BE REDEFINED
The path definition attempts to redefine an explicit route that is not in a redefinable state (the route is active).

VR MAY NOT BE REDEFINED
The path definition attempts to redefine a virtual route that is not in a redefinable state (the route is active).

System Action: If the route described is not already defined, it will not be usable.

Operator Response: Save the system log for problem determination.

Programmer Response: If insufficient storage is a recurring problem, you might need to increase the size of the appropriate buffer pool as determined by the output from the DISPLAY BFRUSE command.

Have the operator cancel nonessential jobs or deactivate an unused part of the network to prevent further losses. VTAM may have to be halted and restarted with increased storage.

If the route is already defined and you meant to change that definition, check the path specification for errors.

IST542I INVALID DESTSA *destsubarea* **FOR PATH DEFINITION — IGNORED**

Explanation: VTAM issues this message when destination subarea value *destsubarea* is not valid because it is greater than the maximum subarea number supported by a network to which this VTAM host is interconnected. The maximum subarea number is the value specified on the MXSUBNUM start option.

System Action: The destination subarea value *destsubarea* is ignored. The entire path definition will be ignored if *destsubarea* is the only destination subarea value coded.

Operator Response: Save the system log for problem determination.

Programmer Response: If a path to destination subarea *destsubarea* is desired, change the maximum subarea number by modifying the MXSUBNUM start option. You must restart VTAM to use the new value of MXSUBNUM. See the *z/OS Communications Server: SNA Resource Definition Reference* for a description of this start option.

See the *z/OS Communications Server: SNA Resource Definition Reference* for information about VTAM start options and their equivalent ISTRACON fields.

IST543I PATH *list* **IS REDEFINED AS FOLLOWS**

Explanation: This message is the first in a group of messages. A complete description of the message group follows.

```
IST543I  PATH list IS REDEFINED AS FOLLOWS
IST544I  PATH list
```

A route is being redefined as a result of a VARY ACT command for a path definition. Explicit routes are redefined to go through either a different adjacent subarea or transmission group, or both. Virtual routes are redefined to map onto a different explicit route.

list can be either of the following:

VRn = *ern*, **DESTSA =** *destsubarea*

ERn = *adj*, *tgn* **DESTSA =** *destsubarea*

adj is the adjacent subarea number.

destsubarea is the destination subarea number.

ern is the explicit route number.

tgn is the transmission group number.

System Action: The route indicated has been redefined.

Operator Response: None. If you wish to restore the old path, you can activate a path table in which the old path is defined.

Programmer Response: None.

IST544I PATH *list*

Explanation: This message is part of a group of messages. The first message is either IST541I or IST543I. See the explanation of the first message in the group for a complete description.

IST546I UNABLE TO PROCESS ER OP REPORT TO DESTINATION SA *destsubarea*

Explanation: This message is the first in a group of messages. A full description of the message group follows.

```
IST546I  UNABLE TO PROCESS ER OP REPORT TO DESTINATION SA = destsubarea
IST547I  EXPLICIT ROUTE MASK ermask
IST523I  REASON = reason
```

A request unit attempted to report explicit routes as operative to destination subarea *destsubarea*. Processing failed because of the reason designated by message IST523I.

reason can be any of the following:

INSUFFICIENT STORAGE
There was insufficient storage for VTAM to process the request.

INVALID ADJACENT SUBAREA destsubarea
Subarea *destsubarea* is greater than the maximum number allowed or is equal to the host subarea.

INVALID DESTINATION SUBAREA destsubarea
Subarea *destsubarea* is greater than the maximum number allowed or is equal to the host subarea.

Message IST547I designates the explicit routes with a *ermask* of 4 hexadecimal digits (16 bits). The first bit of the mask indicates ER0, the second bit indicates ER1, and so on.

System Action: Processing continues. Because VTAM cannot process the request to make the reported routes operative, subsequent failures of certain VTAM operations may occur.

Operator Response: Save the system log for problem determination. If the reason is insufficient storage, enter the DISPLAY BFRUSE and DISPLAY STORUSE commands.

Programmer Response: Verify that the operator entered the buffer pool or CSA start options as specified in the start procedures.

Increase storage as required. For insufficient storage errors, you might want to redefine your buffer pool or CSA limits. If the start option cannot be modified using the MODIFY VTAMOPTS command, you must modify the VTAM start options file (ATCSTRxx) and restart VTAM to use the start option.

- See the *z/OS Communications Server: SNA Migration* to determine the storage requirements for VTAM.
- See the *z/OS Communications Server: SNA Resource Definition Reference* for a description of VTAM start options.
- See the *z/OS Communications Server: SNA Operation* for information about the DISPLAY BFRUSE Command, theDISPLAY STORUSE Command, and the MODIFY VTAMOPTS Command.
- See the *z/OS Communications Server: SNA Network Implementation Guide* for an explanation and description of buffer pools and for general information on buffer pool specification and allocation.
- See the *z/OS Communications Server: SNA Diagnosis Vol 2, FFST Dumps and the VIT* for information about analyzing dumps and about analyzing storage using the VIT analysis tool, if external trace is active.

IST547I EXPLICIT ROUTE MASK *ermask*

Explanation: This message is part of a group of messages. The first message is IST546I. See the explanation of that message for a full description.

IST548I *command* **FAILED** *linkstation subarea1,nodename1 subarea2,nodename2*

Explanation: The *command* for *linkstation* failed because of a mismatch between information received in the CONTACTED (LOADED) RU and the information the SSCP already had about the contacted adjacent node. The adjacent node in the SSCP table (the subarea or name from the CONTACTED RU) is not a PU type 4, or the subarea or name in the RU does not match the subarea defined to VTAM.

subarea1 and *nodename1* are taken from the RU. *subarea2* and *nodename2* are taken from the definitions defined to VTAM. In either case, if the name of the adjacent node is not available then *****NA***** will be displayed. This can occur if the RU does not have a name field or if VTAM knows the adjacent node only by subarea and not by name.

System Action: The link station is deactivated.

Operator Response: If the name value is supplied and valid, use the DISPLAY ID command to display the nodes. Also enter a DISPLAY STATIONS command. Save the system log for problem determination.

Programmer Response: There are two distinct nodes in the network with the same name or subarea. Identify the one in error and correct it.

IST549I LL2 TEST FOR ID = *name* **ENDED** *result*

Explanation: This message is the first in a group of messages that VTAM issues in response to a MODIFY command. A full description of the message group follows.

```
IST549I  LL2 TEST FOR ID = name ENDED result
IST243I  FRAMES SENT = sent, RCVD = received, RCVD WITHOUT ERRORS = noerrors
```

IST561I

The MODIFY LL2 command requests a link level 2 test to *name* be initiated.

result can be one of the following:

DUE TO A LINK INOP
The test was terminated prematurely because of a failure in the link to which *name* is attached.

DUE TO A TEST INIT ERROR
The test initialization procedure failed because the ERP limit expired while the link station was waiting for a response to the initial test command. In this case, *sent*, *received*, and *noerrors* will be all zeroes. This may occur over a link connecting two NCPs if both NCPs attempt to initiate link level 2 tests simultaneously for that link.

SUCCESSFULLY
Valid responses were received for the requested number of TEST commands.

WITH ERRORS
The test results contain errors. See the following explanation for *noerrors*.

Message IST243I contains counts of the number of SDLC TEST commands and responses that are sent and received.

sent is the number of test commands sent.

received is the number of command responses received.

noerrors is the number of command responses received that contained the user-supplied data intact (unchanged). If no data errors occurred, this number will equal *received*. If this number is less than *received*, a data error occurred.

System Action: Processing continues.

Operator Response: None.

Programmer Response: None.

IST561I STORAGE UNAVAILABLE: *bp* **BUFFER POOL**

Explanation: A VTAM request for storage from the buffer pool *bp* could not be satisfied because there was not enough available storage in the buffer pool.

bp is the name of the buffer pool. See the *z/OS Communications Server: SNA Network Implementation Guide* for an explanation and description of buffer pools and for general information on buffer pool specification and allocation.

System Action: The action depends on why the requested storage was needed. Other messages may follow identifying the effect this storage condition has on VTAM.

Operator Response: Wait a short time and reenter the command. If VTAM continues to issue this message, enter the DISPLAY BFRUSE command. Save the system log and request a dump for problem determination.

Programmer Response: Verify that the operator entered the buffer pool or CSA start options as specified in the start procedures.

Increase storage as required. For insufficient storage errors, you might want to redefine your buffer pool or CSA start options. If the start option cannot be modified using the MODIFY VTAMOPTS command, you must modify the VTAM start options file (ATCSTRxx) and restart VTAM to use the start option.

- See *z/OS Communications Server: SNA Operation* for more information on the DISPLAY BFRUSE and MODIFY VTAMOPTS commands.
- See the *z/OS Communications Server: SNA Network Implementation Guide* for an explanation and description of buffer pools and for general information on buffer pool specification and allocation.
- See the *z/OS Communications Server: SNA Diagnosis Vol 1, Techniques and Procedures* for additional information.

IST562I STORAGE UNAVAILABLE: *type* **REACHED**

Explanation: A VTAM request for storage from the common service area (CSA) could not be satisfied. Doing so would exceed the CSALIMIT or CSA24 limit values.

type is one of the following:

- **CSALIMIT** if the storage allocation request did not explicitly specify the 24-bit addressable storage.
- **CSA24 LIMIT** if the storage allocation request explicitly specified 24-bit addressable storage.

System Action: The action depends on why the requested storage was needed. Other messages might follow identifying the effect this storage condition has on VTAM.

Operator Response: Enter the DISPLAY BFRUSE command. Save the system log and request a dump for problem determination.

Note: If you recieve a large number of *CSALIMIT* **is reached** messages, use the MODIFY VTAMOPTS or MODIFY CSALIMIT command to increase **CSALIMIT** as soon as possible. The command might not work if the processing continues until the VTAM LPBUF is exhausted.

Programmer Response: Verify that the operator entered the CSA start options as specified in the start procedures.

Increase storage as required. For insufficient storage errors, you might want to redefine your CSA limits by using the MODIFY VTAMOPTS command.

- See *z/OS Communications Server: SNA Operation* for more information on the DISPLAY BFRUSE and MODIFY VTAMOPTS commands.
- See the *z/OS Communications Server: SNA Diagnosis Vol 1, Techniques and Procedures* for additional information.

IST563I STORAGE UNAVAILABLE: MAXPVT REACHED FOR *jobname stepname*

Explanation: A VTAM request for storage from the private area associated with the task identified by *jobname* and *stepname* could not be satisfied. Doing so would cause that task's VTAM MAXPVT value to be exceeded.

System Action: Action depends on why the requested storage was needed. Other messages may follow identifying the effect this storage condition has on VTAM.

Operator Response: Wait a short time and reenter the command. If VTAM continues to issue this message, enter the DISPLAY STORUSE command to display storage usage for storage pools. Message IST981I displays total VTAM private storage information. If this message does not appear in the display, you may need to reissue the DISPLAY STORUSE command, specifying a higher value for the NUM operand. See the *z/OS Communications Server: SNA Operation* for additional information.

Save the system log and request a dump for problem determination.

Programmer Response: Check the specification of the MAXPVT operand on the APPL definition statements for the VTAM application programs running under the indicated task and make adjustments if necessary.

- See the *z/OS Communications Server: SNA Resource Definition Reference* for more information on the MAXPVT operand.
- See the *z/OS Communications Server: SNA Diagnosis Vol 1, Techniques and Procedures* for additional information.

IST564I STORAGE UNAVAILABLE: COMMON AREA SUBPOOL *subpool*

Explanation: VTAM issues this message when a VTAM request for storage from the common service area (CSA) could not be satisfied.

subpool identifies the storage subpool from which VTAM attempted to obtain storage (in decimal with leading zeros).

System Action: The action depends on why the requested storage was needed. Other messages may follow identifying the effect this storage condition has on VTAM.

Operator Response: Wait a short time and reenter the command. If VTAM continues to issue this message, enter the DISPLAY BFRUSE command. Enter the DISPLAY STORUSE command to display storage usage for storage pools. Save the system log and request a dump for problem determination.

Programmer Response: Verify that the operator entered the CSA start options as specified in the start procedures.

Increase storage as required. For insufficient storage errors, you might want to redefine your CSA start options by using the MODIFY VTAMOPTS command.

- See the *z/OS Communications Server: SNA Migration* to determine the storage requirements for VTAM.
- See the *z/OS Communications Server: SNA Resource Definition Reference* for a description of VTAM start options.
- See the *z/OS Communications Server: SNA Operation* for information about the DISPLAY BFRUSE Command, theDISPLAY STORUSE Command, and the MODIFY VTAMOPTS Command.
- See the *z/OS Communications Server: SNA Network Implementation Guide* for an explanation and description of buffer pools and for general information on buffer pool specification and allocation.
- See the *z/OS Communications Server: SNA Diagnosis Vol 2, FFST Dumps and the VIT* for information about analyzing dumps and about analyzing storage using the VIT analysis tool, if external trace is active.

IST565I STORAGE UNAVAILABLE: VTAM PRIVATE AREA SUBPOOL *subpool*

Explanation: A VTAM request for private storage could not be satisfied.

subpool identifies the storage subpool from which VTAM attempted to allocate storage (in decimal with leading zeros)

Note: This may not represent a permanent lack of storage but a temporary problem whereby VTAM had difficulty obtaining storage quickly enough to satisfy the request at this time.

System Action: Action depends on why the requested storage was needed. Other messages may follow identifying the effect this storage condition has on VTAM.

Operator Response: Wait a short time and reenter the command. If VTAM continues to issue this message, enter the DISPLAY STORUSE command to display storage usage for storage pools. Message IST981I displays total VTAM private storage information. If this message does not appear in the display, you may need to reissue the DISPLAY STORUSE command, specifying a higher value for the NUM operand.

Save the system log and request a dump for problem determination.

Issue a DISPLAY SRCHINFO,FROMCP=*,FROMSSCP=* command and determine whether there is a particular control point (CP) in the network that is not responding to search requests. VTAM continues to maintain certain information about those search requests, which could cause VTAM private storage to grow. Provide the output of the DISPLAY command to the systems programmer.

Programmer Response: Verify that the operator entered the buffer pool or CSA start options as specified in the start procedures.

Increase storage as required. For insufficient storage errors, you might want to redefine your buffer pool or CSA limits. If the start option cannot be modified using the MODIFY VTAMOPTS command, you must modify the VTAM start options file (ATCSTRxx) and restart VTAM to use the start option.

- See the *z/OS Communications Server: SNA Migration* to determine the storage requirements for VTAM.
- See the *z/OS Communications Server: SNA Resource Definition Reference* for a description of VTAM start options.
- See the *z/OS Communications Server: SNA Operation* for information about the DISPLAY BFRUSE Command, theDISPLAY STORUSE Command, and the MODIFY VTAMOPTS Command.
- See the *z/OS Communications Server: SNA Network Implementation Guide* for an explanation and description of buffer pools and for general information on buffer pool specification and allocation.
- See the *z/OS Communications Server: SNA Diagnosis Vol 2, FFST Dumps and the VIT* for information about analyzing dumps and about analyzing storage using the VIT analysis tool, if external trace is active.

Using the output of the DISPLAY SRCHINFO command, determine whether CP-CP sessions should be terminated between this host and the unresponsive host identified in the DISPLAY output. Terminating the CP-CP sessions will free up storage allocated to search requests toward the unresponsive control point.

IST566I STORAGE UNAVAILABLE: *jobname stepname* **SUBPOOL** *subpool*

Explanation: A VTAM request for storage from the private area associated with the task identified by *jobname* and *stepname* could not be satisfied.

subpool identifies the storage subpool from which VTAM attempted to allocate storage (in decimal with leading zeros)

System Action: The action depends on why the requested storage was needed. Other messages may follow identifying the effect this storage condition has on VTAM.

Operator Response: Wait a short time and reenter the command. If VTAM continues to issue this message, enter the DISPLAY STORUSE command to display storage usage for storage pools. Message IST981I displays total VTAM private storage information. If this message does not appear in the display, you may need to reissue the DISPLAY STORUSE command, specifying a higher value for the NUM operand. See the *z/OS Communications Server: SNA Operation* for additional information.

Save the system log and request a dump for problem determination.

Programmer Response: Increase storage as required.

- See *z/OS Communications Server: SNA Operation* for more information on the DISPLAY STORUSE command.
- See the *z/OS Communications Server: SNA Diagnosis Vol 1, Techniques and Procedures* for additional information.

IST567I *command* **OF** *loadmodname* **FOR** *ncpname status*

Explanation: This message is the first in a group of messages that VTAM issues in one of the following situations:

- In response to a VARY ACT,LOAD=YES or LOAD=U command for an NCP when the disk operations associated with the VARY ACT were not performed.
- In response to a VARY ACT command for an NCP that specified LOADFROM, SAVEMOD, or DUMPLOAD for NCP *ncpname*.
- In response to a MODIFY LOAD command for an NCP when the MODIFY LOAD request was not executable.

A full description of the message group follows.

```
IST567I  command OF loadmodname FOR ncpname status
IST523I  REASON = reason
```

See Chapter 14, “Command and RU types in VTAM messages” on page 685 for a description of *command*.

loadmodname is the name of the load module being affected. If unknown, *loadmodname* is *****NA*****.

ncpname is the name of the NCP.

status is one of the following:

- **CANCELED**
- **COMPLETE**
- **FAILED**
- **NOT PERFORMED**

reason is one of the following:

ALREADY LOADED
The VARY ACT command continues; the communication controller was already loaded.

CANCEL IN PROGRESS
A MODIFY LOAD (any ACTION type) command was entered and VTAM was currently processing a CANCEL request for the same NCP. The CANCEL must complete before a subsequent MODIFY LOAD can be entered.

CANCELED BY OPERATOR
A request to cancel a load that was in progress with a MODIFY LOAD,ACTION=CANCEL command has completed.

CONTROLLER DISK OPTION UNAVAILABLE
The VARY ACT command failed because the controller does not support disk functions.

DISK/HARDWARE ERROR
The VARY ACT command failed because of a disk or hardware error.

DISK FUNCTIONS NOT PERFORMED
INITEST=YES was specified on the PCCU definition statement for a non-3705 communication control unit. Although the load was performed, the VARY ACT command failed.

IST567I

DISK RESOURCE TEMPORARILY UNAVAILABLE
The hardware resource is temporarily unavailable.

DUPLICATE LOAD MODULE ON DISK
A MODIFY LOAD,ACTION=ADD command was entered and there was already a load module on the disk with the same name.

ESTIMATED IPL WITHIN 5 MINS OF ANOTHER LOADMOD
The MODIFY LOAD command failed because another load module on the MOSS disk has an IPL scheduled for the same time as the IPL you requested.

FUNCTION NOT SUPPORTED
A MODIFY LOAD command was entered and it is not supported by the NCP.

INITIAL TEST INVALID FOR CCU
INITEST=YES was specified on the PCCU definition statement for a non-3705 communication control unit.

IPLTIME MORE THAN 90 DAYS FROM CURRENT DATE
A MODIFY LOAD command failed because the specified IPLTIME is more than 90 days from the current date.

keyword time **EARLIER THAN SYSTEM TIME**
A MODIFY LOAD command failed.

keyword is either **IPLTIME** or **NOTIFY** and indicates why the command failed.

IPLTIME
VTAM cannot schedule an IPL because the requested IPL time is earlier than the current system time.

NOTIFY
VTAM cannot schedule an IPL because the time at which notification was requested is earlier than the current system time. For example, if you attempt to schedule an IPL 30 minutes from now and ask to be notified 60 minutes before the IPL occurs, the MODIFY LOAD command fails, and VTAM issues this message.

If the values for both IPLTIME and NOTIFY are not valid, VTAM issues this message only once. The value of *keyword* is **IPLTIME**.

time is in the format *date,hh:mm* and is the date and time for which an IPL or a notification was requested. *date* is issued in the format specified in the VTAM start parameters; the default is *mm/dd/yy*. *hh:mm* is in the 24-hour system. For example, 1:00 p.m. is displayed as 13:00.

LOAD IN PROGRESS
A MODIFY LOAD,ACTION=ADD|REPLACE|PURGE command was entered and VTAM was in the process of another load for the same NCP. Only one load may be processed at a time.

LOAD NOT IN PROGRESS
A MODIFY LOAD,ACTION=CANCEL command was entered to cancel a load in progress and there was no load in progress.

NO IPL SCHEDULED FOR LOAD MODULE *load_module*
A MODIFY LOAD command failed. A scheduled IPL is not currently set for this module.

NO ROOM ON DISK
One of the following happened:

- A MODIFY LOAD,ACTION=ADD command was entered, and the disk was already full.
- A MODIFY LOAD,ACTION=REPLACE command was entered, and load module *loadmodname* was not on the disk. There is not enough room on the disk to add the additional load module.

REQUESTED FILE NOT FOUND
The command failed because one of the following occurred:

- The operator entered a VARY ACT command specifying the LOADFROM=HOST operand. VTAM could not find NCP load module *loadmodname* on the host.
- The operator entered a VARY ACT command specifying the LOADFROM=EXTERNAL operand. VTAM could not find NCP load module *loadmodname* on the hard disk of the communication controller.
- The operator entered a MODIFY LOAD command specifying the ACT=PURGE operand. VTAM could not find load module *loadmodname* on the hard disk of the communication controller.

RU LENGTH ERROR
The MODIFY LOAD operation was halted because the NCP rejected the IPLINIT RU. This indicates that the NCP is not the correct level to process MODIFY LOAD commands.

SSP NOT CORRECT LEVEL
The controller (CCU), NCP, or SSP does not support the function requested. An NCP release prior to NCP V5R2 cannot be loaded with the LOADFROM, SAVEMOD, or DUMPLOAD operands. These operands are valid only for NCP V5R2 or a later release. The command failed.

System Action: See the preceding explanation of *reason* for the system action. Other processing continues.

Operator Response: If *reason* is:

CANCELED BY OPERATOR
No action is required. This an informational message only.

DISK RESOURCE TEMPORARILY UNAVAILABLE
Retry the request.

DUPLICATE LOAD MODULE ON DISK
Retry the command, using the ACTION=REPLACE option of the MODIFY LOAD command instead of the ACTION=ADD option.

ESTIMATED IPL WITHIN 5 MINS OF ANOTHER LOADMOD
Enter a DISPLAY DISK command to determine the IPL times scheduled for all the load modules on the MOSS disk. Change the value of *ipltime* accordingly and reenter the command.

IPLTIME MORE THAN 90 DAYS FROM CURRENT DATE
Reenter the command with a date fewer than 90 days from the current date.

keyword time **EARLIER THAN SYSTEM TIME**
Correct the *time* parameter and reenter the command. See the *z/OS Communications Server: SNA Operation* for more information.

LOAD IN PROGRESS
Wait until the current load operation completes, then retry the command.

LOAD NOT IN PROGRESS
No action. There was no operation in progress to cancel.

NO IPL SCHEDULED FOR LOAD MODULE *load_module*
No action is required. This is an informational message only.

NO ROOM ON DISK
Enter a MODIFY LOAD,ACTION=PURGE command to delete an unneeded load module from the disk. Enter a DISPLAY DISK command to examine the contents of the disk.

REQUESTED FILE NOT FOUND
Follow the procedures set up by the system programmer.

RU LENGTH ERROR
Save the system log for problem determination.

SSP NOT CORRECT LEVEL
Save the system log for problem determination.

Otherwise, follow defined procedures for hardware problems.

Programmer Response:

- If *reason* is **RU LENGTH ERROR**, ensure that the NCP is at the correct level.
- If *reason* is **SSP NOT CORRECT LEVEL**, ensure that the NCP, SSP, and CCU are at the correct level. To use the LOADFROM, SAVEMOD, and DUMPLOAD operands on the VARY ACT command, the NCP must be NCP V5R2 or a later release, and the SSP must be SSP V3R4 or a later release.
- For all other *reason*s, there is no additional suggested action.

IST571I LOAD FAILED FOR ID = *puname* **REQ:** *ru*, **SENSE:** *code*

Explanation: After loading a PU type 2, VTAM receives an NS_LOADSTAT request unit that indicates whether or not the load was completed successfully. VTAM issues this message when it receives an NS_LOADSTAT that indicates that the load was not completed successfully.

puname is the name of the physical unit that requested the load.

- When *ru* is **IPL INIT**, **IPL TEXT**, or **IPL FINAL**, the requested load failed during the load procedure.
- When the failing network services request unit *ru* is **INITLOAD**, the load failed because the application program could not process the load request.

code is the sense code and provides additional information about the reason for the failure. See the *z/OS Communications Server: IP and SNA Codes* for a description of *code*.

Note: When *ru* is *****NA*****, *code* is 08000000 (request rejected) and the failing request is not available. (The request and sense information were not included in the NS_LOADSTAT RU.)

System Action: The system action depends upon the time at which the load was requested. If the load was requested during activation of the physical unit, VTAM deactivates the PU. Another message will signal completion of the deactivation processing. If the load was requested after the PU was activated, VTAM will take no action.

Operator Response: Retry activating the physical unit if load failure caused the physical unit to be deactivated. Otherwise, no response is required. If the problem persists, check the PU hardware for possible problems.

Programmer Response: None.

IST572I REJECTING TG ADJACENT ER MASK

Explanation: This message is part of a group of messages. The first message is IST533I. See the explanation of that message for a full description.

IST574E START I/O TIMEOUT OCCURRED FOR *linkname*

Explanation: This host has initiated an I/O operation. An interrupt has not been received within the time specified for that I/O operation. *linkname* is the name of a communication link.

System Action: Processing continues.

Note: If the other host does not respond within roughly 3 minutes from the time that this message appears, request units (RUs) will be lost. If MIH=YES was specified on the LINE or GROUP definition statement, RUs will be lost **and** the PU will become inoperative at the end of 3 minutes. The interrupt interval can be modified using the MIHTMOUT start option. Evaluate the setting of the REPLYTO operand. See the *z/OS Communications Server: SNA Resource Definition Reference* for more information.

Operator Response:

- If the other host has failed, the operator may want to deactivate the link *linkname* since it cannot be used.
- If the other host has temporarily stopped, normal operation will resume when the operator starts the system again.

Otherwise, no action is required.

Programmer Response: None.

IST576I TSO TRACE = {ON|OFF}

Explanation: VTAM issues this message in response to a DISPLAY TSOUSER command. It states whether the TSO trace is on or off for a particular TSO user.

System Action: Processing continues.

Operator Response: None.

Programmer Response: None.

IST577I **TIME =** *time* **DATE =** *date* **ID =** *id*

Explanation: This message is the first in a group of messages that displays tuning statistics pertaining to VTAM's operation of a channel-to-channel adapter. A full description of the message group follows.

```
IST577I    TIME = time        DATE = date          ID = id
IST578I   CHNRM = chnrm      CHMAX = chmax      RDBUF = rdbuf
IST579I    ATTN = attn      TIMERS = timers     QDPTH = qdpth
IST580I  BUFCAP = bufcap       PRI = pri        SLODN = slodn
IST581I    IPIU = ipiu        OPIU = opiu      DLRMAX = dlrmax
IST1022I  WRBUF = wrbuf
IST314I  END
```

IST577I

time indicates the time (in hours, minutes, seconds, and hundredths of seconds) at which the record is recorded. For example, 07431380 means that the record was recorded at the 7th hour, 43rd minute, 13th second, and 80 one-hundredths of a second of the day.

date is the date on which the tuning statistics report is recorded. The date is in the form *yyddd*, where *yy* is the last two digits of the numeric year and *ddd* is the numeric day of the year. For example, 87190 means the record is recorded on the 190th day of 1987.

id provides the name of the link through which the tuning statistics are taken. It corresponds to the name of the LINE definition statement in the associated channel-attachment major node.

IST578I

chnrm is the number of channel programs issued that VTAM used to send data to the node on the other side of the adapter.

– *chnrm* will be greater than or equal to the number of write triggers (TIMERS + QDPTH + PRI + BUFCAP).
– The difference between *chnrm* and the sum of the write triggers represents the following:

  The number of channel programs with write data that are initiated by an attention from the other host when data was queued, but a channel program with write data could not be triggered.
– As you increase the value of the DELAY operand for the channel-to-channel adapter, the difference between *chnrm* and the sum of the write triggers may be greater.

chmax is 0 because all channel programs are the same size.

rdbuf is the total number of input bytes transferred during the measurement period.

IST579I

attn is the number of times a channel program is initiated because the other host has data to send. This statistic cannot be correlated with any of the other statistics that are provided; it is simply a value that indicates the number of attention interrupts.

When compared over an interval of time, ATTN usually does not equal the sum of TIMERS, QDPTH, BUFCAP, and PRI at the other host. VTAM counts only the first event that initiates an I/O operation, and when both hosts try to write at once, one of the hosts receives an attention that is not counted in its tuning statistics.

timers is the number of times a channel program with write data is started because the period specified for queuing channel-to-channel PIUs has expired.

– If session traffic is heavy, the desirable value is 0.
– If session traffic is light, a low value rather than 0 is desirable.

  Increasing the DELAY operand on the LINE definition statement or using transmission priority 2 may decrease the value of *timers*.

qdpth is the number of times a channel program is initiated because the queue limit has been reached. This number should be higher than *timers*.

Note: If DELAY=0 is specified for the channel-to-channel adapter, the TIMERS and QDPTH tuning statistics may be misleading.

If DELAY=0, *qdpth* indicates the number of channel programs that wrote data to the channel-to-channel adapter. VTAM determines the QDPTH limit based on usage **except** in the case of DELAY=0.

If DELAY=0, *timers* does not increment.

IST580I

bufcap is the number of times a channel program with write data is initiated because there is enough data to fill the read buffers of the host on the other end of the channel.

– *bufcap* will also be incremented if a channel program with write data is initiated due to residual PIUs left on the data queue after a channel program with write data containing a full write buffer of data has completed.

– If *bufcap* is always 0, the other VTAM host has too many read buffers.

pri is the number of times a channel program with write data is started because a high priority PIU is on the outbound channel queue; that is, the PIU is running under transmission priority 2 or is a virtual route pacing response.

If this number is high and there is very little transmission priority 2 traffic over this channel, the minimum virtual route window sizes are probably too small. The higher this number is in relation to the sum of TIMERS + QDPTH + BUFCAP, the less outbound coattailing occurs, and the more CPU time is used for each PIU.

slodn indicates the number of times that this VTAM had channel programs with write data blocked by a slowdown condition in the other VTAM.

IST581I

ipiu is the number of inbound PIUs. The average number of PIUs for each channel program can be calculated from the **sending side** as OPIU / (CHNRM + CHMAX).

opiu is the number of outbound PIUs. The average number of output PIUs for each channel program with write data can be calculated as OPIU / (CHNRM + CHMAX).

dlrmax is a decimal value that indicates the maximum number of dump-load-restart requests that were awaiting processing or were being processed at one time during the interval. This number refers to the entire domain, not to the SNA controller named in the report. The dump-load-restart subtask processes the following types of requests:

– Dump, load, or restart of an NCP
– Some VTAM messages to the operator that require a reply
– Session establishment and termination processing for a local major node
– Any I/O to a configuration restart or NODELST file.

This value can be used to determine the proper setting for the DLRTCB start option, which determines how many dump-load-restart requests can be processed concurrently. If DLRMAX consistently exceeds DLRTCB, it indicates that VTAM is serializing requests on the available TCBs and that performance might be affected.

IST1022I

wrbuf is the total number of output bytes transferred during the measurement period.

System Action: Processing continues.

Operator Response: Follow the instructions of your system programmer to tune the system. To discontinue statistics recording, enter the MODIFY NOTNSTAT command.

Programmer Response: For additional information on tuning and analyzing tuning statistics, see the *z/OS Communications Server: SNA Network Implementation Guide*.

IST578I **CHNRM =** *chnrm* **CHMAX =** *chmax* **RDBUF =** *rdbuf*

Explanation: VTAM issues this message as part of a message group. The first message in the group is IST577I. See the explanation of that message for a complete description.

IST579I **ATTN =** *attn* **TIMERS =** *timers* **QDPTH =** *qdpth*

Explanation: VTAM issues this message as part of a message group. The first message in the group is IST577I. See the explanation of that message for a complete description.

IST580I **BUFCAP =** *bufcap* **PRI =** *pri* **SLODN =** *slodn*

Explanation: VTAM issues this message as part of a message group. The first message in the group is IST577I. See the explanation of that message for a complete description.

IST581I IPIU = *ipiu* **OPIU =** *opiu* **DLRMAX =** *dlrmax*

Explanation: VTAM issues this message as part of a message group. The first message in the group is IST577I. See the explanation of that message for a complete description.

IST582I 'EVERY' INVALID FOR TRACE OF ID = *hostpuname* **— OPERAND IGNORED**

Explanation: VTAM issues this message if the operator attempts to start or terminate a buffer or I/O trace with the SCOPE=ALL or EVERY option for the host PU name *hostpuname* or ISTIRN. The SCOPE=ALL or EVERY option is not supported for host PU trace.

System Action: VTAM ignores the SCOPE=ALL or EVERY option. The trace is initiated or terminated only for the specified node.

Operator Response: None.

Programmer Response: None.

IST583I CONFIG *configname* **NOT PROCESSED — SYSDEF TASK NOT ATTACHED**

Explanation: The system definition subtask, ISTSDCLM, has not been reattached because it has exceeded its maximum abend count. The command for the resource identified by the *configname* field cannot be successfully completed.

System Action: If the command is an activate command for a major node, path definition set, or DRDS data set, the command fails. For a VARY INACT command for a major node or path definition set, virtual storage is lost. Further activate or deactivate commands will fail in the same way, and produce this same message again until VTAM is restarted.

Operator Response: Save the system log for problem determination.

Programmer Response: Correct the problem that caused an unexpected number of subtask ABENDs. Then restart VTAM to regain use of the subtask.

IST585E VTAM UNABLE TO CLOSE *applname* **— RESOURCES MAY BE LOST TO VTAM**

Explanation: VTAM issues this message when the VTAM application program *applname* has issued a CLOSE ACB macro or when VTAM has attempted to close the application program's access method control block (ACB).

This message is often displayed when the application issues a CLOSE ACB macro and then the application's underlying task is abnormally terminated. This abnormal termination results in VTAM attempting to close the ACB on behalf of the application. VTAM may not succeed in closing the ACB, but the CLOSE ACB issued by the application still succeeds.

It is also possible that a system error occurred.

System Action: The ACB may not be closed and system resources may be lost.

Operator Response: This is probably a software error. If this message appears for several different application programs or if critical resources are tied up, halt VTAM and restart it. In addition, save the system log and problem determination.

If this message appears during a halt of VTAM, enter a HALT CANCEL command.

Programmer Response: Analyze the output from the operator to determine the cause of the problem.

Verify that the failing job step includes a SYSABEND DD statement.

See *z/OS Communications Server: SNA Diagnosis Vol 1, Techniques and Procedures* for more information on application program problems.

IST587I IRN STORAGE {EXCEEDED|DEPLETED} CAUSED BY SLOWDOWN OF NODE *nodename*

Explanation: This message describes the status of the VTAM storage used for intermediate routing node (IRN) traffic that cannot be routed to an adjacent subarea node.

- If the status is **EXCEEDED**, the user-specified storage limit for intermediate routing node slowdown processing was exceeded.

- If the status is **DEPLETED**, the intermediate routing node buffer manager was unable to obtain pageable storage.

The adjacent subarea node that is in slowdown is identified by *nodename*.

System Action: Intermediate routing node traffic will be kept in fixed buffers.

Operator Response: Consider deactivating the node that is in slowdown. This will free all the fixed and pageable storage associated with the node. However, user sessions may be disrupted.

Programmer Response: If the limit was exceeded, consider modifying the IRNSTRGE start option. See the *z/OS Communications Server: SNA Resource Definition Reference* for more information.

IST588I SIT TRACE STATUS = *status*

Explanation: This is one of a series of messages that appears as the result of a DISPLAY command requesting the status of a line.

The scanner interface trace (SIT) helps diagnose NCP and line problems. See the *z/OS Communications Server: SNA Diagnosis Vol 1, Techniques and Procedures* for a description of *status*.

System Action: Processing continues.

Operator Response: None.

Programmer Response: None.

IST589I ERROR FOR ID = *ncpname*, **CODE =** *code*, **NET =** *netid*

Explanation: An error has occurred during activation of gateway NCP *ncpname*. VTAM was unable to record the network address of *ncpname* as assigned in the nonlocal network *netid*. For VTAM to accept a request for an LU-LU session through the gateway NCP of another network, VTAM in the local network must be able to record that NCP's network address in the other network.

Network addresses are assigned by VTAM based on the NETID, MAXSUBA, and SUBAREA operands of the BUILD or NETWORK definition statements in the definition of that gateway NCP.

code indicates the reason for the error and can be one of the following:

1 There already exists in the local network a record of a gateway NCP in the nonlocal network *netid* with the same subarea number.

2 The subarea range in the network *netid* is not known. The MAXSUBA operand was not specified in the BUILD or NETWORK definition statement in the definition of *ncpname*. VTAM must be supplied the subarea range of *netid* in order to assign a network address.

3 There is insufficient storage to record the network addresses.

System Action: Activation of the gateway NCP *ncpname* continues; however, VTAM will either not be able to accept a request for a LU-LU session through *ncpname* from the network *netid* or, if *code* is **1**, will route a session request through a different gateway NCP. Results are unpredictable.

Operator Response: Save the system log and print the major node definition for problem determination.

Programmer Response: The value of *code* determines the response:

1 Examine the definition decks of the gateway NCPs that have been activated, or are being activated, for the network *netid*. Check the NETID and SUBAREA operands of the BUILD or NETWORK definition statements. There should be no duplicate subarea numbers for the same network.

2 Code MAXSUBA in the BUILD or NETWORK definition statement in which **NETID =** *netid* has been specified.

3 There is insufficient storage to record the gateway NCP's network address in network *netid*. Have the operator cancel nonessential jobs or deactivate an unused part of the network to prevent further losses. You may have to halt and restart VTAM if there are too many failures.

IST590I *type action* **FOR PU** *puname* **ON LINE** *linename*

Explanation: VTAM issues this message when:

- A connection for a switched physical unit has been established as a result of a dial-in from the switched PU.
- A connection for a switched physical unit has been established as a result of a dial-out to the switched PU.
- An attempt to establish a connection to a switched physical unit was not successful.
- A connection of a switched physical unit has been terminated.

type can one of the following:

CONNECTIN Indicates a dial-in connection from a switched PU.

CONNECTOUT Indicates a dial-out connection to a switched PU.

CONNECTION Indicates an established connection with a switched PU.

action can one of the following:

ESTABLISHED Indicates the dial-in or dial-out connection from a switched PU was successful.

FAILED Indicates a dial-out connection to a switched PU was not successful.

TERMINATED Indicates an established connection with a switched PU has been terminated.

puname is the name of the switched physical unit.

linename is the name of the logical line over which a connection is established, failed, or terminated. If multiple paths to the switched PU have been defined, and *type* and *action* are **CONNECTOUT FAILED**, then *linename* is the name of the last logical line over which the connection was attempted.

VTAM issues this message in the following situations:

- If *type* and *action* are **CONNECTIN ESTABLISHED**, a connection for the switched physical unit *puname* has been established over the logical line *linename* as a result of a dial-in from a switched PU.

  Note: This action can also be displayed if the dial occurs from the NCP.
- If *type* and *action* are **CONNECTOUT ESTABLISHED**, a connection for the switched physical unit *puname* has been established over the logical line *linename* as a result of a dial-out from a switched PU.

  The dial-out was caused by one of the following:
  - An application program attempting to establish a session with a switched LU associated with the PU.
  - In response to a VARY DIAL command to establish a switched connection to a type 2 or 2.1 device.
- If *type* and *action* are **CONNECTOUT FAILED**, an attempt to establish a connection to switched PU *puname* over the logical line *linename* was not successful.

  If multiple paths to the switched PU have been defined, *linename* is the name of the last logical line over which the connection was attempted.

  This message might be followed by a message group beginning with message IST1139I. This message group provides more information about the **CONNECTOUT** failure.
- If *type* and *action* are **CONNECTION TERMINATED**, the connection of the switched PU *puname* over the logical line *linename* has been terminated.

System Action: Processing continues.

Operator Response: If *type* and *action* are **CONNECTOUT FAILED**, determine why the line is not available and take corrective action. Otherwise, no response is needed.

Programmer Response: None.

IST591E VTAM COMMAND CANCELED DUE TO VTAM TASK ABEND — *code* — RETRY COMMAND

Explanation: The VTAM task has abended while processing an operator command. The command cannot be identified, but it is being canceled. Recovery of the VTAM task is being attempted. See the appropriate operating system codes manual for the meaning of the hexadecimal abend code *code*.

System Action: VTAM processing continues.

Operator Response: This is probably a software error. Check the system log to determine which command was not processed. Then reenter the command that caused the failure. If the failure recurs and completion of this command is required to proceed with VTAM, halt VTAM and then start it again. Save the system log and dump for problem determination.

Programmer Response: See the *z/OS Communications Server: SNA Diagnosis Vol 1, Techniques and Procedures* for information on the abend procedure.

IST592I VTAM MAIN TASK ABEND — CODE *code* — VTAM IS BEING TERMINATED

Explanation: The VTAM main task abended with the *code* specified. See the appropriate operating system codes manual for the meaning of the hexadecimal abend code *code*.

System Action: The operating system terminates the VTAM main task and all of the subtasks. All VTAM processing terminates.

Operator Response: Save the system log and dump for problem determination.

Programmer Response: See the *z/OS Communications Server: SNA Diagnosis Vol 1, Techniques and Procedures* for information on the abend procedure. Have the operator restart VTAM.

IST593I ISTPDCLU {PD TRACE|SESSION AWARENESS} SESSION ENDED

Explanation: An UNBIND request has been received for one of the LU-LU sessions between the VTAM LU subtask, ISTPDCLU, and the NetView program or NCCF LU, DSIAMLUT. There are two parallel LU-LU sessions. The PD TRACE session is used to transfer the contents of PIU trace buffers filled by VTAM. The session awareness session is used to transfer buffers containing session awareness data. This data is used by the NetView program or NLDM.

System Action: If **PD TRACE** is specified and the VTAM PIU trace buffers become full after the PD TRACE session has ended, PIU trace buffers will be re-used beginning with the buffer containing the oldest trace data. This overwriting will continue until the PD TRACE session is re-initiated. Thus, VTAM always maintains the PIUs most recently traced within its PIU trace buffers. The VTAM subtask ISTPDCLU waits for a new BIND request.

If **SESSION AWARENESS** is specified, VTAM frees the existing session awareness buffers. The NetView program or NLDM receives a refresh of all existing active sessions in the system when it requests the restart of session awareness tracing.

Operator Response: Consult the NetView or NLDM terminal operator to determine the cause of the UNBIND request. If further VTAM PIU tracing is desired, reactivate the PD TRACE session.

Programmer Response: None.

IST594I ISTPDCLU *macroname* FAILED *reason1* [*reason2*]

Explanation: The macro *macroname*, issued by VTAM on behalf of the VTAM LU subtask ISTPDCLU, failed.

If *macroname* is **OPEN ACB**, *reason1* is the ACBERFLG value, and *reason2* is not displayed. See the *z/OS Communications Server: IP and SNA Codes* for a description of the hex value for *reason1*.

If *macroname* is an RPL-based macro, *reason1* is the return code RPLRTNCD and *reason2* is the feedback code RPLFDB2. See the *z/OS Communications Server: IP and SNA Codes* for a description of *reason1* and *reason2*.

System Action: If the OPEN ACB macro failed, the VTAM subtask ISTPDCLU is detached and reattached by VTAM. Up to 25 attempts will be made to re-open ISTPDCLU's ACB.

If the SEND macro failed, the contents of the buffer being sent are lost. Processing on behalf of the ISTPDCLU subtask continues.

Operator Response: Save the system log for problem determination.

Programmer Response: Use the ACBERFLG value (for an OPEN ACB failure) or the return-feedback code combination (for an RPL-based macro) to help you determine the cause of failure.

IST595I **IRNLIMIT =** *irnlimitK*, **CURRENT =** *currentirn***K, MAXIMUM =** *maximumirn***K**

Explanation: This message is part of a group of messages that VTAM issues in response to a DISPLAY BFRUSE command. The first message in the group is IST449I. See the explanation of that message for a complete description.

IST597I **CAPABILITY–PLU** *capability***,SLU** *capability***,SESSION LIMIT** *limit*

Explanation: This message is part of a group of messages that VTAM issues in response to a DISPLAY ID command for an application program, a cross-domain resource, or a logical unit. This message shows the capability of a node to be either a primary logical unit (PLU) or a secondary logical unit (SLU).

limit is the maximum number of sessions that can exist for that node and is expressed in decimal with leading zeros.

capability is one of the following:

ENABLED
The node can act as a PLU or an SLU or both. Local non-SNA devices will always display an enabled capability.

DISABLED
The node is temporarily unable to act as a PLU or an SLU (until it is in an enabled state). However, a session could be queued. The device may be powered off. This could possibly be cleared by powering the device on. If an application whose ACB was opened will be the SLU, and a SETLOGON START has not been issued, the application will indicate DISABLED.

INHIBITED
The node is not ready to establish a session, nor does it want any sessions to be queued. It cannot act as a PLU or an SLU. A logical unit without an SSCP-LU session indicates INHIBITED for its PLU and SLU capabilities, as would a CDRSC that had been deactivated. An application without an open ACB would indicate **INHIBITED**, as well as an application that issued SETLOGON QUIESCE.

UNSTABLE
The node is attempting some type of error recovery. This could be due to ERP, an INOP, or session termination.

limit is **NONE** if the resource is an independent LU.

System Action: Processing continues.

Operator Response: If *capability* is **DISABLED** for a device, ensure that the device is powered on.

If *capability* is **DISABLED** for an application, ensure that the application has issued SETLOGON OPTCD=START.

If *capability* is **INHIBITED** for an application, ensure that the ACB has been opened and that SETLOGON START has been entered.

Programmer Response:

Note: When *capability* for a device LU is **INHIBITED**, it normally indicates that VTAM has been informed of that capability by the device. This information is passed to VTAM on the X'0C' control vector on a NOTIFY or ACTLU RU. To capture the RU, use a VTAM internal trace with OPT=PIU or a BUFFER trace of the LU before activating the device or before repeating the procedure that led to the inhibited state. Refer to *VTAM Data Areas* for the format of the RUs and the X'0C' (LU capabilities) control vector.

See *z/OS Communications Server: SNA Programming* for details on the SETLOGON macro.

IST599I **REAL NAME =** *realname*

Explanation: This message is part of a group of messages that VTAM issues in response to a DISPLAY ID command. *realname* is the real network-qualified name of the resource being displayed.

Notes:

1. VTAM does not issue IST599I if the name specified in the DISPLAY ID command is the real name.
2. If the name is not known, *realname* will be ***NA***.

IST602I VARY FAILED ID = *nodename* — HIGHER NODE HAS BECOME INACTIVE

Explanation: A VARY command failed because a preceding VARY command deactivated a higher-level node. The previous VARY command deactivated the higher-level node and, in turn, it will deactivate *nodename*.

System Action: VTAM rejects the VARY command. The higher-level node and all subordinate nodes are inactive.

Operator Response: Save the system log for problem determination.

Programmer Response: You may reactivate both the higher-level node and *nodename*. The higher-level node may have been deactivated during error recovery processing. Check the system log to determine whether the deactivation was caused by error recovery or by a sequence of commands.

IST605I ERROR FOR ID = *nodename* – *text1* : *text2*

Explanation: A request from *nodename* failed, or a response sent by *nodename* contained data that was not valid. This message might be followed by another message. The following example shows the messages that can be issued with IST605I.

```
 IST605I  ERROR FOR ID = nodename – text1 : text2
[IST1590I  PU NETID DIFFERENT THAN HOST AND CONTACTED REQUEST]
[IST1591I  NCP NOT LOADED]
[IST1592I  NETID IN XID DID NOT MATCH NETID OF PU]
[IST1593I  RESOURCE TYPE NOT VALID]
[IST1594I  CPNAME IN CONTACTED REQUEST SAME AS SSCPNAME]
[IST1595I  LINK STATION NOT ASSOCIATED WITH AN NCP]
[IST1596I  SWITCHED LINK STATION STATE PCTD2 NOT VALID FOR LOAD]
[IST1597I  SWITCHED CALL=IN NCP NOT VALID]
[IST1598I  LEASED LINK STATION STATE PCTD2 NOT VALID FOR LOAD]
[IST1599I  NCP INDICATES LOAD REQUIRED BUT LOAD=NO]
[IST1600I  LOAD MODULE MISMATCH – LOAD=NO]
[IST1602I  RU ERROR: EXTRA CV X'xx']
[IST1603I  RU ERROR: INVALID POSITIVE RESPONSE]
[IST1604I  RU ERROR: LENGTH, FORMAT, OR TYPE NOT VALID]
[IST1605I  RU ERROR: MISSING CV X'0B']
[IST1606I  DIAL RETRY FAILED]
[IST1607I  RU ERROR: RESPONSE TOO LONG]
[IST1608I  RU ERROR: RESPONSE TOO SHORT]
[IST1609I  CV X'0B' INDICATES ADJACENT LINK STATION NOT SUPPORTED]
[IST1610I  CORRELATOR MISMATCH – LOAD=NO]
[IST1611I  CORRELATOR MISMATCH – NCP ACQUIRED BEFORE ACTIVATION]
[IST1612I  LOAD MODULE MISMATCH – EXPECTED loadmod1 FOUND loadmod2]
 IST314I  END
```

text1 : *text2* specifies the RU in error and is one of the following:

REQUEST : CONTACTED
See the explanation of the second message in the group for more information.

RESPONSE : ACTPU
See the explanation of the second message in the group for more information.

RESPONSE : RNAA
An error occurred on an **RNAA** response received from an NCP, causing an invalid response to be returned to VTAM. This is probably an NCP error.

System Action: For **RESPONSE : RNAA**, *nodename* is deactivated.

Operator Response: For **RESPONSE : RNAA**, save the system log for problem determination.

Programmer Response: For **RESPONSE : RNAA**, if the node should be activated, reactivate it. If the problem persists, try to re-create the problem while an I/O trace or buffer trace is running for the affected *nodename*. If *nodename* is link-attached, run a line trace for the affected line.

Enter a MODIFY TRACE,ID=*nodename* command.

IST607I *command* **FOR** *nodename* **FAILED — INVALID NODE TYPE OR STATE**

Explanation: The operand specified in *command* is not applicable for *nodename* because the type or state of *nodename* is invalid for the operation requested.

See Chapter 14, “Command and RU types in VTAM messages” on page 685 for a description of *command*.

System Action: VTAM rejects the command. Other processing continues.

Operator Response: Reenter the command for a resource that is either the valid node type or in the valid state for the command. Use the DISPLAY ID command to determine the current resource state. See *z/OS Communications Server: SNA Operation* for additional information on *command*.

Programmer Response: None.

IST608I *command* **FOR ID =** *minornode* **FAILED — HIGHER NODE:** *highernode* **NOT ACTIVE**

Explanation: VTAM issues this message when a *command* was entered to activate the resource *minornode* (a logical unit, physical unit, physical unit type 4, or link). The command failed because its higher-level node *highernode* is not active.

See Chapter 14, “Command and RU types in VTAM messages” on page 685 for a description of *command*.

- If *minornode* is a logical unit, *highernode* is a physical unit.
- If *minornode* is a physical unit or a physical unit type 4, *highernode* is its link.
- If *minornode* is a link, *highernode* is the physical unit specified on the PHYSRSC operand on the GROUP definition statement for the line group.

  If the physical unit, defined in the NCP definition, whose name is specified by the PHYSRSC keyword is a switched PU that is not currently connected, then *highernode* is the physical line.

highernode must be active before *minornode* can be activated.

System Action: VTAM rejects the command.

Operator Response: Enter a VARY ACT command for resource *highernode* before activating resource *minornode*.

Programmer Response: None.

IST610I **LINE** *linename* **— STATUS** *linestatus*

Explanation: VTAM issues this message as part of a group of messages in response to a DISPLAY command. See the explanation of message IST396I for a complete description of the group.

See the *z/OS Communications Server: IP and SNA Codes* for a description of *linestatus*.

IST611I **ADJACENT SSCP TABLE FOR** *resource* **[IN** *netid***]**

Explanation: This message is part of a group of messages that VTAM issues in response to a DISPLAY ADJSSCPS command. The DISPLAY ADJSSCPS command requests information about adjacent SSCPs used to reach the destination SSCP or CDRSC *resource*.

```
 IST350I  DISPLAY TYPE = ADJACENT SSCP TABLE
 IST611I  ADJACENT SSCP TABLE FOR resource [IN netid]
[IST1705I SORDER = so_value FROM START OPTION]
[IST1704I SORDER = so_value FROM ADJACENT SSCP TABLE]
 IST1220I   SSCPNAME NETID    CURRENT STATE  ROUTING STATUS
 IST624I    sscpname[netid]   current_state  routing_stat us
:
 IST314I  END
```

Note: IST1704I and IST1705I are displayed only when VTAM is enabled for APPN. They are never both displayed in the same message group.

IST350I

This message identifies the type of information shown in the display. DISPLAY TYPE is always **ADJACENT SSCP TABLE** in this message group.

IST611I

resource is the name of the resource that was specified on the CDRSC operand of the command. If a network-qualified name was entered on the command line, VTAM issues the network ID *netid*.

IST624I

VTAM issues this message for each SSCP *sscpname* in the adjacent SSCP table being displayed and identifies the names of the adjacent SSCPs associated with *resource*.

sscpname is the name of the adjacent SSCP for which information is displayed.

netid is displayed only if the network ID of *sscpname* is known to VTAM and CDRSC is specified on the DISPLAY command.

current_state and *routing_status* are displayed when CDRSC is specified on the command.

– For *current_state* information, see the *z/OS Communications Server: IP and SNA Codes*. ****NA**** is displayed if the SSCP is not defined to VTAM.

– *routing_status* can be one of the following:

FAILURE
The most recent routing attempt to the SSCP failed.

SUCCESS
The most recent routing attempt to the SSCP was successful. This does not indicate that session establishment was successful.

****NA****
Routing status is not available.

IST1220I

This message is displayed only when the CDRSC operand is specified on the command and is a header message for the list of adjacent SSCPs that follows in message IST624I.

IST1704I or IST1705I

so_value indicates the search order associated with the adjacent SSCP table being displayed.

System Action: Processing continues.

Operator Response: None.

Programmer Response: None.

IST617I DEACTIVATION IN PROGRESS FOR *nodename*

Explanation: Processing of a VARY INACT command for a CDRM major or minor node resulted in the deactivation of *nodename*.

System Action: The node *nodename* becomes inactive.

Operator Response: None.

Programmer Response: None.

IST619I ID = *nodename* **FAILED — RECOVERY IN PROGRESS**

Explanation: VTAM recognized a failure condition for node *nodename* and is attempting to recover the node. See subsequent messages for the results of that recovery attempt.

System Action: Users of *nodename* or devices attached to *nodename* may be notified of the failure. VTAM attempts to recover *nodename*.

Operator Response: Wait for additional messages indicating the success or failure of the recovery attempt.

Programmer Response: None.

IST621I **{RECOVERY SUCCESSFUL|SSCP TAKEOVER COMPLETE} FOR NETWORK RESOURCE** *nodename*

Explanation: Either *nodename* was recovered successfully or a takeover for a link with active sessions completed successfully. The application programs previously connected to *nodename* or nodes subordinate to it have been notified and may use those nodes.

System Action: Node *nodename* is returned to an active state. Active states of resources include the connectable (CONCT) state.

Operator Response: None.

Programmer Response: None.

IST623I *tabletype* **ADJACENT SSCP TABLE [FOR** *netid***]**

Explanation: This message is part of a group of messages that VTAM issues in response to a DISPLAY ADJSSCPS command when one of the following occurs:
- No specific ADJSSCP list is defined for the CDRM or NETID specified on the command
- Neither CDRM nor NETID is specified on the command
- SCOPE=ALL is specified on the command.

The DISPLAY ADJSSCPS command requests information about adjacent SSCPs used to route to a destination SSCP or cross-domain resource. A complete description of the message group follows.

```
 IST350I  DISPLAY TYPE = ADJACENT SSCP TABLE
 IST623I  tabletype ADJACENT SSCP TABLE [FOR netid]
[IST1705I SORDER = so_value FROM START OPTION]
[IST1704I SORDER = so_value FROM ADJACENT SSCP TABLE]
 IST624I    sscpname
:
 IST314I  END
```

If SCOPE=ALL is specified on the command, the IST623I subgroup is repeated for all defined and dynamic ADJSSCPs which match the specifications on the command operands.

Note: IST1704I and IST1705I are displayed only when VTAM is enabled for APPN. They are never both displayed in the same message group.

IST350I

This message identifies the type of information shown in the display. DISPLAY TYPE is always **ADJACENT SSCP TABLE** in this message group.

IST623I

tabletype identifies which adjacent SSCP table is being displayed.

– If *tabletype* is **DEFAULT**, no specific list was defined for the specified CDRM or NETID. The list being displayed was defined as a default list for the specified NETID or the default table for all networks.

  See the *z/OS Communications Server: SNA Resource Definition Reference* for more information about defining adjacent SSCP tables.

– If *tabletype* is **DYNAMIC**, no specific list was defined for the specified CDRM or NETID, and no default list was defined. The list being displayed was created dynamically for the specified NETID or the default table for all networks.

  See the *z/OS Communications Server: SNA Network Implementation Guide* for more information about dynamic adjacent SSCP tables.

netid is the network ID of the resource. It is displayed when the DISPLAY ADJSSCPS command specifies a NETID and a default adjacent SSCP list is defined for the specified network.

IST624I

VTAM issues this message for each SSCP *sscpname* in the adjacent SSCP table being displayed.

IST1704I or IST1705I

so_value indicates the search order associated with the adjacent SSCP table being displayed.

System Action: Processing continues.

Operator Response: None.

Programmer Response: None.

IST624I *sscpname* **[[***netid***]** *current_state routing_status***]**

Explanation: VTAM issues this message as part of a group of messages in response to a DISPLAY ADJSSCPS command or a DISPLAY ID command for a CDRSC when SCOPE=ALL. It is preceded by IST611I, IST623I, or IST1333I. See the explanation of those messages for a complete description.

IST627I *nodename* **— INSUFFICIENT STORAGE**

Explanation: VTAM issues this message when a MODIFY TRACE command, MODIFY NOTRACE command, TRACE start option, or NOTRACE start option was entered to activate or deactivate a VTAM trace for node *nodename*, but sufficient storage was not available to build a parameter list.

System Action: VTAM rejects the command or start option.

Operator Response:

- If VTAM issues this message in response to a command, wait a few minutes, and reenter the command. If the error persists, enter a DISPLAY BFRUSE command. Enter the DISPLAY STORUSE command to display storage usage for storage pools. Save the system log and dump for problem determination.
- If VTAM issues this message during startup, wait until VTAM is initialized, and enter a DISPLAY BFRUSE command. Save the system log and dump for problem determination.

Programmer Response: Verify that the operator entered the buffer pool or CSA start options as specified in the start procedures.

Increase storage as required. For insufficient storage errors, you might want to redefine your buffer pool or CSA start options. If the start option cannot be modified using the MODIFY VTAMOPTS command, you must modify the VTAM start options file (ATCSTRxx) and restart VTAM to use the start option.

- See the *z/OS Communications Server: SNA Migration* to determine the storage requirements for VTAM.
- See the *z/OS Communications Server: SNA Resource Definition Reference* for a description of VTAM start options.
- See the *z/OS Communications Server: SNA Operation* for information about the DISPLAY BFRUSE Command, theDISPLAY STORUSE Command, and the MODIFY VTAMOPTS Command.
- See the *z/OS Communications Server: SNA Network Implementation Guide* for an explanation and description of buffer pools and for general information on buffer pool specification and allocation.
- See the *z/OS Communications Server: SNA Diagnosis Vol 2, FFST Dumps and the VIT* for information about analyzing dumps and about analyzing storage using the VIT analysis tool, if external trace is active.

IST632I **BUFF BUFF CURR CURR MAX MAX TIMES EXP/CONT EXP**

Explanation: VTAM issues this message as part of a message group in response to a DISPLAY BFRUSE,BUFFER=SHORT command. A complete description of the message group follows.

```
 IST350I DISPLAY TYPE = BUFFER POOL DATA
 IST632I BUFF       BUFF    CURR    CURR    MAX    MAX     TIMES  EXP/CONT   EXP
 IST633I  ID        SIZE    TOTAL   AVAIL   TOTAL  USED    EXP    THRESHOLD  INCR
 IST356I bpid[Q][F] bufsize curtot curavail maxtot maxused times  exp/cont   incr
 IST449I limitname = csa, CURRENT = current, MAXIMUM = maxlevel
 IST790I MAXIMUM type USED = maxK
[IST449I CSA24 = csa, CURRENT = current, MAXIMUM = maxlevel]
[IST790I MAXIMUM type USED = maxK]
 IST595I IRNLIMIT = irnlimitK, CURRENT=currentirnK MAXIMUM = maximumirnK
 IST981I VTAM PRIVATE: CURRENT = currentK, MAXIMUM USED = maximumK
 IST314I END
```

Message IST356I is repeated for each of the VTAM buffer pools.

IST350I

This message identifies the type of information shown in the display. For this message group, type is always **BUFFER POOL DATA**.

IST632I and IST633I

These messages are header messages for the information displayed in IST356I.

IST356I

bpid is the name of the buffer pool. See the *z/OS Communications Server: SNA Network Implementation Guide* for an explanation and description of buffer pools and for general information on buffer pool specification and allocation.

Q, if present, indicates that a request is queued for this pool. This field is usually blank.

F, if present, indicates that dynamic buffering has failed. This field is usually blank.

bufsize is a decimal value that indicates the number of bytes in each buffer.

For IOBUF an overhead value of 87 bytes should be added to the *bufsize* value in this message. See the *z/OS Communications Server: SNA Resource Definition Reference* for information on buffer pool default sizes.

curtot is a decimal value that indicates the total number of buffers in the pool.

curavail is a decimal value that indicates the number of available buffers that are currently not in use.

maxtot is a decimal value that indicates the highest number of buffers contained in this pool at any one time since the last buffer pool trace record was written.

maxused is a decimal value that indicates the highest number of buffers in use at any one time since the last buffer pool trace record was written.

times is a decimal value that indicates how many times this pool has been expanded since the last buffer pool trace record was written. If the value of *times* is greater than 99999, ***** is displayed in this field.

exp is a decimal value used for triggering expansion.

If the number of buffers not in use falls below this value, VTAM adds additional buffers. This field contains **N/A** if dynamic buffering has been suppressed.

cont is a decimal value used for triggering contractions.

If the number of available buffers becomes larger than this value, VTAM checks the availability of dynamically obtained buffers. If available, VTAM releases those buffers. However, for any available buffer to be released, every buffer on the same page must also be available since buffers are released in pages.

This value is defined only when the buffer pool is in expansion mode. If blanks appear in the display, the buffer pool is not currently in expansion mode.

If dynamic buffering has been suppressed, this column contains **N/A**.

incr is a decimal value that indicates how many buffers are to be added to the buffer pool during dynamic expansion.

Buffers are added in full pages. Thus, this number may be larger than the number used when defining the buffer pool. If dynamic buffering is not available, this field contains **N/A**.

IST449I, IST790I, IST595I, and IST981I subgroup

See message IST449I on page 126 for a description of this message subgroup.

System Action: Processing continues.

Operator Response: None.

Programmer Response: None.

IST633I ID SIZE TOTAL AVAIL TOTAL USED EXP THRESHOLD INCR

Explanation: VTAM issues this message as part of a message group in response to a DISPLAY BFRUSE,BUFFER=SHORT command. See message IST632I for a complete description of the message group.

IST634I NAME STATUS SID SEND RECV VR TP NETID

Explanation: This message is part of group of messages that VTAM issues in response to a DISPLAY ID command for an application program, a cross-domain resource (CDRSC), the host cross-domain resource manager (CDRM), or a logical unit. Message IST634I is a column header for IST635I, which is repeated for each session partner *name*. A complete description of this part of the message group follows.

```
IST634I  NAME     STATUS       SID        SEND   RECV   VR   TP   NETID
IST635I  name     status    [sessid]     [send] [recv] [vr] [tp] [netid]
:
IST314I  END
```

name is the session partner name.

status is the session status and is described in the *z/OS Communications Server: IP and SNA Codes*.

sessid is the session identification (SID).

send is the send count in hexadecimal of the number of PIUs sent by the resource specified in the DISPLAY ID command. This count is applicable to normal data flow only.

recv is a count in hexadecimal of the number of PIUs received by the resource specified in the DISPLAY ID command. This count is applicable to normal data flow only.

Note: Blank values for *send* and *recv* mean that the send and receive counts are not available (in this host), nor is the indication whether BIND (/B) or UNBIND (/U) is in progress. A PU, for example, would not have SEND and RECV counts available.

vr is the virtual route number used by the session. This field is left blank if the session partners are in the same subarea.

tp is the transmission priority assigned to the session. This field is left blank if the session partners are in the same subarea.

netid identifies the network containing the session partner.

System Action: Processing continues.

Operator Response: None.

Programmer Response: None.

IST635I *name status* **[***sessid***] [***send***] [***recv***] [***vr***] [***tp***] [***netid***]**

Explanation: This message is part of a message group. The first message of the group is IST634I. See explanation of that message for a complete description.

IST636I CDRSCS OWNED BY *cdrmname* **—**

Explanation: This message is the first in a group of messages that VTAM issues in response to a DISPLAY ID command for an external cross-domain resource manager *cdrmname*. This message is a header for message IST080I, which lists the cross-domain resources owned by *cdrmname*.

System Action: Processing continues.

Operator Response: None.

Programmer Response: None.

IST637I **SUBAREA=***subarea* **ELEMENT=***element* **SSCPID =** *sscpid*

Explanation: VTAM issues this message in response to a DISPLAY ID command for an external cross-domain resource manager.

subarea and *element* specify the subarea and element addresses of the external CDRM as defined in your network. If the subarea or element address is unknown, **N/A** will appear in this display.

sscpid is the SSCP identifier of the CDRM. *sscpid* will be displayed for a host CDRM and for an external CDRM with an SSCP-SSCP session with this host. *sscpid* is not available for a CDRM without an SSCP-SSCP session with this host and will be displayed as **N/A**.

System Action: Processing continues.

Operator Response: None.

Programmer Response: None.

IST638I **ADJNETSA =** *adjnetsa*, **ADJNETEL =** *adjnetel*

Explanation: This message is the first in a group of messages that VTAM issues in response to a DISPLAY ID command for an external cross-domain resource manager. A complete description of the message group follows. This group of messages may also appear as a part of another group of messages.

```
IST638I  ADJNETSA = adjnetsa, ADJNETEL = adjnetel
IST675I  VR = vr, TP = tp
IST639I  GWN = gwn, ADJNET = adjnet
IST640I  hostname ADDR IN ADJNET - SA = hostsa, EL = hostel
IST641I  GATEWAY PATH SELECTION LIST - status
IST642I  ADJNET     GWN    SUBAREA  ELEM   ADJNETSA   ADJNETEL
IST643I [adjnet]   [gwn]   [adjsa]  [el]  [adjnetsa] [adjnetel]
```

IST638I

Message IST638I indicates the subarea address, *adjnetsa*, and the element address, *adjnetel*, of the external CDRM as defined in the adjacent network. If these addresses are unknown, this message will not appear in the display.

IST675I

Message IST675I indicates the virtual route number (*vr*) and the transmission priority (*tp*) of the CDRM session in the adjacent network. VTAM issues this message only if the route information in the adjacent network is known.

IST639I

Message IST639I indicates the gateway NCP name, *gwn*, used on the path to the CDRM in the adjacent network, *adjnet*. VTAM issues this message only if the gateway NCP name and adjacent network name are both known.

IST640I

Message IST640I indicates the name of your host, *hostname*, its subarea address, *hostsa*, and its element address, *hostel*, as defined in the external CDRM's network. If the name and address are unknown, this message will not appear in the display.

IST641I

Message IST641I is a header line identifying the gateway path selection list that follows. The gateway path selection list is a list of alternate gateway NCPs used in establishing the cross-network SSCP-SSCP session (that is, the session between your host CDRM and an external CDRM in an adjacent network). If *status* does not appear, then messages IST642I and IST643I will follow with a list of gateway NCPs. If *status* is **DOES NOT EXIST**, then no gateway NCP is defined for the CDRM and messages IST642I and IST643I will not appear.

Each entry in the list contains parameters used to select a particular gateway NCP for establishing the session. Once a session is active, other messages identify the path used to establish the SSCP-SSCP session.

IST642I and IST643I

Message IST642I is a header line for the data displayed in message IST643I. The information displayed by message IST643I is obtained from the operands defined on the GWPATH definition statement in the CDRM major

node. VTAM issues message IST643I for each GWPATH definition statement. If any of the information in the display is missing, the corresponding value was omitted from the GWPATH definition statement.

The information includes:

adjnet The network identifier of the adjacent network
gwn The name of the gateway NCP used on the path to the CDRM
adjsa The subarea address of the CDRM as defined in your network
el The element address of the CDRM as defined in your network
adjnetsa
The subarea address of the CDRM as defined in the adjacent network
adjnetel
The element address of the CDRM as defined in the adjacent network

System Action: Processing continues.

Operator Response: None.

Programmer Response: None.

IST639I **GWN =** *gwn*, **ADJNET =** *adjnet*

Explanation: This message is part of a group of messages. The first message in the group is IST638I. See the explanation of that message for a complete description.

IST640I *hostname* **ADDR IN ADJNET — SA =** *hostsa*, **EL =** *hostel*

Explanation: This message is part of a group of messages. The first message in the group is IST638I. See the explanation of that message for a complete description.

IST641I **GATEWAY PATH SELECTION LIST —** *status*

Explanation: This message is part of a group of messages. The first message in the group is IST638I. See the explanation of that message for a complete description.

IST642I **ADJNET GWN SUBAREA ELEM ADJNETSA ADJNETEL**

Explanation: This message is part of a group of messages. The first message in the group is IST638I. See the explanation of that message for a complete description.

IST643I **[***adjnet***] [***gwn***] [***adjsuba***] [***el***] [***adjnetsa***][***adjnetel***]**

Explanation: This message is issued as part of a message group. The first message in the group is IST638I. See the explanation of that message for a complete description.

IST644I *originpu* **TG [***adjnode***]** *destpu*

Explanation: This message is part of a group of messages. The first message of the group is IST533I. See the explanation of that message for a complete description.

IST645I *configname* **DEFINITION FAILED — NO VALID** *macrotype* **MACRO**

Explanation: During activation or resource takeover, the NCP definition, *configname*, failed for one of the following reasons:

- There is no valid *macrotype* definition statement in the NCP definition.
- The NETID operand was specified in each *macrotype* definition statement of the NCP definition, but none of the NETID values match the network ID of this host.
- There is no *macrotype* definition statement in which the value of the specified or defaulted SUBAREA operand matches the subareas of this host. For HOST definition statements, if SUBAREA is not specified, the subarea value defaults to 1, but this can cause a mismatch if the HOSTSA start option value was different. For PCCU definition statements, the SUBAREA operand value defaults to the subarea of this host.
- The HOST definition statement must be specified for locally attached pre-V4R3 NCPs.

- The BUILD definition statement was encountered before a valid PCCU definition statement (either the PCCU definition statement was not specified or none were found that specified a matching NETID and SUBAREA).

System Action: Activation of the NCP definition deck fails during network definition.

Operator Response: Save the system log for problem determination.

Programmer Response: Correct or include a *macrotype* definition statement with the proper NETID and SUBAREA values (or defaults).

IST650I **POLL =** *delay*, **NEGPOLL =** *negresponse*, **SESSION(S) =** *maxsessions*

Explanation: VTAM issues this message as part of a line-status display in response to a response to a DISPLAY ID command for a nonswitched polled line (non-SDLC line).

delay is the polling delay (the time delay between polling sequences) of the line expressed in a decimal number of seconds.

negresponse is the maximum number of consecutive negative polling responses accepted before polling of another terminal on the line.

maxsessions is the maximum number of consecutive line scheduling sessions allowed on the line.

System Action: Processing continues.

Operator Response: None.

Programmer Response: None.

IST652I *keyword* **IS A DUPLICATE KEYWORD IN THE TRACE/NOTRACE OPTION**

Explanation: *keyword* is specified more than once in the TRACE or NOTRACE start option string.

System Action: VTAM initialization does not process the TRACE or NOTRACE option, nor any following start options. Preceding start options have been processed.

Operator Response: When prompted by message IST1311A, do one of the following:
- Enter the TRACE or NOTRACE option correctly. You must also enter all succeeding options.
- Enter a blank to accept the default value.

Programmer Response: Correct your start options. See the *z/OS Communications Server: SNA Resource Definition Reference* for more information on VTAM start options.

IST654I **I/O TRACE = {ON|OFF}, BUFFER TRACE = {ON|OFF} [– AMOUNT =** *value***]**

Explanation: VTAM issues this message in response to a DISPLAY ID command for a traceable node other than a line. It indicates whether the I/O trace facility is active or inactive for that node, and whether the buffer trace facility is active or inactive for that node.

AMOUNT = *value* is displayed if **BUFFER TRACE = ON**. *value* represents the **AMOUNT** operand value specified on the TRACE start option or the MODIFY TRACE command, and indicates how much of the buffer's contents are traceable. *value* can be one of the following:

PARTIAL
The trace record has a maximum size of 256 bytes including header information.

FULL All of the buffer's contents are traceable.

Note: If **AMOUNT** is not specified when the buffer contents trace is activated, the default *value* **PARTIAL** is displayed.

For additional information on the buffer contents trace, refer to *z/OS Communications Server: SNA Diagnosis Vol 1, Techniques and Procedures*.

System Action: Processing continues.

Operator Response: None.

Programmer Response: None.

IST655I *tracetype* **TRACE STATUS =** *status*

Explanation: VTAM issues this message in response to a DISPLAY ID command or a DISPLAY TRACES,TYPE=SMS or a DISPLAY TRACES,TYPE=CNM command.

tracetype can be one of the following:

CNM
Communication Network Management (CNM) trace

LINE
Line trace

SMS
Storage Management Service (SMS) trace

TG Transmission group trace

status indicates the status of the trace being displayed.

- If a DISPLAY ID command is entered, this message indicates the status of the **LINE** or **TG** trace for the displayed line. This message is displayed only if a **LINE** or **TG** trace is active or in a pending state when the command is entered.

  For *status* information, see the *z/OS Communications Server: IP and SNA Codes*
- If a DISPLAY TRACES,TYPE=CNM command is entered, *status* indicates whether the **PDPIUBUF** and **SAWBUF** buffer traces are **ON** or **OFF**.
- If a DISPLAY TRACES,TYPE=SMS command is entered, *status* indicates whether the **SMS** buffer trace is **ON** or **OFF**.

System Action: Processing continues.

Operator Response: None.

Programmer Response: None.

IST656I **ACTIVATE REJECTED FROM UNDEFINED CDRM, SA** *subarea* **EL** *element*

Explanation: A cross-domain resource manager (CDRM) in an external domain sent a request to establish a session with your domain, via an ACTCDRM request. The request failed because that CDRM is not known to VTAM. It is not defined in your domain.

subarea is the subarea address of the external CDRM.

element is the element address of the external CDRM.

System Action: VTAM rejects the request. No session with that CDRM can be established.

Operator Response: Contact the operator of the domain with the subarea *subarea* to find out which CDRM was requested. Then enter a VARY ACT command for the CDRM major node that contains the definition for the inactive CDRM. This will enable the CDRMs external to your domain to establish sessions with your domain. Save the system log and network logs for problem determination.

Programmer Response: Examine the definition library to make sure that all CDRMs in external domains that might want to communicate with your domain are defined to VTAM.

IST658I *command* **COMMAND FAILED —** *uservar* **NOT FOUND**

Explanation: VTAM issues this message when a MODIFY USERVAR command or DISPLAY USERVAR command for USERVAR *uservar* fails because the USERVAR is not known to VTAM.

System Action: VTAM rejects the command. Processing continues.

Operator Response: Enter a DISPLAY USERVAR command to list all USERVARs known to VTAM. Enter the MODIFY USERVAR command with the correct USERVAR name.

Programmer Response: None.

IST660I *command* **FOR ID =** *nodename* **FAILED — PARM:** *parameter* **NOT VALID**

Explanation: VTAM issues this message when the *command* failed for *nodename* because an unacceptable parameter was entered.

- If *parameter* is **U=’** (blank), a line in a channel attached major node or a local SNA PU was defined without a device address, and the device address was not specified with the U operand on the VARY ACT command.
- If *parameter* is **U=***device_address*, a VARY ACT command specifying **U=***device_address* was entered for a line in a channel attached major node or a local SNA PU that was not active. This error occurs when *device_address* does not match the device address currently in use.
- If *parameter* is **LOGON=***controllu*, a controlling LU name was specified on the **LOGON** operand of a VARY ACT command for an application. Controlling LUs are only valid for logical units.
- If *parameter* is **RNAME**, this message can be issued for the following reasons:
  - If **RNAME=***nodename* was specified during activation of a communication controller, *nodename* is the name of a logical unit and is therefore not valid.
  - If the value specified in the **RNAME** *parameter* is not a valid link station name, the *command* fails.
  - If **RNAME=***backup* was specified, VTAM was not able to process backup link station *backup*.
  - If the value specified in the **RNAME** *parameter* does not match the NCP definition, the *command* fails.

System Action: VTAM rejects the command. Other processing continues.

Operator Response:

- If *parameter* is **U=’** (blank), reenter the VARY ACT command specifying the device address on the U operand.
- If *parameter* is **U=***device_address*, and the device address is correct, deactivate the line or PU and reenter the command.
- If *parameter* is **LOGON=***controllu*, see *z/OS Communications Server: SNA Operation* for information on the correct syntax of the VARY ACT command.
- If *parameter* is **RNAME**, reenter the command specifying a valid nodename or value for *parameter*.

Programmer Response:

- If *parameter* is **U=’** (blank), you may want to specify a default device address for the line or PU.
- Otherwise, no action is required.

IST663I *request* **REQUEST [{TO|FROM}** *adjnode***]** *action***, SENSE=** *code*

Explanation: This message is the first in a group of messages that VTAM issues when a request/response unit (RU) fails to complete successfully. A description of the message group follows.

```
IST663I  request REQUEST [{TO|FROM} adjnode] action, SENSE=code
IST664I  {REAL|ALIAS} {OLU|PLU}=luname1 {REAL|ALIAS} {DLU|SLU}=luname2
IST889I  SID = sessid
```

Note: One or more messages may follow IST889I. See “Additional messages” in this message explanation for more information.

IST663I

request is the name of the RU that failed. See Chapter 14, “Command and RU types in VTAM messages” on page 685 for a description of *request*.

action can be one of the following:

- **FAILED** indicates that the *request* did not complete successfully for the reason described by *code*.
- **PURGED** indicates that the *request* was purged because of the timeout value that was specified on the MODIFY IOPURGE command or on the IOPURGE start option. See the *z/OS Communications Server: SNA Operation* and the *z/OS Communications Server: SNA Resource Definition Reference* for more information.
- **RECEIVED** indicates that the *request* was received, but did not complete successfully for the reason described by *code*.

TO/FROM is not issued if the failing RU flows in a same domain session. For example, if the **INIT OTHER** RU failed, **TO/FROM** is not issued. **FROM** is issued only if a request failed, not as a reply to a request.

IST663I

adjnode is the SSCP which sent or is to receive the request, or the related resource to which the request was sent. If a CDINIT failed to initiate an adjacent SSCP for any reason, this message is issued in the following format:

```
IST663I  CDINIT REQUEST FROM SSCP1A FAILED, SENSE=0801000F
```

code provides additional information about the cause of the failure. See the *z/OS Communications Server: IP and SNA Codes* for a description of *code*.

IST664I

This message occurs during session initiation request and response processing. The origin LU (*luname1*) may be either the primary logical unit or the secondary logical unit. The same applies for the destination LU (*luname2*). The real names of the session partners will be displayed if they are known (indicated by **REAL**);, otherwise the alias names will be displayed (indicated by **ALIAS**). The DLU's name will indicate **REAL** if it has been assumed. When the session setup direction cannot be determined, **PLU** and **SLU** will be displayed rather than **OLU** and **DLU**.

Note: ***NA*** is displayed in place of the network identifier portion of the LU name, or the whole LU name, if either is not known.

IST889I

The session ID *sessid* provides a unique identifier for the session. If the session ID is unknown, VTAM displays ***NA***.

Additional messages

One or more messages may follow IST889I, depending on the type of error.

1. **Processing error**

   ```
   IST264I  REQUIRED resource [luname] reason
   or
   IST1138I REQUIRED resource [luname] reason
   ```

   The combination of *resource* and *reason* can be any of the following:

   ADJSSCP TABLE
   - **UNDEFINED**

   COS NAME *cosname*
   - **UNDEFINED**

   LOGMODE NAME *logmode*
   - **UNDEFINED**

   RESOURCE *luname*
   - **UNDEFINED**

   RESOURCE *luname*
   - **NOT ACTIVE**

   RESOURCE *luname*
   - **UNSTABLE** (device-type LUs only)

   RESOURCE *luname*
   - **DISABLED**

   RESOURCE *luname*
   - **QUIESCING**

   RESOURCE *luname*
   - **BLOCKING LOGONS** (for application PLUs only)

   STORAGE
   - **NOT AVAILABLE**

   luname appears when *resource* is **RESOURCE**. *luname* is the real name of the LU or application that was in error. If the SLU is not known, VTAM displays ***NA*** for *luname*.

   – If a network-qualified name was entered on the command line and the MSGLVL option specifies V4R1 or above, VTAM displays message IST1138I and issues *luname* as a network-qualified name in the form *netid.name*

   – If the default is used or the MSGLVL option specifies BASE, VTAM issues message IST264I, and *luname* is not network-qualified.

See the *z/OS Communications Server: SNA Resource Definition Reference* for a description of the MSGLEVEL start option and the MSGLVL operand on the USSMSG macro.

See the explanation of IST264I or IST1138I for additional information.

2. **Autologon session setup failure**

```
IST890I  AUTOLOGON SESSION SETUP FAILED
```

This message indicates that an autologon attempt to a controlling PLU failed. The autologon could have originated from one of the following:
– VARY LOGON or VARY ACT with LOGON command
– VARY ACT command that applied to LUs with LOGAPPL specified
– Reallocation of the controlling PLU session

3. **Dynamic dial failure**

```
 IST1015I APPLICATION SUPPLIED parameter name = parameter value
[IST1028I parameter value]
```

See the explanation of IST1015I for additional information.

4. **Extended sense data**

```
 IST891I  netid.nodename1[.nodename2] GENERATED FAILURE NOTIFICATION
[IST892I  resourcename ORIGINATED FAILURE NOTIFICATION]
 IST893I  ORIGINAL FAILING REQUEST IS request
```

See the explanation of IST891I for additional information.

5. **Notification of available resource**

```
IST896I  AUTOLOGON WILL BE RETRIED WHEN CONTROLLING PLU IS AVAILABLE
```

See the explanation of IST896I for additional information.

6. **Adjacent SSCP table information**

```
[IST1705I SORDER = so_value FROM START OPTION]
[IST1704I SORDER = so_value FROM ADJACENT SSCP TABLE]
 IST894I  ADJSSCPS TRIED  FAILURE SENSE   ADJSSCPS TRIED  FAILURE SENSE
 IST895I     sscpname        sense        sscpname        sense
```

For IST1705I or IST1704I, *so_value* indicates the search order that was used for the session. See the explanation of IST894I for additional information.

Note: IST1704I and IST1705I are displayed only when VTAM is enabled for APPN. They are never both displayed in the same message group.

7. **Translation error**

```
IST523I  REASON = IMPROPER TRANSLATION OF {OLU|DLU} NAME
```

During an LU-LU session setup request, VTAM requested that the alias-name translation facility translate either the OLU name (*luname1*) or the DLU name (*luname2*), and the facility returned a different name with the same network identifier. If the alias and real names are in the same network, VTAM requires that the names be the same.

8. **TN3270 Resource information**

```
[IST1727I DNS NAME: dns_name]
[IST1728I dns_name_continued]
 IST1669I IPADDR..PORT ipaddr..portno
```

Messages IST1669I, IST1727I, and IST1728I will be allowed whenever the SLU of the session is known to be a TN3270-connected application, CDRSC, or LU resource.

System Action:

- If *action* is **FAILED** or **RECEIVED**, the LU-LU session setup request fails.
- If *action* is **PURGED**, the LU-LU session setup request continues its routing to other SSCPs. If there are no additional adjacent SSCPs, the LU-LU session setup fails.

Operator Response: Save the system log for problem determination.

Programmer Response:

- If *action* is **FAILED** or **RECEIVED**, review the definition for the facility where the LU translation is defined. Either change the name translation for the LU or change the network ID of the translated name to a different network identifier.
- If *action* is **PURGED**, verify that the timeout value specified for IOPURGE on either the MODIFY IOPURGE command or the IOPURGE start option is adequate. If this value is too small, it may result in premature routing failures.

  If the IOPURGE value is adequate, verify that the adjacent SSCP *adjnode* in message IST663I is active and operational.

  See *z/OS Communications Server: SNA Operation* for a description of the MODIFY IOPURGE command. See the *z/OS Communications Server: SNA Resource Definition Reference* for a description of the IOPURGE start option.

IST664I **{REAL|ALIAS} {OLU|PLU}=***luname1* **{REAL|ALIAS} {DLU|SLU}=***luname2*

Explanation: This message is part of a message group. The first message in the group is either IST663I or IST1774I. See the explanation of that message for a complete description.

IST670I **VARY** *command* **PROCESSING FOR ID =** *nodename* **COMPLETE**

Explanation: The specified VARY command processing completed for the resource *nodename*.

System Action: Processing continues.

Operator Response: None.

Programmer Response: None.

IST674I *command* **FOR ID =** *nodename* **CONTINUES — PARM:** *parameter* **IGNORED**

Explanation: VTAM issues this message when a *parameter* was entered that is not valid for the resource *nodename* specified on the *command*.

See Chapter 14, “Command and RU types in VTAM messages” on page 685 for a description of *command*.

System Action: Processing of *command* continues, but VTAM ignores *parameter*.

Operator Response: You do not need to reenter the command. Processing of *command* continues. For the next use of the command, check the valid operands for the command in *z/OS Communications Server: SNA Operation*.

Programmer Response: None.

IST675I **VR =** *vr*, **TP =** *tp*

Explanation: VTAM issues this message in response to a DISPLAY ID command for a CDRM or a PU type 4 or 5.

vr is the virtual route number.

tp is the transmission priority for the session of the node being displayed.

System Action: Processing continues.

Operator Response: None.

Programmer Response: None.

IST678I **INSUFFICIENT STORAGE TO SCHEDULE TPEND EXIT FOR** *applname*

Explanation: VTAM issues this message when storage was not available to schedule the TPEND exit of application *applname* to notify the application that VTAM was terminating.

applname is the name of a VTAM subtask or a user application.

System Action: Processing continues without VTAM scheduling the TPEND exit for the indicated application. For HALT and HALT QUICK, VTAM will not be able to terminate until *applname* has closed its ACB. The scheduling of the

TPEND exit for *applname* will be retried by VTAM at some later time.

Operator Response: Save the system log for problem determination.

Programmer Response: Check VTAM storage allocation as specified in the start options and as modified by the MODIFY CSALIMIT command.

Make adjustments as necessary to your CSA start options by using the MODIFY VTAMOPTS command.

- See the *z/OS Communications Server: SNA Diagnosis Vol 2, FFST Dumps and the VIT* for information about analyzing dumps and about analyzing storage using the VIT analysis tool, if external trace is active.
- See the *z/OS Communications Server: SNA Operation* for information about the DISPLAY BFRUSE Command, and the MODIFY VTAMOPTS Command.

IST679A PLEASE DIAL LINE = *linename*, **NUMBER =** *phonenum*

Explanation: Manual dial-out is required. VTAM prompts the network operator to dial *phonenum* on *linename*.

System Action: VTAM has caused the NCP to begin monitoring for a connection to complete on the line. The application program's request to connect to the device is kept waiting until the connection is completed.

Operator Response: You must either successfully establish the requested connection or enter the VARY INOP command to terminate the dial-out request.

Programmer Response: None.

IST680I CONNECTION REQUEST DENIED – ID = *nodename text*

Explanation: VTAM issues this message when a connection request for resource *nodename* has been rejected. This message is issued as both a single line message and as part of message groups.

- If *nodename* is a local SNA physical unit, the following message group is displayed.

```
 IST680I     CONNECTION REQUEST DENIED - ID = nodename text
[IST1394I   CPNAME = cpname  STATION ID = stationid]
[IST352I    LOCAL SNA MAJOR NODE = majornode ]
 IST314I     END
```

- If nodename is a DLUR served physical unit, the following message group is displayed.

```
IST680I    CONNECTION REQUEST DENIED - ID = nodename text
IST1354I   DLUR NAME = dlurname  MAJNODE = majnode
IST1394I   CPNAME = cpname  STATION ID = stationid
IST314I    END
```

- For all other types of nodes, the following message group is displayed.

```
 IST680I     CONNECTION REQUEST DENIED - ID = nodename text
[IST1394I   CPNAME = cpname  STATION ID = stationid]
[IST081I    LINE NAME = linename, LINE GROUP = groupname, MAJNOD = nodename ]
[IST1544I   DIAL OUT PURGE IN PROGRESS - ID = nodename text]
 IST314I     END
```

IST081I

linename is the line to which *nodename* is connected.

groupname is the line group to which the line *linename* belongs.

nodename is the major node with which the line is associated.

IST352I

majornode is the local SNA major node (local cluster controller).

IST680I

text can be one of the following:

CALL SECURITY ERROR

A dial-in or dial-out request was rejected because the required information for call security verification was missing or not valid.

IST680I

DIAL OUT IN PROGRESS

The dial-out for the switched physical unit *nodename* is already in progress over another line. For a manual dial, see message IST679A. For an auto dial, the dial-in will fail.

INVALID NETWORK NAME

This error can occur for one of the following reasons:

– *nodename* is not a valid name. Either the CPNAME passed in the REQCONT/REQACTPU RU could not be found (matched to a switched PU definition), or the network ID or CPNAME passed in the REQCONT/REQACTPU RU is not valid. This is the most frequent reason for the error.

– *nodename* is attempting to establish a connection with itself. This can occur in response to an operator takeover request.

LINK NOT IN EAM

A dial-in request was not honored for the switched physical unit *nodename* because the link was not in enable answer mode (EAM).

MAXLU INADEQUATE

The dial-in request was not honored because the link cannot support the number of logical units required by the switched physical unit *nodename* that dialed in.

NETID MISMATCH

NETID found in REQCONT/REQACTPU RU does not match the NETID of the host.

NO USABLE PATH FOUND

Call ID verification was indicated on a PATH definition statement for *nodename* and a usable PATH definition could not be found.

PU GEN NOT SUPPORTED

This error can occur for one of the following reasons:

– The host could not identify the switched PU for one of the following reasons:

- The PU is not defined in a switched major node.
- The switched major node in which the PU is defined is not active.
- The PU is not able to be dynamically defined for the following reasons:
  - Non-genned terminal support is not available because ASDP=YES is not specified on the PU definition statement in the switched major node.
  - DYNPU=YES is not specified on the GROUP definition statement in a major node such as NCP or XCA.
- The network-qualified name of the node that the PU represents, as specified in the XID3 received from the adjacent node, does not match the name defined in the switched major node on the NETID and CPNAME operands on the PU definition statement.
- The *idblk* and *idnum*, as specified in the XID3 received from the adjacent node, do not match the *idblk* and *idnum* defined in the switched major node on the IDBLK and IDNUM operands on the PU definition statement.

PUTYPE MISMATCH

PUTYPE found in REQCONT/REQACTPU RU does not match the PUTYPE in the switched PU definition.

REQCONT RU NOT VALID

The station ID (*nodename*) passed in the REQCONT RU could not be found (that is, matched to a switched PU definition). This indicates a hardware or software problem in the switched physical unit *nodename* attempting the connection.

T2.1 NOT SUPPORTED

A connection request for a PU type 2.1 node, *nodename*, with independent LUs was received from an NCP that does not provide the required level of support.

IST1354I

dlurname is the network-qualified CP name (in the form netid.name) of the dependent LU requestor (DLUR) associated with the DLUR served physical unit *nodename* in message IST680I.

majnode is the name of the switched major node for the DLUR served physical unit *nodename* in message IST680I.

IST1394I

cpname is the network-qualified name of the control point (CP) that was passed in the XID from the node attempting the connection. VTAM displays *cpname* in the form *netid.name*. ***NA*** is displayed if no CP name is provided.

stationid is the station identifier expressed in hexadecimal. For more information on station identifier formats, see the descriptions of the IDBLK and IDNUM operands in the *z/OS Communications Server: SNA Resource Definition Reference*.

IST1544I

nodename is the physical unit (PU) that dialed out on the associated line.

text will be the following:

CALL COLLISION
A dial-in and a dial-out to use the same line were attempted at the same time and both requests were rejected.

There are two possible causes for the problem:

- A physical unit (PU) did a dial-out, but the request contact information (*cpname* or *stationid*) received in contact RU (REQCONT) matches to a different PU defined in VTAM.
- Two different physical units (PUs), one performing dial-out and the other performing dial-in over the same line causing a race condition.

In both cases, the PU that attempted to dial out is displayed.

System Action: Processing continues. If the physical unit is offline, the session establishment remains pending. Otherwise, the connection request and any associated session establishment attempts fail.

For CALL COLLISION in IST1544I, the dial-in is rejected and the dial-out is purged.

Operator Response: For IST1544I

CALL COLLISION
Save the system log for problem determination.

For IST680I

CALL SECURITY ERROR
Save the system log for problem determination.

DIAL OUT IN PROGRESS
Attempt to dial in on another line.

INVALID NETWORK NAME
Save the system log for problem determination.

LINK NOT IN EAM
If dial-in requests are to be honored on link *link*, enable answer mode by using the VARY ANS=ON,ID=*link* command.

MAXLU INADEQUATE
Save the system log for problem determination.

NETID MISMATCH
Save the system log for problem determination.

NO USABLE PATH FOUND
If dial-in or dial-out requests are to be honored for the node, enable the PATH definitions for *nodename* by using the VARY PATH=USE,ID=*nodename*, PID=*pathid* command.

PU GEN NOT SUPPORTED
Try activating the switched major node containing the PU *nodename*. If problems persist, save the system log for problem determination.

PUTYPE MISMATCH
Save the system log for problem determination.

IST680I

REQCONT RU NOT VALID
Save the system log for problem determination.

T2.1 NOT SUPPORTED
Save the system log for problem determination.

Programmer Response: For IST1544I

CALL COLLISION
There are two possible causes for the problem.

A physical unit (PU) did a dial-out, but the information (*cpname* or *stationid*) received in the request contact RU (REQCONT) matches to a different PU defined in VTAM.

Two different physical units (PUs), one performing dial-out and the other performing dial-in over the same line causing a race condition.

For IST680I

CALL SECURITY ERROR
Verify that all nodes involved in the dial process are of a level that supports call security verification. Refer to the PRTCT operand on the PU definition statement in the switched major node definition.

DIAL OUT IN PROGRESS
None.

INVALID NETWORK NAME

- If *nodename* is not a valid name, check for a CPNAME mismatch between the switched major nodeor mocel major node and the NCP major node definitions. Verify that the network ID passed in the REQCONT/REQACTPU RU matches the network ID specified in the PU definition statement. Line information or I/O trace information or both might be necessary to determine the cause of the problem.
- If this error is due to an operator takeover request, APPN or LEN connectivity is not available until the failing host regains control or another host takes control. See the *z/OS Communications Server: SNA Network Implementation Guide* for more information.
- If this error is due to a name conflict, correct the duplicate names.

LINK NOT IN EAM
Put the link in enable answer mode (EAM).

MAXLU INADEQUATE
Check for a MAXLU mismatch in the switched major node and NCP major node definitions. Either update the switched major node to match the NCP major node or instruct the remote user of the PU not to dial in over that link.

NETID MISMATCH
NETID should be the same as the host. If it is not, then the NETIDin the REQCONT/REQACTPU RU is incorrect. If *cpname* is not network-qualified, then NETID will default to the host NETID. See the *z/OS Communications Server: SNA Resource Definition Reference* for information about XNETALS.

See the product documentation for the device for information on coding cpname and NETID if they are not correct in the REQCONT/REQACTPU RU.

NO USABLE PATH FOUND
Check the PATH definition statements in the switched major node containing *nodename*.

PU GEN NOT SUPPORTED
Check the definition statements for the switched PU and revise as needed. Deactivate and reactivate the switched major node to use the revised definitions.

PUTYPE MISMATCH
PUTYPE as indicated in the XID received on the REQCONT/REQACTPU RU should match PUTYPE as defined on the switched PU. See *z/OS Communications Server: SNA Resource Definition Reference* for information about PUTYPE.

See the product documentation for the device for information on PUTYPE if it is not indicated correctly in the XID received on REQCONT/REQACTPU RU.

REQCONT RU NOT VALID
Check for an IDBLK or IDNUM mismatch between the device and the switched major node.

T2.1 NOT SUPPORTED
Check the PATH and LU definition statements in the switched major node containing *nodename*.

IST683I CONNECTION REQUEST DENIED, ID = *nodename*

Explanation: This message is the first in a subgroup of messages that VTAM issues when the connection for channel-attached physical unit *nodename* failed. A complete description of the message subgroup follows.

```
IST683I  CONNECTION REQUEST DENIED, ID = nodename
IST684I  I/O ERR, CSW = channel_status_word, SENSE = code
```

channel_status_word (also called *subchannel_status_word*) provides information about the device and channel (or subchannel) status.

code is the sense code and provides information about the cause of the error. See the appropriate hardware manual for the value of *code*.

System Action: Processing continues.

Operator Response: Save the system log for problem determination.

Programmer Response: Use the information in the two messages to determine appropriate error recovery action. See the appropriate hardware manual for the value of *code*.

If you cannot identify an I/O error or if **SENSE = 0200** or **8200** in IST684I, check the following:

- Ensure that the buffer size (IOBUF) is compatible between the device and VTAM. This can be determined by referencing the device installation guidelines.

  Note: Some devices require an even numbered buffer size.
- Ensure that the PU type defined to VTAM (XID=YES|NO) matches the real PU type.
- Ensure that you have specified an appropriate value for MAXBFRU on the PU definition of *nodename*.
- Ensure that the product of MAXBFRU and the buffer size (IOBUF) is equal to or greater than the hardware's maximum send size. Reference your hardware documentation for additional information about maximum send size.

IST684I I/O ERR, CSW = *channel_status_word*, **SENSE =** *code*

Explanation: This message is part of a message subgroup. The first message in the subgroup is IST683I. See the explanation of that message for a complete description of the subgroup.

IST688I VARY FAILED FOR ID = *cdrmname* **— INSUFFICIENT STORAGE**

Explanation: While VTAM was processing a VARY ACT command for an external CDRM, insufficient storage was available to process a request for node *cdrmname*.

System Action: The VARY ACT command for *cdrmname* fails.

Operator Response: Wait a short time and reenter the command. If VTAM continues to issue this message, enter the DISPLAY BFRUSE command. Enter the DISPLAY STORUSE command to display storage usage for storage pools. Save the system log and dump for problem determination.

Programmer Response: Verify that the operator entered the buffer pool or CSA start options as specified in the start procedures.

Increase storage as required. For insufficient storage errors, you might want to redefine your buffer pool or CSA start options. If the start option cannot be modified using the MODIFY VTAMOPTS command, you must modify the VTAM start options file (ATCSTRxx) and restart VTAM to use the start option.

- See the *z/OS Communications Server: SNA Migration* to determine the storage requirements for VTAM.
- See the *z/OS Communications Server: SNA Resource Definition Reference* for a description of VTAM start options.
- See the *z/OS Communications Server: SNA Operation* for information about the DISPLAY BFRUSE Command, the DISPLAY STORUSE Command, and the MODIFY VTAMOPTS Command.

- See the *z/OS Communications Server: SNA Network Implementation Guide* for an explanation and description of buffer pools and for general information on buffer pool specification and allocation.
- See the *z/OS Communications Server: SNA Diagnosis Vol 2, FFST Dumps and the VIT* for information about analyzing dumps and about analyzing storage using the VIT analysis tool, if external trace is active.

IST690I CONNECTION REQUEST DENIED — INVALID STATION ID = *stationid*

Explanation: VTAM issues this message when a switched connection between VTAM and a physical unit was unsuccessful because the station identifier *stationid* did not resolve to a node name in an active switched major node. A description of the message group follows.

```
 IST690I  CONNECTION REQUEST DENIED - INVALID STATION ID = stationid
[IST1544I   DIAL OUT PURGE IN PROGRESS - ID = nodename text]
 IST081I  LINE NAME = linename, LINE GROUP = groupname, MAJNOD = nodename
 IST314I  END
```

IST081I

linename is the line to which *nodename* is connected.

groupname is the line group to which the line *linename* belongs.

nodename is the major node with which the line is associated.

IST690I

stationid is the station identifier expressed in hexadecimal. For more information on station identifier formats, see the descriptions of the IDBLK and IDNUM operands in the *z/OS Communications Server: SNA Resource Definition Reference*.

IST1544I

nodename is the physical unit (PU) that dialed out on the associated line.

text can be one of the following:

CALL COLLISION
A dial-in and a dial-out to use the same line were attempted at the same time and both requests were rejected.

There are two possible causes for the problem:

– A physical unit (PU) did a dial-out, but the request contact information (*cpname* or *stationid*) received in contact RU (REQCONT) matches to a different PU defined in VTAM.
– Two different physical units (PUs), one performing dial-out and the other performing dial-in over the same line causing a race condition.

In both cases, the PU that attempted to dial out is displayed.

System Action: The connection to the physical unit is broken.

For CALL COLLISION in IST1544I, the dial-in is rejected and the dial-out is purged.

Operator Response: Save the system log for problem determination.

For IST1544I

CALL COLLISION
Save the system log for problem determination.

Programmer Response: Possible reasons for this problem are:

- The switched major node that contains the PU definitions for this physical unit is not active. The physical unit could be attached to a Token Ring.

  Activate the switched major node that contains the definitions for this physical unit.
- A remote terminal operator initialized a physical unit with the wrong ID.

  Have the remote operator re-initialize the physical unit with the correct station identifier.
- The VTAM definition statements are incorrect.

  Correct the VTAM definition statements before your operator tries to redial by taking the following actions:

1. Enter a VARY INACT command for the switched major node.
2. Modify and file new VTAM definition statements.
3. Reactivate the switched major node.
4. Redial.

- Dynamic definition of the physical unit fails for one of the following reasons:
  - The XID exit has not been activated or the XID exit has not been defined.

    Verify that the XID exit is in the VTAMLIB and that the exit has been activated. See *z/OS Communications Server: SNA Customization* for more information on the XID exit.
  - The XID exit is active, but the MODEL major node is not active, not valid, or contains an error.

    In this case, message IST1016I precedes this message and provides more specific information about the cause of the failure.
- The switched PU is not in a valid state. This can occur during recovery processing when a PU that is being deactivated by the host through one boundary function, such as NCP, dials in through another boundary function. The PU deactivation can occur in response to an operator command or internal INOP processing. If the current resource state of the PU in VTAM is not CONCT (connectable), the dial request will fail.

  Since this situation occurs as a result of internal recovery processing, no operator or programmer actions are needed. When the reactivation of a PU is complete and the state becomes CONCT, the dial request will be successfully completed.

For IST1544I

CALL COLLISION

There are two possible causes for the problem.

- A physical unit (PU) did a dial-out, but the information (*cpname* or *stationid*) received in the request contact RU (REQCONT) matches to a different PU defined in VTAM.
- Two different physical units (PUs), one performing dial-out and the other performing dial-in over the same line causing a race condition.

IST693I UNABLE TO DISCONNECT ID = *nodename*

Explanation: VTAM issues this message when a session termination request for channel-attached physical unit *nodename* failed because of insufficient storage or an I/O error.

System Action: Processing continues.

Operator Response: Message IOS000I may be issued by MVS prior to this message and can provide additional information about the reason for the error.

Enter a VARY INACT,TYPE=IMMED command for *nodename* so the system can release the resources allocated to *nodename*.

- To check for a storage problem, take the following actions:

  Enter the DISPLAY BFRUSE command to display information about the common service area (CSA). Total VTAM private storage information is also displayed in message IST981I. If this is a storage problem, it is usually related to private storage. Enter the DISPLAY STORUSE command to display storage usage for storage pools.

  Save the system log and request a dump for problem determination.
- To check for an I/O error, take the following actions:

  Save the system log for problem determination.

  Run your operating system service aid program to determine if MDR/OBR information has been recorded. See the *EREP User's Guide and Reference* for more information on using EREP.

  If you use a network management application such as NetView, check to see if an alert was recorded for this problem.

Programmer Response:

- For a storage problem, increase storage as required. See the *z/OS Communications Server: SNA Diagnosis Vol 2, FFST Dumps and the VIT* for information about analyzing dumps and about analyzing storage using the VIT analysis tool, if external trace is active.
- For an I/O error, if you cannot determine the cause of the problem from the output provided or need additional assistance, contact the IBM hardware support center.

If available, provide the MDR/OBR information from your operating system service aid program or the alert information recorded by your network management application.

IST700I INVALID *type* – SKIPPING TO NEXT NETWORK STMT OR EOF

Explanation: This message is the first of a group of messages. A full description of the message group follows:

```
IST700I  INVALID type – SKIPPING TO NEXT NETWORK STMT OR EOF
IST701I  CONFIG configname LABEL = labelname STMT TYPE = statementname
```

VTAM encountered an error in the adjacent SSCP, ADJCLUST or COSMAP table definition *configname*. One of the following is not valid:
- A definition statement
- A label (such as a numeric first character)
- A value on the NETID operand on a NETWORK definition statement

IST700I

type is **STMT**, **LABEL**, or **NETID**, indicating the location of the error.

If the NETID is not valid, the value coded on the NETID operand on a NETWORK definition statement in an adjacent SSCP, ADJCLUST, or COSMAP table does not follow the standards for a name. The value must be 8 characters or fewer, the first character must be alphabetic, and the rest of the characters must be alphanumeric.

IST701I

configname identifies the SSCP, ADJCLUST or COSMAP table definition.

labelname is the label on the statement.

statementname is the type of definition statement and is filled in only if the label is valid.

System Action: All statements in the adjacent SSCP, ADJCLUST, or COSMAP table definition following the statement in error are ignored until a NETWORK statement or end of file (EOF) is encountered. If a NETWORK statement is encountered, normal processing resumes for that NETWORK statement and subsequent definition statements.

If the table is an adjacent SSCP table, and the error occurred after one or more valid ADJCDRM definition statements for the NETWORK statement (or the set of NETWORK statements) preceding the statement with label *labelname*, those ADJCDRM statements are processed. If no valid ADJCDRM definition is encountered for the NETWORK statement (or the set of NETWORK statements) preceding the statement with label *labelname*, all definition statements related to the NETWORK statements are ignored.

If the table is an ADJCLUST table, and the error occurred after one or more valid NEXTCP definition statements for the NETWORK statement (or the set of NETWORK statements) preceding the statement with label *labelname*, those NEXTCP statements are processed. If no valid NEXTCP definition is encountered for the NETWORK statement (or the set of NETWORK statements) preceding the statement with label *labelname*, all definition statements related to the NETWORK statements are ignored.

If the table is a COSMAP table, and the error occurred after one or more valid MAPTOCOS definition statements for the NETWORK statement (or the set of NETWORK statements) preceding the statement with label *labelname*, those MAPTOCOS statements are processed. If no valid MAPTOCOS definition is encountered for the NETWORK statement (or the set of NETWORK statements) preceding the statement with label *labelname*, all definition statements related to the NETWORK statements are ignored.

Operator Response: Save the system log for problem determination.

Programmer Response: Enter a DISPLAY TABLE command to determine the error. See the *z/OS Communications Server: SNA Resource Definition Reference* for a description of VTAM table definition statements.

After you correct the error, reactivate the major node in order to use the revised table definition.

IST701I CONFIG *configname* LABEL = *labelname* STMT TYPE = *statementname*

Explanation: VTAM issues this message as part of several different message groups. See the explanation of the first message in the group for a complete description.

IST702I CONFIG *configname* **– UNEXPECTED** *stmt_type*

Explanation: VTAM encountered an unexpected statement or EOF while processing the adjacent SSCP table definition or dynamic path update set.

configname identifies the adjacent SSCP table definition or dynamic path update set.

stmt_type identifies the unexpected statement. The values can be one of the following:

- **CDRM STMT**
- **NETWORK STMT**[*labelname*], where *labelname* is the name of the label for a NETWORK statement.
- **EOF**

One of the following conditions occurred:

- After a valid CDRM definition statement was processed, a NETWORK statement with label *labelname* or end of file (EOF) was encountered before a valid ADJCDRM statement.
- After a valid NETWORK statement was processed, end of file (EOF) occurred before a valid ADJCDRM statement.
- After a valid ADJLIST statement was processed, a CDRM or NETWORK statement or EOF occurred before a valid ADJCDRM statement.

In the first two conditions, an ADJCDRM definition statement was expected—not necessarily as the next statement, but before EOF or a NETWORK statement. Instead, either EOF or a NETWORK statement defining a destination network for a new set of adjacent SSCP tables was encountered. After a valid VPATH or NCPPATH statement was processed, EOF occurred before a valid PATH statement.

In the third condition, an ADJCDRM definition statement was expected immediately following an ADJLIST statement. Instead, a CDRM or NETWORK statement or EOF was encountered.

System Action: For adjacent SSCP table definition, further processing of the NETWORK definition statements and CDRM definition statements not accompanied by an ADJCDRM statement is halted, since the definition statements do not define a valid adjacent SSCP table.

For dynamic path update, the last VPATH or NCPPATH statement is not processed, since the definition statements do not define a valid dynamic path update set.

Operator Response: Save the system log and network logs for problem determination.

Programmer Response: Review the definition library to make sure all requirements for VTAM are correct for your system.

For adjacent SSCP table definition, either insert one or more valid ADJCDRM definition statements before (not necessarily immediately preceding) the unexpected NETWORK statement or EOF, or delete the extra NETWORK and CDRM statements that do not define the destination networks or destination SSCPs in the adjacent SSCP table definitions.

For dynamic path update, insert one or more valid PATH definition statements before EOF or delete the extra VPATH or NCPPATH statement that does not define a complete dynamic path update set.

For ADJLIST definition, do one of the following:

- Insert one or more valid ADJCDRM definition statements immediately preceding the unexpected CDRM or NETWORK statement, or EOF.
- Delete the extra CDRM and NETWORK statements.
- If they are out of order, move the unexpected statements to the proper position.

IST703I CONFIG *configname* **ADJSSCP DEFINITIONS IGNORED – NO ADJCDRM STMT**

Explanation: No valid CDRM, ADJCDRM, or ADJLIST definition statements were found in the adjacent SSCP table definitions *configname*.

System Action: Processing of the adjacent SSCP table definitions is halted.

Operator Response: Save the system log for problem determination.

Programmer Response: Include one or more valid ADJCDRM definition statements in the adjacent SSCP table definitions.

IST706I ADJSSCP TABLE FOR *configname* **IGNORED — INSUFFICIENT STORAGE**

Explanation: This message is the first in two message subgroups. A full description of the two message groups follows.

- If an adjacent SSCP table is activated with entries identified with CDRM or NETID definition statements, the following message group is displayed.

```
IST706I  ADJSSCP TABLE FOR configname IGNORED — INSUFFICIENT STORAGE
IST708I  {[NETID = netid] [NETWORK = macroname] [CDRM = sscpname|DEFAULT TABLE]}|
         DEFAULT TABLE FOR ALL NETWORKS
```

- If an adjacent SSCP table is activated with entries identified with an ADJLIST definition statement, the following message group is displayed.

```
IST706I  ADJSSCP TABLE FOR configname IGNORED — INSUFFICIENT STORAGE
IST1333I ADJLIST = listname
```

The adjacent SSCP table for the indicated network and the indicated CDRM could not be built during the processing of the ADJSSCP definition, *configname*, because of a lack of storage.

IST706I

configname is the ADJSSCP definition.

IST708I

netid is the name of the network of the ADJSSCP table that is being defined. This is specified in the NETID operand on the relevant NETWORK definition statement. If the NETID operand or the NETWORK statement was not coded, the NETID defaults to this host's network.

macroname is the label coded on the NETWORK definition statement. If it does not appear, either a label was not provided on the NETWORK definition statement, or a NETWORK definition statement was not coded at all. In this case, the adjacent SSCP table defaults to the network of this host.

sscpname is the label coded on the CDRM definition statement. The intended adjacent SSCP table was for the adjacent SSCPs that are used to get to CDRM *sscpname* in network *netid*. If *sscpname* does not appear, the ADJSSCP table being defined is the default table for the entire network identified by NETID, and **DEFAULT TABLE** appears instead of the **CDRM=***sscpname*.

If **CDRM=********** appears, there was not enough storage to build adjacent SSCP tables for any of the CDRMs listed following the indicated NETWORK statement.

VTAM issues **DEFAULT TABLE FOR ALL NETWORKS** when the table being activated has a default adjacent SSCP list for all networks.

IST1333I

listname is the name of an adjacent SSCP table as defined by an ADJLIST definition statement.

If an adjacent SSCP table was not specified for the CDRSC, then ***NA*** is displayed.

See the descriptions of the ADJLIST definition statement in the *z/OS Communications Server: SNA Resource Definition Reference* for more information on adjacent SSCP tables.

System Action: No further attempt is made to build adjacent SSCP tables for the indicated network.

Operator Response: When VTAM activity has decreased, try the operation again. If problems persist, enter the DISPLAY STORUSE command. Save the system log and request a dump for problem determination.

Programmer Response:

Increase storage as required.

- See *z/OS Communications Server: SNA Operation* for more information on the DISPLAY STORUSE command.
- See the *z/OS Communications Server: SNA Diagnosis Vol 2, FFST Dumps and the VIT* for information about analyzing dumps and about analyzing storage using the VIT analysis tool, if external trace is active.

IST707I ADJSSCP TABLE BEING MODIFIED BY ACTIVATION OF *configname*

Explanation: This message is the first in two message subgroups. A full description of the two message groups follows.

- If an adjacent SSCP table is activated with entries identified with CDRM or NETID definition statements, the following message group is displayed.

```
IST707I  ADJSSCP TABLE BEING MODIFIED BY ACTIVATION OF configname
IST708I  {[NETID = netid] [NETWORK = macrolabel] [CDRM = sscpname|
         DEFAULT TABLE]}|DEFAULT TABLE FOR ALL NETWORKS
```

- If an adjacent SSCP table is activated with entries identified with an ADJLIST definition statement, the following message group is displayed.

```
IST707I  ADJSSCP TABLE BEING MODIFIED BY ACTIVATION OF configname
IST1333I ADJLIST = listname
```

IST707I

An adjacent SSCP table has been modified.

configname is the ADJSSCP definition that contains an adjacent SSCP table entry defining the same CDRM or NETID or both that were modified. This entry is added to the table, modifying the old table.

IST708I

netid is the name of the network of the ADJSSCP table that is being defined. This is specified in the NETID operand on the relevant NETWORK definition statement. If NETID or the NETWORK statement was not coded, NETID defaults to this host's network.

macrolabel is the label coded on the NETWORK definition statement. If it does not appear, either a label was not provided on the NETWORK definition statement, or a NETWORK definition statement was not coded at all. In this case, the adjacent SSCP table defaults to the network of this host.

sscpname is the label coded on the CDRM statement. If it does not appear, the ADJSSCP table being defined is the default table for the entire network identified by NETID, and **DEFAULT TABLE** appears instead of the **CDRM=***sscpname*.

DEFAULT TABLE FOR ALL NETWORKS is issued when the table being activated has a default adjacent SSCP list for all networks.

IST1333I

listname is the name of an adjacent SSCP table as defined by an ADJLIST definition statement.

If an adjacent SSCP table was not specified for the CDRSC, then *****NA***** is displayed.

See the descriptions of the ADJLIST definition statement in the *z/OS Communications Server: SNA Resource Definition Reference* for more information on adjacent SSCP tables.

System Action: The new adjacent SSCP table replaces the old adjacent SSCP table.

Operator Response: None.

Programmer Response: None.

IST708I {[NETID = *netid***] [NETWORK =** *macrolabel***] [CDRM =** *sscpname***|DEFAULT TABLE]}| DEFAULT TABLE FOR ALL NETWORKS**

Explanation: This message is part of a message group. The first message is IST706I, IST707I, or IST831I. See the explanations of those messages for a full description.

IST709I CONFIG *configname* **FAILED —** *reason*

Explanation: The activation of NCP major node *configname* failed during network definition. *reason* will be one of the following:

NO VALID BUILD OR NETWORK MACRO

The NCP major node definition *configname* does not contain either a BUILD or a NETWORK definition statement with the appropriate SUBAREA or NETID values or both specified for this host.

IST710I

CONFLICTING NEWNAME SPECIFIED ON BUILD
The LOADMOD=*load module name* specified on the VARY ACT command does not match the value coded for the NEWNAME keyword on the BUILD definition statement.

CONFLICTING PUNAME SPECIFIED ON BUILD
The ID=*puname* specified on the VARY ACT command must match the value coded for the PUNAME keyword on the BUILD definition statement.

System Action: Activation of the NCP major node fails.

Operator Response: When *reason* is **NO VALID BUILD OR NETWORK MACRO**, save the system log for problem determination.

When *reason* is **CONFLICTING NEWNAME SPECIFIED ON BUILD**, reenter the VARY ACT command with the LOADMOD operand specifying the value coded for NEWNAME on the BUILD definition statement.

When *reason* is **CONFLICTING PUNAME SPECIFIED ON BUILD**, reenter the VARY ACT command with the ID operand specifying the value coded for PUNAME on the BUILD definition statement.

Programmer Response: When *reason* is **NO VALID BUILD OR NETWORK MACRO**, include a valid BUILD or NETWORK definition statement with the appropriate SUBAREA and NETID values specified for this host.

See the *z/OS Communications Server: SNA Resource Definition Reference* for a description of the VTAM definition statements.

IST710I CONFIG = *configname* **NETWORK =** *netid text*

Explanation: Either the COS table name (defined by the COSTAB operand) or the maximum subarea value (defined by the MAXSUBA operand) on the BUILD or NETWORK definition statement could not be defined to VTAM.

configname specifies the name of the NCP definition; *netid* specifies the network identifier coded on the NETID operand on the BUILD or NETWORK definition statement that has encountered an error.

text indicates the specific reason for the failure of either operand, as described as follows:

COSTAB CONFLICT
The COS table for the *netid* and for this NCP has already been defined by another BUILD or NETWORK definition statement in this or another NCP definition.

COSTAB NOT LOADED
A table-load error occurred or the COS table could not be found.

COSTAB OVERFLOW
VTAM has exceeded the ability to record NCP sharing of the COS table identified by the COSTAB operand.

MAXSUBA CONFLICT
The maximum subarea value (MAXSUBA) for the *netid* has already been defined by another BUILD or NETWORK definition statement in this or another NCP definition.

NO STORAGE FOR COSTAB
The COS table name cannot be saved because of the lack of available storage.

NO STORAGE FOR MAXSUBA
The maximum subarea value (MAXSUBA) cannot be saved because of the lack of available storage.

System Action:

COSTAB CONFLICT
The COS table name is ignored and processing of the NCP definition continues. The original COS table name for the NETID defined in this NCP definition is used.

COSTAB NOT LOADED
The COS table name is ignored and processing of the NCP definition continues. Following this activation, all cross-network sessions destined to the network identified by the NETID will fail except for SSCP-SSCP sessions and for LU-LU sessions that use the default blank COS entry.

COSTAB OVERFLOW
The COS table name is ignored and processing of the NCP definition continues. Following this activation, all cross-network sessions destined to the network identified by the NETID will fail except for SSCP-SSCP sessions

and for LU-LU sessions which use the default blank COS entry. Even though the class-of-service table is defined for other active NCPs, it still cannot be used for this NCP definition, since its usage cannot be recorded to VTAM.

MAXSUBA CONFLICT
The maximum subarea value is ignored and processing of the NCP definition continues. A different value has already been defined successfully to this host, and cannot be changed or redefined for the network identified by the coded NETID unless all sessions which depend on this maximum subarea are terminated.

NO STORAGE FOR COSTAB
The COS table name is ignored and processing of the NCP definition continues. Following this activation, all cross-network sessions destined to the network identified by the NETID will fail except for SSCP-SSCP sessions and for LU-LU sessions which use the default blank COS entry.

NO STORAGE FOR MAXSUBA
The maximum subarea value is ignored and processing of the NCP definition continues. If this host resides in the gateway NCP's native network, and will own links or link stations in the network identified by the NETID operand, it will be impossible to activate those links or link stations without knowledge of that network's maximum subarea value. However, if the definition of another NCP has successfully defined the maximum subarea for the network, such link and link station activations will be possible, as long as that other NCP remains defined (that is, not deactivated).

Operator Response: Save the system log for problem determination.

If *text* is **NO STORAGE FOR COSTAB** or **NO STORAGE FOR MAXSUBA**, try this activation at a later time when storage becomes available. If problems persist, enter a DISPLAY BFRUSE command or a DISPLAY STORUSE command. Save the system log and request a dump for problem determination.

If *text* is **COSTAB NOT LOADED**, **COSTAB CONFLICT**, or **COSTAB OVERFLOW**, enter a DISPLAY COS,ORIGIN=*configname*,NETID=* command, and save the system log for problem determination.

Programmer Response:

COSTAB CONFLICT
Review the output from the DISPLAY COS command. Inspect all the BUILD and NETWORK definition statements preceding the definition statement specified for the indicated network to identify the COSTAB name coded for the same NETID. Code only a single COSTAB name for any one network within this NCP definition. Use the MODIFY TABLE command to correct problems.

COSTAB NOT LOADED
Review the output from the DISPLAY COS command. Check to see if the class-of-service table identified by the COSTAB operand on the BUILD or NETWORK definition statement for the indicated network exists in the NCP definition. Use the MODIFY TABLE command to correct problems.

COSTAB OVERFLOW
Review the output from the DISPLAY COS command. Restrict the usage of the COSTAB name for each network and NCP to less than 256. If many NCPs need to be active simultaneously, use different COSTAB names, each defining COSTABs for many other networks. Use the MODIFY TABLE command to correct problems.

MAXSUBA CONFLICT
Check to see if the maximum subarea value specified on the MAXSUBA keyword for the BUILD or NETWORK definition statement for the indicated NETID start option is valid. This value must also be identical to the maximum subarea values on all other BUILD or NETWORK definition statements in this or another NCP definition that have ever been activated.

NO STORAGE FOR COSTAB
Increase storage as required. Also, have the operator cancel nonessential jobs or deactivate an unused part of the network.

NO STORAGE FOR MAXSUBA
Increase storage as required. Also, have the operator cancel nonessential jobs or deactivate an unused part of the network.

IST712I CONFIG *configname* **GWPATH** *statement* **IGNORED — MISSING OPERANDS**

Explanation: VTAM ignores the GWPATH definition statement *statement* in the CDRM major node definition *configname* because one or more required operands are missing.

System Action: VTAM ignores the GWPATH definition statement *statement* in the CDRM major node *configname*.

Operator Response: Save the system log for problem determination.

Programmer Response: Examine the GWPATH definition statement. Verify that the correct combination of operands is coded.

See the *z/OS Communications Server: SNA Resource Definition Reference* for a description of the GWPATH definition statement.

IST713I CONFIG *configname* **GWPATH** *statement* **—** *opname* **OPERAND IGNORED**

Explanation: VTAM ignores the operand *opname* on the GWPATH definition statement *statement* in the CDRM major node *configname* because its associated operand is missing.

If the ELEMENT operand was coded, but the SUBAREA operand was not, then VTAM ignores ELEMENT.

If the ADJNETEL operand was coded, but the ADJNETSA operand was not, then VTAM ignores ADJNETEL.

System Action: VTAM ignores the operand *opname* on the GWPATH definition statement.

Operator Response: Save the system log for problem determination.

Programmer Response: Either remove the operand that is being ignored (that is, the ELEMENT or ADJNETEL operand), or add the operand that is missing (that is, the SUBAREA or ADJNETSA operand).

IST714I CONFIG *configname* **GWPATH** *statement* **IGNORED — INVALID STMT**

Explanation: VTAM ignores the GWPATH definition statement *statement* in the CDRM major node definition *configname*.

VTAM issues this message when a GWPATH definition statement follows a CDRM statement, and the CDRM statement defines a resource in this network. This condition can occur in one of the following ways:

- No NETWORK definition statement preceded the CDRM statement; this implies that the CDRM statement is defined for a resource in the host's network.
- The NETID operand on the preceding NETWORK definition statement indicated that the NETWORK statement was for this host's network.
- The GWPATH statement cannot be coded in a CDRM major node if the host is not gateway capable, that is, is not started with GWSSCP=YES.
- The class of service (COS) name as known in the adjacent network is invalid. The keyword value may be too large, the value may contain invalid characters, or the value may not start with an alphabetic character (A–Z). This implies that an invalid COS name may be used for the SSCP-SSCP session.

System Action: VTAM ignores the GWPATH definition statement *statement*.

Operator Response: Save the system log for problem determination.

Programmer Response: Examine the CDRM major node to see if one of the following conditions apply:

- A GWPATH statement could be coded (that is, the preceding CDRM statement is intended to define a CDRM in another network).
- A GWPATH statement should not have been coded (that is, the preceding CDRM statement is intended to define a CDRM in this network).
- If the host needs to be gateway capable, specify GWSSCP=YES when VTAM is started.
- If the host does not need to be gateway capable, remove the GWPATH statement from the CDRM definition.

IST715I **CONFIG** *configname* **CDRM** *statementname* **IGNORED — GWPATH STMT MISSING**

Explanation: A GWPATH definition statement is required for all cross-network CDRMs, unless you allow the gateway path to default by specifying the SUBAREA operand on the CDRM statement, *statementname*. This message is issued if the following conditions exist:

1. A NETWORK or CDRM definition statement in CDRM major node *configname* precedes at least one valid GWPATH statement for CDRM *statementname*.
2. The SUBAREA operand is not specified on statement *statementname* or on a GWPATH statement.

System Action: The CDRM statement *statementname* is ignored; therefore, the CDRM cannot be activated from this host's network.

Operator Response: Save the system log for problem determination.

Programmer Response: Ensure that a GWPATH definition statement is defined for every CDRM except for those in this host's network. Or, if you want to use the default gateway paths, ensure that the CDRM statement has a valid SUBAREA operand specified.

IST716I *command* **FOR** *linkstation* **FAILED**

Explanation: This message is the first of a group of messages. A full description of the message group follows.

```
IST716I  command FOR linkstation FAILED
IST717I  NETID netid ID nodename SA subarea {CANNOT BE DEFINED|NNODE TYPE INVALID}
```

The *command* for link station *linkstation* failed when the adjacent node *nodename* was contacted during the activation of the link station.

See Chapter 14, "Command and RU types in VTAM messages" on page 685 for a description of *command*.

The indicated adjacent node is in network *netid* and has a subarea address of *subarea*.

One of the following conditions caused the failure:

CANNOT BE DEFINED
VTAM could not define the indicated adjacent node because of either insufficient storage or an inability to interpret the adjacent network's addresses.

NODE TYPE INVALID
The indicated adjacent node, as identified by its network address, is not a PU type 4 or PU type 5.

System Action: The link station is deactivated and command processing is halted.

Operator Response:

CANNOT BE DEFINED
Try to activate the link station again. If the activation is unsuccessful, enter the DISPLAY BFRUSE command. Save the system log and request a dump for problem determination.

NODE TYPE INVALID
Save the system log for problem determination.

Programmer Response:

CANNOT BE DEFINED
Check storage availability and code a BUILD or NETWORK definition statement with the MAXSUBA operand for the adjacent network *netid* in the NCP major node definition that is activated by this host.

NODE TYPE INVALID
The indicated adjacent node is known to VTAM as a node other than a PU type 4 or PU type 5. It may be known as a cross-network resource. Check address assignments within the network *netid*.

IST717I NETID *netid* **ID** *nodename* **SA** *subarea* **{CANNOT BE DEFINED|NODE TYPE INVALID}**

Explanation: VTAM issues this message as part of a group of messages. The first message in the group is IST716I. See the explanation of that message for a full description.

IST718I ADDRESS INVALID FOR NETID=*cdrmnetid* **CDRM=***cdrmname* **CODE=X'***code***'**

Explanation: This message is the first in a group of messages. A complete description of the message group follows.

```
 IST718I  ADDRESS INVALID FOR NETID=cdrmnetid CDRM=cdrmname CODE=X'code'
 IST719I {SUBAREA subarea ELEMENT el|ADJNET netid ADJNETSA  adjnetsa ADJNETEL el} [GWN gwn]
[IST1421I nodetype resourcename HAS DUPLICATE ADDRESS]
 IST314I END
```

IST718I

This message is issued during activation of the CDRM major node when the specified address (adjacent network *netid*, subarea *subarea*, element *el*) of *cdrmname* could not be defined.

cdrmnetid is the network identifier for *cdrmname*.

cdrmname is the name of the cross-network CDRM minor node.

code is the return code resulting from the attempt to define the network address. Possible return codes (expressed in hexadecimal) are:
04 Invalid address
10 Duplicate address
20 Insufficient storage
28 Address management error

IST719I

The operands and their values displayed are the same as those specified in a GWPATH definition statement for CDRM *cdrmname*. The name of the gateway NCP, *gwn*, will be displayed if it is specified in the definition statement.

If other GWPATH definition statements have been defined for *cdrmname*, they can be used to establish the SSCP-SSCP session.

IST1421I

This message is issued when VTAM detects a duplicate address for the CDRM minor node.

nodetype is the node type of *resourcename*. See Chapter 15, “Node and ID types in VTAM messages” on page 697 for a description of *nodetype*.

resourcename is the name of the cross-network CDRM minor node that is currently defined to the address in question. The form of *resourcename* is *netid.name*.

System Action: Processing continues.

Operator Response: Action depends on value for *code*:

04 Save the system log for problem determination.

10 Save the system log for problem determination.

20

Enter the DISPLAY BFRUSE command to display information about the common service area (CSA). Enter the DISPLAY STORUSE command to display storage usage for storage pools. Total VTAM private storage information is displayed in message IST981I. If message IST981I does not appear in the display, you may need to reissue the DISPLAY STORUSE command, specifying a higher value for the NUM operand. Save the system log for problem determination.

28 Save the system log for problem determination.

Programmer Response: The indicated address could not be added to VTAM’s address structure because of the reasons specified.

04 Check your network address assignments.

10 Check your network address assignments.

20 Examine your storage allocation and increase storage as required.

28 This code indicates that a VTAM error has occurred in managing the address directory.

Take the following actions:

- If you have access to IBMLink, search for known problems in this area. If no applicable matches are found, report the problem to IBM by using the Electronic Technical Report (ETR) option on IBMLink.
- If you do not have access to IBMLink, report the problem to the IBM software support center.

See the section on non-VTAM problems, in the *z/OS Communications Server: SNA Diagnosis Vol 1, Techniques and Procedures* for additional problem determination actions.

IST719I **{SUBAREA** *subarea* **ELEMENT** *el***|ADJNET** *netid* **ADJNETSA** *adjnetsa* **ADJNETEL** *el***} [GWN** *gwn***]**

Explanation: This message is part of a message group. The first message in the group is IST718I. See the explanation of that message for a full description.

IST720I *linkstation* **HAS CONTACTED** *nodename* **IN** *netid***, SA** *subarea*

Explanation: The link station *linkstation* has successfully contacted the PU type 4 or PU type 5 identified by network *netid*, node *nodename*, and subarea *subarea*. If node *nodename* is not available, ***NA*** will be displayed in its place.

System Action: The link station is activated.

Operator Response: None.

Programmer Response: None.

IST721I **SESSION SETUP FOR CDRM** *cdrmname* **USING GWN** *gatewayncp* **FAILED**

Explanation: VTAM issues this message as part of several message groups in response to a VARY ACT,ID=*cdrmname* command. If this message is preceded by message IST732I, see the explanation of that message for a complete description; otherwise, it is the first in a group of messages. A complete description of the message group follows.

```
IST721I  SESSION SETUP FOR CDRM cdrmname USING GWN gatewayncp FAILED
IST723I  SSCPID sscpid ALREADY IN USE BY CDRM oldcdrm
```

The cross-network SSCP-SSCP session with CDRM *cdrmname* could not be established using gateway NCP *gatewayncp*.

sscpid is the network identifier of the SSCP that was specified on the SSCPID start option, and is displayed in hexadecimal.

The session failed because more than one SSCP in another network (one of them being CDRM *oldcdrm*) was started with the same value for the SSCPID start option as *sscpid*.

System Action: The session activation request failed. Other processing continues.

Operator Response: Save the system log and network logs for problem determination.

Programmer Response:

- Restart one or more of the other network hosts with a different SSCPID start option value. SSCPID values must be unique across networks if two SSCPs are to communicate.
- Ensure that only one of the host CDRMs with duplicate SSCPIDs is active at a time.

IST723I SSCPID *sscpid* **ALREADY IN USE BY CDRM** *oldcdrm*

Explanation: This message is part of a message group. The first message in the group is IST721I. See the explanation of that message for a complete description.

IST725I GWN *gatewayncp*, **SUBAREA** *subarea*, **CDRM ALIAS ELEMENT** *element*

Explanation: This message is part of a message group. The first message in the group is IST732I. See the explanation of that message for a complete description.

IST726I ADJNET *adjnetid*, **ADJNETSA** *adjnetsubarea*, **ADJNETEL** *adjnetel*

Explanation: This message is part of a message group. The first message in the group is IST732I. See the explanation of that message for a complete description.

IST727I COMMUNICATION WITH CDRM *cdrmname* **LOST — REASON = X'***code***'**

Explanation: The session with CDRM *cdrmname* has been disrupted by the session outage notification (SON). The reason for the disruption is shown by the reason code *code* (expressed in hexadecimal). *code* is part of the DACTCDRM request and can be any of the following:

code	**Meaning**
07	Virtual route inoperative: The virtual route carrying the SSCP-PU session has become inoperative, forcing deactivation of the SSCP-PU session.
0B	Virtual route deactivation: The identified SSCP-PU session had to be deactivated because of a forced deactivation of the virtual route being used by the SSCP-PU session.
0C	SSCP failure—unrecoverable: The identified SSCP-SSCP session had to be deactivated because one of the session's SSCPs abnormally terminated; recovery from the failure was not possible.
0D	Session override: The SSCP-PU session had to be deactivated because of a more recent session activation request for the same session over a different virtual route.
0E	SSCP failure—recoverable: The identified SSCP-SSCP session had to be deactivated because of an abnormal termination of one of the SSCPs of the session; recovery from the failure may be possible.
0F	Cleanup: The SSCP is resetting its half-session before receiving the response from the partner SSCP receiving the DACTCDRM.
10	SSCP contention: Two SSCPs have sent each other an ACTCDRM request over different virtual routes; the SSCP receiving the ACTCDRM from the SSCP with the greater SSCP ID (SSCPID start option) sends DACTCDRM, with code X'10', to the other SSCP over the same virtual route on which the contention-losing ACTCDRM was sent.
11	Gateway node cleanup: A gateway node is cleaning up the session because the gateway SSCP session partner has forced deactivation of the session (via NOTIFY).

System Action: The session with CDRM *cdrmname* is deactivated without disrupting active LU-LU sessions.

Operator Response: Save the system log and network logs and print the CDRM definition for problem determination. Issue a VARY ACT command for CDRM *cdrmname* so that the session can be re-established.

Programmer Response: Consult *SNA Formats* for the RU formats, especially DACTCDRM and its reason codes. The meaning of the reason code, *cause* is found under the explanation of DACTCDRM.

IST728I GWPATHS FOR GWN *gatewayncp* **ARE NOW** *status* **FOR THESE CDRMS**

Explanation: This message is the first of a group of messages. A full description of the message group follows.

```
IST728I  GWPATHS FOR GWN gatewayncp ARE NOW status FOR THESE CDRMS
IST778I  cdrmname1 [cdrmname2] [cdrmname3] [cdrmname4] [cdrmname5] [cdrmname6]
⋮
IST314I  END
```

An SSCP-PU session with gateway node *gatewayncp* has just been established (*status* = **ENABLED**) or broken (*status* = **DISABLED**). Paths to the displayed CDRMs, as defined by the GWPATH statement, have been enabled or disabled. This change in session state affects the capabilities of any cross-network SSCP-SSCP session supported by that gateway node. Message IST778I lists the names of all CDRMs affected by the change. Message IST314I ends the list of IST778I messages.

System Action: Processing continues. Any pending session activation requests to any of the displayed CDRMs will be retried.

Operator Response: None.

Programmer Response: If the SSCP-PU session is DISABLED and the gateway functions are necessary for cross-network sessions supported by any of the listed CDRMs, and the gateway node *gatewayncp* cannot be reactivated, it may be necessary to deactivate that CDRM and reactivate it with a different gateway NCP specified so that the new gateway NCP can support this SSCP-SSCP session.

Note: Deactivating the SSCP-SSCP session may disrupt active LU-LU sessions.

IST732I *request* **REJECTED DUE TO** *reason*

Explanation: VTAM issues this message as a single message or as part of several message groups. If this message is preceded by message IST734I (cross-network session), see the explanation of that message for additional information.

Possible message groups follow.

1. **ACTCDRM**

   This host received an **ACTCDRM** *request* from an external CDRM.

   - If IST732I is issued as a single message, the request cannot be processed for the following *reason*:

     HOST CDRM INACTIVE
     No CDRM major node containing a definition for the host CDRM was active or the host CDRM is inactive.

   - Otherwise, IST732I is issued as the first message in the following group:

     ```
     IST732I  request REJECTED DUE TO reason
     IST725I  GWN gatewayncp, SUBAREA subarea, CDRM ALIAS ELEMENT element
     IST726I  ADJNET adjnetid, ADJNETSA adjnetsubarea, ADJNETEL adjnetel
     ```

     The request cannot be processed for the following *reason*:

     SENDING CDRM UNKNOWN
     The sender of the ACTCDRM request is not defined in this host.

     gatewayncp is the name of a gateway NCP.

     subarea and *element* are the subarea and element portions of the alias address of the external CDRM in this network.

     The address of the CDRM, as defined in the adjacent network *adjnetid*, is subarea *adjnetsubarea* and element *adjnetel*.

2. **REQACTCDRM**

   This host received a **REQACTCDRM** *request* from external CDRM *cdrmname* over a gateway NCP path.

   ```
    IST732I  request REJECTED DUE TO reason
    [IST1421I nodetype resourcename HAS DUPLICATE ADDRESS]
   IST721I  SESSION SETUP FOR CDRM cdrmname USING GWN gatewayncp FAILED
    IST726I  ADJNET adjnetid, ADJNETSA adjnetsubarea, ADJNETEL adjnetel
   [IST830I  ORIGINATING SSCP NAME = sscpname, NETID = netid]
   ```

   The request cannot be processed for one of the following *reason*s:

   ACTIVATE IN PROGRESS
   Either the origin CDRM or the destination CDRM is pending active.

   ADDRESS NOT A CDRM
   The adjacent network address in message IST726I is in use by a resource that is not a CDRM. For the

REQACTCDRM to succeed, the adjacent network address **MUST** be a CDRM resource. *resourcename* in message IST1421I contains the name of the resource using the address (if the name is available).

HOST CDRM INACTIVE
No CDRM major node containing a definition for the host CDRM was active or the host CDRM is inactive.

INACT IN PROGRESS
The origin CDRM, the destination CDRM, or the CDRM major node is pending inactive.

INSUFFICIENT STORAGE
No storage could be allocated to proceed with session setup.

SENDING CDRM UNKNOWN
The sender of the ACTCDRM is not defined in this host.

SENDING GWN INACTIVE
There is no active definition for the gateway NCP *gatewayncp* that sent the REQACTCDRM.

SENDING GWN INVALID
No GWPATH definition exists for the gateway NCP *gatewayncp* that sent the REQACTCDRM.

gatewayncp is the name of the gateway NCP.

The address of CDRM *cdrmname*, as defined in the adjacent network *adjnetid*, is subarea *adjnetsubarea* and element *adjnetel*.

The **REQACTCDRM** originated with SSCP *sscpname* in network *netid*. If *sscpname* or *netid* are not known to VTAM, they will be displayed as ***NA***.

System Action: The session could not be established.

Operator Response: Do one of the following, depending upon *reason*:

ACTIVATE IN PROGRESS
No action is required.

ADDRESS NOT A CDRM
Enter a DISPLAY ID=resourcename using *cdrmname* from message IST1421I. Enter a DISPLAY VTAMSTOR,NETID=adjnetid,NETADDR=(adjnetsubarea,adjnetel) command using the values from message IST726I. Save the console log for problem determination.

HOST CDRM INACTIVE
Activate a CDRM major node containing the host CDRM definition, if the major node is active, or activate the host CDRM.

INACT IN PROGRESS
Allow the deactivation to complete and then try the activation again.

INSUFFICIENT STORAGE
Enter a DISPLAY BFRUSE or DISPLAY STORUSE command to evaluate your storage requirements. Save the system log and dump for problem determination.

SENDING CDRM UNKNOWN
If the CDRM major node contains the definition of the external CDRM then activate it. Otherwise, save the system log and network logs and print the CDRM definition statement for problem determination.

SENDING GWN INACTIVE
Activate the gateway NCP.

SENDING GWN INVALID
Save the system log and network logs and print the CDRM definition statement for problem determination.

Programmer Response:

ADDRESS NOT A CDRM
Check your network address assignments to determine which resource should be using the adjacent network address.

INSUFFICIENT STORAGE

Verify that the operator entered the buffer pool or CSA start options as specified in the start procedures. Increase storage as required. For insufficient storage errors, you might want to redefine your buffer pool or CSA start options. If the start option cannot be modified using the MODIFY VTAMOPTS command, you must modify the VTAM start options file (ATCSTRxx) and restart VTAM to use the start option.

- See the *z/OS Communications Server: SNA Migration* to determine the storage requirements for VTAM.
- See the *z/OS Communications Server: SNA Resource Definition Reference* for a description of VTAM start options.
- See the *z/OS Communications Server: SNA Operation* for information about the DISPLAY BFRUSE Command, the DISLPLAY STORUSE Command and theMODIFY VTAMOPTS Command.
- See the *z/OS Communications Server: SNA Network Implementation Guide* for an explanation and description of buffer pools and for general information on buffer pool specification and allocation.
- See the *z/OS Communications Server: SNA Diagnosis Vol 2, FFST Dumps and the VIT* for information about analyzing dumps and about analyzing storage using the VIT analysis tool.

SENDING GWN INVALID

You need to add a gateway path definition for the gateway NCP that sent the REQACTCDRM. To use the new definition, you must deactivate and reactivate the CDRM major node that contains the new GWPATH definition.

SENDING CDRM UNKNOWN

You need to add a CDRM definition statement for *cdrmname*. To use the new definition, you must deactivate and reactivate the CDRM major node.

IST734I ACTIVATION OF CDRM *cdrmname* USING GWN *gatewayncp* FAILED

Explanation: VTAM issues this message when an ACTCDRM is sent by host CDRM *cdrmname* via gateway NCP *gatewayncp* in an attempt to establish an SSCP-SSCP session.

gatewayncp is the name of a gateway NCP. If unknown to VTAM, *gatewayncp* will be displayed as ***NA***.

System Action:

- If this message is displayed as a single message or is followed by IST735I, session establishment is still in progress through other gateway nodes.
- If followed by message IST732I, the session could not be established.

Operator Response:

- If this message is displayed as a single message or is followed by message IST735I, additional messages will describe the status of the session as processing continues.
- If followed by message IST732I, see the operator response of that message for recommended action.

Programmer Response:

- If this message is displayed as a single message or is followed by message IST735I, session establishment is still in progress, and no response is needed.
- If followed by message IST732I, see the programmer response of that message for recommended action.

IST735I NO ADDRESS TRANSFORMS — REQACTCDRM SENT

Explanation: An ACTCDRM was sent during an attempt to establish an SSCP-SSCP session. There were no active alias address transforms in a gateway NCP along the path to the external CDRM. This can happen in one of the following situations:

- In a back-to-back gateway configuration, the second gateway NCP may not yet have received an RNAA request from the external CDRM.
- The external CDRM is responsible for sending an RNAA request to a gateway NCP in a network adjacent to this host, but it has not yet sent the request.
- This host SSCP does not have a session with one or more gateway NCPs supporting the desired SSCP-SSCP session.

If preceded by message IST734I, this message is for a cross-network session.

System Action: The activation of the desired SSCP-SSCP session will be attempted from the CDRM indicated by *cdrmname* in message IST734I.

Operator Response: Wait for message IST324I to be displayed indicating that the external CDRM has sent a session activation request (ACTCDRM). If VTAM issues message IST324I promptly, no response if required. If this message does not appear within a reasonable amount of time, save the system log and network logs for problem determination.

Check with the operator of the external host CDRM to see that all session activation procedures at that host have been completed.

Programmer Response: Verify that the CDRM and gateway NCP definitions are correct and that those definitions contain sufficient data for routing an ACTCDRM request from the external CDRM to this host SSCP.

IST737I DEFAULT VR LIST USED FOR CDRM *cdrmname* **USING GWN** *gatewayncp*

Explanation: This message indicates one of the following:

- Gateway NCP *gatewayncp* does not have a COS table defined for the network in which *cdrmname* resides.
- Gateway NCP *gatewayncp* has a COS table defined for the network in which *cdrmname* resides, but VTAM could not find an entry within the table that matches the name specified in the logon mode table.

If an alias application is active in this host, VTAM attempts to translate the SSCP class-of-service entry ISTVTCOS into a name recognized in the adjacent network. This message indicates that no COS table entry with the translated name or with the default name (ISTVTCOS) exists in the adjacent network. As a result, the default (blank) COS table entry is used to activate a virtual route to external CDRM *cdrmname*, originating at gateway NCP *gatewayncp*.

System Action: Session activation proceeds using the virtual route (VR) list from the default COS entry.

Operator Response: Save the system log and network logs for problem determination.

Programmer Response: If the session could not be established and is necessary, take one of the following two sequences of steps:

- If the appropriate COS table is not defined:
  - then
    - Use the MODIFY TABLE,OPTION=LOAD,ORIGIN=*gatewayncp* command to load the appropriate COS table for the network in which *cdrmname* resides.
  - or
    - Deactivate gateway NCP *gatewayncp*.
    - Add the appropriate COSTAB keyword to the NETWORK definition statement for the network in which *cdrmname* resides for the gateway NCP *gatewayncp*'s generation deck.
    - Reactivate gateway NCP *gatewayncp*.
  - or, if the problem involves an alias application:
    - Activate the alias application.
    - Update the alias-name translation tables (see the *NetView Installation and Administration Guide* for more information).
- If no matching entry can be found in the COS table:
  - then
    - Deactivate gateway NCP *gatewayncp*.
    - Add the required entry to the COS table identified by the COSTAB keyword of the NETWORK definition statement in the gateway NCP *gatewayncp*'s definition deck.
    - Reactivate gateway NCP *gatewayncp*.
  - or use the MODIFY TABLE,OPTION=ASSOCIATE, TYPE=COSTAB, ORIGIN=*gatewayncp* command to associate a COS table that has the required entry to gateway NCP *gatewayncp*.

IST740I UNABLE TO FREE ALIAS ADDRESSES FOR CDRM *cdrmname* **GWN** *gatewayncp*

Explanation: This message is the first of a group of messages. A full description of the message group follows.

```
IST740I  UNABLE TO FREE ALIAS ADDRESSES FOR CDRM cdrmname GWN gatewayncp
IST523I  REASON = reason
```

Because of an error indicated by *reason*, VTAM was unable to free a pair of alias-network addresses, causing the failures of subsequent activation of the external CDRM *cdrmname* using gateway NCP *gatewayncp*. This condition may be temporary if caused by heavy activity in the network. It may be an indication that VTAM does not have sufficient storage to manage a network of this size.

The *reason* for the failure is one of the following:

INSUFFICIENT STORAGE
VTAM was unable to allocate sufficient storage. A NOTIFY RU was sent to the gateway NCP *gatewayncp* to free alias-network addresses for an SSCP-SSCP session.

NOTIFY REQUEST FAILED
A NOTIFY RU was sent to gateway NCP *gatewayncp* to free alias-network addresses for an SSCP-SSCP session. Gateway NCP *gatewayncp* was unable to free the alias-network addresses.

System Action: The deactivation process continues.

Operator Response: If the major node containing CDRM *cdrmname* is still active, reissue the VARY INACT command for that CDRM.

You may have to deactivate the NCP major node for *gatewayncp* to free alias-network addresses if:

- Additional messages are displayed indicating that session-establishment attempts are failing because the gateway NCP has no alias-network addresses available.
- The major node containing the external CDRM definition is inactive.

If *reason* is **INSUFFICIENT STORAGE**, enter the DISPLAY BFRUSE command. Save the system log and dump for problem determination.

Programmer Response: If *reason* is **INSUFFICIENT STORAGE**, ensure that the amount of available storage is adequate for your network and increase storage as required. For insufficient storage errors, you might want to redefine your buffer pool or CSA start options. If the start option cannot be modified using the MODIFY VTAMOPTS command, you must modify the VTAM start options file (ATCSTRxx) and restart VTAM to use the start option.

- See the *z/OS Communications Server: SNA Migration* to determine the storage requirements for VTAM.
- See the *z/OS Communications Server: SNA Resource Definition Reference* for a description of VTAM start options.
- See the *z/OS Communications Server: SNA Operation* for information about the DISPLAY BFRUSE Command, the DISPLAY STORUSE Command, and the MODIFY VTAMOPTS Command.
- See the *z/OS Communications Server: SNA Network Implementation Guide* for an explanation and description of buffer pools and for general information on buffer pool specification and allocation.
- See the *z/OS Communications Server: SNA Diagnosis Vol 2, FFST Dumps and the VIT* for information about analyzing dumps and about analyzing storage using the VIT analysis tool, if external trace is active.

IST742I ACTIVATION OF CDRM *cdrmname* **{FAILED|QUEUED} — GWN PATH NOT AVAILABLE**

Explanation: During the activation of a cross-network CDRM, no gateway NCP could be selected to support the SSCP-SSCP session with external CDRM *cdrmname*.

If VTAM could find no active gateway NCPs, only this message will be issued. If VTAM was able to select an active gateway NCP, messages issued prior to this one indicate the failures that occurred.

System Action: If activation is:

QUEUED
The activation of external CDRM *cdrmname* is queued pending the availability of a suitable gateway NCP as defined by the GWPATH statements for CDRM *cdrmname*.

FAILED
The activation of external CDRM *cdrmname* failed because of insufficient storage, or all paths as defined by the GWPATH statements for CDRM *cdrmname* have been tried and have failed.

Operator Response: If you do not want the activation to remain pending, issue a VARY INACT command for the CDRM *cdrmname*.

Otherwise, save the system log and network logs for problem determination.

Programmer Response: This message is normal if:

- During activation, paths failed but were expected to fail.
- An existing SSCP-SSCP session was disrupted because of the failure of the session from the host SSCP to the gateway NCP.

No action is necessary if, upon recovery of the gateway NCP or an alternate gateway path, the SSCP-SSCP session re-established itself.

You will probably need to add to or change the GWPATH definitions associated with the external CDRM or change the GWNAU definition in the gateway NCP if:

- This message occurs upon initial activation of the external CDRM.
- The activation of the external CDRM or appropriate gateway NCP does not result in recovery of the session.

Refer to the *z/OS Communications Server: SNA Network Implementation Guide* for more information on how the GWPATH and GWNAU definition statements relate to CDRM activation.

IST744I CROSS-NETWORK SESSION SETUP FAILED, NETWORK = *netid*

Explanation: This message is the first in two message groups. A full description of the two message groups follows.

The message group displayed depends on the type of session, as follows:

- If the session-establishment attempt was for an SSCP-SSCP session, the failed request is ACTCDRM and the following group of messages is issued:

```
 IST744I  CROSS-NETWORK SESSION SETUP FAILED, NETWORK = netid
 IST745I  ACTCDRM TO CDRM = cdrmname FAILED, SENSE = code
 IST531I  FROM SUBAREA = subarea, ELEMENT = element
 IST531I  TO SUBAREA = subarea, ELEMENT = element
[IST528I  VIRTUAL ROUTE NUMBER vrlist]
 IST523I  REASON = {SESSION SETUP REJECTED|VR ACTIVATION FAILED}
```

  An ACTCDRM request was sent to CDRM *cdrmname*.

  code is the sense data from the negative response to an ACTCDRM request. See the *z/OS Communications Server: IP and SNA Codes* for a description of *code*.

- If the session-establishment attempt was for an LU-LU session, the failed request is a BIND RU and the following group of messages is issued:

```
 IST744I  CROSS-NETWORK SESSION SETUP FAILED, NETWORK = netid
 IST746I  BIND FAILED FROM pluname TO sluname, SENSE = code
 IST531I  FROM SUBAREA = subarea, ELEMENT = element
 IST531I  TO SUBAREA = subarea, ELEMENT = element
[IST528I  VIRTUAL ROUTE NUMBER vrlist]
 IST523I  REASON = {SESSION SETUP REJECTED|VR ACTIVATION FAILED}
```

  The real name of the primary logical unit (PLU) is *pluname*, and the real name of the secondary logical unit (SLU) is *sluname*. *code* is the sense data from the negative response to the BIND request. See the *z/OS Communications Server: IP and SNA Codes* for complete sense code information.

The first display of message IST531I indicates the PLU's address, as known in network *netid* (subarea *subarea* and element *element*). If the subarea and element addresses are unknown, VTAM issues either **0** or ***NA*** in place of the address.

The second display of message IST531I indicates the SLU's address as known in network *netid* (subarea *subarea* and element *element*). If the subarea and element addresses are unknown, VTAM issues either **0** or ***NA*** in place of the address.

The reason for the session activation failure is indicated by message IST523I:

SESSION SETUP REJECTED
The gateway NCP has received a negative response to the session activation request.

VR ACTIVATION FAILED
A virtual route in network *netid* could not be activated. Message IST528I may also be displayed with *vrlist* providing a list of virtual routes that the gateway NCP tried to activate in network *netid*.

System Action: Session activation fails.

Operator Response: Enter the DISPLAY ROUTE command for all networks involved in this session setup to display the status of explicit routes and virtual routes. Save the system log for problem determination.

Programmer Response:

SESSION SETUP REJECTED
Review the logon mode table entry used with the session.

VR ACTIVATION FAILED
Ensure that all COS table definitions and PATH definition statements are correct and that all required links and nodes are active.

If all definitions are correct, and all required links and nodes are active, take the following actions:

- If you have access to IBMLink, search for known problems in this area. If no applicable matches are found, report the problem to IBM by using the Electronic Technical Report (ETR) option on IBMLink.
- If you do not have access to IBMLink, report the problem to the IBM software support center.

IST745I ACTCDRM TO CDRM = *cdrmname* **FAILED, SENSE =** *code*

Explanation: VTAM issues this message as part of a message group. The first message in the group is IST744I. See the explanation of that message for a complete description.

IST746I BIND FAILED FROM *pluname* **TO** *sluname*, **SENSE =** *code*

Explanation: VTAM can issue this message as the first message in a group or as part of a group of messages that begins with message IST744I. See the explanation of that message for a complete description.

When IST746I appears as the first message in a group, VTAM displays the following:

```
 IST746I  BIND FAILED FROM pluname TO sluname, SENSE = code
 IST531I  FROM SUBAREA = subarea, ELEMENT = element
 IST531I  TO SUBAREA = subarea, ELEMENT = element
[IST528I  VIRTUAL ROUTE NUMBER vrlist]
 IST523I  REASON = VR ACTIVATION FAILED
```

The NCP could not activate a virtual route from an independent PLU *pluname* to a SLU *sluname* in VTAM's network.

The first display of message IST531I indicates the PLU's address, as known in network *netid* (subarea *subarea* and element *element*). If the subarea and element addresses are unknown, VTAM issues either **0** or ***NA*** in place of the address.

The second display of message IST531I indicates the SLU's address as known in network *netid* (subarea *subarea* and element *element*). If the subarea and element addresses are unknown, VTAM issues either **0** or ***NA*** in place of the address.

System Action: Session activation fails.

Operator Response: Save the system log for problem determination.

Programmer Response: Ensure that all COS table definitions and PATH definition statements are correct. Ensure that all required links and nodes are active.

IST751I SIO = *sio*, **ERROR CT =** *count*, **CUA =** *device_address*

Explanation: VTAM issues this message in response to a DISPLAY ID command requesting the status of a channel-attachment major node for a communication-adapter line.

sio is the number of start-I/O operations counted for the node. This number is cumulative (from the time that the node was last activated). The value of *sio* is never larger than 65535. If *sio* is 65535, its value is reset to 0 when the next start I/O operation takes place. If the value of *sio* is unavailable, VTAM issues ***NA***.

count is the number of I/O errors counted for the node. This number is cumulative (from the time that the node was last activated). VTAM issues *****NA***** if *count* is not available.

device_address is the hexadecimal channel address of the line to which this node is attached. VTAM issues ***NA** if *device_address* is not available.

System Action: Processing continues.

Operator Response: None.

Programmer Response: None.

IST752I GPT TRACE STATUS = *status***[ALSNAME =** *alsname***]**

Explanation: This message is part of a group of messages that VTAM issues in response to a DISPLAY command requesting the status of a node.

The message indicates the current state of the generalized PIU trace (GPT) for that node.

See the *z/OS Communications Server: IP and SNA Codes* for more information on trace status code *status*.

For a DISPLAY command for an independent LU, VTAM indicates the name of all adjacent link stations (ALS) that the independent LU is using. VTAM issues message IST752I once for each adjacent link station. VTAM issues this message only for adjacent link stations that exist in an NCP major node (or, for a switched connection, link stations that are connected through a link in an NCP major node).

System Action: None.

Operator Response: None.

Programmer Response: None.

IST755I ALERT FROM PU *puname* **FOLLOWS**

Explanation: VTAM has received an unsolicited Record Formatted Maintenance Statistics (RECFMS) request of type 0 from a communication controller *puname*. VTAM always issues a second message, which describes the specific information depending on the user action code received from *puname*. See the description of the second message for additional information.

This message and the message following it will not be received if there is a communication network management (CNM) application program defined and active to receive the RECFMS RU.

IST756E ALERT FROM PU *puname* **FOLLOWS**

Explanation: VTAM has received an unsolicited Record Formatted Maintenance Statistics (RECFMS) request of type 0 from a communication controller *puname*. VTAM always issues a second message, which describes the specific information depending on the user action code received from *puname*. See the description of the second message for additional information.

This message and the message following it will not be received if there is a communication network management (CNM) application program defined and active to receive the RECFMS RU.

Note: This message indicates that you must eventually take some action to correct this problem, but the system continues processing without waiting for your response.

IST757E MOSS UNAVAILABLE — HARDWARE ERROR

Explanation: The maintenance and operator subsystem (MOSS) of the IBM 3725 or 3745 Communication Controller is unavailable either because the program control switch is in the wrong position or because a hardware error has occurred. This message is always preceded by IST756E, which identifies the name of the communication controller. The RECFMS request received by VTAM had the user action code of 1 in it. Additional information is provided in the *Operating Guide* for your communication controller.

System Action: Processing continues.

Operator Response: Do not attempt to IPL the communication controller. Save the system log for problem determination.

Programmer Response: Verify that the program control switch is in the correct position. If it is, contact the IBM hardware support center.

IST758E MOSS RELOADED — HARDWARE ERROR

Explanation: The maintenance and operator subsystem (MOSS) of the IBM 3725 or 3745 Communication Controller has been automatically reloaded after a hardware error. This message is always preceded by IST756E, which identifies the name of the communication controller. The RECFMS request received by VTAM had the user action code of 2 in it. Additional information is provided in the *Operating Guide* for your communication controller.

System Action: The error has been successfully recovered. Processing continues.

Operator Response: Issue a MODIFY DUMP,TYPE=MOSS command to transfer the MOSS dump to a host data set to allow another dump on the MOSS diskette. Save the system log for problem determination.

Programmer Response: No action is required unless the problem occurs repeatedly. If it does, contact the IBM hardware support center.

IST759E MOSS DISKETTE UNUSABLE

Explanation: The maintenance and operator subsystem (MOSS) diskette drive or diskette adapter in the IBM 3725 or 3745 Communication Controller is rendered unusable because of a hardware error. This message is always preceded by IST756E, which identifies the name of the communication controller. The RECFMS request received by VTAM had the user action code of 3 in it. Additional information is provided in the *Operating Guide* for your communication controller.

System Action: Processing continues.

Operator Response: Do not attempt to IPL the communication controller. Save the system log for problem determination.

Programmer Response: Contact the IBM hardware support center.

IST760E MOSS DISKETTE HARDWARE ERROR

Explanation: A portion of the maintenance and operator subsystem (MOSS) diskette in the IBM 3725 or 3745 Communication Controller is unusable because of a hardware error. This message is always preceded by IST756E, which identifies the name of the communication controller. The RECFMS request received by VTAM had the user action code of 4 in it. Additional information is provided in the *Operating Guide* for your communication controller.

System Action: Processing continues.

Operator Response: Save the system log for problem determination.

Programmer Response: Contact the IBM hardware support center.

IST761E MOSS CONSOLE UNAVAILABLE

Explanation: A portion of the maintenance and operator subsystem (MOSS) diskette in the IBM 3725 or 3745 Communication Controller is unavailable. This message is always preceded by IST756E, which identifies the name of the communication controller. The RECFMS request received by VTAM had the user action code of 5 in it. Additional information is provided in the Operating Guide for your communication controller.

System Action: All sessions using routes over the failing adapter have been terminated, and appropriate recovery actions have been initiated. Processing continues.

Operator Response: Save the system log for problem determination.

Programmer Response: Check the physical installation and run operator console tests, if desired (as described in the *Operator Console Reference and Problem Analysis Guide* for your communication controller).

If you cannot determine the cause of the problem or need assistance, contact the IBM hardware support center.

IST762I MOSS IN MAINTENANCE MODE

Explanation: The maintenance and operator subsystem (MOSS) of the IBM 3725 or 3745 Communication Controller has been placed in the offline mode by explicit action. This message is always preceded by IST755I, which identifies the name of the communication controller. The RECFMS request received by VTAM had the user action code of 6 in it. Additional information is provided in the *Operating Guide* for your communication controller.

System Action: Processing continues.

Operator Response: Save the system log for problem determination.

Programmer Response: Check for maintenance mode. If incorrect, place MOSS in ONLINE MODE.

IST763I PHYSICAL UNIT RELOADED — HARDWARE ERROR

Explanation: The IBM 3725 or 3745 Communication Controller has been reloaded to recover from a hardware error. This message is always preceded by IST755I, which identifies the name of the communication controller. The RECFMS request received by VTAM had the user action code of 7 in it. Additional information is provided in the *Operating Guide* for your communication controller.

System Action: The error has been successfully recovered. Processing continues.

Operator Response: Save the system log for problem determination.

Programmer Response: No action is required unless the problem occurs repeatedly. If it does, contact the IBM hardware support center.

IST764I PHYSICAL UNIT RELOADED — PRIOR ABEND CODE WAS *code*

Explanation: The IBM 3725 or 3745 Communication Controller has been reloaded to recover from a software error that caused an abend.

code is the abend code.

This message is always preceded by IST755I, which identifies the name of the communication controller. The RECFMS request received by VTAM had the user action code of 8 in it. Additional information is provided in the *Operating Guide* for your communication controller.

System Action: The error has been successfully recovered. Processing continues.

Operator Response: Save the system log for problem determination.

Programmer Response: No action is required unless the problem occurs repeatedly. If it does, check to ensure that the NCP generation matches the hardware configuration, and dump the NCP.

If you cannot determine the cause of the problem or need additional assistance, contact the IBM hardware support center.

IST765E CHANNEL ADAPTER *channelname* **UNAVAILABLE — HARDWARE ERROR**

Explanation: The channel adapter *channelname* in the IBM 3725 or 3745 Communication Controller is unavailable because of a hardware error. This message is always preceded by IST756E, which identifies the name of the communication controller. The RECFMS request received by VTAM had the user action code of 9 in it. Additional information is provided in the *Operating Guide* for your communication controller.

System Action: VTAM terminated all sessions using routes over the failing adapter and initiated appropriate recovery actions.

Operator Response: Save the system log for problem determination.

Programmer Response: Contact the IBM hardware support center.

IST766I DUMP FAILED — NO {MOSS|CSP|NCP} DUMP ON *ncpname* **DISK(ETTE)**

Explanation: VTAM attempted to transfer a dump from the MOSS, CSP, or NCP diskette to the host 3745, 3725 (for MOSS or CSP) or 3720 (for MOSS, CSP, or NCP) Communication Controller for NCP *ncpname*. The attempt terminated because the diskette was empty or VTAM could not find the requested file.

System Action: Dump processing ends.

Operator Response: Issue a dump to the diskette, then reissue the MOSS, CSP, or NCP dump. Despite the empty diskette in the 3725, 3720, or 3745 Communication Controller, some data files may have been transmitted to the host from the NCP. They can be formatted and printed using the NCP utility program.

Programmer Response: None.

IST767E SCANNER *scannernum* **(***line1-line2***) UNAVAILABLE — HARDWARE ERROR**

Explanation: The scanner *scannernum* in the IBM 3725 or 3745 Communication Controller is unavailable because of a hardware error on a possible range of line numbers between *line1* and *line2*. This message is always preceded by IST756E, which identifies the name of the communication controller. The RECFMS request received by VTAM had the user action code of 11 in it. Additional information is provided in the *Operating Guide* for your communication controller.

System Action: All affected lines are inoperative.

Operator Response: Follow the predefined recovery or backup actions, or both, for your network. Save the system log for problem determination.

Programmer Response: Reload the affected scanner. No other action is required unless the problem occurs repeatedly. If it does, contact the IBM hardware support center.

IST768E SCANNER *scannernum* **(***line1-line2***) UNAVAILABLE — HARDWARE ERROR**

Explanation: The scanner *scannernum* in the IBM 3725 or 3745 Communication Controller is unavailable because of a hardware error on a possible range of line numbers between *line1* and *line2*. This message is always preceded by IST756E, which identifies the name of the communication controller. The RECFMS request received by VTAM had the user action code of 12 in it. Additional information is provided in the *Operating Guide* for your communication controller.

System Action: All affected lines are inoperative.

Operator Response: Follow the predefined recovery or backup actions, or both, for your network. Transfer the dump of the communication-scanner processor to a data set in the host using the MODIFY DUMP command. This will allow another dump on the MOSS diskette. Save the system log for problem determination.

Programmer Response: Reload the affected scanner. No other action is required unless the problem occurs repeatedly. If it does, contact the IBM hardware support center.

IST769E SCANNER *scannernum* **(***line1-line2***) UNAVAILABLE — SOFTWARE ERROR**

Explanation: The scanner *scannernum* in the IBM 3725 or 3745 Communication Controller is unavailable because of a software error on a possible range of line numbers between *line1* and *line2*. This message is always preceded by IST756E, which identifies the name of the communication controller. The RECFMS request received by VTAM had the user action code of 13 in it. Additional information is provided in the *Operating Guide* for your communication controller.

System Action: All affected lines are inoperative.

Operator Response: Follow the predefined recovery or backup actions, or both, for your network, and save the system log for problem determination.

Programmer Response: Reload the scanner *scannernum*. No other action is required unless the problem occurs repeatedly. If it does, dump the NCP and contact the IBM hardware support center.

IST770E SCANNER *scannernum* **(***line1-line2***) UNAVAILABLE — SOFTWARE ERROR**

Explanation: The scanner *scannernum* in the IBM 3725 or 3745 Communication Controller is unavailable because of a software error on a possible range of line numbers between *line1* and *line2*. This message is always preceded by IST756E, which identifies the name of the communication controller. The RECFMS request received by VTAM had the user action code of 14 in it. Additional information is provided in the *Operating Guide* for your communication controller.

System Action: All affected lines are inoperative.

Operator Response: Follow the predefined recovery or backup actions or both. Save the system log for problem determination.

Programmer Response: No action is required unless the problem occurs repeatedly. If it does, dump the NCP and contact the IBM hardware support center.

IST771E SCANNER *scannernum* **LINE** *linename* **UNAVAILABLE — HARDWARE ERROR**

Explanation: The scanner *scannernum* on line *linename* in the IBM 3725 or 3745 Communication Controller is unavailable because of a hardware error. This message is always preceded by IST756E, which identifies the name of the communication controller. The RECFMS request received by VTAM had the user action code of 15 in it. Additional information is provided in the *Operating Guide* for your communication controller.

System Action: Processing continues.

Operator Response: Save the system log for problem determination.

Programmer Response: Reactivate the affected line. No other action is required unless the problem occurs repeatedly. If it does, contact the IBM hardware support center.

IST772I UAC = *uac* **[Q1 =** *qualifier1* **Q2 =** *qualifier2* **[Q3 =** *qualifier3***]]**

Explanation: VTAM issues this message as part of a message group. The first message in the group is IST755I. An alert has been received with a user action code (**UAC**) of *uac*. Any qualifiers that were contained in the alert will also be displayed (from 0–3 qualifiers).

Notes:

1. The qualifier text is printed if qualifiers are received with the alert. For example:
   - If two qualifiers are attached to the alert, VTAM will not display the **Q3 = qualifier3** text.
   - If no qualifiers are attached to the alert, VTAM will display only *uac*.
2. If VTAM displays a UAC that is not listed below, VTAM does not recognize the UAC. See *IBM 3720/3721 Communication Controller Daily Task and Problem Determination* for information regarding UACs not listed in this manual.

A full description of the message based on the UAC follows:

UAC=01

Explanation: The maintenance and operator subsystem (MOSS) has a hardware error or there is a control program to MOSS communication error.

System Action: Processing continues.

Operator Response:

– Do not attempt to IPL the 3720.

– Perform a MOSS IML, set the Function Select switch of the 3720 operator panel to “NORMAL,” and set the MOSS online.

  See the *IBM 3720/3721 Communication Controller Operator’s Guide*

– Use a MODIFY DUMP,TYPE=MOSS command to transfer the MOSS dump to the host for later printing.

– If the problem persists, do not transfer the last MOSS dump. Save the system log for problem determination.

Programmer Response: Note the control program to MOSS interface status (**Q1**) and contact the IBM hardware support center.

UAC=02

Explanation: The maintenance and operator subsystem (MOSS) has a recoverable error. The MOSS has been automatically reloaded.

System Action: Processing continues.

Operator Response:

– Use a MODIFY DUMP,TYPE=MOSS command to transfer the MOSS dump to the host for later printing.

– If the problem persists, do not transfer the last MOSS dump. Save the system log for problem determination.

Programmer Response: Note the reference code (**Q1**). Contact the IBM hardware support center.

UAC=03

Explanation: The maintenance and operator subsystem (MOSS) has a diskette drive or diskette adapter error.

System Action: Processing continues.

Operator Response: Save the system log for problem determination.

Programmer Response: Contact the IBM hardware support center.

UAC=04

Explanation: The maintenance and operator subsystem (MOSS) has a diskette media error.

System Action: Processing continues.

Operator Response: Save the system log for problem determination.

Programmer Response: Contact the IBM hardware support center.

UAC=05

Explanation: The maintenance and operator subsystem (MOSS) has a local console error.

System Action: Processing continues.

Operator Response: Save the system log for problem determination.

Programmer Response:

- Verify that the local console operates in IBM 3101 mode. See the *IBM 3720/3721 Communication Controller Problem Determination Guide*
- Run a console test. See the console documentation.
- Check the cable.
- Run a console link test from the 3720 operator panel. See *IBM 3720/3721 Communication Controller Daily Task and Problem Determination*
- If no problem appears, note the reference code (**Q2**), and contact the IBM hardware support center.

UAC=06

Explanation: The maintenance and operator subsystem (MOSS) is offline because of maintenance mode.

System Action: Processing continues.

Operator Response: Save the system log for problem determination.

Programmer Response: Check for maintenance mode. If it is correct, set MOSS online.

See the *IBM 3720/3721 Communication Controller Operator's Guide*

UAC=07

Explanation: The communication controller has a hardware error. A communication controller IPL was re-executed.

System Action: Processing continues.

Operator Response:
- Reactivate lines from host.
- If the problem persists, save the system log for problem determination.

Programmer Response: Note the abend code (**Q1**) and the reference code (**Q2**). If you cannot determine the cause of the problem or need additional assistance, contact the IBM hardware support center.

UAC=08

Explanation: The communication controller has a software error. A communication controller IPL was re-executed.

System Action: Processing continues.

Operator Response:
- Reactivate lines from host.
- If the problem persists, save the system log for problem determination.

Programmer Response:

- Ensure no mismatch exists between the hardware configuration and the control program generation (NCPCA, CA, HICHAN, LOCHAN). Valid for abend codes 912 and 915. Correct the generation problem, if any.

– Dump the NCP and analyze the dump according to abend code (**Q1**).
– If the problem does not appear to be a software problem, note the reference code (**Q2**) and contact the IBM hardware support center.

UAC=09

Explanation: A channel adapter error has occurred for channel adapter (**Q1**).

System Action: All sessions using routes over the failing adapter have been terminated, and appropriate recovery actions have been initiated.

Operator Response: Save the system log for problem determination.

Programmer Response:

– Ensure the compatibility of communication controller channel-adapter parameters with the system (NSC address, ESC addresses, select out priority, burst length).
– Note the reference code (**Q2**) and contact the IBM hardware support center.

UAC=11

Explanation: A scanner hardware error has occurred for scanner number **Q1**. Lines whose addresses are in the range **Q2** are inoperative.

System Action: All affected lines are inoperative.

Operator Response:

– Reissue the IML command for the affected scanner from the MOSS console and reactivate the lines from the host.

  See the *IBM 3720/3721 Communication Controller Operator's Guide*
– If the problem persists, save the system log for problem determination.

Programmer Response: Note the reference code (**Q3**) and contact the IBM hardware support center.

UAC=12

Explanation: A scanner hardware error has occurred for scanner number **Q1**. Lines whose addresses are in the range **Q2** are inoperative.

System Action: All affected lines are inoperative.

Operator Response:

– Reissue the IML command for the affected scanner from the MOSS console and reactivate the lines from the host.

  See the *IBM 3720/3721 Communication Controller Operator's Guide*
– Use the MODIFY DUMP,TYPE=CSP command to transfer the scanner dump to the host for later printing.
– If the problem persists, do not transfer the last scanner dump. Save the system log for problem determination.

Programmer Response: Note the reference code (**Q3**) and contact the IBM hardware support center.

UAC=13

Explanation: A control program error or scanner error has occurred for scanner number **Q1**. Lines whose addresses are in the range **Q2** are inoperative.

System Action: All affected lines are inoperative.

Operator Response:

– Reissue the IML command for the affected scanner from the MOSS console and reactivate the lines from the host.

  See the *IBM 3720/3721 Communication Controller Operator's Guide*
– If the problem persists, save the system log for problem determination.

Programmer Response:

– Check the addresses in control program generation. Correct generation in case of error.
– Dump the NCP and analyze the dump.
– If there does not appear to be a software problem, note the reference code (**Q3**) and contact the IBM hardware support center.

UAC=14

Explanation: A control program error or scanner error has occurred for scanner number **Q1**. Lines whose addresses are in the range **Q2** are inoperative.

System Action: All affected lines are inoperative.

Operator Response:

– Reissue the IML command for the affected scanner from the MOSS console and reactivate the lines from the host.

  See the *IBM 3720/3721 Communication Controller Operator's Guide*

– Use the MODIFY DUMP,TYPE=CSP command to transfer the scanner dump to the host for later printing.

– If the problem persists, do not transfer the last scanner dump. Save the system log for problem determination.

Programmer Response:

– Dump the NCP and analyze the dump.

– If the problem does not appear to be a software problem, note the reference code (**Q3**) and contact the IBM hardware support center.

UAC=15

Explanation: A line error has occurred for line address **Q2** on scanner number **Q1**.

System Action: The line is inoperative.

Operator Response:

– Reactivate the line from the host.

– If the problem persists, save the system log for problem determination.

Programmer Response:

– According to the reference code (**Q3**), perform line problem determination with 3720 maintenance and operator subsystem (MOSS) facilities.

  See the *IBM 3720/3721 Communication Controller Problem Determination Guide*

– If the problem does not appear to be a software problem, note the reference code (**Q3**) and contact the IBM hardware support center.

UAC=16

Explanation: Re-execution of an automatic-scanner IML is in progress following a hardware error on scanner **Q1**. Lines whose addresses are in the range **Q2** are inoperative.

System Action: All affected lines are inoperative.

Operator Response: Wait for the re-execution of the automatic-scanner IML to complete. Another alert will indicate the IML completion. No action is required.

UAC=17

Explanation: Reexecution of an automatic-scanner IML is in progress following a control program error on scanner **Q1**. Lines in the range **Q2** are inoperative.

System Action: All affected lines are inoperative.

Operator Response: Wait for the re-execution of the automatic-scanner IML to complete. Another alert will indicate the IML completion. No action is required.

UAC=18

Explanation: Re-execution of an automatic-scanner IML is complete following a scanner hardware error on scanner **Q1**. Lines whose addresses are in the range **Q2** are inoperative.

System Action: All affected lines are inoperative.

Operator Response:

– Reactivate the lines from the host.

– If the problem persists, save the system log for problem determination.

Programmer Response: Note the reference code (**Q3**) and contact the IBM hardware support center.

UAC=19

Explanation: Reexecution of an automatic-scanner IML is complete following a control program error or scanner error on scanner **Q1**. Lines whose addresses are in the range **Q2** are inoperative.

System Action: All affected lines are inoperative.

Operator Response:

– Use the MODIFY DUMP,TYPE=CSP command to transfer the scanner dump to the host for later printing.
– Reactivate the lines from the host.
– If the problem persists, do not transfer the last scanner dump. Save the system log for problem determination.

Programmer Response:

– Take an NCP dump (MODIFY DUMP,TYPE=NCP command) at the time of the re-execution of the scanner IML and analyze the dump.
– If the problem does not appear to be a software problem, note the reference code (**Q3**) and contact the IBM hardware support center.

UAC=20

Explanation: A permanent hardware error has occurred for scanner **Q1**. Scanner re-execution of the IML has stopped. Lines whose addresses are in the range **Q2** are inoperative.

System Action: All affected lines are inoperative.

Operator Response: Save the system log for problem determination.

Programmer Response: Note the reference code (**Q3**) and contact the IBM hardware support center.

UAC=21

Explanation: A permanent control program error or scanner error has occurred for scanner **Q1**. Reexecution of the scanner IML stopped. Lines whose addresses are in the range **Q2** are inoperative.

System Action: All affected lines are inoperative.

Operator Response: Save the system log for problem determination.

Programmer Response:

– Dump the NCP and analyze the dump.
– If the problem does not appear to be a software problem, note the reference code (**Q3**) and contact the IBM hardware support center.

UAC=22

Explanation: Reexecution of the automatic-scanner IML failed because of a hardware error on scanner **Q1**. Lines whose addresses are in the range **Q2** are inoperative.

System Action: All affected lines are inoperative.

Operator Response: Save the system log for problem determination.

Programmer Response: Note the reference code (**Q3**) and contact the IBM hardware support center.

UAC=23

Explanation: Re-execution of the automatic-scanner IML failed because of a control program or scanner hardware error on scanner **Q1**. Lines whose addresses are in the range **Q2** are inoperative.

System Action: All affected lines are inoperative.

Operator Response: Save the system log for problem determination.

Programmer Response:

– Dump the NCP and analyze the dump.
– If the problem does not appear to be a software problem, note the reference code (**Q3**) and contact the IBM hardware support center.

UAC=24

Explanation: Re-execution of the automatic-scanner IML failed because of a hardware error or maintenance and operator subsystem (MOSS) error for scanner **Q1**. Lines whose addresses are in the range **Q2** are inoperative.

System Action: All affected lines are inoperative.

Operator Response: Save the system log for problem determination.

Programmer Response: Note the reference code (**Q3**) and contact the IBM hardware support center.

UAC=25

Explanation: A maintenance and operator subsystem (MOSS) remote-console error occurred because of the line, modems, console or MOSS.

System Action: Processing continues.

Operator Response: Save the system log for problem determination.

Programmer Response:

– Verify that the remote console, remote modem or local modem is powered on.
– Verify the physical installation for the remote console, remote modem, local modem and cables.
  See the *IBM 3720/3721 Communication Controller Problem Determination Guide*.
– Run modem tests. See the modem documentation.
– Run a console test. See the console documentation.
– Run a console link test from the 3720 operator panel.
  See *IBM 3720/3721 Communication Controller Daily Task and Problem Determination*
– If no problem appears, note the reference code (**Q1**) and contact the IBM hardware support center.

UAC=26

Explanation: A maintenance and operator subsystem (MOSS) remote-console error has occurred.

System Action: Processing continues.

Operator Response: Save the system log for problem determination.

Programmer Response:

– Verify that the remote console operates in IBM 3101 mode.
  See *IBM 3720/3721 Communication Controller System Integration*
– Run a console test. See the console documentation.
– If no problem appears, note the reference code (**Q1**) and contact the IBM hardware support center.

UAC=27

Explanation: An error occurred on the maintenance and operator subsystem (MOSS) disk or MOSS disk adapter.

System Action: Processing continues.

Operator Response: Save the system log for problem determination.

Programmer Response:

– An IPL can be executed for the communication controller with the primary diskette on which the disk has been saved.
  See the *IBM 3720/3721 Communication Controller Problem Determination Guide*
– Note the reference code (**Q1**) and contact the IBM hardware support center.

UAC=30

Explanation: An error occurred on the maintenance and operator subsystem (MOSS) disk or MOSS disk adapter.

System Action: Processing continues.

Operator Response:

– Do not IPL from the 3720 disk, or dump to the disk, until the disk is repaired.
– The IPL can only be done by switching to diskette mode on the control panel and using the primary backup diskette on which the customized disk contents have been saved.
  See the *3720/3721 Communication Controller Operator's Guide*.
– Save the system log for problem determination.

Programmer Response: Note the reference code (**Q1**) and contact the IBM hardware support center.

UAC=31

Explanation: A communication controller hardware error occurred. A communication controller IPL was re-executed.

System Action: Processing continues.

Operator Response:

– Reactivate the lines from the host.

– Use the MODIFY DUMP,TYPE=NCP,OPTION=TRANS command to transfer the communication controller dump to the host, then purge it from the 3720 disk.
– If the problem persists, save the system log for problem determination.

Programmer Response: Note the abend code (**Q1**) and the reference code (**Q2**) and contact the IBM hardware support center.

UAC=32

Explanation: A communication controller software error occurred. An IPL has been re-executed for the communication controller.

System Action: Processing continues.

Operator Response:

– Reactivate the lines from the host.
– Transfer the communication controller dump to the host, then purge it from the 3720 disk.

  The dump does not have to be transferred to the host, but it should be purged from the 3720 disk. If the dump is not purged, the AUTODUMP/IPL sequence for a subsequent error will not occur.
– If the problem persists, save the system log for problem determination.

Programmer Response:

– Ensure there is no mismatch between the hardware configuration and the control program generation (NCPCA, CA, HICHAN, LOCHAN). Valid for abend codes 912 and 915. Correct the generation problem, if any.
– Analyze the dump according to the abend code (**Q1**).
– If there does not appear to be a software problem, note the reference code (**Q2**) and contact the IBM hardware support center.

IST773I SESSION WITH *luname* **IN PROCESS OF BEING TERMINATED**

Explanation: VTAM was deactivating a PU in response to a VARY INACT,GIVEBACK command. Sessions could not be transferred from a real resource to a CDRSC during the nondisruptive giveback of *luname*.

System Action: VTAM terminates the session for *luname*.

Operator Response: None.

Programmer Response: None.

IST778I *cdrmname1* **[***cdrmname2***] [***cdrmname3***] [***cdrmname4***] [***cdrmname5***] [***cdrmname6***]**

Explanation: VTAM issues this message as part of a message group. The first message in the group is IST728I. See the explanation of that message for a complete description.

IST784I SESSION(S) EXIST(S) WITH UNKNOWN PARTNER(S)

Explanation: VTAM issues this message in response to a DISPLAY ID command for a logical unit. It indicates that one or more sessions exist for which the SSCP has no session partner information (for example, partner name or session ID). This information was lost when the SSCP-LU session ended. When the SSCP-LU session is re-established, the SSCP becomes aware of any LU-LU sessions that remained active.

System Action: Processing continues.

Operator Response: None.

Programmer Response: None.

IST786I *command* **COMMAND REJECTED —** *reason*

Explanation: VTAM rejects the *command* for one of the following *reason*s:

EXCEEDS *limit* **CHARACTER LIMIT**

The *command* exceeded the maximum allowable length *limit*. The command length should be less than or equal to the limit *limit*. The permissible command length will be smaller if PPOLOG=YES is in effect.

NO COMMAND OPERANDS
The *command*'s input command length (after removing the command prefix) was 0.

CMIP SERVICES ALREADY ACTIVE
The MODIFY VTAMOPTS command for CMIP services has been issued and CMIP services has already been started.

System Action: VTAM rejects the command.

Operator Response:

- If *reason* is **EXCEEDS** *limit* **CHARACTER LIMIT**, shorten the command to be less than or equal to *limit* and reenter it.
- If *reason* is **NO COMMAND OPERANDS**, reenter *command* with the required operands.
- If *reason* is **CMIP SERVICES ALREADY ACTIVE**, and CMIP services is deactivating, wait until one of the following messages is displayed indicating that deactivation is complete.
  – IST1396I
  – IST1397I
  – IST1398I
  – IST1331I

  Reissue the MODIFY VTAMOPTS,OSIMGMT=YES command.

Programmer Response: None.

IST787I SSCP TAKEOVER FOR NODE *linkname* **IN PROGRESS**

Explanation: Switched link *linkname* has been activated in the taking-over SSCP during nondisruptive takeover.

System Action: None.

Operator Response: None.

Programmer Response: None.

IST789I *command* **FAILED FOR ID =** *ncpname***, CA / NCP CONFLICT**

Explanation: The *command* (VARY ACT or VARY ACQ) failed because an NCP was contacted over a communication adapter SDLC link station. (VTAM can contact an NCP over a communication adapter SDLC link or activate of NCP over a channel or noncommunication adapter SDLC link, but not both at the same time.)

System Action: VTAM stops processing *command*.

Operator Response: Enter the DISPLAY ID=*ncpname* command to determine which communication adapter link stations are in contact with the NCP *ncpname*.

Programmer Response: If you want NCP *ncpname* activated or acquired by this host, ask the operator to deactivate the communication adapter SDLC link stations in contact with this NCP. Then the operator may reenter the VARY ACT or VARY ACQ command for NCP *ncpname*.

IST790I MAXIMUM *type* **USED =** *max***K**

Explanation: This message is part of a group of messages that VTAM issues in response to a DISPLAY BFRUSE command. The first message in the group is IST449I. See the explanation of that message for a full description.

IST792I NO SUCH SESSION EXISTS

Explanation: The operator issued a VARY TERM command for a session that does not exist. For example, if the command is entered for a logical unit that has only a pending active session, no session is found (or terminated) since the default scope of this command is active sessions. Note that no sessions exist for the specified LU or session partners from the VARY TERM command.

System Action: None.

Operator Response: Enter DISPLAY NET,SESSIONS,SCOPE=ALL to verify that sessions exist and check session states.

IST793E

Reenter the VARY TERM command.

Programmer Response: None.

Note: If you modify this message, you must specify MSG=(IST792I,6) on the USSMSG macro. This will define IST792I and USS message 6 to be identical in the operation-level USS table. See the *z/OS Communications Server: SNA Resource Definition Reference* for information on the USSMSG macro for VTAM operator messages.

IST793E SESSION MANAGEMENT ERROR, CODE *code* **[—***response***]**

Explanation: The session management exit routine, ISTEXCAA, returned data that was not valid or a return code in register 15 that was not valid. The following *code*s describe the error conditions which might occur.

code **(in Hex)**
Error

01 For the gateway path selection function (primary function code X'04'), a gateway path entry in the original list did not match any entry in the list.

For the SSCP selection function (primary function code X'06'), an SSCP entry in the returned list did not match any in the default list.

code is undefined for the adjacent link station (ALS) selection function (primary function code X'08').

03 For the gateway path selection function (primary function code X'04'), there were no valid gateway path entries in the returned list.

For the SSCP selection function (primary function code X'06'), there were no valid SSCP selection entries in the returned list.

For the adjacent link station (ALS) selection function (primary function code X'08'), the name returned in the ALS name vector is not the name of a valid PU.

04 For the gateway path selection function (primary function code X'04'), the network of the adjacent SSCP was incorrect in the returned list.

code is undefined for the SSCP selection function (primary function code X'06').

code is undefined for the adjacent link station (ALS) selection function (primary function code X'08').

05 For the gateway path selection function (primary function code X'04'), there were more gateway path entries in the returned list than in the original list.

For the SSCP selection function (primary function code X'06'), there were more SSCP selection entries in the returned list than in the passed list.

code is undefined for the adjacent link station (ALS) selection function (primary function code X'08').

06 For the gateway path selection function (primary function code X'04'), the exit routine generated a return code that is not valid.

code is undefined for the SSCP selection function (primary function code X'06').

For the adjacent link station (ALS) selection function (primary function code X'08'), the exit routine generated a return code that is not 0, 4, 8, 12, 16, or 20.

07 For the gateway path selection function (primary function code X'04'), the exit routine changed the pointer to the gateway path list.

For the SSCP selection function (primary function code X'06'), the exit routine changed the pointer to the SSCP selection list.

For the adjacent link station (ALS) selection function (primary function code X'08'), the exit routine changed the pointer to the ALS name information vector.

08 For the initial authorization function (primary function code X'00'), the exit routine returned an return code that is not valid. Note that a return code of 4 is not valid if the exit does not support the secondary authorization function.

09 For the secondary authorization function (primary function code X'01'), the exit routine returned a return code that is not valid.

10 For the initial or final accounting function (primary function codes X'02' or X'03'), the exit routine returned a return code that is not valid.

11 For the end function (primary function code X'FF'), the exit routine returned a return code that is not valid.

12 For the begin function (primary function code X'FE'), the exit routine returned a return code that is not valid.

14 For any function, the session management exit routine abended.

15 The following installation exit routines could not be invoked because insufficient storage existed for the parameter lists passed to the exit routines when VTAM was initialized:
- Session management exit routine
- Session accounting exit routine
- Session authorization exit routine.

16 The session management exit routine will never be requested because insufficient below-the-line storage existed during VTAM initialization.

VTAM was unable to obtain 24-bit addressable storage for the gateway path list.

17 For the alias selection function (primary function code X'07'), the exit routine returned a return code that is not valid.

18 The alias selection function (primary function code X'07') will not be enabled because there is not enough storage available to pass the alias parameter list, which is needed to pass information to the session management exit routine.

19 For the alias selection function (primary function code X'07'), the network ID had to be determined. The required network ID has been omitted in the return parameter list.

20 For the alias selection function (primary function code X'07'), a network ID was returned that was not the same as the network ID sent.

21 For the alias selection function (primary function code X'07'), the original data sent for translation has been altered in the input parameter list. This is not allowed.

22 The information for the alias selection function (primary function code X'07') contains a syntax error.

23 The information for the virtual route selection function (primary function code X'0B') contains a syntax error.

response is one of the following:

DEFAULT ALS LIST USED
This is issued for the adjacent link station selection function.

STANDARD GW PATHLIST USED
This is issued for a gateway node.

STANDARD SSCP ROUTING USED
This is issued for the SSCP selection function.

STANDARD VR/TP LIST USED
This is issued for the virtual route selection function.

System Action: The system action depends on *code*. See the following list.

code **(in Hex)**
Action

01–07 *response* is **STANDARD GW PATHLIST USED** for a gateway node (primary function code X'04'); processing continues. VTAM uses the default gateway node path list as determined by the gateway path operand on the CDRM macro.

response is **STANDARD SSCP ROUTING USED** for the SSCP selection function (primary function code X'06'); VTAM uses standard SSCP routing.

response is **DEFAULT ALS ROUTING USED** for the adjacent link station (ALS) selection function (primary function code X'08'). The first available PU in the ALS list is used. If no PUs in the ALS list are available, cross-domain routing is used.

08–09 The session is not authorized by VTAM.

10–11 VTAM ignores the return code.

12 Processing continues as though no exit routine existed. The exit routine will not be invoked again. All sessions are authorized, accounting data is discarded, the default gateway path list is used for gateway path selection, the default SSCP selection list is used for SSCP routing, and the alias application is invoked for translation.

14–16 The session management exit routine is functionally disabled and the function for which it was called is rejected.

17 The session continues as if the alias selection function did not exist. Reevaluate the alias selection function to determine the error and provide the correct return code.

18 VTAM initialization continues and the alias selection function is disabled. (The alias selection function will not be performed.)

19 The information from the alias selection function is not used because the translation that was given is not valid. The session setup fails. Ensure that a network ID is returned if it was not known before the alias selection function is invoked.

20 The data returned from the alias selection function is not used. A network ID was returned that is not valid. The session setup fails. Correct the bad translation.

21 The data returned from the alias selection function will not be used. The session setup fails. Storage that was reserved for input only is being accessed. See the *z/OS Communications Server: SNA Customization* for more information.

22 The data returned from the alias selection function will not be used because it was syntactically incorrect. The session will fail to set up. Check the returned data to ensure that all names have the correct syntax, determine if blank names are valid for each value, and make sure all values are padded with blanks.

23 The data returned from the virtual route selection function will not be used because it was syntactically incorrect. The session will be set up with the VR/TP list defined in the COS table. Valid VR and TP numbers must be used, and the maximum number of VR/TP pairs cannot be exceeded. See the *z/OS Communications Server: SNA Resource Definition Reference* for more information about coding the COS table.

Operator Response: Save the system log for problem determination.

Programmer Response: The session management exit routine contains an error. Use the error code in the message to determine the cause of the error and correct it. You can replace the exit routine with the corrected version by using the MODIFY EXIT command. See the *z/OS Communications Server: SNA Operation* for additional information.

IST796I HOSTSA VALUE EXCEEDS *option*

Explanation: VTAM issues this message when the value specified for the HOSTSA start option exceeds the value of *option*.

option is the start option name and is either **MAXSUBA** or **MXSUBNUM**.

- **MAXSUBA** is the highest subarea value that can be assigned to any node in this network that communicates with pre-ENA nodes.

  This message requires no action if your network supports extended network architecture (ENA). ENA was implemented in VTAM Version 3 and NCP Version 4.
- **MXSUBNUM** is the maximum subarea number supported by another network to which this host is connected. Therefore, if your host subarea number is greater than MXSUBNUM, you cannot communicate with the other network.

System Action:

- If *option* is **MAXSUBA**, processing continues.
- If *option* is **MXSUBNUM**, VTAM issues message IST1311A to prompt for valid values of HOSTSA and MXSUBNUM, and waits for a response.

Operator Response:

- If *option* is **MAXSUBA**, this message requires no action if your network supports extended network architecture (ENA). If your network contains pre-ENA nodes, save the system log for problem determination.
- If *option* is **MXSUBNUM**, enter valid values for HOSTSA and MXSUBNUM when prompted by IST1311A.

  You do not have to enter both values. VTAM does not ignore the value of HOSTSA. However, you may enter a new value of HOSTSA that is smaller than the initial value of MXSUBNUM.

  Message IST1311A is repeated until HOSTSA's value does not exceed MXSUBNUM.

Programmer Response: If *option* is **MAXSUBA**, review the VTAM start options and their relationships. To communicate with pre-ENA nodes, the maximum HOSTSA value cannot exceed the MAXSUBA value.

See the *z/OS Communications Server: SNA Resource Definition Reference* for more information on the MAXSUBA and MXSUBNUM start options.

IST797I FROM VIA ADJACENT DEST ER LENGTH

Explanation: VTAM issues this message as part of a group of messages. The first message in the group is IST533I. See the explanation of that message for a full description.

IST798I *netid*

Explanation: VTAM issues this message as part of a group of messages. The first message is IST533I. See explanation of that message for a full description.

IST799I *type procedure* **IN PROGRESS**

Explanation: VTAM issues this message in response to a DISPLAY ID command requesting the status of an NCP.

procedure is either **LOAD** or **DUMP**.

If *procedure* is **LOAD**, the value of *type* will be **NONDISRUPTIVE**. A nondisruptive load is in progress because a MODIFY LOAD,ACTION=ADD or MODIFY LOAD,ACTION=REPLACE command was entered for an NCP and the operation is not yet complete.

If *procedure* is **DUMP**, *type* can be one of the following:

type	**Description**
DYNA	A dynamic dump of NCP storage is in progress. The NCP remains active.
MOSS	The maintenance operator subsystem dump contained on the MOSS disk in the 3725 or 3745 Communication Controller is being transferred to the host and stored in a host data set.
CSP	The communication-scanner processor (CSP) dump contained on the MOSS disk is being transferred to the host and stored in a host data set.
TRANSFER OF NCP	The NCP is being dumped to its external disk storage and then transferred to a host data set.
PURGE OF MOSS	The maintenance operator subsystem dump is being purged from the MOSS disk in the 3725 or 3745 Communication Controller.
PURGE OF CSP	The communication-scanner processor dump is being purged from the MOSS disk in the 3725 or 3745 Communication Controller.
PURGE OF NCP	The NCP is being purged from the NCP's external disk storage.

System Action: Processing continues.

Operator Response: None.

Programmer Response: None.

Chapter 7. IST messages for VTAM network operators IST800I – IST1199I

This chapter lists the VTAM messages beginning with IST in the range of IST800I through IST1199I. These messages can appear on a network operator's console.

See Appendix E, "Message text for VTAM operator messages" on page 769 for a list of the text of all VTAM operator messages.

Note: Messages that begin with the prefix **ISTF** are issued by the VTAM dump analysis tool and the VTAM internal trace (VIT) analysis tool. Help information is available as a part of each tool by pressing F1. Therefore, **ISTF** messages are not documented in *z/OS Communications Server: SNA Messages*. See *z/OS Communications Server: SNA Diagnosis Vol 1, Techniques and Procedures* for additional information.

IST803I VTAM TERMINATION TASK TERMINATED-OPEN FAILED

Explanation: Because the ACB for the VTAM termination subtask ISTATM00 could not be opened successfully, the VTAM termination subtask could not be initialized.

System Action: If the user's application program abnormally terminates or terminates without issuing a CLOSE ACB, VTAM cannot close that application's ACB. Since VTAM cannot terminate until all application programs have closed their ACB, VTAM could probably never terminate when a HALT command is entered. Other VTAM processing continues.

Operator Response: Halt VTAM immediately. If a dump was taken as indicated by message IST413I, print the dump. Save the system log and network logs for problem determination.

Programmer Response: See *z/OS Communications Server: SNA Diagnosis Vol 1, Techniques and Procedures* for more information on termination problems.

IST804I CLOSE IN PROGRESS FOR *applname* **OPENED BY {***jobname*

Explanation: VTAM is closing the ACB of VTAM application program *applname* that has terminated normally or abnormally and that was opened by *jobname*.

jobname is the name of a related program commonly executed by a series of steps within a job. If *jobname* is not known, ***NA*** is displayed.

System Action: VTAM closes the ACB of the VTAM application program. The application program may terminate before its resources are freed in VTAM.

Operator Response: Since the ACB for the application program cannot be successfully opened again before it is successfully closed, the job must not be restarted before message IST805I is issued to indicate that the close has been completed. If you do not see message IST805I, save the system log for problem determination.

Programmer Response: Determine why the close did not complete and correct the problem. See *z/OS Communications Server: SNA Diagnosis Vol 1, Techniques and Procedures* for more information on diagnosing application program problems.

IST805I VTAM CLOSE COMPLETE FOR *applname*

Explanation: VTAM has successfully completed processing to close the ACB of VTAM application program *applname*.

System Action: Processing continues. VTAM resources can no longer start a session with application program *applname*.

Operator Response: None.

Programmer Response: None.

© Copyright IBM Corp. 1984, 2002

IST807I *command* **FOR ID =** *puname* **FAILED — NODE IS IN TEST MODE**

Explanation: The *command* failed because a MODIFY LL2 command is being processed for PU *puname*, which is being added or moved by dynamic reconfiguration.

System Action: VTAM stops processing the command.

Operator Response:

- If MODIFY LL2,OPTION=CONT was specified, enter MODIFY LL2,OPTION=CANCEL and reenter *command*.
- Otherwise, wait for the MODIFY LL2 command to complete, and reenter *command*.

Programmer Response: If a MODIFY LL2,OPTION=CONT command caused VTAM to issue this message terminate the command by issuing MODIFY LL2,OPTION=CANCEL.

IST808I **ORIGIN PU =** *originpu* **DEST PU =** *destpu* **NETID =** *netid*

Explanation: VTAM issues this message as part of a group of messages. The first message of the group is IST535I. See the explanation of that message for a complete description.

IST809I **XRF SESSIONS — PRIMARY =** *primarycount* **BACKUP =** *backupcount*

Explanation: VTAM issues this message in response to a DISPLAY ID command. *primarycount* is the current count of primary extended recovery facility (XRF) sessions, and *backupcount* is the current count of backup XRF sessions established with this node. This message appears only if the logical unit displayed has at least one primary or backup XRF session. The *primarycount* and *backupcount* values both include sessions with unknown partners.

System Action: Processing continues.

Operator Response: None.

Programmer Response: None.

IST812I *command* **COMMAND NOT ACCEPTED**

Explanation: VTAM did not accept the *command* because of one of the following:

- VTAM is abending
- VTAM is not active
- VTAM is not accepting commands, for example, during processing of HALT
- *command* exceeds the maximum command length.

System Action: VTAM ignores the command and processing continues.

Operator Response: None.

Programmer Response: None.

IST813I **USERVAR** *uservar* **CHANGED FROM** *value1* **TO** *value2*

Explanation: This message is part of a group of messages that VTAM issues when a MODIFY USERVAR command is used to change the value of a USERVAR. The first message in the group is IST1283I. See that message for a complete description of the group.

Note: This message is percolated. See “Message rerouting and percolation” on page 710 for additional information.

IST814I **USERVAR** *uservar* **DELETED**

Explanation: The USERVAR *uservar* was deleted by a MODIFY USERVAR command. Any attempt to start a session by specifying *uservar* will fail.

Note: This message is percolated. See “Message rerouting and percolation” on page 710 for additional information.

System Action: Processing continues.

Operator Response: None.

Programmer Response: None.

IST815I AUTOMATIC RECOVERY IS SUPPORTED

Explanation: VTAM issues this message in response to a DISPLAY ID command for a cross-domain resource manager (CDRM) when automatic recovery (RECOVERY=YES) is specified on the CDRM definition statement. The CDRM will automatically attempt a recovery of the SSCP-SSCP session if an outage occurs.

System Action: Processing continues.

Operator Response: None.

Programmer Response: None.

IST816I *rejsubarea tg2 rejadjsubarea ermask*

Explanation: VTAM issues this message as part of a message group. The first message in the group is IST533I. See the explanation of that message for a full description.

IST819I CDRM *cdrmname* **COMMUNICATION LOST — RECOVERY IN PROGRESS**

Explanation: The SSCP-SSCP session with CDRM *cdrmname* has been disrupted.

System Action: Because the CDRM definition statement for this host, *cdrmname*, or both CDRMs specified RECOVERY=YES, VTAM will try to re-establish the SSCP-SSCP session.

Operator Response: None.

Programmer Response: None.

IST820I {ACTLU|ACTPU} RSP DATA DISCARDED FOR ID = *nodename* **— INSUFF STORAGE**

Explanation: VTAM did not have sufficient storage to receive the response data included on ACTLU or ACTPU sent by node *nodename*. The data was discarded.

System Action: Node *nodename* is deactivated.

Operator Response: Enter a DISPLAY BFRUSE or DISPLAY STORUSE command to check the availability of storage. Wait and retry the activation of *nodename* when storage is available.

If the problem persists, save the system log and dump for problem determination.

Programmer Response: Verify that the operator entered the buffer pool or CSA start options as specified in the start procedures.

Increase storage as required. For insufficient storage errors, you might want to redefine your buffer pool or CSA limits. If the start option cannot be modified using the MODIFY VTAMOPTS command, you must modify the VTAM start options file (ATCSTRxx) and restart VTAM to use the start option.

- See the *z/OS Communications Server: SNA Migration* to determine the storage requirements for VTAM.
- See the *z/OS Communications Server: SNA Resource Definition Reference* for a description of VTAM start options.
- See the *z/OS Communications Server: SNA Operation* for information about the DISPLAY BFRUSE Command, the DISPLAY STORUSE Command, and the MODIFY VTAMOPTS Command.
- See the *z/OS Communications Server: SNA Network Implementation Guide* for an explanation and description of buffer pools and for general information on buffer pool specification and allocation.
- See the *z/OS Communications Server: SNA Diagnosis Vol 2, FFST Dumps and the VIT* for information about analyzing dumps and about analyzing storage using the VIT analysis tool, if external trace is active.

IST821I SUBTASK *subtask* **TERMINATED, COMPLETION CODE** *code*

Explanation: This message indicates that subtask *subtask*, started via a MODIFY SUBTASK command, has completed with code *code*. The value of *code* is returned in register 15 by *subtask*.

System Action: Processing continues.

Operator Response: None.

Programmer Response: None.

IST822I CDRM *cdrmname* RECOVERY FAILED – INSUFFICIENT STORAGE

Explanation: VTAM issues this message when an attempt to re-establish the SSCP-SSCP session with *cdrmname* failed because of a lack of available storage.

System Action: VTAM tries to re-establish the SSCP-SSCP session because the CDRM definition statement for this host, *cdrmname*, or both CDRMs specified RECOVERY=YES. However, VTAM could not re-establish the SSCP-SSCP session because there was not enough storage to process the request.

Operator Response: Enter a DISPLAY BFRUSE command to check the availability of storage. Enter the DISPLAY STORUSE command to display storage usage for storage pools. Save the system log and dump for problem determination.

Programmer Response: Increase storage as required. For insufficient storage errors, you might want to redefine your buffer pool or CSA limits. If the start option cannot be modified using the MODIFY VTAMOPTS command, you must modify the VTAM start options file (ATCSTRxx) and restart VTAM to use the start option.

- See the *z/OS Communications Server: SNA Resource Definition Reference* for a description of VTAM start options.
- See the *z/OS Communications Server: SNA Operation* for information about the DISPLAY BFRUSE Command, the DISPLAY STORUSE Command, and the MODIFY VTAMOPTS Command.
- See the *z/OS Communications Server: SNA Network Implementation Guide* for an explanation and description of buffer pools and for general information on buffer pool specification and allocation.
- See the *z/OS Communications Server: SNA Diagnosis Vol 2, FFST Dumps and the VIT* for information about analyzing dumps and about analyzing storage using the VIT analysis tool, if external trace is active.

IST825I USERVAR DEFINED — NAME = *uservar*, VALUE = *value*

Explanation: This message is the first in a group of messages that VTAM issues when a MODIFY USERVAR command is used to define a USERVAR. A complete description of the message group follows.

```
 IST825I  USERVAR DEFINED – NAME = uservar, VALUE = value
[IST1030I USERVAR EXIT IS exitname]
 IST314I  END
```

Note: This message group is percolated. See “Message rerouting and percolation” on page 710 for additional information.

IST825I

uservar is the name of the USERVAR, and the value of *uservar* has been initialized to *value*. Any subsequent session requests to *uservar* are routed to the application named in *value*.

IST1030I

exitname is the name of the USERVAR exit. If no USERVAR exit is defined, VTAM does not issue this message.

System Action: Processing continues.

Operator Response: None.

Programmer Response: None.

IST826I VTAM START REJECTED– START COMMAND NOT USED FOR VTAM INITIALIZATION

Explanation: Something other than a START command was entered to initialize VTAM. For example, a batch JCL or TSO submit might have been used.

System Action: VTAM initialization is rejected.

Operator Response: Enter a START command to start VTAM successfully.

Programmer Response: Use only the START command to start VTAM successfully.

IST830I **ORIGINATING SSCP NAME =** *sscpname*, **NETID =** *netid*

Explanation: This message is part of a message group. The first message in the group is IST732I. See the explanation of that message for a complete description.

IST831I **DUPLICATE ADJCDRM NAME** *adjcdrmname* **IN** *configname*

Explanation: This message is the first in a group of messages. A full description of possible message groups follows.

A duplicate label *adjcdrmname* was found on two ADJCDRM statements within a series of consecutive ADJCDRM statements in adjacent SSCP table definition *configname*. Messages IST708I and IST1333I identify the affected adjacent SSCP table within *configname*.

- If an adjacent SSCP table is activated with entries identified with CDRM or NETID definition statements, the following message group is displayed.

```
IST831I  DUPLICATE ADJCDRM NAME adjcdrmname IN configname
IST708I  {[NETID = netid][NETWORK = macrolabel][CDRM = sscpname|DEFAULT TABLE]}|
         DEFAULT TABLE FOR ALL NETWORKS
```

- If an adjacent SSCP table is activated with entries identified with an ADJLIST definition statement, the following message group is displayed.

```
IST831I  DUPLICATE ADJCDRM NAME adjcdrmname IN configname
IST1333I ADJLIST = listname
```

IST708I

netid comes from the NETID value specified on the NETWORK statement preceding the series of ADJCDRM statements. If a NETID value is not specified on the NETWORK statement or if there is no NETWORK statement preceding the series of ADJCDRM statements, NETID=*netid* will not appear in message IST708I.

macrolabel is the label of the NETWORK definition statement preceding the series of ADJCDRM statements. If the NETWORK statement does not have a label or if no NETWORK statement precedes the series of ADJCDRM statements, **NETWORK =** *macrolabel* will not appear in message IST708I.

sscpname is the label of the CDRM statement immediately preceding the series of ADJCDRM statements. (Note that a CDRM statement must have a label.) If no CDRM statement immediately precedes the series of ADJCDRM statements, **CDRM =** *sscpname* will not appear in the message. Instead, **DEFAULT TABLE** will appear, indicating that the series of ADJCDRM statements is the default ADJSSCP table for the *netid* specified (or the default ADJSSCP table for all networks if **NETID =** *netid* does not appear).

VTAM issues **DEFAULT TABLE FOR ALL NETWORKS** when the table being activated has a default adjacent SSCP list for all networks.

IST831I

adjcdrmname is the duplicate label which was found on two ADJCDRM statements.

configname identifies the adjacent SSCP table definition.

IST1333I

listname is the name of an adjacent SSCP table as defined by an ADJLIST definition statement.

See the descriptions of the ADJLIST definition statement in the *z/OS Communications Server: SNA Resource Definition Reference* for more information on adjacent SSCP tables.

System Action: VTAM ignores the duplicate ADJCDRM statement. Processing of the ADJSSCP definition continues.

Operator Response: Save the system log for problem determination.

Programmer Response: Remove the duplicate ADJCDRM statement.

IST832I **UNLABELED** *statement_type* **STMT IN** *configname*

Explanation: This message is the first of a group of messages. A full description of the message group follows.

```
IST832I  UNLABELED statement_type STMT IN configname
IST833I  SKIPPING TO NEXT text
```

statement_type identifies the unlabeled statement that was found in *configname*. Values for *statement_type* can be **ADJCDRM, CDRM**, or **ADJLIST**.

text can be:

STMT

CDRM, NETWORK, OR ADJLIST STMT OR EOF

System Action: If an unlabeled CDRM statement was found, that statement and all statements in the ADJSSCP definition following the unlabeled CDRM statement are ignored until a NETWORK statement or CDRM statement or end of file (EOF) is encountered. If a NETWORK statement or CDRM statement is encountered, normal ADJSSCP definition processing resumes with that statement.

If an unlabeled ADJLIST statement was found, that statement is ignored. If this statement was not preceded by a valid ADJLIST statement, then all ADJCDRMs immediately following the unlabeled ADJLIST are also ignored.

If an unlabeled ADJCDRM statement was found, only that statement is ignored. Processing resumes with the following statement, if one exists.

Operator Response: Save the system log for problem determination.

Programmer Response: Put labels on all CDRM, ADJCDRM, and ADJLIST statements in adjacent SSCP table definitions.

IST833I {NCPPATH STMT, VPATH STMT, OR EOF| SKIPPING TO NEXT *text***}**

Explanation: VTAM issues this message when it detects a syntax error during the processing of a dynamic path update deck. Dynamic path update processing will resume with the next NCPPATH or VPATH statement.

VTAM displays **NCPPATH STMT, VPATH STMT, OR EOF** for one of the following reasons:
- A NCPPATH or VPATH is unlabeled
- NETID is missing in an NCPPATH or VPATH statement.

VTAM displays **SKIPPING TO NEXT** *text* when IST833I is preceded by either message IST832I or IST1335I. See the explanation of those messages for a complete description.

System Action: Processing continues.

Operator Response: None.

Programmer Response: Correct the dynamic path update deck.

IST834I *num* **BACKUP SESSION(S) EXIST(S) WITH UNKNOWN PARTNERS**

Explanation: VTAM issues this message in response to a DISPLAY ID command. *num* is the number of backup extended recovery facility (XRF) sessions whose session partner is unknown.

System Action: Processing continues.

Operator Response: None.

Programmer Response: None.

IST838I TRACE STATUS DISPLAY FOR ID = *nodename*

Explanation: This message is the first in a group of messages that VTAM issues in response to a DISPLAY TRACES command for *nodename*. A full description of the message group follows.

```
IST838I  TRACE STATUS DISPLAY FOR ID = nodename
IST839I  PU NAME   LINE NAME
IST840I  puname    linename
⋮
IST314I  END
```

This message group displays a list of resources that are being traced by the 3710 physical unit *node*. IST840I displays the name of the resource, *puname*, and its line, *linename*, and is repeated for each resource being traced.

System Action: Processing continues.

Operator Response: None.

Programmer Response: None.

IST839I PU NAME LINE NAME

Explanation: VTAM issues this message as part of a group of messages and it is a header for message IST840I. See the explanation of message IST838I for a full description.

IST840I *puname linename*

Explanation: VTAM issues this message as part of a group of messages. The first message in the group is IST838I. See the explanation of that message for a full description.

IST841I NO RESOURCES ARE BEING TRACED FOR *nodename*

Explanation: A DISPLAY TRACES command has been entered for a 3710 physical unit *nodename* and there are no resources being traced for that physical unit.

System Action: Processing continues.

Operator Response: None.

Programmer Response: None.

IST842I UNABLE TO FIND BUFFERS IN *poolid* **POOL — DUMP IN PROGRESS**

Explanation: While attempting to allocate storage from buffer pool *poolid*, VTAM found that storage perceived to be free is actually in use.

System Action: A dump is being taken to help identify the source of this problem.

If VTAM can continue, it will discard some existing free buffers in pool *poolid* and schedule the pool for eventual expansion. Otherwise, VTAM must be restarted.

Operator Response: Save the system log and dump for problem determination.

Programmer Response: Use the dump to determine the cause of the problem.

IST844I VTAM START REJECTED — *name* **IS DUPLICATE NAME**

Explanation: VTAM attempted to define a resource during initialization but encountered a duplicate entry, *name*.

System Action: VTAM is terminated.

Operator Response: Verify that the start options were entered correctly, particularly the HOSTPU, NETID, and SSCPNAME options. If not, restart VTAM with the correct options; otherwise, save the system log for problem determination.

Programmer Response: Check for invalid start option values (such as HOSTPU=VTAM) that could lead to duplicate entries, especially with VTAM-reserved resource names. See the *z/OS Communications Server: SNA Resource Definition Reference* for a description of the VTAM start options.

IST849I *operation1* **INCONSISTENT WITH USE OF** *operation2* **IN** *statementname*

Explanation: This message is the first of a group of messages. The message group follows.

```
IST849I  operation1 INCONSISTENT WITH USE OF operation2 IN statementname
IST701I  CONFIG configname LABEL = labelname STMT TYPE = statementname
```

An inconsistent connection has been made between *operation1* and *operation2*. VTAM issues message IST849I for the following combinations of *operation1* and *operation2*:

AUTODL and **SHOLD**
AUTODL=NO is coded in the GROUP or LINE definition statement.

DIALNO and **SHOLD**
DIALNO is not coded in the GROUP definition statement.

CPNAME and **PUTYPE**
CPNAME is coded for a PU type other than PU type 2.

LOADFROM and **SAVEMOD**
LOADFROM=EXT was specified on the VARY ACT command, and SAVEMOD=YES was specified on the PCCU definition statement. This combination is not valid.

RESSCB and **LOCADDR**
RESSCB is specified for a dependent LU.

SAVEMOD and **DUMPLD**
SAVEMOD=NO was specified on the VARY ACT command, and DUMPLD=YES was specified on the PCCU definition statement. This combination is not valid.

SAVEMOD and **LOADFROM**
SAVEMOD=YES was specified on the VARY ACT command, and LOADFROM=EXT was specified on the PCCU definition statement. This combination is not valid.

The definition statement *statementname* is in the node *configname* and has the label *labelname*.

System Action: The system action depends on the value of *operation1* and *operation2*:

AUTODL and **SHOLD**
VTAM does one of the following:

- If AUTODL=NO is coded on the GROUP definition statement, VTAM ignores the entire GROUP definition statement and all definition statements under it.
- If AUTODL=NO is coded on the LINE definition statement, VTAM treats all lines within that group as ordinary X.21 switched lines, and the group is no longer a short hold mode/multiple port sharing (SHM/MPS) group.

DIALNO and **SHOLD**
VTAM ignores the entire GROUP definition statement and all definition statements under it.

CPNAME and **PUTYPE**
PU and subnodes are unavailable.

LOCADDR and **EAS**
VTAM ignores EAS.

LOADFROM and **SAVEMOD**
VTAM does not use SAVEMOD=YES, coded on the PCCU definition statement, during the initial load, but it is saved for future reloads. The automatic dump and load switches are not changed in the NCP.

RESSCB and **LOCADDR**
VTAM ignores RESSCB.

SAVEMOD and **DUMPLD**
VTAM does not use DUMPLD=YES, coded on the PCCU definition statement, during the initial load, but it is saved for future reloads. The automatic dump and load switches are not changed in the NCP.

SAVEMOD and **LOADFROM**
VTAM does not use the LOADFROM=EXT, coded on the PCCU definition statement, during the initial load, but it is saved for future reloads.

Operator Response: Save the system log for problem determination.

Programmer Response: Check and correct the definition statement *statementname*.

IST860I DEACTIVATION OF *nodename* INCOMPLETE — INSUFFICIENT STORAGE

Explanation: VTAM issues this message in response to either a VARY INACT command to deactivate a major or minor node or a termination request that was received. The command cannot be completed because VTAM could not obtain sufficient storage to process the command.

nodename is the name of the resource and is always a CDRM.

System Action: VARY deactivate processing for *nodename* is not completed, and the node is not available to VTAM. LU-LU sessions are not disrupted.

Operator Response: Reenter the VARY INACT command when more storage is available. If VTAM continues to issue this message, enter the DISPLAY BFRUSE command. Enter the DISPLAY STORUSE command to display storage usages for storage pools. Save the system log and request a dump for problem determination.

Programmer Response: Verify that the operator entered the buffer pool or CSA start options as specified in the start procedures.

Increase storage as required. For insufficient storage errors, you might want to redefine your buffer pool or CSA start options. If the start option cannot be modified using the MODIFY VTAMOPTS command, you must modify the VTAM start options file (ATCSTRxx) and restart VTAM to use the start option.

- See the *z/OS Communications Server: SNA Migration* to determine the storage requirements for VTAM.
- See the *z/OS Communications Server: SNA Resource Definition Reference* for a description of VTAM start options.
- See the *z/OS Communications Server: SNA Operation* for information about the DISPLAY BFRUSE Command, the DISPLAY STORUSE Command, and the MODIFY VTAMOPTS Command.
- See the *z/OS Communications Server: SNA Network Implementation Guide* for an explanation and description of buffer pools and for general information on buffer pool specification and allocation.
- See the *z/OS Communications Server: SNA Diagnosis Vol 2, FFST Dumps and the VIT* for information about analyzing dumps and about analyzing storage using the VIT analysis tool, if external trace is active.

IST861I **MODETAB=***modetab* **USSTAB=***usstab* **LOGTAB=***logtab*

Explanation: This message is part of a group of messages that VTAM issues in response to a DISPLAY ID command for an application minor node or an LU. The tables that will be displayed are:

modetab
: Logon mode table

usstab
: Unformatted system services (USS)

logtab
: Interpret table

If no table of the particular type was defined for the resource, or the table type does not apply, for example, interpret tables for applications, ***NA*** is displayed.

If no alternative value was specified when the resource was defined, the following IBM-supplied tables will be used if they are loaded:

Logon mode table
: ISTINCLM

USS table, operators
: ISTINCNO

USS table, terminals
: ISTINCDT

Interpret table
: No default

System Action: Processing continues.

Operator Response: None.

Programmer Response: None.

IST862I **NETID =** *netid* **COSTABLE =** *costable1* **[,** *costable2***]**

Explanation: VTAM issues this message in response to a DISPLAY COS command. It displays the name of the class-of-service (COS) table associated with a specific network and PU type 4. To determine which COS table will be used in subsequent session initiation requests involving this PU type 4, see the *z/OS Communications Server: SNA Network Implementation Guide*.

netid, obtained from the NETID operand, is the name of the network whose class-of-service information is being displayed.

- If NETID is omitted, *netid* is the host network identifier.

- If NETID is not * (NETID=*netid* or NETID=*NETWORK), message IST862I is displayed only if the COSTAB keyword is coded on the BUILD or NETWORK definition statement. If COSTAB is not coded, VTAM issues message IST887I.
- If DISPLAY COS,NETID=* is entered, message IST862I is displayed for each network identified in a BUILD or NETWORK definition statement, and for any dynamic networks that have been created.
- If DISPLAY COS,NETID=*NETWORK is entered, message IST862I displays information for a model network.

costable1 identifies which COS tables may be used during class-of-service resolution. *costable1* will be one of the following:

name The name of the COS table identified using the COSTAB keyword in the BUILD or NETWORK definition statement for network *netid*.

ISTSDCOS
The name of the default COS table. ISTSDCOS is displayed only when it has been loaded and when no COS name was specified on a BUILD or NETWORK definition statement.

ALGORITHM
The default routing algorithm used during COS resolution. ALGORITHM is displayed when a COS name was not specified in a BUILD or NETWORK definition statement, and the default COS table, ISTSDCOS, has not been loaded.

costable2 is present only when *netid* is the same as the host network and the value of *costable* came from the BUILD or NETWORK definition statements. Either *costable1* or *costable2* will be used during session initiation involving the PU type 4, based on the COS resolution algorithm explained in the *z/OS Communications Server: SNA Network Implementation Guide*.

costable2 will be one of the following:

ISTSDCOS
The name of the default COS table.

ALGORITHM
The default routing algorithm. Note that ISTSDCOS cannot be used since it has not been loaded.

System Action: Processing continues.

Operator Response: None.

Programmer Response: None. If there is a need to change the COS table associated with a particular resource, the MODIFY TABLE command should be used. MODIFY TABLE can also be used to load ISTSDCOS.

IST863I MODIFY TABLE COMMAND FAILED–*reason*

Explanation: This message is the first in a group of messages that VTAM issues in response to a MODIFY TABLE command. A complete description of the message group follows.

```
 IST863I  MODIFY TABLE COMMAND FAILED-reason
 IST864I  NEWTAB=newtable, OLDTAB=oldtable, OPT=option,
          TYPE=tabletype
[IST935I ORIGIN=ncpname, NETID=netid, ID=resourcename]
```

The value of *newtable, oldtable, ncpname, netid*, and *resourcename* will be *****NA***** when the following operands are not specified on the command:

newtable
NEWTAB operand

oldtable
OLDTAB operand

ncpname
ORIGIN operand

netid NETID operand

resourcename
ID operand

reason indicates the cause of the failure and can be one of the following:

ABEND DURING TABLE PROCESSING
An abend occurred and the MODIFY TABLE command was not processed.

BOTH FILTER TABLES IN USE
A MODIFY TABLE,TYPE=FILTER,OPTION=LOAD command has been entered, but a previous MODIFY TABLE,TYPE=FILTER has not completed its processing. VTAM cannot execute the MODIFY TABLE,TYPE=FILTER command until the previous command is completed.

CMIP SERVICES IS INACTIVE
CMIP services must be active to issue the MODIFY TABLE,OPTION=LOAD,TYPE=CMIPDDF command.

CURRENT TABLE WILL BE USED
An error was detected when attempting to load the directory definition file using the MODIFY TABLE command. A prior message will indicate the specific failure detected. The current version of the directory definition file will continue to be used by CMIP services security.

ERROR BUILDING TABLE
The table specified by *tabletype* was not successfully built.

INSUFFICIENT STORAGE
Not enough storage was available to process the MODIFY TABLE command.

I/O ERROR LOADING *newtable*
An error was detected with table *newtable* during a load operation.

This message may be received if the table being loaded from VTAMLIB starts in an extent that was known when VTAMLIB was opened, but ends in a new extent that was not known when VTAMLIB was opened. Since VTAMLIB is opened only once during VTAM initialization, the new extent(s) cannot be accessed until VTAM is halted, restarted, and VTAMLIB is opened again. For information on allocating space in the data set or information on extents, see your operating system documentation.

I/O TIMEOUT LOADING *newtable*
An attempt was made to load table *newtable*, but a system or hardware problem has caused the table load facility to time out while waiting for I/O to complete.

LOADER INOPERATIVE
This can occur for one of the following reasons:

- A previous table load never completed
- The VTAM-directed load subtask, ISTINMLS, abnormally ended during a load request
- The VTAM-directed load subtask, ISTINMLS, has not completed its initialization.

name **NOT FOUND**
The resource identified by *name* does not exist. *name* may be the new table name *newtable*, or a node name identified by either the ID (*resourcename*) or ORIGIN (*ncpname*) operands of the MODIFY TABLE command.

If name is *newtable*, this message indicates that the table could not be loaded from storage.

This message may be received if the table being loaded from VTAMLIB is entirely contained in extents that were not known when VTAMLIB was first opened. Since VTAMLIB is opened only once during VTAM initialization, the new extents cannot be accessed until VTAM is halted, restarted, and VTAMLIB is opened again. For information on allocating space in the data set or information on extents, see your operating system documentation.

ncpname **HAS NO COS FOR** *netid*
The *ncpname* NETWORK definition statement for network *netid* did not have a COSTAB keyword. As such, there was no class-of-service table association to delete for this network.

netid **NOT DEFINED FOR** *ncpname*
There was no NETWORK definition statement defining *netid* in the major node definition for PU type 4 *ncpname* or the host is a non-gateway SSCP and the network definition statements are ignored. Therefore, the COS association could not be deleted or changed.

NEW TABLE ALREADY IN USE
For OPTION=LOAD, the table indicated by *newtable* is already in use by another resource. A new version of *newtable* cannot be loaded (to replace the existing version) until all existing references to the old *newtable* table have been deleted.

IST863I

NO APPL/LU/CDRSC BELOW RESOURCE
The major node identified by *resourcename* had no minor nodes. Therefore, there were no associations to change or delete.

OLD TABLE WAS NOT IN USE
An attempt was made to delete or change the association between *oldtable* and the resources identified by *resourcename* in the MODIFY TABLE command or to replace *oldtable* with *newtable*. However, no matches were found with *oldtable* for the specified table type.

OLD & NEW TABLE NAMES IDENTICAL
For the resource specified by *resourcename* and all of its subordinate nodes, the old table name, *oldtable*, and the new table name, *newtable*, were identical. Use MODIFY TABLE,OPTION=LOAD if you want to load a new copy of *oldtable*.

OPERATION INVALID FOR *resourcename*
This can occur for the following reasons:

For TYPE=[USSTAB|LOGTAB|MODETAB|MDLTAB| ASLTAB|FLDTAB]
An attempt was made to modify or delete a table associated with a resource. *resourcename* was specified on the ID parameter. The specified resource was either an invalid resource against which to perform a MODIFY TABLE command or was not eligible for the type of operation requested, for example, TYPE=LOGTAB for an application.

For OPTION=LOAD
An attempt was made to reload old table ISTCFCMM. This table may not be reloaded.

For OPTION=DELETE,TYPE=COSTAB
An attempt was made to delete a COS table association for a resource that was not a PU type 4 or PU type 5, or an attempt was made to delete the association between ISTSDCOS and the host PU.

For OPTION=ASSOCIATE,TYPE=COSTAB
An attempt was made to change a COS table association for a resource that was not a PU type 4 or PU type 5.

TABLE *name* **IS FORMAT=OLD**
Table *name* is a USS table that was assembled using FORMAT=OLD or the table is back-level. A back-level table can be either a USS table or an interpret table that was assembled using pre-VTAM V3R2 macros.

TABLE TYPE CONFLICT
New table *newtable* has a table type that differs from that specified using the TYPE keyword (*tabletype*). For example, *newtable* is a USS table but TYPE=LOGTAB was specified on the MODIFY TABLE command.

IST864I

option is one of the following values:
ASSOCIATE
Change table association with resources
DELETE
Delete table association with resources
LOAD Load or refresh a table, change associations

tabletype is one of the following values. When *tabletype* is not applicable, for example, specifying OPT=LOAD, *****NA***** will be displayed.
ASLTAB
Associated LU table
COSTAB
Class-of-service table
CMIPDDF
CMIP directory definition file
FILTER
Session awareness data filter
FLDTAB
Message flooding table
LOGTAB
Interpret table

MDLTAB
Model name table
MODETAB
Logon mode table
USSTAB
USS table

IST935I

This message contains additional identification information for certain types of tables.

ncpname is the name of the PU type 4 or PU type 5 specified on the ORIGIN operand.

netid identifies the network specified on the NETID operand.

resourcename is the name of the resource specified on the ID operand.

System Action: No table associations were changed except for the following *reason*s:

- If *reason* is **BOTH FILTER TABLES IN USE**, the previous command will complete eventually.
- If *reason* is **LOADER INOPERATIVE**, all subsequent MODIFY TABLE commands that require the loader will fail. If the I/O load operation eventually succeeds, load operations will again be enabled.

Operator Response:

- When *reason* is **ABEND DURING TABLE PROCESSING**, save the system log and dump for problem determination.
- When *reason* is **BOTH FILTER TABLES IN USE**, try the command again when the previous command has completed.
- When *reason* is **CMIP SERVICES IS INACTIVE**, restart CMIP services. The new definitions will be loaded.
- When *reason* is **INSUFFICIENT STORAGE**, reenter the MODIFY TABLE command when more storage is available. If problems persist, enter a DISPLAY BFRUSE command. Enter the DISPLAY STORUSE command to display storage usage for storage pools. Save the system log and request a dump for problem determination.
- For the following values of *reason*, save the system log for problem determination:
  - **CURRENT TABLE WILL BE USED**
  - **ERROR BUILDING TABLE**
  - **I/O ERROR LOADING** *newtable*
  - **I/O TIMEOUT LOADING** *newtable*
  - **LOADER INOPERATIVE**
  - **TABLE** *name* **IS FORMAT=OLD**
- For the following values of *reason*, verify that the MODIFY TABLE operands were entered correctly:
  - *name* **NOT FOUND**
  - *ncpname* **HAS NO COS FOR** *netid*
  - *netid* **NOT DEFINED FOR** *ncpname*
  - **NEW TABLE ALREADY IN USE**
  - **NO APPL/LU/CDRSC BELOW RESOURCE**
  - **OLD TABLE WAS NOT IN USE**
  - **OLD & NEW TABLE NAMES IDENTICAL**
  - **OPERATION INVALID FOR** *resourcename*
  - **TABLE TYPE CONFLICT**

  See *z/OS Communications Server: SNA Operation* for a description of command operands. The DISPLAY COS, DISPLAY ID, and DISPLAY TABLE commands can be used to obtain the current table associations for the specified resources.

Programmer Response:

- When *reason* is **ABEND DURING TABLE PROCESSING** review the contents of the system dump to determine the correct problem determination action. See the *z/OS Communications Server: SNA Diagnosis Vol 1, Techniques and Procedures* for information on the abend procedure.
- When reason is **CURRENT TABLE WILL BE USED**, correct the error indicated by message IST1444I.
- When reason is **ERROR LOADING TABLE**, this message is preceded by message IST979I. See the explanation of that message for additional information.

- When *reason* is **INSUFFICIENT STORAGE**, review the output from the operator to determine the cause of the problem.

  If the MODIFY TABLE operation is critical, have the operator cancel other jobs or deactivate some major nodes in order to free up storage for the command, and then reenter the MODIFY TABLE command.
  - See the *z/OS Communications Server: SNA Operation* for information about the DISPLAY BFRUSE Command, and the DISPLAY STORUSE Command.
  - See the *z/OS Communications Server: SNA Diagnosis Vol 2, FFST Dumps and the VIT* for information about analyzing dumps and about analyzing storage using the VIT analysis tool, if external trace is active.
- When *reason* is **I/O ERROR LOADING** *newtable* or **I/O TIMEOUT LOADING** *newtable*, examine the definition library to make sure the requirements for the VTAM system are correct for your system. Enter a DISPLAY BFRUSE command to determine storage utilization.
- When *reason* is **LOADER INOPERATIVE**, review the contents of the system dump to determine the correct problem determination action. See the *z/OS Communications Server: SNA Diagnosis Vol 1, Techniques and Procedures* for information on the abend procedure.
- When *reason* is **TABLE** *name* **IS FORMAT=OLD**, you need to code FORMAT=DYNAMIC on the USSTAB macro and reassemble the table using the current VTAM macro libraries .
- For all other values of *reason*, no response is required.

IST864I NEWTAB=*newtable***, OLDTAB=***oldtable***, OPT=***option***, TYPE=***tabletype***

Explanation: VTAM issues this message as part of a message group. The first message in the group is either IST863I or IST865I. See the explanation of those messages for a complete description.

IST865I MODIFY TABLE COMMAND COMPLETE–*text*

Explanation: This message is the first in a message group. A full description of the message group follows.

```
 IST865I  MODIFY TABLE COMMAND COMPLETE–text
[IST864I  NEWTAB=newtable, OLDTAB=oldtable, OPT=option, TYPE=tabletype]
[IST935I  ORIGIN=ncpname, NETID=netid, ID=resourcename]
```

A MODIFY TABLE command was processed successfully.

IST864I

option is one of the following values:

ASSOCIATE
: Change table association with resources

DELETE
: Delete table association with resources

LOAD
: Load or refresh a table, change associations.

tabletype is one of the following values. When *tabletype* is not applicable, for example, specifying OPT=LOAD, ****NA**** will be displayed.

ASLTAB
: Associated LU table

CMIPDDF
: CMIP directory definition file

COSTAB
: Class-of-service table

FILTER
: Session awareness data filter

FLDTAB
: Message flooding table

LOGTAB
: Interpret table

MDLTAB
: Model name table

MODETAB
: Logon mode table

USSTAB
USS table.

IST865I

text is one of the following:

num **ASSOCIATION(S) CHANGED**
This is displayed when the value of *option* is ASSOCIATE. *num* is determined as follows:
- If the value of *tabletype* is USSTAB, LOGTAB, MODETAB, MDLTAB, FLDTAB, or ASLTAB, *num* table associations were changed from *oldtable* to *newtable* for the resource and all of its subordinate nodes specified by the ID parameter (*resourcename*).
- If the value of *tabletype* is COSTAB, *num* table associations were changed for the PU type 4 or PU type 5 identified by the ORIGIN parameter (*ncpname*), to use *newtable* for the network specified by the NETID parameter (*netid*). Because ORIGIN and NETID are required in MODIFY TABLE, *num* will always be 1.

num **FILTER TABLE(S) DELETED**
The current session awareness data filter has been deleted. Trace data for all sessions will be passed over the CNM interface.

NEW TABLE ALREADY ASSOCIATED
New table *newtable* was already associated with the specified resources. For TYPE=COSTAB, the resource is a PU type 4 or PU type 5 and was identified by *ncpname* and *netid* ORIGIN parameters. Otherwise, the resource was identified by *resourcename*, and includes all of its subordinate nodes. To cause a new version of *newtable* to be loaded, MODIFY TABLE,OPTION=LOAD must be entered.

TABLE *newtable* **LOADED**
This is displayed when the value of *option* is LOAD. The text indicates that the new table *newtable* was successfully loaded. All associations with *oldtable* were changed to *newtable*. No count is provided for the number of associations changed.

If the OLDTAB parameter is omitted, *oldtable* will be the same as *newtable*. *tabletype* will always be ****NA****.

num **ASSOCIATION(S) DELETED**
This is displayed when the value of *option* is DELETE. *num* is determined as follows:
- If the value of *tabletype* is USSTAB, LOGTAB, MODETAB, MDLTAB, or ASLTAB, *num* references to *oldtable* have been deleted for the resource and all of its subordinate nodes specified by the ID parameter. The IBM-supplied default table may be used for future session-initiation requests.
- If the value of *tabletype* is COSTAB, the association between the PU type 4 or PU type 5 COS table, identified by the ORIGIN parameter, and the network specified by the NETID parameter has been terminated. The value of *num* will always be 1 and *oldtable* will always be ****NA****.

  newtable will always be *****NA***** because NEWTAB is not allowed in the MODIFY TABLE command for OPTION=DELETE.

IST935I

This message contains additional identification information for certain types of tables.

ncpname is the name of the PU type 4 or PU type 5 specified on the ORIGIN operand.

netid identifies the network specified on the NETID operand.

resourcename is the name of the resource specified on the ID operand.

System Action: Processing continues.

Operator Response: No action is required. DISPLAY ID or DISPLAY COS may be entered to determine which table associations have changed.

Programmer Response: None.

IST866I *command* **HAD NO EFFECT —** *reason*

Explanation: VTAM issues this message in response to the following commands:
- MODIFY ALSLIST
- MODIFY CDRM
- MODIFY DIRECTRY

- MODIFY TRACE
- VARY LOGON.

Possible values of *command* and *reason* follow:

1. **MODIFY ALSLIST command**

   alsname **NOT VALID FOR** *cdrscname*
   alsname is not valid. If *alsname* was specified in the NEWALS field in a MODIFY ALSLIST,ACTION=ADD or ACTION=REPLACE command, ensure that the ALS name specified in the NEWALS field is valid. If *alsname* was specified in the OLDALS field in a MODIFY ALSLIST,ACTION=DELETE or ACTION=REPLACE command, ensure that the ALS name specified in the OLDALS field is valid.

   ISTAPNPU VALID ONLY FOR APPN NODE
   ISTAPNPU was specified on the NEWALS operand of the command, but ISTAPNPU is valid only for an APPN node.

   NO CDRSCS EXIST
   The explanation is determined by the value of ID in the MODIFY ALSLIST command:

   ID=*
   No CDRSC major nodes have been activated.

   ID=*cdrsc major node*
   No cross-domain resources are defined in the major node.

   STORAGE NOT AVAILABLE
   There was not enough storage to add an entry to the adjacent link station table.

2. **MODIFY CDRM command**

   cdrmname **NOT FOUND**
   The CDRM is not currently assigned to any cross-domain resource.

   cdrmname **NOT FOUND FOR** *cdrscname*
   One of the following is true:
   - *cdrscname* is a CDRSC major node. The CDRM is not currently assigned to any cross-domain resource in *cdrmname*.
   - *cdrscname* is a single cross-domain resource. The CDRM currently associated with the *cdrscname* does not match *cdrmname*.

   NO CDRSCS EXIST
   The explanation is determined by the value of ID in the MODIFY CDRM command:

   ID=*
   No CDRSC major nodes have been activated.

   ID=*cdrsc major node*
   No cross-domain resources are defined in the major node.

3. **MODIFY DIRECTRY command**

   oldcpname **NOT FOUND**
   The MODIFY DIRECTRY,UPDATE, ID=*resourcename*, CPNAME=(*newcpname,oldcpname*) command was entered and one of the following is true:
   - The resource named on the ID operand, *resourcename*, is a CDRSC major node. *oldcpname* is not currently the owning control point (CP) of any APPN resource subordinate to *resourcename*
   - The resource named on the ID operand, *resourcename* is a single APPN resource. The owning CP currently associated with *resourcename* does not match *oldcpname*.

   NO APPN CDRSC EXISTS
   The MODIFY DIRECTRY command was issued for a CDRSC major node, but no subordinate APPN resources were found. Note that an APPN CDRSC is identified by the presence of the CPNAME operand on the CDRSC macro definition.

4. **MODIFY TRACE command**

   reason is **VIT TABLE CHANGE IS IN PROGRESS**. The VTAM internal trace (VIT) table change is in progress. Wait a short time, and retry the command.

5. **VARY LOGON command**

   reason is **NO LOGICAL UNITS EXIST**. The logon mode could not be updated because no LUs exist.

System Action: Processing continues. If this message is issued in response to a MODIFY DIRECTRY command, the APPN directory is not modified.

Operator Response: None.

Programmer Response: None.

IST867I SIT TRACE FOR *linename* **FAILED TO ACTIVATE**

Explanation: A MODIFY TRACE,TYPE=SIT command failed for *linename* because of a problem in the scanner. The problem could possibly be caused by unavailable scanner resources or a scanner hardware error.

System Action: Processing continues.

Operator Response: Reenter the command when scanner resources become available. If the command fails, save the system log for problem determination.

Programmer Response: If you cannot determine the cause of the hardware problem, contact the IBM hardware support center.

IST869I USERID = *userid*

Explanation: This message is part of a group of messages that VTAM issues in response to a DISPLAY ID command for an application program. The *userid* listed represents the job controlling the application program at the time of the request. If the *userid* is *****NA*****, the name was not available to VTAM or the application ACB was not opened.

System Action: Processing continues.

Operator Response: None.

Programmer Response: None.

IST870I NETWORK ADDRESS RECEIVED FOR *nodename* **IN USE BY** *resourcename*

Explanation: During SSCP takeover processing, an address mismatch was detected. This mismatch occurs when the operator in the takeover host does not issue the DR deletes for these system generated resources.

System Action: VTAM will do one of the following:

- Request another address for *nodename*.
- Delete system generated resource *resourcename*. See message IST871I for more information.

Operator Response: Verify that all required DR deletes are completed.

Programmer Response: None.

IST871I RESOURCE *resourcename* **{DELETED|NOT DELETED}**

Explanation: VTAM detected an address mismatch error, and attempted to delete resource *resourcename*. Message IST871I indicates whether the attempted deletion was successful. For Dynamic created PUs such as HPR and Connection Network, VTAM deletes the resource (PU) as normal disconnect processing, so the delete portion of this message is for information only.

System Action: The system-generated resource *resourcename* is deleted. If the system-generated resource *resourcename* is a PU, the attached LUs are deleted.

Operator Response: If the deletion failed, delete *resourcename* using MODIFY DR.

Programmer Response: None.

IST872I DR MOVE MISMATCH DETECTED FOR *puname*

Explanation: This message is the first in a group of messages that VTAM issues in response to one of the following:

- VARY DRDS command
- MODIFY DR,TYPE=MOVE command
- When a CONTACT has failed with a sense code indicating a DR mismatch. In this case, an internal MODIFY DR,TYPE=MOVE was sent to move the PU from the generated line to the line that last attached the NCP to the PU.

Possible message groups follow:

```
IST872I  DR MOVE MISMATCH DETECTED FOR puname
IST523I  REASON = RESOURCE WAS MOVED FROM line1, NOT line2
IST314I  END

IST872I  DR MOVE MISMATCH DETECTED FOR puname
IST523I  REASON = puname IS ON line1 IN NCP
IST401I  F DR,TYPE=MOVE INITIATED FOR puname
IST314I  END
```

IST401I

puname is the name of the physical unit that has been moved.

IST523I

puname is the name of the physical unit that has been moved.

line1 is the name of the line from which the NCP actually moved *puname*.

line2 is the name of the line from which VTAM thought *puname* was to be moved.

IST872I

puname is the name of the physical unit that has been moved.

System Action: Processing continues with activation if a MODIFY DR,TYPE=MOVE or VARY DRDS command was issued by the operator.

If the group with the IST401I is issued, an internal MODIFY DR,TYPE=MOVE has been initiated to move the PU to the line that last attached the NCP to the PU. The PU and LUs will be reactivated.

Operator Response: If the message group with message IST401I is issued, save the system log for problem determination. Otherwise, activate the resource immediately, if possible.

Programmer Response: Determine whether the PU is on the correct line in VTAMLST or whether a MODIFY DR,TYPE=MOVE or ADD needs to be issued to put the PU on the correct line.

IST873I PLU SLU SID STATUS

Explanation: This message is part of a group of messages that VTAM issues in the following situations:

- When duplicate session information is received during SSCP takeover processing

  The first message in this message group is IST1419I. See the explanation of that message for a complete description.
- In response to a DISPLAY SESSIONS command when LIST=ALL,SCOPE=ALL is specified.

  A complete description of the message group follows.

```
 IST350I  DISPLAY TYPE = SESSIONS
 IST873I       PLU               SLU              SID        STATUS
 IST874I   netid.pluname    netid.sluname      sessionid     status
[IST875I  {ADJSSCP|ALSNAME} TOWARDS adjacent_resource_type = resource_name [text]]
⋮
 IST878I  NUMBER OF PENDING   SESSIONS = count
[IST1237I    state = number [state = number]]
 IST878I  NUMBER OF ACTIVE    SESSIONS = count
[IST1162I    LU-LU           = count
 IST1162I    CP-CP CONWINNER = count
```

```
 IST1162I    CP-CP CONLOSER  = count]
 IST878I  NUMBER OF QUEUED    SESSIONS = count
[IST1237I    state = number [state = number]]
 IST878I  NUMBER OF TOTAL     SESSIONS = count
[IST1161I SSCP SESSIONS
 IST1162I    SSCP-LU         = count
 IST1162I    SSCP-PU         = count
 IST1162I    SSCP-SSCP       = count]
 IST314I  END
```

Notes:

1. Information about sessions with unknown partners is not provided by the DISPLAY SESSIONS command. If this information is needed, enter a DISPLAY ID command for the known session partners.
2. Messages IST1161I and IST1162I are only displayed when information about all active sessions is requested. If specific sessions are requested using the PLU, SLU, LU1, LU2, or SID operand on the command, messages IST1161I and IST1162I are not displayed.
3. Refer to *z/OS Communications Server: SNA Operation* for a description of the DISPLAY SESSIONS command.

IST350I

This message identifies the type of information shown in the display. For this message group, the display type is always **SESSIONS**.

IST873I

This message is a header message for the information displayed in IST874I.

IST874I

pluname is the network-qualified primary session partner name.

sluname is the network-qualified secondary session partner name.

sessionid is the session identifier. For additional information on the session, enter a DISPLAY SESSIONS,SID=*sessionid* command.

status is the session status. See the *z/OS Communications Server: IP and SNA Codes* for a description of possible session initiation and termination states.

Note: If the display shows the same session twice with two different values of *status*, both LOCATE and BIND processing for the session might be occurring simultaneously. This situation should last for only a short time. Retry the DISPLAY SESSIONS command. If the session still appears twice, there might be a hung session.

IST875I

This message displays information about an adjacent SSCP (**ADJSSCP**) or adjacent link station (**ALSNAME**).

VTAM may issue this message twice if the issuing SSCP is an intermediate host.

adjacent_resource_type is one of the following:

DLU
The adjacent SSCP is in the direction of the destination logical unit (DLU), and a CDINIT or DSRLST is pending for the session. **DLU** applies only to adjacent SSCPs.

PLU
The adjacent SSCP or adjacent link station is in the direction of the primary logical unit (PLU).

RTP
The ALSNAME or APPNCOS is used in the direction of other endpoint of the RTP pipe.

SLU
The adjacent SSCP or adjacent link station is in the direction of the secondary logical unit (SLU).

resource_name is the name of the adjacent SSCP toward the indicated *adjacent_resource_type*.

text is not displayed when:
- The resource described in this message is an adjacent link station.
- The SSCP is not gateway capable.

IST873I

- The SSCP-SSCP session is a cross-domain session.

Possible values of *text* are:

GWNCP NAME NOT AVAILABLE
The gateway NCP name is not known to VTAM.

GWNCP TOWARDS *gateway_type* **=** *gwncp*
The gateway NCP name is known to VTAM.

Possible values of *gateway_type* are:

DLU
The gateway NCP is toward the DLU. VTAM issues **DLU** only if *adjacent_resource_type* is **DLU**.

PLU
The gateway NCP is toward the PLU.

SLU
The gateway NCP is toward the SLU.

gwncp is the gateway NCP toward the *pluname* or *sluname* in message IST874I.

IST878I

This message displays the number of **PENDING**, **ACTIVE**, **QUEUED**, and **TOTAL** sessions.

count is the number of sessions of a specified type.

Notes:

1. If the value of the MAX operand is exceeded, *count* displays **********.
2. If LOCATE and BIND processing for a session is occurring simultaneously, *count* includes both sessions.

IST1154I

This message is displayed when *name* in message IST1364I is a generic resource name.

resourcename is a logical unit or an application in the form *netid.name*.

IST1161I

This message is a header message for IST1162I. The IST1161I/IST1162I subgroup is displayed when active SSCP-LU and SSCP-PU sessions and active and pending active SSCP-SSCP sessions exist.

IST1162I

This message is issued when active or pending active sessions exist.

– If all active sessions are requested, this message follows message IST878I and displays the number of active LU-LU and CP-CP sessions (CONWINNER and CONLOSER).

  Note: If the value of the MAX operand is exceeded, *count* for the LU-LU sessions displays **********.

  count for **CP-CP CONWINNER** and **CP-CP CONLOSER** is usually the same. If these numbers are different, VTAM is in the process of bringing up the session or taking it down. No user action is needed.

– If all active sessions are requested, this message follows header message IST1161I and displays active SSCP-LU and SSCP-PU sessions and active and pending active SSCP-SSCP sessions. *count* for SSCP-SSCP sessions also includes pending sessions. *count* in message IST878I for **ACTIVE** and **TOTAL** sessions does not include these sessions.

  - The value of *count* for active SSCP-LU sessions includes two VTAM-initiated sessions with the ISTNOP and ISTPDCLU applications.
  - The value of *count* for SSCP-SSCP sessions includes both pending and active sessions.

If specific sessions are requested using the PLU, SLU, LU1, LU2, or SID operand on the command, this message is not displayed.

IST1237I

This message is issued for **PENDING** and **QUEUED** sessions only, and displays status information. If *count* is **0**, message IST1237I is not displayed.

state is the state of the session. See the *z/OS Communications Server: IP and SNA Codes* for a description of possible session initiation and termination states.

number is the number of sessions in the specified *state*.

IST1364I

This message is displayed when *name* is a generic resource name. It serves as the header message for message IST1154I.

name is the generic resource name for the group of resources displayed.

System Action: Processing continues.

Operator Response: None.

Programmer Response: None.

IST874I *netid.pluname netid.sluname sessionid status*

Explanation: VTAM issues this message as part of a group of messages.

- If the message group is headed by IST1419I, see the explanation of that message for a complete description of the message group.
- Otherwise, see the explanation of IST873I for a complete description of the message group.

IST875I **{ADJSSCP|ALSNAME|APPNCOS} TOWARDS** *adjacent_resource_type* **=** *resource_name* **[***text***]**

Explanation: VTAM issues this message as part of a group of messages in response to a DISPLAY SESSIONS, DISPLAY APING, or DISPLAY ID=*rtp_pu* command. See the explanations of IST873I, IST878I, IST879I, IST1476I, and IST1489I for a complete description of possible message groups.

This message displays information about an adjacent SSCP (**ADJSSCP**), adjacent link station (**ALSNAME**), or APPN class of service (**APPNCOS**).

VTAM may issue this message twice if the issuing SSCP is an intermediate host.

adjacent_resource_type is one of the following:

DLU
The adjacent SSCP is in the direction of the destination logical unit (DLU), and a CDINIT or DSRLST is pending for the session. **DLU** applies only to adjacent SSCPs.

PLU
The adjacent SSCP or adjacent link station is in the direction of the primary logical unit (PLU).

RTP
The ALSNAME or APPNCOS is used in the direction of other endpoint of the RTP pipe.

SLU
The adjacent SSCP or adjacent link station is in the direction of the secondary logical unit (SLU).

resource_name is one of the following:

- If **ADJSSCP** or **ALSNAME** display in this message, *resource_name* is the name of the adjacent SSCP toward the indicated *adjacent_resource_type*.
- If **APPNCOS** displays in this message, *resource_name* is the APPN class-of-service (COS) name.

text is not displayed when:
- The resource described in this message is an adjacent link station.
- The SSCP is not gateway capable.
- The SSCP-SSCP session is a cross-domain session.
- An APPN class-of-service name is displayed.

Possible values of *text* are:

GWNCP NAME NOT AVAILABLE
The gateway NCP name is not known to VTAM.

GWNCP TOWARDS *gateway_type* **=** *gwncp*
The gateway NCP name is known to VTAM.

Possible values of *gateway_type* are:

DLU
The gateway NCP is toward the DLU. VTAM issues **DLU** only if *adjacent_resource_type* is **DLU**.

PLU
The gateway NCP is toward the PLU.

SLU
The gateway NCP is toward the SLU.

gwncp is the gateway NCP toward the *pluname* or *sluname* in message IST874I.

System Action: Processing continues.

Operator Response:

- If this message is preceded by message IST873I and IST874I, see the explanation of IST873I for a description of the group.
- If this message is preceded by message IST879I, see the explanation of that message for a description of the group.
- If this message is preceded by message IST1476I, see the explanation of that message for a description of the group.

Programmer Response: None.

IST876I SIGNALS NEEDED TO COMPLETE SESSION {SETUP|TAKEDOWN}

Explanation: VTAM issues this message as part of a group of messages. The first message of the group is IST879I. See the explanation of that message for a complete description. IST876I is the header for message IST877I, and is issued only if the session state is pending session start or pending session end.

IST877I *signal1* **[***signal2***] [***signal3***] [***signal4***]**

Explanation: VTAM issues this message as part of a group of messages. The first message of the group is IST879I. See the explanation of that message for a complete description. IST877I is issued only if the session state is pending session start or pending session end.

IST878I NUMBER OF *type* **SESSIONS =** *count*

Explanation: This message is part of a group of messages that VTAM issues in response to a DISPLAY SESSIONS command.

Possible message groups follow.

- LIST=COUNT (default)

```
 IST350I  DISPLAY TYPE = SESSIONS
[IST875I  {ADJSSCP|ALSNAME} TOWARDS adjacent_resource_type = resource_name [text]]
:
 IST878I  NUMBER OF PENDING   SESSIONS = count
 IST878I  NUMBER OF ACTIVE    SESSIONS = count
 IST878I  NUMBER OF QUEUED    SESSIONS = count
 IST878I  NUMBER OF TOTAL     SESSIONS = count
[IST1161I SSCP SESSIONS
 IST1162I    SSCP-LU         = count
 IST1162I    SSCP-PU         = count
 IST1162I    SSCP-SSCP       = count]
 IST314I  END
```

- LIST=SUMMARY

```
 IST350I  DISPLAY TYPE = SESSIONS
[IST875I  {ADJSSCP|ALSNAME} TOWARDS adjacent_resource_type = resource_name [text]]
:
 IST878I  NUMBER OF PENDING   SESSIONS = count
[IST1237I    state = number [state = number]]
 IST878I  NUMBER OF ACTIVE    SESSIONS = count
[IST1162I    LU-LU           = count
 IST1162I    CP-CP CONWINNER = count
 IST1162I    CP-CP CONLOSER  = count]
 IST878I  NUMBER OF QUEUED    SESSIONS = count
[IST1237I    state = number [state = number]]
 IST878I  NUMBER OF TOTAL     SESSIONS = count
[IST1161I SSCP SESSIONS
 IST1162I    SSCP-LU         = count
 IST1162I    SSCP-PU         = count
 IST1162I    SSCP-SSCP       = count]
 IST314I  END
```

- LIST=ALL

  See the explanation of message IST873I for a complete description of this group.

Notes:

1. Information about sessions with unknown partners is not provided by the DISPLAY SESSIONS command. If this information is needed, enter a DISPLAY ID command for the known session partners.
2. Messages IST1161I and IST1162I are only displayed when information about all active sessions is requested. If specific sessions are requested using the PLU, SLU, LU1, LU2, or SID operand on the command, messages IST1161I and IST1162I are not displayed.
3. Refer to *z/OS Communications Server: SNA Operation* for a description of the DISPLAY SESSIONS command.

IST350I

This message identifies the type of information shown in the display. For this message group, the display type is always **SESSIONS**.

IST875I

This message displays information about an adjacent SSCP (**ADJSSCP**) or adjacent link station (**ALSNAME**).

VTAM may issue this message twice if the issuing SSCP is an intermediate host.

adjacent_resource_type is one of the following:

DLU
The adjacent SSCP is in the direction of the destination logical unit (DLU), and a CDINIT or DSRLST is pending for the session. **DLU** applies only to adjacent SSCPs.

PLU
The adjacent SSCP or adjacent link station is in the direction of the primary logical unit (PLU).

RTP
The ALSNAME or APPNCOS is used in the direction of other endpoint of the RTP pipe.

SLU
The adjacent SSCP or adjacent link station is in the direction of the secondary logical unit (SLU).

resource_name is the name of the adjacent SSCP toward the indicated *adjacent_resource_type*.

text is not displayed when:
- The resource described in this message is an adjacent link station.
- The SSCP is not gateway capable.
- The SSCP-SSCP session is a cross-domain session.

Possible values of *text* are:

GWNCP NAME NOT AVAILABLE
The gateway NCP name is not known to VTAM.

IST878I

GWNCP TOWARDS *gateway_type* **=** *gwncp*
The gateway NCP name is known to VTAM.

Possible values of *gateway_type* are:

DLU
The gateway NCP is toward the DLU. VTAM issues **DLU** only if *adjacent_resource_type* is **DLU**.

PLU
The gateway NCP is toward the PLU.

SLU
The gateway NCP is toward the SLU.

gwncp is the gateway NCP toward the *pluname* or *sluname* in message IST874I.

IST878I

This message displays the number of **PENDING**, **ACTIVE**, **QUEUED**, and **TOTAL** sessions.

count is the number of sessions of a specified type.

Notes:

1. If the value of the MAX operand is exceeded, *count* displays **********.
2. If LOCATE and BIND processing for a session is occurring simultaneously, *count* includes both sessions.

IST1161I

This message is a header message for IST1162I. The IST1161I/IST1162I subgroup is displayed when active SSCP-LU and SSCP-PU sessions and active and pending active SSCP-SSCP sessions exist.

IST1162I

This message is issued when active or pending active sessions exist.

– If all active sessions are requested, this message follows message IST878I and displays the number of active LU-LU and CP-CP sessions (CONWINNER and CONLOSER).

  Note: If the value of the MAX operand is exceeded, *count* for the LU-LU sessions displays **********.

  count for **CP-CP CONWINNER** and **CP-CP CONLOSER** is usually the same. If these numbers are different, VTAM is in the process of bringing up the session or taking it down. No user action is needed.

– If all active sessions are requested, this message follows header message IST1161I and displays active SSCP-LU and SSCP-PU sessions and active and pending active SSCP-SSCP sessions. *count* for SSCP-SSCP sessions also includes pending sessions. *count* in message IST878I for **ACTIVE** and **TOTAL** sessions does not include these sessions.
  - The value of *count* for active SSCP-LU sessions includes two VTAM-initiated sessions with the ISTNOP and ISTPDCLU applications.
  - The value of *count* for SSCP-SSCP sessions includes both pending and active sessions.

If specific sessions are requested using the PLU, SLU, LU1, LU2, or SID operand on the command, this message is not displayed.

IST1237I

This message is issued for **PENDING** and **QUEUED** sessions only, and displays status information. If *count* is **0**, message IST1237I is not displayed.

state is the state of the session. See the *z/OS Communications Server: IP and SNA Codes* for a description of possible session initiation and termination states.

number is the number of sessions in the specified *state*.

System Action: Processing continues.

Operator Response: None.

Programmer Response: None.

IST879I **{PLU{***lutype***}|SLU{***lutype***}} REAL =** *realname* **ALIAS =** *aliasname*

Explanation: This message is the first in a group of messages that VTAM issues in response to a DISPLAY SESSIONS,SID command. A complete description of the message group follows:

```
 IST350I  DISPLAY TYPE = SESSIONS
 IST879I  PLU{lutype}   REAL = realname ALIAS = aliasname
 IST879I  SLU{lutype}   REAL = realname ALIAS = aliasname
 IST880I  SETUP STATUS = status  [TAKEDOWN STATUS = takedownstatus ]
[IST875I  {ADJSSCP|ALSNAME} TOWARDS adjacent_resource_type = resource_name  [text]]
:
:
[IST876I  SIGNALS NEEDED TO COMPLETE SESSION {SETUP|TAKEDOWN}]
[IST877I  signal1    [signal2]    [signal3]  [signal4]]
 IST933I  LOGMODE=logmode, COS=cosentry [(FROM OLU)]
[IST1438I LOGMODE logmode UNKNOWN IN THIS DOMAIN, DEFAULT IS ISTCOSDF]
[IST875I  APPNCOS TOWARDS adjacent_resource_type = resource_name  [text]]
:
:
[IST1048I COMPRESSION LEVEL – INPUT = input_level, OUTPUT = output_level]
[IST1049I PERCENT REDUCTION – INPUT = input_percent, OUTPUT = output_percent]
[IST1165I REMOTE network_type ADDRESS = connection_address]
[IST1165I LOCAL  network_type ADDRESS = connection_address]
 IST1635I {PLU|SLU} HSCB TYPE: hscbtype LOCATED AT ADDRESS X'hscbaddr'
[IST1635I {PLU|SLU} HSCB TYPE: hscbtype LOCATED AT ADDRESS X'hscbaddr']
 IST1636I PACING STAGE(S) AND VALUES:
[IST1637I PLU--STAGE 1--SLU]
[IST1644I PLU--STAGE 1-----|-----STAGE 2--SLU]
[IST1645I PLU--STAGE 1-----|-----STAGE 2-----|-----STAGE 3--SLU]
 IST1638I stage: PRIMARY TO SECONDARY DIRECTION - pacingtype
[IST1639I        PRIMARY SEND: CURRENT = pscur  NEXT = psnext]
[IST1640I        SECONDARY RECEIVE = srcvcnt]
 IST1641I stage: SECONDARY TO PRIMARY DIRECTION - pacingtype
[IST1642I        SECONDARY SEND: CURRENT = sscur  NEXT = ssnext]
[IST1643I        PRIMARY RECEIVE   = prcvcnt]
:
:
[IST1710I RSCV FROM PLU SAVED AT SESSION ACTIVATION]
[IST1460I TGN  CPNAME             TG TYPE      HPR]
[IST1461I tgn  cpname             tgtype       hpr]
[IST1713I RTP RSCV IN THE DIRECTION OF THE session_partner]
[IST1460I TGN  CPNAME             TG TYPE      HPR]
[IST1461I tgn  cpname             tgtype       hpr]
[IST1711I RSCV FROM SLU SAVED AT SESSION ACTIVATION]
[IST1460I TGN  CPNAME             TG TYPE      HPR]
[IST1461I tgn  cpname             tgtype       hpr]
[IST1713I RTP RSCV IN THE DIRECTION OF THE session_partner]
[IST1460I TGN  CPNAME             TG TYPE      HPR]
[IST1461I tgn  cpname             tgtype       hpr]
[IST1758I RSCV TOWARDS DLUR SAVED AT SESSION ACTIVATION]
[IST1460I TGN  CPNAME             TG TYPE      HPR]
[IST1461I tgn  cpname             tgtype       hpr]
[IST1759I RTP RSCV FROM THE DIRECTION OF THE DLUR]
[IST1460I TGN  CPNAME             TG TYPE      HPR]
[IST1461I tgn  cpname             tgtype       hpr]
[IST1714I NO PATH INFORMATION EXISTS]
IST314I  END
```

IST350I

This message identifies the type of information shown in the display. For this message group, the display type is always **SESSIONS**.

IST875I

This message displays information about an adjacent SSCP (**ADJSSCP**), adjacent link station (**ALSNAME**), or APPN class of service (**APPNCOS**).

VTAM may issue this message twice if the issuing SSCP is an intermediate host.

IST879I

adjacent_resource_type is one of the following:

DLU
The adjacent SSCP is in the direction of the destination logical unit (DLU), and a CDINIT or DSRLST is pending for the session. **DLU** applies only to adjacent SSCPs.

PLU
The adjacent SSCP or adjacent link station is in the direction of the primary logical unit (PLU).

RTP
The ALSNAME or APPNCOS is used in the direction of other endpoint of the RTP pipe.

SLU
The adjacent SSCP or adjacent link station is in the direction of the secondary logical unit (SLU).

resource_name is one of the following:
- If **ADJSSCP** or **ALSNAME** display in this message, *resource_name* is the name of the adjacent SSCP toward the indicated *adjacent_resource_type*.
- If **APPNCOS** displays in this message, *resource_name* is the APPN class-of-service (COS) name.

text is not displayed when:
- The resource described in this message is an adjacent link station.
- The SSCP is not gateway capable.
- The SSCP-SSCP session is a cross-domain session.
- An APPN class-of-service name is displayed.

Possible values of *text* are:

GWNCP NAME NOT AVAILABLE
The gateway NCP name is not known to VTAM.

GWNCP TOWARDS *gateway_type* **=** *gwncp*
The gateway NCP name is known to VTAM.

Possible values of *gateway_type* are:

DLU
The gateway NCP is toward the DLU. VTAM issues **DLU** only if *adjacent_resource_type* is **DLU**.

PLU
The gateway NCP is toward the PLU.

SLU
The gateway NCP is toward the SLU.

gwncp is the gateway NCP toward the *pluname* or *sluname* in message IST874I.

IST876I

This message is a header message for IST877I.

IST877I

signal1–signal4 are signals. They are displayed only if the session is pending session start or session end.

The meaning of the signals is described below:

BFSESSST-SLU
A BFSESSST is expected from the NCP of the SLU.

CDSESSST-PLU
A cross-domain session start request is expected from the direction of the PLU.

CDSESSST-SLU
A cross-domain session start request is expected from the direction of the SLU.

SESSST-PLU
A session start request is expected from the boundary function of the PLU.

SESSST-SLU
A session start request is expected from the boundary function of the SLU.

NTFYST-GWN-PLU
Notification of a session start is expected from the gateway node in the PLU direction.

NTFYST-GWN-SLU
Notification of a session start is expected from the gateway node in the SLU direction.

The following signals are displayed only if the session is pending session end (PSESEND):

BFSESSEND-SLU
A BFSESSEND is expected from the NCP of the SLU.

CDSESSEND-PLU
A cross-domain session end request is expected from the direction of the PLU.

CDSESSEND-SLU
A cross-domain session end request is expected from the direction of the SLU.

SESSEND-PLU
A session end request is expected from the boundary function of the PLU.

SESSEND-SLU
A session end request is expected from the boundary function of the SLU.

NTFYSE-GWN-PLU
Notification of a session end is expected from the gateway node in the PLU direction.

NTFYSE-GWN-SLU
Notification of a session end is expected from the gateway node in the SLU direction.

IST879I

lutype is **OLU, DLU**, or blank.

– **OLU** is displayed if the LU is the origin session partner.
– **DLU** is displayed if the LU is the destination session partner.
– A blank is displayed in this field if OLU and DLU are not known because SSCP takeover has occurred. For information on takeover of of resources, see the *z/OS Communications Server: SNA Network Implementation Guide*

realname is the network-qualified real name of the primary or secondary session partner.

aliasname is the network-qualified alias name of the primary or secondary session partner. If *aliasname* is not used to locate the primary or secondary session partner, VTAM displays *****NA*****.

IST880I

status is the session status. See the *z/OS Communications Server: IP and SNA Codes* for a description of possible session initiation and termination statuses.

takedownstatus is the session status during session termination. If session termination is not in progress, *takedownstatus* is blank. See the *z/OS Communications Server: IP and SNA Codes* for a description of *takedownstatus*.

IST933I

logmode is the name of the entry in the logon mode table used to set up certain session parameters. These entries are rules governing how a session is to be conducted. The name specified is that known in this domain.

LOGMODE=*NA*****
LOGMODE is unknown in this domain and cannot be determined.

LOGMODE=*logmode*
LOGMODE can be determined in this domain.

LOGMODE=*BLANK*
LOGMODE can be determined in this domain and is blank. This is a valid LOGMODE entry.

cosentry is the name of an entry in the subarea class-of-service table containing a list of routes allowed for a session. The COS name can be displayed in the following formats:

COS=*NA*****

- The subarea COS name is unknown in this domain and cannot be determined.
- There is no subarea COS name to display because **APPNCOS** is displayed in message IST875I. If APPN session setup is not completed, the APPN COS name may not display in IST875I. This is a temporary situation.

COS=*cosname*
The subarea COS name can be determined in this domain.

COS=*BLANK*
The subarea COS name can be determined in this domain and is blank. This is a valid COS name entry.

COS=*cosname* **(FROM OLU)**
The subarea COS name can be determined but is known as in the OLU domain.

IST1048I

This message is issued only if data compression is being used for this session.

input_level is the compression level used for input session traffic.

output_level is the compression level used for output session traffic.

IST1049I

This message is issued only if data compression is being used for this session.

input_percent is the percent by which input session traffic is compressed.

output_percent is the percent by which output session traffic is compressed.

If no new data has flowed since the last time you did a display, VTAM issues ***NA*** for *input_percent* and *output_percent*.

IST1165I

This message is issued when the session identified by SID is established across a non-SNA network such as TCP/IP and when VTAM is directly attached to the non-SNA connection endpoint.

- **REMOTE** or **LOCAL** indicates the location of the *connection_address* from the perspective of the VTAM node requesting the information. Each session will have both a **LOCAL** and a **REMOTE** *connection_address*.

  REMOTE - From this VTAM's perspective, the address is located on the other side of the non-SNA network.

  LOCAL - From this VTAM's perspective, the address is located on this side of the non-SNA network. The local LU IP address displayed is all zeros when a connect() call fails. The IP address is not known until the connect() call is successful.
- *network_type* is always **TCP/IP**.
- *connection_address* is the address at the connection endpoint. A TCP/IP address is displayed in dotted decimal notation in the form IP address..port number. An example is 123.456.789.012..12345, where 123.456.789.012 is the IP address and 12345 is the port number.

For more information on IP addressing, see the *z/OS Communications Server: IP Configuration Guide*.

IST1438I

This message is issued only if *logmode* is unknown in this domain and ISTCOSDF can be used as a default. See the *z/OS Communications Server: SNA Resource Definition Reference* and *z/OS Communications Server: SNA Network Implementation Guide* for more information on ISTCOSDF.

- *logmode* is the LOGMODE displayed in message IST933I.

IST1460I

This message is a header message for information displayed in IST1461I.

IST1461I

The route selection control vector (RSCV) is displayed for the route to the destination node of the partner transaction program. Multiple IST1461I messages might be needed to display the full route.

tgn is the transmission group number.

cpname is the destination CP name for the transmission group.

Note: The *cpname* for a composite network node might not be correct. When an SSCP takeover occurs for an NCP in a composite network node and the *cpname* was changed, the new *cpname* is not reflected in the display of the RTP end-to-end route.

tgtype is the transmission group type. The values for *tgtype* can be:

– **APPN**
– **INTERCHANGE**
– **VRTG**
– **ISL**

hpr corresponds with the HPR start option. The values for *hpr* can be:

– **RTP** indicates that this node provides RTP-level HPR support.
– **ANR** indicates that this node provides ANR-level HPR support.
– ***NA*** indicates that this node provides no HPR support.

IST1635I

hscbtype is the half-session control block type and can be one of the following:

FMCB Function management control block. The PLU or SLU is an application on this host.

BSB Boundary session block. The PLU or SLU is connected through an SNA channel-attached device.

LUST Logical unit status table. The PLU is in session with a local non-SNA device on this host.

IST1635I may be displayed multiple times, depending on the configuration. IST1635I is not displayed if the PLU or SLU is a cross-domain resource (CDRSC).

hscbaddr is the hexadecimal address of the half session control block (HSCB).

IST1636I

IST1636I is a header message for the pacing messages that follow. Messages IST1638I through IST1643I may be repeated for multiple stages.

IST1637I

This message is the header message for pacing messages between the session partners when there is only one stage.

IST1638I

This message describes the pacing stages and types that exist when transmitting data from the PLU to the SLU. The host can display up to three pacing stages. More stages may exist if the session traverses many hosts.

stage indicates the pacing stage being described. For more information on pacing stages, see the *z/OS Communications Server: SNA Network Implementation Guide*.

pacingtype can be one of the following:

ADAPTIVE
Adaptive pacing allows the pacing windows to expand and contract, depending on storage availability at the pacing stage boundaries.

FIXED Fixed pacing allows a pre-negotiated number of PIUs to flow on this pacing stage before an isolated pacing response (IPR) is required to reset the window. The fixed window does not expand or contract. This pacing always uses the fixed value.

NO PACING
VTAM does no pacing for this stage between the SLU and the PLU. This value is only displayed for local non-SNA devices.

IST1639I

pscur represents the current pacing window between the PLU and the SLU.

psnext represents the next pacing window VTAM will use when transmitting data between the PLU and the SLU.

IST1640I

srcvcnt represents the number of PIUs the SLU can receive from the PLU.

IST1641I

This message describes the pacing stages and types that exist when transmitting data from the SLU to the PLU. The host can display up to three pacing stages. More stages may exist if the session traverses many hosts.

stage indicates the pacing stage being described. For more information on pacing stages, see the *z/OS Communications Server: SNA Network Implementation Guide*.

pacingtype can be one of the following:

ADAPTIVE
Adaptive pacing allows the pacing windows to expand and contract, depending on storage availability at the pacing stage boundaries.

FIXED Fixed pacing allows a pre-negotiated number of PIUs to flow on this pacing stage before an isolated pacing response (IPR) is required to reset the window. The fixed window does not expand or contract. This pacing always uses the fixed value.

NO PACING
VTAM does no pacing for this stage between the PLU and the SLU. This value is only displayed for local non-SNA devices.

IST1642I

sscur represents the current pacing window between the SLU and the PLU.

ssnext represents the next pacing window VTAM will use when transmitting data between the SLU and the PLU.

IST1643I

prcvcnt represents the number of PIUs the PLU can receive from the SLU.

IST1644I

This message is the header message for pacing messages between the session partners when there are two stages.

IST1645I

This message is the header message for pacing messages between the session partners when there are three stages.

IST1710I

This message informs users that the messages that follow describe part or all of the session path for this session as it was calculated during session activation. The session path information describes the portion of the route originating at the CP(PLU) and extending toward this node. This message group will be displayed only if session data was saved during session activation.

IST1711I

This message informs users that the messages that follow describe part or all of the session path for this session as it was calculated during session activation. The session path information describes the portion of the route originating at this node and extending toward the CP(SLU). This message group will be displayed only if session data was saved during session activation.

IST1713I

This message informs users that the messages that follow describe the current end-to-end path of an RTP route. The route represents the portion of the total session route that utilizes an RTP pipe with this node as one endpoint and extending in the direction of *session_partner*. The RTP route may be different from any session route displayed in the IST1710I or IST1711I message group if RTP pathswitching has occurred since session activation;

in that case, the information in IST1713I is the more accurate information. This message group is displayed only if the session uses an RTP pipe in the direction of *session_partner*.

session_partner can be one of the following:

PLU Displays when the RTP path extends in the direction of the primary logical unit for the session.

SLU Displays when the RTP path extends in the direction of the secondary logical unit for the session.

IST1714I

This message informs users that no session or RTP path information is available to display for this session.

IST1758I

This message informs users that the messages that follow describe part or all of the session path for this session as it was calculated during session activation. The session path information represents a view of the session from the dependent LU requestor (DLUR) node which is acting as CP(SLU). This message group will be displayed only if the following conditions are true:

– The session involves a DLUR-owned dependent SLU.
– The DLUR node reports the session path information for the section.
– Session data is being saved during session activation or dependent LU activation.

IST1759I

This message informs users that the messages that follow describe the current end-to-end path of an RTP route. The route represents the portion of the total session route that utilizes an RTP pipe with the Dependent LU Requester (DLUR) serving as one endpoint and extending in the direction of the CP(PLU). The RTP route may be different from the session route displayed in the IST1758I message group if RTP pathswitching has occurred since session activation; in that case, the information in IST1759I is the more accurate information. This message group is displayed only if the following conditions are true:

– The session involves a DLUR-owned dependent LU.
– The session uses an RTP pipe ending at the DLUR node.
– The DLUR node reports RTP route information for the session.
– RTP data is being saved during session activation or dependent LU activation.

System Action: Processing continues.

Operator Response: If message IST1438I is displayed and the default logmode is not desired, collect the system log for problem determination.

Programmer Response:

If message IST1438I is not displayed, no action is necessary.

If message IST1438I is displayed, and *logmode* (instead of ISTCOSDF) should have been known in this domain, verify that *logmode* is in the LOGMODE table associated with the SLU or in the default LOGMODE table ISTINCLM.

IST880I **SETUP STATUS =** *status* **[TAKEDOWN STATUS =** *takedownstatus***]**

Explanation: This message is part of a message group. The first message of the group is IST879I. See the explanation of that message for a complete description.

System Action: Processing continues.

Operator Response: None.

Programmer Response: None.

IST881I *text* **LINK STATION** *linkstation*

Explanation: This message is part of a group of messages that VTAM issues when CONTACT is unexpectedly lost with a channel-attached controller. VTAM may issue this message group in response to a VARY ACT,LOAD=YES or LOAD=U command from another host. The complete message group follows:

```
IST881I  text LINK STATION linkstation
IST882I  WAITING FOR DEVICE END FROM DEVICE
```

If the controller is online and was activated with DUMPLOAD=YES, SAVEMOD=YES, and LOADFROM=EXT, there is a high probability that it is dumping or loading.

VTAM might issue IST881I twice; message IST259I might appear between the two.

text can be one of the following:
- **LOST CONTACT TO**
- **UNABLE TO CONTACT**

linkstation is the ID of the affected link station.

System Action:

If *text* is **LOST CONTACT TO**, VTAM suspends CONTACT processing until Device End is received, indicating that the controller is now available.

If *text* is **UNABLE TO CONTACT**, a channel program ended indicating an error condition that should not occur. VTAM will attempt error recovery and will issue messages to report the results.

Operator Response: Normally, no operator action is necessary. When the controller becomes available (signaled by Device End), VTAM resumes CONTACT processing. VTAM issues messages to indicate that the controller has been able.

To terminate CONTACT processing before the device becomes available, enter a VARY INACT,FORCE command to inactivate the controller.

Note: If the controller does not respond with Device End, some other action has terminated the load, dump, or recovery action. Ensure that the device is online.

Programmer Response: None.

IST882I WAITING FOR DEVICE END FROM DEVICE

Explanation: VTAM issues this message as part of a group of messages. The first message of the group is IST881I. See the explanation of that message for a complete description.

IST883I *percentage* **OF SAW BUFFERS USED [— SAW AND PIU TRACE HALTED]**

Explanation: *percentage* indicates the percentage of session awareness (SAW) buffers used relative to the specified limit.

System Action: The following amounts indicate the action:

ABOVE *percent*
percent of the user-specified limit for SAW buffers has been used. (*percent* will be issued for 80 or 90 percent.) Processing continues.

BELOW 80%
Indicates the percentage of use has dropped from 80% or more to below 80%. Processing continues.

OVER 100%
Over 100% of the user-specified limit has been reached. SAW and PIU trace processing is terminated.

Operator Response: If the user-specified limit is reached and SAW processing and PIU trace processing are terminated, the network management application (for example, the NetView program) must be canceled and should be recycled.

Programmer Response: If VTAM issues this message frequently, re-evaluate the buffer-use limit specified when SAW or PIU trace processing was initiated.

IST886I *commandinfo* **[***statementname***]** *action resource* **[TO** *toname***] [FROM** *fromname***] FAILED**

Explanation: This message is the first in a group of messages that VTAM issues to indicate that a dynamic reconfiguration or dynamic change failed. The failure resulted from a MODIFY DR, a VARY DRDS, or a VARY ACT command.

Possible message groups follow:

1. **MODIFY DR command**

```
IST886I MODIFY DR action resource [TO toname] FROM fromname FAILED
IST523I REASON = reason
```

IST886I

commandinfo is always **MODIFY DR** for this message group.

action is the command type:
- **DELETE** to delete a physical or logical unit
- **MOVE** to move a physical unit and its associated LUs.

resource is the name of the physical unit or logical unit affected by the command.

toname is the name of the line to which the PU is being moved, and is only displayed when *action* is **MOVE**.

fromname is the name of the line from which the PU is being moved or deleted, or the name of the PU from which the LU is being deleted.

IST523I

This message explains the reason for the failure. Possible values of *reason* are explained later in this message explanation.

2. **VARY DRDS command**

```
IST886I  DR drname [statementname] action resource [TO toname] [FROM fromname] FAILED
IST523I  REASON = reason
IST368I  FUNCTION GROUP functiongroup FAILED
```

IST886I

commandinfo is always **DR** *drname* for this message group.

drname is the name of the dynamic reconfiguration data set containing the reconfiguration definition statements.

statementname, if specified, is the name of the specific definition statement that failed.

action is the definition statement:
- **ADD** to add a physical or logical unit
- **DELETE** to delete a physical or logical unit
- **MOVE** to move a physical unit and its associated LUs.

resource is the name of the physical unit or logical unit affected by the definition statement.

toname is the name of the line to which the PU is being moved or added, or the name of the PU to which the LU is to be added. *toname* is only displayed when *action* is MOVE or ADD.

fromname is the name of the line from which the PU is being moved or deleted, or the name of the PU from which the LU is being deleted. *fromname* is only displayed when *action* is **MOVE** or **DELETE**.

IST523I

This message explains the reason for the failure. Possible values of *reason* are explained later in this message explanation.

IST368I

This message names the specific definition statement in the dynamic reconfiguration data set that failed.

functiongroup is the name on the ADD, DELETE, or MOVE definition statement in the VARY DRDS deck of the specific definition statement that failed.

3. **VARY ACT command**

```
IST886I  VARY ACT [statementname] action resource [TO toname] [FROM fromname] FAILED
IST523I  REASON = reason
```

IST886I

commandinfo is always **VARY ACT** for this message group.

statementname is the major node name which was specified on the ID operand of the VARY ACT command.

action is the action being performed when the failure occurred:
- **ADD** to add a physical or logical unit
- **CHANGE** to change an operand value
- **DELETE** to delete a physical or logical unit

- **MOVE** to move a physical unit and its associated LUs or to move a logical unit

resource is the name of the physical unit or logical unit affected by the command.

toname is the name of the line to which the PU is being moved or added, or the name of the PU to which the LU is being moved or added. *toname* is only displayed when *action* is **MOVE** or **ADD**.

fromname is the name of the line from which the PU is being moved or deleted, or the name of the PU from which the LU is being moved or deleted. *fromname* is only displayed when *action* is **MOVE** or **DELETE**.

IST523I

This message explains the reason for the failure. Possible values of *reason* follow.

The second message in each message group is IST523I, and this message explains the reason for the failure. *reason* can be one of the following:

DUPLICATE STATION ID
An attempt was made to perform a DR CHANGE of IDBLK or IDNUM for a switched PU, but the resulting station ID was not unique in the network.

DR DELETE INVALID FOR INDEPENDENT LU
An attempt was made to perform a DR DELETE on an independent LU which is not associated to the adjacent link station specified on the FROM operand. This is not a valid request.

DR NOT SUPPORTED
An attempt was made to perform a DR function for a resource that does not support DR or this function of DR.

INSUFFICIENT STORAGE
VTAM was unable to allocate storage during a DR operation.

INVALID MACRO
A definition statement was read that is not a valid member in this type of definition deck. For example, a GROUP definition statement is not a valid member in a DR deck.

INVALID NAME
functiongroup is invalid for the PU or LU definition statement.

INVALID PARAMETER
An operand was found in a definition statement that is not valid or allowed.

INVALID RESOURCE CURRENT STATE
An attempt was made to move, delete, or change a resource whose current state will not allow it. This error occurs because the resource is not in an inactive, reset, release, or defined state.

Note: This reason can be issued for an active minor node when a VARY ACT,UPDATE=ALL command is entered for that resource's major node. This is probably not a definition error and usually requires no action. The most frequent cause is that an operand on a definition statement for the minor node *resource* in IST886I was changed using a VTAM command such as VARY LOGON, VARY NOLOGON, or MODIFY DEFAULTS before the VARY ACT,UPDATE=ALL command was entered for the major node. This occurs only when *action* in IST886I is CHANGE. Refer to *z/OS Communications Server: SNA Operation* for additional information about these commands.

INVALID RESOURCE TYPE
An attempt was made to move or delete a resource for which dynamic reconfiguration is not allowed. DR ADD, DELETE and MOVE may be performed for SNA type 1, 2, or 2.1 PUs and their subordinate LUs, as well as for dependent LUs and some independent LUs.

INVALID TO/FROM RESOURCE TYPE
An attempt was made to add, delete, or move a resource to or from a target resource that does not allow dynamic reconfiguration. DR ADD is allowed to lines and PUs. DR DELETE is allowed from lines and PUs. DR MOVE is allowed both to and from lines and PUs.

INVALID VALUE
An operand on a definition statement was found to have a coded value that is invalid for this operand.

INVALID VALUE FOR ADDR
The value coded in a PU definition statement for the ADDR operand was found to be a duplicate of a PU ADDR already under the target line.

LUGROUP CANNOT BE ADDED DYNAMICALLY
An attempt was made to dynamically add the LUGROUP operand to a PU definition statement. However, VTAM cannot add this operand using dynamic change. If you need to add this operand, use dynamic reconfiguration to delete the PU and then add it back with LUGROUP in the definition.

MACRO SEQUENCE ERROR
A DR definition deck contained definition statements that were out of sequence. Line targets must be followed by PUs; PU definition statements must be followed by LUs. PU definition statements must follow additions to lines, moves to lines, moves from lines, and deletions from lines. LU definition statements must follow additions to PUs, moves to PUs, and deletions from PUs.

MISSING MACRO
A DR definition deck was missing a definition statement. VBUILD definition statements are required. Null definition decks are invalid (a VBUILD definition statement with nothing following). Null function groups are invalid (a function group with no PU or LU definition statements).

MISSING NAME ON PU OR LU MACRO
A PU or LU definition statement in a DR definition deck did not have a name coded. The name is required on all PU and LU resources being added, deleted, or moved.

MISSING PARAMETER
A definition statement in a DR definition deck did not contain a required operand.

NO RESOURCES FOUND UNDER FROM LINE/PU
The line or PU resource for which a DR DELETE or DR MOVE function was requested had no resources under it.

OPERANDS COULD NOT BE ADDED DYNAMICALLY
An attempt was made to dynamically add APPN operands to a PU, but these APPN operands cannot be added dynamically to this PU. Instead, use dynamic reconfiguration to delete the PU and then add it back with the desired APPN operands in the definition.

PUDR=NO OR LUDR=NO CODED ON RESOURCE DEFINITION
An attempt was made to dynamically delete or move a resource that had either PUDR=NO or LUDR=NO coded on its definition statement. PUDR=NO or LUDR=NO indicates that no dynamic reconfiguration can be performed on the resource.

PUTYPE CANNOT BE CHANGED DYNAMICALLY
An attempt was made to change the value of PUTYPE on the specified resource.

RESOURCE NOT FOUND WHERE SPECIFIED
An attempt was made to delete or move a resource that does not exist under the specified target *fromname*.

SYNTAX ERROR
There is a syntax error in the DR definition deck.

TO/FROM RESOURCE NOT IN SAME NCP
An attempt was made to DR move a PU or LU from a line in an NCP to a line in a different NCP.

TO/FROM RESOURCE UNKNOWN
An attempt was made to add or move a resource to a target that does not exist or to delete or move a resource from a target that does not exist.

System Action:

- For MODIFY DR, processing of that command is terminated.
- For VARY DRDS, the *functiongroup* specified in IST368I is not processed. Any other function groups in the DR data set *drname* are processed.
- For VARY ACT, this resource and its subordinate resources are skipped, but the remaining definition statements are processed.

Operator Response: Enter a DISPLAY command for *resource* in message IST886I. Save the system log for problem determination.

If *reason* is **INSUFFICIENT STORAGE**, enter the DISPLAY BFRUSE or DISPLAY STORUSE command. Save the system log and request a dump for problem determination.

Programmer Response: Use the output from the operator to correct the command issued and the definition statements (if appropriate).

If *reason* is **INSUFFICIENT STORAGE**, increase storage as required. For insufficient storage errors, you might want to redefine your buffer pool or CSA start options. If the start option cannot be modified using the MODIFY VTAMOPTS command, you must modify the VTAM start options file (ATCSTRxx) and restart VTAM to use the start option.

- See the *z/OS Communications Server: SNA Migration* to determine the storage requirements for VTAM.
- See the *z/OS Communications Server: SNA Resource Definition Reference* for a description of VTAM start options.
- See the *z/OS Communications Server: SNA Operation* for information about the DISPLAY BFRUSE Command, the DISPLAY STORUSE Command, and the MODIFY VTAMOPTS Command.
- See the *z/OS Communications Server: SNA Network Implementation Guide* for an explanation and description of buffer pools and for general information on buffer pool specification and allocation.
- See the *z/OS Communications Server: SNA Diagnosis Vol 2, FFST Dumps and the VIT* for information about analyzing dumps and about analyzing storage using the VIT analysis tool, if external trace is active.

IST887I NO COS TABLE FOR *netid* **—** *text* **MAY BE USED**

Explanation: In response to a DISPLAY COS command for a PU type 4 or PU type 5 (identified in a previous message), VTAM attempted to display the class-of-service (COS) table for network *netid*. For a PU type 4, the COS table for *netid* was never defined on either a BUILD or NETWORK definition statement for the PU.

IF DISPLAY COS,NETID=*NETWORK is entered, this message is issued for the model network if no COSTAB keyword was coded on the model network statement. If COSTAB was coded on the model network statement, VTAM issues message IST862I.

text can be one of the following:

ISTSDCOS
ISTSDCOS, the default class-of-service table, may be used to identify the virtual routes to be used in network *netid*.

DEFAULT ALGORITHM
The default class-of-service table, ISTSDCOS, was not loaded either during VTAM initialization or by a subsequent MODIFY TABLE command. The default algorithm may be used to identify the virtual routes for use in network *netid*.

See the *z/OS Communications Server: SNA Network Implementation Guide*for information about the default routing algorithm, defining class-of-service tables, and class-of-service resolution. See the *z/OS Communications Server: SNA Resource Definition Reference* for an explanation of the COSTAB operand on the BUILD and NETWORK definition statements.

System Action: Processing continues.

Operator Response: None.

Programmer Response: None.

IST888I ADDR + LENGTH VALUES EXCEED STORAGE — LENGTH SET TO *n*

Explanation: VTAM issues this message in response to a DISPLAY NCPSTOR,TYPE=DUMPVEC command. The requested area of NCP storage is greater than can be displayed. The length of the display has been modified to *n*.

System Action: The command will be executed with the modified length.

Operator Response: None.

Programmer Response: None.

IST889I SID = *sessionid*

Explanation: This message is part of a message group. The first message in the group is either IST663I or IST1774I. See the explanation of that message for a complete description.

IST890I AUTOLOGON SESSION SETUP FAILED

Explanation: VTAM issues this message as part of a group of messages. The first message in the group is IST663I. See the explanation of that message for a complete description.

IST891I *netid.nodename1[.nodename2]* **GENERATED FAILURE NOTIFICATION**

Explanation: VTAM issues this message as part of a subgroup of messages to provide extended sense data when a session initiation or session termination failure occurs. This message subgroup is displayed in a message group headed by IST663I.

A complete description of the message subgroup follows.

```
 IST891I  netid.nodename1[.nodename2] GENERATED FAILURE NOTIFICATION
[IST892I  resourcename ORIGINATED FAILURE NOTIFICATION]
[IST893I  ORIGINAL FAILING REQUEST IS request]
```

IST891I

netid.nodename1 is the network-qualified name of the NCP, CP, or SSCP that detected the error.

nodename2, if displayed, is the name of the NCP or physical unit that generated extended-sense data in one of the following situations:

– When a failure request/response was received from an adjacent migration SSCP.

– After collecting failure notification from one or more adjacent SSCPs during trial and error routing.

IST892I

If displayed, this message identifies a related resource (*resourcename*) used to identify the source of the error.

For example, if a gateway NCP rejected an RNAA or SETCV request, the gateway NCP name originated the failure notification. The SSCP that received the negative response is the one that generated the failure notification; therefore, it originated the termination procedure.

IST893I

If displayed, this message identifies the request that was failed by the source of the error.

request identifies the original request that failed. For example, if a gateway NCP rejected an RNAA or SETCV request as part of CDINIT processing, *request* would be **RNAA**.

System Action: Session setup processing fails.

Operator Response: Save the system log for problem determination.

Programmer Response: Coordinate the debugging of the problem with the system programmer responsible for the originating termination procedure.

See message IST663I for additional information. See *SNA Network Product Formats* for a description of the extended sense data (X'35') control vector.

IST892I *resourcename* **ORIGINATED FAILURE NOTIFICATION**

Explanation: This message is part of a message subgroup. The first message of the subgroup is IST891I. See the explanation of that message for a complete description.

IST893I ORIGINAL FAILING REQUEST IS *request*

Explanation: This message is part of the message subgroup. The first message of the subgroup is IST891I. See the explanation of that message for a complete description.

IST894I ADJSSCPS TRIED FAILURE SENSE ADJSSCPS TRIED FAILURE SENSE

Explanation: VTAM issues this message as part of a subgroup of messages to provide adjacent SSCP table information in response to a DISPLAY SRCHINFO,SID command or when a session initiation fails for either of the following reasons:

- Trial and error routing using an adjacent SSCP table has failed. The destination LU was found by an SSCP, but that *sscpname* rejected the session initiation with *sense*.
- Trial and error routing using an adjacent SSCP table has exhausted the table. All adjacent SSCPs were tried, but the destination LU was not known to any of the SSCPs.

This message subgroup is displayed in a message group headed by IST663I or IST1531I. A complete description of the message subgroup follows.

```
IST894I  ADJSSCPS TRIED  FAILURE SENSE   ADJSSCPS TRIED  FAILURE SENSE
IST895I     sscpname        sense          [sscpname     sense]
⋮
```

IST894I

This message is a header message for information displayed in IST895I.

IST895I

This message lists the names of the adjacent SSCPs through which trial and error routing was attempted. The SSCP names appear in the order in which they were tried.

sscpname is the name of the adjacent SSCP.

If *sscpname* is **ISTAPNCP**, this is an entry specified in the ADJSSCP table and represents a search of the APPN network. See the *z/OS Communications Server: SNA Network Implementation Guide* for more information.

sense is the sense code and indicates the cause of the failure. See the *z/OS Communications Server: IP and SNA Codes* for a description of *sense*.

System Action: The session setup failed.

Operator Response: Save the system log for problem determination and provide the files used for system definition.

Programmer Response: Use the output and system definition files provided to assist in determining the cause of the problem. (You may need to work with system programmers in other networks to determine the adjacent SSCP tables used in another network to define the system.)

IST895I *sscpname sense* **[***sscpname sense***]**

Explanation: This message is part of a message subgroup. The first message of the subgroup is IST894I. See the explanation of that message for a complete description.

IST896I AUTOLOGON WILL BE RETRIED WHEN CONTROLLING PLU IS AVAILABLE

Explanation: VTAM issues this message when an automatic logon (autologon) session initiation fails because the controlling PLU is not available. The initiate request generated by an autologon has requested notification when the specified resource becomes available. When the resource becomes available, notification will occur (see message IST899I), and the autologons will be re-attempted.

System Action: The session setup fails.

Operator Response: If the problem is with the SSCP-controlling PLU session, start the controlling PLU (SETLOGON START). You may need to work with a network operator in another domain or network when the controlling PLU does not reside in your domain.

Programmer Response: None.

IST897I [NONDISRUPTIVE] LOAD OF *ncpname* **[WITH** *loadmodname***] STARTED**

Explanation: VTAM is initiating a load or nondisruptive load of communications controller *ncpname* with NCP load module *loadmodname*. *loadmodname* is included in the message when the load module name differs from *ncpname*.

System Action: The communication controller is being loaded.

Operator Response: None.

Programmer Response: None.

IST898I GWSELECT = {YES|NO}

Explanation: VTAM issues this message in response to a DISPLAY ID command for a cross network CDRM. This message indicates whether the host CDRM will perform gateway NCP selection when processing an LU-LU session request to or from the displayed CDRM.

A value of **YES** indicates that gateway NCP selection will be performed by the host CDRM.

A value of **NO** indicates that gateway NCP selection will not be performed by the host CDRM.

System Action: Processing continues.

Operator Response: None.

Programmer Response: None.

IST899I RETRY OF AUTOLOGON(S) TO *pluname* **{***action***}**

Explanation: VTAM issues this message when a previous automatic logon (autologon) attempt failed because a resource required for an autologon session setup was not available. IST896I is issued prior to this message and indicates that the autologon will be retried when the resource becomes available.

pluname is the network-qualified name of the resource.

action indicates how the system will handle the autologon attempt.

IN PROGRESS
Indicates that the retry of autologons to *pluname* is in progress. Either a controlling PLU was started or an SSCP-SSCP or CP-CP session has become available. Autologons that previously failed because a resource was not available are being retried.

WILL NOT OCCUR
Indicates that the retry of autologons will not occur if notification was received for the deactivation of the CDRM.

FOR AUTOTI
A retry will be attempted for a controlling PLU whose timer, set by START option AUTOTI, has expired.

System Action: Processing continues.

Operator Response: None.

Programmer Response: None.

IST919I NODE *nodename* **NO LONGER HAS CONTROLLING LU [***luname***]**

Explanation: Processing of the VARY NOLOGON command has been completed. Node *nodename* will no longer be automatically logged on to *luname* when *nodename* is not in session with or queued for a session with another PLU. *luname* may or may not be included depending on how the LU is specified in the NOLOGON command.

System Action: Processing continues.

Operator Response: None.

Programmer Response: None.

IST920I *bpid* **[Q] [F] BUFF SIZE** *bufsize* **EXP INCREMENT** *increment*

Explanation: This message is the first in a subgroup of messages that VTAM issues in response to a DISPLAY BFRUSE command. A complete description of the message subgroup follows.

```
 IST350I  DISPLAY TYPE = BUFFER POOL DATA
 IST920I  bpid [Q] [F] BUFF SIZE  bufsize     EXP INCREMENT   increment
 IST921I               TIMES EXP  times       EXP/CONT THRESH exp/contthresh
 IST922I               CURR TOTAL curtot      CURR AVAILABLE  curavail
 IST923I               MAX TOTAL  maxtot      MAX USED        maxused
[IST989I               EXP LIMIT  explimit    BUFFS REQUESTED buffers]
[IST924I  ----------------------------------------------------------------------]
```

IST920I

This message subgroup is repeated for each of the VTAM buffer pools specified with the BUFFER option.

IST920I

bpid is the name of the buffer pool. See the *z/OS Communications Server: SNA Network Implementation Guide* for an explanation and description of buffer pools and for general information on buffer pool specification and allocation.

Q, if present, indicates a request is queued for the pool. This field is usually blank.

F, if present, indicates dynamic buffering has failed. This field is usually blank.

bufsize is a decimal value that indicates the number of bytes in each buffer.

For IOBUF an overhead value has been added to the *bufsize* value in this message. See the *z/OS Communications Server: SNA Resource Definition Reference* for more information about buffer pool sizes.

increment indicates the number of buffers to be added to the pool during dynamic expansion.

Buffers are added in full pages; therefore, the number may be larger than the number (*xpanno*) used to define the buffer pool in the buffer pool's start option. This field will contain ***NA*** if dynamic buffering is suppressed.

IST921I

times indicates the number of times the pool has been expanded since the last buffer pool trace record was written.

exp indicates when to trigger expansion, and is derived from the buffer pool start option's *xpanlim* parameter.

If the number of buffers available falls below *xpnpt*, VTAM adds buffers. This field will contain ***NA*** if dynamic buffering is suppressed. Note that this may have happened because the pool expansion limit (*xpanlim*) is less than or equal to the base number of buffers (the *baseno* specified in the buffer pool's start option).

contthresh is a value that indicates when to trigger contractions.

If the number of available buffers in the pool (*curavl*) becomes larger than *contthresh* and some of the buffers have been dynamically obtained via pool expansion, VTAM will return available dynamically obtained buffers to the operating system. For an available buffer to be released, all buffers on the page must be available, since buffers are released by page. If there are no dynamically obtained buffers, this field will contain ***NA***.

IST922I

curtot indicates the total number of buffers in the pool.

curavail indicates the available buffers in the pool that are not in use.

IST923I

maxtot indicates the maximum number of buffers contained in the pool at any one time since the last buffer pool trace record was written.

maxused indicates the maximum number of buffers that have been in use at one time since the last buffer pool trace record was written.

IST989I

This message is issued if the expansion failed or requests are queued. Message IST989I is always issued for the IO00 pool. It is only issued for the other pools if **Q** is present.

explimit indicates the maximum number of buffers allowed for this buffer pool.

It is derived from the *xpanlim* value specified on the buffer pool's start option when VTAM was started. If the *xpanlim* value is not specified, VTAM will use the maximum number of buffers in available storage. The value displayed is the maximum addressable storage of 2147483647. This field will contain ***NA*** if dynamic buffering is suppressed.

buffers indicates the total number of buffers requested for all outstanding queued requests. This field will be zero if no queued requests exist.

Note: VTAM may issue an additional message subgroup with this group of messages. See the explanation of message IST449I for a complete description of this subgroup.

System Action: Processing continues.

Operator Response: None.

Programmer Response: None.

IST921I **TIMES EXP** *times* **EXP/CONT THRESH** *exp/contthresh*

Explanation: VTAM issues this message as part of a message group. The first message in the group is IST920I. See the explanation of that message for a complete description.

IST922I **CURR TOTAL** *curtot* **CURR AVAILABLE** *curavail*

Explanation: This message is part of a message group. The first message in the group is IST920I. See the explanation of that message for a complete description.

IST923I **MAX TOTAL** *maxtot* **MAX USED** *maxused*

Explanation: This message is part of a message group. The first message in the group is IST920I. See the explanation of that message for a complete description.

IST924I **----------**

Explanation: This message is a line separator and is part of several different message groups. It is used to improve readability or to separate types of information. See the explanation of the first message in the group for an example of how this message is used in each group.

IST925I **DYNAMIC PATH DEFINITION** *pathname* **STATUS =** *status*

Explanation: VTAM issues this message in response to a DISPLAY ID command for an NCP, for which a dynamic path definition exists, or for a host PU, for which a normal PATH deck or a dynamic path definition exists. Message IST925I is issued once for each path name in the dynamic path definition showing the path name *pathname* and its status.

status can be any of the following:

RESET The initial state

DEFND
The path information has been processed by the system

PLOAD
The dynamic path update member (NCPPATH) is being loaded

ACTIV The path table or dynamic path update member is active, that is, loaded.

System Action: Processing continues.

Operator Response: None.

Programmer Response: None.

IST926I **PATH FOR** *pathname* **IGNORED — NODE** *nodename* **NOT FOUND/INVALID**

Explanation: VTAM issues this message in response to an error during the processing of one of the following commands:

- VARY ACT,ID=*ncpname* where a NEWPATH operand is found during processing of the PCCU definition statement
- VARY ACT,ID=*ncpname*,NEWPATH=*pathname*
- VARY ACT,ID=*pathname*

During activation of the dynamic path update set that includes *pathname*, the resource *nodename* either could not be found or was not valid.

System Action: The dynamic path update of *pathname* is ignored. Processing of the dynamic path update set that includes *pathname* continues.

Operator Response: None.

Programmer Response: None.

IST927I ERROR FOR *ncpname.pathname* **DSA** *destsubarea text* **CODE** *code*

Explanation: VTAM issues this message in response to an error during the processing of one of the following commands:

- VARY ACT,ID=*ncpname* where a NEWPATH operand is found during processing of the PCCU definition statement
- VARY ACT,ID=*ncpname*,NEWPATH=*pathname*
- VARY ACT,ID=*pathname*

During activation of the dynamic path update set that includes *pathname*, a negative response was received from the SETCV RU request to NCP *ncpname*.

The destination subarea (DSA) is indicated by *destsubarea*.

The combination of *text* and *code* indicates the cause of the error.

- If *text* is **ERN** *ern*, possible codes include:

  CODE 2
  Control block allocation failed for explicit route number *ern*.

  TGBXTRA or PATHEXT in the NCP BUILD or NETWORK definition statement probably needs to be increased. Refer to *NCP, SSP, and EP Resource Definition Reference* SC31-6224 for guidelines on coding TGBXTRA and PATHTEXT in the BUILD and NETWORK definition statements.

  CODE 3
  Explicit route number *ern* is currently operative.

  CODE 10
  Adjacent subarea specified for explicit route number *ern* is larger than SALIMIT.

  CODE 11
  Explicit route number *ern* conflicts with ERLIMIT.

- If *text* is **NETID** *netid*, possible codes include:

  CODE 1
  Network ID *netid* is invalid.

  CODE 2
  Control block allocation failed for network ID *netid*.

  TGBXTRA or PATHEXT in the NCP BUILD or NETWORK definition statement probably needs to be increased. Refer to *NCP, SSP, and EP Resource Definition Reference* SC31-6224 for guidelines on coding TGBXTRA and PATHTEXT in the BUILD and NETWORK definition statements.

  CODE 8
  Messages for the rejected ER, VR or VRPWS subfields in network ID *netid* follow.

  CODE 9
  Destination subarea is larger than SALIMIT specified for the network ID *netid*.

- If *text* is **VRN/ERN** *vrn/ern*, possible codes include:

  CODE 4
  Virtual route number *vrn* is mapped to an undefined explicit route number *ern*.

  CODE 5
  Virtual route number *vrn* is mapped to a different explicit route (not *ern*).

  CODE 11
  Virtual route number *vrn* is mapped to an explicit route number *ern* that conflicts with ERLIMIT.

- If *text* is **VRN/TPF** *vrn/tpf*, possible codes include:

  CODE 2
  Control block allocation failed for virtual route number/transmission priority field *vrn*/*tpf*.

  TGBXTRA or PATHEXT in the NCP BUILD or NETWORK definition statement probably needs to be increased. Refer to *NCP, SSP, and EP Resource Definition Reference* SC31-6224 for guidelines on coding TGBXTRA and PATHTEXT in the BUILD and NETWORK definition statements.

CODE 6
No corresponding virtual route (VR) exists in that path definition for virtual route number/transmission priority field *vrn*/*tpf*.

CODE 7
Virtual route number/transmission priority field *vrn*/*tpf* is already active.

See the *z/OS Communications Server: SNA Resource Definition Reference* for the correct use of VTAM operands on NCP definition statements. See the *z/OS Communications Server: SNA Network Implementation Guide* for an explanation of dynamic path update.

System Action: The dynamic path update of *pathname* is ignored. Processing of the dynamic path update set that includes *pathname* continues.

Operator Response: Save the system log for problem determination.

Programmer Response: Correct the dynamic path update set and retry the command that failed.

IST928I DELETER KEYWORD FOR *pathname* **IGNORED**

Explanation: This message is the first in a group of messages that VTAM issues in response to the following commands:

- VARY ACT,ID=*ncpname* where a NEWPATH operand is found during processing of the PCCU definition statement
- VARY ACT,ID=*ncpname*,NEWPATH=*pathname*
- VARY ACT,ID=*pathname*

A complete description of the group follows.

```
IST928I  DELETER KEYWORD FOR pathname IGNORED
IST523I  REASON = reason
```

During processing of the VARY command, a DELETER=*ern* operand was encountered in the dynamic path update set that includes *pathname*.

pathname refers to the label that is in error in the PATH definition statement (*****NA***** if no label exists).

reason is one of the following:

DEST SUBAREA destsa INVALID
The dynamic path update set that includes *pathname* is ignored because the *destsa* name is not valid.

ER ern IS OPERATIVE
Explicit route *ern* is currently operative and cannot be deleted.

ER ern NOT FOUND
The explicit route *ern* is not found and cannot be deleted.

System Action: The dynamic path update of *pathname* is ignored. Processing of the dynamic path update set that includes *pathname* continues.

Operator Response:

ER IS OPERATIVE
The ER route definition in VTAM/NCP can be replaced or deleted only if the explicit route is inoperative (a status of INOP).

Deactivate the physical elements and links within the route.

Programmer Response: None.

IST929I LOAD OF DYNAMIC PATH DEFINITION *ncpname.pathname* **COMPLETE**

Explanation: VTAM issues this message in response to one of the following commands:

- VARY ACT,ID=*ncpname* where a NEWPATH operand is found during processing of the PCCU definition statement
- VARY ACT,ID=*ncpname*,NEWPATH=*pathname*

IST930I

- VARY ACT,ID=*pathname*,

The load of NCP *ncpname* with the dynamic path update set that includes *pathname* is complete.

System Action: Processing continues.

Operator Response: None.

Programmer Response: None.

IST930I *nodename1* **—** *nodename2* **SESSION USING** *percentage* **OF** *bp***BUF**

Explanation: VTAM detected that the session indicated is using 10 percent or greater of the *bp*BUF buffer pool.

Note: This message is percolated. See “Message rerouting and percolation” on page 710 for additional information.

nodename1 and *nodename2* are the session partners for the session using the indicated percentage of the pool. If VTAM does not know a node name, the node ID is presented in the form *subarea*/*element*, where *subarea* is the subarea portion of the network address and *element* is the element portion of the network address. Both *subarea* and *element* addresses are given in decimal form.

*bp*BUF is the name of the buffer pool.

percentage is the percentage of this buffer pool used by this session.

If the session between *nodename1* and *nodename2* is using a large percentage of the buffer pool, one of the following conditions probably exists:

- Either *nodename1* or *nodename2* is malfunctioning. This could be a hardware, microcode, or application program error that causes VTAM to be flooded with data.
- Neither *nodename1* nor *nodename2* is malfunctioning, but a large amount of data is being transmitted on this session with no pacing in effect.
- A resource with many sub-resources is being activated or deactivated. This requires a large concurrent number of I/O buffers.
- The maximum size of the I/O buffer pool has been defined too small or the maximum amount of CSA that VTAM is allowed to obtain is too small. These are the expansion limit parameters on the IOBUF start option and the CSALIMIT start option.

System Action: Message IST154I, IST1098I, or IST1099I is displayed with this message.

- If message IST154I is displayed, the buffer pool is not expanded at this time. When more storage becomes available, VTAM may try again to expand the buffer pool. VTAM may be adversely affected by this failure to obtain more buffers.
- If message IST1098I or IST1099I is displayed, processing continues.
  - If the session is an SSCP-LU session, then the LU is deactivated, and message IST1098I is displayed.
  - If the session is an SSCP-PU session and the PU is a PU other than an NCP, then the PU is deactivated and message IST1098I is displayed. Since activation or deactivation of large NCPs can cause situations where large number of I/O buffers are properly in use nad NCPs are not known to cause HOT I/O situations, NCP PUs will not be automatically activated.
  - If the session is an LU-LU session (including CP-CP) then the session is terminated, and message IST1099I is displayed.

Once VTAM has determined that a session is using greater than 10 percent of the buffer pool, a determination is made whether to automatically terminate the session or inactivate the LU. If the percentage is greater than or equal to the HOTIOTRM start option value, and the session type is LU-LU, VTAM initiates termination of all the sessions between *nodename1* and *nodename2*. VTAM issues message IST1099I when sessions are automatically terminated. If the percentage is greater than or equal to the HOTIOTRM start option value, and the session type is SSCP-LU or SSCP-PU (and the PU is not an NCP), VTAM initiates inactivation of the LU or PU. VTAM issues message IST1098I when automatic inactivation has been initiated.

Operator Response:

- If it appears that the problem is caused by a malfunctioning device LU, try to deactivate the device using the VARY INACT command. In extreme cases, you might have to physically disconnect or power-off the device.

- If it appears that the problem is caused by a malfunctioning PU and that PU was not automatically inactivated (HOTIOTRM was not specified), try to deactivate the device using the VARY INACT command. In extreme cases, you might have to physically disconnect or power-off the device.
- If it appears that the problem is caused by an activation or deactivation of an NCP or other PU, an attempt can be made to reactivate the PU SCOPE=ONLY. Once the PU is active, each line can then be VARYed ACTive. Activating resources in this order, will lesson the peak demand for I/O buffers.
- If VTAM continues to issue this message, enter the DISPLAY BFRUSE command. Save the system log and request a dump for problem determination.

Programmer Response:

- Ensure that session pacing is in effect for the session using the largest percentage of the buffer pool. The BIND request unit contains the values used for each session. See the *z/OS Communications Server: SNA Network Implementation Guide* for more information about session pacing.
- If message IST154I is displayed before this message, and the session between *nodename1* and *nodename2* is not using a large percentage of the buffer pool, the size of the buffer pool was probably underestimated.
- If message IST154I was issued, use the explanation of *code* in that message to determine which buffer pool you need to modify.
- You might want to redefine your buffer pool or CSA start options. If the start option cannot be modified using the MODIFY VTAMOPTS command, you must modify the VTAM start options file (ATCSTRxx) and restart VTAM to use the start option.
- If you want VTAM to automatically terminate these sessions, specify the HOTIOTRM start option with a value that is less than or equal to *percentage*. This start option can be modified using the MODIFY VTAMOPTS command.
- For additional information, refer to:
  - The *z/OS Communications Server: SNA Network Implementation Guide* for an explanation and description of buffer pools and for general information on buffer pool specification and allocation.
  - The *z/OS Communications Server: SNA Resource Definition Reference* for more information on the HOTIOTRM start option and other VTAM start options.
  - The *z/OS Communications Server: SNA Operation* for information about the DISPLAY BFRUSE Command, the DISPLAY STORUSE Command, and the MODIFY VTAMOPTS Command.
  - The *z/OS Communications Server: SNA Diagnosis Vol 2, FFST Dumps and the VIT* for information about analyzing dumps and about analyzing storage using the VIT analysis tool, if external trace is active.

IST931I SYMPTOM STRING = *symptomstring*

Explanation: VTAM issues this message to display a symptom string when VTAM recovers from an ABEND. VTAM repeats this message until the entire *symptomstring* is displayed and then issues message IST314I to end the message group.

symptomstring is the result of a VTAM ABEND and describes the ABEND in question. *symptomstring* contains **AB/***xxxxx* and **RIDS/***xxxxxxxx***#R** or **#L**.

- If the RIDS element contains a #R, this is the name of the recovery module.
- #L identifies the failing load module.

System Action: Processing continues.

Operator Response: Message IST413I may also be displayed and can provide additional information. Save the system log for problem determination. For more information on interpreting symptom strings, see the ABEND Procedure in *z/OS Communications Server: SNA Diagnosis Vol 1, Techniques and Procedures*.

Programmer Response: Use the information in the system string and message IST413I, if displayed, to assist you in determining the cause of the problem.

IST932E FAILURE OCCURRED DURING TAKEOVER OF *luname***, SENSE=** *sense*

Explanation: While processing a BFSESSINFO RU during SSCP takeover of LU *luname*, VTAM was unable to record the addresses associated with a session.

See the *z/OS Communications Server: IP and SNA Codes* for a description of *sense*.

System Action: Sessions associated with LU *luname* are terminated.

Operator Response:

- Deactivate and reactivate the PU.
- If insufficient storage is a frequent problem, enter a DISPLAY BFRUSE or DISPLAY STORUSE command. Save the system log and request a dump for problem determination.

Programmer Response: Verify that the operator entered the buffer pool or CSA start options as specified in the start procedures.

Increase storage as required. For insufficient storage errors, you might want to redefine your buffer pool or CSA limits. If the start option cannot be modified using the MODIFY VTAMOPTS command, you must modify the VTAM start options file (ATCSTRxx) and restart VTAM to use the start option.

- See the *z/OS Communications Server: SNA Migration* to determine the storage requirements for VTAM.
- See the *z/OS Communications Server: SNA Resource Definition Reference* for a description of VTAM start options.
- See the *z/OS Communications Server: SNA Operation* for information about the DISPLAY BFRUSE Command, the DISPLAY STORUSE Command, and the MODIFY VTAMOPTS Command.
- See the *z/OS Communications Server: SNA Network Implementation Guide* for an explanation and description of buffer pools and for general information on buffer pool specification and allocation.
- See the *z/OS Communications Server: SNA Diagnosis Vol 2, FFST Dumps and the VIT* for information about analyzing dumps and about analyzing storage using the VIT analysis tool, if external trace is active.

IST933I LOGMODE=*logmode***, COS=***cosentry* **[(FROM OLU)]**

Explanation: This message is part of a message group. See the explanation of message IST879I or IST1489I for a complete description of the message group.

System Action: Processing continues.

Operator Response: None.

Programmer Response: None.

IST934I DLOGMOD=*dlogmode* **USS LANGTAB=***langtab*

Explanation: This message is part of a group of messages that VTAM issues in response to a DISPLAY ID command for an application minor node or LU.

dlogmode is the default logon mode to be used by the resource if a logon mode name is not provided for a session initiation request. If no default logon mode was specified, VTAM issues ***NA*** for *dlogmode*.

langtab is the name of the language table defined for this LU. If no value was specified for *langtab* or if the DISPLAY ID command was not entered for an LU, VTAM issues ***NA*** for *langtab*.

System Action: Processing continues.

Operator Response: None.

Programmer Response: None.

IST935I ORIGIN=*ncpname***, NETID=***netid***, ID=***resourcename*

Explanation: VTAM issues this message as part of a group of messages. The first message in the group is IST863I. See the explanation of that message for a complete description.

IST936I ANSWER MODE = *answermode*

Explanation: This message displays the direction (or state) of a line.

answermode can be one of the following:

RESET
Initial state (for example, the line is not active).

ENABLED
The specified line is accepting incoming calls.

DISABLED
The specified line is not accepting incoming calls.

PENDING DACTCONNIN RESPONSE
A response for a DACTCONNIN RU to disable the specified line from accepting incoming calls is pending.

NEGATIVE DACTCONNIN RESPONSE
A negative response for a DACTCONNIN RU to disable the specified line from accepting incoming calls was received.

PENDING ACTCONNIN RESPONSE
A response for an ACTCONNIN RU to enable the specified line to accept incoming calls is pending.

NEGATIVE ACTCONNIN RESPONSE
A negative response for an ACTCONNIN RU to enable the specified line to accept incoming calls was received.

System Action: Processing continues.

Operator Response: If *answermode* is **NEGATIVE ACTCONNIN RESPONSE**, save the system log for problem determination.

For all other values of *answermode*, no response is necessary.

Programmer Response: If *answermode* is **NEGATIVE ACTCONNIN RESPONSE**, verify that the configuration is valid and that the NCP responded correctly. This can be determined by referring to the NCP generation and matching the line name with what was generated.

IST937A *loadmodname* **CORRELATOR MISMATCH** *correlator1* **—** *correlator2* **REPLY 'RELOAD', 'INACT', OR 'IGNORE'**

Explanation: During the activation of NCP load module *loadmodname*, the generated correlator *correlator1* did not match the correlator *correlator2* loaded in the communication controller.

VFYC=YES was specified in the NCP's PCCU definition statement. The operator may, therefore, reload the communication controller, terminate the activation, or ignore the mismatch.

System Action: Processing continues. Message IST937A is reissued until a correct response is entered.

Operator Response: Reply 'RELOAD' to reload the communication controller. Other VTAMs sharing the communication controller will be affected when it is reloaded.

Reply 'INACT' to terminate the activation of the communication controller. This will result in a load module mismatch between the load module that is active for this VTAM and the load module that is active for another VTAM that is sharing the same communication controller.

Reply 'IGNORE' to ignore the mismatch and continue activation. However, the mismatch may be a user error and ignoring it could lead to potential problems.

Programmer Response: None.

Note: For additional information on how to respond to this message, see "Responding to a VTAM message" on page 2.

IST938I **OPEN ACB REJECTED, CANNOT LOAD** *phasename*

Explanation: During an OPEN ACB procedure, the ALOAD routine could not dynamically load phase *phasename*.

System Action: The OPEN ACB procedure fails. This message will follow IST025I.

Operator Response: See message IST025I for additional information and recommended actions.

Programmer Response: None.

IST939I **VARY NOLOGON HAD NO EFFECT —** *applname* **NOT FOUND FOR** *nodename*

Explanation: VTAM issues this message in response to a VARY NOLOGON command. The command failed because a controlling relationship existed for *nodename* with a different application than the specified *applname*.

System Action: Processing continues.

Operator Response: Enter a DISPLAY ID command for *nodename* to verify that a controlling relationship exists. Reenter the VARY NOLOGON command with the indicated *applname*.

Programmer Response: None.

IST940I *verid*

Explanation: This message is part of a message group. The first message in the group is IST680I. See the explanation of that message for a complete description.

IST946I BASENO *n* GREATER OR EQUAL TO XPANLIM *limit* BUFFERS

Explanation: This message is the first in a group of messages. A full description of the message group follows.

```
IST946I  BASENO n GREATER OR EQUAL TO XPANLIM limit BUFFERS
IST947I  STATIC BUFFERING ASSUMED FOR bpBUF
```

While processing the start option for buffer pool *bp* and converting the input expansion limit to buffers, VTAM determined that the expansion limit was less than the base number of buffers in the pool. Although the initial number of buffers will be allocated to the pool, the pool will not be able to expand because any expansion would force the pool above its expansion limit. As a result, the values for *xpanpt* and *xpanno* entered for buffer pool *bp* will be ignored and the buffer pool will operate without dynamic expansion.

n is the base number of buffers allocated to the buffer pool. This is the value of the *baseno* operand in the start option for the buffer pool.

limit is the maximum number of buffers that will fit in the storage specified by the *xpanlim* operand in the start option for the buffer pool. See the *z/OS Communications Server: SNA Resource Definition Reference* for a description of the buffer pool start options.

bp is the name of the buffer pool. See the *z/OS Communications Server: SNA Network Implementation Guide* for an explanation and description of buffer pools and for general information on buffer pool specification and allocation.

System Action: Processing continues. The buffer pool will operate with no dynamic buffering. ***NA*** will be displayed for the expansion threshold if DISPLAY BFRUSE commands are entered for the buffer pool.

Operator Response: Save the system log for problem determination. You might have to restart VTAM.

Programmer Response: Determine whether dynamic buffering is desired for buffer pool *bp*. If so, restart VTAM with appropriate values for *baseno* and *xpanlim* for the *bp* buffer pool. Otherwise, no action is necessary.

IST947I STATIC BUFFERING ASSUMED FOR *bp*BUF

Explanation: This message is part of a group of messages. The first message in the group is IST946I. See the explanation of that message for a complete description.

IST949I ISTMGC10 IN VTAMLIB *reason* - VTAM PROCESSING CONTINUES

Explanation: VTAM could not load the default filter table because of *reason*.

reason can be one of the following:

NOT FOUND
The table could not be located in the VTAMLIB.

NOT LOADED
There was not enough storage available to load the table.

NOT VALID
ISTMGC10 did not have a valid type ID.

System Action: VTAM ignores the load request and continues the initialization.

Operator Response: Save the system log for problem determination.

Programmer Response: Verify if the table was intentionally left empty or was intentionally not loaded into the

system library. If it was not, follow the procedure outlined below for *reason*.

If *reason* is **NOT FOUND**, halt VTAM, load the table into the system library, and restart VTAM.

If *reason* is **NOT LOADED**, increase storage as required and reload the table.

If *reason* is **NOT VALID**, verify that ISTMGC10 was created with the correct macros and that the table type is correct. If not, halt VTAM and then restart it with a valid version of the table in the system library.

IST950I VCNS=YES

Explanation: This message is part of a group of messages that VTAM issues in response to a DISPLAY ID command for an application program. This message identifies that this application is a VTAM Common Network Services (VCNS) user.

System Action: Processing continues.

Operator Response: None.

Programmer Response: None.

IST951I DISPLAY DISK INFORMATION FOR *ncpname*

Explanation: This message is the first in a group of messages that VTAM issues in response to a DISPLAY DISK command. A description of the message group follows.

```
 IST951I   DISPLAY DISK INFORMATION FOR ncpname
[IST957I  NO NCP LOAD MODULE OR DUMP ON DISK]
[IST952I  DUMP NAME     DATE      TIME
 IST953I   dumpname      date      time]
⋮
[IST954I  LOAD MODULE   DATE     TIME   STORE STATUS  [ACTIVE]
 IST955I   loadmodname   date     time      status     [YES|NO]]
⋮
[IST924I  -------------------------------------------------------]
[IST1065I LOAD MODULE  REQUESTED IPL  ESTIMATED IPL
 IST1066I  load_module  requested_time estimated_time]
⋮
 IST965I   AUTO DUMP/LOAD:  {YES|NO}
 IST314I   END
```

IST951I

This message serves as a header line for the display and identifies the NCP *ncpname* for which the information is displayed.

IST957I

If there is no information on the disk to display, this message follows IST951I.

IST952I and IST953I subgroup

If there is information on the disk to display, VTAM issues this subgroup if dump information is available. IST953I is repeated for each dump on the disk. See the explanation of IST952I on page 284 for additional information on this subgroup.

IST954I and IST955I subgroup

If there is information on the disk to display, VTAM issues this subgroup if load module information is available. IST955I is repeated for each load module on the disk. See the explanation of IST954I on page 284 for additional information on this subgroup.

IST924I

VTAM issues this message to improve the readability of the display.

IST1065I and **IST1066I**

If there is information on the disk to display, VTAM issues this subgroup if an IPL has been scheduled for at least one load module on the disk. IST1066I is repeated for each load module on the disk. See the explanation of IST1065I on page 337 for additional information on this subgroup.

IST965I

This message is issued to indicate whether the 3720 or 3745 Communication Controller will accept an automatic re-IPL if the NCP abends. If IST965I indicates that an automatic dump and load will occur, the load module that is active in the communication controller will be reloaded.

System Action: Processing continues.

Operator Response: None.

Programmer Response: None.

IST952I DUMP NAME DATE TIME

Explanation: VTAM issues this message as part of a subgroup of messages in response to a DISPLAY DISK command.

This message subgroup is displayed in a message group headed by IST951I. See the explanation of that message for additional information.

If there is information on the disk to display, VTAM issues this subgroup if dump information is available. A complete description of the message subgroup follows.

```
IST952I  DUMP NAME     DATE  TIME
IST953I  dumpname      date  time
```

VTAM issues message IST953I for each NCP dump on disk. This message contains the following information:

dumpname
: The name of the NCP dump on the disk

date
: The date the dump was loaded to the disk

time
: The time the dump was dumped onto the disk.

System Action: Processing continues.

Operator Response: None.

Programmer Response: None.

IST953I *dumpname date time*

Explanation: VTAM issues this message as part of a message subgroup. The first message in the subgroup is IST952I. See the explanation of that message for a complete description.

IST954I LOAD MODULE DATE TIME STORE STATUS [ACTIVE]

Explanation: VTAM issues this message as part of a subgroup of messages in response to a DISPLAY DISK command.

This message subgroup is displayed in a message group headed by IST951I. See the explanation of that message for additional information.

If there is information on the disk to display, VTAM issues this subgroup if load module information is available. A complete description of the message subgroup follows.

```
IST954I  LOAD MODULE DATE   TIME  STORE STATUS   [ACTIVE]
IST955I  loadmodname date   time     status      [YES|NO]
```

VTAM issues message IST955I for each load module that is displayed. It contains the following information:

loadmodname
: The name of the load module on the disk.

date
: The date the load module was stored on the disk.

time
The time the load module was stored on the disk.

status
The store status of the load module. *status* will be one of the following:

STORED
The load module is completely stored.

STORING
The load module is currently in the process of being stored.

SUSPENDED
The load module is currently in the process of being stored; however, no information has been received by MOSS in the last five minutes.

[YES|NO]
ACTIVE is **YES** when *loadmodname* is the load module currently active on the disk. This means the load module is next to load on the disk.

ACTIVE is **NO** when *loadmodname* is not the load module currently active in the disk.

[YES|NO] is displayed only when at least one load module on the disk is active.

System Action: Processing continues.

Operator Response: None.

Programmer Response: None.

IST955I *loadmodname date time status* **[YES|NO]**

Explanation: VTAM issues this message as part of a message subgroup. The first message in the subgroup is IST954I. See the explanation of that message for a complete description.

IST956I **{PORT SAP=***sapaddress* **MAC=***macaddress* **MAXDATA=***n* **MAXSTN=***maxstations***|**
PU SAP=*sapaddress* **MAC=***macaddress* **[MAXDATA=***n***}**

Explanation: VTAM issues this message in response to a DISPLAY ID command for a LAN major node, a switched PU (station) connected to the LAN, or a dynamic switched PU defined in an XCA major node.

PORT is indicated when a LAN major node is being displayed. The information provided is derived from similarly named keywords on the PORT definition statement within the major node.

sapaddress is the service access point (SAP) address for the LAN connection that the major node defines.

macaddress is the 12-digit hexadecimal medium access control (MAC) address for the LAN connection that the major node defines. If no *macaddress* was defined, zeroes are displayed.

n is the maximum number of bytes in the information field of an LPDU that can be transmitted on the LAN.

maxstations is the maximum number of stations that can be connected on the LAN. *maxstations* is listed only when this message results from a DISPLAY ID command specifying the name of a LAN major node.

PU is issued when a switched PU (station) attached to the LAN is being displayed. The information provided is derived from similarly named operands on the PU definition statement within either a LAN, a switched major node, the service access point (SAP) that is in use, or the medium access control (MAC) that is in use.

sapaddress is the service access point (SAP) address of the physical unit that is on the LAN.

macaddress is the 12-digit hexadecimal medium access control (MAC) address for the station on the LAN represented by the PU.

n is the maximum amount of data in bytes, including the transmission header (TH) and request/response header (RH), that the physical unit can receive in one segment of a path information unit (PIU).

System Action: Processing continues.

Operator Response: None.

Programmer Response: None.

IST957I NO NCP LOAD MODULE OR DUMP ON DISK

Explanation: This message is part of a group of messages that VTAM issues in response to a DISPLAY DISK command. The first message in the group is IST951I. Message IST957I is issued when there is no information on the disk to display.

System Action: Processing continues.

Operator Response: None.

Programmer Response: None.

IST958I INBND=*inbound* OUTBND=*outbound* PENDING=*pending* ATTN=*attntot* CUA=*device_address*

Explanation: VTAM issues this message in response to a DISPLAY ID command for a LAN major node.

inbound is the total number of inbound messages.

outbound is the total number of outbound messages.

pending is the current number of pending output messages.

attntot is the total number of attention interrupts counted.

device_address is the hexadecimal channel address of the interrupt port.

System Action: Processing continues.

Operator Response: None.

Programmer Response: None.

IST959I INVALID PIU RECEIVED FROM *nodename*—VARY INACT SCHEDULED

Explanation: VTAM issues this message when the resource *nodename* issued a path information unit (**PIU**) with a request/response header that violates SNA architecture rules.

Note: This message is percolated. See “Message rerouting and percolation” on page 710 for additional information.

System Action: VTAM generates a VARY INACT,TYPE=FORCE command and issues it internally to resource *nodename*.

Operator Response: This is probably a hardware error. Save the system log and request a buffer trace on the device for problem determination.

Programmer Response: Use the buffer trace to identify the PIUs that are not valid.

IST960I DISPLAY TABLE FAILED–*tablename* NOT FOUND

Explanation: VTAM issues this command in response to a DISPLAY TABLE command when VTAM did not find *tablename*. The table is not currently in use by any resource as a COS, logon mode, interpret, USS, model name, or associated LU table, or the table does not exist.

System Action: VTAM rejects the command.

Operator Response: Ensure that you entered *tablename* correctly.

Programmer Response: None.

IST961I [NONDISRUPTIVE] LOAD OF *ncpname* [WITH *loadmodname*] FAILED

Explanation: This message is the first in a group of messages that VTAM issues when a load fails for NCP *ncpname*.

```
IST961I  [NONDISRUPTIVE] LOAD OF ncpname [WITH loadmodname] FAILED
IST523I  REASON = reason
```

loadmodname is included in the message when the load module name differs from *ncpname*.

reason in message IST523I indicates why the load failed and is one of the following:

PERMANENT I/O ERROR [–REQ: *runame* **SENSE:** *sense***]**

Explanation: During an attempt to load the communication controller, VTAM detected a permanent I/O error. This may have been caused by one of the following:

– Hardware error
– VTAM detected channel contention in a multiple-channel attached communication controller that was being loaded from another domain.
– If a MODIFY LOAD command was issued for a local or remote NCP, the size of MAXDATA on the PCCU macro must be at least 2,048 plus the size of the TH and RH.

runame is the name of the request unit that failed. See Chapter 14, “Command and RU types in VTAM messages” on page 685 for a description of *runame*.

sense is the SNA sense code for the failed request unit. See the *z/OS Communications Server: IP and SNA Codes* for a description of *sense*. If *sense* is set by NCP, refer to *NCP, SSP, and EP Messages and Codes* for a complete description.

The values of *runame* and *sense* are issued only for remote NCP loads.

System Action: VTAM rejects the command. The communication controller remains inactive and unavailable to VTAM.

Operator Response: Save the system log and obtain an NCP dump with the NCP dump utilities for problem determination.

Run your operating system service aid program to determine if MDR/OBR information has been recorded. See the *EREP User’s Guide and Reference* for more information on using EREP.

If you use a network management application such as NetView, check to see if an alert was recorded for this problem.

Programmer Response: Verify that the CUA® operand (on the PCCU definition statement of the NCP source statements) matches the actual channel address that is connected to the controller. If the controller is multiple-channel attached and the failure was caused by a load from another domain, wait for the completion of that load operation.

Make the necessary changes to the NCP generation. If problems persist, take the following actions:

– If you have access to IBMLink, search for known problems in this area. If no applicable matches are found, report the problem to IBM by using the Electronic Technical Report (ETR) option on IBMLink.
– If you do not have access to IBMLink, report the problem to the IBM software support center. If available, provide the MDR/OBR information from your operating system service aid program or the alert information recorded by your network management application.

INITIAL TEST HARDSTOP

Explanation: VTAM detected an error condition that caused the initial test program of the load utility for the NCP to hardstop the communication controller.

System Action: VTAM rejects the command. The communication controller remains inactive.

Operator Response: Save the system log for problem determination.

Programmer Response: If you cannot determine the cause of the problem from the output provided or need additional assistance, contact the IBM software support center.

LOADER FAILURE

Explanation: An error occurred during an attempt to load an NCP into a communication controller.

System Action: VTAM deactivates the communication controller.

Operator Response: Save the system log for problem determination. Message IST155I or other system messages may provide additional information about the cause of the loader failure.

Programmer Response: If you cannot determine the cause of the problem from the output provided or need additional assistance, contact the IBM software support center.

ddname **BLDL ERROR**

Explanation: VTAM tried to load a communication controller.

The operation failed because a BLDL (the load of a core resident table with track addresses of frequently used modules on a link library) issued for that library defined by DD statement *ddname* failed.

System Action: The communication controller is not activated. Other VTAM processing continues.

Operator Response: VTAM operations can be continued with other nodes in the network. Save the system log for problem determination.

Programmer Response:

Inspect the directory of the partitioned data set defined by the DD statement *ddname*.

– If it is the NCP module library, ensure that the NCP being loaded into the communication controller is a member of that library (the NCP name is defined by the NEWNAME operand on the NCP BUILD definition statement).
– If *ddname* defines the initial test library, make sure modules IFL3705D and IFL3705B are members of the library.

INVALID DEVICE TYPE DEFINITION

Explanation: VTAM tried to load a communication controller, but failed after checking the communication controller unit control block (UCB) and determining that the operating system generation did not specify a valid channel adapter type for this NCP.

System Action: The communication controller is deactivated.

Operator Response: Save the system log for problem determination.

Programmer Response: Check the channel unit address of the specified communication controller to make sure that it is the correct address. If it is, the communication controller might have been incorrectly specified during the operating system generation.

UNEXPECTED END OF FILE ON DATA SET

Explanation: While trying to load an NCP into a communication controller, the load program encountered an unexpected end-of-file condition either on the NCP load module data set or on the initial test data set.

System Action: The communication controller is deactivated. Other processing continues.

Operator Response: Save the system log for problem determination.

Programmer Response: Ensure that the DD statements for the NCP load module and initial test data sets specify the correct data sets. Make sure these data sets contain the correct NCP load module and test routines for the communication controller hardware.

UNEXPECTED CODE *code* **FROM** *loadmod*

Explanation: VTAM tried to load an NCP into a communication controller. The load failed when VTAM received an unrecognizable return code *code*, in decimal, from the NCP load utility program *loadmod*.

loadmod is **IFLOADRN**.

System Action: The communication controller is deactivated.

Operator Response: Attempt to load the communication controller offline to VTAM using the NCP utility program. See the *NCP, SSP, and EP Generation and Loading Guide* for information on using the utility program.

Save the system log and obtain an NCP dump with the NCP dump utilities for problem determination.

Programmer Response: Make the necessary changes to the NCP generation. See the *z/OS Communications Server: SNA Diagnosis Vol 1, Techniques and Procedures* for more information on NCP problems.

LOAD MODULE TOO LARGE

Explanation: An attempt to load an NCP into a communication controller failed because the NCP load module was too large for the particular communication controller.

System Action: VTAM deactivates the communication controller. Other VTAM processing continues.

Operator Response: Save the system log for problem determination.

Programmer Response: Check the NCP generation for errors or unnecessary use of storage. The NCP needs to be regenerated.

PERMANENT I/O ERROR ON *libname*

Explanation: VTAM tried to load a communication controller with an NCP. It failed because a permanent I/O error occurred on the data set defined by the DD statement *libname* (the NCP library).

System Action: VTAM deactivates the communication controller.

Operator Response: If the error persists, save the system log for problem determination.

Message IOS000I or other related messages may be issued and can provide additional information.

This is probably a hardware error. Run your operating system service aid program to determine if MDR/OBR information has been recorded. See the *EREP User's Guide and Reference* for more information on using EREP.

If you use a network management application such as NetView, check to see if an alert was recorded for this problem.

Programmer Response: Create the NCP library on a different disk pack if possible.

If you cannot determine the cause of the problem from the output provided or need additional assistance, contact the IBM hardware support center.

If available, provide the MDR/OBR information from your operating system service aid program or the alert information recorded by your network management application.

ddname **COULD NOT BE OPENED**

Explanation: VTAM tried to load a communication controller. It failed because the data set defined by the DD statement *ddname* (the NCP load library) could not be opened.

System Action: VTAM deactivates the communication controller.

Operator Response: Save the system log for problem determination.

Programmer Response: Make sure the specified DD statement in the VTAM procedure is included and correctly specified.

Check the definition library to ensure that all requirements for VTAM are correct for your system.

IST962I INOP X'*code*' RECEIVED FOR PU UNDER SWITCHED LINE *linename*

Explanation: An inoperative RU has been received that contains the SNA network address of a PUX, a skeleton PU defined under a line that represents a switched connection. This situation occurs when the switched line is active, but the switched connection has not yet been established. The switched line has been conditioned to accept incoming calls (ACTCONNIN sent). A call has been accepted on the line and an attempt was made to contact the calling station. An error is detected during the contact process at the line protocol level. The switched connection fails. The INOP RU is the method of notifying the SSCP of the error.

A RECMS or NMVT RU should always accompany this error. VTAM passes this data to NETVIEW/NPDA or records it on the system error recording data set.

linename is the name of the switched line.

code (expressed in hexadecimal) provides the INOP reason code, and can be one of the following:

01 Station INOP: There was a loss of contact, unexpected loss of connection, or a connection establishment failure.

03 Station INOP: SDLC Disconnect request received.

04 Station INOP: SDLC Request Disconnect response received.

05 Station INOP: SDLC Disconnect Mode received.

06 Station INOP: IPL or dump is in progress.

07 Station INOP: Remote Power Off (RPO) in progress.

System Action: Processing continues.

Operator Response: None.

Programmer Response: None.

IST963I LOAD MODULE = *loadmodname*

Explanation: This message is issued as a result of the DISPLAY ID command for an NCP. It is displayed only when the name of the load module currently loaded is different than that of the NCP PU.

loadmodname is the name of the load module currently loaded.

System Action: Processing continues.

Operator Response: None.

Programmer Response: None.

IST965I AUTO DUMP/LOAD: {YES|NO}

Explanation: This message is part of a message group. IST951I is the first message in the group. See the explanation of that message for a complete description.

System Action: Processing continues.

Operator Response: None.

Programmer Response: None.

IST966I USER=VCNS

Explanation: This message is part of a group of messages that VTAM issues in response to a DISPLAY ID command for a line. This message identifies this line as the anchor for all virtual calls used by VTAM Common Network Services (VCNS) application programs for an XCA major node.

System Action: Processing continues.

Operator Response: None.

Programmer Response: None.

IST967I *operation* **FAILED FOR** *dataspace*; **RC** *return_code* **RS** *reason_code*

Explanation: A macro (*operation*) was issued by VTAM for the data space *dataspace*, and an error return code was returned without successful completion of the request.

dspname is the name of a data space created by VTAM. The data space name is generated automatically when the data space is created by VTAM and is in one of the following formats:

ISTNMSDS
Session awareness

ISTNMPDS
Problem determination trace

ISTITDS1
VIT in data space

ACY*ccccc*
CMIP services applications

IST*xxxxx*
TSO or VTAM applications

*ccccc***IST**
CMIP, TSO, or VTAM applications

where *ccccc* is in the range of 1–99999 and *xxxxx* is in the range of 0–FFFFC.

System Action: If the *dataspace* is ISTNMSDS or ISTNMPDS, and *operation* is DSPSERV CREATE or ALESERV ADD, only the LU0 interface is available for communication between VTAM and the NetView program's session monitor.

If the *dataspace* is ISTITDS1 and the operation is DSPSERV CREATE, the VIT data space will not be used.

If *dataspace* is ISTxxxxx or cccccIST, *operation* is DSPSERV CREATE, *return_code* is 08 and *reason_code* is 6B000911, there was a conflict with the dataspace name supplied by VTAM. Since VTAM tries four times to create a unique data space name, the occurrence of IST967I may only be informational. VTAM may have succeeded in creating the dataspace with another name. The DISPLAY STORUSE,DSPNAME=* can be used to confirm whether the ACB was opened with another name.

If *operation* is DSPSERV RELEASE, the data space interface will continue to function without releasing unused storage to virtual storage management.

Operator Response: Save the system log for problem determination.

Programmer Response:

- See the *MVS/ESA System Programming Library: Application Development Guide* for a description of *return_code* and *reason_code*.

IST968I INTERFACE INITIALIZATION FAILED – REASON *reasoncode*

Explanation: Data space interface initialization failed, and the LU0 interface will be used.

reason_code	**Meaning**
04	The data space could not be created.
08	Request for CSA storage has failed during VTAM initialization.

System Action:

- For reason code **04**, VTAM will only use the LU0 interface for the session awareness (SAW) and path information unit (PIU) data interfaces.
- For reason code **08**, VTAM initialization fails.

Operator Response: Save the system log for problem determination.

Programmer Response: See the *MVS/ESA System Programming Library: Application Development Guide* for definitions of *reasoncode* for data space services.

IST970I LU-LU VERIFICATION ERROR *code* **FOR** *profilename*

Explanation: This message is issued when an LU 6.2 application program requests that a session be established, but a session level LU-LU verification violation or error occurred.

profilename is the name of the security manager profile defined for the LU pair. The format of *profilename* is *local_netid.local_name.partner_name* where:

local_netid is the local network ID

local_name is the ACB name of the local application program

partner_name is the LU name of the session partner.

code is the type of security violation that occurred.

03 The security manager locked the profile.

04 The profile contains an invalid session key.

05 *partner_name* rejected the session due to a security related error.

06 *local_name* was defined with REQUIRED session level LU-LU verification, but one of the following occurred:
- *local_name* is the PLU, but no password was defined for *profilename*.
- *partner_name* is the PLU requesting a session without using session level LU-LU verification.

07 Session level LU-LU verification data for the session between *local_name* and *partner_name* matched the data for an outstanding session activation request.

08 *local_name* was defined with optional verification, and a password was defined for *profilename*, indicating that session level LU-LU verification is necessary. *partner_name* requested a session without verification.

09 *local_name* was defined with optional verification, and no password was defined for *profilename*, indicating that session level LU-LU verification should not be used. *partner_name* requested a session with verification.

0B The profile was changed during session activation.

0C The password for the profile has expired.

0D *local_name* was defined to use only the enhanced protocol (SECLVL=LEVEL2 is specified on the APPL definition statement). *partner_name* does not support the enhanced protocol.

20 The security manager component is either not available or overloaded (received a large number of requests in a short period of time).

3C The security manager component failed.

System Action: Session activation failed.

Operator Response:

For codes **03, 04, 0B**, and **0C**, enter the MODIFY PROFILES command for the local LU. If VTAM issues this message repeatedly, notify the security administrator of *code* and *profilename*.

For code **05**, consult message IST970I issued to the partner LU for specific actions.

For codes **06, 08**, and **09**, enter the MODIFY PROFILES command for the local LU. If VTAM issues this message repeatedly, save the system log for problem determination.

For codes **07** and **0D**, notify the security administrator of *code* and *profilename*.

For codes **20** and **3C**, save the system log for problem determination.

Programmer Response:

For code **05**, consult message IST970I issued to the partner LU for specific actions.

For codes **06**, **08**, and **09**, check the VERIFY operand specified on the APPL statements to identify the correct level for the two LUs.

For code **20**, verify that the security manager is installed and resource class APPCLU is active.

If the security manager is installed and resource class APPCLU is active, the problem may be that the security manager is overloaded. Lowering the value of AUTOSES on the LU definition statements may solve the problem.

For code **3C**, verify that the security manager is installed and resource class APPCLU is active.

IST971I ADJ LINK STATION *linkstation* **USING** *linkname* **IN** *netid*

Explanation: This message is part of a group of messages that VTAM issues in response to a DISPLAY ID command entered for an NCP major node. This message indicates that the adjacent link station has contacted a cross-network NCP major node.

linkstation is the adjacent link station.

linkname is the connecting link station.

netid is the network ID of the cross-network NCP major node.

System Action: Processing continues.

Operator Response: None.

Programmer Response: None.

IST972I SIT TRACE FOR *linename* **TERMINATED –** *reason*

Explanation: A scanner interface trace (SIT) for *linename* has terminated.

reason may be one of the following:

HARDWARE ERROR
Either an adapter I/O error occurred, or the SIT backup timer expired.

RESOURCES UNAVAILABLE
Either VTAM needed NCP buffers but could not obtain them, or a problem other than an adapter I/O error occurred.

System Action: Processing continues.

Operator Response:

- If *reason* is **HARDWARE ERROR**, save the system log for problem determination.
- If *reason* is **RESOURCES UNAVAILABLE**, retry the command when scanner resources become available. If the command continues to fail, save the system log for problem determination.

Run your operating system service aid program to determine if MDR/OBR information has been recorded. See the *EREP User's Guide* and the*EREP Reference* for more information on using EREP.

If you use a network management application such as NetView, check to see if an alert was recorded for this problem.

Programmer Response: If you cannot determine the cause of the problem from the output provided or need additional assistance, contact the IBM hardware support center.

If available, provide the MDR/OBR information from your operating system service aid program or the alert information recorded by your network management application.

IST973I USERVAR *uservar* **{CLASS HAS BEEN CHANGED FROM AUTO TO USER| TYPE HAS BEEN CHANGED FROM** *type* **TO** *type***}**

Explanation: VTAM issues this message as part of a message group in response to a MODIFY USERVAR command. The first message in the group is IST1283I. See that message for a complete description of the group.

uservar is the name of the USERVAR.

This message is issued when one or both of the following has occurred:

- **CLASS HAS BEEN CHANGED FROM AUTO TO USER**

  The MODIFY command was entered for a USERVAR that was being managed automatically by VTAM, thereby changing the class to user-managed.

  Note: VTAM no longer manages the updating or deletion of this USERVAR.
- **TYPE HAS BEEN CHANGED FROM** *type* **TO** *type*

  The type of a user-managed USERVAR has been changed.

  type can be **STATIC**, **DYNAMIC**, or **VOLATILE**.

Note: This message is percolated. See “Message rerouting and percolation” on page 710 for additional information.

System Action: Processing continues.

Operator Response: None.

Programmer Response: None.

IST976I ENTRY *entryname* **DEFINED BUT NO** *tabletype* **DEFINED FOR** *resourcename*

Explanation: VTAM issues this message during major node activation or during session initiation. A *tabletype* table entry *entryname* was specified on the *resourcename* definition statement, but no *tabletype* table is defined.

entryname is the entry that was specified on the LU, LOCAL, TERMINAL, or APPL definition statement.

tabletype is **MDLTAB** (model name table) or **ASLTAB** (associated LU table).

resourcename is the 1–8 character name of the LU, LOCAL, TERMINAL, or APPL for which the *entryname* is defined.

System Action: Processing continues during major node activation.

If *tabletype* is **MDLTAB**, session establishment continues during session initiation with no model name provided to the PLU.

If *tabletype* is **ASLTAB**, session establishment continues during session initiation with no associated LU names provided to the PLU.

Operator Response: Save the system log for problem determination.

Programmer Response: You need to associate a table with the LU. You can do this by either specifying a table in the LU definition, or issuing a MODIFY TABLE command to associate a table with the LU.

If you have specified a table in the LU definition, verify that the table is specified correctly. If it is not, correct the *tablename* and reactivate the LU. If the table specified in the LU definition is correct, the operator may have deleted the association with a MODIFY TABLE command. Enter another MODIFY TABLE command to reestablish the association.

IST977I **MDLTAB=***mdlname* **ASLTAB=***aslname*

Explanation: This message is part of a subgroup of messages that VTAM issues in response to a DISPLAY ID command for an application minor node or LU. A description of the message subgroup follows:

```
 IST977I   MDLTAB=mdlname ASLTAB=aslname
[IST1395I FLDTAB = fldname    FILTER = filtername]
[IST1333I ADJLIST = listname]
```

IST977I

mdlname is the name of the model name table.

aslname is the name of the associated LU table.

If a model name table or associated LU table was not defined for the resource, ***NA*** is displayed.

IST1333I

This message is displayed only when the DISPLAY ID=CDRSC command is issued.

listname is the name of an adjacent SSCP table as defined by an ADJLIST definition statement.

If an adjacent SSCP table was not specified for the CDRSC, then ***NA*** is displayed.

See the descriptions of the ADJLIST definition statement in the *z/OS Communications Server: SNA Resource Definition Reference* for more information on adjacent SSCP tables.

IST1395I

This message is displayed only when the DISPLAY ID=ISTNOP command is issued.

fldname is the name of the user-defined message flooding prevention table. If there is currently no message flooding table active for ISTNOP, then *fldname* is ***NA***.

filtername is the name of the SAW Filter table. If there is currently no session awareness (SAW) filter table, *filtername* is ***NA***.

See the *z/OS Communications Server: SNA Resource Definition Reference* for more information on these tables.

System Action: Processing continues.

Operator Response: None.

Programmer Response: None.

IST979I **BUILD FAILED FOR TABLE** *tablename*

Explanation: This message is the first in a group of messages that VTAM issues in response to a major node activation or a MODIFY TABLE command when the activation of table *tablename* failed.

```
 IST979I BUILD FAILED FOR TABLE tablename
 IST523I REASON = reason
[IST323I LABEL = labelname – MACRO = macrotype – KEYWORD = keyword]
```

IST979I

tablename is the name of the table that failed and is a model name table, an associated LU table, or a message flooding table.

IST523I

reason indicates the cause of the failure.

– Most of the reasons involve macro coding errors, which may show up at this time because the tables are not pre-assembled.
– Other errors such as insufficient storage and open failures cause activation to fail even though there are no errors in the table definition.

reason can be one of the following:

DUPLICATE ENTRY LABEL
The same label appears on more than one table entry macro (MDLENT or ASLENT) within the table.

DUPLICATE PARAMETER
A valid keyword has been coded multiple times on a single macro.

DUPLICATE PLU VALUE
The same PLU name appears on more than one PLU subentry macro (MDLPLU or ASLPLU) following a single entry macro (MDLENT or ASLENT).

EXTRA VALUE
Multiple values were coded on a keyword that does not allow multiple values.

INSUFFICIENT STORAGE
VTAM was unable to allocate storage for the table.

INVALID LABEL
The label on the macro is invalid or a MDLENT or ASLENT macro was coded without a label.

INVALID MACRO
The resource definition contains an invalid macro or multiple MDLTAB or ASLTAB macros.

INVALID PARAMETER
The macro has an invalid keyword.

INVALID VALUE
The keyword has an invalid value coded.

LIST VALUE ** IS IN CIRCULAR LIST OR MULTIPLE LISTS**
The LIST keyword on a FLDENT macro in the message flooding table referred to a message that was in more than one list.

LIST VALUE ** WAS NOT FOUND**
The LIST keyword on a FLDENT macro in the message flooding table referenced a message that was not also in the table.

MACRO SEQUENCE ERROR
The second macro in the resource definition is either MDLPLU or ASLPLU. These macros must be preceded by a table entry macro (MDLENT or ASLENT).

MISSING PLU PARAMETER
A MDLPLU or ASLPLU macro has been coded without the PLU keyword.

OPEN FOR VTAM DATA SET SYS1.VTAMLST FAILED
VTAM could not open the member of the data set containing the table.

SYNTAX ERROR
A keyword on a macro has a syntax error.

TABLE CONTAINS NO USEFUL INFORMATION
The table is logically empty.

- For a model name table, VTAM could not find a MDLENT or MDLPLU macro with a valid MODEL keyword value.
- For an associated LU table, VTAM could not find an ASLENT or ASLPLU macro with a valid PRINTER1 or PRINTER2 keyword value.
- For a message flooding table, VTAM could not find a FLDENT macro with a valid MESSAGE keyword value.

TABLE SIZE OF X'*xxxxxxxx*' IS INVALID
The table has exceeded the limitation of 16 megabytes (hexadecimal **00FFFFFF**).

IST323I

If this message is displayed, it identifies the location of the error in *tablename*.

System Action: Processing continues, but *tablename* cannot be used to supply model terminal support information.

Operator Response: Enter the DISPLAY BFRUSE command to display information about the common service area (CSA). Save the system log for problem determination.

Programmer Response:

- If *reason* is **INSUFFICIENT STORAGE**, increase storage as required. You might want to redefine your CSA start options using the MODIFY VTAMOPTS command.

  See *z/OS Communications Server: SNA Operation* for more information on the DISPLAY BFRUSE and DISPLAY VTAMOPTS commands. The *z/OS Communications Server: SNA Diagnosis Vol 1, Techniques and Procedures* provides additional information.
- If *reason* is **OPEN FOR VTAM DATA SET SYS1.VTAMLST FAILED**, review system definition and VTAM data set and allocation. When the error condition has been corrected, reactivate the table.
- For all other *reason*s, correct the resource definition error indicated by message IST523I.

IST981I VTAM PRIVATE: CURRENT = *currentk***, MAXIMUM USED =** *maximumk*

Explanation: This message is part of a subgroup of messages that VTAM issues in response to a DISPLAY BFRUSE or a DISPLAY STORUSE command. For a DISPLAY BFRUSE command, the first message in the subgroup is IST449I. For a DISPLAY STORUSE command, the first message in the group is IST1242I. See the explanation of those messages for a complete description.

IST982I *n* **{***runame***|OTHER} REQUEST(S) PENDING TO SUBAREA** *subarea*

Explanation: If *runame* is indicated, the number *n* of request units (RU) have been pending to subarea *subarea* for a period of time without receipt of a corresponding response unit. If the request units remain outstanding for subsequent intervals, this message will be repeated at such intervals until the request units are received or purged.

VTAM displays **OTHER** when the request unit type is not known.

Message IST982I indicates that a problem **may** exist; the longer a request unit remains outstanding (that is, the more often this message reappears for the same request unit), the more likely it is that a problem exists.

See Chapter 14, “Command and RU types in VTAM messages” on page 685 for a list of request units and their descriptions.

System Action: Processing continues, awaiting the corresponding response unit.

Operator Response: If a particular request unit remains outstanding for an extended period of time, save the system log for problem determination.

Programmer Response: For a discussion of pending I/O problems, see the wait procedures in *z/OS Communications Server: SNA Diagnosis Vol 1, Techniques and Procedures*.

IST983E *poaname* **MESSAGE QUEUE EXCEEDED—FURTHER MESSAGES WILL BE DISCARDED**

Explanation: The POA *poaname* message queue has reached the limit (POAQLIM) specified on the APPL definition statement. This can occur when the POA is not issuing RCVCMD macros quickly enough to clear the VTAM message queue for this application.

poaname is the name of the POA that has reached the specified message queue limit.

System Action: All further messages destined for *poaname* are discarded until the message queue is cleared.

Operator Response:

1. Issue DISPLAY ID=*poaname* and save the system log. Message IST271I will provide the *jobname* related to the *poaname*.
2. Save the system log and request a dump of the application program (*jobname*) and VTAM for problem determination.

Programmer Response:

- If the POA is not issuing RCVCMD macros quickly enough, you can clear the message queue for *poaname* by issuing RCVCMD macros with OPTCD=NQ until the queue is empty.
- If RCVCMD macros are being issued quickly enough, examine the dump and the VTAM internal trace (if available) to determine why the messages are not being received quickly enough. Check to ensure that the RCVCMD macros are being received by VTAM.
- You might need to change the POA RCVCMD processing so that RCVCMDs are issued more frequently.
- You can also change the dispatching priority of the POA. Refer to your operating system documentation for information on dispatching priority.

- You can cancel the job related to *poaname*. This will clear the VTAM message queue for *poaname*.

Refer to the *z/OS Communications Server: SNA Programming* for information on program operator coding requirements in program operator applications and the RCVCMD macro.

IST984I USER EXIT *exitname* **IS** *status*

Explanation: VTAM issues this message when an installation-wide exit is successfully activated, deactivated, or replaced.

exitname is displayed in the form *routine_name.instance_name* where:

routine_name is the name of the installation-wide exit routine.

instance_name is the instance name of the exit routine. When issued for the base exit, *.instance_name* is blank.

status is one of the following:

ACTIVE
The exit *exitname* was successfully loaded, either during initialization or by a MODIFY EXIT,OPTION=ACT command. The exit will now be invoked when requested by VTAM code.

INACTIVE
The exit *exitname* was deactivated by a MODIFY EXIT,OPTION=INACT command or when a MODIFY EXIT,OPTION=REPL command failed. The exit will not be invoked when requested by VTAM code.

REPLACED
The exit *exitname* was replaced by a MODIFY EXIT,OPTION=REPL command. The new version of the exit will now be invoked when requested by VTAM code.

System Action: Processing continues.

Operator Response: None.

Programmer Response: None.

IST985I USER EXIT *exitname action* **FAILED–CODE** *code*

Explanation: VTAM issues this message when an unsuccessful operation was performed on an installation-wide exit.

If message IST1183I is issued with message IST985I and a failure code is received that is not documented in this message, see the appropriate exit's documentation.

exitname is displayed in the form *routine_name.instance_name* where:

routine_name is the name of the installation-wide exit routine.

instance_name is the instance name of the exit routine. When issued for the base exit, *.instance_name* is blank.

action indicates the operation that failed for exit *exitname* and is one of the following:

ACTIVATION
The activation of user exit *exitname* failed during initialization or during processing of a MODIFY EXIT,OPTION=ACT command.

FORCE
The forced inactivation of the exit *exitname* failed during processing of a MODIFY EXIT,OPTION=FORCE command.

INACTIVATION
The deactivation of user exit *exitname* failed during processing of a MODIFY EXIT,OPTION=INACT command.

INITIALIZATION
The initialization of VTAM's exit facility failed. The exit function of VTAM is not available. The *exitname* will not be present in this case.

INVOCATION
The invocation of user exit *exitname* failed. The invocation was performed internally in VTAM code and cannot be affected by the operator.

IST985I

REPLACEMENT

The replacement of user exit *exitname* failed during processing of a MODIFY EXIT,OPTION=REPL command. The exit *exitname* is now inactive. Message IST984I follows this message and provides additional information.

code, in hexadecimal format, indicates the type of failure:

04
The exit function of VTAM could not be initialized.

08 The exit *exitname* is not known to VTAM.

0A
An error occurred during the loading of ISTIECDF. The exit function of VTAM is not available.

0C
An error occurred during the loading of ISTIECRT. The exit function of VTAM is not available.

0E
An error occurred during the loading of ISTIECVR. The exit function of VTAM is not available.

10 The exit *exitname* is already in the desired state.

14 There is not enough storage to perform this action on the user defined exit *exitname*.

18 You are not authorized to modify the exit *exitname*. OPTION=FORCE is not valid for a program operator application (POA) program.

1C An abend occurred during the activation, deactivation, invocation, or replacement of the exit *exitname*.

1E The exit *exitname* is being deactivated.

20 An error occurred while loading the exit *exitname* module.

24 An error occurred while loading the initialization module for exit *exitname*.

28 Activation of the exit *exitname* is already in progress.

2A The exit *exitname* is not supported for a subarea node.

2C The exit *exitname* is being deactivated in response to a request to replace this exit with one that has less function.

2E The exit activation has failed because the subtask is detached after abending five times.

30
The exit function of VTAM is not available.

40
The exit function of VTAM has terminated.

F0 The exit *exitname* is not active.

F1 Deactivation of the exit *exitname* is already in progress.

F2 An abend occurred during processing within the exit *exitname*.

F3 Replacement of the exit *exitname* is already in progress.

System Action:

For code **04** processing continues; user exit *exitname* will not be available.

For codes **08, 10,**and **40** processing continues.

For codes **0A, 0C, 0E,** and **30** VTAM initialization fails.

For codes **14, 18, 1C, 1E, 2A, 2E,** and **F0** the command is not executed.

For codes **20** and **24** the exit *exitname* cannot be found and will not be invoked.

For code **28** activation of exit *exitname* will continue.

For code **2C** and **F1** deactivation of exit *exitname* will continue.

For code **F2** the exit *exitname* will be disabled and will not be invoked during further requests.

For code **F3** replacement of the exit *exitname* will continue.

Operator Response:

For codes **04, 08, 0A, 0C, 0E, 1C, 30, 40,** and **F2** save the system log for problem determination.

For codes **10** and **2A** no further action is required.

For code **14** if VTAM has been initialized, wait a short time and reenter the command. If VTAM continues to issue this message, enter the DISPLAY BFRUSE command. Enter the DISPLAY STORUSE command to display storage usage for storage pools. Save the system log and request a dump for problem determination.

If VTAM initialization failed, save the system log for problem determination.

For code **18** verify that exit *exitname* is correct and reenter the command. Save the system log for problem determination if the failure reoccurs. If *action* is FORCE, you must issue the MODIFY,EXIT,OPTION=FORCE from a system console.

For codes **20, 24,** and **F0** verify that exit *exitname* is correct and reenter the command. Save the system log for problem determination if the failure reoccurs.

For code **1E** and **F1** wait for deactivation of exit *exitname* to complete and reenter the command.

For code **28** wait for the activation of exit *exitname* to complete and reenter the command.

For code **2C** verify that you want to activate a new exit with less function than the old exit. Reenter the MODIFY EXIT command specifying OPT=ACT to activate the correct exit.

In the future to replace an exit with one that has less function, enter a MODIFY EXIT command specifying OPT=INACT to deactivate the old exit. Then enter a MODIFY EXIT command specifying OPT=ACT to activate the new exit.

For code **F3** wait for the replacement of exit *exitname* to complete and reenter the command.

For code **2E** save the console log for problem determination. Notify the system programmer to restart VTAM to reattach the subtask.

Programmer Response:

For codes **04, 08, 0A, 0C,** and **0E** determine whether modules are loaded correctly by VTAM.

If you cannot determine the cause of the problem from the output provided, take the following actions:

- If you have access to IBMLink, search for known problems in this area. If no applicable matches are found, report the problem to IBM by using the Electronic Technical Report (ETR) option on IBMLink.
- If you do not have access to IBMLink, report the problem to the IBM Support Center.

For codes **10, 1E, 28, 2A, 2C, F1,** and **F3** no further action is required.

For code **14** you might want to redefine your buffer pool or CSA start options. If the start option cannot be modified using the MODIFY VTAMOPTS command, you must modify the VTAM start options file (ATCSTRxx) and restart VTAM to use the start option.

See *z/OS Communications Server: SNA Operation* for more information on the DISPLAY BFRUSE and MODIFY VTAMOPTS commands. The *z/OS Communications Server: SNA Diagnosis Vol 1, Techniques and Procedures* provides additional information.

See the *z/OS Communications Server: SNA Diagnosis Vol 2, FFST Dumps and the VIT* for information about analyzing dumps and about analyzing storage using the VIT analysis tool, if external trace is active.

For code **18**, verify that the correct exit name was used and that the exit resides in the correct load library.

For codes **1C, 30,** and **40**, if you cannot determine the cause of the problem from the output provided, take the following actions:

- If you have access to IBMLink, search for known problems in this area. If no applicable matches are found, report the problem to IBM by using the Electronic Technical Report (ETR) option on IBMLink.
- If you do not have access to IBMLink, report the problem to the IBM Support Center.

IST986I

For codes **20, 24,** and **F0**, verify that the correct exit name was used and that the exit resides in the correct load library. See *z/OS Communications Server: SNA Customization* for more information about these exit routines.

For code **F2**, the abend was caused by a failure in the exit code. Verify that the exit *exitname* is functioning properly.

For code **2E**, restart VTAM to reattach the subtask.

IST986I TABLE=*tablename* **TYPE=***tabletype* **USE COUNT=***usecount*

Explanation: This message is part of a group of messages that VTAM issues in response to a DISPLAY TABLE command. Possible message groups follow.

1. If MSGLVL=V4R1 or above is specified, the following message group is displayed:

```
 IST986I   TABLE=tablename TYPE=tabletype USE COUNT=usecount
[IST987I  THE RESOURCES THAT USE THE TABLE ARE:]
[IST1154I resourcename_1 ... resourcename_n]
:
 IST1454I  count RESOURCE(S) DISPLAYED
 IST314I   END
```

2. If MSGLVL=BASE is specified or taken as the default, the following message group is displayed:

```
 IST986I   TABLE=tablename TYPE=tabletype USE COUNT=usecount
[IST987I  THE RESOURCES THAT USE THE TABLE ARE:]
[IST988I  resourcename_1 ... resourcename_n]
:
 IST1454I  count RESOURCE(S) DISPLAYED
 IST314I   END
```

See the *z/OS Communications Server: SNA Resource Definition Reference* for a description of the MSGLEVEL start option and the MSGLVL operand on the USSMSG macro.

IST986I

tablename is the name of the table entered on the DISPLAY command.

tabletype is the type of table that *tablename* represents and can be one of the following:

ASLTAB
: Associated LU table

COSTAB
: Class-of-service table

FLDTAB
: Message flooding table

LOGTAB
: Interpret table

MDLTAB
: Model name table

MODETAB
: Logon mode table

USSTAB
: Unformatted system services table

****NA****
: Name not available. The USS or interpret table was either assembled with pre-V3R2 macros or did not have FORMAT=DYNAMIC coded on the USSTAB macro.

usecount is the number of resources that use the table.

Note: If *tabletype* is COSTAB, *usecount* can be higher than the number of user resource names displayed. This will occur if PU type 4 or PU type 5 uses the *tablename* for multiple network IDs. Enter a DISPLAY COS,ID=*resourcename*,NETID=*netid* command to determine which network IDs use the specified table for the PU type 4 or PU type 5 resource.

IST987I

This message is a header message for the information displayed in IST988I and IST1154I.

If *tabletype* is not COSTAB, you might not be able to display all of the resources listed in message IST988I or message IST1154I. Examples of resources that cannot be displayed are model logical units and reset logical units defined under a shared NCP.

IST988I

If network-qualified names are not displayed, VTAM issues this message.

resourcename is a PU type 4 or PU type 5 if *tabletype* is COSTAB. For other table types, *resourcename* is a logical unit or an application.

IST1154I

If network-qualified names are displayed, VTAM issues this message.

resourcename is a PU type 4 or PU type 5 if *tabletype* is COSTAB. For other table types, *resourcename* is a logical unit or an application in the form *netid.name*.

IST1454I

count is the total number of resources using this table.

System Action: Processing continues.

Operator Response: None.

Programmer Response: None.

IST987I THE RESOURCES THAT USE THE TABLE ARE:

Explanation: This message is part of a group of messages that VTAM issues in response to a DISPLAY TABLE command. See IST986I for a complete description of the message group.

IST988I *resourcename_1* **...** *resourcename_n*

Explanation: This message is part of a group of messages that VTAM issues in response to a DISPLAY TABLE command. See IST986I for a complete description of the message group.

This message is also part of a group of messages that VTAM issues in response to a DISPLAY LMTBL,TYPE=LUNAME or DISPLAY LMTBL,TYPE=LOGMODE command. See IST1006I for a complete description of the message group.

IST989I EXP LIMIT *explimit* **BUFFS REQUESTED** *buffers*

Explanation: This message is part of a message group. The first message in the group is IST920I. See the explanation of that message for a complete description.

IST990E CORRELATOR MISMATCH FOR *loadmodname* **IGNORED — ACTIVATION CONTINUES**

Explanation: During the activation of NCP load module *loadmodname*, VTAM detected a correlator mismatch between the generated correlator and the correlator loaded in the communication controller. VTAM ignores the mismatch because VFYC=IGNORE was specified on the NCP's PCCU definition statement, or 'IGNORE' was the reply to message IST937A. However, the mismatch might be a user error and ignoring it could lead to potential problems.

System Action: Activation continues.

Operator Response: If the correlator mismatch was unintentional, deactivate and reload the NCP.

If the correlator mismatch was intentional, none.

Programmer Response: If the correlator mismatch was unintentional, either generate the NCP again or change the value of VFYC on the PCCU definition statement.

If the correlator mismatch was intentional, none.

IST991I CORRELATOR MISMATCH FOR *loadmodname* FOUND–RELOAD SCHEDULED

Explanation: During the activation of NCP load module *loadmodname*, VTAM detected a correlator mismatch between the generated correlator and the correlator loaded in the communication controller.

This message indicates that a reload of the NCP has been scheduled and will occur for one of the following reasons:

- VFYC=NO is specified or defaulted on the NCP's PCCU definition statement.

  When there is a mismatch between the NCP load module and the resource resolution table (RRT), a repeated reload of the NCP occurs until an operator deactivates the NCP.
- 'RELOAD' was the reply to message IST937A.

System Action: The NCP is reloaded.

Operator Response:

- If the correlator mismatch was not intentional, save the system log for problem determination.

  If the NCP is in a continuous loop, enter a VARY INACT command to deactivate the NCP.
- If the correlator mismatch was intentional, no action is required.

Programmer Response:

- If the correlator mismatch was not intentional, either generate the NCP again or change the value of VFYC on the PCCU definition statement.
- If the correlator mismatch was intentional, no action is required.

IST998E VTAM MESSAGE *messageid* ISSUED BUT DOES NOT EXIST

Explanation: VTAM could not locate *messageid* in any of the VTAM message tables associated with the destination of the message (a VTAM operator or a program operator application).

System Action: Processing for message *messageid* is complete.

Operator Response: Save the system log for problem determination.

Programmer Response: Determine whether a valid VTAM message ID is missing from one of the following message modules:

- ISTINCNO, the IBM-supplied default operation-level USS table
- ISTCFCMM, the IBM-supplied default message table
- The USS table specified by the USSTAB start option
- The USS table specified by the USSTAB operand on the APPL definition statement for a program operator application
- The USS table specified for an application program using the MODIFY TABLE command.

If *messageid* is a valid VTAM message ID, it should always be found in ISTINCNO, the IBM-supplied default operation-level USS table. This message is evidence that the USS tables have been improperly modified or installed.

If *messageid* is not a valid VTAM message ID, take the following actions:

- If you have access to IBMLink, search for known problems in this area. If no applicable matches are found, report the problem to IBM by using the Electronic Technical Report (ETR) option on IBMLink.
- If you do not have access to IBMLink, report the problem to the IBM Software Support Center.

IST999E VTAM MESSAGE LOST — INSUFFICIENT STORAGE

Explanation: VTAM tried to issue a message, but sufficient storage was not available. Any text issued by VTAM after **INSUFFICIENT STORAGE** should be ignored.

System Action: Processing continues.

Operator Response: If the message can be related to a command, and it is necessary that you see the full message, release storage by deactivating unused major nodes or canceling the job, and reenter the command that caused the message.

If the storage problem persists, enter a DISPLAY BFRUSE command. Save the system log and dump for problem determination.

Programmer Response: You might have underestimated storage requirements for the common service area (CSA). Increase storage as required. See *z/OS Communications Server: SNA Operation* for more information on the DISPLAY BFRUSE command. The *z/OS Communications Server: SNA Diagnosis Vol 1, Techniques and Procedures* provides additional information.

IST1001I ID= *applname* **[LUNAME=** *luname***] [LOGMODE=** *logmode***]**

Explanation: This message is the first in a group of messages that VTAM issues in response to a MODIFY CNOS, MODIFY DEFINE, or DISPLAY CNOS command. A complete description of the message group follows:

```
 IST1001I  ID= applname [LUNAME= luname ] [LOGMODE= logmode]
 IST1002I  RCPRI=rcpri RCSEC=rcsec
[IST1005I fieldname=value [fieldname=value] [fieldname=value]]
:
[IST1003I varname CNOS=cnosvalue DEFINE=definedvalue]
:
 IST314I   END
```

If *rcpri* and *rcsec* in message IST1002I indicate that the command did not execute successfully, VTAM issues only messages IST1001I and IST1002I. If the command executed successfully, VTAM issues the complete message group.

IST1001I

applname is the name of the LU 6.2 application program specified in the operator command.

luname is the name of the partner LU for this application program.

logmode is the name of the logon mode for this application program.

IST1002I

rcpri is the value of the primary return code issued by VTAM.

rcsec is the value of the secondary return code issued by VTAM. See the *z/OS Communications Server: IP and SNA Codes* for a detailed explanation of *rcpri* and *rcsec*.

IST1005I

This message is issued only if the command executed successfully.

Field names and their values are explained in the following table.

Field Name
Explanation

AUTOSES
The number of contention winner sessions that will be automatically started following a successful CNOS command.

CONVCAP
CONVCAP indicates whether sessions with the partner logical unit (LU) can support half-duplex conversations or both full-duplex and half-duplex conversations.

Value	Meaning
FDX	The partner LU can support both full-duplex and half-duplex conversations.
HDX	The partner LU can support only half-duplex conversations.

VTAM cannot display the value of CONVCAP until the first session with the partner LU has been established. If the first session has not been established, VTAM displays ***NA***.

CONVSECL
CONVSECL indicates the security level supported by the application program.

Value	Meaning
NONE	The application program does not accept FMH-5s that include security subfields.

CONV The application program accepts FMH-5s that include security subfields.

ALREADYV
The application program accepts FMH-5s that include security subfields and accepts the already verified indicator in place of the password subfield.

PERSISTV
The application program supports conversation-level security and accepts the persistent verification indicator in the conversation requests it receives.

AVPV The application program supports conversation-level security and accepts both the persistent verification indicator and the already verified indicator in the conversation requests it receives.

VTAM cannot display the value of CONVSECL until the first session has been established with the partner LU. If the first session with the partner LU has not been established, VTAM displays *****NA*****.

CONVSECP
CONVSECP indicates the security level supported by the partner LU.

Value **Meaning**

NONE The partner LU does not accept FMH-5s that include security subfields.

CONV The partner LU accepts FMH-5s that include security subfields.

ALREADYV
The partner LU accepts FMH-5s that include security subfields and accepts the already verified indicator in place of the password subfield.

PERSISTV
The partner LU supports conversation-level security and accepts the persistent verification indicator in the conversation requests it receives.

AVPV The partner LU supports conversation-level security and accepts both the persistent verification indicator and the already verified indicator in the conversation requests it receives.

VTAM cannot display the value of CONVSECP until the first session has been established with the partner LU. If the first session with the partner LU has not been established, VTAM displays *****NA*****.

DDRAINL
DDRAINL indicates whether VTAM accepts a CNOS request that allows an application program to drain its allocation requests.

Value **Meaning**

ALLOW
VTAM accepts a CNOS request that allows an application program to drain its allocation requests.

NALLOW
VTAM does not accept a CNOS request that allows an application program to drain its allocation requests.

DELETE
DELETE specifies whether the mode name can be deleted from the LU-mode table.

Value **Meaning**

ALLOW
The mode name can be deleted from the LU-mode table.

NALLOW
The mode name cannot be deleted from the LU-mode table.

DRAINL
DRAINL indicates whether the application program can drain its allocation requests.

Value **Meaning**

YES The application program can drain its allocation requests.

NO The application program cannot drain its allocation requests.

DRAINR
DRAINR indicates whether the partner LU can drain its allocation requests.

Value	Meaning
YES	The partner LU can drain its allocation requests.
NO	The partner LU cannot drain its allocation requests.

DRESPL
DRESPL specifies whether VTAM accepts a CNOS request specifying that the application program is responsible for deactivating sessions.

Value	Meaning
ALLOW	VTAM accepts a CNOS request specifying that the application program is responsible for deactivating sessions.
NALLOW	VTAM does not accept a CNOS request specifying that the application program is responsible for deactivating sessions.

ETYPE ETYPE indicates the type of LU entry that contains the specified LUNAME.

Value	Meaning
DISASSOC	LUNAME was found in a DISASSOC_NAME entry. The LU entry was previously a VARIANT_NAME entry, but is no longer associated with any other entry.
RCVD	LUNAME was found in a RCVD_NAME entry. This LU entry is created due to a session initiation request from the partner LU.
SUPPLIED	LUNAME was found in a SUPPLIED_NAME entry. This LU entry is created using the LU name specified on the APPCCMD macro or an OPERATOR command.
UNUSABLE	LUNAME was found in an UNUSABLE_NAME entry. The LU entry was marked unusable due to inappropriate name translations.
VARIANT	LUNAME was found in a VARIANT_NAME entry. This LU entry is created when the LUNAME, found in the Network-Qualified SLU Network Name Structured User Data subfield in the BIND response, is different than the LUNAME specified in the BIND request.

FREECNT
The number of active sessions with the partner LU that are free for use by a conversation.

QALLOC
The number of allocation requests waiting for a session to become free.

RESP RESP specifies whether the application program is responsible for deactivating sessions.

Value	Meaning
LOCAL	The application program is responsible for deactivating sessions.
REMOTE	The partner LU is responsible for deactivating sessions.

VTAM displays a value for RESP only in response to a MODIFY CNOS command. VTAM displays *****NA***** instead of a value when the MODIFY DEFINE or DISPLAY CNOS commands are entered.

SESSCAP
SESSCAP indicates the session capability of the partner LU.

Value **Meaning**

PSINGLE
The session capability of the partner LU has not been determined; the preliminary indication is that the partner LU cannot support parallel sessions.

SINGLE
The partner LU cannot support parallel sessions.

PPARALLE
The session capability of the partner LU has not been determined; the preliminary indication is that the partner LU can support parallel sessions.

PARALLEL
The partner LU can support parallel sessions.

SESSCNT
The number of active sessions with the partner LU that have the specified mode name.

SYNCLVL
SYNCLVL specifies the synchronization level supported by the conversation.

Value **Meaning**

NONE No synchronization level is supported.

CONFIRM
The CONFIRM synchronization level is supported.

SYNCPT
The SYNCPT and CONFIRM synchronization levels are supported.

WINLCNT
The number of active sessions for which the application program is the contention winner.

WINRCNT
The number of active sessions for which the partner LU is the contention winner.

See the *z/OS Communications Server: SNA Programmer's LU 6.2 Guide* for a more detailed explanation of these field names and their values.

IST1003I

This message is issued only if the command executed successfully.

varname can be one of the following:

MINWINL
The minimum number of parallel sessions for which the application program is guaranteed to be the contention winner for the mode name specified in the LOGMODE operand.

MINWINR
The minimum number of parallel sessions for which the partner LU is guaranteed to be the contention winner for the mode name specified in the LOGMODE operand.

SESSLIM
The maximum number of LU-LU sessions allowed between the application program and the partner LU for the mode name specified in the LOGMODE operand.

cnosvalue is the value of *varname* for CNOS. This is the value accepted by both partner LUs.

definedvalue is the value of *varname* for DEFINE. VTAM uses this value internally when negotiating CNOS origination from the partner LU.

System Action: Processing continues.

Operator Response: If messages IST1005I and IST1003I are not in this group, save the system log for problem determination.

Otherwise, no action is required.

Programmer Response: Use the system log and return code values in IST1002I to assist you in solving the problem.

IST1002I **RCPRI=** *rcpri* **RCSEC=** *rcsec*

Explanation: VTAM issues this message as part of a group of messages. The first message in the group is either IST1001I, IST1110I or IST1472I. See the explanation of the first message in the group for a complete description.

rcpri is the value of the primary return code issued by VTAM.

rcsec is the value of the secondary return code issued by VTAM.

See the *z/OS Communications Server: IP and SNA Codes* for a detailed explanation of *rcpri* and *rcsec*.

IST1003I *varname* **CNOS=***cnosvalue* **DEFINE=***definedvalue*

Explanation: VTAM issues this message as part of a group of messages. The first message in this group is IST1001I. See the explanation of that message for a complete description.

IST1004I *command* **FOR** *nodename* **FAILED –** *reason*

Explanation: VTAM issues this message when one of the following commands fails:
- DISPLAY CNOS
- DISPLAY CONVID
- DISPLAY LMTBL,TYPE=LUNAME
- DISPLAY LMTBL,TYPE=LOGMODE
- DISPLAY STORUSE
- MODIFY CNOS
- MODIFY DEFINE

nodename is the name of the local application program that was specified on the *command*. The network ID of *nodename* is the same as the host network ID.

reason can be one of the following:

APPLICATION JOB NOT FOUND
The requested job name is not found.

APPLICATION NOT ACTIVE
The application has not opened its ACB.

APPLICATION NOT FOUND
The requested application is not found.

DATA SPACE NOT FOUND
The requested data space is not found.

DEACTIVATION IN PROGRESS
The application program issued a CLOSE that has not yet completed, a VARY INACT command has been issued for the application program, or VTAM has become inactive.

INSUFFICIENT STORAGE
There is not enough storage available to complete the request.

NO APPLICATION ACTIVE
No VTAM application has opened its ACB.

NO APPLICATION DATA SPACE
The application does not have a VTAM data space.

NODE ACB IS CLOSED
The application program closed its application control block (ACB).

NODE NOT ACTIVE
The application program has not opened its ACB.

IST1004I

NODE NOT APPC CAPABLE
Either *nodename* is not the name of an application program, or *nodename* is the name of an application program but APPC=YES was not specified on the APPL definition statement.

OPERATOR COMMAND NOT ALLOWED
The application program is APPC capable, but OPERCNOS=ALLOW was not specified on the APPL definition statement.

POOL NOT FOUND
The requested pool is not found.

VTAM ERROR
VTAM abended while processing the command.

System Action: VTAM rejects the command. Processing continues.

Operator Response: The value of *reason* determines the response:

APPLICATION JOB NOT FOUND
Retry the command with the correct job name.

APPLICATION NOT ACTIVE
Activate the application program with a VARY ACT command. If this does not solve the problem, save the system log for problem determination.

APPLICATION NOT FOUND
Retry the command with the correct application name.

DATA SPACE NOT FOUND
Retry the command with the correct data space name.

DEACTIVATION IN PROGRESS
Take the appropriate action:

- If a CLOSE ACB or VARY INACT command has been issued, enter a VARY ACT command to restart the application program.
- If VTAM has become inactive, save the system log for problem determination.

INSUFFICIENT STORAGE
Wait a short time and reenter the command. If VTAM continues to issue this message, enter the DISPLAY BFRUSE or DISPLAY STORUSE command. Save the system log and dump for problem determination.

NO APPLICATION ACTIVE
Retry the command once an application has opened its ACB.

NO APPLICATION DATA SPACE
If *nodename* is ISTPDCLU, no action is necessary. If any other application is specified, save the system log for problem determination.

NODE ACB IS CLOSED
Activate the application program with a VARY ACT command. If this does not solve the problem, save the system log for problem determination.

NODE NOT ACTIVE
Activate the application program with a VARY ACT command. If this does not solve the problem, save the system log for problem determination.

NODE NOT APPC CAPABLE
Determine if the specified *nodename* is correct.

- If *nodename* is not correct, retry the command specifying the correct *nodename*.
- If *nodename* is correct, save the system log for problem determination.

OPERATOR COMMAND NOT ALLOWED
Save the system log for problem determination.

POOL NOT FOUND
Retry the command with the correct pool name.

VTAM ERROR
Save the system log and dump for problem determination.

Programmer Response: The value of *reason* determines the response:

APPLICATION JOB NOT FOUND
None.

APPLICATION NOT FOUND
None.

APPLICATION NOT ACTIVE
If the operator entered a VARY ACT command to activate the application program and the problem persists, the application program must open its ACB.

DATA SPACE NOT FOUND
None.

DEACTIVATION IN PROGRESS
If VTAM has become inactive, reactivate VTAM.

INSUFFICIENT STORAGE
You might want to redefine your buffer pool or CSA start options. If the start option cannot be modified using the MODIFY VTAMOPTS command, you must modify the VTAM start options file (ATCSTRxx) and restart VTAM to use the start option.

- See the *z/OS Communications Server: SNA Migration* to determine the storage requirements for VTAM.
- See the *z/OS Communications Server: SNA Resource Definition Reference* for a description of VTAM start options.
- See the *z/OS Communications Server: SNA Operation* for information about the DISPLAY BFRUSE Command, the DISPLAY STORUSE Command, and the MODIFY VTAMOPTS Command.
- See the *z/OS Communications Server: SNA Network Implementation Guide* for an explanation and description of buffer pools and for general information on buffer pool specification and allocation.
- See the *z/OS Communications Server: SNA Diagnosis Vol 2, FFST Dumps and the VIT* for information about analyzing dumps and about analyzing storage using the VIT analysis tool, if external trace is active.

NO APPLICATION ACTIVE
None.

NO APPLICATION DATA SPACE
If an application other than ISTPDCLU is specified, take the following actions:

- If you have access to IBMLink, search for known problems in this area. If no applicable matches are found, report the problem to IBM by using the Electronic Technical Report (ETR) option on IBMLink.
- If you do not have access to IBMLink, report the problem to the IBM software support center.

NODE ACB IS CLOSED
If the operator entered a VARY ACT command to activate the application program and the problem persists, the application program must open its ACB.

NODE NOT ACTIVE
If the operator entered a VARY ACT command to activate the application program and the problem persists, the application program must open its ACB.

NODE NOT APPC CAPABLE
Enter a VARY INACT command to deactivate the major node. Enter a DISPLAY ID command for the associated minor node to ensure that the major node is an application program. Examine the APPL definition statement to ensure that APPC=YES was specified. You may need to modify the APPL definition statement, specifying APPC=YES, restart the application program, and retry the command.

OPERATOR COMMAND NOT ALLOWED
Enter a VARY INACT command to deactivate the application program. Modify the APPL definition statement, specifying OPERCNOS=ALLOW, restart the application program, and retry the command.

POOL NOT FOUND
None.

VTAM ERROR
VTAM has abended while processing a DISPLAY CNOS; DISPLAY LMTBL,TYPE=LUNAME; DISPLAY

LMTBL,TYPE=LOGMODE; DISPLAY CONVID; MODIFY CNOS; or MODIFY DEFINE command. See the *z/OS Communications Server: SNA Diagnosis Vol 1, Techniques and Procedures* for information on the abend procedure.

If you cannot determine the cause of the problem from the output provided or need additional assistance, contact the IBM Software Support Center.

IST1005I *fieldname=value* **[***fieldname=value***] [***fieldname=value***]**

Explanation: VTAM issues this message as part of a group of messages. The first message in this group is IST1001I. See the explanation of that message for a complete description.

IST1006I *nametype* **NAMES DEFINED [IN LU** *luname***] FOR** *applname*

Explanation: This message is the first of a group of messages that VTAM issues in response to a DISPLAY LMTBL command. Possible message groups follow.

If MSGLVL=BASE is specified:

For a DISPLAY LMTBL,TYPE=LUNAME command, the message group is as follows:

```
IST1006I nametype NAMES DEFINED FOR applname
IST988I  resourcename_1...resourcename_n
⋮
IST314I END
```

For a DISPLAY LMTBL,TYPE=LOGMODE command, the message group is as follows:

```
IST1006I nametype NAMES DEFINED IN LU luname FOR applname
IST988I  resourcename_1...resourcename_n
⋮
IST314I END
```

If MSGLVL=V4R1 or above is specified:

For a DISPLAY LMTBL,TYPE=LUNAME command, the message group is as follows:

```
IST1006I nametype NAMES DEFINED FOR applname
IST1154I resourcename_1...resourcename_n
⋮
IST314I END
```

For a DISPLAY LMTBL,TYPE=LOGMODE command, the message group is as follows:

```
IST1006I nametype NAMES DEFINED IN LU luname FOR applname
IST988I resourcename_1...resourcename_n
⋮
IST314I END
```

For a DISPLAY LMTBL,TYPE=LUNAME,SCOPE=ALL command, the message group is as follows:

```
IST1006I nametype NAMES DEFINED FOR applname
IST1409I luname ASSOC = associatedlu ETYPE = entrytype
⋮
IST314I END
```

See the *z/OS Communications Server: SNA Resource Definition Reference* for a description of the MSGLEVEL start option and the MSGLVL operand on the USSMSG macro.

IST1006I

Message IST1006I is a header for messages IST988I, IST1154I, and IST1409I, which lists all LU or logon mode names defined for the partner LU in the LU-mode table.

nametype is either **LU** or **LOGMODE**, depending on the value of the TYPE operand in the DISPLAY LMTBL command.

luname is the name of the partner LU for this application program.

applname is the name of the LU 6.2 application program for which DISPLAY information was requested.

IST988I

If network-qualified names are not displayed, VTAM issues this message.

resourcename is the LU or logon mode name.

IST1154I

If network-qualified names are displayed, VTAM issues this message.

resourcename is the LU name.

IST1409I

luname is the LU name.

associatedlu is the associated LU name. If the *associatedlu* differs from *luname* then *associatedlu* is used to associate this LU entry to another LU entry created for the same partner LU.

entrytype is the type of LU entry that contains the LUNAME specified by *luname*, and can be one of the following.

Value	Meaning
SUPPLIED	LUNAME was found in a SUPPLIED_NAME entry. This LU entry is created using the LU name specified on the APPCCMD macro or an OPERATOR command.
VARIANT	LUNAME was found in a VARIANT_NAME entry. This LU entry is created when the LUNAME, found in the Network-Qualified SLU Network Name Structured User Data subfield in the BIND response, is different than the LUNAME specified in the BIND request.
RCVD	LUNAME was found in a RCVD_NAME entry. This LU entry is created due to a session initiation request from the partner LU.
UNUSABLE	LUNAME was found in an UNUSABLE_NAME entry. The LU entry was marked unusable due to inappropriate name translations.
DISASSOC	LUNAME was found in a DISASSOC_NAME entry. The LU entry contains a name that is not being used as a generic or uservar name for the partner LU.

System Action: Processing continues.

Operator Response: None.

Programmer Response: None.

IST1007I **PARTNER =** *luname*, **LOGMODE =** *logmode*

Explanation: VTAM issues this message as part of a group of messages. The first message in this group is IST1040I. See the explanation of that message for a complete description.

IST1008I **CONVID =** *convid*, **STATUS =** *status*, **ETIME =** *etime*

Explanation: VTAM issues this message as part of a group of messages. The first message in this group is IST1040I. See the explanation of that message for a complete description.

IST1009I **SID =** *sid*, **HPDT =** *hpdtvalue*

Explanation: VTAM issues this message as part of a group of messages. The first message in this group is IST1040I. See the explanation of that message for a complete description.

IST1010I **NO CONVERSATION(S) FOUND FOR** *applname*

Explanation: VTAM issues this message in response to a DISPLAY CONVID command when no conversations for application program *applname* are found based on the specified operands.

applname is the name of the LU 6.2 application program for which DISPLAY information was requested.

System Action: Processing continues.

Operator Response: None.

Programmer Response: None.

IST1011I ENTRY *entryname* **NOT FOUND IN** *tabletype tablename* **FOR** *resourcename*

Explanation: VTAM issues this message during session initiation if it cannot find a table entry for a resource. No *entryname* entry exists in the *tabletype* table *tablename* that is defined for the resource *resourcename*.

entryname is the entry that was specified on the LU, LOCAL, TERMINAL, or APPL definition statement.

tabletype is **MDLTAB** (model name table) or **ASLTAB** (associated LU table).

tablename is the name of the table.

resourcename is the 1–8 character resource name specified on the LU, LOCAL, TERMINAL, or APPL definition statement. *entryname* is defined for this resource.

System Action: If *tabletype* is **MDLTAB**, session establishment continues with no model name provided to the PLU.

If *tabletype* is **ASLTAB**, session establishment continues with no associated LU names provided to the PLU.

Operator Response: Save the system log for problem determination. Provide the *entryname* and *tablename*.

Programmer Response: Verify that *tablename* is the correct table for *resourcename*. If it is not, do one of the following:

- Change the *tablename* in the logical unit definition and reactivate the logical unit.
- Enter a MODIFY TABLE command to associate the correct table with the logical unit.

If *tablename* is correct, verify that the *entryname* specified in the logical unit definition matches the *entryname* in the table. If the *entryname*s do not match, do one of the following:

- Change the *entryname* in the logical unit definition and reactivate the logical unit.
- Add, replace, or correct the *entryname* in the table and enter MODIFY TABLE to use the updated table.

IST1012I NO PARTNER LU(S) DEFINED FOR *applname*

Explanation: VTAM issues this message in response to a DISPLAY LMTBL, TYPE=LUNAME command when there are no LU entries defined in the LU-mode table of application program *applname*.

applname is the name of the LU 6.2 application program for which DISPLAY information was requested.

System Action: Processing continues.

Operator Response: None.

Programmer Response: None.

IST1013I NO LOGMODE(S) DEFINED IN LU *luname* **FOR** *applname*

Explanation: VTAM issues this message in response to a DISPLAY LMTBL, TYPE=LOGMODE command when there are no logon mode entries defined for *luname* in the LU-mode table of application program *applname*.

luname is the name of the specified LU.

applname is the name of the LU 6.2 application program for which DISPLAY information was requested.

System Action: Processing continues.

Operator Response: None.

Programmer Response: None.

IST1015I APPLICATION SUPPLIED *parameter_name* **=** *parameter_value*

Explanation: This message is part of a message group. The first message in the group is IST663I. See the explanation of that message for a description of the entire message group.

This message is the first of a subgroup of messages within the IST663I group of messages. A complete description of the message subgroup follows.

```
 IST1015I APPLICATION SUPPLIED parameter_name = parameter_value
[IST1028I parameter_value]
```

This message subgroup is issued only to the operator of the host of the secondary logical unit.

parameter_name is the name of the parameter displayed in the message subgroup, and is one of the following:

CPNAME
parameter_value displays the control point (CP) name of the type 2.1 peripheral node supplied by the application program for the switched connection.

GROUP NAME
parameter_value displays the name of a GROUP definition statement in the NCP or channel attachment major node that defines a group of SDLC switched links.

DIAL NUMBER
parameter_value displays the line number supplied by the application program for the switched connection. If *parameter_value* contains unprintable characters, the message will appear as follows:

```
IST1015I APPLICATION SUPPLIED DIAL NUMBER=X'parameter_value'
```

If the message contains any unprintable characters, the dial number is preceded by an “X”. If the message contains only printable characters, the dial number is not preceded by an “X”.

DLCADDR SUBFIELD
parameter_value displays the DLCADDR subfield supplied by the application program for the switched connection. If *parameter_value* contains unprintable characters, the message will appear as follows:

```
IST1015I APPLICATION SUPPLIED DLCADDR SUBFIELD=yy,X'parameter_value'
```

If the message contains any unprintable characters, the DLCADDR subfield is preceded by an “X”. If the message contains only printable characters, the DLCADDR subfield is not preceded by an “X”.

yy is the subfield ID.

DIRECT CALL LINE
parameter_value displays the name of the line supplied by the application program for the switched connection.

IDBLK/IDNUM
parameter_value displays the identification block (IDBLK) and identification number (IDNUM) supplied by the application program for the switched connection. IDBLK identifies the device type and IDNUM identifies the specific device or connection for the switched connection.

For IDBLK/IDNUM, *parameter_value* is 64 characters long; there are no spaces between the values of IDBLK and IDNUM. This field is always displayed in hex. VTAM displays the first portion of *parameter_value* in IST1015I and the remainder in IST1028I. The message subgroup will appear as follows:

```
IST1015I APPLICATION SUPPLIED IDBLK/IDNUM=X'parameter_value
IST1028I parameter_value'
```

See the *z/OS Communications Server: SNA Resource Definition Reference* for more information on the IDBLK, IDNUM, and CPNAME operands for switched major nodes.

System Action: The session initiation attempt fails.

Operator Response: Save the system log for problem determination.

Programmer Response: Use the information in messages IST663I, IST664I, and IST889I to determine the cause of the error. Possibilities include dial numbers not in the correct form or an XID failure. This is not necessarily a system programmer error. If it is not, notify the application programmer.

IST1016I DYNAMIC DEFINITION OF *nodename* FAILED

Explanation: This message is the first in a group of messages that VTAM issues when an error is detected while building a dynamic switched physical unit or logical unit. A complete description of the message group follows.

```
 IST1016I DYNAMIC DEFINITION OF nodename FAILED
[IST1061I FAILURE OCCURRED ON puname AT locaddr]
 IST523I REASON = reason
 IST314I END
```

IST1016I

nodename is the name of the PU or LU that could not be built. *nodename* can be *NA* if the name contains non-printable characters.

IST1061I

VTAM issues message IST1061I when the SDDLU dynamic definition of an LU fails.

puname is the name of the PU for which a dynamic LU could not be built.

locaddr is the address of the LU that could not be built.

IST523I

reason indicates the reason for the failure and is one of the following:

ERROR IN SDDLU EXIT OR EXIT NOT AVAILABLE
Either the selection of definitions for dependent LUs (SDDLU) exit routine has not been activated, or there was an error in SDDLU exit processing. Errors that the SDDLU exit routine can detect include:
– The SDDLU exit routine could not generate an LU name.
– The SDDLU exit routine could not determine which model LU name to use.

INSUFFICIENT STORAGE
Storage could not be obtained for the dynamic resource.

INVALID NAME
Either the node name or the model name returned by the configuration services XID exit routine or the SDDLU exit routine is not valid. Resource definition fails for the node with the name that is not valid.

INVALID RESOURCE TYPE
The definition for the independent LU was attempted. This is not a valid resource type.

MODEL LU GROUP *lugroup* **NOT FOUND**
The model LU group specified on the PU definition statement of *puname* is not active, or the LU group name entered on the VARY ACT command is not a valid VTAM name.

MODEL *modelname* **NOT FOUND**
The model PU or LU could not be found.

MODEL *modelname* **TYPE DOES NOT MATCH NODE TYPE**
The type of the model is incorrect. A PU model was specified when describing an LU node, or an LU model was specified when describing a PU node. *modelname* is the name of a model PU or LU.

NO MODEL MATCHES *modelname*
The model name of the powering on device does not match any of the model LUs within the LUGROUP specified on the PU. *modelname* is the machine type and model number.

puname **DOES NOT SUPPORT DEPENDENT LOGICAL UNITS**
Switched PU *puname* does not support dependent LUs because the link from the remote PU is not configured to support dependent LUs (ACTPU is suppressed).

VALUE FOR LOCADDR NOT VALID
An address override of LOCADDR was requested but the new value was not valid.

System Action: The definition of this resource cannot be completed. If resource definition fails for an LU, VTAM attempts to define any remaining LUs. If resource definition fails for a PU, VTAM does not attempt to define any LUs associated with the failed PU.

Operator Response:

INSUFFICIENT STORAGE
Enter a DISPLAY BFRUSE or DISPLAY STORUSE command. Save the system log and request a dump for problem determination.

MODEL LU GROUP *lugroup* **NOT FOUND**
Enter a VARY ACT command to activate the LUGROUP definition that contains the *lugroup* model LU group. Save the system log for problem determination.

MODEL *modelname* **NOT FOUND**
Enter a DISPLAY MODELS command to list all defined models. Either the model major node has not been activated or the name requested by the exit is incorrect.

- Activate the model major node if it has not been activated. After the model major node has been activated, dial in can be attempted again.

  Note: The dial in must be done by the remote device; the operator generally cannot perform the dial in.
- If the model major node name is incorrect, save the system log for problem determination.

puname **DOES NOT SUPPORT DEPENDENT LOGICAL UNITS**
No action is necessary unless this host should be identified as the owner of dependent LUs off of the remote PU. If this is the case, the remote PU must be reconfigured so it will indicate to this host that ACTPU should not be suppressed.

All other *reason***s**
Save the system log for problem determination.

Programmer Response:

ERROR IN SDDLU EXIT OR EXIT NOT AVAILABLE
Verify that the exit is in the VTAMLIB and that the exit has been activated. If the exit is active, there is an error in the exit that must be corrected. See *z/OS Communications Server: SNA Customization* for more information on the SDDLU exit routine.

INSUFFICIENT STORAGE
Increase storage as required.

- See the *z/OS Communications Server: SNA Migration* to determine the storage requirements for VTAM.
- See the *z/OS Communications Server: SNA Resource Definition Reference* for a description of VTAM start options.
- See the *z/OS Communications Server: SNA Operation* for information about the DISPLAY BFRUSE Command, the DISPLAY STORUSE Command, and the MODIFY VTAMOPTS Command.
- See the *z/OS Communications Server: SNA Network Implementation Guide* for an explanation and description of buffer pools and for general information on buffer pool specification and allocation.
- See the *z/OS Communications Server: SNA Diagnosis Vol 2, FFST Dumps and the VIT* for information about analyzing dumps and about analyzing storage using the VIT analysis tool, if external trace is active.

INVALID NAME
Correct the name returned by the exit routine. After the exit routine has been corrected, dial in can be attempted again.

INVALID RESOURCE TYPE
Ensure that the exit routine does not specify an LU model with a LOCADDR of 0 or an address override of 0.

MODEL LU GROUP *lugroup* **NOT FOUND**
Activate the LUGROUP definition that contains the model LU group *lugroup*. Specify an active LU group on the LUGROUP keyword in the PU definition statement for *puname*.

MODEL *modelname* **NOT FOUND**
The switched connection installation exit routine, ISTEXCCS, incorrectly specified the model name. Ensure that the exit routine specifies a valid model name. After the exit routine has been corrected, dial in can be attempted again.

MODEL *modelname* **RESOURCE TYPE DOES NOT MATCH NODE TYPE**
Ensure that the exit routine specifies a PU model when defining a PU, and an LU model when defining an LU. After the exit routine has been corrected, dial in can be attempted again.

NO MODEL MATCHES *modelname*
Add a model LU definition statement under the appropriate LUGROUP that will match the model acronym in question.

VALUE FOR LOCADDR NOT VALID
Correct the exit routine. After the exit routine has been corrected, dial in can be attempted again.

IST1017I MODELS:

Explanation: This message is part of a group of messages that VTAM issues in response to a DISPLAY ID command for a model major node. Following this message, VTAM issues message IST089I once for each resource defined in the model major node. See the explanations of the other messages in this group for more information.

System Action: Processing continues.

Operator Response: None.

Programmer Response: None.

IST1018I MODEL MAJOR NODE = *major_node_name*

Explanation: This message is part of a group of messages that VTAM issues in response to a DISPLAY MODELS command. See the explanations of the other messages in this group for more information.

major node name is the name of the model major node.

System Action: Processing continues.

Operator Response: None.

Programmer Response: None.

IST1019I USERVAR VALUE CLASS TYPE EXIT APPC

Explanation: This message is the first of a group of messages that VTAM issues in response to a DISPLAY USERVAR command. A complete description of the message group follows.

```
 IST1019I USERVAR  VALUE             CLASS TYPE     EXIT APPC
 IST1029I uservar  value             class type     exit {YES|NO}
⋮
[IST1315I DISPLAY TRUNCATED AT MAX = number]
 IST1454I count USERVAR(S) DISPLAYED
 IST314I END
```

IST1019I

This message is a header message for information displayed in IST1029I.

IST1029I

VTAM issues message IST1029I once for each USERVAR being displayed.

uservar is the name of the USERVAR.

value is the value of the USERVAR. *value* is a network qualified name in the form of *netid.name*.

exit can be **YES** or **NO**, indicating whether the USERVAR exit is used for this USERVAR.

class can be either **USER** or **AUTO**. If *class* is **AUTO**, VTAM maintains this USERVAR. If *class* is **USER**, the user maintains this USERVAR.

The values of *type* are as follows:

STATIC
The USERVAR needs to be queried by other SSCPs only once.

DYNAMIC
The USERVAR needs to be queried by other SSCPs after an abnormal termination of a session using the USERVAR.

VOLATILE
The USERVAR needs to be queried by other SSCPs when a session is initiated using the USERVAR.

APPC is either **YES** or **NO**, and indicates whether this USERVAR supports advanced program-to-program communications (APPC).

IST1315I

number is the value specified for the MAX operand.

IST1454I

count is the total number of USERVARs displayed.

System Action: Processing continues.

Operator Response: None.

Programmer Response: None.

IST1020I INSUFFICIENT STORAGE–DATA SPACE *dspname* **FULL**

Explanation: VTAM issues this message when data space *dspname* is full.

dspname is the name of the data space created by VTAM. The data space name is generated automatically when the data space is created by VTAM and is in one of the following formats:

IST*ccccc*
ccccc is **0-FFFFC**

*ccccc***IST**
ccccc is **1-99999**

System Action: Processing continues. The action depends on why the requested storage was needed. Other messages may follow identifying the effect this storage condition has on VTAM.

Operator Response: Enter a DISPLAY STORUSE command for *dspname*. Save the system log for problem determination.

Programmer Response: Usually this problem occurs when data is either coming in faster than the application can receive it or the application is not issuing RECEIVEs.

- Ensure that sessions with this application have proper pacing counts.
- Verify that the application is not having a problem that is preventing it from issuing RECEIVEs.
- If you cannot determine the cause of the problem from the output provided, take the following actions:
  - If you have access to IBMLink, search for known problems in this area. If no applicable matches are found, report the problem to IBM by using the Electronic Technical Report (ETR) option on IBMLink.
  - If you do not have access to IBMLink, report the problem to the IBM software support center. Provide the information in the output from the DISPLAY STORUSE command.

IST1021I MEDIUM = *medium***, ADAPNO =** *adapno***, CUA =** *device_address***, SNA SAP =** *snasap*

Explanation: VTAM issues this message when a DISPLAY ID command is entered for an external communication adapter (XCA) major node.

medium is the type of LAN represented by this XCA major node. The type is specified on the MEDIUM operand of the PORT definition statement. *medium* can be one of the following:

BOXMGR
3172 Problem Management

CSMA/CD
802.3 LAN

FDDI
Fiber distributed data interface

RING
Token-ring LAN

adapno is the decimal adapter slot number specified on the ADAPNO operand on the PORT definition statement. If *medium* is **BOXMGR**, VTAM displays ***NA***.

device_address is the hexadecimal channel device address specified on the CUADDR operand on the PORT definition statement.

snasap is the decimal SNA service access point address specified on the SAPADDR operand on the PORT definition statement. The SNA service access point address is displayed if an SNA line is defined within the XCA major node. If an SNA line is not defined, VTAM displays ***NA***. The default value (4) is shown if a value was not specified on the PORT definition statement and an SNA line is defined within the XCA major node. If *medium* is **BOXMGR**, VTAM displays ***NA***.

System Action: Processing continues.

Operator Response: None.

Programmer Response: None.

IST1022I WRBUF = *wrbuf*

Explanation: VTAM issues this message as part of a message group. The first message in the group is IST577I. See the explanation of the first message in the group for a complete description.

IST1023E START I/O TIMEOUT OCCURRED FOR CUA=*device_address*

Explanation: VTAM initiated an I/O operation with a LAN channel station, and start I/O timeout occurred for one of the following reasons:

1. An interrupt was not received within the time specified for that I/O operation.
2. Certain asynchronous events did not occur within the time specified for that I/O operation.
3. The LAN channel station did not respond to a channel request from VTAM.

device_address is the hexadecimal address of the subchannel used to communicate with the LAN channel station.

System Action: Processing continues.

If the LAN channel station does not respond within the defined interrupt interval, data will be lost and all lines using this subchannel will become inoperative. The default interrupt interval is 3 minutes. For more information, see the description of the MIHTMOUT start option in the *z/OS Communications Server: SNA Resource Definition Reference*.

Operator Response:

- If the LAN channel station was stopped, normal operation will resume when you restart the LAN channel station.
- If the LAN channel station has failed, take the following actions:
  1. Deactivate all lines using this subchannel because the lines cannot be used.
  2. Check for a hardware problem:
     - Run your operating system service aid program to determine if MDR/OBR information has been recorded. See the *EREP User's Guide and Reference* for more information on using EREP. If you use a network management application such as the NetView program, check to see whether an alert was recorded for this problem.
     - If you cannot determine the cause of the problem from the output provided or need additional assistance, contact the IBM hardware support center. If available, provide the MDR/OBR information from your operating system service aid program or the alert information recorded by your network management application.

Otherwise, no action is required.

Programmer Response: None.

IST1024I I/O ERROR ON READ FOR CUA = *device_address***–BYTE COUNT MISMATCH**

Explanation: VTAM detected an input buffer error during a READ operation for a LAN channel station at *device_address*. The length of the buffer containing data units does not match the total length of all data units.

device_address is the hexadecimal address of the channel used to communicate with the hardware adapter.

System Action: The device is deactivated. Data will be lost and all lines using this device will become inoperative.

Operator Response: This is probably a hardware error. Save the system log for problem determination. Run your

operating system service aid program to determine if MDR/OBR information has been recorded. See the *EREP User's Guide and Reference* for more information on using EREP.

If you use a network management application such as NetView, check to see if an alert was recorded for this problem.

If the failure continues, run a CCW trace to trace data from this device.

Programmer Response: If the output does not indicate a hardware problem, and you cannot determine the cause of the problem, take the following actions:

- If you have access to IBMLink, search for known problems in this area. If no applicable matches are found, report the problem to IBM by using the Electronic Technical Report (ETR) option on IBMLink.
- If you do not have access to IBMLink, report the problem to the IBM software support center.

  If available, provide the MDR/OBR information from your operating system service aid program or the alert information recorded by your network management application.

IST1028I *parameter_value*

Explanation: VTAM issues this message as part of a group of messages. See the explanation of message IST1015I for a full description.

IST1029I *uservar value class type exit* **{YES|NO}**

Explanation: VTAM issues this message as part of a group of messages. The first message in this group is IST1019I. See the explanation of that message for a full description.

IST1030I **USERVAR EXIT IS** *exitname*

Explanation: VTAM issues this message as part of a group of messages in response to a MODIFY USERVAR command. The first message in the group is either IST825I or IST1283I. See the explanation of the first message for a complete description of the group.

Note: This message is percolated. See "Message rerouting and percolation" on page 710 for additional information.

IST1031I **MODIFY COMMAND FAILED —** *uservar***: EXIT FAILURE, CODE** *code*

Explanation: VTAM issues this message when a MODIFY USERVAR command invokes a USERVAR exit and a failure occurs.

Possible values of *code* are:

X'0008'
The exit is not defined.

X'0010'
VTAM is already in the desired state.

X'0014'
There is not enough storage to activate the USERVAR exit.

X'0018'
Activation is not permitted by the requestor.

X'001C'
An error occurred during activation or deactivation.

X'001E'
The exit is being deactivated.

X'0020'
A storage failure occurred. This is the code issued by the default USERVAR exit for this situation. If another code is issued, save the system log for problem determination.

X'0028'
Activation of the exit is already in progress.

X'003A'
The invocation flag is not valid. This is the code issued by the default USERVAR exit for this situation. If another code is issued, save the system log for problem determination.

X'003C'
The entry code is not valid. This is the code issued by the default USERVAR exit for this situation. If another code is issued, save the system log for problem determination.

X'00F0'
The exit is not active.

X'00F1'
The exit is pending deactivation.

X'00F2'
The exit abended.

System Action: VTAM rejects the command. If *uservar* was previously defined, it retains its previous value. Otherwise, it will remain undefined until the reason for the failure is corrected. Other processing continues.

Operator Response:

X'0008'
Ensure that you entered the name of the exit correctly. If problems persist, save the system log for problem determination.

X'0010'
None.

X'0014'
Ensure that you entered the name of the exit correctly. If problems persist, enter a DISPLAY BFRUSE or DISPLAY STORUSE command to verify that there is sufficient storage to activate the USERVAR exit. Save the system log and request a dump for problem determination.

X'0018'
Ensure that you entered the name of the exit correctly.

X'001C'
Ensure that you entered the name of the exit correctly. If problems persist, save the system log for problem determination.

X'001E'
Reactivate the exit if desired.

X'0020'
Ensure that you entered the name of the exit correctly. If problems persist, save the system log for problem determination.

X'0028'
None.

X'003A'
Ensure that you entered the name of the exit correctly. If problems persist, save the system log for problem determination.

X'003C'
Ensure that you entered the name of the exit correctly. If problems persist, save the system log for problem determination.

X'00F0'
Activate the exit if desired.

X'00F1'
None.

X'00F2'
Save the system log for problem determination.

Programmer Response:

X'0008'
Ensure that the exit is correctly defined. Messages issued at VTAM initialization may provide additional information about the cause of the problem.

X'0010'
None.

X'0014'
Ensure that the operator entered the buffer pool or CSA start options as specified in the start procedures. You might want to redefine your buffer pool or CSA start options. If the start option cannot be modified using the MODIFY VTAMOPTS command, you must modify the VTAM start options file (ATCSTRxx) and restart VTAM to use the start option.

- See the *z/OS Communications Server: SNA Migration* to determine the storage requirements for VTAM.
- See the *z/OS Communications Server: SNA Resource Definition Reference* for a description of VTAM start options.
- See the *z/OS Communications Server: SNA Operation* for information about the DISPLAY BFRUSE Command, the DISPLAY STORUSE Command, and the MODIFY VTAMOPTS Command.
- See the *z/OS Communications Server: SNA Network Implementation Guide* for an explanation and description of buffer pools and for general information on buffer pool specification and allocation.
- See the *z/OS Communications Server: SNA Diagnosis Vol 2, FFST Dumps and the VIT* for information about analyzing dumps and about analyzing storage using the VIT analysis tool, if external trace is active.

X'0018'
None.

X'001C'
Check the exit for possible errors. See *z/OS Communications Server: SNA Customization* for more information.

X'001E'
None.

X'0020'
Check the exit for possible errors. See *z/OS Communications Server: SNA Customization* for more information.

X'0028'
None.

X'003A'
Check the exit for possible errors. See *z/OS Communications Server: SNA Customization* for more information.

X'003C'
Check the exit for possible errors. See *z/OS Communications Server: SNA Customization* for more information.

X'00F0'
None.

X'00F1'
None.

X'00F2'
Check the exit for possible errors. See *z/OS Communications Server: SNA Customization* for more information.

IST1032I *poolname* **BUFFER SIZE TOO SMALL-SIZE MUST BE AT LEAST** *minsize*

Explanation: VTAM issues this message in response to a VARY ACT command when the buffers are too small. The buffer size of buffer pool *poolname* must be at least *minsize* for VTAM to activate a line.

poolname is the name of the buffer pool. See the *z/OS Communications Server: SNA Network Implementation Guide* for an explanation and description of buffer pools and for general information on buffer pool specification and allocation.

minsize is the minimum buffer size for the type of line you tried to activate.

System Action: Line activation fails. Processing continues.

Operator Response: Save the system log for problem determination.

Programmer Response: Change the buffer size for *poolname* in the VTAM start list ATCSTR*xx*. After the VTAM start list is corrected, restart VTAM and enter a VARY ACT command for the line.

IST1033I *uservar* **ALREADY DEFINED FOR APPC SESSIONS OF** *applname*

Explanation: VTAM issues this message in response to a MODIFY USERVAR command when APPC=YES is specified and *uservar* has already been defined for *applname*. Another USERVAR with APPC=YES cannot be defined for this application program.

uservar is the name of the USERVAR which is currently defined for this application program.

applname is the name of the application program specified in the MODIFY USERVAR command.

System Action: VTAM rejects the command and no changes are made to the USERVAR table. Processing continues.

Operator Response: Determine which USERVAR should be defined for the application program.

- If the currently defined USERVAR is incorrect, you must delete the currently defined USERVAR with a MODIFY USERVAR,OPTION=DELETE command. After deleting the incorrect USERVAR, issue a MODIFY USERVAR command to define the correct USERVAR for the application program.

  If *applname*'s ACB was open while the incorrect USERVAR was defined, then the incorrect information was copied to the application program's control blocks. In this situation, VTAM issues message IST1034I when the MODIFY USERVAR command is entered for the correct USERVAR.
- If the currently defined USERVAR is correct, no action is required.

Programmer Response: If the MODIFY USERVAR command was issued through the program operator interface, determine which USERVAR should be defined for the application program and correct the mechanism that established the incorrect USERVAR definition.

IST1034I *applname* **ALREADY USING** *uservar* **FOR APPC SESSIONS**

Explanation: VTAM issues this message in response to a MODIFY USERVAR command when APPC=YES is specified and *applname* is already using *uservar*. Another USERVAR cannot be defined with APPC=YES for this application program.

applname is the name of the application program specified in the MODIFY USERVAR command.

uservar is the name of the USERVAR the application program is already using.

System Action: VTAM rejects the command and no changes are made to the USERVAR table. Processing continues.

Operator Response: Determine which USERVAR the application program should be using.

- If the application program is currently using an incorrect USERVAR, then the application program will need to terminate (CLOSE ACB) its connection to VTAM, which will remove all knowledge of the incorrect USERVAR. Once the application program's connection to VTAM has terminated, then the MODIFY USERVAR command can be issued to define the correct USERVAR and the application program can re-establish (OPEN ACB) its connection to VTAM.
- If the application program is currently using the correct USERVAR and is :
  - The active supplier of the services represented by the USERVAR, redefine the USERVAR with the MODIFY USERVAR,APPC=YES command.
  - Not the active supplier of the services represented by the USERVAR, no action is required.

Programmer Response: If the MODIFY USERVAR command was issued through the program operator interface, determine which USERVAR should be defined for the application program and correct the mechanism that established the incorrect USERVAR definition.

IST1035I **ERROR WHILE {ADDING|DELETING} NETWORK** *netid* **{TO|FROM} GWN** *gatewaynode*

Explanation: This message is the first in a group of messages that VTAM issues when the COS table name (defined by the COSTAB operand) or the maximum subarea value (defined by the MAXSUBA operand) on the BUILD or NETWORK definition statement could not be defined to VTAM. A complete description of the message group follows.

```
IST1035I ERROR WHILE {ADDING|DELETING} NETWORK netid {TO|FROM} GWN gatewaynode
IST523I REASON = reason
```

IST1035I

- *netid* is the dynamic network to which a connection was attempted. When *gatewaynode* is activated, this statement is processed. For gateway nodes, this is a model network statement.
- *gatewaynode* is the gateway node for which network *netid* could not be added or deleted.

IST523I

- *reason* indicates the reason for the failure, and is one of the following:

COSTAB NOT FOUND
The COS table name associated with a model network could not be found when VTAM attempted to add network *netid*.

COSTAB USE COUNT OVERFLOW
VTAM has exceeded its ability to record *gatewaynode*'s sharing of the COS table coded on the COSTAB operand.

DUPLICATE COSTAB
The COS table for *netid* and for *gatewaynode* has already been defined on a BUILD or NETWORK definition statement for *gatewaynode*.

DUPLICATE MAXSUBA
The maximum subarea value (MAXSUBA) has already been defined on a BUILD or NETWORK definition statement for *gatewaynode* or another gateway node.

DUPLICATE SUBAREA
The subarea value has already been defined on a BUILD or NETWORK definition statement for another gateway node.

INSUFFICIENT STORAGE
Network *netid* cannot be added or deleted because of insufficient storage.

INSUFFICIENT STORAGE TO DEFINE COSTAB
The COS table name (COSTAB) cannot be defined because of insufficient storage.

INSUFFICIENT STORAGE TO DEFINE MAXSUBA
The maximum subarea value (MAXSUBA) cannot be defined because of insufficient storage.

INSUFFICIENT STORAGE TO DEFINE SUBAREA
The subarea cannot be defined because of insufficient storage.

MAXSUBA USE COUNT OVERFLOW
VTAM has exceeded its ability to record *gatewaynode*'s sharing of the maximum subarea value coded on the MAXSUBA operand.

MODEL NETWORK NOT FOUND
The model network coded on the NETWORK definition statement with COPIES= was not defined for *gatewaynode*.

UNEXPECTED RETURN CODE
An unexpected return code was found while adding or deleting network *netid*.

UNEXPECTED RETURN CODE DEFINING COSTAB
An unexpected return code was found while defining the COS table.

UNEXPECTED RETURN CODE DEFINING MAXSUBA
An unexpected return code was found while defining the maximum subarea value.

UNEXPECTED RETURN CODE DEFINING SUBAREA
An unexpected return code was found while defining the subarea value.

UNEXPECTED RETURN CODE DELETING COSTAB
An unexpected return code was found while deleting the COS table.

UNEXPECTED RETURN CODE DELETING MAXSUBA
An unexpected return code was found while deleting the maximum subarea value.

IST1035I

UNEXPECTED RETURN CODE DELETING SUBAREA
An unexpected return code was found while deleting the subarea value.

System Action: If this message was issued because network *netid* could not be added, all cross-network sessions destined to network *netid* will fail except for SSCP-SSCP sessions and for LU-LU sessions that use the default blank COS entry.

The system action depends on the value of *reason*:

COSTAB NOT FOUND
Network *netid* is ignored for *gatewaynode*.

COSTAB USE COUNT OVERFLOW
The COS table name is ignored. Even though the class-of-service table is defined for other active NCPs, it still cannot be used for this NCP definition, since its usage cannot be recorded to VTAM.

DUPLICATE COSTAB
The COS table name is ignored. The original COS table name for the NETID defined in this NCP definition is used.

DUPLICATE MAXSUBA
The maximum subarea value is ignored. A different value has already been defined successfully to this host, and cannot be changed or redefined for the network identified by the coded NETID until all networks that depend on this maximum subarea value are deactivated.

DUPLICATE SUBAREA
The subarea name is ignored. The original subarea name for the NETID defined in this NCP definition is used.

INSUFFICIENT STORAGE
Network *netid* cannot be added or deleted because of insufficient storage. Processing continues.

INSUFFICIENT STORAGE TO DEFINE COSTAB
The COS table name is ignored.

INSUFFICIENT STORAGE TO DEFINE MAXSUBA
The maximum subarea value is ignored. If this host resides in the gateway NCP's native network, and will own links or link stations in the network identified by the NETID operand, it will be impossible to activate those links or link stations without knowledge of that network's maximum subarea value. However, if the definition of another NCP has successfully defined the maximum subarea for the network, such link and link station activations will be possible, as long as that other NCP is not deactivated.

INSUFFICIENT STORAGE TO DEFINE SUBAREA
The subarea name is ignored.

MAXSUBA USE COUNT OVERFLOW
The maximum subarea value is ignored.

MODEL NETWORK NOT FOUND
The definition of network *netid* fails.

UNEXPECTED RETURN CODE
The definition of network *netid* fails.

UNEXPECTED RETURN CODE DEFINING COSTAB
The COS table name is not defined.

UNEXPECTED RETURN CODE DEFINING MAXSUBA
The maximum subarea value is not defined.

UNEXPECTED RETURN CODE DEFINING SUBAREA
The subarea value is not defined.

UNEXPECTED RETURN CODE DELETING COSTAB
The COS table name is not deleted.

UNEXPECTED RETURN CODE DELETING MAXSUBA
The maximum subarea value is not deleted.

UNEXPECTED RETURN CODE DELETING SUBAREA
The subarea value is not deleted.

Operator Response:

- If *text* is **COSTAB NOT FOUND**, **DUPLICATE COSTAB**, or **COSTAB USE COUNT OVERFLOW**, enter a DISPLAY COS,ORIGIN=*gatewaynode*,NETID=* command, and save the system log for problem determination.
- If *text* is **INSUFFICIENT STORAGE...**, deactivate all links to network *netid*, then reactivate those links later when more storage is available. Enter a DISPLAY BFRUSE command. Enter the DISPLAY STORUSE command to display storage usage for storage pools. Save the system log and request a dump for problem determination.
- For all other *reason*s, save the system log for problem determination.

Programmer Response:

COSTAB NOT FOUND
Review the output from the DISPLAY COS command and contact the IBM software support center.

COSTAB USE COUNT OVERFLOW
Review the output from the DISPLAY COS command. Restrict the usage of the COSTAB name for each network and NCP to less than 256. If many NCPs need to be active simultaneously, use different COSTAB names, each defining COSTABs for many other networks. Use the MODIFY TABLE command to correct problems.

DUPLICATE COSTAB
Identify the COSTAB name coded for the same NETID by reviewing all the BUILD and NETWORK definition statements preceding the definition statement specified for the indicated network, *netid*. Code only a single COSTAB name for any one network within this NCP definition. Use the MODIFY TABLE command to correct problems.

DUPLICATE MAXSUBA
Check to see if the maximum subarea value specified on the MAXSUBA keyword for the BUILD or NETWORK definition statement for the indicated NETID start option, *netid* is valid. This value must also be identical to the maximum subarea values on all other BUILD or NETWORK definition statements in this or another NCP definition that have ever been activated.

DUPLICATE SUBAREA
Check all the BUILD and NETWORK definition statements preceding the definition statement specified for the indicated network to identify the subarea value coded for the same NETID. Code only a single subarea value for any one network within this NCP definition. Be sure to check all definition statements that are active.

INSUFFICIENT STORAGE...
It may be necessary to cancel nonessential jobs or deactivate an unused part of the network to prevent further losses. You might have to halt and restart VTAM if there are too many failures.

You might want to redefine your buffer pool or CSA limits. If the start option cannot be modified using the MODIFY VTAMOPTS command, you must modify the VTAM start options file (ATCSTRxx) and restart VTAM to use the start option.

- See the *z/OS Communications Server: SNA Operation* for information about the DISPLAY BFRUSE Command, the DISPLAY STORUSE Command, and the MODIFY VTAMOPTS Command.
- See the *z/OS Communications Server: SNA Diagnosis Vol 2, FFST Dumps and the VIT* for information about analyzing dumps and about analyzing storage using the VIT analysis tool, if external trace is active.

MAXSUBA USE COUNT OVERFLOW
Contact the IBM software support center.

MODEL NETWORK NOT FOUND
This error can be caused in one of two ways:

1. The NCP was generated with a definition statement that included a model network, but the model network was removed before the definition was activated by VTAM. If this is the case, restore the model network and activate the corrected definition statement.
2. There is an error in the NCP that is causing it to generate requests for no reason. Contact the IBM software support center.

UNEXPECTED RETURN CODE
Contact the IBM software support center.

UNEXPECTED RETURN CODE DEFINING COSTAB
Contact the IBM software support center.

UNEXPECTED RETURN CODE DEFINING MAXSUBA
Contact the IBM software support center.

UNEXPECTED RETURN CODE DEFINING SUBAREA
Contact the IBM software support center.

UNEXPECTED RETURN CODE DELETING COSTAB
Contact the IBM software support center.

UNEXPECTED RETURN CODE DELETING MAXSUBA
Contact the IBM software support center.

UNEXPECTED RETURN CODE DELETING SUBAREA
Contact the IBM software support center.

IST1036I NODE ABEND–UNUSABLE RESOURCE IS *resource*

Explanation: VTAM issues this message when a resource defined in an external communication adapter (XCA) major node cannot recover from an abend.

resource contains the type and name of the abended resource. Possible values of *resource* are as follows:

LINE *linename*
Line *linename* within an XCA major node is unusable. All other lines within this major node are unaffected.

SAP *sapnum* **IN NODE** *nodename*
Service access point (SAP) *sapnum* within XCA major node *nodename* is unusable.

If *sapnum* is an SNA SAP, all lines associated with this SAP are unusable. Any VCNS line within this major node is unaffected.

If *sapnum* is a VCNS SAP, the specified SAP is unusable. All other SAPs associated with the VCNS line are unaffected. All SNA lines are unaffected.

NODE *nodename*
XCA major node *nodename* is unusable. All SNA and VCNS lines within this major node are unusable. Other VTAM major nodes are unaffected.

System Action: The resource identified in the message and all resources using it are marked unusable. Processing continues unchanged for all other resources.

Operator Response: Save the system log and dump for problem determination.

Programmer Response: Use the system log and dump to assist you in determining the reason for the abend. To use the failed resource, you must halt and restart VTAM. If you need additional assistance, contact the IBM software support center.

IST1037I NODE ABEND-INOP REPORTED FOR *resource*

Explanation: VTAM issues this message when a resource defined in an XCA major node abends and recovers by processing an inoperative condition. The line or lines within the scope of the failing resource will eventually become inoperative.

resource contains the type and name of the abended resource. Possible values of *resource* are as follows:

LINE *linename*
Line *linename* within an XCA major node is processed as inoperative. All other lines within this major node are unaffected.

SAP *sapnum* **IN NODE** *nodename*
Service access point (SAP) *sapnum* within XCA major node *nodename* is processed as inoperative.

If *sapnum* is an SNA SAP, all lines associated with this SAP are processed as inoperative. Any VCNS line within this major node is unaffected.

If *sapnum* is a VCNS SAP, the specified SAP is processed as inoperative. All other SAPs associated with the VCNS line are processed as inoperative. All SNA lines are unaffected.

NODE *nodename*
XCA major node *nodename* is processed as inoperative. All SNA and VCNS lines within this major node are processed as inoperative. Other VTAM major nodes are unaffected.

System Action: The resource identified in the message and all resources using the identified resource are processed as inoperative.

Operator Response: When inoperative processing is complete, VTAM issues message IST259I. Restart the inoperative resources. If only a few resources are inoperative, you can restart them individually; otherwise, restart the XCA major node. Save the system log and dump for problem determination.

Programmer Response: Use the system log and dump to assist you in determining the reason for the abend. If you need additional assistance, contact the IBM software support center. See the *z/OS Communications Server: SNA Diagnosis Vol 2, FFST Dumps and the VIT* for information on the abend procedure and dumps.

IST1038I MODIFY NOTRACE REJECTED-VIT IS NOT WAITING TO TERMINATE

Explanation: VTAM issues this message in response to a MODIFY NOTRACE,TYPE=VTAM,OPTION=FORCE command when the VTAM internal trace (VIT) is not waiting to terminate. OPTION=FORCE is only valid when you previously tried (unsuccessfully) to stop the VIT using OPTION=END.

System Action: The MODIFY NOTRACE command is rejected. Processing continues.

Operator Response: Enter a MODIFY NOTRACE,TYPE=VTAM,OPTION=END command to stop the VTAM internal trace. This should terminate the VIT. If it does not, reenter the MODIFY NOTRACE,TYPE=VTAM,OPTION=FORCE command.

See the *z/OS Communications Server: SNA Diagnosis Vol 2, FFST Dumps and the VIT* for information about analyzing dumps and about analyzing storage using the VIT analysis tool, if external trace is active.

Programmer Response: None.

IST1039I SSCP TKOVR FOR ID = *nodename* **FAILED-INACT GVBK SCHEDULED**

Explanation: VTAM issues this message when a takeover for *nodename* failed and was overridden by a VARY INACT,TYPE=GIVEBACK command. If an error occurred during takeover processing, this message informs the operator that an internal VARY INACT,TYPE=GIVEBACK command was entered.

System Action: Nondisruptive deactivation of *nodename* and attached nodes continues.

Operator Response: Save the system log for problem determination.

Programmer Response: Check the system log to determine the cause of the problem.

IST1040I CONVERSATION(S) FOUND FOR *applname*

Explanation: This message is part of a group of messages that VTAM issues in response to a DISPLAY CONVID command. A complete description of the message group follows.

```
IST1040I CONVERSATION(S) FOUND FOR applname
IST1007I PARTNER = partner, LOGMODE = logmode
IST1008I CONVID = convid, STATUS = status, ETIME = etime
IST1009I SID = sid, HPDT = hpdtvalue
IST924I  ------------------------------------------------------------
IST1007I PARTNER = partner, LOGMODE = logmode
IST1008I CONVID = convid, STATUS = status, ETIME = etime
IST1009I SID = sid, HPDT = hpdtvalue
IST924I  ------------------------------------------------------------
:
IST314I END
```

Message IST1040I provides the name of the LU 6.2 application program, *applname*, specified on the operator command. Messages IST1007I, IST1008I, and IST1009I provide information concerning an individual conversation with the LU 6.2 application program. Message IST924I is used as a line separator to separate the different individual conversations found for the LU 6.2 application program.

applname is the name of the LU 6.2 application program specified in the operator command.

IST1040I

partner is the name of the partner LU for which DISPLAY information was requested.

logmode is the logon mode name for which DISPLAY information was requested.

convid is the conversation identifier for the specified application program and its partner LU.

status is the status of the conversation. Possible values are given in the following list. If *status* ends with **/D**, deallocation is pending for the conversation. The **/D** modifier applies to persistent sessions only.

Status
Meaning

E_CONV
Half-duplex end conversation: the conversation is being deallocated.

F_SR
Full-duplex send/receive: the application program is capable of sending data to and receiving data from the partner LU.

F_SO
Full-duplex send only: the application program has received a deallocation request from the partner LU. The application program can send data to the partner LU and is expected to send a deallocation request to end the conversation.

F_RO
Full-duplex receive only: The application program has sent a deallocation request to the partner LU. The application program can receive data from the partner LU and is expecting to receive a deallocation request to end the conversation.

FP_SR_L
Full-duplex pending send/receive log: the application program has received an error notification accompanied by error log data. After the application receives the data, the conversation will return to a SEND/RECEIVE state.

FP_RO_L
Full-duplex pending receive only log: the application program has received an error notification accompanied by error log data. After the application receives the data, the conversation will return to a RECEIVE_ONLY state.

FP_RS_L
Full-duplex pending reset log: the end of the conversation is pending receipt of error log data. After the application program receives the error log data, the conversation will enter a RESET state.

F_R_FM5
Full-duplex receive FMH-5: the conversation is in a SEND/RECEIVE state; but there is an FMH-5 waiting to be received. After the application program receives the FMH-5, the conversation will become usable.

P_ALOC
Pending allocation state: the application has reserved a session and conversation, but an FMH-5 has not been processed on the conversation.

P_DEAL
Half-duplex pending deallocation: the application program is waiting for the partner LU to confirm the receipt of data.

P_E_LOG
Half-duplex pending end conversation log: the end of the conversation is pending the receipt of error log data.

P_R_LOG
Half-duplex pending receive log: the application program can receive error log data that does not precede the end of the conversation.

P_SEND
Half-duplex pending send: the application program has received data and the change direction command. The conversation will be placed in SEND state following the acceptance of data and a subsequent SEND operation.

R_CFM
Half-duplex receive confirmation: the application program is expected to reply to a confirmation request.

R_CFM_D
Half-duplex receive confirmation deallocate: the application program is expected to reply to a confirmation request that will also change the state to deallocate.

R_CFM_S
Half-duplex receive confirmation send: the application program is expected to reply to a confirmation request and has also received a change direction command, implying that the application program will be placed in a SEND state after the confirmation.

R_FMH5
Half-duplex receive FMH-5: the conversation is in a RECEIVE state, but there is an FMH-5 waiting to be received. After the application program receives the FMH-5, the conversation will become usable.

RECEIVE
Half-duplex receive: The application program is expecting information from the partner LU.

RESET
Full-duplex or half-duplex reset: The conversation has been deallocated.

SEND
Half-duplex send: The application program is capable of sending data to or requesting confirmation from the partner LU.

etime is the elapsed time, in minutes, since the last API operation was performed on the conversation. If the value of *etime* is greater than 99999, VTAM displays **99999**.

sid is the session identifier for the conversation.

hpdtvalue will be either YES or NO indicating whether high performance data transfer (HPDT) services were available on the session, used by the conversation, at the time the session was established.

System Action: Processing continues.

Operator Response: None.

Programmer Response: None.

IST1041I *nodename nodetype*

Explanation: This message is part of a group of messages that VTAM issues in response to the following commands:
- DISPLAY TRACES,TYPE=NODES,ID=(*nodename1*, *nodename2*,...,*nodenamen*)
- DISPLAY TRACES,TYPE=NODES,ID=*
- DISPLAY TRACES,TYPE=ALL

A complete description of the message group follows.

```
 IST350I   DISPLAY TYPE = type
 IST075I   NAME = nodename, TYPE = nodetype
 IST1041I  nodename nodetype
[IST752I  GPT TRACE STATUS = status [ALSNAME = alsname]]
:
:
[IST1042I tracetype = status [– AMOUNT = value] [– SAVED = {YES|NO}]]
[IST924I  -------------------------------------------------------]
 IST1422I  SAVED TRACE REQUESTS FOR value
 IST1041I  nodename nodetype
[IST1042I tracetype = status [– AMOUNT = value] [– SAVED = {YES|NO}]]
:
 IST314I  END
```

If ID identifies multiple resources to be displayed or ID=*, the IST1041I subgroup is repeated for each resource that has active traces. Line separator message IST924I is issued to separate information for each major node.

IST075I

nodename is the name of the major or minor node that is associated with the trace data displayed in this message subgroup. If ID=* was entered on the DISPLAY TRACES command, *nodename* is a major node containing subordinate nodes with active traces.

nodetype is the resource type of the major or minor node. See Chapter 15, “Node and ID types in VTAM messages” on page 697 for a description of *nodetype*.

– If *nodetype* is **CP**, **RESOURCE**, or **SSCP**, *nodename* is a resource that may not yet be defined to VTAM. In this case, *nodetype* is the IDTYPE specified on the MODIFY TRACE command, and *status* in IST1042I is always **SAVED**.

IST350I

This message identifies the type of information shown in the display. Possible values of *type* include:

TRACES,TYPE=NODES
The display contains the status of the BUF, GPT, IO, LINE, SIT, and TG trace for a particular resource and its subordinate nodes.

TRACES,TYPE=SMS
The display contains the status of the SMS buffer trace.

TRACES,TYPE=VTAM
The display contains the status of the VTAM internal trace.

IST752I

This message is displayed when the generalized PIU trace (GPT) is displayed for an independent LU. VTAM issues this message once for each adjacent link station (ALS) that the independent LU is using. VTAM issues this message only for adjacent link stations that exist in an NCP major node (or, for a switched connection, link stations that are connected through a link in an NCP major node).

status is the trace status code. See the *z/OS Communications Server: IP and SNA Codes* for more information on resource status codes.

alsname is the name of the adjacent link station that the independent LU is using.

IST1041I

nodename can be one of the following:

– The major or minor node displayed in message IST075I.

– The name of a resource subordinate to the major or minor node displayed in message IST075I, if there is an active trace for that resource.

nodetype is the resource type of *nodename*. See Chapter 15, “Node and ID types in VTAM messages” on page 697 for a description of *nodetype*.

IST1042I

This message is always issued in this group except in the case when the GPT trace status is displayed for an independent LU. Then message IST752I is displayed.

tracetype is the name of an active trace and can be one of the following:

BUF
Buffer contents trace

GPT
Generalized PIU trace (GPT)

IO Input/output trace

LINE
Line trace

SIT
Scanner interface trace (SIT)

STATE
Resource state trace

TG Transmission group (TG) trace

status is the status of the displayed trace and can be one of the following:

ON
tracetype is **BUF**, **IO**, or **STATE**, and the trace is active for this resource.

SAVED
tracetype is **BUF** or **IO**, and the trace command is saved for this resource. This status is displayed when SAVE=YES was specified on the MODIFY TRACE command, and the resource has not yet been defined to VTAM.

TRACT
tracetype is **GPT**, **LINE**, **SIT**, or **TG**, and the trace is active for this resource.

TRPAR
tracetype is **GPT**, **LINE**, **SIT**, or **TG**, and the trace is in the process of being activated.

For additional *status* information, see the *z/OS Communications Server: IP and SNA Codes*.

TRPDR
tracetype is **GPT**, **LINE**, **SIT**, or **TG**, and the trace is in the process of being deactivated.

For additional *status* information, see the *z/OS Communications Server: IP and SNA Codes*.

AMOUNT = *value* is displayed only if the buffer contents trace is active (*tracetype* is **BUF**) and indicates how much of the buffer's contents are traceable.

value represents the **AMOUNT** operand value specified on the TRACE start option or the MODIFY TRACE command, and can be one of the following:

PARTIAL
The trace record has a maximum size of 256 bytes including header information.

FULL All of the buffer's contents are traceable.

Note: If **AMOUNT** is not specified when the buffer contents trace is activated, the default *value* **PARTIAL** is displayed.

See the *z/OS Communications Server: SNA Diagnosis Vol 1, Techniques and Procedures*.

SAVE = {YES|NO} indicates the value that was specified on the SAVE operand of the MODIFY TRACE command and is displayed only if the buffer contents, I/O, or resource state trace is active.

IST1422I

This message is displayed if there are traces saved for resources that are not active. Messages IST1041I and IST1042I are displayed following this message for each resource.

value is the value specified on the ID operand of the DISPLAY TRACES command. If **TYPE=ALL** was specified on the command, *value* is ***.***.

System Action: Processing continues.

Operator Response: None.

Programmer Response: None.

IST1042I *tracetype* **=** *status* **[– AMOUNT =** *value***] [– SAVED = {YES|NO}]**

Explanation: VTAM issues this message as part of a message group. See the explanation of message IST1041I for a complete description of the group.

IST1043I **CP NAME =** *cpname***, CP NETID =** *netid***, DYNAMIC LU = {YES|NO}**

Explanation: VTAM issues this message as part of a group of messages in response to a DISPLAY ID command for a PU type 2.1.

cpname is the name of the CP associated with the PU.

The meaning of *netid* is determined by the XNETALS start option and the NETID value specified on the PU definition statement. See the *z/OS Communications Server: SNA Resource Definition Reference* for information about the XNETALS start option.

If *cpname* or *netid* is not known, VTAM issues ***NA***.

DYNAMIC LU indicates whether the PU supports dynamic independent LUs. This corresponds to the value of the DYNLU operand on the PU definition statement.

System Action: Processing continues.

Operator Response: None.

Programmer Response: None.

IST1044I **ALSLIST =** *alsname alsname alsname alsname*

Explanation: VTAM issues this message as part of a group of messages in response to a DISPLAY ID command for an independent LU.

The *alsname*s are the names of all adjacent link stations defined for the independent LU specified in the DISPLAY ID command. VTAM issues this message until all adjacent link station names are displayed.

System Action: Processing continues.

Operator Response: None.

Programmer Response: None.

IST1045I **NODE TYPE =** *nodetype*

Explanation: VTAM issues this message as part of several different message groups. See the explanation of the first message in the group for a complete description.

See Chapter 15, “Node and ID types in VTAM messages” on page 697 for a description of *nodetype*.

IST1046I *nodetype nodename* **ALSO EXISTS**

Explanation: This message is part of a group of messages that VTAM issues in response to a DISPLAY ID=*name* command or a DISPLAY VTAMSTOR,RESOURCE command and indicates that more than one resource has the same name.

nodetype is one of the following:

CP Control point *nodename* exists, in addition to the SSCP (or CDRM) displayed in IST075I.

SHADOW
A shadow for *nodename* exists, in addition to the resource displayed in message IST075I.

SSCP
SSCP (or CDRM) *nodename* exists, in addition to the CP displayed in message IST075I.

nodename is the network-qualified name of the resource in the form *netid.name*.

System Action: Processing continues.

Operator Response: None.

Programmer Response: None.

IST1048I **COMPRESSION LEVEL – INPUT =** *input_level*, **OUTPUT =** *output_level*

Explanation: VTAM issues this message as part of a group of messages. The first message in this group is IST879I. See the explanation of that message for a complete description.

IST1049I **PERCENT REDUCTION – INPUT =** *input_percent*, **OUTPUT =** *output_percent*

Explanation: VTAM issues this message as part of a group of messages. The first message in this group is IST879I. See the explanation of that message for a complete description.

IST1050I MAXIMUM COMPRESSION LEVEL – INPUT = *input_level*, **OUTPUT =** *output_level*

Explanation: VTAM issues this message in response to a DISPLAY ID command entered for an application. The message displays the maximum compression level for the application when the application is the primary logical unit (PLU).

input_level is the maximum compression level for input session traffic that is specified on the CMPAPPLI operand on the APPL definition statement.

output_level is the maximum compression level for output session traffic that is specified on the CMPAPPLO operand on the APPL definition statement.

See the *z/OS Communications Server: SNA Resource Definition Reference* for more information on the APPL definition statement. See the *z/OS Communications Server: SNA Network Implementation Guide* for more information on compression limits and compression levels.

System Action: Processing continues.

Operator Response: To change the maximum compression levels, use the MODIFY COMPRESS command. Otherwise, no action is necessary. See the *z/OS Communications Server: SNA Operation* for more information.

Programmer Response: None.

IST1051I EVENT CODE = *code*

Explanation: VTAM issues this message as part of a message group. The first message in the group is either IST530I or IST1436I. See the first message in the group for a complete description.

See the *z/OS Communications Server: IP and SNA Codes* for a description of *code*.

IST1052I SYNTAX ERROR AFTER *option***–ALL FURTHER OPTIONS IGNORED**

Explanation: VTAM issues this message when the start option after *option* contains a syntax error.

System Action: VTAM ignores any start options after *option*. VTAM will issue message IST1311A to prompt you for the correct start options.

Operator Response: Enter all start options after the last valid start option in response to IST1311A. You can also enter a blank if you want to accept the default values for all further start options.

Programmer Response: If *option* is coded in an ATCSTR*xx* file, correct the syntax of the options following *option* in that file. For more information about VTAM start options, see the *z/OS Communications Server: SNA Resource Definition Reference*.

IST1053I VALUE FOR *option* **MUST BE 'YES' OR 'NO'**

Explanation: VTAM issues this message during START processing or in response to a MODIFY VTAMOPTS command when *option* contains a value other than **YES** or **NO**.

System Action: VTAM ignores *option*.

- If the error occurred during START processing, VTAM will issue message IST1311A to prompt you for the correct value of *option*.
- If the error occurred in response to a MODIFY VTAMOPTS command, processing continues.

Operator Response:

- If the error occurred during START processing, enter a value of **YES** or **NO** for *option* in response to IST1311A. You can also enter a blank if you want to accept the default value for *option*.
- If the error occurred in response to a MODIFY VTAMOPTS command, ensure that you entered *option* correctly.

Programmer Response:

- If the error occurred during START processing, correct the value for *option* if *option* is coded in an ATCSTR*xx* file.
- If the error occurred in response to a MODIFY VTAMOPTS command, no further action is required.

For more information about VTAM start options, see the *z/OS Communications Server: SNA Resource Definition Reference*.

IST1054I VALUE FOR *option* **MUST BE BETWEEN** *min* **AND** *max*

Explanation: VTAM issues this message during START processing or in response to a MODIFY VTAMOPTS command when the value of *option* is out of range. The value of *option* must be between *min* and *max*.

System Action: VTAM ignores *option*.

- If the error occurred during START processing, VTAM will issue message IST1311A to prompt you for the correct value of *option*.
- If the error occurred in response to a MODIFY VTAMOPTS command, processing continues.

Operator Response:

- If the error occurred during START processing, enter a value for *option* between *min* and *max* in response to IST1311A. You can also enter a blank if you want to accept the default value for *option*.
- If the error occurred in response to a MODIFY VTAMOPTS command, ensure that you entered *option* correctly.

Programmer Response:

- If the error occurred during START processing, correct the value for *option* if *option* is coded in an ATCSTR*xx* file.
- If the error occurred in response to a MODIFY VTAMOPTS command, no further action is required.

For more information about VTAM start options, see the *z/OS Communications Server: SNA Resource Definition Reference*.

IST1055I VALUE FOR *option* **MUST BE** *type*

Explanation: VTAM issues this message during START processing or in response to a MODIFY VTAMOPTS command when the value of *option* is not the correct *type*. Possible values for *type* are:

NUMERIC
The value for *option* must be a numeric value.

TIMER The value for *option* must be in the form **xxI**, where **xx** is a numeric value and **I** is a character designation of a time interval (**S** = seconds, **M** = minutes, **H** = hours, **D** = days). Individual start options that use **TIMER** notation have different valid ranges. Refer to the *z/OS Communications Server: SNA Resource Definition Reference* for more information.

System Action: VTAM ignores *option*.

- If the error occurred during START processing, VTAM will issue message IST1311A to prompt you for the correct value of *option*.
- If the error occurred in response to a MODIFY VTAMOPTS command, processing continues.

Operator Response:

- If the error occurred during START processing, enter a valid value for *option* in response to IST1311A. You can also enter a blank if you want to accept the default value for *option*.
- If the error occurred in response to a MODIFY VTAMOPTS command, ensure that you entered *option* correctly.

Programmer Response:

- If the error occurred during START processing, correct the value for *option* if *option* is coded in an ATCSTR*xx* file.
- If the error occurred in response to a MODIFY VTAMOPTS command, no further action is required.

For more information about VTAM start options, see the *z/OS Communications Server: SNA Resource Definition Reference*.

IST1056I *option* **PARAMETER** *n* **MUST BE BETWEEN** *min* **AND** *max*

Explanation: VTAM issues this message during START processing or in response to a MODIFY VTAMOPTS command when the *n*th parameter specified for *option* is out of range. The value of this parameter must be between *min* and *max*.

System Action: VTAM ignores *option*.

- If the error occurred during START processing, VTAM will issue message IST1311A to prompt you for the correct value of *option*.
- If the error occurred in response to a MODIFY VTAMOPTS command, processing continues.

Operator Response:

- If the error occurred during START processing, enter a value between *min* and *max* for parameter *n* in response to IST1311A. You can also enter a blank if you want to accept the default value for *option*.
- If the error occurred in response to a MODIFY VTAMOPTS command, ensure that you entered *option* correctly.

Programmer Response:

- If the error occurred during START processing, correct the value for *option* if *option* is coded in an ATCSTR*xx* file.
- If the error occurred in response to a MODIFY VTAMOPTS command, no further action is required.

For more information about VTAM start options, see the *z/OS Communications Server: SNA Resource Definition Reference*.

IST1057I *resourcename* **IS ALSO A REAL RESOURCE**

Explanation: VTAM issues this message in response to the following commands:

- DISPLAY SESSIONS

  VTAM displays information about sessions for the active network resource *resourcename*. This message follows IST113I or IST1156I and indicates that a USERVAR and an active network resource have the same name.

  resourcename is the network-qualified name of the resource in the form *netid.name*.
- DISPLAY ID=*displayname*,IDTYPE=LUALIAS or IDTYPE=USERVAR

  This message is part of a group of messages headed by IST075I. The name specified on the command identifies both an LUALIAS or USERVAR name **and** a network resource.
  - If IDTYPE=USERVAR was specified, *resourcename* is the name of the resource. If a network-qualified name was entered on the command for *displayname*, *resourcename* is issued as a network-qualified name in the form *netid.name*.
  - If IDTYPE=LUALIAS was specified, *resourcename* is not network-qualified.
- DISPLAY VTAMSTOR,RESOURCE command

System Action: Processing continues.

Operator Response:

- DISPLAY SESSIONS

  For session information about the value of the USERVAR, enter a DISPLAY SESSIONS command for the USERVAR value in message IST113I or IST1156I. You can enter a DISPLAY USERVAR command to list the current active USERVARS defined in this network.

  For information about additional sessions with the active network resource *resourcename*, rename your USERVAR.
- DISPLAY ID=*displayname*,IDTYPE=LUALIAS or IDTYPE=USERVAR

  You can display information about the network resource by entering the DISPLAY ID=*displayname*,IDTYPE=RESOURCE command, where *displayname* is the name of the resource.

Programmer Response: None.

IST1058I **MODEL LU GROUP =** *lugroup***, LUSEED =** *pattern*

Explanation: VTAM issues this message as part of a group of messages in response to a DISPLAY ID command entered for a PU that supports dynamic LU definitions.

lugroup is the model LU group used to define dynamic LUs for this PU. The value of *lugroup* corresponds to the LUGROUP keyword on the PU definition statement.

pattern is the character pattern passed to the selection of definitions for dependent LUs (SDDLU) exit. This pattern can be used to generate names for dynamically defined LUs. The value of *pattern* corresponds to the LUSEED keyword on the PU definition statement. See the *z/OS Communications Server: SNA Resource Definition Reference* for more information.

System Action: Processing continues.

Operator Response: None.

Programmer Response: None.

IST1059I MODEL NAME = *modelname*

Explanation: VTAM issues this message as part of a group of messages in response to a DISPLAY ID command for a dynamically defined resource. *modelname* is the name of the model that was used to build the resource.

System Action: Processing continues.

Operator Response: None.

Programmer Response: None.

IST1060I LUGROUP MAJOR NODE = *lugroupnode*

Explanation: VTAM issues this message as part of a group of messages in response to a DISPLAY LUGROUPS command. *lugroupnode* is the name of the LUGROUP major node being displayed.

System Action: Processing continues.

Operator Response: None.

Programmer Response: None.

IST1061I FAILURE OCCURRED ON *puname* **AT** *locaddr*

Explanation: VTAM issues this message as part of a group of messages. The first message in this group is IST1016I. See the explanation of that message for a complete description.

IST1062I EVENT ID = *eventid*

Explanation: VTAM issues this message as part of a message group. The first message in the group is either IST530I or IST1436I. See the first message in the group for a complete description.

See the *z/OS Communications Server: IP and SNA Codes* for a description of *eventid*.

IST1063I MODELS AFTER THE 255TH MODEL IN LUGROUP *lugroup* **IGNORED**

Explanation: VTAM issues this message during the activation of LUGROUP *lugroup* when *lugroup* contains more than 255 model LU definitions. An LUGROUP cannot have more than 255 models.

System Action: Only the first 255 models in *lugroup* are defined; all models after the 255th model are ignored. Processing continues.

Operator Response: Save the system log for problem determination.

Programmer Response: Correct the definition of *lugroup*. An LUGROUP major node cannot contain more than 255 model LUs. See the *z/OS Communications Server: SNA Resource Definition Reference* for more information.

IST1064I TRACE IGNORED, *nodename* **– STORAGE SHORTAGE**

Explanation: This message is the first in a group of messages that VTAM issues when sufficient storage is not available to start the requested trace. A complete description of the message group follows.

```
IST1064I  TRACE IGNORED, nodename – STORAGE SHORTAGE
IST1045I  NODE TYPE = nodetype
IST314I   END
```

If a network-qualified name was entered on the start option or the MODIFY TRACE command, VTAM issues *nodename* in the form *netid.name*.

nodetype is the resource type of *nodename*. See Chapter 15, “Node and ID types in VTAM messages” on page 697 for possible values.

System Action:

- If *nodename* is **VTAM** and you are trying to start an internal trace (for example, type=VTAM), initialization continues without a VTAM internal trace table.

- If *nodename* is anything other than **VTAM**, VTAM issues message IST1311A which prompts you to reenter any start option overrides.

Operator Response: Wait a short time and reenter the command. If VTAM continues to issue this message, enter the DISPLAY BFRUSE command. Enter the DISPLAY STORUSE command to display storage usage for storage pools. Save the system log and dump for problem determination.

For a VTAM internal trace, enter a MODIFY TRACE command, specifying a smaller buffer size.

Programmer Response: Verify that the operator entered the buffer pool or CSA start options as specified in the start procedures.

Increase storage as required. For insufficient storage errors, you might want to redefine your buffer pool or CSA limits. If the start option cannot be modified using the MODIFY VTAMOPTS command, you must modify the VTAM start options file (ATCSTRxx) and restart VTAM to use the start option.

- See the *z/OS Communications Server: SNA Resource Definition Reference* for a description of VTAM start options.
- See the *z/OS Communications Server: SNA Operation* for information about the DISPLAY BFRUSE Command, the DISPLAY STORUSE Command, and the MODIFY VTAMOPTS Command.
- See the *z/OS Communications Server: SNA Network Implementation Guide* for an explanation and description of buffer pools and for general information on buffer pool specification and allocation.
- See the *z/OS Communications Server: SNA Diagnosis Vol 2, FFST Dumps and the VIT* for information about analyzing dumps and about analyzing storage using the VIT analysis tool, if external trace is active.

IST1065I LOAD MODULE REQUESTED IPL ESTIMATED IPL

Explanation: VTAM issues this message as part of a subgroup of messages in response to a DISPLAY DISK command.

This message subgroup is displayed in a message group headed by IST951I. See the explanation of that message for additional information.

A complete description of this message subgroup follows.

```
IST1065I LOAD MODULE  REQUESTED IPL  ESTIMATED IPL
IST1066I load_module  requested_time estimated_time
⋮
```

This subgroup is issued when an IPL has been scheduled for at least one load module on the disk. IST1066I is repeated for each load module.

- If there is only one load module with a scheduled IPL, VTAM issues message IST1066I for this load module. In addition, IST1066I is repeated for all load modules even if they do not have a scheduled IPL. An example follows:

  ```
  IST1065I  LOAD MODULE  REQUESTED IPL  ESTIMATED IPL
  IST1066I  load_module  requested_time  estimated_time
  IST1066I  load_module  ***NA***        ***NA***
  IST1066I  load_module  ***NA***        ***NA***
  ```

- If there are no load modules with a scheduled IPL, VTAM does not issue the subgroup.

IST1066I

load_module is the name of the load module on the disk.

requested_time is the time for which an IPL was scheduled as entered in a MODIFY LOAD command. This time reflects the time zone where MODIFY LOAD was entered, not the time zone where DISPLAY DISK was entered.

estimated_time is the time the IPL will take place as calculated by VTAM. This time reflects the time zone where DISPLAY DISK was entered. Differences between *requested_time* and *estimated_time* can be caused by the following:

- The MODIFY LOAD and DISPLAY DISK commands were entered in different time zones.
- There was a network delay between VTAM and NCP when the MODIFY LOAD was entered. In this case, *estimated_time* is the actual IPL time.
- There is a network delay between VTAM and NCP when the DISPLAY DISK is entered. In this case, the actual IPL time will be earlier than *estimated_time*.

- The host system clock was adjusted between the time MODIFY LOAD was entered and the time DISPLAY DISK was entered.

requested_time and *estimated_time* are in the format *date,hh:mm* and are the date and time for which an IPL was scheduled. *date* is issued in the format specified in the VTAM start parameters; the default is *mm/dd/yy*. *hh:mm* is in the 24-hour system. For example, 1:00 p.m. is displayed as **13:00**.

System Action: Processing continues.

Operator Response: None.

Programmer Response: None.

IST1066I *load_module requested_time estimated_time*

Explanation: VTAM issues this message as part of a message subgroup. The first message in this subgroup is IST1065I. See the explanation of that message for a complete description.

IST1067I LOGICAL LINES:

Explanation: VTAM issues this message as part of a group of messages in response to a DISPLAY ID command for a PU that is the physical resource for one or more groups of logical lines. VTAM issues message IST080I to indicate the name and status of the logical lines associated with the preceding PU.

VTAM also issues this message as part of a group of messages in response to a DISPLAY ID command for a switched frame relay physical line whose switched PU is the physical resource for one or more groups of logical lines. VTAM issues message IST080I to indicate the name and status of the logical lines associated with the preceding physical line.

System Action: Processing continues.

Operator Response: None.

Programmer Response: None.

IST1068I PHYSICAL RESOURCE (PHYSRSC) = *puname*

Explanation: VTAM issues this message as part of a group of messages in response to a DISPLAY ID command for a line or a line group.

puname is the name of the physical resource associated with the resource (a logical line or line group containing logical lines or a transport resource list element) that is being displayed.

If the physical unit, defined in the NCP definition, whose name is specified by the PHYSRSC keyword is a switched PU that is not currently connected, then *highernode* is the physical line.

System Action: Processing continues.

Operator Response: None.

Programmer Response: None.

IST1069I PARAMETER *n* **FOR** *option* **MUST BE** *type*

Explanation: VTAM issues this message during START processing or in response to a MODIFY VTAMOPTS command when the *n*th parameter specified for start option *option* is not the correct *type*. Possible values for *type* are:

NUMERIC
: The value for *option* must be a numeric value.

TIMER
: The value for *option* must be in the form **xxI**, where **xx** is a numeric value and **I** is a character designation of a time interval (**S** = seconds, **M** = minutes, **H** = hours, **D** = days). Individual start options that use **TIMER** notation have different valid ranges. Refer to the *z/OS Communications Server: SNA Resource Definition Reference* for more information.

System Action: VTAM ignores *option*.

- If the error occurred during START processing, VTAM will issue message IST1311A to prompt you for the correct value of *option*.

- If the error occurred in response to a MODIFY VTAMOPTS command, processing continues.

Operator Response:

- If the error occurred during START processing, enter a valid value for parameter *n* of *option* in response to IST1311A. You can also enter a blank if you want to accept the default value for *option*.
- If the error occurred in response to a MODIFY VTAMOPTS command, ensure that you entered *option* correctly.

Programmer Response:

- If the error occurred during START processing, correct the value for *option* if *option* is coded in an ATCSTR*xx* file.
- If the error occurred in response to a MODIFY VTAMOPTS command, no further action is required.

For more information about VTAM start options, see the *z/OS Communications Server: SNA Resource Definition Reference*.

IST1070I *value* **FOR** *option* **NOT VALID – START CONTINUES**

Explanation: VTAM issues this message when the value specified for start option *option* is not valid.

System Action: VTAM ignores *option*. VTAM will issue message IST1311A to prompt you for the correct value of *option*.

Operator Response: Enter a valid value for *option* in response to message IST1311A. You can also enter a blank if you want to accept the default value for *option*.

For the NNSPREF start option, a prompt might be issued, depending on the type of error. If no prompt is issued, enter a MODIFY VTAMOPTS,NNSPREF command with the correct value following the completion of VTAM initialization.

Programmer Response: If *option* is coded in an ATCSTR*xx* file, correct the value for *option* in that file. For more information about VTAM start options, see the *z/OS Communications Server: SNA Resource Definition Reference*.

IST1071I SONLIM OPTION PARAMETER 1 MUST BE GREATER THAN PARAMETER 2

Explanation: VTAM issues this message when the second parameter for the SONLIM start option is greater than the first parameter.

System Action: VTAM ignores the values coded for SONLIM. VTAM will issue message IST1311A to prompt you for the correct value of SONLIM.

Operator Response: Enter the correct parameters for SONLIM in response to message IST1311A. You can also enter a blank if you want to accept the default value for SONLIM.

Programmer Response: If SONLIM is coded in an ATCSTR*xx* file, correct the value for SONLIM in that file. For more information about VTAM start options, see the *z/OS Communications Server: SNA Resource Definition Reference*.

IST1072I *option* **HAS TOO MANY PARAMETERS–START OPTION IGNORED**

Explanation: VTAM issues this message during START processing or in response to a MODIFY VTAMOPTS command when too many parameters are specified for start option *option*.

System Action: VTAM ignores *option*.

- If the error occurred during START processing, VTAM will issue message IST1311A to prompt you for the correct value of *option*.
- If the error occurred in response to a MODIFY VTAMOPTS command, processing continues.

Operator Response:

- If the error occurred during START processing, enter the correct parameters for *option* in response to IST1311A. You can also enter a blank if you want to accept the default value for *option*.
- If the error occurred in response to a MODIFY VTAMOPTS command, ensure that you entered *option* correctly.

Programmer Response:

- If the error occurred during START processing, correct the value for *option* if *option* is coded in an ATCSTR*xx* file.
- If the error occurred in response to a MODIFY VTAMOPTS command, no further action is required.

For more information about VTAM start options, see the *z/OS Communications Server: SNA Resource Definition Reference*.

IST1073I *option2* **CAN ONLY BE SPECIFIED AFTER OPTION** *option1*

Explanation: VTAM issues this message when start option *option2* for TRACE, NOTRACE, TNSTAT, or NOTNSTAT is out of sequence. Start option *option1* is TRACE, NOTRACE, TNSTAT, or NOTNSTAT. *option2* must be specified after *option1*.

System Action: VTAM ignores *option2*. VTAM will issue message IST1311A to prompt you for the correct value of *option1*.

Operator Response: Enter *option2* after a TRACE, NOTRACE, TNSTAT, or NOTNSTAT start option. You can also enter a blank if you want to accept the default value for *option1*.

Programmer Response: If *option2* is coded in an ATCSTR*xx* file, move the value for *option2* after the value for *option1* in that file. For more information about VTAM start options, see the *z/OS Communications Server: SNA Resource Definition Reference*.

IST1074I PARAMETERS FOR *option* **ARE NOT WITHIN THRESHOLD LIMITS**

Explanation: This message is issued when one of the following occurs while processing buffer pool start options:

- The base number (baseno) is less than the slow point (slowpt) or expansion point (xpanpt).
- The expansion point is not 0 and is less than the slow point. For SPBUF and LPBUF, the difference between the base number and the expansion point or between the base number and the slow point is less than or equal to five.

System Action: VTAM ignores *option*. VTAM will issue message IST1311A to prompt you for the correct value of *option*.

Operator Response: Enter the correct values for *option* in response to message IST1311A. You can also enter a blank if you want to accept the default values for *option*.

Programmer Response: If *option* is coded in an ATCSTR*xx* file, correct the value for *option* in that file. For more information about VTAM start options, see the *z/OS Communications Server: SNA Resource Definition Reference*.

IST1075I PARAMETER *n* **FOR** *option* **IS NOT VALID**

Explanation: VTAM issues this message during START processing or in response to a MODIFY VTAMOPTS command when the *n*th parameter specified for start option *option* contains a value that is not valid.

System Action: VTAM ignores *option*.

- If the error occurred during START processing, VTAM will issue message IST1311A to prompt you for the correct value of *option*.
- If the error occurred in response to a MODIFY VTAMOPTS command, processing continues.

Operator Response:

- If the error occurred during START processing, reenter all values for *option* in response to IST1311A. You can also enter a blank if you want to accept the default value for *option*.
- If the error occurred in response to a MODIFY VTAMOPTS command, ensure that you entered *option* correctly.

Programmer Response:

- If the error occurred during START processing, correct the value for *option* if *option* is coded in an ATCSTR*xx* file.
- If the error occurred in response to a MODIFY VTAMOPTS command, no further action is required.

For more information about VTAM start options, see the *z/OS Communications Server: SNA Resource Definition Reference*.

IST1076I VALUE DEFINED FOR HOSTPU, *value***, IS A RESERVED KEYWORD**

Explanation: VTAM issues this message when the host subarea PU name defined on the HOSTPU start option is one of the following reserved words: VTAMSEG, VTAM, ISTNOP, ISTPDCLU, ISTGROUP, or ISTATA00.

value is the value defined for HOSTPU.

System Action: VTAM ignores the value of HOSTPU. VTAM will issue message IST1311A to prompt you for the correct value of HOSTPU.

Operator Response: Enter a valid value for HOSTPU in response to message IST1311A. You can also enter a blank if you want to accept the default value for HOSTPU.

Programmer Response: If HOSTPU is coded in an ATCSTR*xx* file, correct the value for HOSTPU in that file. For more information about VTAM start options, see the *z/OS Communications Server: SNA Resource Definition Reference*.

IST1077I OPTION *option* **AFTER** *type keyword* **IS NOT VALID**

Explanation: VTAM issues this message when an option specified after a certain type of TRACE/NOTRACE is not valid. *option* is a VTAM start option. *type* is the type of trace that is not valid. *Keyword* will be **TRACE** or **NOTRACE**.

System Action: VTAM ignores the TRACE or NOTRACE start option. VTAM will issue message IST1311A to prompt you for the correct value of the TRACE or NOTRACE option.

Operator Response: Enter the TRACE or NOTRACE again with all options in response to message IST1311A. You can also enter a blank if you want to accept the default values for the TRACE or NOTRACE.

Programmer Response: If these start options are coded in an ATCSTR*xx* file, correct the option value for the TRACE or NOTRACE in that file. For more information about VTAM start options, see the *z/OS Communications Server: SNA Resource Definition Reference*.

IST1078I LIST START OPTION CANNOT BE IN START FILE–OPTION IGNORED

Explanation: VTAM issues this message when the LIST start option is found in an ATCSTR*xx* file. This start option can be entered only when prompted or on the VTAM START command. See the *z/OS Communications Server: SNA Resource Definition Reference* for more information on the LIST start option.

System Action: VTAM ignores the specified start option. Processing continues.

Operator Response: Save the system log for problem determination.

Programmer Response: Remove LIST=*xx* statements from any ATCSTR*xx* files.

IST1079I *ncpname* **ACTIVATION CONTINUES–CANNOT ASSOCIATE** *groupname*

Explanation: This message is the first in a subgroup of messages that VTAM issues during the activation of NCP *ncpname*. A complete description of the message subgroup follows.

```
IST1079I ncpname ACTIVATION CONTINUES–CANNOT ASSOCIATE groupname
IST1117I PHYSICAL RESOURCE (PHYSRSC) puname {IS NOT KNOWN|IS NOT A PU}
```

IST1079I

ncpname is the name of the NCP that is being activated.

groupname is the name of the line group that is defined to have an association with physical resource *puname* in message IST1117I.

IST1117I

puname is the resource defined on the PHYSRSC operand of the GROUP definition statement.

This message describes the reason VTAM cannot associate *groupname* in message IST1079I and *puname*.

System Action: VTAM does not associate line group *groupname* or its subordinate resources with *puname*. *groupname* is activated as an independent line group.

Operator Response: Save the system log for problem determination.

Programmer Response: Ensure that the PHYSRSC operand on the GROUP statement for *groupname* specifies a PU statement in the same NCP definition and that the PU is owned by the host activating the NCP.

IST1080I {DUMP|LOAD} STATION NAME = *station_name*

Explanation: VTAM issues this message as part of a group of messages in response to a DISPLAY ID command for a PU type 4.

station_name is the DUMP or LOAD station name for an NCP. If the DUMP or LOAD station name is not available when the DISPLAY command is issued, VTAM displays *****NA***** in this field.

System Action: Processing continues.

Operator Response: None.

Programmer Response: None.

IST1081I ADJACENT LINK STATION = *alsname*

Explanation: VTAM issues this message as part of a group of messages in response to a DISPLAY ID command for an LU.

alsname is the name of the adjacent link station associated with the LU specified in the DISPLAY ID command.

System Action: Processing continues.

Operator Response: None.

Programmer Response: None.

IST1082I GENERATED ADDRESS FOR *cdrscname* **DELETED FROM** *alsname*

Explanation: VTAM issues this message in response to an address mismatch error. VTAM attempts to delete cross domain resource *cdrscname* that was generated under adjacent link station *alsname*. This message indicates that *cdrscname* was deleted.

If the PU for *alsname* is not found, VTAM issues *****NA*****.

System Action: Processing continues.

Operator Response: None.

Programmer Response: None.

IST1083I ERROR ACTIVATING ADJCP *adjcpname* **SENSE =** *code*

Explanation: VTAM issues this message when it encounters an error during the dynamic allocation of an adjacent control point.

adjcpname is the name of the adjacent control point. If the network where the resource resides is known to VTAM, *adjcpname* is issued as a network-qualified name in the form *netid.name*.

code indicates the reason for the error. See the *z/OS Communications Server: IP and SNA Codes* for a description of *code*.

System Action: Processing continues.

Operator Response: Save the system log for problem determination.

Programmer Response: Use the information in the system log and the explanation of *code* to resolve the problem.

IST1084I START LIST IGNORED – *name* **WILL BE USED**

Explanation: VTAM issues this message when an error occurs while processing the start list in message IST1215I and LISTBKUP=*backup_list* or LISTBKUP=DEFAULTS has been specified.

name can be one of the following:

- If *backup_list* is specified on the LISTBKUP start option, *name* is the name of the backup start list that will be processed in the place of the start list in error.
- If DEFAULTS is specified on the LISTBKUP start option, *name* is either **VTAM DEFAULTS** or **ATCSTR00**.

– If *name* is **VTAM DEFAULTS**, the error occurred while processing ATCSTR00, and start option values are reset to the IBM defaults.
– If *name* is **ATCSTR00**, the error occurred while processing ATCSTR*xx*, and start option values are reset to their values prior to processing ATCSTR*xx*.

See the *z/OS Communications Server: SNA Resource Definition Reference* for information about the LISTBKUP start option. See the *z/OS Communications Server: SNA Network Implementation Guide* for more information.

System Action: VTAM ignores the start list in error and uses *name*. Other processing continues.

Operator Response: None.

Programmer Response: None.

IST1085I *type* **ACTIVATION ERROR** *resource* **SENSE =** *code*

Explanation: VTAM issues this message when an error is encountered during the activation of a boundary function-based connection or a virtual route-based connection.

type indicates the type of transmission group connection that failed and is one of the following:
BF-TG
Boundary function-based connection
VR-TG
Virtual route-based connection

resource is the name of the adjacent control point. If the network where the resource resides is known to VTAM, *resource* is issued as a network-qualified name in the form **CP** *netid.name*.

code indicates the reason for the error. See the *z/OS Communications Server: IP and SNA Codes* for a description of *code*.

System Action: Processing continues.

Operator Response: Save the system log for problem determination.

Programmer Response: Use the information in the system log and the explanation of *code* to resolve the problem.

IST1086I **APPN CONNECTION FOR** *adjcpname* **IS ACTIVE–TGN=** *tgn*

Explanation: VTAM issues this message when an APPN connection for an adjacent control point becomes active.

adjcpname is the name of the adjacent control point. If the network where the resource resides is known to VTAM, *adjcpname* is issued as a network-qualified name in the form *netid.name*.

tgn is the transmission group number.

System Action: Processing continues.

Operator Response: None.

Programmer Response: None.

IST1088I **ADJCP** *adjcpname* **HAS BEEN DEACTIVATED**

Explanation: VTAM issues this message when the deactivation of an adjacent control point major node is completed.

adjcpname is the name of the adjacent control point. If the network where the resource resides is known to VTAM, *adjcpname* is issued as a network-qualified name in the form *netid.name*.

System Action: Processing continues.

Operator Response: None.

Programmer Response: None.

IST1089I MODIFY FAILED–TGP *tgpname* **DOES NOT EXIST**

Explanation: VTAM issues this message in response to a MODIFY TGP command.

tgpname is the name of the transmission group profile that was entered on the command.

System Action: Processing continues.

Operator Response: Ensure that you entered *tgpname* correctly. If the command fails again, save the system log for problem determination.

Programmer Response: Verify that *tgpname* is correct, and that the resource is defined to VTAM. If not, update the TGP definition.

IST1090I TGP FOR *type resource* **IS SET TO** *tgpname*

Explanation: VTAM issues this message in response to a MODIFY TGP command.

Possible values of *type* and *resource* are:

Type **Resource**

CDRM *cdrmname*

cdrmname is the name of a CDRM capable of requesting a VR-based (virtual route-based) TG connection. *cdrmname* can be a network-qualified name in the form *netid.name*.

type is CDRM when TGN=255 is specified on the MODIFY TGP command.

CP *cpname*(*tgn*)

cpname is the name of the adjacent control point. If *cpname* is session-capable, VTAM issues *cpname* as a network-qualified name in the form *netid.name*.

tgn is the transmission group number.

type is CP when TGN is specified as anything other than 255 on the MODIFY TGP command.

LINE *linename*

linename is the name of an active line (NCP/Token-Ring Interconnection [NTRI]) that has the connection network function defined.

PORT *portname*

portname is the name of an active port (external communication adapter [XCA]) that has the connection network function defined.

PU *puname*

puname is the name of an active type 2.1 physical unit.

tgpname is the name of the transmission group profile.

System Action: Processing continues.

Operator Response: None.

Programmer Response: None.

IST1091I MODIFY TGP FAILED – *type resource* **IS UNKNOWN**

Explanation: VTAM issues this message in response to a MODIFY TGP command when *type resource* is not known to VTAM.

Possible values of *type* and *resource* are:

Type **Resource**

CDRM *cdrmname*

cdrmname is the name of a CDRM capable of requesting a VR-based (virtual route-based) TG connection. *cdrmname* can be a network-qualified name in the form *netid.name*.

type is CDRM when TGN=255 is specified on the MODIFY TGP command.

CP *cpname*(*tgn*)

cpname is the name of the adjacent control point. If *cpname* is session-capable, VTAM issues *cpname* as a network-qualified name in the form *netid.name*.

tgn is the transmission group number.

type is CP when TGN is specified as anything other than 255 on the MODIFY TGP command.

ID *resourcename*

resourcename is the name of the resource. The type of resource is not known to VTAM.

type is ID when TGN is not specified on the MODIFY TGP command.

LINE *linename*

linename is the name of an active line (NCP/Token-Ring Interconnection [NTRI]) that has the connection network function defined.

PORT *portname*

portname is the name of an active port (external communication adapter [XCA]) that has the connection network function defined.

PU *puname*

puname is the name of an active type 2.1 physical unit.

System Action: Processing continues.

Operator Response: Ensure that you entered *resource* correctly. If VTAM continues to issue this message, save the system log for problem determination.

Programmer Response: Verify that *type resource* is correct and, if not, update the TGP definition. See the *z/OS Communications Server: SNA Resource Definition Reference*.

IST1092I MODIFY TGP FAILED, INSUFFICIENT STORAGE

Explanation: VTAM issues this message is response to a MODIFY TGP command when there is insufficient storage.

System Action: Processing continues.

Operator Response: Retry the MODIFY TGP command. If VTAM continues to issue this message, enter the DISPLAY STORUSE command to display storage usage for storage pools. Message IST981I displays total VTAM private storage information. If this message does not appear in the display, you may need to reissue the DISPLAY STORUSE command, specifying a higher value for the NUM operand. See the *z/OS Communications Server: SNA Operation* for additional information.

Save the system log and request a dump for problem determination.

Programmer Response: Increase storage as required.

See the *z/OS Communications Server: SNA Operation* for more information on the DISPLAY STORUSE command. The *z/OS Communications Server: SNA Diagnosis Vol 1, Techniques and Procedures* provides additional information.

See the *z/OS Communications Server: SNA Diagnosis Vol 2, FFST Dumps and the VIT* for information about analyzing dumps and about analyzing storage using the VIT analysis tool, if external trace is active.

IST1093I *start_option1* **IS IGNORED—ONLY VALID WHEN** *start_option2* **IS SPECIFIED**

Explanation: VTAM issues this message when *start_option2*, which is required with *start_option1*, is not specified.

start_option2 is the name of the start option or the name of the start option with its required value.

System Action: *start_option1* is ignored. Other processing continues.

Operator Response: Save the system log for problem determination.

Programmer Response: Examine the VTAM start options contained in ATCSTR*xx* and verify that the correct options

are specified. *start_option2* needs to be specified in order to specify *start_option1*. See the *z/OS Communications Server: SNA Resource Definition Reference*.

IST1094I GWSSCP VALUE FORCED TO NO–NODETYPE IS EN

Explanation: VTAM issues this message when both GWSSCP=YES and NODETYPE=EN are specified as start options. An end node (EN) cannot be used for intermediate routing. This message is also issued when the default value for GWSSCP is used and NODETYPE=EN is specified.

System Action: The GWSSCP start option is changed to NO. Processing continues.

Operator Response: Save the system log for problem determination.

Programmer Response: Examine the VTAM start options contained in ATCSTR*xx* and verify that the correct options are specified.

Determine whether this node is to be used for intermediate routing.
- If it is, specify NODETYPE=NN.
- If not, use GWSSCP=NO.

See the *z/OS Communications Server: SNA Resource Definition Reference* for more information on the GWSSCP and NODETYPE start options.

IST1095I INITIATION FAILED FOR *cpname* – NO LINK TO ADJCP

Explanation: VTAM issues this message in response to a VARY ACT,ID=*cpname* command.

Session initiation failed because no usable link exists for a control point service manager (CPSVCMG) session to the adjacent CP. The cross-domain resource (CDRSC) representing the adjacent CP remains active because the adjacent CP can send a BIND to the host.

cpname is the name of the adjacent control point. VTAM issues *cpname* as a network-qualified name in the form *netid.name*.

Note: If this message is displayed as the result of a VARY ACT command for a CDRM on a VRTG connection, ignore this message. CP-CP sessions will become active once the SSCP-SSCP session becomes active.

System Action: Processing continues.

Operator Response: Verify that the link supports CP-CP sessions by entering the DISPLAY ID=*cpname* command.

If your node does not support CP-CP sessions, reactivate the link and initiate the desired session by entering the VARY ACT,ID=*puname*,CPCP=YES command. This command will override your PU definition. If this is not successful, the other node does not support CP-CP sessions.

Programmer Response: If the other node does not support CP-CP sessions, the following steps are required:
1. Deactivate the other node
2. Change the PU definition(s) for the other node
3. Reactivate the other node.

IST1096I CP-CP SESSIONS WITH *adjcpname* ACTIVATED

Explanation: This message is part of a group of messages that VTAM issues when CP-CP sessions with an adjacent control point (CP) have been activated and are usable. A complete description of the message group follows.

```
 IST1096I   CP-CP SESSIONS WITH adjcpname ACTIVATED
[IST1673I  SWITCH TO PREFERRED NETWORK NODE SERVER IS COMPLETE]
 IST314I    END
```

IST1096I

This message identifies the adjacent control point (CP) with which this node has successfully activated CP-CP sessions. This message may be issued in response to a command.

Note: CP-CP sessions refer to the contention winner and contention loser sessions of the CP-CP session pair.

adjcpname is the name of the adjacent control point. If the network where the resource resides is known to VTAM, *adjcpname* is issued as a network-qualified name in the form *netid.name*

IST1673I

VTAM issues this message when this end node has deactivated CP-CP sessions with its current network node server and then successfully activated CP-CP sessions with its preferred network node server, which is identified in message IST1096I. This message may be issued in response to a MODIFY VTAMOPTS,NNSPREF command.

System Action: Processing continues.

Operator Response: None

Programmer Response: None

IST1097I CP-CP SESSION WITH *cpname* TERMINATED

Explanation: This message is the first in a group of messages that VTAM issues when a CP-CP session with an adjacent control point has been terminated. This message may be issued in response to a command. A complete description of the message group follows.

```
IST1097I  CP-CP SESSION WITH cpname TERMINATED
IST1280I  SESSION TYPE = sessiontype – SENSE = code
IST314I   END
```

IST1097I

cpname is the name of the adjacent control point. If *cpname* is session-capable, VTAM issues *cpname* as a network-qualified name in the form *netid.name*.

IST1280I

sessiontype indicates the session type of the CP-CP session that is terminating and is either **CONWINNER** (contention winner) or **CONLOSER** (contention loser).

code is the sense code associated with the termination. See the *z/OS Communications Server: IP and SNA Codes* for an explanation of *code*.

System Action: Processing continues.

Operator Response: You can take the following actions:

- If this is a nonswitched connection, display the status of the resources.
- Attempt to reactivate the CP-CP sessions by issuing a VARY ACT,ID=*cpname* command.

Programmer Response: None.

IST1098I *resource* DEACTIVATED, DEPLETING IO BUFFER POOL

Explanation: VTAM deactivates the logical unit in an SSCP-LU session or physical unit in an SSCP-PU session because the session is depleting the I/O buffer pool. This happens when VTAM detects a session using more of the buffer pool than allowed.

resource is the name of the LU or PU that is deactivated.

Message IST930I or IST1153I is displayed before this message and identifies the two session partners.

System Action: Processing continues.

Operator Response: Reactivate the session after you find and correct the reason for the depletion. For additional information, see message IST930I or IST1153I.

Programmer Response: None.

IST1099I SESSION TERMINATED, DEPLETING *bp* BUFFER POOL

Explanation: VTAM terminates the LU-LU session because the session is depleting the *bp* buffer pool.

bp is the name of the buffer pool and is LF. This can be an LU-LU or a CP-CP session.

This occurs when VTAM detects a session using a percentage of the I/O buffer pool that is greater than or equal to the value specified on the HOTIOTRM start option.

Message IST930I or IST1153I is displayed before this message and identifies the two LU-LU session partners.

System Action: Processing continues.

Operator Response: Reactivate the session after you find and correct the reason for the depletion. For additional information, see message IST930I or IST1153I.

Programmer Response: None.

IST1100I ADJACENT CONTROL POINTS FROM MAJOR NODE *majornode*

Explanation: This message is the first in a group of messages that VTAM issues in response to a DISPLAY command for an adjacent control point major node. A full description of the message group follows:

```
IST1100I  ADJACENT CONTROL POINTS FROM MAJOR NODE majornode
IST1102I  NODENAME    NODETYPE CONNECTIONS CP CONNECTIONS NATIVE
IST1103I  nodename    nodetype connections cp_connections native
:
IST314I   END
```

IST1100I

majornode is the name of the adjacent control point major node.

IST1102I

This message is a header message for the information displayed in message IST1103I.

IST1103I

nodename is the network-qualified name of the minor node in the form *netid.name*.

nodetype is the type of node and can be **EN** (end node), **NN** (network node), **BN** (border node), or **VN** (virtual node). ***NA*** is displayed in either of the following situations:

– The device is connected and is a LEN node.

– The node type has not been predefined for the adjacent CP. The correct node type will be displayed when a connection to the node is made.

connections is the number of active connections to the node.

cp_connections is the number of active connections that show support for CP-CP sessions.

native indicates whether *nodename* is in the same APPN topology subnetwork as the node issuing the DISPLAY command. Possible values are :

YES If *nodetype* is **NN** or **BN** and *nodename* shares APPN topology information with the node issuing the DISPLAY command.

NO If *nodetype* is **NN** or **BN** and *nodename* does not share APPN topology information with the node issuing the DISPLAY command.

NA If *nodetype* is **EN** or **VN**.

See the *z/OS Communications Server: SNA Network Implementation Guide* for more information on nodetypes and APPN connections.

System Action: Processing continues.

Operator Response: None.

Programmer Response: None.

IST1101I ADJCP DISPLAY SUMMARY FOR *adjcpname*

Explanation: This message is the first of a subgroup of messages that VTAM issues in response to a DISPLAY ADJCP command for an adjacent control point.

Possible message groups follow.

- If there are active TG connections, VTAM issues the following messages:

```
IST350I   DISPLAY TYPE = ADJACENT CONTROL POINT
IST486I   STATUS= ACTIV, DESIRED STATE= ACTIV
IST1197I  ADJCP MAJOR NODE = majornode
IST1101I  ADJCP DISPLAY SUMMARY FOR adjcpname
IST1102I  NODENAME    NODETYPE CONNECTIONS CP_CONNECTIONS NATIVE
IST1103I  nodename    nodetype connections cp_connections native
:
IST1104I  CONNECTION SUMMARY FOR adjcpname
IST1105I  RESOURCE STATUS   TGN  CP-CP  TG CHARACTERISTICS
IST1106I  resource status   tgn  cp-cp  tg_characteristics
:
IST314I  END
```

- If there are no active TG connections, VTAM issues the following messages:

```
IST350I   DISPLAY TYPE = ADJACENT CONTROL POINT
IST486I   STATUS= ACTIV, DESIRED STATE= ACTIV
IST1197I  ADJCP MAJOR NODE = majornode
IST1101I  ADJCP DISPLAY SUMMARY FOR adjcpname
IST1102I  NODENAME    NODETYPE CONNECTIONS CP_CONNECTIONS NATIVE
IST1103I  nodename    nodetype connections cp_connections native
:
IST1104I  CONNECTION SUMMARY FOR adjcpname
IST172I   NO CONNECTIONS ACTIVE
IST314I  END
```

IST1101I

adjcpname is the name of the adjacent control point. If the network where the resource resides is known to VTAM, *adjcpname* is issued as a network-qualified name in the form *netid.name*.

IST1102I

This message is a header message for the information displayed in message IST1103I.

IST1103I

nodename is the name of the adjacent control point. If the network where the resource resides is known to VTAM, *nodename* is issued as a network-qualified name in the form *netid.name*.

nodetype is the type of node and can be **EN** (end node), **NN** (network node), or **BN** (border node) or **VN** (virtual node). ***NA*** is displayed in either of the following situations:

– The device is connected and is a LEN node.

– The node type has not been predefined for the adjacent CP. The correct node type will be displayed when a connection to the node is made.

connections is the number of active connections to the node.

cp_connections is the number of active connections that show support for CP-to-CP sessions.

native indicates whether *nodename* is in the same APPN topology subnetwork as the node issuing the DISPLAY command. Possible values are :

YES If *nodetype* is **NN** or **BN** and *nodename* shares APPN topology information with the node issuing the DISPLAY command.

NO If *nodetype* is **NN** or **BN** and *nodename* does not share APPN topology information with the node issuing the DISPLAY command.

NA If *nodetype* is **EN** or **VN**.

See the *z/OS Communications Server: SNA Network Implementation Guide* for more information on APPN connections and nodetypes.

IST1104I

adjcpname is the name of the adjacent control point. If the network where the resource resides is known to VTAM, *adjcpname* is issued as a network-qualified name in the form *netid.name*.

IST1105I

This message is a header message for the information displayed in message IST1106I.

IST1106I

resource is the name of the PU, CDRM, PORT, or LINE associated with the transmission group number.

status is the connection status and can be one of the following:

AC/N
Active, but not reported to APPN topology and routing services

AC/R
Active and reported to APPN topology and routing services

AO/N
Active with override but not reported to APPN topology and routing services

AO/R
Active with override and reported to APPN topology and routing services

AP/N
APPN connection pending, but not reported to APPN topology and routing services

AQ/N
Quiesced, but not reported to APPN topology and routing services

AQ/R
Quiesced and reported to APPN topology and routing services

IN/N
Inactive, but not reported to APPN topology and routing services

IN/R
Inactive and reported to APPN topology and routing services

NEV
Never reported to APPN topology and routing services

tgn is the transmission group number.

cp-cp is a user-defined value that can be specified on the GROUP, LINE, or PU definition statements or on the VARY ACT command. This value indicates whether the connection is capable of supporting CP-CP sessions.

– Possible values are **YES** or **NO**.
– For additional information on the CPCP operand, see the *z/OS Communications Server: SNA Resource Definition Reference*.

tg_characteristics is a 16-byte hexadecimal string representing the transmission group characteristics for *puname*. ****** NA ****** is displayed if *puname* is a low entry networking (LEN) node. LEN PUs do not have transmission groups associated with them.

Byte	Description
1	TG status and CP-CP session support.

Bit	Description
1	TG status **0** TG is not operational **1** TG is operational
2	Reserved (zero)
3	TG status **0** TG is not quiescing **1** TG is quiescing
4–8	Reserved (not always zero)

2	Capacity. This value corresponds to the CAPACITY value coded in the TGP definition statement. The displayed value is an internal representation of the coded value. For more information on how the CAPACITY value coded in the TG profile is mapped to the internal representation used by VTAM, see the *z/OS Communications Server: SNA Resource Definition Reference*.
3–7	Reserved (zero).

8 Cost per unit time. This value corresponds to the COSTTIME value coded in the TGP definition statement.

9 Cost per byte. This value corresponds to the COSTBYTE value coded in the TGP definition statement.

10 Reserved (zero).

11 Security. This value corresponds to the SECURITY value coded in the TGP definition statement as follows:
X'01' UNSECURE
X'20' PUBLIC
X'40' UNDERGRO
X'60' SECURE
X'80' GUARDED
X'A0' ENCRYPT
X'C0' SHIELDED

12 Propagation delay. This value corresponds to the PDELAY value coded in the TGP definition statement as follows:
X'4C' NEGLIGIB
X'71' TERRESTR
X'91' PACKET
X'99' LONG

13 Reserved (zero).

14–16 User-defined. These values correspond to the values coded for UPARM1, UPARM2, and UPARM3 respectively in the TGP definition statement.

System Action: Processing continues.

Operator Response: Save the system log for problem determination.

Programmer Response: If there are transmission group characteristics (contained in *tg_characteristics*) that you do not want, recode the resource definition statements.

See the *z/OS Communications Server: SNA Resource Definition Reference* for more information.

IST1102I NODENAME NODETYPE CONNECTIONS CP CONNECTIONS NATIVE

Explanation: This message is part of a group of messages that VTAM issues in response to a DISPLAY ID=adjcpname command or a DISPLAY ADJCP command.

- DISPLAY ID=*adjcpname* command

  See the explanation of message IST1100I for a complete description of this message group.
- DISPLAY ADJCP command

  See the explanation of message IST1101I and message IST1197I for a complete description of possible message groups.

IST1103I *nodename nodetype connections cp_connections native*

Explanation: This message is part of a group of messages that VTAM issues in response to a DISPLAY ID=*adjcpname* command or a DISPLAY ADJCP command.

- DISPLAY ID=*adjcpname* command

  See the explanation of message IST1100I for a complete description of this message group.
- DISPLAY ADJCP command

  See the explanation of message IST1101I and message IST1197I for a complete description of possible message groups.

IST1104I CONNECTION SUMMARY FOR *adjcpname*

Explanation: This message is part of a group of messages that VTAM issues in response to a DISPLAY ADJCP command. See the explanations of message IST1101I and message IST1197I for a complete description of possible message groups.

IST1105I RESOURCE STATUS TGN CP-CP TG CHARACTERISTICS

Explanation: VTAM issues this message as part of a group of messages in response to the following commands:

- DISPLAY ID command for a type 2.1 PU, a CDRM with a virtual route-based transmission group, an external communication adapter (XCA) port that is part of a connection network, or a NCP/Token-Ring interconnected (NTRI) line that is part of a connection network. A complete description of this message group follows.

```
IST1105I  RESOURCE STATUS   TGN  CP-CP  TG CHARACTERISTICS
IST1106I  resource status   tgn  cp-cp  tg_characteristics
:
IST314I   END
```

- DISPLAY ADJCP command for an adjacent control point

  See the explanations of message IST1101I and message IST1197I for a complete description of possible message groups.

resource is the name of the PU, CDRM, PORT, or LINE associated with the transmission group or connection network virtual routing node.

status displays the connection status and can be one of the following:

AC/N
Active, but not reported to APPN topology and routing services.

AC/R
Active and reported to APPN topology and routing services.

AO/N
Active with override but not reported to APPN topology and routing services.

AO/R
Active with override and reported to APPN topology and routing services.

AP/N
APPN connection pending and not reported to APPN topology and routing services.

AQ/N
Quiesced, but not reported to APPN topology and routing services.

AQ/R
Quiesced and reported to APPN topology and routing services.

IN/N
Inactive, but not reported to APPN topology and routing services.

IN/R
Inactive and reported to APPN topology and routing services.

NEV
Never reported to APPN topology and routing services.

tgn is the transmission group number. ***NA*** is displayed if there is no TG number assigned to *puname*.

cp-cp is a user-defined value that can be specified on the GROUP, LINE, or PU definition statements or on the VARY ACT command. This value indicates whether the connection is capable of supporting CP-CP sessions.

- Possible values are **YES** or **NO**.
- For additional information on the CPCP operand, see the *z/OS Communications Server: SNA Resource Definition Reference*.

tg_characteristics is a 16-byte hexadecimal string representing the transmission group characteristics for *puname*. ****** NA ****** is displayed if *puname* is a low entry networking (LEN) node. LEN PUs do not have transmission groups associated with them.

Byte	Description
1	TG status and CP-CP session support.

Bit	Description
1	TG status **0** TG is not operational **1** TG is operational
2	Reserved (zero)
3	TG status **0** TG is not quiescing **1** TG is quiescing
4–8	Reserved (not always zero)

2 Capacity. This value corresponds to the CAPACITY value coded in the TGP definition statement. The displayed value is an internal representation of the coded value. For more information on how the CAPACITY value coded in the TG profile is mapped to the internal representation used by VTAM, see the *z/OS Communications Server: SNA Resource Definition Reference*.

3–7 Reserved (zero).

8 Cost per unit time. This value corresponds to the COSTTIME value coded in the TGP definition statement.

9 Cost per byte. This value corresponds to the COSTBYTE value coded in the TGP definition statement.

10 Reserved (zero).

11 Security. This value corresponds to the SECURITY value coded in the TGP definition statement as follows:
X'01' UNSECURE
X'20' PUBLIC
X'40' UNDERGRO
X'60' SECURE
X'80' GUARDED
X'A0' ENCRYPT
X'C0' SHIELDED

12 Propagation delay. This value corresponds to the PDELAY value coded in the TGP definition statement as follows:
X'4C' NEGLIGIB
X'71' TERRESTR
X'91' PACKET
X'99' LONG

13 Reserved (zero).

14–16 User-defined. These values correspond to the values coded for UPARM1, UPARM2, and UPARM3 respectively in the TGP definition statement.

System Action: Processing continues.

Operator Response: None.

Programmer Response: If there are transmission group characteristics (contained in *tg_characteristics*) that you do not want, change the TGP definitions.

See the *z/OS Communications Server: SNA Resource Definition Reference* for more information on defining TGP definitions.

IST1106I *resource status tgn cp-cp tg_characteristics*

Explanation: This message is part of a group of messages that VTAM issues in response to a DISPLAY ID command for a type 2.1 PU, a VRTG-capable CDRM, a PORT (XCA) that is part of connection network, or a LINE (NTRI) that is part of a connection network, or DISPLAY ADJCP command. The first message in the group is IST1105I. See the explanation of that message for a complete description.

IST1107I TGP NAME TG CHARACTERISTICS

Explanation: This message is the first in a group of messages that VTAM issues in response to a DISPLAY TGPS command. A complete description of the message group follows.

```
 IST1107I  TGP NAME TG CHARACTERISTICS
 IST1108I  tgpname  tg_characteristics
⋮
[IST1315I DISPLAY TRUNCATED AT MAX = number]
 IST1454I count TGP(S) DISPLAYEDIST314I   END
```

IST1107I

This message is a header message for information displayed in IST1108I.

IST1108I

tgpname is the transmission group profile name.

tg_characteristics is a 16-byte hexadecimal string representing the transmission group characteristics for the PU associated with *tgpname*. ****** NA ****** is displayed if the PU is a low entry networking (LEN) node. LEN PUs do not have transmission groups associated with them.

Byte	Description
1	This byte is zero when you display a TG profile, but other values may appear when you display the TG characteristics for an active resource. (for example, the output of the DISPLAY ADJCP command).
2	Capacity. This value corresponds to the CAPACITY value coded in the TGP definition statement. The displayed value is an internal representation of the coded value. For more information on how the CAPACITY value coded in the TG profile is mapped to the internal representation used by VTAM, see the *z/OS Communications Server: SNA Resource Definition Reference*.
3–7	Reserved (zero).
8	Cost per unit time. This value corresponds to the COSTTIME value coded in the TGP definition statement.
9	Cost per byte. This value corresponds to the COSTBYTE value coded in the TGP definition statement.
10	Reserved (zero).
11	Security. This value corresponds to the SECURITY value coded in the TGP definition statement as follows: **X'01'** UNSECURE **X'20'** PUBLIC **X'40'** UNDERGRO **X'60'** SECURE **X'80'** GUARDED **X'A0'** ENCRYPT **X'C0'** SHIELDED
12	Propagation delay. This value corresponds to the PDELAY value coded in the TGP definition statement as follows: **X'4C'** NEGLIGIB **X'71'** TERRESTR **X'91'** PACKET **X'99'** LONG
13	Reserved (zero).
14–16	User-defined. These values correspond to the values coded for UPARM1, UPARM2, and UPARM3 respectively in the TGP definition statement.

IST1315I

number is the value specified for the MAX operand.

IST1454I

count is the total number of transmission group profiles displayed.

System Action: Processing continues.

Operator Response: None.

Programmer Response: None.

IST1108I *tgpname tg_characteristics*

Explanation: This message is part of a message group that VTAM issues in response to a DISPLAY TGPS command. The first message in the group is IST1107I. See the explanation of that message for a complete description.

IST1110I ACTIVATION OF CP-CP SESSION WITH *cpname* **FAILED**

Explanation: This message is the first in a group of messages that VTAM issues when a CP-CP session with *cpname* cannot be activated. A complete description of the message group follows.

```
 IST1110I ACTIVATION OF CP-CP SESSION WITH cpname FAILED
[IST1002I  RCPRI=rcpri RCSEC=rcsec]
[IST1111I  ADJACENT NODE DOES NOT SUPPORT UNSOLICITED BINDS]
[IST1112I  CP ALREADY HAS A CP-CP SESSION WITH current_NN]
[IST1113I  EN-EN SESSION IS NOT VALID]
[IST1119I  FAILURE REASON IS INSUFFICIENT STORAGE]
[IST1246I  ADJACENT CP NOT DEFINED IN CURRENT NETWORK NODE SERVER LIST]
[IST1247I  ALL ATTEMPTS TO ESTABLISH A SESSION WERE UNSUCCESSFUL]
[IST1280I SESSION TYPE = sessiontype – SENSE = code]
[IST1356I  NETWORK NODE DOES NOT PROVIDE REQUIRED SERVER FUNCTION]
[IST1507I  VR-BASED TG NOT SUPPORTED]
[IST1508I  CP-CP SESSIONS ON VR-BASED TG NOT SUPPORTED]
[IST1676I  SWITCH TO PREFERRED NETWORK NODE SERVER FAILED - CODE = code]
[IST1765I  ADJACENT CP WINNER LOSER STATE NODE ANDCB]
[IST1766I adjacent_cp cw_state cl_state state node address]
```

IST1110I

cpname is the name of the adjacent control point. If *cpname* is session-capable, VTAM issues *cpname* as a network-qualified name in the form *netid.name*.

Subsequent messages in the group indicate the reason that VTAM cannot activate the CP-CP session.

IST1002I

This message is issued when there is a nonzero value in either or both of the RCPRI or RCSEC return code fields.

rcpri is the value of the primary return code issued by VTAM.

rcsec is the value of the secondary return code issued by VTAM.

See the *z/OS Communications Server: IP and SNA Codes* for a detailed explanation of *rcpri* and *rcsec*.

IST1111I

This message is issued in response to a VARY ACT,ID=*cpname* command. The adjacent node does not support receipt of unsolicited binds. It will not accept another node sending a bind to it for CP-CP sessions, unless the bind flows as the result of link activation. The adjacent node will only allow itself to start CP-CP sessions, not another node.

IST1112I

This message is issued in response to a VARY ACT,ID=*cpname* command when an attempt is made to establish a CP-CP sessions for an end node (EN) that already has a CP-CP session with a network node (NN). An EN can have a CP-CP session with only one NN at a time.

current_NN is the name of the NN with which VTAM currently has a CP-CP session.

IST1113I

This message is issued in response to a VARY ACT,ID=*cpname* command when an EN-EN session was attempted. CP-CP sessions between ENs are not permitted.

IST1119I

IST1110I

This message is issued in response to a VARY ACT,ID=*cpname*,IDTYPE=CP command. VTAM could not allocate storage for internal signals needed to establish CP-CP sessions.

IST1246I

This message is issued at an end node when a network node attempts to establish CP-CP sessions and the network node cannot be used as a network node server according to the contents of the network node server list.

IST1247I

This message is issued in response to a VARY ACT,ID=*cpname*,IDTYPE=CP command. VTAM at an end node attempted to establish a CP-CP session with the network node specified on the command, but all attempts were unsuccessful.

IST1280I

This message is issued when the CP-CP session activation failed for one of the following reasons:

– An unrecoverable error occurred during session activation.

– An error occurred during contention winner session activation, and the error remained after the maximum number of retries was attempted.

This message might be preceded by IST1356I. See the explanation of IST1356I that follows for more information.

sessiontype is either **CONWINNER** (contention winner) or **CONLOSER** (contention loser).

code is the sense code associated with the error. See the *z/OS Communications Server: IP and SNA Codes* for a description of *code*.

IST1356I

This message is issued at an end node when that end node has attempted to activate a CP-CP session with network node *cpname* and the following is true:

The end node's network node server list specifies that *cpname* must provide SLU-initiated session capability as one of the requirements of becoming its network node server. However, *cpname* has informed the end node that it does not support SLU-initiated sessions.

IST1507I

This message is issued when an attempt has been made to establish a CP-CP session over a virtual route-based transmission group (VR-based TG) and the adjacent SSCP does not support the VR-based TG function. This may be because the adjacent SSCP has coded VRTG=NO in the CDRM major node for the SSCP that is attempting the VR-based TG connection or the adjacent SSCP may be pre-VTAM V4R2, which does not support the VR-based TG function.

IST1508I

This message is issued when an attempt has been made to establish a CP-CP session over a virtual route-based transmission group (VR-based TG) and the adjacent SSCP supports the VR-based TG function but does not allow CP-CP sessions to use the VR-based TG. The adjacent node has specified VRTGCPCP=NO as a start option or the start option has been modified with the MODIFY VTAMOPTS command.

IST1676I

This message is issued when this end node has attempted but failed to switch CP-CP sessions from its current network node server to its preferred network node server.

code is the code associated with the failure:

4—There is no active CP-capable link to the preferred server.

8—Refer to the sense code in message IST1280I to determine the reason for the failure.

12—The switch to the preferred network node server specified by the MODIFY VTAMOPTS,NNSPREF command currently being processed has been terminated because a later MODIFY VTAMOPTS,NNSPREF command has superseded it.

16—The switch of CP-CP sessions to the adjacent CP specified on the NNSPREF start option failed because the adjacent CP is actually an end node. CP-CP sessions between adjacent end nodes (EN) are not allowed.

IST1765I

This message is a header message for the information displayed in IST1766I.

IST1766I

One IST1766I will be issued for the network node displayed in the IST1112I message.

adjacent_cp is the network-qualified CP name of the adjacent control point.

cw_state is the status of the contention winner CP-CP session. Valid values are:

ACT active

INACT inactive

PACT pending active

PINACT pending inactive

cl_state is the status of the contention loser CP-CP session. Valid values are:

ACT active

INACT inactive

PACT pending active

PINACT pending inactive

state is the state of the CP-CP sessions to the adjacent node being displayed. Valid values are:

UP One or more of the contention winner and contention loser sessions are active or pending-active.

DOWN Both contention winner and contention loser sessions are coming down but are not completely inactive.

BOTH DOWN Both contention winner and contention loser sessions are inactive.

node is the APPN node type of the adjacent control point. The only valid value for this message group is NN (network node).

address is the hexadecimal storage address for the adjacent node control block where the CP-CP session information is saved.

System Action: Processing continues.

Operator Response:

IST1002I
Save the system log for problem determination.

IST1111I
Deactivate the link with the adjacent node which supports CP-CP sessions and then reactivate it. This will allow the other node to start the bind processing. This may cause CP-CP sessions to be activated.

IST1112I, IST1765I, and IST1766I
This CP is an EN. Verify that the EN has a CP-CP session established with the correct NN.

IST1113I
None.

IST1119I
Enter the DISPLAY BFRUSE command to display information about the common service area (CSA). Total VTAM private storage information is also displayed in message IST981I. Enter the DISPLAY STORUSE command to display storage usage for storage pools. Save the system log and request a dump for problem determination.

IST1246I
Enter the VARY ACT,ID=*cpname* command and specify the desired server. VTAM will attempt to establish a CP-CP session with *cpname* even if *cpname* is not allowed by the current network node server list.

The network node server list should be modified. If the network node server list is left unchanged, then VTAM may not be able to acquire a new server if the current server fails. After the list has been modified, issue a VARY ACT,ID=*member_name* command where *member_name* is the member in the definition library that contains the edited network node server list.

IST1247I

You should determine that the adjacent nodes are working properly and check for any connection problems between the nodes.

Then enter the VARY ACT,ID=*cpname* command and specify the desired server.

The network node server list should be modified to allow more network nodes to act as servers. After the list has been modified, issue a VARY ACT,ID=*member_name* command where *member_name* is the member in the definition library that contains the edited network node server list.

IST1280I

Save the system log for problem determination.

IST1356I

Save the system log for problem determination.

IST1507I

The command that initiated CDRM-CDRM session activation implicity or explicitly attempted activation of a CP-CP session over the virtual route used by the CDRM-CDRM session.

If the VR-based TG is not desired, no response is necessary. However, explicitly specifying VRTG=NO on the V ACT,ID=*cdrm name* command prevents VTAM from attempting VR-based TG activation.

If the CP-CP session is desired, this message indicates that the adjacent SSCP is not capable of performing the VR-based TG function. Save the system log for problem determination.

IST1508I

The command that initiated CDRM-CDRM session activation implicity or explicity attempted activation of a CP-CP session over the virtual route used by the CDRM-CDRM session.

If the CP-CP session is not desired, no response is necessary. However, explicity specifying VRTGCPCP=NO on the V ACT,ID=*cdrm name* command prevents VTAM from attempting CP-CP session activation.

If the CP-CP session is desired, this message indicates that the adjacent SSCP does not allow CP-CP sessions over VR-based TGs. Save the system log for problem determination.

IST1676I

Operator response is determined by the error code:

4 Activate a CP-capable link from the EN to the preferred network node server.

8 Save the console output and contact system programmer to determine causes for failure of CP-CP session activation attempt.

12 No action is necessary.

16 Contact the system programmer to help determine the correct value for the NNSPREF start option.

Programmer Response:

IST1002I

Use the explanations of *rcpri* and *rcsec* to assist you in solving the problem.

IST1111I, IST1112I, IST1113I,IST1765I, and IST1766I

None.

IST1119I

Increase storage as required. You might want to redefine your CSA start options using the MODIFY VTAMOPTS command. After the storage shortage problem is corrected, enter a VARY ACT,ID=*cpname* command and specify the desired server.

See the *z/OS Communications Server: SNA Operation* for more information about the DISPLAY BFRUSE Command, the DISPLAY STORUSE Command, and the MODIFY VTAMOPTS Command.

See the *z/OS Communications Server: SNA Diagnosis Vol 2, FFST Dumps and the VIT* for information about analyzing dumps and about analyzing storage using the VIT analysis tool.

IST1246I and IST1247I

Additional network nodes can be defined as acceptable servers by modifying the network node server list. Add new NETSRVR definition statements for individual network nodes or add a NETSRVR definition statement that allows any known network node to act as the network node server.

For information on the NETSRVR definition statement, see the *z/OS Communications Server: SNA Resource Definition Reference*

IST1280I
Use the explanation of the sense code to assist you in solving the problem.

IST1356I
The network node server list must be modified. Specify SLUINIT=OPT on the NETSRVR definition statement for either the network node server entry for *cpname* or the nameless entry.

Ask the operator to reactivate the modified network node server list before trying to activate the session again.

IST1507I
If CP-CP sessions are desired or required using virtual route-based transmission groups (VR-based TGs), both SSCPs must allow the function by having VRTG=YES coded on the CDRM statement in the CDRM major node for the adjacent SSCP.

IST1508I
If CP-CP sessions are desired using virtual route-based transmission groups (VR-based TGs), both SSCPs must allow the function by specifying VRTG=YES on the CDRM definition statement in the CDRM major node for the adjacent SSCP. In addition, VRTGCPCP=YES must be specified in both hosts as the start option value or modified with the MODIFY VTAMOPTS command to allow CP-CP sessions to use a VR-based TG.

IST1676I
If the switchover fails with reason code 8, determine reason for failure from sense code displayed in message IST1280I.

IST1111I ADJACENT NODE DOES NOT SUPPORT UNSOLICITED BINDS

Explanation: VTAM issues this message as part of a group of messages. The first message in the group is IST1110I. See the explanation of that message for a complete description.

IST1112I CP ALREADY HAS A CP-CP SESSION WITH *current_NN*

Explanation: VTAM issues this message as part of a group of messages. The first message in the group is IST1110I. See the explanation of that message for a complete description.

IST1113I EN-EN SESSION IS NOT VALID

Explanation: VTAM issues this message as part of a group of messages. The first message in the group is IST1110I. See the explanation of that message for a complete description.

IST1114I *option* **START OPTION IGNORED – NOT VALID FOR** *value*

Explanation: VTAM issues this message when *option* is not valid for the specified *value*.

option is the start option that is ignored.

value is one of the following:

- A specified node type that is not valid for *option*
- A specified start option and its value that conflict with *option*.

System Action: *option* is ignored. Other processing continues.

Operator Response: Save the system log for problem determination.

Programmer Response: Examine the VTAM start options contained in ATCSTR*xx* and verify that the correct options are specified. See the *z/OS Communications Server: SNA Resource Definition Reference* for more information on VTAM start options.

IST1115I CDRM NAME *cdrmname* IS DIFFERENT THAN SSCPNAME START OPTION

Explanation: This message is the first in a subgroup of messages that VTAM issues in response to an attempt to activate the host cross-domain resource manager (CDRM) major node with a name different than the host system services control point (SSCP) name specified in the start options.

A complete description of the message subgroup follows.

```
IST1115I  CDRM NAME cdrmname IS DIFFERENT THAN SSCPNAME START OPTION
IST1116I  SSCP NAME sscpname IS USED
```

IST1115I

cdrmname is the name specified in the CDRM major node definition.

IST1116I

sscpname is the name specified on the SSCPNAME start option.

System Action: The name specified for the host CDRM major node is ignored, and the SSCP name is used for the host CDRM name.

Operator Response: Save the system log for problem determination.

Programmer Response: Change either the name in the host CDRM definition or the SSCP name specified in the START options so that the names match. If the START option is changed, VTAM must be restarted. If the name in the host CDRM definition is changed, you must deactivate and reactivate the major node to use the new definition.

IST1116I SSCP NAME *sscpname* IS USED

Explanation: VTAM issues this message as part of a subgroup of messages. The first message in the subgroup is IST1115I. See the explanation of that message for a complete description.

IST1117I PHYSICAL RESOURCE (PHYSRSC) *puname* {IS NOT KNOWN|IS NOT A PU}

Explanation: VTAM issues this message as part of a group of messages. The first message in this group is IST1079I. See the explanation of that message for a complete description.

IST1118I LINK DEFINITION FAILURE, CP = *cpname* TGN = *tgn*

Explanation: This message is the first in a group of messages that VTAM issues when an attempt to define the link to topology and routing services failed. The second message in the group gives the reason for the failure. Possible message groups follow.

```
IST1118I  LINK DEFINITION FAILURE, CP = cpname TGN = tgn
IST1119I  FAILURE REASON IS INSUFFICIENT STORAGE
IST314I   END

IST1118I  LINK DEFINITION FAILURE, CP = cpname TGN = tgn
IST1261I  ABEND OCCURRED DURING LINK DEFINITION
IST314I   END
```

IST1118I

cpname is the name of the control point to which this link is attached. If *cpname* is session-capable, VTAM issues *cpname* as a network-qualified name in the form *netid.name*.

tgn is the transmission group number associated with this link.

IST1119I

There was not enough storage to define the link to topology and routing services.

IST1261I

An abend occurred before the link was defined to topology and routing services.

System Action: No sessions will be assigned to the link. Other processing continues.

Operator Response:

1. Enter the DISPLAY ADJCP,ID=*cpname*,E command and use the information displayed in messages IST1105I and IST1106I to identify the PU associated with the link specified by *cpname* and *tgn*.
2. Enter the VARY INACT command to deactivate the link. The link must be deactivated before another attempt at link definition is made. When the VARY INACT command has completed, enter a VARY ACT command to activate the link.
3. If VTAM continues to issue this message group, refer to the operator response for the second message.

IST1119I

Enter the DISPLAY STORUSE command to display storage usage for storage pools. Message IST981I displays total VTAM private storage information. If this message does not appear in the display, you may need to reissue the DISPLAY STORUSE command, specifying a higher value for the NUM operand. See the *z/OS Communications Server: SNA Operation* for additional information.

Save the system log and dump for problem determination.

IST1261I

Save the system log for problem determination.

Programmer Response:

IST1119I

Increase storage as required.

IST1261I

Review the contents of the system dump to determine the correct problem determination action.

IST1119I FAILURE REASON IS INSUFFICIENT STORAGE

Explanation: VTAM issues this message as part of several different message groups. See the explanation of the first message in the group for a complete description.

IST1120I *macroname* **APPNCOS DEFINITION FAILED–INSUFFICIENT STORAGE**

Explanation: VTAM issues this message in response to an APPN class-of-service (COS) definition failure. The definition statement failed because there was not enough private storage to process the request.

macroname is the name of the class of service being defined in the definition statement.

System Action: Processing continues.

Operator Response: Enter the DISPLAY STORUSE command to display storage usage for storage pools. Message IST981I displays total VTAM private storage information. If this message does not appear in the display, you may need to reissue the DISPLAY STORUSE command, specifying a higher value for the NUM operand. See the *z/OS Communications Server: SNA Operation* for additional information.

Save the system log and request a dump for problem determination.

Programmer Response: Increase storage as required.

See *z/OS Communications Server: SNA Operation* for more information on the DISPLAY BFRUSE and DISPLAY STORUSE commands. The *z/OS Communications Server: SNA Diagnosis Vol 1, Techniques and Procedures* provides additional information.

See the *z/OS Communications Server: SNA Diagnosis Vol 2, FFST Dumps and the VIT* for information about analyzing dumps and about analyzing storage using the VIT analysis tool, if external trace is active.

IST1121I COSAPPN IN *library errortype* **— PROCESSING CONTINUES**

Explanation: VTAM issues this message when the library member **COSAPPN** was empty, not found, or contained a syntax error.

library is the data definition name (DDNAME) specified for the definition library.

errortype indicates the type of error and can be **IS EMPTY**, **NOT FOUND**, or **IN ERROR** (contains a syntax error).

IST1122I

System Action: VTAM initialization continues. However, the IBM-supplied classes of service may not be available for APPN route selection.

Operator Response: If the APPN classes of service have been defined under a different member name and are activated by configuration list processing or by a VARY ACT command, then no action is necessary.

Otherwise, save the system log for problem determination.

Programmer Response:

- If **IS EMPTY** or **NOT FOUND** is displayed, verify that COSAPPN was either intentionally left empty or not found.
- If **IN ERROR** is displayed, see the *z/OS Communications Server: SNA Resource Definition Reference* for additional information.

Note: If an alternate set of appropriate classes of service is not defined through another configuration file specified in the start options, attempting to activate APPN sessions will yield unpredictable results.

IST1122I CHKPT TO DATASET *datasetname* **WAS NOT SUCCESSFUL, CODE =** *code*

Explanation: VTAM issues this message in response to one of the following commands:

- MODIFY CHKPT
- MODIFY CHKPT,ALL
- MODIFY CHKPT,DIR
- MODIFY CHKPT,TOPO
- Z NET
- Z NET,QUICK

This message confirms that VTAM was unable to write either the APPN directory database or the APPN topology database to the specified *datasetname*.

code indicates the reason for the error and is one of following:

Code	Error
1	Insufficient storage.
2	The disk file is undefined.
3	A MODIFY CHKPT command was attempted before the initial database load was complete.
4	Disk I/O errors occurred. These errors may be reported in a separate message(s) issued prior to this message.
5	A Z NET or Z NET,QUICK command may have been entered before the initial database load was complete. Or, the disk I/O subtask is unavailable due to a previous abend or initialization error and termination processing has begun.
6	The MODIFY CHKPT command was not entered at a network node.
7	The APPN directory contains no resources to checkpoint.
10	The topology and routing services task abended while attempting to process the MODIFY CHKPT command.

System Action: Processing continues.

Operator Response:

Code	Response
1	Enter the DISPLAY STORUSE command to display storage usage for storage pools. Message IST981I displays total VTAM private storage information. If this message does not appear in the display, you may need to reissue the DISPLAY STORUSE command, specifying a higher value for the NUM operand. See the *z/OS Communications Server: SNA Operation* for additional information. Save the system log and dump for problem determination.
2	Save the system log for problem determination.
3	If you entered a MODIFY CHKPT command, wait a short time and reenter the command.

4 Save the system log and dump for problem determination.

5 Regardless of how termination processing began, do not attempt another checkpoint. If you did not enter a termination command, save the system log and dump for problem determination.

6 VTAM ignores the MODIFY CHKPT command because it was not entered at a network node. Ensure that you are working with a network node and reenter the command.

7 None.

10 Save the system log and dump for problem determination.

Programmer Response:

Code	Response
1	Increase storage as required. See *z/OS Communications Server: SNA Operation* for more information on the DISPLAY BFRUSE and DISPLAY STORUSE commands. See the *z/OS Communications Server: SNA Diagnosis Vol 1, Techniques and Procedures* for additional information. See the *z/OS Communications Server: SNA Diagnosis Vol 2, FFST Dumps and the VIT* for information about analyzing dumps and about analyzing storage using the VIT analysis tool, if external trace is active.
2	You must define the missing disk file. See the applicable sequential access method documentation and the *z/OS Communications Server: SNA Network Implementation Guide* for additional information.
3	None.
4	See the applicable sequential access method documentation for more information.
5	Use the messages issued prior to this message to determine the cause of the failure. This message is only informing you that the directory services or topology routing services database was not written to *datasetname*. VTAM can continue without the disk I/O subtask, but the checkpoint function will not be available.
6	None.
7	None.
10	Review the contents of the system dump to determine the correct problem determination action. See the *z/OS Communications Server: SNA Diagnosis Vol 1, Techniques and Procedures* for information on the abend procedure.

IST1123I MODIFY CHKPT TO DATASET *datasetname* **WAS SUCCESSFUL**

Explanation: VTAM issues this message in response to any one of the following commands:

MODIFY CHKPT
MODIFY CHKPT, DIR
MODIFY CHKPT, ALL
MODIFY CHKPT, TOPO
Z NET
Z NET, QUICK

This message indicates that either directory services or topology and routing services has completed writing out its database to the specified *datasetname*.

System Action: Processing continues.

Operator Response: None.

Programmer Response: None.

IST1124I UNABLE TO REGISTER RESOURCES WITH *nodename*

Explanation: This message is the first in a group of messages that VTAM issues when VTAM at this end node is unable to register resources with its network node server.

nodename is the network-qualified name of the network node server control point in the form *netid.name*.

The second message in the group indicates the reason that the end node is unable to register resources and can be one of the following:

IST1125I END NODE IS NOT AUTHORIZED
The end node is unable to register resources because the end node is not authorized at the network node server.

IST1126I END NODE NETID REJECTED
The network node server rejected the network ID of the end node because the network node exceeded the maximum number of network IDs allowed.

IST1127I UNRECOGNIZED REGISTRATION REQUEST
The network node *nodename* has repeatedly reported that it is unable to interpret registration requests from this end node. This is due to one of the following software errors:

- The end node software is failing and sending incorrect requests.
- The network node software is failing and unable to recognize the requests from the end node.

System Action:

IST1125I or IST1126I
VTAM stops registering resources until CP-CP sessions with network node server *nodename* are deactivated. CP-CP sessions with this server or any other network node are then activated.

IST1127I
CP-CP sessions with *nodename* are deactivated. Either VTAM or the operator may activate CP-CP sessions with another network node and VTAM will resume resource registration.

Operator Response:

IST1125I or IST1126I
Save the system log for problem determination.

IST1127I
Enter the MODIFY TRACE,TYPE=BUF,ID=*nodename* command. Save the system log for problem determination.

Programmer Response:

IST1125I
If CP-CP sessions are desired between the end node and network node *nodename*, modify the network node server list to define the end node as authorized at that network node. If necessary, include a NETSRVR definition statement for the selected network node in the network node server list, or include a NETSRVR definition statement that allows any known network node to act as the network node server for the end node.

After the list has been edited, issue VARY ACT,ID=*member_name*, where *member_name* is the name of the definition list member that contains the edited network node server list. Then, enter the VARY TERM,ID=*nodename* command to deactivate CP-CP sessions between this end node and network node *nodename*. VTAM will automatically reactivate CP-CP sessions, using the new network node server list.

IST1126I
Select a network node server that can accommodate the network ID. If necessary, include a NETSRVR definition statement for the selected network node in the network node server list, or include a NETSRVR definition statement that allows any known network node to act as the network node server for the end node.

IST1127I
Examine the system log and trace output. Verify the REGISTR and DELETE GDS variables against the published formats.

- See *SNA Formats* or *SNA Network Product Formats* for a description of the REGISTR and DELETE GDS variables and an explanation of GDS variable formats.
- See the *z/OS Communications Server: SNA Diagnosis Vol 1, Techniques and Procedures* for more information about analyzing traces.

Alternatively, select a new network node to act as the server for this end node. If necessary, include a NETSRVR definition statement for the selected network node in the network node server list, or include a NETSRVR definition statement that allows any known network node to act as the network node server for the end node.

After the list has been modified, issue VARY ACT,ID=*member_name*, where *member_name* is the name of the definition list member that contains the edited network node server list.

IST1125I END NODE IS NOT AUTHORIZED

Explanation: VTAM issues this message as part of a group of messages when VTAM at this end node is unable to register resources with its network node server. The first message in the group is IST1124I. See the explanation of that message for a complete description.

IST1126I END NODE NETID REJECTED

Explanation: VTAM issues this message as part of a group of messages when VTAM at this end node is unable to register resources with its network node server. The first message in the group is IST1124I. See the explanation of that message for a complete description.

IST1127I UNRECOGNIZED REGISTRATION REQUEST

Explanation: VTAM issues this message as part of a group of messages when VTAM at this end node is unable to register resources with its network node server. The first message in the group is IST1124I. See the explanation of that message for a complete description.

IST1128I PATH *pathname* **IGNORED,** *nodename* **– STORAGE SHORTAGE**

Explanation: This message is the first in a group of messages that VTAM issues when sufficient storage is not available to update the dynamic path update set *pathname* for node *nodename*. A complete description of the message group follows.

```
IST1128I  PATH pathname IGNORED, nodename – STORAGE SHORTAGE
IST1045I  NODE TYPE = nodetype
IST314I   END
```

VTAM issues *nodename* as a network-qualified name in the form *netid.name*.

nodetype is the resource type of *nodename*. See Chapter 15, “Node and ID types in VTAM messages” on page 697 for possible values.

System Action: VTAM does not update the dynamic path update set *pathname*.

Operator Response: Wait a short time and reenter the command. If VTAM continues to issue this message, enter the DISPLAY BFRUSE command. Enter the DISPLAY STORUSE command to display storage usage for storage pools. Save the system log and dump for problem determination.

For a VTAM internal trace, enter a MODIFY TRACE command, specifying a smaller buffer size.

Programmer Response: Verify that the operator entered the buffer pool or CSA start options as specified in the start procedures.

Increase storage as required. For insufficient storage errors, you might want to redefine your buffer pool or CSA limits. If the start option cannot be modified using the MODIFY VTAMOPTS command, you must modify the VTAM start options file (ATCSTRxx) and restart VTAM to use the start option.

- See the *z/OS Communications Server: SNA Migration* to determine the storage requirements for VTAM.
- See the *z/OS Communications Server: SNA Resource Definition Reference* for a description of VTAM start options.
- See the *z/OS Communications Server: SNA Operation* for information about the DISPLAY BFRUSE Command, the DISPLAY STORUSE Command, and the MODIFY VTAMOPTS Command.
- See the *z/OS Communications Server: SNA Network Implementation Guide* for an explanation and description of buffer pools and for general information on buffer pool specification and allocation.
- See the *z/OS Communications Server: SNA Diagnosis Vol 2, FFST Dumps and the VIT* for information about analyzing dumps and about analyzing storage using the VIT analysis tool, if external trace is active.

IST1129I *command* **FAILED,** *nodename* **– DEACTIVATE PENDING**

Explanation: This message is the first in a group of messages that VTAM issues when the resource *nodename* that the operator specified on *command* has a deactivation request pending. A complete description of the message group follows.

```
IST1129I  command FAILED, nodename – DEACTIVATE PENDING
IST1045I  NODE TYPE = nodetype
IST314I   END
```

If the *command* that failed was a VARY INACT command, the pending deactivation is of a stronger type (Immediate or Force).

If a network-qualified name was entered on the command line, VTAM issues *nodename* in the form *netid.name*.

nodetype is the resource type of *nodename*. See Chapter 15, “Node and ID types in VTAM messages” on page 697 for possible values.

System Action: VTAM rejects the command. Other processing continues.

Operator Response: Monitor the progress of the deactivation by using the DISPLAY command. When *nodename* is deactivated, reenter the VARY command.

Programmer Response: None.

IST1130I *command* **FOR** *nodename* **FAILED – STORAGE SHORTAGE**

Explanation: This message is the first in a group of messages that VTAM issues when *command* for resource *nodename* failed because VTAM could not obtain enough storage to process the request. A complete description of the message group follows.

```
IST1130I  command FOR nodename FAILED – STORAGE SHORTAGE
IST1045I  NODE TYPE = nodetype
IST314I   END
```

If a network-qualified name was entered on the command line, VTAM issues *nodename* in the form *netid.name*.

nodetype is the resource type of *nodename*. See Chapter 15, “Node and ID types in VTAM messages” on page 697 for possible values.

System Action: VTAM rejects the command. Processing continues.

Operator Response: Messages IST561I, IST562I, IST563I, IST564I, IST565I or IST566I may be issued prior to this message to indicate the type of storage affected.

Enter the DISPLAY BFRUSE command to display storage used by VTAM buffer pools and information about the common service area (CSA). Total VTAM private storage information is also displayed in message IST981I. Enter the DISPLAY STORUSE command to display storage usage for storage pools.

Save the system log and request a dump for problem determination.

If *nodename* is an independent logical unit that is being converted to a definition for a resource in another domain, then the NCP major node for *nodename* must be deactivated. Activate the NCP major node when the storage shortage no longer exists.

Programmer Response: Verify that the operator entered the buffer pool or CSA start options as specified in the start procedures.

Increase storage as required. For insufficient storage errors, you might want to redefine your buffer pool or CSA limits. If the start option cannot be modified using the MODIFY VTAMOPTS command, you must modify the VTAM start options file (ATCSTRxx) and restart VTAM to use the start option.

- See the *z/OS Communications Server: SNA Resource Definition Reference* for a description of VTAM start options.
- See the *z/OS Communications Server: SNA Operation* for information about the DISPLAY BFRUSE Command, the DISPLAY STORUSE Command, and the MODIFY VTAMOPTS Command.
- See the *z/OS Communications Server: SNA Network Implementation Guide* for an explanation and description of buffer pools and for general information on buffer pool specification and allocation.

- See the *z/OS Communications Server: SNA Diagnosis Vol 2, FFST Dumps and the VIT* for information about analyzing dumps and about analyzing storage using the VIT analysis tool, if external trace is active.

IST1131I **DEVICE =** *devicetype* **[– CONTROLLING LU =** *luname***]**

Explanation: This message is part of a group of messages that VTAM issues in response to a DISPLAY ID command.

devicetype is the device type. If *devicetype* is **ILU/CDRSC**, the node is an independent LU that is represented by a CDRSC.

luname is the name of the controlling LU that was previously specified on the LOGAPPL operand of the definition statement or on the LOGON operand of the VARY LOGON command.

- If a network-qualified name was entered on the command line, VTAM issues *luname* in the form *netid.name*.
- If there is no controlling application program, VTAM does not display **CONTROLLING LU =** *luname*.

System Action: Processing continues.

Operator Response: None.

Programmer Response: None.

IST1132I *nodename* **IS ACTIVE, TYPE =** *nodetype*

Explanation: VTAM issues this message when *nodename* has been successfully activated in response to a VARY command.

If a network-qualified name was entered on the command line, VTAM issues *nodename* in the form *netid.name*.

nodetype is the type of node that is displayed. See Chapter 15, “Node and ID types in VTAM messages” on page 697 for a description of *nodetype*.

Note: If you are expecting this message to confirm activation of a resource and it is not issued, this can occur if the VARY command was overridden by other VTAM processing.

For example, if an NCP INOPs prior to completion of a VARY ACT command and recovery is attempted, then VTAM activates the resource rather than the operator command. In this situation, message IST493I or IST1141I would be displayed indicating that the VARY ACT command was overridden.

System Action: Processing continues.

Operator Response: None.

Programmer Response: None.

IST1133I *nodename* **IS NOW INACTIVE, TYPE =** *nodetype*

Explanation: VTAM issues this message when *nodename* has been successfully deactivated. In most cases, this is the result of a VARY INACT command. If *nodename* is a cross-domain resource manager (CDRM) in another domain, then deactivation could be the result of a deactivation request from the domain of *nodename*.

If a network-qualified name was entered on the command line, VTAM issues *nodename* in the form *netid.name*.

nodetype is the type of node that is displayed. See Chapter 15, “Node and ID types in VTAM messages” on page 697 for a description of *nodetype*.

System Action: Processing continues.

Operator Response: None.

Programmer Response: None.

IST1134I *nodename* **NOW HAS CONTROLLING LU** *luname*

Explanation: VTAM issues this message when processing of the LOGON operand of either a VARY ACT or VARY LOGON command has been completed.

When logical unit *nodename*, or the logical units associated with *nodename*, are not in session with another application program, VTAM will automatically log them on to application program *luname*. Resources must be active in order for the logon to complete. This does not mean that a session with the application program has been initiated.

If a network-qualified name was entered on the ID operand of the command, VTAM issues *nodename* in the form *netid.name*.

If a network-qualified name was entered on the LOGON operand of the command, VTAM issues *luname* in the form *netid.name*.

System Action: Processing continues.

Operator Response: None.

Programmer Response: None.

IST1135I **FORCED VARY INACT SCHEDULED FOR** *nodename*

Explanation: VTAM issues this message in response to a VARY INACT,TYPE=FORCE command to deactivate node *nodename*.

If a network-qualified name was entered on the command line, VTAM issues *nodename* in the form *netid.name*.

System Action: VTAM issues a VARY INACT command for node *nodename*.

Operator Response: None.

Programmer Response: None.

IST1136I **VARY INACT** *nodename* **SCHEDULED – UNRECOVERABLE ERROR**

Explanation: VTAM issues this message when a VARY INACT command for resource *nodename* has been scheduled because one of the following occurred:

- An unrecoverable error occurred in a communication controller, physical unit, logical unit, link, or link station.
- VTAM scheduled an internal VARY INACT,TYPE=FORCE command because the maximum RU size was exceeded on the SSCP-LU session or the SSCP-PU session.

VTAM issues *nodename* as a network-qualified name in the form *netid.name*.

System Action: VTAM automatically issues a VARY INACT command for resource *nodename*.

Operator Response: Save the system log for problem determination.

Programmer Response: Run your operating system service aid program, and contact IBM for service. See the *EREP User's Guide and Reference* for more information on using EREP.

IST1137I *command* **FAILED,** *nodename* **–** *reason*

Explanation: VTAM issues this message when the *command* failed for the specified *reason*.

If a network-qualified name was entered on the command line, VTAM issues *nodename* in the form *netid.name*.

reason indicates the cause of the failure and can be one of the following:

ALSNAME NOT GIVEN
A MODIFY TRACE,TYPE=GPT command was entered for *nodename*. No ALSNAME was specified, and a default ALSNAME could not be determined because of one of the following:

- The adjacent link station list for *nodename* contains no entries.
- The adjacent link station list for *nodename* contains two or more entries (other than ISTAPNPU).

ALSNAME NOT VALID
A MODIFY TRACE,TYPE=GPT command was entered for *nodename*. The adjacent link station name (ALSNAME)

that was either specified or used by default was not in a valid state when the command was entered. If ISTAPNPU was used by default because it was the only entry in the adjacent link station list, then this is the reason the command failed. ISTAPNPU is the name of the generic APPN adjacent link station. A real adjacent link station name must be specified for the command to succeed.

CDRSC IS DYNAMIC
nodename is a dynamic cross-domain resource; this is not valid for the TRACE command you entered.

CDRSC NOT ACTIVE
Giveback processing or internal delete for node *nodename* failed. VTAM found a predefined CDRSC to be **not** active, and VTAM was not able to transfer the active sessions from the LU to the CDRSC.

CDRSC NOT ALLOCATED
Giveback processing or internal delete for node *nodename* failed. VTAM has insufficient resources to allocate a cross-domain resource or does not support a dynamic CDRSC and was not able to transfer the active sessions from the LU to a CDRSC.

DEACTIVATE PENDING
VTAM rejected a VARY INACT, TYPE=GIVEBACK or VARY REL, TYPE=GIVEBACK command because a logical unit subordinate to *nodename* has LU-LU sessions and is pending deactivation.

EXIT IS NOT FOUND
The operator entered a DISPLAY EXIT command for a VTAM installation-wide exit which could not be located.

INSTALL EXIT REJECT
The operator entered a MODIFY ENCR command for *nodename*, and VTAM rejected the MODIFY ENCR command because of user-written routines related to the GENKEY function.

INSTALL PROGRAM
A MODIFY ENCR command was entered for nodename and the cryptographic facility is not supported by this host.

ISTLSXCF NOT ACTIVE
Another node in the sysplex attempts to establish a connection with an XCF node, but the connection is not established because the dynamic local SNA major node, ISTLSXCF, is not in an active state.

ISTLSXCF NOT FOUND
Another node in the sysplex attempts to establish a connection with an XCF node, but the connection is not established because the dynamic local SNA major node, ISTLSXCF, does not exist.

ISTTRL NOT FOUND
Another node in the sysplex attempts to establish a connection with an XCF node, but the connection is not established because the TRL major node, ISTTRL, does not exist.

MACLNTH NOT VALID
The operator entered a MODIFY SECURITY command with a MACLNTH value that is not valid. The MACLNTH value is dependent on the most recent specification of MACTYPE. The MACTYPE value might have been specified on a MODIFY SECURITY command or on the APPL definition statement.

MACTYPE NOT VALID
The operator entered a MODIFY SECURITY command with a MACTYPE value that is not valid with the most recent specification of MACLNTH. The MACLNTH value might have been specified on a previous MODIFY SECURITY command or on the APPL definition statement.

MODEL LU NOT VALID
The operator entered a DISPLAY LUGROUPS command for *nodename*. Model LU *nodename* was not found in the LUGROUP specified on the GROUP operand of the DISPLAY LUGROUPS command.

MODULE LOAD FAILED
Attempt to load XCF modules fails.

MUST BE APPLICATION
The operator entered a MODIFY ENCR command or MODIFY SECURITY command for *nodename* for one of the following purposes:

- To set the encryption level to CONDITIONAL
- To set the values of MACLNTH or MACTYPE.

MACLNTH, MACTYPE, and the CONDITIONAL encryption level are valid only if *nodename* is an application program.

MUST BE MORE SECURE
The operator entered a MODIFY ENCR command or MODIFY SECURITY command for *nodename* to lower (make less secure) the level of cryptographic session for the logical unit or application program indicated by *nodename*. The level of cryptographic session for a logical unit or application program can only be raised (made more secure). For example, if you have defined an LU as *selective*, you cannot modify it to *optional*. You can modify it to *required*.

NODE KEY UNDEFINED
The operator entered a MODIFY ENCR command or a MODIFY SECURITY command for *nodename*, and the node *nodename* does not have a properly defined cryptographic key in the cryptographic key data set.

PROGRAM NOT ACTIVE
The Cryptographic Facility is not available to process a MODIFY ENCR command.

RESOURCE NOT VALID
The operator entered a MODIFY SECURITY command with the CKEY operand for *nodename*, but *nodename* is not a device type LU.

RESOURCES NOT FOUND
The operator entered a VARY ACQ or a VARY REL command, but it had no effect on the NCP.

Either all the resources were acquired or released already, or the OWNER specified on the command did not match any of the owner names specified on the NCP's resources. Two different networks cannot share the same native resources.

RTP PU NOT VALID
A VARY ACT command for an RTP PU is issued. This is a dynamic PU and activates automatically if RTP is supported. A VARY ACT of a RTP PU is invalid.

SECURITY DATA ERROR
VTAM detected a mismatch of the encrypted security data fields during the XID exchange. This mismatch may be caused by:

- An unauthorized subarea dial physical unit attempting to establish a connection over a switched line.
- The absence of the PRTCT operand
- Not having the correct password coded for both the caller and receiver
- One of the subarea nodes is of a level that does not support call security verification.

SECURITY ERROR
A security error occurred while VTAM was processing the command *command*.

STORAGE SHORTAGE
The operator entered a MODIFY ENCR command for *nodename* and the VTAM address space has insufficient storage.

SUPPORT UNAVAILABLE
The security manager is not available or the resource class APPCLU is not active.

SYSPLEX JOIN FAILED
VTAM is attempting to join the sysplex, but a nonzero return code is sent from MVS.

SYSPLEX UNAVAILABLE
VTAM is attempting to join the sysplex, but the sysplex is not active.

VTAM ABEND
One of the following occurred:

- VTAM abended while processing a MODIFY PROFILES command.
- VTAM abended while processing a MODIFY ENCR command for *nodename*. The error may be due to the improper cleanup of the cryptographic facility (that is, the operator cancelled the cryptographic facility via the CANCEL command).

XCF BUILD FAILED
A VARY ACT command fails for a dynamic local SNA major node.

XCF PU NOT FOUND
A D TRL,XCFCP=*cp_name* command was issued for *nodename*. The nodename is the CP name specified in the display command. The associated dynamic PU for that CP was not located.

XCF TRLE NOT FOUND
One of the following occurred:

- A D,TRL,XCFCP=*cpname* command was issued for *nodename*. The nodename is the CP name specified in the display command. The associated dynamic TRLE for that CP was not located.
- A V,NET,ACT,ID=ISTLSXCF command was issued. An XCF connection is in the process of being deactivated and an activation request is received. The dynamic TRLE which is required for activation does not exist.

System Action: The command is not completed. Processing continues.

CDRSC IS DYNAMIC or CDRSC NOT ALLOCATED
LU *nodename* remains known to VTAM in an inactive state with active sessions.

FUNCTION NOT OPERATIONAL
The command is not executed.

INSTALL PROGRAM
Install Cryptographic Facility.

SECURITY DATA ERROR
VTAM terminates the switched connection and deactivates the PU.

SECURITY ERROR or SUPPORT UNAVAILABLE
VTAM does not refresh the profiles and continues to use the profiles that are in storage.

Operator Response: The *reason* determines the response:

ALSNAME NOT GIVEN
Enter a DISPLAY ID command for *nodename* to determine the correct adjacent link station, and reenter the command.

ALSNAME NOT VALID
Enter a DISPLAY ID command for *nodename* to determine the correct adjacent link station, and reenter the command.

The state (active or inactive) of the PU with which the independent LU is associated must be as follows:

- Active if it has been dynamically reconfigured within the NCP
- Active if it is on an NCP switched line
- Active or inactive if it is on an NCP nonswitched line.

CDRSC IS DYNAMIC or CDRSC NOT ALLOCATED
Activate a CDRSC major node that defines a CDRSC with *nodename*.

DEACTIVATE PENDING
Wait until all subordinate nodes have completed deactivation and retry the command.

ISTLSXCF NOT ACTIVE
Enter a VARY,ACT,ID=ISTLSXCF to activate ISTLSXCF.

MACLNTH NOT VALID
Retry the command with a valid value for MACLNTH.

MACTYPE NOT VALID
Retry the command with a valid value for MACTYPE.

MODEL LU NOT VALID
Check that *nodename* is correct and retry the command. If problems persist, save the system log for problem determination.

PROGRAM NOT ACTIVE
Make sure the Cryptographic Facility is installed and operational.

RESOURCE NOT VALID
Check that *nodename* is correct and retry the command. If problems persist, save the system log for problem determination.

IST1137I

RESOURCES NOT FOUND
Verify that all of the NCP resources have been acquired or released or that the OWNER specified on the command matches the owner name specified on the resource(s) to be acted upon.

SECURITY DATA ERROR
Monitor the console for further occurrences of this message. If VTAM continues to issue this message, use the VARY ANS command to take the line out of answer mode.

SECURITY ERROR
Retry the command. If VTAM continues to issue this message, contact the security administrator. *

STORAGE SHORTAGE
If VTAM continues to issue this message, enter the DISPLAY BFRUSE command. Enter the DISPLAY STORUSE command to display storage usage for storage pools. Save the system log and request a dump for problem determination.

VTAM ABEND
Save the system log and dump for problem determination.

If the error was due to the improper cleanup of the cryptographic facility, enter the STOP command to stop the cryptographic facility, and save the system log for problem determination.

XCF PU NOT FOUND
Check the CP name specified on the parameter XCFCP to ensure it is correct and retry the command. Issue a DISPLAY TRL,CONTROL=XCF to determine if any XCF TRLEs exist. Issue a DISPLAY ID=ISTLSXCF to determine if an associated dynamic PU exists for the connection.

XCF TRLE NOT FOUND
Check the CP name specified on the parameter XCFCP to ensure it is correct and retry the command. Issue a DISPLAY TRL,CONTROL=XCF to determine if any XCF TRLEs exist.

All other *reason*s
Save the system log for problem determination.

Programmer Response: The *reason* determines the response:

CDRSC IS DYNAMIC
Reenter the TRACE command with a resource that is not a dynamic cross-domain resource. You cannot trace a dynamic cross-domain resource.

CDRSC NOT ALLOCATED
Take VTAM down, and restart it so that it supports dynamic CDRSCs.

EXIT IS NOT FOUND
Make sure the VTAM installation-wide exit that could not be found has been installed on your system.

INSTALL EXIT REJECT
GENKEY failed with RETURN CODE 16 from the common cryptographic architecture product (CCA) or the IBM Cryptographic Unit Support product (CUSP).

For further information, see the documentation for the cryptographic facility that you are using.

MODEL LU NOT VALID
Check the definition of *nodename* to ensure that it is correct.

MUST BE APPLICATION
Make sure *nodename* is the correct node name. If *nodename* is the correct name, see *z/OS Communications Server: SNA Operation* for more information on valid encryption levels. Otherwise, reenter the MODIFY ENCR command with the correct value for *nodename*.

MUST BE MORE SECURE
If you wish to lower the cryptographic session level of a node, you must redefine the system definition cryptographic option in SYS1.VTAMLST and reactivate the major node that contains *nodename*.

NODE KEY UNDEFINED
Define the cryptographic key for node *nodename* in the cryptographic key data set. For information about defining cryptographic keys, see the *z/OS ICSF System Programmer's Guide* and the *z/OS Communications Server: SNA Network Implementation Guide*.

SECURITY DATA ERROR
Verify that all nodes involved in the dial process are at a level that supports call security verification. The passwords used to verify the identity of the caller and the receiver must match. Refer to the PRTCT keyword on the PU statement in the switched major node definition.

STORAGE SHORTAGE
If this error occurs often, review the VTAM storage allocation. Increase storage as required.

- See the *z/OS Communications Server: SNA Migration* to determine the storage requirements for VTAM.
- See the *z/OS Communications Server: SNA Resource Definition Reference* for a description of VTAM start options.
- See the *z/OS Communications Server: SNA Operation* for information about the DISPLAY BFRUSE Command, the DISPLAY STORUSE Command, and the MODIFY VTAMOPTS Command.
- See the *z/OS Communications Server: SNA Network Implementation Guide* for an explanation and description of buffer pools and for general information on buffer pool specification and allocation.
- See the *z/OS Communications Server: SNA Diagnosis Vol 2, FFST Dumps and the VIT* for information about analyzing dumps and about analyzing storage using the VIT analysis tool, if external trace is active.

SYSPLEX JOIN FAILED
Trace the return code from MVS. Verify that the sysplex environment exists and restart VTAM.

VTAM ABEND
See the *z/OS Communications Server: SNA Diagnosis Vol 1, Techniques and Procedures* for information on the abend procedure. If you cannot determine the cause of the problem from the output provided or need additional assistance, contact the IBM software support center.

If the error was due to the improper cleanup of the cryptographic facility, start the cryptographic facility if it is not already started.

XCF BUILD FAILED
Restart VTAM with full XCF support.

XCF PU NOT FOUND
Verify that XCF support is active for this VTAM.

XCF TRLE NOT FOUND
Verify that XCF support is active for this VTAM.

For all other *reason*s, no further action is recommended.

IST1138I REQUIRED *resource* **[***luname***]** *reason*

Explanation: VTAM issues this message as part of a group of messages when a resource requests a session, and the session initiation request fails for one of the reasons listed below. The first message in the group is IST663I.

Message IST664I, which is part of the IST663I message group, shows the names of the partners for which a session could not be established.

The combination of *resource* and *reason* may be any of the following:
ADJSSCP TABLE
UNDEFINED
COS NAME *cosname*
UNDEFINED
LOGMODE NAME *logmode*
UNDEFINED
RESOURCE *luname*
UNDEFINED
RESOURCE *luname*
NOT ACTIVE
RESOURCE *luname*
UNSTABLE (device-type LUs only)
RESOURCE *luname*
DISABLED
RESOURCE *luname*
QUIESCING

IST1138I

RESOURCE *luname*
  BLOCKING LOGONS (for application PLUs only)
STORAGE
  NOT AVAILABLE

luname is displayed when *resource* is **RESOURCE**. *luname* is the real name of the LU or application that was in error. If the SLU is not known, ***NA*** is displayed for *luname*.

- If a network-qualified name was entered on the command line, VTAM issues *luname* as a network-qualified name in the form *netid.name*.
- If *luname* is the SLU, the resource is undefined, not active, disabled, or quiescing.
- If *luname* is the PLU, the resource is undefined, not active, disabled, quiescing, or blocking logons.
- For *cosname*, no COS (class-of-service) entry with that name has been defined. *cosname* is blank if the default class of service was used.
- For *logmode*, the logon mode is not valid for the SLU because:
  - The logon mode is not in the logon mode table for the SLU in the VTAM definition statements.
  - No logon mode table is associated with the SLU, and the logon mode is not included in the default logon mode table.
  - No valid logon mode table is associated with the SLU, and no default logon mode table exists.
- If *logmode* is not provided or contains blanks, IST264I is still issued. ***NA*** is displayed for *logmode*.

System Action: VTAM rejects the session initialization request. The session setup fails.

Operator Response: Follow the appropriate action:

- If the required resource is **UNDEFINED**, enter a VARY ACT command to activate the resource major node in which the resource is defined.
- If the required resource is **NOT ACTIVE**, enter a VARY ACT command to activate the resource. If the resource is an application program, start it.
- If the required resource is **UNSTABLE**, it may be going through some type of error recovery process. This can be due to ERP, an INOP, or session termination. Display the resource and retry the request after it has recovered.
- If the required resource is **DISABLED** and it is a device type LU, check to see if it is powered on.
- If the required resource is **DISABLED** and it is an application program, start the application program or ensure that the application has issued SETLOGON START.
- If the required resource is an application program and is **QUIESCING**, SETLOGON QUIESCE is in effect. The application program is shutting down and cannot accept new sessions unless VTAM closes and reopens the ACB.
- If the required resource is an application program, and the ACB was opened with MACRF=NLOGON, it is **BLOCKING LOGONS**. The only LU-LU sessions allowed for the application program are those initiated by the application program itself using OPNDST OPTCD=ACQUIRE.
- For a **LOGMODE** problem, verify that the resource specified the correct logon mode on the request. You can use the DISPLAY ID command to determine the table identified for the resource. You can use the MODIFY TABLE command to change the logon mode table name associated with a resource.
- If **STORAGE** is **NOT AVAILABLE**, wait a short time and reenter the command. If VTAM continues to issue this message, enter the DISPLAY BFRUSE command. Enter the DISPLAY STORUSE command to display storage usage for storage pools. Save the system log and dump for problem determination.

Programmer Response:

- For a **COS** problem, verify that you have defined the class of service.
- For a **LOGMODE** problem, either correct the logon mode table currently assigned to the SLU or assign a different logon mode table that does contain the correct mode.
- For a **STORAGE** problem, allocate more storage to the pageable system queue area (SQA). For insufficient storage errors, you might want to redefine your buffer pool or CSA limits. If the start option cannot be modified using the MODIFY VTAMOPTS command, you must modify the VTAM start options file (ATCSTRxx) and restart VTAM to use the start option.
  - See the *z/OS Communications Server: SNA Resource Definition Reference* for a description of VTAM start options.
  - See the *z/OS Communications Server: SNA Operation* for information about the DISPLAY BFRUSE Command, the DISPLAY STORUSE Command, and the MODIFY VTAMOPTS Command.

IST1139I *runame* **FOR** *nodename* **FAILED – SENSE:** *code*

Explanation: This message is the first in a group of messages that VTAM issues when the request *runame* for node *nodename* failed with sense code *code*. A complete description of the message group follows.

```
IST1139I  runame FOR nodename FAILED – SENSE: code
IST1045I  NODE TYPE = nodetype
IST314I   END
```

IST1139I

runame is the request that was entered for *nodename*. See Chapter 14, "Command and RU types in VTAM messages" on page 685 for a description of *runame*.

If the network where the resource resides is known to VTAM, *nodename* is issued as a network-qualified name in the form *netid.name*.

code is the sense code and indicates the reason for the error. See the *z/OS Communications Server: IP and SNA Codes* for a description of *code*.

IST1045I

nodetype is the resource type of *nodename*. See Chapter 15, "Node and ID types in VTAM messages" on page 697 for possible values.

System Action: VTAM does not perform the request *runame*.

When VTAM receives a failing activation request for RUs such as ACTLINK, CONTACT, ACTLU, or ACTPU, VTAM usually deactivates the resource and all subordinate resources, regardless of whether the resource was being activated or deactivated.

Operator Response:

- Attempt to activate or trace the node again.
- If a failure still occurs, save the system log for problem determination.
- If VTAM issues this message repeatedly, disable the line. Save the system log for problem determination.
- If *code* indicates a storage problem, wait a short time and reenter the command. If VTAM continues to issue this message, enter the DISPLAY BFRUSE command to display storage used by VTAM buffer pools and information about the common service area (CSA). Message IST981I displays total VTAM private storage information. Enter the DISPLAY STORUSE command to display storage usage for storage pools.

  Save the system log and request a dump for problem determination.
- **Sense Code 081C***nnnn*

  Correct the cause indicated by the user portion of the sense code (*nnnn*), and retry the command.

Programmer Response:

- If *code* indicates a storage problem, increase storage as required. For insufficient storage errors, you might want to redefine your buffer pool or CSA start options. If the start option cannot be modified using the MODIFY VTAMOPTS command, you must modify the VTAM start options file (ATCSTRxx) and restart VTAM to use the start option.
  - See the *z/OS Communications Server: SNA Migration* to determine the storage requirements for VTAM.
  - See the *z/OS Communications Server: SNA Resource Definition Reference* for a description of VTAM start options.
  - See the *z/OS Communications Server: SNA Operation* for information about the DISPLAY BFRUSE Command, the DISPLAY STORUSE Command, and the MODIFY VTAMOPTS Command.
  - See the *z/OS Communications Server: SNA Network Implementation Guide* for an explanation and description of buffer pools and for general information on buffer pool specification and allocation.
  - See the *z/OS Communications Server: SNA Diagnosis Vol 2, FFST Dumps and the VIT* for information about analyzing dumps and about analyzing storage using the VIT analysis tool, if external trace is active.
- **Sense Code 081C***nnnn*

  If an ACTLINK request failed on a VARY ACT request with the sense code of **081C***nnnn*, check the CUADDR operand of the PU (local SNA) or PCCU definition statement to make sure that the correct channel unit address (CUA) was specified for the node *nodename*.

  If sense code 081C0010 is received and message IST1386I is issued, refer to the return code and reason code in IST1386I to determine the cause of the failure.

- **Sense Code 08A30001**

  If VTAM issues sense code 08A30001 repeatedly, determine the subarea node that is attempting to establish a switched connection. If the SSCP is authorized to request that connection, verify that both SSCPs have identical PRTCT operands coded for their PU statements on the switched major nodes. Also verify that both nodes and their SSCPs are of a level that supports call security verification.

  VTAM might issue this message with sense code 08A30001 because an unauthorized subarea node is attempting to establish a switched connection to the host that received the message.
- You might need to include the LUDRPOOL macro in the NCP generation.
- Make sure that the device is available to the system and that there are no hardware problems.

IST1140I *command* **FAILED** *nodename* **– STATE** *state* **NOT VALID**

Explanation: This message is the first in a group of messages that VTAM issues when the *command* is rejected because the resource *nodename* was not in a state that is valid for the request. A complete description of the message group follows.

```
IST1140I  command FAILED nodename – STATE state NOT VALID
IST1045I  NODE TYPE = nodetype
IST314I   END
```

IST1140I

See Chapter 14, “Command and RU types in VTAM messages” on page 685 for a description of *command*.

If a network-qualified name was entered on the command line, VTAM issues *nodename* in the form *netid.name*.

state is the status of *nodename* at the time of the request. See the *z/OS Communications Server: IP and SNA Codes* for a description of *state*.

IST1045I

nodetype is the resource type of *nodename*. See Chapter 15, “Node and ID types in VTAM messages” on page 697 for possible values.

System Action: VTAM rejects the command.

Operator Response: Use the DISPLAY ID command to monitor the progress of the node. When processing is completed, enter the commands required to obtain the network configuration or device state required.

Programmer Response: Check the system log to determine the series of events that caused the problem.

IST1141I *command1* **FOR** *nodename* **OVERRIDDEN BY** *command2*

Explanation: VTAM issues this message when *command2* overrides *command1*, even though *command1* was entered first.

VTAM may have issued *command2* when it could not complete *command1*. For example:

- A VARY INACT,TYPE=IMMED command for a physical unit causes VTAM to reject a VARY REL command for the same device. The VARY INACT,TYPE=IMMED command is processed, and the VARY REL command is not executed, because the release processing is part of the deactivation processing.

See Chapter 14, “Command and RU types in VTAM messages” on page 685 for a description of *command1* and *command2*.

If a network-qualified name was entered on the command line, VTAM issues *nodename* in the form *netid.name*.

System Action: VTAM rejects *command1*. Processing of *command2* continues.

Operator Response: VTAM cannot process *command1* and *command2* concurrently. *command1* is always rejected. Check the system log to determine the reason for the sequence in which the two commands were entered.

Programmer Response: None.

IST1142I TRACE REQUEST FAILED – *nodename* NOT VALID

Explanation: This message is the first in a group of messages that VTAM issues in response to a MODIFY TRACE command or TRACE start option. The trace for resource *nodename* failed because:

- *nodename* does not exist.
- *nodename* is not valid for the type of trace requested.
- if SCOPE=ALL was specified, no subnodes of the resource nodename were found which were valid for the type of trace requested.

A complete description of the message group follows.

```
IST1142I  TRACE REQUEST FAILED – nodename NOT VALID
IST1045I  NODE TYPE = nodetype
IST314I   END
```

If a network-qualified name was entered on the command line or start option, VTAM issues *nodename* in the form *netid.name*.

nodetype is the resource type of *nodename*. See Chapter 15, “Node and ID types in VTAM messages” on page 697 for possible values.

System Action: VTAM rejects the command.

Operator Response: Ensure that you entered *nodename* correctly. If problems persist, verify that *nodename* is valid for the type of trace requested or, if SCOPE=ALL was specified, verify that at least one subnode exists that is valid for the type of trace requested, or if SCOPE=ALL was specified, verify that at least one subnode exists that is valid for the type of trace requested.

For more information on the MODIFY TRACE command or TRACE start option, see *z/OS Communications Server: SNA Operation*.

Programmer Response: None.

IST1143I TRACE TERMINATED FOR *nodename* [ALSNAME = *alsname*]

Explanation: This message is the first in a group of messages that VTAM issues in response to a MODIFY NOTRACE command when the trace activity on resource *nodename* has stopped. A complete description of the message group follows.

```
IST1143I  TRACE TERMINATED FOR nodename [ALSNAME = alsname]
IST1045I  NODE TYPE = nodetype
IST314I   END
```

If a network-qualified name was entered on the command line, VTAM issues *nodename* in the form *netid.name*.

alsname is the name of the adjacent link station (ALS) over which the LU is traced. *alsname* is displayed if the traced node is an independent LU.

nodetype is the resource type of *nodename*. See Chapter 15, “Node and ID types in VTAM messages” on page 697 for possible values.

System Action: VTAM stops tracing *nodename*. Processing continues.

Note: If MODIFY NOTRACE is entered with the SCOPE=ALL operand, VTAM also stops all traces on subordinate nodes to *nodename*.

Operator Response: None.

Programmer Response: None.

IST1144I TRACE INITIATED FOR *nodename* [ALSNAME = *alsname*]

Explanation: This message is the first in a group of messages that VTAM issues in response to a MODIFY TRACE command when trace activity for the node *nodename* has successfully started. A complete description of the message group follows.

```
IST1144I  TRACE INITIATED FOR nodename [ALSNAME = alsname]
IST1045I  NODE TYPE = nodetype
IST314I   END
```

If a network-qualified name was entered on the command line, VTAM issues *nodename* in the form *netid.name*.

alsname is the name of the adjacent link station (ALS) over which the LU is traced. *alsname* is displayed if the traced node is an independent LU.

nodetype is the resource type of *nodename*. See Chapter 15, “Node and ID types in VTAM messages” on page 697 for possible values.

System Action: VTAM starts tracing *nodename*.

Note: If you coded the SCOPE=ALL operand on the MODIFY TRACE command, VTAM initiates traces on all subordinate nodes as well.

Operator Response: None.

Programmer Response: None.

IST1145I TRACE REQUEST FAILED, *nodename* – STORAGE SHORTAGE

Explanation: This message is the first in a group of messages that VTAM issues when a MODIFY TRACE command, MODIFY NOTRACE command, TRACE start option, or NOTRACE start option is entered to activate or deactivate a VTAM trace for resource *nodename*, but sufficient storage is not available to build a parameter list. A complete description of the message group follows.

```
IST1145I  TRACE REQUEST FAILED, nodename – STORAGE SHORTAGE
IST1045I  NODE TYPE = nodetype
IST314I   END
```

If a network-qualified name was entered on the command line or start option, VTAM issues *nodename* in the form *netid.name*.

nodetype is the resource type of *nodename*. See Chapter 15, “Node and ID types in VTAM messages” on page 697 for possible values.

System Action: VTAM rejects the command or start option. Processing continues.

Operator Response:

- If VTAM issues this message in response to a command, wait a few minutes, and reenter the command. If the error persists, enter a DISPLAY BFRUSE command. Enter the DISPLAY STORUSE command to display storage usage for storage pools. Save the system log and dump for problem determination.
- If VTAM issues this message during startup, wait until VTAM is initialized, and enter a DISPLAY BFRUSE command. Save the system log and dump for problem determination.

Programmer Response: Verify that the operator entered the buffer pool or CSA start options as specified in the start procedures.

Increase storage as required. For insufficient storage errors, you might want to redefine your buffer pool or CSA start options. If the start option cannot be modified using the MODIFY VTAMOPTS command, you must modify the VTAM start options file (ATCSTRxx) and restart VTAM to use the start option.

- See the *z/OS Communications Server: SNA Migration* to determine the storage requirements for VTAM.
- See the *z/OS Communications Server: SNA Resource Definition Reference* for a description of VTAM start options.
- See the *z/OS Communications Server: SNA Operation* for information about the DISPLAY BFRUSE Command, the DISPLAY STORUSE Command, and the MODIFY VTAMOPTS Command.

- See the *z/OS Communications Server: SNA Network Implementation Guide* for an explanation and description of buffer pools and for general information on buffer pool specification and allocation.
- See the *z/OS Communications Server: SNA Diagnosis Vol 2, FFST Dumps and the VIT* for information about analyzing dumps and about analyzing storage using the VIT analysis tool, if external trace is active.

IST1146I *nodename command* **U =** *operand* **FAILED**

Explanation: VTAM issues this message when *command* failed for *nodename* because an unacceptable *operand* was entered.

- If *operand* is b (blank), a line in a channel attachment major node or a local SNA PU was defined without a channel unit address, and the channel unit address was not specified with the **U** operand on the VARY ACT command.
- If *operand* is *cua*, a VARY ACT command specifying **U=***cua* was entered for a line in a channel attached major node or a local SNA PU that was not active. This error occurs when *cua* does not match the channel unit address currently in use.

If a network-qualified name was entered on the command line, VTAM issues *nodename* in the form *netid.name*.

System Action: VTAM rejects the command.

Operator Response:

If *operand* is (blank), reenter the VARY ACT command specifying the channel unit address on the U operand.

If *operand* is *cua*, and *cua* is the correct channel unit address, deactivate the line or PU and reenter the command.

Programmer Response:

If *operand* is (blank), you may want to specify a default channel unit address for the line or PU.

If *operand* is *cua*, no action is required.

IST1147I *nodename command* **LOGON=** *operand* **FAILED**

Explanation: VTAM issues this message in response to a **VARY ACT** or **VARY** LOGON command. *command* failed for *nodename* because an unacceptable *operand* was entered.

If *operand* is a controlling LU, a controlling LU name was specified on the **LOGON** operand of a VARY ACT command for an application. Controlling LUs are only valid for logical units.

If a network-qualified name was entered on the ID operand of the command, VTAM issues *nodename* in the form *netid.name*.

If a network-qualified name was entered on the LOGON operand of the command, VTAM issues *operand* in the form *netid.name*.

System Action: VTAM rejects the command.

Operator Response: If *operand* is a controlling LU, see *z/OS Communications Server: SNA Operation* for information on the correct syntax of the VARY ACT command.

Programmer Response: None.

IST1148I *nodename command* **RNAME =** *operand* **FAILED**

Explanation: VTAM issues this message when *command* failed for *nodename* because an unacceptable *operand* was entered.

The command failed for one of the following reasons:

- **RNAME** = *nodename* was specified during activation of a communication controller where *nodename* is the name of a logical unit and therefore is not valid.
- The value specified in the **RNAME** *operand* is not a valid link station name.
- **RNAME** = *backup* was specified, but VTAM was not able to process backup link station *backup*.
- The value specified in the **RNAME** *operand* does not match the Network Control Program (NCP) definition.

If a network-qualified name was entered on the command line, VTAM issues *nodename* in the form *netid.name*.

System Action: VTAM rejects the command.

Operator Response: Reenter the command specifying a valid nodename or value for *operand*.

Programmer Response: None.

IST1149I VARY *command* **PROCESSING FOR NODE** *nodename* **COMPLETE**

Explanation: VTAM issues this message when the specified VARY command processing has completed for resource *nodename*.

If a network-qualified name was entered on the command line, VTAM issues *nodename* in the form *netid.name*.

System Action: Processing continues.

Operator Response: None.

Programmer Response: None.

IST1150I *uservar* **CHANGED:** *value1* **TO** *value2*

Explanation: This message is part of a group of messages that VTAM issues when a MODIFY USERVAR command is used to change the value of a USERVAR. The first message in the group is IST1283I. See that message for a complete description of the group.

Note: This message is percolated. See "Message rerouting and percolation" on page 710 for additional information.

value1 is the original value of *uservar*. If a network-qualified name was entered on the previous MODIFY command, VTAM issues *value1* in the form *netid.name*.

value2 is the new value of *uservar*. If a network-qualified name was entered on the current MODIFY command, VTAM issues *value2* in the form *netid.name*.

Any subsequent session requests to *uservar* are routed to the application named in *value2*.

System Action: Processing continues.

Operator Response: None.

Programmer Response: None.

IST1151I USERVAR *uservar* **DEFINED: VALUE =** *value*

Explanation: This message is the first in a group of messages that VTAM issues when a MODIFY USERVAR command is used to define a USERVAR. A complete description of the message group follows.

```
 IST1151I USERVAR uservar DEFINED: VALUE = value
[IST1030I USERVAR EXIT IS exitname]
 IST314I  END
```

Note: This message group is percolated. See "Message rerouting and percolation" on page 710 for additional information.

IST1151I

uservar is the name of the USERVAR.

The value of *uservar* has been initialized to *value*. If a network-qualified name was entered on the command line, VTAM issues *value* in the form *netid.name*.

Any subsequent session requests to *uservar* are routed to the resource named in *value*.

IST1030I

exitname is the name of the USERVAR exit. If no USERVAR exit is defined, VTAM does not issue this message.

System Action: Processing continues.

Operator Response: None.

Programmer Response: None.

IST1152I *nodename* **CONTROLLING LU [***luname***] REMOVED**

Explanation: VTAM issues this message when processing of the VARY NOLOGON command has been completed. Resource *nodename* will no longer be automatically logged on to *luname* when *nodename* is not in session with or queued for a session with another PLU. *luname* may or may not be included depending on how the LU is specified in the NOLOGON command.

If a network-qualified name was entered on the ID operand of the command, VTAM issues *nodename* in the form *netid.name*.

If a network-qualified name was entered on the NOLOGON operand of the command, VTAM issues *luname* in the form *netid.name*.

System Action: Processing continues.

Operator Response: None.

Programmer Response: None.

IST1153I *nodename1 nodename2* **SESSION** *bp***BUF USE** *percentage*

Explanation: VTAM detected that the session indicated is using 10 percent or greater of the *bp*BUF buffer pool.

Note: This message is percolated. See “Message rerouting and percolation” on page 710 for additional information.

nodename1 and *nodename2* are the session partners for the session using the largest percentage of the pool. VTAM issues *nodename1* and *nodename2* as network-qualified names in the form *netid.name*. If VTAM does not know a node name, the node ID is presented in the form *subarea/element*, where *subarea* is the subarea and *element* is the element portion of the network address.

*bp***BUF**, the name of the buffer pool, will always be IO.

percentage is the percentage of this buffer pool used by this session.

If the session between *nodename1* and *nodename2* is not using a large percentage of the buffer pool, the size of the buffer pool was probably underestimated.

If the session between *nodename1* and *nodename2* is using a large percentage of the buffer pool, one of the following conditions probably exists:

- Either *nodename1* or *nodename2* is malfunctioning. This could be a hardware, microcode, or application program error that causes VTAM to be flooded with data.
- Neither *nodename1* nor *nodename2* is malfunctioning, but a large amount of data is being transmitted on this session with no pacing in effect.

System Action: Message IST154I, IST1098I, or IST1099I is displayed with this message.

- If message IST154I is displayed, the buffer pool is not expanded at this time. When more storage becomes available, VTAM may try again to expand the buffer pool. VTAM may be adversely affected by this failure to obtain more buffers.
- If message IST1098I or IST1099I is displayed, processing continues.
  - If the session is an SSCP-LU session, then the LU is deactivated, and message IST1098I is displayed.
  - If the session is an LU-LU session (including CP-CP) then the session is terminated, and message IST1099I is displayed.

Once VTAM has determined that a session is using greater than 10 percent of the buffer pool, a determination is made whether to automatically terminate the session. If the percentage is greater than or equal to the HOTIOTRM start option value, VTAM initiates termination of all the sessions between *nodename1* and *nodename2*. VTAM issues message IST1099I when sessions are automatically terminated.

Operator Response:

- If it appears that the problem is caused by a malfunctioning device LU, try to deactivate the device using the VARY INACT command. In extreme cases, you may have to physically disconnect or power-off the device.
- If it appears that the problem is caused by a VTAM application program, take a dump of that program and terminate it. Save the system log for problem determination.
- If VTAM continues to issue this message, enter the DISPLAY BFRUSE command. Save the system log and request a dump for problem determination.

Programmer Response:

- Ensure that session pacing is in effect for the session using the largest percentage of the buffer pool. The BIND request unit contains the values used for each session. See the *z/OS Communications Server: SNA Network Implementation Guide* for more information about session pacing.
- If message IST154I is displayed before this message, and the session between *nodename1* and *nodename2* is not using a large percentage of the buffer pool, the size of the buffer pool was probably underestimated.
- If message IST154I was issued, use the explanation of *code* in that message to determine which buffer pool you need to modify.
- You might want to redefine your buffer pool or CSA start options. If the start option cannot be modified using the MODIFY VTAMOPTS command, you must modify the VTAM start options file (ATCSTRxx) and restart VTAM to use the start option.
- If you want VTAM to automatically terminate these sessions, specify the HOTIOTRM start option with a value that is less than or equal to *percentage*. This start option can be modified using the MODIFY VTAMOPTS command.
- For additional information, refer to:
  - the *z/OS Communications Server: SNA Network Implementation Guide* for an explanation and description of buffer pools and for general information on buffer pool specification and allocation.
  - the *z/OS Communications Server: SNA Resource Definition Reference* for more information on the HOTIOTRM start option and other VTAM start options.
  - the *z/OS Communications Server: SNA Operation* for information about the DISPLAY BFRUSE Command, the DISPLAY STORUSE Command, and the MODIFY VTAMOPTS Command.
  - the *z/OS Communications Server: SNA Diagnosis Vol 2, FFST Dumps and the VIT* for information about analyzing dumps and about analyzing storage using the VIT analysis tool, if external trace is active.

IST1154I *resourcename_1* **...** *resourcename_n*

Explanation: This message is part of a group of messages that VTAM issues in response to a DISPLAY LMTBL, TYPE=LUNAME command. The first message in the group is either IST986I or IST1006I. See the explanation of those messages for a complete description.

IST1155I *nodename* **VARY NOLOGON =** *applname* **FAILED**

Explanation: VTAM issues this message in response to a VARY NOLOGON command. The command failed because a controlling relationship existed for *nodename* with a different application than the specified *applname*.

If a network-qualified name was entered on the ID operand of the command, VTAM issues *nodename* in the form *netid.name*.

If a network-qualified name was entered on the NOLOGON operand of the command, VTAM issues *applname* in the form *netid.name*.

System Action: Processing continues.

Operator Response: Enter a DISPLAY ID command for *nodename* to verify that a controlling relationship exists. Reenter the VARY NOLOGON command with the indicated *applname*.

Programmer Response: None.

IST1156I **USERVAR** *uservar* **IN** *netid* **HAS VALUE** *value*

Explanation: VTAM issues this message in response to one of the following commands:

- DISPLAY SESSIONS

  This message is part of a group of messages that VTAM issues in response to a DISPLAY SESSIONS command when the resource name specified on the command is the name of a USERVAR.

- DISPLAY ID

  This message is part of a group of messages that VTAM issues in response to a DISPLAY ID command when the resource name specified on the ID operand is the name of a USERVAR. The first message in the group is IST075I.

uservar is a user-defined name for a network resource in network *netid* with the value of *value*. If *uservar* has a network-qualified USERVAR value, VTAM issues *value* as a network-qualified name in the form *netid.name*.

If *uservar* is both a user variable and a network resource, VTAM will display the resource and ignore the user variable value. Otherwise, VTAM will display the resource represented by the value of the USERVAR, *value*. If this message is issued in response to a DISPLAY ID command, message IST075I contains the name of the resource being displayed.

Note: If IDTYPE=USERVAR is entered on the command, VTAM displays the USERVAR *value* in message IST075I and not the real resource.

System Action: Processing continues.

Operator Response: None.

Programmer Response: None.

IST1157I DUPLICATE REGISTRATION *endnode1 endnode2*

Explanation: This message is the first in a group of messages that VTAM issues when it receives registration requests for the same resource from two different end nodes *endnode1* and *endnode2*. This happens when one of the following conditions occurs:

- The resource has been moved from one end node to another, and the first end node has failed to delete the resource from the network node server. This is not an error condition.
- Both end nodes have a definition for the same resource, and have specified that the resource should be registered. This is an error condition.

A full description of the message group follows:

```
IST1157I  DUPLICATE REGISTRATION endnode1 endnode2
IST1194I  DUPLICATE RESOURCE IS resourcename
IST314I   END
```

IST1157I

endnode1 and *endnode2* are the network-qualified names of the two end node control points, in the form *netid.name*.

IST1194I

This message identifies the resource that has been registered twice.

resourcename is the network-qualified name of the resource, in the form *netid.name*.

System Action: The information in the second registration request replaces the information from the first registration request. Processing continues.

Operator Response: Save the system log for problem determination.

Programmer Response: Ensure that duplicate resource definition has not taken place.

IST1158I MODIFY TOPO COMMAND FAILED, ID = *nodename* **[TGN =** *tgnumber***]**

Explanation: This message is the first in a group of messages that VTAM issues when a MODIFY TOPO command fails. A complete description of the message group follows:

```
 IST1158I  MODIFY TOPO COMMAND FAILED, ID = nodename
[IST1159I  HOST NODE DATABASE ENTRY CANNOT BE DELETED]
[IST1160I  TYPE=FORCE MUST BE SPECIFIED FOR LOCAL TG OR ADJACENT NODE]
[IST1248I  DEACTIVATE LOCAL LINK BEFORE DELETING]
[IST1308I  RESOURCE WAS NOT FOUND IN THE TOPOLOGY DATABASE]
 IST314I  END
```

IST1158I

nodename is the name of the resource specified on the ID operand of the command. If a network-qualified name was entered on the command, VTAM issues *nodename* as a network-qualified name in the form *netid.name*.

tgnumber, if specified, is the transmission group (TG) number on the TGN operand of the command.
TGN = *tgnumber* is not displayed if the second message in the group is IST1159I.

IST1159I

This message is issued when *nodename* is the same node from which the command is entered. In this message group, *nodename* in message IST1158I is the same node as **HOST NODE** in message IST1159I. You cannot delete the topology database entry representing the host node.

IST1160I

This message is issued when TYPE=FORCE was not specified on the command, and the resource is a locally attached TG or an adjacent node. TYPE=FORCE is required to delete the topology database entry for a locally attached TG or an adjacent node.

IST1248I

This message is issued when you attempt to delete locally attached TG *tgnumber*, and it is active. VTAM does not allow you to delete an active locally attached TG.

IST1308I

This message is issued when *nodename* or *tgnumber* cannot be found in the topology database.

System Action: The topology database is not changed. Other processing continues.

Operator Response:

IST1159I

Verify that *nodename* was entered correctly. If *nodename* is the same node from which the command is entered, you cannot delete the topology database entry for this resource.

IST1160I

To delete the local TG *tgnumber* or the adjacent node *nodename*, enter the command again specifying TYPE=FORCE.

IST1248I

To delete TG *tgnnumber*, enter a VARY INACT command to deactivate the link first, and then reenter the MODIFY TOPO,FUNCTION=DELETE command.

IST1308I

Verify that *nodename* and *tgnumber*, if applicable, were entered correctly.

Programmer Response: None.

IST1159I HOST NODE DATABASE ENTRY CANNOT BE DELETED

Explanation: VTAM issues this message as part of a group of messages. The first message in the group is IST1158I. See the explanation of that message for a complete description.

IST1160I TYPE=FORCE MUST BE SPECIFIED FOR LOCAL TG OR ADJACENT NODE

Explanation: VTAM issues this message as part of a group of messages. The first message in the group is IST1158I. See the explanation of that message for a complete description.

IST1161I SSCP SESSIONS

Explanation: VTAM issues this message as part of a group of messages in response to a DISPLAY SESSIONS command. The first message in the group is either IST873I or IST878I. See the explanation of the first message in the group for a complete description.

IST1162I *sessiontype* **=** *count*

Explanation: VTAM issues this message as part of a group of messages in response to a DISPLAY SESSIONS command. The first message in the group is either IST873I or IST878I. See the explanation of the first message in the group for a complete description.

IST1163I RSN HPR TIME LEFT

Explanation: VTAM issues this message as part of a group of messages in response to a DISPLAY TOPO command. See message IST1295I for a complete description of possible message groups.

IST1164I *rsn hpr timeleft*

Explanation: VTAM issues this message as part of a group of messages in response to a DISPLAY TOPO command. See message IST1295I for a complete description of possible message groups.

IST1165I {REMOTE|LOCAL} *network_type* **ADDRESS =** *connection_address*

Explanation: VTAM issues this message as part of a group of messages in response to a DISPLAY SESSIONS,SID command. See message IST879I for a complete description of the message group.

IST1166I VIRTUAL NODE *nodename* **CONNECTION ACTIVATION FAILED**

Explanation: This message is the first in a group of messages that VTAM issues in response to a VARY ACT for a line when the activation of the logical connection with the virtual node fails. Possible message groups follow:

```
 IST1166I  VIRTUAL NODE nodename CONNECTION ACTIVATION FAILED
 IST1226I  TOPOLOGY UPDATE FAILED, INSUFFICIENT STORAGE
 IST314I   END

 IST1166I  VIRTUAL NODE nodename CONNECTION ACTIVATION FAILED
 IST1334I  TGN NOT AVAILABLE
 IST314I   END

 IST1166I  VIRTUAL NODE nodename CONNECTION ACTIVATION FAILED
 IST1346I  NCP DOES NOT SUPPORT CONNECTION NETWORK FUNCTION
 IST314I   END

 IST1166I  VIRTUAL NODE nodename CONNECTION ACTIVATION FAILED
 IST134I   GROUP = groupname, MAJOR NODE = nodename
[IST1622I DLCADDR SUBFIELD subfield_id NOT VALID - subfield_description]
[IST1623I DUPLICATE DLCADDR SUBFIELD subfield_id - subfield_description]
[IST1624I DLCADDR SUBFIELD 7 NOT SPECIFIED - TRAFFIC DESCRIPTOR]
 IST314I   END
```

This message group is issued when one of the following has occurred:

- A transmission group (TG) number could not be assigned because all of the TG numbers for the connection network are being used.
- The topology update for the active logical connection failed due to insufficient storage.
- The NCP does not support the connection network function because it is running on a version prior to Version 6 Release 3.
- The activation of an ATM native connection network failed because of an improperly coded set of DLCADDR operands on the GROUP definition statement in the external communication adapter (XCA) major node.

  IST134I

  groupname is the symbolic name of the line group in which the connection network is defined.

  nodename is the name of the major node in which the line group is defined.

IST1166I

This message is followed by message IST1622I, IST1623I, or IST1624I.

IST1622I

This message indicates that a particular DLCADDR operand in a set of DLCADDR operands is coded incorrectly.

subfield_id and *subfield_description* can be one of the following combinations:

subfield_id	*subfield_description*
7	TRAFFIC DESCRIPTOR
8	QUALITY OF SERVICE (QoS)
9	TRANSIT NETWORK SELECTION
21	ATM ADDRESS
51	ATM BEARER CAPABILITIES
61	ATM ADAPTATION LAYER (AAL)

IST1623I

This message indicates that two DLCADDR operands in a set of DLCADDR operands are coded with the same subfield id.

subfield_id and *subfield_description* can be one of the following combinations:

subfield_id	*subfield_description*
7	TRAFFIC DESCRIPTOR
8	QUALITY OF SERVICE (QoS)
9	TRANSIT NETWORK SELECTION
21	ATM ADDRESS
51	ATM BEARER CAPABILITIES
61	ATM ADAPTATION LAYER (AAL)

IST1624I

This message indicates that a DLCADDR operand with subfield 7 is not coded in a set of DLCADDR operands. A DLCADDR operand with subfield 7 is required for ATM native connections.

System Action: Processing continues.

Operator Response:

IST1226I

Enter the DISPLAY BFRUSE command to display information about the common service area (CSA). Total VTAM private storage information is also displayed in message IST981I.

Enter the DISPLAY STORUSE command to display storage usage for storage pools.

Save the system log and request a dump for problem determination.

IST1334I

Save the system log for problem determination.

IST1346I

Save the system log and request a dump for problem determination.

IST1622I

Save the system log for problem determination.

IST1623I

Save the system log for problem determination.

IST1624I

Save the system log for problem determination.

Programmer Response:

IST1226I

Increase storage as required.

See the *z/OS Communications Server: SNA Operation* for more information.

IST1334I

Make additional TG numbers available using one of the following methods:

- Deactivate one or more lines in order to free up TG numbers.
- Define a new virtual node by specifying a new VNNAME on one or more of the lines and reactivate the line. Each virtual node must be defined on both sides of the line.

IST1346I

Verify that the NCP is at a level that supports the connection network function (Version 6 Release 3 or higher). Refer to the appropriate NCP manual for more information.

IST1622I

Correct the DLCADDR operand that is in error in the set of DLCADDR operands on the GROUP definition statement in the XCA major node indicated in message IST134I. Refer to the *z/OS Communications Server: SNA Resource Definition Reference* for information about how to code the DLCADDR operand on the GROUP definition statement in the XCA major node.

IST1623I

Delete all but one DLCADDR operand with the same subfield identifier in the set of DLCADDR operands on the GROUP definition statement in the XCA major node indicated in message IST134I. Refer to the *z/OS Communications Server: SNA Resource Definition Reference* for information about how to code the DLCADDR operand on the GROUP definition statement in the XCA major node.

IST1624I

Code a DLCADDR operand with subfield 7 to define traffic management options in the set of DLCADDR operands on the GROUP definition statement in the XCA major node indicated in message IST134I. Refer to the *z/OS Communications Server: SNA Resource Definition Reference* for information about how to code the DLCADDR operand on the GROUP definition statement in the XCA major node.

IST1167I VN *nodename* CONNECTION DEACTIVATION FAILED

Explanation: This message is the first in a group of messages VTAM issues when the deactivation of the logical connection with the virtual node fails because the topology update for the inactive logical connection did not complete successfully. A complete description of the message group follows.

```
IST1167I   VN nodename CONNECTION DEACTIVATION FAILED
IST1226I   TOPOLOGY UPDATE FAILED, INSUFFICIENT STORAGE
IST314I    END
```

nodename is the name of the virtual node.

System Action: Processing continues.

Operator Response: Enter the DISPLAY BFRUSE command to display information about the common service area (CSA). Total VTAM private storage information is also displayed in message IST981I.

Enter the DISPLAY STORUSE command to display storage usage for storage pools.

Save the system log and request a dump for problem determination.

Programmer Response: Increase storage.

For more information see the *z/OS Communications Server: SNA Operation* and the *z/OS Communications Server: SNA Diagnosis Vol 1, Techniques and Procedures*.

IST1168I VIRTUAL NODE *nodename* **CONNECTION ACTIVE**

Explanation: VTAM issues this message in response to a VARY ACT command for a line when the logical connection with the virtual node becomes active.

nodename is the name of the virtual node.

System Action: Processing continues.

Operator Response: None.

Programmer Response: None.

IST1169E *poaname* **REPLY ID FOR MESSAGE** *msgid* **NOT AVAILABLE**

Explanation: VTAM has a write-to-operator with reply (WTOR) message *msgid* to send to the program operator application (POA) *poaname*, but a reply ID is not available for this *poaname*. This can occur for either of the following reasons:

- The POA is not issuing RCVCMD macros quickly enough to receive outstanding WTOR messages.
- The outstanding WTOR messages have been received by the POA, but replies have not been received by VTAM.

poaname is the name of the POA that is to receive the VTAM message.

msgid is the ID of the failing message.

System Action: Message *msgid* and all subsequent WTOR messages will be rerouted to the system console until a reply ID becomes available for this *poaname*.

Operator Response:

1. Issue DISPLAY ID=*poaname* and save the system log for problem determination. Message IST271I will provide the *jobname* related to the *poaname*.
2. Request a dump of the application program (*jobname*) and VTAM for problem determination.

Programmer Response:

- If the POA is not issuing RCVCMD macros quickly enough, you can clear the VTAM message queue for *poaname* by issuing RCVCMD macros with OPTCD=NQ until the queue is empty.
- If RCVCMD macros are being issued quickly enough, examine the dump and the VTAM internal trace (if available) to determine why the messages are not being received or responded to quickly enough.
- The POA must issue a SENDCMD macro to send a REPLY command to VTAM for each of the outstanding WTOR messages. Check to ensure that the RCVCMD and SENDCMD macros are being received by VTAM.
- You might need to change the POA RCVCMD processing so that RCVCMDs are issued more frequently.
- You can also change the dispatching priority of the POA. Refer to your operating system documentation for information on dispatching priority.
- You can cancel the job related to *poaname*. This will clear the VTAM message queue for *poaname*.

Refer to program operator coding requirements in *z/OS Communications Server: SNA Programming* for information on program operator applications, RCVCMD and SENDCMD macros, and VTAM reply IDs.

IST1176I BASIC FROZEN

Explanation: This message is part of a group of messages that VTAM issues in response to a DISPLAY STATS command when TYPE=COMPRESS is specified. See the explanation of message IST1435I for a complete description of the group.

IST1177I *level input basic frozen*

Explanation: VTAM issues this message as part of a message group in response to a DISPLAY STATS command when TYPE=COMPRESS is specified. See the explanation of message IST1435I for a complete description of the group.

IST1183I *exitname* **EXIT RETURNED A CODE OF** *usercode* **[***label diagcode***]**

Explanation: This message is issued by VTAM in response to a condition identified in an installation-wide exit.
- For base exits, this message is issued as a stand-alone message.
- For multiple exits, this message is issued in a message group. A description of the message group follows:

```
IST1183I  exitname EXIT RETURNED A CODE OF usercode [label diagcode ]
IST1407I  instance_name IS A MULTIPLE INSTANCE OF EXIT exitname
IST314I   END
```

IST1183I

exitname is the name of the installation-wide routine.

usercode is the hexadecimal return code in register 15 passed by the exit routine.

label and *diagcode* are not issued for all exits.

label is message text specific to *exitname* that labels the VTAM diagnosis code *diagcode*.

diagcode is a VTAM-generated code for the exit *exitname*.

IST1407I

exitname is the name of the installation-wide routine.

instance_name is the instance name of the exit routine.

System Action: The system action depends on the hexadecimal *usercode* for *exitname* in message IST1183I. If *diagcode* is displayed, the system action might depend on this code.

Operator Response: Save the system log for problem determination.

Programmer Response: Use *exitname*, the exit return code *usercode*, *label*, and *diagcode* in message IST1183I when referring to *z/OS Communications Server: SNA Customization* to determine the meaning of the codes and to ensure that the proper codes are defined in the exit routine.

If you are using the IBM-supplied USERVAR exit routine specific to the Transaction Processing Facility (TPF) environment, refer to the *z/OS Communications Server: SNA Customization* for return codes.

If *z/OS Communications Server: SNA Customization* requires no specific exit return code from the exit, check with the author of the exit routine for a description of the user-written codes.

IST1184I CPNAME = *cpname* **– NETSRVR =** *network_node_server*

Explanation: This message is part of several groups of messages that VTAM issues in response to a DISPLAY DIRECTRY or DISPLAY ID=*cdrsc* command.
- If DISPLAY DIRECTRY is issued, the first message in the group is IST1186I. See the description of IST1186I for more information.
- If DISPLAY ID=*cdrsc* is issued, IST1184I may be issued alone or in a message subgroup or both.
  - IST1184I may be issued with other messages displaying CDRSC information:

    ```
    IST1184I  CPNAME = cpname – NETSRVR = ***NA***
    ```
  - IST1184I may be issued in the following subgroup:

IST1184I

```
[IST075I   NAME = nodename, TYPE = nodetype]
 IST1186I  DIRECTORY ENTRY = entrytype resourcetype
 IST1184I  CPNAME = cpname — NETSRVR = network_node_server
[IST1402I  SRTIMER = srtimer  SRCOUNT = srcount]
[IST1401I  RESOURCE NOT FOUND-RETRY IN time SEC(S) OR number REQUEST(S)]
 IST314I   END
```

Note: If the IDTYPE operand was specified on the DISPLAY ID command, information about subarea resources might precede the IST1186I subgroup. See the *z/OS Communications Server: SNA Operation* for mor information.

IST075I

This message is only displayed for a DISPLAY ID command.

nodename is the resource name specified on the ID operand of the command.

nodetype is the resource type of *nodename*. See Chapter 15, “Node and ID types in VTAM messages” on page 697 for a description of *nodetype*.

IST1184I

cpname is the network-qualified name of the owning control point in the form *netid.name*.

In the combined APPN and subarea network, the owning CP may actually be an SSCP or a network node in a different APPN subnetwork. All owning CPs found in or through a subarea network are represented to the origin CP as an end node being served by the interchange node through which the resource was found.

network_node_server is the network-qualified name of the network node server in the form *netid.name*. *network_node_server* represents the network node in the host’s APPN subnetwork that should be contacted to locate the target resource. If DISPLAY ID=*cdrsc* is issued, *network_node_server* may be *****NA*****, indicating that this information is not applicable.

Note: If the CPNAME displayed is actually a CDRM name and the subject resource has a different NETID than its owning CDRM, then the NETID displayed may be that of the resource (rather than the CDRM), if this is the only information available.

IST1186I

This message indicates that the resource has been found in the directory database and displays information about the resource.

entrytype is one of the following:

DEFINED
The resource was pre-defined to the directory database.

DYNAMIC
The resource was learned of as the result of a dynamic search request and was stored.

REGISTERED
The resource was registered to the directory database through end node resource registration.

resourcetype represents the resource type known by the host APPN directory and may be different from the actual type of the resource. *resourcetype* is one of the following:

EN Represents an end node, which is also known as the owning control point (CP) of a resource.

LU Represents a logical unit.

NN
Represents the network node in the host’s APPN subnetwork.

IST1401I

cpname is the network-qualified name of the owning control point in the form *netid.name*.

In the combined APPN and subarea network, the owning CP may actually be an SSCP or a network node in a different APPN subnetwork. All owning CPs found in or through a subarea network are represented to the origin CP as an end node being served by the interchange node through which the resource was found.

network_node_server is the network-qualified name of the network node server in the form *netid.name*. *network_node_server* represents the network node in the host's APPN subnetwork that should be contacted to locate the target resource. If DISPLAY ID=*cdrsc* is issued, *network_node_server* may be ***NA***, indicating that this information is not applicable.

Note: If the CPNAME displayed is actually a CDRM name and the subject resource has a different NETID than its owning CDRM, then the NETID displayed may be that of the resource (rather than the CDRM), if this is the only information available.

IST1402I

VTAM issues this message when the SRCHRED start option is ON. The SRCOUNT and SRTIMER values that are being used for the displayed resource are shown.

srtimer is the amount of time in seconds that VTAM will limit searching for a resource that it previously was unable to locate.

srcount is the number of requests that VTAM limit searching for the resource that it was previously unable to locate.

System Action: Processing continues.

Operator Response: None

Programmer Response: None.

IST1185I NAME = *resourcename* **– DIRECTORY ENTRY =** *entrytype resourcetype*

Explanation: VTAM issues this message as part of a subgroup of messages in response to a DISPLAY DIRECTRY command. The first message in the subgroup is IST1184I. See the explanation of that message for a complete description.

IST1186I DIRECTORY ENTRY = *entrytype resourcetype*

Explanation: This message is part of a group of messages that VTAM issues in response to a DISPLAY ID command or a DISPLAY DIRECTRY command.

- If DISPLAY DIRECTRY is issued, the following message group is displayed:

```
[IST350I   DISPLAY TYPE = DIRECTORY]
 IST1186I  DIRECTORY ENTRY = entrytype resourcetype
 IST1184I  CPNAME = cpname – NETSRVR = network_node_server
[IST484I SUBAREA = subarea]
[IST1703I  DESIRED LOCATE SIZE = desiredlocatesize, LAS LOCATE SIZE = lastlocatesize]
[IST1402I  SRTIMER = srtimer  SRCOUNT = srcount]
[IST1401I  RESOURCE NOT FOUND-RETRY IN time SEC(S) OR number REQUEST(S)]
[IST1185I  NAME = resourcename - DIRECTORY ENTRY = entrytype resourcetype]
 IST314I   END
```

- If DISPLAY ID is issued, the following message group may be displayed:

```
[IST075I   NAME = nodename, TYPE = nodetype]
 IST1186I  DIRECTORY ENTRY = entrytype resourcetype
 IST1184I  CPNAME = cpname – NETSRVR = network_node_server
[IST484I SUBAREA = subarea]
[IST1703I  DESIRED LOCATE SIZE = desiredlocatesize, LAS LOCATE SIZE = lastlocatesize]
[IST1402I  SRTIMER = srtimer  SRCOUNT = srcount]
[IST1401I  RESOURCE NOT FOUND-RETRY IN time SEC(S) OR number REQUEST(S)]
 IST314I   END
```

Note: If the IDTYPE operand was specified on the DISPLAY ID command, information about subarea resources might precede the IST1186I subgroup. See the *z/OS Communications Server: SNA Operation* for more information.

IST075I

This message is only displayed for a DISPLAY ID command.

nodename is the resource name specified on the ID operand of the command.

nodetype is the resource type of *nodename*. See Chapter 15, “Node and ID types in VTAM messages” on page 697 for a description of *nodetype*.

IST350I

This message is only displayed for a DISPLAY DIRECTRY command and is always **DIRECTORY**.

IST484I

subarea is the subarea number of the logical unit.

IST1184I

cpname is the network-qualified name of the owning control point in the form *netid.name*.

In the combined APPN and subarea network, the owning CP may actually be an SSCP or a network node in a different APPN subnetwork. All owning CPs found in or through a subarea network are represented to the origin CP as an end node being served by the interchange node through which the resource was found.

network_node_server is the network-qualified name of the network node server in the form *netid.name*. *network_node_server* represents the network node in the host’s APPN subnetwork that should be contacted to locate the target resource. If DISPLAY ID=*cdrsc* is issued, *network_node_server* may be *****NA*****, indicating that this information is not applicable.

Note: If the CPNAME displayed is actually a CDRM name and the subject resource has a different NETID than its owning CDRM, then the NETID displayed may be that of the resource (rather than the CDRM), if this is the only information available.

IST1185I

This message is issued only when there are resources subordinate to *cpname* in message IST1184I, and is repeated for each subordinate resource.

resourcename is the network-qualified name of a resource that is subordinate to *cpname* in message IST1184I. VTAM issues *resourcename* in the form *netid.name*.

entrytype is one of the following:

DEFINED
The resource was pre-defined to the directory database.

DYNAMIC
The resource was found as the result of a dynamic search request and was stored.

REGISTERED
The resource was registered to the directory database through end node resource registration.

resourcetype represents the resource type known by the host APPN directory and may be different from the actual type of the resource. *resourcetype* is one of the following:

EN Represents the owning control point (CP) of a resource.

In a combined APPN and subarea network, the owning CP may actually be an SSCP or a network node in a different APPN subnetwork. All owning CPs found in or through a subarea network are represented to the origin CP as an end node being served by the interchange node through which the resource was found.

LU Represents a logical unit.

NN
Represents the network node in the host’s APPN subnetwork that should be contacted to locate the target resource.

See the *z/OS Communications Server: SNA Operation* for more information.

IST1186I

This message indicates that the resource has been found in the directory database and displays information about the resource.

entrytype is one of the following:

DEFINED
The resource was pre-defined to the directory database.

DYNAMIC
The resource was learned of as the result of a dynamic search request and was stored.

REGISTERED
The resource either was registered to the directory database through end node resource registration, or resource represents the host CP.

resourcetype represents the resource type known by the host APPN directory and may be different from the actual type of the resource. *resourcetype* is one of the following:

EN Represents an end node, which is also known as the owning control point (CP) of a resource.

LU Represents a logical unit.

NN
Represents the network node in the host's APPN subnetwork.

IST1401I

VTAM issues this message when the SRCHRED start option is ON, and the resource being displayed represents a search reduction entry. Searches will be limited for this resource as indicated by the *time* and *number* fields. See the *z/OS Communications Server: SNA Network Implementation Guide* for more information on the processing of a search reduction entry.

time is the remaining number of seconds that VTAM will limit searches for the resource it previously was unable to locate. Once the specified number of seconds expire, subsequent searches for the resource will not be limited.

number indicates the amount of requests necessary before VTAM will search for the resource with no search reduction limitations.

- If **NEXT** is displayed, VTAM will not limit the next search request for the resource.
- Otherwise, VTAM will limit the search until *number* requests have been received. For example, if *number* is **2**, VTAM will limit the first request received, but will not limit the second request received.

A value of ***NA*** for *time* or *number* means **Not Applicable**. This value will appear when the timer or counter has been set to 0.

The SRTIMER and SRCOUNT threshold values being used for this resource are displayed in message IST1402I.

IST1402I

VTAM issues this message when the SRCHRED start option is ON. The SRCOUNT and SRTIMER values that are being used for the displayed resource are shown.

srtimer is the amount of time in seconds that VTAM will limit searching for a resource that it previously was unable to locate.

srcount is the number of requests that VTAM limit searching for the resource that it was previously unable to locate.

IST1703I

desiredlocatesize is the size of the APPN locate message required to retrieve the complete routing information for the target LU. The valid range is 1-128 kilobytes.

lastlocatesize is the size of the APPN locate message last used to retrieve the routing information for the target LU. The valid range is 1-128 kilobytes.

The node that initiates the APPN search will attempt to find a route on which every APPN network node supports the *desiredlocatesize* required by the target LU. If such a route is not available, a route that supports a smaller locate message size will be used to gather routing information for the target LU. In this case, the *desiredlocatesize* will be greater than the *lastlocatesize*. This implies that the origin node that initiated the search does not have all the routing information for the target LU and this could result in the selection of a non-optimal session route to the target LU, or a session setup failure in the worst case.

lastlocatesize refers to only the locate path between network nodes and does not include the path between a network node server and served end nodes. If the destination LU is on an end node that does not support locate sizes larger than 1K, the *lastlocatesize* may be larger than 1K. To display the locate size supported by served end nodes, issue the command D NET,TOPO,LIST=EN,LOCSIZE=* at the network node server.

System Action: Processing continues.

Operator Response: None

Programmer Response: None.

IST1187I *value* **NOT VALID–APPN NOT SUPPORTED BY** *resourcename*

Explanation: VTAM issues this message when the specified command or operand is not valid because *resourcename* does not support advanced peer-to-peer networking* (APPN).

value is one of the following:

- The name of the command that failed. For a description of *value*, see Chapter 14, “Command and RU types in VTAM messages” on page 685.
- The name of the operand that caused the command to fail.

For more information on *value*, see the *z/OS Communications Server: SNA Operation*.

resourcename is the name of the resource.

- If ID=*resourcename* was specified, *resourcename* is the network-qualified name of the resource that was specified on the command.
- If ID=*resourcename* was not specified, *resourcename* is the network-qualified name of the host where the command was entered.

VTAM issues *resourcename* in the form *netid.name*.

System Action: VTAM rejects the command.

Operator Response: Ensure that you entered the command correctly. If problems persist, save the system log for problem determination.

If ID=*resourcename* was specified, print the major node definition for *resourcename*.

Programmer Response: If ID=*resourcename* was specified, verify that *resourcename* supports APPN.

IST1188I **VTAM** *level* **STARTED AT** *time* **ON** *date*

Explanation: This message is the first in a group of messages that VTAM issues in response to a DISPLAY VTAMOPTS command.

Possible message groups follow.

1. This message group is issued in response to a DISPLAY VTAMOPTS command when FORMAT=CURRENT is specified or defaulted on the command.

```
IST1188I  VTAM level STARTED AT time ON date
IST1349I  COMPONENT ID IS dddd-ddddd-ddd
IST1348I  VTAM STARTED AS nodetype
IST1189I  option = current_value [option = current_value]
⋮
IST314I  END
```

2. This message group is issued in response to a DISPLAY VTAMOPTS command when FORMAT=MODIFIED or FORMAT=COMPLETE is specified on the command.
   - If FORMAT=MODIFIED is entered, VTAM displays information about start options that have been modified since VTAM initialization.
   - If FORMAT=COMPLETE is entered, VTAM displays information about all specified options.

```
IST1188I  VTAM level STARTED AT time ON date
IST1349I  COMPONENT ID IS dddd-ddddd-ddd
IST1348I  VTAM STARTED AS nodetype
IST1309I  START OPTION   CURRENT VALUE      ORIGINAL VALUE   ORIGIN
IST1310I  option         current_value      original_value   origin
⋮
IST314I  END
```

See the *z/OS Communications Server: SNA Operation* for more information.

level is the version (x) and release (y) of VTAM for z/OS Communications Server that is being run. For example, **CSVxRy** is displayed for VTAM for z/OS Communications Server Version x Release y.

time is the time (*hh*:*mm*:*ss*) that VTAM was started, and is expressed in the 24-hour system.

date is the date that VTAM was started. The format of *date* is based on the DATEFORM start option and can be one of the following:

DATEFORM|DATEFRM=DMY
date is **DD/MM/YY**.

DATEFORM|DATEFRM=MDY (default)
date is **MM/DD/YY**.

DATEFORM|DATEFRM=YMD
date is **YY/MM/DD**.

See the *z/OS Communications Server: SNA Resource Definition Reference* for more information.

IST1189I

option is the name of a VTAM start option.

– This message is repeated to display all options specified on the command.
– If OPTION=* is specified, VTAM displays the value of all start options.

See the *z/OS Communications Server: SNA Resource Definition Reference* for the names of possible *option*s.

current_value is the current value of *option*.

– If *current_value* represents time, this message displays this value in seconds. For example, if a value of 1 minute is specified for the CDRSCTI start option, VTAM displays *current_value* as **60S**.
– If *current_value* is *****NA*****, this indicates that *option* is not applicable for the host configuration. For example, if the host is configured as a subarea node without any APPN function, an APPN *option* cannot be specified.
– If *current_value* is ***BLANKS***, this indicates that no value was entered, and the default is blanks.

IST1309I and IST1310I

option is the name of the VTAM start option.

– This message is repeated to display all options specified on the command.
– If OPTION=* is specified, VTAM displays the value of all start options.

See the *z/OS Communications Server: SNA Resource Definition Reference* for the names of possible *option*s.

current_value is the current value of *option*.

original_value is the original value that was specified for *option*.

– If *current_value* and *original_value* represent time, this message displays those values in seconds. For example, if a value of 1 minute is specified for the CDRSCTI start option during start processing, VTAM displays *current_value* as **nS** and *original_value* as **60S**.
– If *current_value* and *original_value* are *****NA*****, this indicates that *option* is not applicable for the host configuration. For example, if the host is configured as a subarea node without any APPN function, an APPN *option* cannot be specified.
– If *current_value* and *original_value* are ***BLANKS***, this indicates that no value was entered, and the default is blanks.

origin indicates where *original_value* was specified. Possible values are:

ATCSTRxx
The start list

DEFAULT
The IBM-supplied default start options

OPERATOR
The start options entered by the operator

*****NA*****
current_value and *original_value* are *****NA*****

IST1348I

nodetype indicates the node type of this host and is determined by start options that are specified or defaulted. Possible values include:

- **END NODE**
- **INTERCHANGE NODE**
- **MIGRATION DATA HOST**
- **NETWORK NODE**
- **SUBAREA NODE**

IST1349I

dddd-ddddd-ddd is the component identifier assigned by VTAM. This identifier is used by IBM for VTAM program maintenance.See the *z/OS Communications Server: SNA Programming* for a description of vector lists and more information about the component identifier.

System Action: Processing continues.

Operator Response: None.

Programmer Response: None.

IST1189I *option* = *current_value* [*option* = *current_value*]

Explanation: VTAM issues this message as part of a group of messages in response to a DISPLAY VTAMOPTS command. The first message in the group is IST1188I. See the explanation of that message for a complete description.

IST1190I **OPEN FAILED FOR** *datasetname* **ABEND =** *abendcode* **RC =** *returncode*

Explanation: The sequential access method OPEN function failed for the specified dataset.

datasetname is the DDNAME for the dataset.

abendcode is the abend code associated with the OPEN failure. The values for *abendcode* are found in the applicable operating system documentation.

returncode is the return code associated with the abend code. The values for *returncode* are found in the applicable operating system documentation.

System Action: VTAM processing continues. *datasetname* is not available for use.

Operator Response: Save the system log for problem determination.

Programmer Response: Ensure that *datasetname* is defined in the VTAM start procedure and is available for use. The dataset characteristics should be compatible with those specified in the *z/OS Communications Server: SNA Migration*. For further responses, consult the applicable sequential access method documentation.

IST1191I **I/O ERROR ON** *datasetname* **{ERROR =** *description* **| ABEND =** *abendcode* **RC =** *returncode***}**

Explanation: An I/O error occurred for the specified data set.

datasetname is the DDNAME for the dataset.

description is the error description portion of the message generated by the sequential access method SYNADAF macro.

abendcode is the abend code associated with the failure. The values for *abendcode* are found in the applicable operating system documentation.

returncode provides the return code associated with the abend code. The values for *returncode* are found in the applicable operating system documentation.

System Action: Processing continues.

Operator Response: Save the system log for problem determination.

Programmer Response:

If an abend code and a return code are provided, refer to your operating system documentation for an explanation of

the codes. Use the codes in conjunction with your applicable sequential access method documentation to resolve the problem.

If the error description portion of the message generated by the SYNADAF macro is provided, refer to the applicable sequential access method documentation for more information.

IST1192I CLOSE FAILED FOR *datasetname* **ABEND =** *abendcode* **RC =** *returncode*

Explanation: The sequential access method CLOSE function failed for the specified dataset.

datasetname is the DDNAME for the dataset.

abendcode is the abend code associated with the CLOSE failure. The values for *abendcode* are found in the applicable operating system documentation.

returncode is the return code associated with the abend code. The values for *returncode* are found in the applicable operating system documentation.

System Action: Processing continues.

Operator Response: Save the system log for problem determination.

Programmer Response: Consult the applicable sequential access method documentation for appropriate responses.

IST1193I *sessiontype* **SESSION DEACTIVATION FAILURE FOR** *resource*

Explanation: VTAM issues this message when it is unable to complete the *sessiontype* session deactivation.

- If *sessiontype* is **CP-CP**, *resource* is the name of the adjacent control point. If the network where the resource resides is known to VTAM, *resource* is issued as a network-qualified name in the form *netid.name*. The CP-CP session deactivation failure is due to a lack of storage.
- If *sessiontype* is **CP-SVR**, *resource* is the name of the CDRSC representing the dependent LU requester (DLUR). If the network where the resource resides is known to VTAM, *resource* is issued as a network-qualified name in the form *netid.name*. The CP-SVR session deactivation failure is due to either a lack of storage or a failure to find the DLUR element control block.

System Action: Processing continues.

Operator Response:

- If *sessiontype* is **CP-CP**, issue a DISPLAY ID=*resource*,CPNODE=YES,E command to determine whether CP-CP sessions are still active with *resource*. If they are, issue a VARY INACT,ID=*resource*,CPNODE=YES command to bring the CP-CP sessions down. When the CP-CP sessions are successfully deactivated, message IST1097I will appear.
- If *sessiontype* is **CP-SVR**, issue a DISPLAY ID=*resource* command to determine whether CP-SVR sessions are still active with *resource*. If they are, issue a VARY INACT,ID=*resource* command to bring the CP-SVR sessions down. When the CP-SVR sessions are successfully deactivated, message IST1133I will appear.

Programmer Response: None.

IST1194I DUPLICATE RESOURCE IS *resourcename*

Explanation: VTAM issues this message as part of a group of messages when VTAM has received registration requests for the same resource from two different end nodes. The first message in the group is IST1157I. See the explanation of that message for a complete description.

IST1196I APPN CONNECTION FOR *resourcename* **INACTIVE – TGN =** *tgn*

Explanation: VTAM issues this message when an APPN connection for an adjacent control point becomes inactive. The major node to which the adjacent control point was attached has been deactivated.

resourcename is the network-qualified name of the adjacent control point in the form *netid.name*.

tgn is the transmission group number.

System Action: Processing continues.

Operator Response: None.

Programmer Response: None.

IST1197I **ADJCP MAJOR NODE =** *majornode*

Explanation: VTAM issues this message as part of a group of messages in response to a DISPLAY ADJCP command for an adjacent control point. Possible message groups follow.

- If SCOPE=ALL was specified on the command, VTAM issues the following message group:

```
IST350I   DISPLAY TYPE = ADJACENT CONTROL POINT
IST486I   STATUS= ACTIV, DESIRED STATE= ACTIV
IST1197I  ADJCP MAJOR NODE = majornode
IST1101I  ADJACENT CP DISPLAY SUMMARY FOR adjcpname
IST1102I  NODENAME          NODETYPE CONNECTIONS CP CONNECTIONS NATIVE
IST1103I  nodename          nodetype connections cp_connections native
IST1104I  CONNECTION SUMMARY FOR adjcpname
IST1105I  RESOURCE STATUS   TGN  CP-CP  TG CHARACTERISTICS
IST1106I  resource status   tgn  cp-cp  tg_characteristics
:
IST314I   END
```

- If SCOPE=ALL was not specified on the command, VTAM issues the following message group:

```
IST350I   DISPLAY TYPE = ADJACENT CONTROL POINT
IST486I   STATUS= ACTIV, DESIRED STATE= ACTIV
IST1197I  ADJCP MAJOR NODE = majornode
IST314I   END
```

IST1197I

majornode is the network-qualified name of the major node which contains the resources. VTAM issues *majornode* in the form *netid.name*.

IST1101I – IST1106I

For a description of this message subgroup, see the explanation of IST1101I on page 348.

System Action: Processing continues.

Operator Response: None.

Programmer Response: None.

IST1198I *resourcename* **DELETED FROM DIRECTORY**

Explanation: VTAM issues this message when the MODIFY DIRECTRY,ID=*name* command changed the owning CP's name (CPNAME) for *resourcename* to this host's CP name.

Resources owned by this host are not duplicated in the APPN resource directory so *resourcename* has been deleted from the APPN resource directory.

resourcename is the network-qualified name of the resource in the form *netid.name*.

System Action: Processing continues.

Operator Response: None.

Programmer Response: None.

IST1199I *command* **FOR** *resourcename* **FAILED, UNKNOWN RESOURCE**

Explanation: VTAM issues this message in response to one of the following commands:

- MODIFY DIRECTRY,UPDATE which attempted to change the owning CP or the network node server for *resourcename*. The name specified on either the CPNAME, ID or NETSRVR operand is unknown to the APPN directory and cannot be modified.
- MODIFY DIRECTRY,DELETE which attempted to delete resource *resourcename*. The name specified on the ID operand is not known to the APPN directory and cannot be modified.

command is always **F DIRECTRY** which refers to the MODIFY DIRECTRY,UPDATE or MODIFY DIRECTRY,DELETE commands.

resourcename is the network-qualified name of the resource in the form *netid.name*. *resourcename* can be the same resource that was specified on the ID operand of the MODIFY DIRECTRY command or a resource that is subordinate to the resource named on the command.

- If *resourcename* is the same as the name specified on the ID operand, then *resourcename* is not known to the APPN directory.
- If *resourcename* is not the same as the name specified on the ID operand, then the name specified on the ID operand is a CDRSC major node. VTAM is in the process of changing the owning CP or network node server for all the minor nodes subordinate to the CDRSC major node. The *resourcename* minor node is no longer known to the APPN directory.

System Action: Processing continues.

Operator Response:

- If *resourcename* is the same as the name specified on the ID operand of the MODIFY DIRECTRY command, ensure that you entered *resourcename* correctly.
- If *resourcename* is not the same as the name specified on the ID operand of the MODIFY DIRECTRY command, then no further action is needed.

Programmer Response: None.

Chapter 8. IST messages for VTAM network operators IST1200I – IST1599I

This chapter lists the VTAM messages beginning with IST in the range of IST1200I through IST1599I. These messages can appear on a network operator's console.

See Appendix E, "Message text for VTAM operator messages" on page 769 for a list of the text of all VTAM operator messages.

Note: Messages that begin with the prefix **ISTF** are issued by the VTAM dump analysis tool and the VTAM internal trace (VIT) analysis tool. Help information is available as a part of each tool by pressing F1. Therefore, **ISTF** messages are not documented in *z/OS Communications Server: SNA Messages*. See *z/OS Communications Server: SNA Diagnosis Vol 1, Techniques and Procedures* for additional information.

IST1200I *tsouserid* **TSO USERID, TRACE = {ON|OFF}**

Explanation: VTAM issues this message as part of a message group in response to one of the following commands:
- DISPLAY TRACES, TYPE=TSO,ID=*tsouserid*
- DISPLAY TRACES, TYPE=TSO,ID=*
- DISPLAY TRACES, TYPE=ALL

This message indicates whether the TSO trace for *tsouserid* is active or inactive.
- For DISPLAY TRACES, TYPE=TSO,ID=*tsouserid* and DISPLAY TRACES, TYPE=TSO,ID=*, the following message group is displayed:

```
IST350I  DISPLAY TYPE = TRACES,TYPE=TSO
IST1200I tsouserid TSO USERID, TRACE = {ON|OFF}
:
IST314I  END
```

- For DISPLAY TRACES, TYPE=ALL, VTAM issues additional messages displaying the output for TYPE=NODES, TYPE=TSO, and TYPE=VTAM.

  For additional information and examples of command displays, see the *z/OS Communications Server: SNA Operation*.

System Action: Processing continues.

Operator Response: None.

Programmer Response: None.

IST1201I COMMAND REJECTED BY ISTCMMND EXIT

Explanation: The user command verification exit (**ISTCMMND**) rejected the operator command. This message always refers to the command last entered. See *z/OS Communications Server: SNA Customization* for more information on the user command verification exit.

System Action: Processing continues.

Operator Response: Save the system log for problem determination.

Programmer Response: Ensure that the command issued was supposed to fail.
- If the command was programmed to fail, there is no action; the command and verification exit is working as designed.
- If the command was not programmed to fail, review the command and verification exit to ensure proper execution.

© Copyright IBM Corp. 1984, 2002

IST1202I VALUE *resourcename* **FOR** *operand* **IS NOT A VALID NAME**

Explanation: VTAM issues this message when the value *resourcename* of *operand* is not a valid resource name because it is syntactically incorrect. This message is issued in response to the following commands:
- DISPLAY APPLS
- DISPLAY CDRMS
- DISPLAY CDRSCS
- DISPLAY CLSTRS
- DISPLAY GROUPS
- DISPLAY LINES
- DISPLAY PENDING
- DISPLAY RSCLIST
- DISPLAY STATIONS
- DISPLAY STORUSE
- DISPLAY TERMS

System Action: If *operand* is **ID**, and at least one valid resource name has been specified, processing of the DISPLAY command will continue.

Operator Response: Ensure that you entered the command correctly. If problems persist, see *z/OS Communications Server: SNA Operation* for information on the correct syntax of DISPLAY commands.

Programmer Response: None.

IST1203I VALUE *resourcename* **FOR** *operand* **IS UNKNOWN RESOURCE**

Explanation: VTAM issues this message when the value *resourcename* of *operand* is a resource that is syntactically correct, but is not defined to VTAM. This message is issued in response to the following commands:
- DISPLAY APPLS
- DISPLAY CDRMS
- DISPLAY CDRSCS
- DISPLAY CLSTRS
- DISPLAY GROUPS
- DISPLAY LINES
- DISPLAY PENDING
- DISPLAY RSCLIST
- DISPLAY STATIONS
- DISPLAY TERMS
- MODIFY RTP

System Action: If *operand* is **ID**, and at least one valid resource name has been specified, processing of the DISPLAY or MODIFY command will continue.

Operator Response: Ensure that you entered the command correctly. If problems persist, save the system log and print the major node definition for problem determination.

Programmer Response: Add a definition statement for the major node of the resource. To use the new definition, you must deactivate and reactivate the major node. See the *z/OS Communications Server: SNA Resource Definition Reference* for more information on definition statements.

IST1204I VALUE *resourcename* **FOR** *operand* **NOT VALID FOR REQUEST**

Explanation: VTAM issues this message when the value *resourcename* for *operand* is a resource that is defined to VTAM, but cannot be specified for this particular command, operand, or configuration. This message is issued in response to the following commands:
- DISPLAY APPLS
- DISPLAY CDRMS
- DISPLAY CDRSCS
- DISPLAY CLSTRS
- DISPLAY ID=physical_unit
- DISPLAY GROUPS
- DISPLAY LINES
- DISPLAY PENDING
- DISPLAY STATIONS

- DISPLAY TERMS
- MODIFY RTP

System Action: If *operand* is **ID**, and at least one valid resource name has been specified, processing of the DISPLAY or MODIFY command will continue.

Operator Response: Ensure that you entered the command correctly. If problems persist, refer to *z/OS Communications Server: SNA Operation* for a description of the type of resources that are valid for the ID operand of the DISPLAY command you are using.

Programmer Response: None.

IST1205I MANAGEMENT SERVICES TRANSPORT UNAVAILABLE

Explanation: This message is the first in a group of messages that VTAM issues when the management services transport is not available.

The second message in the group indicates the reason that the management services transport is not available and can be one of the following:

IST1206I LOAD FAILED FOR THE PROGRAM-TO-PROGRAM INTERFACE
VTAM is unable to load the program-to-program interface module (CNMCNETV). This module is needed to send management services transport data to network management.

IST1207I NETWORK MANAGEMENT IS INACTIVE
VTAM is unable to use the management services transport because a network management application, such as the NetView program, is inactive.

IST1208I PROGRAM-TO-PROGRAM INTERFACE MODULE IS INACTIVE
VTAM is not able to send management services transport data to network management because the program-to-program interface module is not initialized.

IST1209I PROGRAM-TO-PROGRAM INTERFACE MODULE STORAGE SHORTAGE
VTAM is unable to send management services transport data to network management because the program-to-program interface module is out of storage.

System Action: Processing continues.

Operator Response:

IST1206I
Save the system log for problem determination.

IST1207I
Ensure that network management has been started. When network management connects to the network management interface module, then VTAM continues initialization for the Management Services Transport. Refer to your network management documentation for details on how to start network management.

IST1208I
Ensure that the program-to-program interface module has been initialized. VTAM will continue trying to connect to the program-to-program interface module repeatedly for the first hour, and then once every hour. Refer to your program-to-program interface documentation for details on how to initialize the interface module.

IST1209I
Save the system log for problem determination.

Programmer Response:

IST1206I
Ensure that the program-to-program interface module CNMCNETV resides in LPALIB. You must restart VTAM to use the management services transport.

IST1207I
None.

IST1208I
None.

IST1209I
You might need to increase the buffer queue limit for the program-to-program interface module. Refer to your program-to-program interface documentation for more details.

IST1206I LOAD FAILED FOR THE PROGRAM-TO-PROGRAM INTERFACE

Explanation: VTAM issues this message as part of a group of messages when the management services transport is not available. The first message in the group is IST1205I. See the explanation of that message for a complete description.

IST1207I NETWORK MANAGEMENT IS INACTIVE

Explanation: VTAM issues this message as part of a group of messages when the management services transport is not available. The first message in the group is IST1205I. See the explanation of that message for a complete description.

IST1208I PROGRAM-TO-PROGRAM INTERFACE MODULE IS INACTIVE

Explanation: VTAM issues this message as part of a group of messages when the management services transport is not available. The first message in the group is IST1205I. See the explanation of that message for a complete description.

IST1209I PROGRAM-TO-PROGRAM INTERFACE MODULE STORAGE SHORTAGE

Explanation: VTAM issues this message as part of a group of messages when the management services transport is not available. The first message in the group is IST1205I. See the explanation of that message for a complete description.

IST1211I I/O ERROR *terminalname command ncp_response*[*bsc_status*]

Explanation: VTAM issues this message when an I/O error occurred on a BSC 3270 terminal or control unit. This is probably a hardware error.

terminalname is the name of a terminal or control unit. If the network where the resource resides is known to VTAM, *terminalname* is issued as a network-qualified name in the form *netid.name*.

command is the basic transmission unit (BTU) command and modifier. It represents the command that the NCP received when the I/O error occurred. For more information, see *NCP and EP Reference Summary and Data Areas* for the 3725 and 3745.

ncp_response is the system and extended response that the NCP sends upon receiving the command. For more information, see *NCP and EP Reference Summary and Data Areas* for the 3725 and 3745.

bsc_status is the BSC status information. For more information, see the *3174 Functional Description*

System Action:

- For an I/O error on a BSC 3270 terminal, VTAM sends an error indication to the application program.
- For an I/O error on a BSC 3270 control unit, VTAM may resume polling for the data from the control unit.

Operator Response: If the problem persists, save the system log for problem determination.

Programmer Response: Correct the problem as determined by the problem determination output.

IST1212I {ACBNAME|LUNAME} = *nodename* **STATUS =** *status*

Explanation: This message is part of a group of messages that VTAM issues in response to a DISPLAY TSOUSER command. A complete description of the message group follows:

```
IST075I  NAME = nodename, TYPE = TSO USERID
IST486I  STATUS = currentstatus, DESIRED STATE = desiredstate
IST576I  TSO TRACE = {ON|OFF}
IST1212I ACBNAME = nodename STATUS = status
IST1212I LUNAME = nodename STATUS = status
IST314I  END
```

IST075I

This message displays the name of the TSO user ID associated with the application and the logical unit (LU).

IST486I

This message indicates the current status of the TSO user ID and the state that is desired. If VTAM cannot determine the desired state, *desiredstate* will be *****NA*****.

IST576I

This message indicates whether the TSO trace is on or off for a particular TSO user.

IST1212I

This message appears twice in the group:

– With **ACBNAME** displaying the application status *status* of the application name *nodename* with which the TSO user ID is associated

– With **LUNAME** displaying the status *status* of the logical unit *nodename*.

If the network where the resource resides is known to VTAM, *nodename* is issued as a network-qualified name in the form *netid.name*.

See the *z/OS Communications Server: IP and SNA Codes* for a description of *status*.

If the TSO user ID has been disconnected from the LU, the LU *status* will still be **ACT/S** (active and in session) if it is in session with another application. To find the LU's session partner, enter a DISPLAY ID command for the logical unit *nodename*.

System Action: Processing continues.

Operator Response: None.

Programmer Response: None.

IST1213I *profilename* **LU-LU VERIFY ERROR** *code*

Explanation: VTAM issues this message when an LU 6.2 application program requests that a session be established, but a session level LU-LU verification violation or error occurred.

profilename is the name of the security manager profile defined for the LU pair. The format of *profilename* is *local_netid.local_name.partner_netid.partner_name* where:

local_netid is the local network ID

local_name is the ACB name of the local application program

partner_netid is the network ID of the session partner

partner_name is the LU name of the session partner.

code is the type of security violation that occurred.

03 The security manager locked the profile.

04 The profile contains an invalid session key.

05 *partner_name* rejected the session due to a security related error.

06 *local_name* was defined with REQUIRED session level LU-LU verification, but one of the following occurred:
- *local_name* is the PLU, but no password was defined for *profilename*.
- *partner_name* is the PLU requesting a session without using session level LU-LU verification.

07 Session level LU-LU verification data for the session between *local_name* and *partner_name* matched the data for an outstanding session activation request.

08 *local_name* was defined with optional verification, and a password was defined for *profilename*, indicating that session level LU-LU verification is necessary. *partner_name* requested a session without verification.

09 *local_name* was defined with optional verification, and no password was defined for *profilename*, indicating that session level LU-LU verification should not be used. *partner_name* requested a session with verification.

0B The profile was changed during session activation.

IST1214I

0C The password for the profile has expired.

0D *local_name* was defined to use only the enhanced protocol (SECLVL=LEVEL2 is specified on the APPL definition statement). *partner_name* does not support the enhanced protocol.

20 The security manager component is either not available or overloaded (received a large number of requests in a short period of time).

3C The security manager component failed.

System Action: Session activation failed.

Operator Response:

For codes **03, 04, 0B**, and **0C**, enter the MODIFY PROFILES command for the local LU. If VTAM issues this message repeatedly, notify the security administrator of *code* and *profilename*.

For code **05**, consult message IST970I or message IST1213I issued to the partner LU for specific actions.

For codes **06, 08**, and **09**, enter the MODIFY PROFILES command for the local LU. If VTAM issues this message repeatedly, save the system log for problem determination.

For codes **07** and **0D**, notify the security administrator of *code* and *profilename*.

For codes **20** and **3C**, save the system log for problem determination.

Programmer Response:

For code **05**, consult message IST970I or message IST1213I issued to the partner LU for specific actions.

For codes **06**, **08**, and **09**, check the VERIFY operand specified on the APPL statements to identify the correct level for the two LUs.

For code **20**, verify that the security manager is installed and resource class APPCLU is active.

If the security manager is installed and resource class APPCLU is active, the problem may be that the security manager is overloaded. Lowering the value of AUTOSES on the LU definition statements may solve the problem.

For code **3C**, verify that the security manager is installed and resource class APPCLU is active.

IST1214I FFST *text*

Explanation: VTAM attempted to establish an interface to and was unsuccessful. The failure is related to the FFST™ installation on the operating system.

text is one of the following:

SUBSYSTEM IS NOT INSTALLED
The FFST Subsystem is not installed on your operating system. VTAM can be initialized without it.

INITIALIZATION MODULE IS NOT FOUND
The FFST initialization module, EPWINIT, could not be found in an accessible library. The FFST subsystem may or may not be installed on your system. VTAM initializes without it.

INTERFACE MODULE IS NOT FOUND
The FFST Subsystem is installed but the interface module cannot be found.

VTAM CONFIGURATION MODULE IS NOT FOUND
The FFST Subsystem is installed but the VTAM configuration module cannot be found.

System Action: VTAM initialization continues, but FFST will not be available to support VTAM diagnostics.

Operator Response: Save the system log for problem determination.

Programmer Response: Determine whether FFST support is desired for VTAM. If so, then verify that ISTRACZF was installed during VTAM installation.

You must restart VTAM if FFST support is desired for diagnosis.

IST1215I ERROR IN START LIST *list* **–** *reason*

Explanation: VTAM issues this message when an error occurs while processing the start list *list*.

list is the start option list that contains the error.

reason can be one of the following:

I/O ERROR
An error occurred while reading the start list *list*.

MEMBER NOT FOUND
The start list *list* could not be found in the VTAM definition library.

START OPTION NOT VALID
There is an error in a start option.

SYNTAX ERROR
The start list *list* contains invalid syntax.

System Action: This message is followed by either message IST1216A or message IST1084I.

- Message IST1216A prompts you for a response, and VTAM will wait for a reply.
- Message IST1084I indicates whether VTAM defaults, ATCSTR00, or a specific start list will be used. Processing continues.

Operator Response: If prompted by message IST1216A, enter 1, 2, or 3. Otherwise, no response is needed.

Programmer Response:

I/O ERROR
Refer to the applicable sequential access method documentation for more information.

MEMBER NOT FOUND
Message IST116I is issued prior to this message. See the explanation of that message for additional information.

START OPTION NOT VALID
There are several messages that may be issued prior to this message depending on the reason for the problem. Possible messages include IST057I, IST058I, IST059I, IST092I, IST176I, IST652I, IST1052-1056I, IST1064I, and IST1069I-1078I. See the explanation of the appropriate message(s) for additional information.

SYNTAX ERROR
MessageIST052I, IST115I or IST1249I is issued prior to this message. See the explanation of the appropriate message for additional information.

IST1216A ENTER 1 TO CONTINUE–2 TO REENTER LIST–3 TO TERMINATE VTAM

Explanation: VTAM issues this message when an error occurs in a start list. Message IST1215I is issued prior to this message and indicates the name of the start list and the reason for the failure. See that message for additional information.

System Action: VTAM waits for a response.

- If **1** is entered, VTAM will continue processing. The *reason* in message IST1215I determines the action.

  I/O ERROR
  The start list is not processed.

  MEMBER NOT FOUND
  All start options in the list are ignored.

  START OPTION NOT VALID
  Valid start options in the list are processed, and message IST1311A is issued to prompt for new start options.

  SYNTAX ERROR
  All start options processed before the syntax error is encountered are processed. Message IST1311A is issued to prompt for new start options.
- If **2** is entered, VTAM issues message IST015A to prompt for a new start list ID.
- If **3** is entered, all processing is stopped and VTAM is terminated.

Operator Response: Enter 1, 2, or 3.

1 to continue

2 to reenter a new start list ID when prompted by IST015A

3 to terminate VTAM.

Programmer Response: None

IST1217A RESPONSE NOT VALID: REENTER 1, 2, OR 3

Explanation: VTAM issues this message when 1, 2, or 3 is not entered in response to message IST1216A. See the explanation of that message for additional information.

IST1218I ACB ERROR FIELD = *acberflg*

Explanation: VTAM issues this message as part of a group of messages when VTAM is terminated because an access method control block (ACB) macro failed. The first message in the group is IST049I. See the explanation of that message for a complete description.

IST1219I RTNCD = *rtncd*, **FDB2 =** *fdb2*

Explanation: VTAM issues this message as part of a group of messages when an APING transaction failed or VTAM is terminated because a SETLOGON macro failed. The first message in the group is IST049I or IST1472I. See the explanation of those messages for a complete description.

IST1220I SSCPNAME NETID CURRENT STATE ROUTING STATUS

Explanation: VTAM issues this message as part of a message subgroup. The first message in the subgroup is IST611I. See the explanation of that message for a complete description.

IST1221I *chtyp* **DEV =** *device_address* **STATUS =** *status* **STATE =** *system_state*

Explanation: VTAM issues this message as part of a message group in response to:

- A DISPLAY ID command to identify the operational status of all **READ** and **WRITE** subchannels.
- A DISPLAY ID command for an MPC line or a transport resource list entry (TRLE).
- A DISPLAY TRL command for an active TRL entry.

For subarea MPC subchannels, only the ONLINE or OFFLINE states are displayed.

The message group will vary if the TRLE is for an IBM OSA-Express Adapter. If the message group is for a TRLE not representing an OSA-Express Adapter, the message group will look as follows:

```
 IST075I  NAME = nodename, TYPE = LINE
 IST087I  TYPE = line_type, CONTROL = line_control, HPDT = hpdtvalue
 IST1715I MPCLEVEL = mpc_level MPCUSAGE = mpc_usage
 IST1716I PORTNAME = port_name LINKNUM = N/A
 IST1717I ULPID = ulp_id
[IST1814I IQDIO ROUTING ENABLED]
[IST1815I IQDIO ROUTING DISABLED]
 IST134I  GROUP = groupname, MAJOR NODE = nodename
 IST486I  STATUS = currentstatus, DESIRED STATE = desiredstate
[IST1577I  HEADER SIZE = hpsize DATA SIZE = dsize STORAGE = storage]
 IST1221I chtyp DEV = device_address STATUS = status STATE = system_state
:
 IST924I  ------------------------------------------------------------
[IST1577I  HEADER SIZE = hpsize DATA SIZE = dsize STORAGE = storage]
[IST1221I chtyp DEV = device_address STATUS = status STATE = system_state]
:
 IST314I  END
```

Note: VTAM displays all **WRITE** subchannel addresses for *nodename*, followed by all **READ** subchannel addresses for *nodename*. For TCP/IP channel DLC connections, there is only one **R/W** subchannel.

If the message group is for a TRLE representing an IBM OSA-Express Adapter, the message group will look as follows:

```
 IST075I  NAME = nodename, TYPE = LINE
 IST087I  TYPE = line_type, CONTROL = line_control, HPDT = hpdtvalue
 IST1715I MPCLEVEL = mpc_level MPCUSAGE = mpc_usage
 IST1716I PORTNAME = port_name LINKNUM = link_num OSA CODE LEVEL = code_level
 IST134I  GROUP = groupname, MAJOR NODE = nodename
 IST486I  STATUS = currentstatus, DESIRED STATE = desiredstate
[IST1577I  HEADER SIZE = hpsize DATA SIZE = dsize STORAGE = storage]
 IST1221I chtyp DEV = device_address STATUS = status STATE = system_state

:
 IST924I  ------------------------------------------------------------
[IST1577I  HEADER SIZE = hpsize DATA SIZE = dsize STORAGE = storage]
[IST1221I chtyp DEV = device_address STATUS = status STATE = system_state]
:
[IST1221I DATA  DEV = device_address STATUS = status STATE = system_state]
[IST1717I ULPID = ulp_id]
PRIORITYx: congstate  PRIORITYx: congstate
PRIORITYx: congstate  PRIORITYx: congstate
:
 IST314I  END
```

Note: VTAM displays all **WRITE** subchannel addresses for *nodename*, followed by all **READ** subchannel addresses for *nodename*, followed by all **DATA** subchannel addresses. DATA subchannel addresses are only displayed for an OSA-Express TRLE. For each DATA subchannel address that is currently being used by a Upper Layer Protocol (ULP), the name of the z/OS CS upper-layer protocol (ULP) (for example, the TCP/IP procedure name) using that data subchannel will be displayed.

A complete description of the message group follows:

IST075I

nodename is the name of the resource that was entered on the DISPLAY ID command.

Node type is always **LINE** for this message group.

IST087I

line_type is always **LEASED** for this message group.

line_control is always **MPC** (multipath channel) for this message group.

hpdtvalue can have one of the following values:

YES
: Indicates the connection is capable of performing channel I/O directly to or from communications storage manager (CSM) buffers.

NO
: Indicates the connection is not capable of performing channel I/O directly to or from communications storage manager (CSM) buffers.

NA
: Is displayed when the connection is not active.

IST134I

groupname is the name of the line group to which the *nodename* displayed in IST075I belongs.

nodename in this message is the name of the major node for the line.

IST486I

currentstatus is the current status of the node. See the *z/OS Communications Server: IP and SNA Codes* for status information.

desiredstate is the node state that is desired. See the *z/OS Communications Server: IP and SNA Codes* for status information. If VTAM cannot determine the desired state, *desiredstate* is *****NA*****.

IST1221I

IST1221I

chtyp is the type of subchannel and can be **READ, WRITE, R/W, or DATA**.

device_address is the hexadecimal address of the subchannel that is displayed.

status is the condition or state of the subchannel that is displayed. Possible values include the following:

ACTIVE
: Subchannel is active.

INOP Subchannel path is inoperative.

RESET Subchannel path is not ready.

SLOWDN
: Subchannel path is in slowdown.

ACTPEND
: DLC is in the process of activation.

OPEN.PEND
: DLC is in the process of opening a connection.

IDX.PEND
: DLC is in the process of IDXINIT for a DATA channel.

START.PEND
: DLC is in the process of starting data flow for a connection.

INACT.PEND
: DLC is in the process of deactivation.

system_state can be one of the following:

ONLINE
: An MVS VARY ONLINE command for the subchannel has completed successfully and the channel is now available for use.

OFFLINE
: An MVS VARY OFFLINE command has been issued for the subchannel and the command has completed successfully. The subchannel is no longer available for use.

PEND_OFFLINE
: An MVS VARY OFFLINE command has been issued for the subchannel and the subchannel is in the process of completing the command.

N/A The *system_state* cannot be known for DATA subchannel addresses.

The *system_state* is an internal state used by VTAM to manage the AHHC subchannels. VTAM uses it to determine if the AHHC connection is using the subchannel. It does not represent the MVS status of the subchannel. If the MVS status of the AHHC subchannel is required, use the MVS display command (for example, D U,,,xxx).

IST1577I

This message is displayed only when HPDT=YES in message IST087I. This message is not displayed if the TRLE is IUTSAMEH, the TRLE for same-host communication.

hpsize is the MPC header segment size, in bytes.

dsize is the maximum MPC data segment size, in kilobytes.

storage indicates the storage medium that is used for inbound data (on READ subchannels) and can have one of the following values:

ECSA
: An extended common service area buffer provided by the communications storage manager (CSM).

DATASPACE
: A data space buffer provided by the communications storage manager (CSM).

*****NA*****
: Not applicable. This value is issued for WRITE subchannels.

IST1715I

mpc_level indicates the level of MPC connection, and can be one of the following:

HPDT
: Indicates that the connection is capable of performing channel I/O directly to or from communications storage manager (CSM) buffers.

NOHPDT
: Indicates that the connection is not capable of performing channel I/O directly to or from communications storage manager (CSM) buffers.

QDIO
(Queued Direct I/O) Indicates that the connection performs channel I/O operations using direct IO instead of CCW channel operations. An MPCLEVEL of QDIO implies the connection is also HPDT capable, and can therefore perform the direct IO to or from communications storage manager (CSM) buffers.

mpc_usage indicates whether the MPC connection can be used exclusively by only one Upper Layer Protocol (ULP), or shared by multiple ULPs. It can be one of the following:

SHARE
Indicates that the connection can be shared by multiple ULPs.

EXCLUSIVE
Indicates that the connection can only be used by the first ULP that requests usage of the MPC connection.

IST1716I

This message is displayed only for TRLEs representing an IBM OSA-Express Adapter or an IBM Open Systems Adapter used for native access to an ATM network.

port_name is the port name to be assigned to the port on the IBM Open Systems Adapter. Each IBM Open Systems Adapter has one *port_name* that is represented by one TRLE.

link_num indicates the relative adapter number of the OSA-Express Adapter port represented by this TRLE. For an IBM Open Systems Adapter used for native access to an ATM network, the *link_num* will be N/A.

code_level indicates the OSA processor code level of the OSA-Express. For some versions of OSA-Express, *code_level* will be N/A. For detailed instructions about setting up an OSA-Express feature, refer to the *S/390: OSA-Express Customer's Guide and Reference*.

IST1717I

This message is displayed for all TRLEs that are currently being used by at least one Upper-layer Protocol (ULP). A separate IST1717I message will be displayed for each ULP using this TRLE. For a dynamic TCP TRLE, or an exclusively owned TRLE, only one message with ULPID will be issued, since there can only be one ULP using each of these TRLEs. For an OSA-Express Adapter, one message with ULPID will be issued for each Datapath channel address in use by a ULP. For other TRLEs, more than one ULPID message may be issued, depending on how many upper-layer protocols are using the TRLE.

ulp_id specifies the name of a CS OS/390 upper-layer protocol (ULP) that is using the TRLE or using one of the datapath channels of an OSA-Express TRLE.

- For TCP/IP ULPs, the *ulp_id* will be the jobname.
- For ANNC ULPs, the *ulp_id* will be the SNA PU name.
- For ATM or EE ULPs, the *ulp_id* will be the XCA major node name.

IST1757I

This message is part of several message groups that VTAM issues in response to DISPLAY ID or DISPLAY TRL commands. This message will appear for a TRLE representing an OSA-Express Adapter.

x specifies the write priority level.

congstate specifies the congestion state of that priority level. *congstate* will be **CONGESTED** when, at least once within the last congestion reporting window, all 128 writes for the priority level were unavailable. Otherwise *congstate* will be **UNCONGESTED**.

IST1814I

This message indicates that the Upper Layer Protocol (ULP) using the datapath channel of an OSA-Express TRLE is performing iQDIO routing. The iQDIO routing table may then be displayed by a DISPLAY TCPIP NETSTAT ROUTE command for that particular TCP/IP stack. For details on how to display the iQDIO Routing table, refer to the *z/OS Communications Server: IP User's Guide and Commands*.

IST1815I

This message indicates that the Upper Layer Protocol (ULP) using the datapath channel of an OSA-Express TRLE is not performing iQDIO routing.

System Action: Processing continues.

Operator Response: None.

Programmer Response: None.

IST1222I **{WRITE|READ|DATA} DEVICE** *device_address* **IS INOPERATIVE, NAME IS** *resource_name*

Explanation: VTAM issues this message when a **WRITE**, **READ**, or **DATA** path to or from an adjacent subarea is no longer active. It provides information about potential problems and may be issued prior to the deactivation of a line.

device_address is the hexadecimal address of the **WRITE**, **READ**, or **DATA** subchannel that is displayed.

resource_name is either:

- The name of a leased line defined for a type 5 physical unit.
- The name of an element in the active transport resource list, also called a TRLE name.

System Action: Processing continues.

Operator Response:

- If *resource_name* is a transport resource list element (TRLE) name, you might want to deactivate the resource that is using this TRLE, and then activate the resource again. If *resource_name* is a line, you might want to take the line down and restart the line. If *resource_name* is neither a TRLE name or a line, no action is necessary. Note that the efficiency of data transfer might be affected.
- If the inoperative subchannel path is critical to your network, save the system log for problem determination.
  - Message IOS000I or other related messages may be issued and can provide additional information.
  - If there are no available paths and the line is deactivated, VTAM issues additional error messages. Also check for messages on the console log of the VTAM on the other side of the multipath channel.
- Check for any FFST probe output. See the *z/OS Communications Server: SNA Diagnosis Vol 2, FFST Dumps and the VIT* for information about FFST and for a description of FFST probes.
- Run your operating system service aid program to determine if MDR/OBR information has been recorded. See the *EREP User's Guide and Reference* for more information on using EREP.
- If you use a network management application such as the NetView program, check to see whether an alert was recorded for this problem.

Programmer Response: If the output does not indicate a hardware problem, and you cannot determine the cause of the problem, take the following actions:

- If you have access to IBMLink, search for known problems in this area. If no applicable matches are found, report the problem to IBM by using the Electronic Technical Report (ETR) option on IBMLink.
- If you do not have access to IBMLink, report the problem to the IBM software support center.

  If available, provide the MDR/OBR information from your operating system service aid program or the alert information recorded by your network management application.

IST1223I **BN NATIVE TIME LEFT LOCATE SIZE**

Explanation: VTAM issues this message as part of a group of messages in response to a DISPLAY TOPO command. See message IST1295I for a complete description of possible message groups.

IST1224I *bn native time_left locate_size*

Explanation: VTAM issues this message as part of a group of messages in response to a DISPLAY TOPO command. See message IST1295I for a complete description of possible message groups.

IST1225I **VIRTUAL NODE** *nodename* **CONNECTION INACTIVE**

Explanation: VTAM issues this message in response to a VARY INACT for a line when the logical connection with the virtual node becomes inactive.

nodename is the name of the virtual node.

System Action: Processing continues.

Operator Response: None.

Programmer Response: None.

IST1226I TOPOLOGY UPDATE FAILED, INSUFFICIENT STORAGE

Explanation: This message is part of a group messages that VTAM issues in response to a VARY ACT for a line when the activation of the logical connection to the virtual node fails. The failure occurred because the topology update for the active logical connection failed due to insufficient storage. The first message in the group is IST1166I or IST1167I. See the explanation of those messages for a complete description.

IST1227I *id value* **=** *description*

Explanation: VTAM issues this message as part of a group of messages in response to a DISPLAY STATS command. See the explanation of IST1345I for a complete description of the message group.

IST1228I *command* **FOR** *resourcename* **FAILED, CODE =** *code*

Explanation: VTAM issues this message in response to a MODIFY DIRECTRY,UPDATE command which attempted to change the owning CP or the network node server for *resourcename*. The name specified for either the CPNAME or NETSRVR operand is not consistent with the information found in the APPN directory.

command is always **F DIRECTRY** which refers to the MODIFY DIRECTRY,UPDATE command.

resourcename is the network-qualified name of the resource in the form *netid.name*. *resourcename* can be the same resource that you entered on the ID operand of the MODIFY DIRECTRY,UPDATE command or a resource that is subordinate to the resource named on the command.

The following list of values for *code* describes the failure:

Code	Error
1	*resourcename* was identified in the APPN directory as a network node. Attempting to change the owning CP or network node server of a network node is not valid.
2	*resourcename* was identified in the APPN directory as an end node and the CPNAME operand was specified on the MODIFY DIRECTRY,UPDATE command. Attempting to change the owning CP of an end node is not valid.
3	*resourcename* was identified as a non-control point in the APPN directory and the CPNAME operand was not specified on the MODIFY DIRECTRY,UPDATE command. When *resourcename* is a non-control point, the CPNAME operand is required to identify the resource's owning control point (CP).

System Action: The hierarchy for *resourcename* is not updated. Other processing continues.

Operator Response: Use the DISPLAY ID command to obtain the current type of *resourcename*. Then, reenter the MODIFY DIRECTRY,UPDATE command with the proper operands specified. See the *z/OS Communications Server: SNA Operation* for more information on the MODIFY DIRECTRY command.

Programmer Response: None

IST1229I *command* **FAILED,** *resourcename* **IS NOT A {CP|EN|NN}**

Explanation: VTAM issues this message in response to a MODIFY DIRECTRY,UPDATE command for **one** of the following reasons:

- The MODIFY DIRECTRY,UPDATE command included the operand CPNAME=*resourcename* which attempted to specify *resourcename* as a **CP** (control point). *resourcename* is not identified as a **CP** in the APPN directory.
- The MODIFY DIRECTRY,UPDATE command included the operands CPNAME=*resourcename* and NETSRVR=*name* which indicates that *resourcename* is a **EN** (end node). *resourcename* is not identified as a **EN** in the APPN directory.
- The MODIFY DIRECTRY,UPDATE command included the operand NETSRVR=*resourcename* which attempted to specify *resourcename* as a **NN** (network node). *resourcename* is not identified as a **NN** in the APPN directory.

command is always **F DIRECTRY** which refers to the MODIFY DIRECTRY,UPDATE command.

IST1230I

resourcename is the network-qualified name specified on either the CPNAME operand or the NETSRVR operand, in the form *netid.name*.

System Action: VTAM ignores the MODIFY DIRECTRY,UPDATE command. Other processing continues.

Operator Response: Verify that *resourcename* is spelled correctly, and reenter the command.

Enter the DISPLAY ID command to verify the current type of *resourcename*. If *resourcename* is expected to be either a control point or a network node, save the system log for problem determination.

Programmer Response: You can change the type of *resourcename* type in the APPN directory with the following actions:

- Enter the MODIFY DIRECTRY,DELETE,ID=*resourcename* command.
- Change *resourcename's* type in the definition list and activate the list.
- Reenter the MODIFY DIRECTRY,UPDATE command with either the CPNAME or NETSRVR operand, depending upon the desired result.

IST1230I TIME = *time* **DATE =** *date* **ID =** *id*

Explanation: This message is the first in a group of messages that displays tuning statistics.

If message IST1505I appears in the display, see that message for a complete description of the message group for XCF connections.

If message IST1613I appears in the display, see that message for a complete description of the message group for TCP/IP resources.

A complete description of the message group for other connections follows.

```
IST1230I TIME     = time     DATE     = date     ID = id
IST1231I IPDU     = ipdu     OPDU     = opdu
IST1569I INLP     = inlp     ONLP     = onlp
IST1232I TSWEEP   = tsweep   QSWEEP   = qsweep
IST924I  ----------------------------------------------------------
IST1233I DEV      = dev      DIR      = dir
IST1234I BSIZE    = bsize    MAXBYTES = maxbytes
IST1235I SIO      = sio      SLOWDOWN = slowdown
IST1236I BYTECNTO = bytecnto BYTECNT  = bytecnt
IST1810I PKTIQDO  = pktiqdo  PKTIQD   = pktiqd
IST1811I BYTIQDO  = bytiqdo  BYTIQD   = bytiqd
IST1812I PKTIQEO  = pktiqeo  PKTIQE   = pktiqe
IST1813I BYTIQEO  = bytiqeo  BYTIQE   = bytiqe
IST1570I NBYTECTO = nbytecto NBYTECT  = nbytect
IST1719I PCIREALO = pcirealo PCIREAL  = pcireal
IST1720I PCIVIRTO = pcivirto PCIVIRT  = pcivirt
IST1721I SBALCNTO = sbalcnto SBALCNT  = sbalcnt
IST1722I PACKCNTO = packcnto PACKCNT  = packcnt
IST1723I SIGACNTO = sigacnto SIGACNT  = sigacnt
IST1750I PCITHRSO = pcithrso PCITHRSH = pcithrsh
IST1751I PCIUNPRO = pciunpro PCIUNPRD = pciunprd
IST1752I RPROCDEO = rprocdeo RPROCDEF = rprocdef
IST1753I RREPLDEO = rrepldeo RREPLDEF = rrepldef
IST1754I NOREADSO = noreadso NOREADS  = noreads
IST1755I SBALMAX  = sbalmax  SBALAVG  = sbalavg
IST1756I QDPTHMAX = qdpthmax QDPTHAVG = qdpthavg
:
IST314I  END
```

This message group displays tuning statistics for all subchannel addresses for linename *id*. Messages IST924I through and including IST1756I are repeated for each subchannel address. Only those messages applicable to the resource type will appear.

Many of the messages in this group contain both a count and an overflow. Both the count and overflow are maintained in unsigned 32 bit variables (unless otherwise indicated). Since an unsigned 32 bit variable can only contain a value

up to and including 4294967295 ('FFFFFFFF'X), the variable will wrap through 0 if an increment results in exceeding this value. When such a wrap occurs the overflow is incremented by 1. Therefore the total count is determined as follows:

```
Total = (overflow * 4294967296) + count
```

Note: Within the context of the QDIO (Queued Direct IO) interface, a single DATAPATH subchannel address represents both read and write DMA (Direct Memory Access) based data transfer points. In addition, the write transfer point is comprised of multiple priority levels (sometimes referred to as queues). For QDIO DATAPATH subchannel addresses, this sequence of messages is repeated for each data transfer point or priority level.

IST1230I

time is the time when the record was reported, in the form hh:mm:ss:pp, where:
- *hh* is the hour
- *mm* is the minutes
- *ss* is the seconds
- *pp* is hundredths of a second.

date is the date that the record was reported. The format of *date* is based on the DATEFORM start option and is one of the following:

DATEFORM|DATEFRM=DMY
date is **DD/MM/YY**.

DATEFORM|DATEFRM=MDY (default)
date is **MM/DD/YY**.

DATEFORM|DATEFRM=YMD
date is **YY/MM/DD**.

id is the name of the link for which tuning statistics are being recorded. The link name is from one of the following sources...
- The name specified on the LINE definition statement in the associated channel-attached major node.
- The name specified on the TRLE definition statement in the TRL definition deck.
- An internally generated TRLE name.

IST1231I

ipdu is the total number of inbound PDUs received.

opdu is the total number of outbound PDUs transmitted.

IST1232I

tsweep is the number of sweeps initiated as a result of a time-out. A sweep is a special data block that is exchanged with the adjacent host to verify that data has not been lost. Only the host with the highest subarea number will initiate timer sweeps.

qsweep is the number of sweeps initiated as a result of excessive receive queue depth.
- Receive queue depth represents the number of bytes of data waiting to be passed to the next layer.
- Excessive receive queue depth usually indicates a problem with reserialization of the data segment. Possible causes are a mismatch in the speed of the read subchannels or a lack of available I/O buffers.

IST1233I

dev is the hexadecimal subchannel address of the device for which tuning statistics are being recorded. It corresponds to one of the addresses coded on the READ, WRITE, or DATAPATH statement on the LINE or TRLE definition statement.

dir is the direction of this resource (**READ**, **WRITE**, or **WR/x** (where **x** is the QDIO write priority level)).

IST1234I

bsize is the maximum buffer size supported by this device.

maxbytes is the number of bytes used in the largest channel program. This field provides information about the utilization or packing of data into the transmit or receive buffer. As this number approaches *bsize*, this indicates that maximum instantaneous utilization of the device's buffer has occurred.

IST1230I

IST1235I

sio is the number of start I/O operations counted for the subchannel. This number is reset each time VTAM reports tuning statistics and is expressed in decimal. The value of *sio* is never larger than 65535. If *sio* is 65535, its value is reset to 0 when the next start I/O operation takes place.

slowdown is the number of times slowdown mode has been entered. If *slowdown* is incrementing, this indicates a lack of available I/O buffers.

– If **DIR = READ** in message IST1233I, *slowdown* is incremented every time the channel program cannot be reinitiated immediately because of a lack of I/O buffers to unpack the inbound data.

– If **DIR = WRITE** in message IST1233I, *slowdown* is ****N/A****.

IST1236I

bytecnto is PDU byte count overflow.

bytecnt is byte count. This value represents the accumulated number of bytes of PDUs transmitted on the **WRITE** subchannel or received on the **READ** subchannel.

IST1569I

inlp is the total number of inbound NLPs received.

onlp is the total number of outbound NLPs transmitted.

IST1570I

nbytecto is NLP byte count overflow.

nbytect is the NLP byte count. This value represents the accumulated number of bytes of NLPs transmitted on the **WRITE** subchannel or received on the **READ** subchannel.

IST1719I

pcirealo is real PCI (Program Controlled Interrupt) overflow.

pcireal is real PCI count. This value represents the accumulated number of real PCI interrupts fielded by the QDIO Program-Controlled Interrupt Exit for the QDIO **READ** data transfer point.

A real PCI is an execution of the QDIO Program-Controlled Interrupt Exit as a result of a call from the system interrupt handler. The higher the ratio of real PCI to virtual PCI, the less successful QDIO is at avoiding the overhead of the system interrupt handler.

IST1720I

pcivirto is virtual PCI overflow.

pcivirt is virtual PCI count. This value represents the accumulated number of virtual PCI interrupts fielded by the QDIO Program-Controlled Interrupt Exit for the QDIO **READ** data transfer point.

A virtual PCI is an execution of the QDIO Program-Controlled Interrupt Exit as a result of a call from the QDIO device driver. The higher the ratio of virtual PCI to real PCI, the more successful QDIO is at avoiding the overhead of the system interrupt handler.

IST1721I

sbalcnto is SBAL (Storage Block Address List) count overflow.

sbalcnt is SBAL count. This value represents the accumulated number of SBALs used for I/O on the QDIO **WRITE** priority level or the QDIO **READ** data transfer point.

An SBAL serves a similar function in QDIO that an IDAW (Indirect-Data-Address Word) list serves in traditional I/O.

IST1722I

packcnto is packet count overflow.

packcnt is packet count. This value represents the accumulated number of packets transmitted on the QDIO **WRITE** priority level or received on the QDIO **READ** data transfer point.

A packet is a single unit of data as presented to the QDIO device driver (for example, a datagram or TCP packet).

IST1723I

sigacnto is SIGA (Signal Adapter) count overflow.

sigacnt is SIGA count. This value represents the accumulated number of SIGA instructions issued for the QDIO **WRITE** priority level.

SIGA tells the QDIO adapter that data is ready to be written. This count will not directly correlate with the data rate as QDIO employs a tack-in mechanism similar to Seldom Ending Channel Program.

IST1750I

pcithrso is threshold PCI overflow.

pcithrsh is threshold PCI count. This value represents the accumulated number of threshold PCI interrupts fielded by the QDIO Program-Controlled Interrupt Exit for the QDIO **READ** data transfer point.

A threshold PCI is a real PCI generated by the adapter because one of the threshold conditions which controls the PCI processing was met.

A count of zero indicates the QDIO device driver is providing sufficient resources to keep pace with the inbound data stream from the adapter.

IST1751I

pciunpro is unproductive PCI overflow.

pciunprd is unproductive PCI count. This value represents the accumulated number of unproductive PCI interrupts fielded by the QDIO Program-Controlled Interrupt Exit for the QDIO **READ** data transfer point.

An unproductive PCI is a real PCI where the QDIO Program-Controlled Interrupt Exit failed to find any completed reads. An unproductive PCI will occur when a virtual PCI causes the processing of read completions for which a real PCI is pending. An unproductive PCI indicates the system interrupt handler overhead was incurred unnecessarily.

IST1752I

rprocdeo is read processing deferral overflow.

rprocdef is read processing deferral count. This value represents the accumulated number of read processing deferrals by the QDIO Program-Controlled Interrupt Exit for the QDIO **READ** data transfer point.

A read processing deferral occurs when the QDIO Program-Controlled Interrupt Exit must defer a read completion because a control block cannot be obtained to represent the inbound data. Read processing deferrals (along with read replenishment deferrals) may cause the NOREADS count to be nonzero.

IST1753I

rrepldeo is read replenishment deferral overflow.

rrepldef is read replenishment deferral count. This value represents the accumulated number of read replenishment deferrals by the QDIO Program-Controlled Interrupt Exit for the QDIO **READ** data transfer point.

A read replenishment deferral occurs when the QDIO Program-Controlled Interrupt Exit does not have enough available read buffers to tack-in a new read. Read replenishment deferrals (along with read processing deferrals) may cause the NOREADS count to be nonzero.

IST1754I

noreadso is reads exhausted overflow.

noreads is reads exhausted count. This value represents the accumulated number of times reads were exhausted on entry to the QDIO Program-Controlled Interrupt Exit for the QDIO **READ** data transfer point.

This value is incremented by 1 each time the QDIO Program-Controlled Interrupt Exit is invoked and it detects that all the read buffers are full (the adapter has no place to move additional inbound data). A zero total is preferred because lack of read buffers may result in the adapter discarding inbound data. Examination of the read processing and read replenishment deferral counts may indicate the reason the QDIO device driver is not providing sufficient resources to accept the inbound data from the adapter.

IST1755I

sbalmax is the maximum number of active SBALs at the completion of the write initiation process for the QDIO **WRITE** priority level. This value will be in the range 0-128 (0 meaning the priority level had no outbound activity in the interval and 128 meaning that at one point in the interval ALL the SBALs for the priority level were active).

sbalavg is the average number of active SBALs at the completion of the write initiation process for the QDIO **WRITE** priority level. This value will be in the range 0-128 (0 meaning the priority level had no outbound activity in the interval and 128 meaning that every time the QDIO write initiator completed, all 128 SBALs were active).

IST1756I

qdpthmax is the maximum number of work elements left on the outbound work queue at the completion of the write initiation process for the QDIO **WRITE** priority level. This value will be a number in the range 0–54 or a character constant **>254**.

qdpthavg is the average number of work elements left on the outbound work queue at the completion of the write initiation process of the QDIO **WRITE** priority level. This value will be a number in the range 0–254 or a character constant **>254**.

A nonzero value for either of these fields suggests the adapter is not accepting outbound data as fast as the device driver is presenting it.

IST1810I

pktiqdo is the iqdio packet count overflow.

pktiqd is the iqdio packet count. If this message is for a QDIO or IQDIO DATAPATH device with a direction of read, the value represents the accumulated number of packets received on this particular QDIO or IQDIO READ data transfer point and subsequently routed outbound using iQDIO routing. If this message is for a QDIO or IQDIO DATAPATH device with a direction of WR, the value represents the accumulated number of packets transmitted on the write priority level for this device after being received inbound and subsequently routed outbound using iQDIO routing.

A packet is a single unit of data as presented to the QDIO device driver (for example, a datagram or TCP packet).

IST1811I

bytiqdo is the iqdio byte count overflow.

bytiqd is the iqdio byte count. If this message is for a QDIO or IQDIO DATAPATH device with a direction of read, the value represents the accumulated number of bytes received on this particular QDIO or IQDIO READ data transfer point and subsequently routed outbound using iQDIO routing. If this message is for a QDIO or IQDIO DATAPATH device with a direction of WR, the value represents the accumulated number of bytes transmitted on the write priority level for this device after being received inbound and subsequently routed outbound using iQDIO routing.

IST1812I

pktiqeo is the iqdio packet error count overflow.

pktiqe is the iqdio packet error count. This message is for an IQDIO DATAPATH device with a direction of WR. The value represents the accumulated number of packets not transmitted due to error on the write priority level for this device after being received inbound and subsequently routed outbound using iQDIO routing.

A packet is a single unit of data as presented to the QDIO device driver (for example, a datagram or TCP packet).

IST1813I

bytiqeo is the iqdio byte error count overflow.

bytiqe is the iqdio byte error count. This message is for an IQDIO DATAPATH device with a direction of WR. The value represents the accumulated number of bytes not transmitted due to error on the write priority level for this device after being received inbound and subsequently routed outbound using iQDIO routing.

System Action: Processing continues.

Operator Response: To discontinue statistics recording, enter the MODIFY NOTNSTAT command.

Programmer Response: For additional information on tuning and analyzing tuning statistics, see the *z/OS Communications Server: SNA Network Implementation Guide*.

IST1231I **IPDU** = *ipdu* **OPDU** = *opdu*

Explanation: VTAM issues this message as part of a group of messages that displays tuning statistics for multipath channel (MPC) attached resources. The first message in the group is IST1230I. See that message for a complete description.

IST1232I **TSWEEP** = *tsweep* **QSWEEP** = *qsweep*

Explanation: VTAM issues this message as part of a group of messages that displays tuning statistics for multipath channel (MPC) attached resources. The first message in the group is IST1230I. See that message for a complete description.

IST1233I **DEV** = *dev* **DIR** = *dir*

Explanation: VTAM issues this message as part of a group of messages that displays tuning statistics for multipath channel (MPC) attached resources. The first message in the group is IST1230I. See that message for a complete description.

IST1234I **BSIZE** = *bsize* **MAXBYTES** = *maxbytes*

Explanation: VTAM issues this message as part of a group of messages that displays tuning statistics for multipath channel (MPC) attached resources. The first message in the group is IST1230I. See that message for a complete description.

IST1235I **SIO** = *sio* **SLOWDOWN** = *slowdown*

Explanation: VTAM issues this message as part of a group of messages that displays tuning statistics for multipath channel (MPC) attached resources. The first message in the group is IST1230I. See that message for a complete description.

IST1236I **BYTECNTO** = *bytecnto* **BYTECNT** = *bytecnt* **[DIR** = *direction***]**

Explanation: VTAM issues this message as part of a group of messages that displays tuning statistics for multipath channel (MPC) attached resources. The first message in the group is IST1230I. See that message for a complete description.

IST1237I *state* = *number* **[** *state* = *number***]**

Explanation: VTAM issues this message as part of a message group in response to a DISPLAY SESSIONS,LIST=SUMMARY command. The first message in the group is IST873I. See the explanation of that message for a complete description.

IST1238I **DSPNAME CURRENT MAXIMUM QUEUED**

Explanation: VTAM issues this message as part of a subgroup of messages in response to a DISPLAY STORUSE,DSPNAME=*dspname* command requesting information for a specific network management application.

A complete description of the message group follows.

```
IST350I  DISPLAY TYPE = STORAGE USAGE
IST1238I DSPNAME  CURRENT   MAXIMUM   QUEUED
IST1239I dspname  current   maximum   queued
IST314I  END
```

Note: If DISPLAY STORUSE,DSPNAME=* is entered, VTAM displays storage usage for all network management applications and all other data spaces.

IST350I

This message identifies the type of information in the display and is always **STORAGE USAGE** for this message group.

IST1238I

This message is a header message for the information displayed in IST1239I.

IST1239I

dspname is the name of a data space created by VTAM and is the network management data space specified on the DISPLAY STORUSE command. The data space name is generated automatically when the data space is created by VTAM and is in one of the following formats:

IST*ccccc*
: *ccccc* is **0–FFFFC**

*ccccc***IST**
: *ccccc* is **1–99999**

current is the current storage usage, and is expressed in kilobytes.

maximum is the maximum storage usage since the data space was created, and is expressed in kilobytes.

queued is the current storage usage of requests queued for processing, and is expressed in kilobytes.

System Action: Processing continues.

Operator Response: None.

Programmer Response: None.

IST1239I *dspname current maximum queued*

Explanation: VTAM issues this message as part of a message subgroup. The first message in the subgroup is IST1238I. See the explanation of that message for a complete description.

IST1240I DSPNAME CURRENT MAXIMUM JOBNAME APPL COUNT

Explanation: VTAM issues this message as part of a subgroup of messages in response to a DISPLAY STORUSE command. A complete description of the message group follows.

- This message group is issued for the following commands:

  DISPLAY STORUSE,DSPNAME=*dspname*
  : Displays storage usage for a specific data space.

  DISPLAY STORUSE,JOBNAME=*jobname*
  : Displays storage usage for a specific VTAM application job.

  DISPLAY STORUSE,APPL=*applname*
  : Displays storage usage for a specific application.

  DISPLAY STORUSE,APPL=*
  : Displays storage usage for all applications.

```
 IST350I DISPLAY TYPE = STORAGE USAGE
 IST1240I DSPNAME  CURRENT  MAXIMUM  JOBNAME  APPL     COUNT
 IST1241I dspname  current  maximum  jobname  applname applcount
⋮
[IST1315I DISPLAY TRUNCATED AT keyword = number]
 IST1454I count type DISPLAYED
 IST314I  END
```

- DISPLAY STORUSE,DSPNAME=*

  Displays storage usage for all data spaces.

- DISPLAY STORUSE,JOBNAME=*

  Displays storage usage for all VTAM application jobs.

IST350I

This message identifies the type of information in the display and is always **STORAGE USAGE** for this message group.

IST1240I

This message is a header message for the information displayed in IST1241I.

IST1241I

dspname is the name of a data space created by VTAM. The data space name is generated automatically when the data space is created by VTAM and is in one of the following formats:

IST*ccccc*
: *ccccc* is **0–FFFFC**

*ccccc***IST**
: *ccccc* is **1–99999**

current is the current storage usage, and is expressed in kilobytes.

maximum is the maximum storage usage since the data space was created, and is expressed in kilobytes.

jobname is the name of one of the VTAM application jobs that can store information in the data space *dspname*.

applname is the name of one of the VTAM applications that can store information in the data space *dspname*.

applcount is the number of active VTAM applications that can store information in the data space *dspname*.

IST1315I

VTAM issues this message when the number of resources to be displayed exceeds the value specified for the MAX or NUM operand.

keyword is either **MAX** or **NUM**.

number is the value specified for either the MAX or NUM operand.

IST1454I

This message gives the number of resources displayed.

count is the number of resources displayed.

type is the type of resource for which storage information is displayed.

System Action: Processing continues.

Operator Response: None.

Programmer Response: None.

IST1241I *dspname current maximum jobname applname applcount*

Explanation: VTAM issues this message as part of a message subgroup. The first message in the subgroup is IST1240I. See the explanation of that message for a complete description.

IST1242I POOL CURRENT MAXIMUM [POOL CURRENT MAXIMUM]

Explanation: This message is the first message in a group of messages that VTAM issues in response to a DISPLAY STORUSE command.

Examples of possible message groups follow.

- DISPLAY STORUSE,POOL=*poolname*

  This message group displays information for a specific storage pool.

```
 IST350I  DISPLAY TYPE = STORAGE USAGE
 IST1242I POOL     CURRENT  MAXIMUM
 IST1243I poolname current  maximum
[IST1315I DISPLAY TRUNCATED AT keyword = number]
 IST1454I 1 POOL(S) DISPLAYED
 IST314I  END
```

- DISPLAY STORUSE,POOL=* command.

  This message group displays storage usage for all storage pools, including summary information for storage pools and modules.

```
 IST350I  DISPLAY TYPE = STORAGE USAGE
 IST1242I POOL     CURRENT MAXIMUM   [POOL     CURRENT MAXIMUM]
 IST1243I poolname current  maximum   [poolname current  maximum]
[IST1315I DISPLAY TRUNCATED AT keyword = number]
 IST1454I 1 POOL(S) DISPLAYED
 IST924I -------------------------------------------------------------
 IST1244I TOTAL    storage_type   POOL STORAGE USAGE:   current maximum
 IST1244I TOTAL    storage_type   POOL STORAGE USAGE:   current maximum
 IST924I -------------------------------------------------------------
[IST981I VTAM PRIVATE: CURRENT = currentK, MAXIMUM USED = maximumK]
 IST924I -------------------------------------------------------------
 IST1565I type    MODULES = currentK
 IST1565I type    MODULES = currentK
 IST1565I type    MODULES = currentK
 IST314I  END
```

IST350I

This message identifies the type of information in the display and is always **STORAGE USAGE** for this message group.

IST981I

*current*K is the amount of VTAM private storage currently in use. This does not include the amount of private storage required to load the VTAM modules.

*maximum*K is the maximum amount of VTAM private storage ever in use since VTAM was started.

See the *z/OS Communications Server: SNA Network Implementation Guide* for more information about storage pools.

If this message does not appear in the display, you may need to reissue the DISPLAY STORUSE command, specifying a higher value for the MAX operand. See the *z/OS Communications Server: SNA Operation* for additional information.

IST1242I

This message is a header message for the information displayed in IST1243I.

IST1243I

poolname is the name of the storage pool specified on the DISPLAY STORUSE command.

current is the total current storage usage, in kilobytes, for storage pools.

maximum is the total maximum storage usage, in kilobytes, for storage pools since VTAM was initialized.

IST1244I

storage_type is either **PRIVATE** (private storage) or **COMMON** (common storage).

current is the total current storage usage for storage pools and is expressed in kilobytes.

maximum is the total maximum storage usage for storage pools since VTAM was initialized and is expressed in kilobytes.

IST1315I

VTAM issues this message when the number of pools to be displayed exceeds the value specified for the MAX or NUM operand.

keyword is either **MAX** or **NUM**.

number is the value specified for either the MAX or NUM operand.

IST1454I

This message shows the total number of storage pools for which storage usage information is displayed.

IST1565I

type can be one of the following:

CSA 31-bit and 24-bit addressable common storage acquired for VTAM modules

CSA24 24-bit addressable common storage acquired for VTAM modules

PRIVATE
Private storage used to load VTAM modules

currentK is the current VTAM CSA allocation for modules.

System Action: Processing continues.

Operator Response: None.

Programmer Response: None.

IST1243I *poolname current maximum* [*poolname current maximum*]

Explanation: VTAM issues this message as part of a message subgroup. The first message in the subgroup is IST1242I. See the explanation of that message for a complete description.

IST1244I **TOTAL** *storage_type* **POOL STORAGE USAGE:** *current maximum*

Explanation: This message is part of a group of messages that VTAM issues in response to a DISPLAY STORUSE,POOL=* command requesting storage usage for all private and common storage pools. See message IST1242I for a complete description of this message group.

storage_type is either **PRIVATE** (private storage) or **COMMON** (common storage).

current is the total current storage usage, and is expressed in kilobytes.

maximum is the total maximum storage usage since VTAM was initialized, and is expressed in kilobytes.

System Action: Processing continues.

Operator Response: None.

Programmer Response: None.

IST1245I **NO NETWORK NODE SERVER IS AVAILABLE FOR CP-CP SESSIONS**

Explanation: VTAM issues this message when an active CP-CP session with a network node was lost, and VTAM could not find another suitable network node server. In this situation, the original CP-CP session could have been activated by an operator command.

This message is also issued when no CP-CP session with a network node exists, and VTAM could not find a suitable network node server when one of the following events occurred:

- Activation of a new network node server list
- Operator modification of the NNSPREF start option to specify a new preferred network node server
- Completion of VTAM initialization when the NNSPREF start option has been specified with the name of a network node

Note: If this message appears when VTAM is initializing, it might indicate a temporary condition that will be resolved when the pending link activations initiated by the VTAM configuration list are completed.

System Action: Processing continues.

Operator Response: Enter the VARY ACT,ID=*adjcpname* command and specify the desired server. VTAM will attempt to establish a CP-CP session with *adjcpname* even if *adjcpname* is not allowed by the current network node server list.

Programmer Response: You should modify the network node server list to define additional network nodes as acceptable servers. Either add new NETSRVR definition statements for individual network nodes or add a nameless NETSRVR definition statement that allows any known network node to act as the network node server.

After the list has been modified, issue a VARY ACT,ID=*member_name* command where *member_name* is the member in the definition library that contains the edited network node server list.

If the network node server list is left unchanged, VTAM may not be able to acquire a new server if the current server fails.

IST1246I ADJACENT CP NOT DEFINED IN CURRENT NETWORK NODE SERVER LIST

Explanation: VTAM issues this message as part of a group of messages when this end node is unable to establish a session with a network node. The first message in the group is IST1110I. See the explanation of that message for a complete description.

IST1247I ALL ATTEMPTS TO ESTABLISH A SESSION WERE UNSUCCESSFUL

Explanation: VTAM issues this message as part of a group of messages when this end node is unable to establish a session with a network node. The first message in the group is IST1110I. See the explanation of that message for a complete description.

IST1248I DEACTIVATE LOCAL LINK BEFORE DELETING

Explanation: VTAM issues this message as part of a group of messages. The first message in the group is IST1158I. See the explanation of that message for a complete description.

IST1249I SYNTAX ERROR AT RECORD *record_number* IN MEMBER *member*

Explanation: This message is the first in a group of messages that VTAM issues when a syntax error is detected in a statement in the definition library. A complete description of the message group follows.

```
IST1249I SYNTAX ERROR AT RECORD record_number IN MEMBER member
IST258I  STMT IN ERROR = text
IST314I  END
```

record_number is the number of logical records of *member* that had been processed when the error was detected. This number is equivalent to the line or record number seen for that record when *member* is viewed in an editor.

member is the member of the definition library containing the statement that is in error.

text is the text of the statement containing the syntax error. The error could be any assembler coding error, such as a non-blank character in column 72 followed by a blank in column 16 of the continuation line. A common error is a comma missing before a continuation symbol in column 72.

System Action: Processing continues.

Operator Response: Save the system log for problem determination.

Programmer Response: Correct the statement in error. See the *z/OS Communications Server: SNA Resource Definition Reference* for more information on correct syntax for definition statements.

IST1250I NAME LEVEL MODULE STATUS

Explanation: VTAM issues this message as part of a message group in response to a DISPLAY EXIT,ID=*exitname* or DISPLAY EXIT,ID=* command. A complete description of the message group follows.

```
 IST350I   DISPLAY TYPE = EXIT
 IST1250I  NAME     LEVEL     MODULE     STATUS
 IST1251I  exitname exitlevel module     status
⋮
[IST1315I DISPLAY TRUNCATED AT MAX = number]
[IST199I  OPTIONS = {NONE|optionlist}]
```

```
⋮
 IST1454I count EXIT(S) DISPLAYED
 IST314I   END
```

Note: If the command specifies ID=*, IST1251I is repeated to display the status of all exits. If the command specifies ID=ISTEXCAA, and the exit is active, IST199I is repeated to display all functions supported by this exit.

IST199I

optionlist can include the following options:

ACCTING
Initial and final accounting

ADJ_DSRL
Adjacent SSCP selection for DSRLST processing

ADJSSCP
Adjacent SSCP selection

ALIAS Alias translation

ALL All functions of the exit are traced

ALS Adjacent link station selection

ALS_CDRS
Adjacent link station selection for CDRSCs

ALS_DSRL
Adjacent link station selection for DSRLST processing

BEGIN Begin function

END End function

GWPATH
Gateway path selection

INITA_IO
Initial authorization for INIT OTHER CD

INITAUTH
Initial authorization

REPL Exit replacement and replaced function

SECAUTH
Secondary authorization

VRSEL Virtual route selection

XRF XRF session switch

IST350I

This message identifies the type of information shown in the display. For this message group, the display type is always **EXIT**.

IST1250I and IST1251I subgroup

exitname is the name of a user-written exit routine.

exitlevel is the internal exit version identifier. See *z/OS Communications Server: SNA Customization* for the explanation of *exitlevel* for *exitname*. If *exitlevel* is not coded, ***NA*** is displayed.

module is the module name of a user-written exit routine.

status is the state of *exitname* when the DISPLAY EXIT command was issued, and can be one of the following:

ACTIVE
The exit is operational.

INACTIVE
The exit is not available for use.

PENDING ACTIVE
The exit is in the process of being activated.

PENDING ACTIVE REPLACE
The exit is in the activation phase of a MODIFY EXIT,ID=*exitname*,OPT=REPL command.

PENDING INACTIVE
The exit is in the process of being deactivated and is available only for termination activity.

PENDING INACTIVE REPLACE
The exit is in the deactivation phase of a MODIFY EXIT,ID=*exitname*,OPT=REPL command.

IST1315I

VTAM issues this message when the number of exits to be displayed exceeds the value specified on the MAX operand.

number is the value specified for the MAX operand.

IST1454I

count is the number of exits displayed.

System Action: Processing continues.

Operator Response:

ACTIVE
None.

INACTIVE
This value of *status* is displayed in two situations:

- The exit is installed but is not available for use.

  Use the MODIFY EXIT command to activate *exitname*. See the *z/OS Communications Server: SNA Operation* for information on the MODIFY EXIT command.
- The exit is not installed.

  Save the system log for problem determination.

PENDING ACTIVE, PENDING ACTIVE REPLACE, PENDING INACTIVE, and PENDING INACTIVE REPLACE
If *exitname* remains in a pending state, there may be a problem. Save the system log for problem determination.

Programmer Response: If the exit is necessary for your operation, you may have to halt VTAM and fix the problem with the user-written exit before continuing. See *z/OS Communications Server: SNA Customization* for additional information.

IST1251I *exitname exitlevel module status*

Explanation: VTAM issues this message as part of a message subgroup. The first message in the subgroup is IST1250I. See the explanation of that message for a complete description.

IST1252I DEFINED NETWORK NODE SERVER LIST, NAME = *nnslist*

Explanation: This message is part of a group of messages that VTAM issues in response to a DISPLAY NETSRVR command. A complete description of the message group follows.

```
 IST350I    DISPLAY TYPE = NETWORK NODE SERVER LIST
 IST1252I   DEFINED NETWORK NODE SERVER LIST, NAME = nnslist
 IST1253I   {nodename|****NAMELESS****|NONE}     [SLUINIT=REQ|SLUINIT=OPT]
⋮
 IST924I    ------------------------------------------------------------
[IST1254I  SERVER LIST PROCESSED ORDER = {FIRST|NEXT}
 IST924I    ------------------------------------------------------------]
[IST1255I   OTHER NETWORK NODES ALLOWED AS SERVERS
 IST1253I   {nodename|NONE}     [SLUINIT=REQ|SLUINIT=OPT]]
⋮
 IST924I    ------------------------------------------------------------
 IST1256I   CURRENT NETWORK NODE SERVER
 IST1253I   {nodename|NONE}     [SLUINIT=REQ|SLUINIT=OPT]
[IST924I    ------------------------------------------------------------]
[IST1672I   CURRENT NETWORK NODE SERVER NOT FOUND IN ACTIVE NETSRVR LIST]
 IST1677I   PREFERRED NETWORK NODE SERVER
 IST1253I   {nodename|NONE}     [SLUINIT=REQ|SLUINIT=OPT]
 IST314I    END
```

IST350I

This message identifies the type of information in the display and is always **NETWORK NODE SERVER LIST** for this message group.

IST1252I and **IST1253I subgroup: List of Network Nodes Defined as Servers**

This message subgroup displays all network nodes that are explicitly defined in the network node server list *nnslist*.

nodename is the network-qualified name of an adjacent network node in the form *netid.name*.

******NAMELESS****** is displayed if the network node server list contains a nameless entry.

NONE is displayed if no network nodes have been explicitly defined as potential servers, and the network node server list does not contain a nameless entry.

SLUINIT=REQ or **SLUINIT=OPT** is displayed for *nodename*, and is the value specified on the NETSRVR definition statement.

IST1254I: Order for Processing the Network Node Server List

This message is displayed when one or more network nodes have been explicitly defined to act as a server for this end node. It indicates the order in which the network node server list is processed.

FIRST indicates that the search for a server begins with the first network node specified on the list.

NEXT indicates that the search for a server begins with the network node on the list that follows the last entry that was successfully or unsuccessfully tried.

IST1255I and **IST1253I subgroup: List of Other Network Nodes Allowed as Servers**

This message subgroup is only displayed if SCOPE=ALL was specified on the command. It displays all the network nodes that can act as a network node server for this end node but are not explicitly defined in the network node server list.

nodename is the network-qualified name of an adjacent network node in the form *netid.name*.

NONE is displayed in either of the following situations:

- The network node server list does not contain a nameless entry.
- The network node service list contains a nameless entry, but there are no other known adjacent network nodes that support CP-CP sessions.

SLUINIT=REQ or **SLUINIT=OPT** is displayed for *nodename*, and is the value specified on the NETSRVR definition statement.

IST1256I and **IST1253I subgroup: Network Node Currently Selected as Server**

This message subgroup displays the name of the network node currently selected as this end node's network node server. The name displayed here is the name of an adjacent network node that this end node has most recently determined to be a suitable network node server and with which this end node has either established CP-CP sessions or is in the process of establishing CP-CP sessions. At the time the DISPLAY NETSRVR command displays this name, CP-CP sessions with this network node might not yet be fully active.

nodename is the network-qualified name of an adjacent network node in the form *netid.name*.

NONE is displayed if this end node could not find a suitable network node server or could not successfully establish CP-CP sessions with any of the network nodes it found suitable as network node servers.

SLUINIT=REQ or **SLUINIT=OPT** is displayed for *nodename*, and is the value specified on the NETSRVR definition statement.

IST1672I

- This message is displayed in response to a DISPLAY NETSRVR command. VTAM displays the message when the active network node server list does not contain either an explicit entry for the current network node server or a nameless entry.

IST1677I and IST1253I subgroup: Network Node Specified as the Preferred Network Node Server

- This message subgroup displays the name of the network node specified as the preferred network node server for this end node. The preferred network node server is specified by the NNSPREF start option.
- *nodename* is the network-qualified name of an adjacent network node in the form *netid.name*.
- **NONE** is displayed if this end node does not have a preferred network node server.

IST1252I

- **SLUINIT=REQ** or **SLUINIT=OPT** is displayed for nodename, and is the value specified on the NETSRVR definition statement for the preferred network node server. If no NETSRVR definition statement exists for the preferred network node server, then **SLUINIT=REQ** is displayed as the default value.

System Action: Processing continues.

Operator Response: If this message group displays the network node server list as expected, no response is necessary.

If the message group displays unexpected results, save the system log for problem determination.

IST1256I and **IST1253I subgroup**:

If *nodename* is not the desired server but the network node server list is correct, then deactivate the session to the current server and reactivate the list.

IST1672I

- If the current network node server is the one desired, activate a network node server list that includes the current network node server. If no network node server list member includes the current network node server, contact the system programmer to code the current network node server in a network node server list member. Then activate that list.

  If the current network node server is not the one desired, deactivate the CP-CP session with the current network node server. The new network node server will be selected from the candidates specified in the active network node server list.

Programmer Response: If the message group displays unexpected results:

1. Correct the network node server list.
2. Ask the operator to reactivate the modified list by entering the VARY ACT,ID=*member_name* command where *member_name* is the name of the definition list member that contains the network node server list.

IST1252I and **IST1253I subgroup**:

If a specific node is missing from the list, add a NETSRVR definition statement that explicitly adds that node to the group of network node server list definition statements.

Note: List all NETSRVR definition statements that explicitly name a network node **before** a NETSRVR definition statement that allows any network node to act as server.

IST1254I:

If **ORDER** does not display the desired value, then change the VBUILD,TYPE=NETSRVR definition statement to specify the correct order of server selection.

IST1255I and **IST1253I subgroup**:

By default, when no network nodes are explicitly defined as servers, any network node can be used as long as SLUINIT=OPT is defined on the nameless entry.

Also, if a NETSRVR definition statement without a specific network node name is included at the end of the definition statements, then any network node is allowed to act as server as long as SLUINIT=OPT is defined on the nameless entry.

To use only explicitly defined network nodes as servers, build the network node server list with the VBUILD,TYPE=NETSRVR definition statement and explicitly name each network node on an individual NETSRVR definition statement.

IST1256I and **IST1253I subgroup:**

If *nodename* is not the desired server and the network node server list is not correct, then modify the network node server list with the VBUILD,TYPE=NETSRVR definition statement and explicitly name each network node on an individual NETSRVR definition statement.

For information on building the network node server list, see the *z/OS Communications Server: SNA Resource Definition Reference*.

IST1672I

- If requested by the operator, code the name of the current network node server in a network node server list member.

IST1677I and IST1253I subgroup

- If *nodename* is not the network node you want as the preferred network node server for this end node, have the operator change the NNSPREF start option value to the network node that you want.

IST1253I {*nodename*|****NAMELESS****| NONE} [SLUINIT=REQ|SLUINIT=OPT]

Explanation: VTAM issues this message as part of a group of messages in response to a DISPLAY NETSRVR command. The first message in the group is IST1252I. See the explanation of that message for a complete description.

IST1254I SERVER LIST PROCESSED ORDER = {FIRST|NEXT}

Explanation: VTAM issues this message as part of a group of messages in response to a DISPLAY NETSRVR command. The first message in the group is IST1252I. See the explanation of that message for a complete description.

IST1255I OTHER NETWORK NODES ALLOWED AS SERVERS

Explanation: VTAM issues this message as part of a group of messages in response to a DISPLAY NETSRVR command. The first message in the group is IST1252I. See the explanation of that message for a complete description.

IST1256I CURRENT NETWORK NODE SERVER

Explanation: VTAM issues this message as part of a group of messages in response to a DISPLAY NETSRVR command. The first message in the group is IST1252I. See the explanation of that message for a complete description.

IST1257I SEQUENCE NOT VALID, STATEMENT IGNORED, SKIPPING TO EOF

Explanation: This message is the first in a group of messages that VTAM issues when the network node server list contains NETSRVR statements that are out of order. All NETSRVR statements that explicitly name a network node to act as server must **precede** a NETSRVR statement that does not explicitly name a network node.

A complete description of the message group follows:

```
IST1257I   SEQUENCE NOT VALID, STATEMENT IGNORED, SKIPPING TO EOF
IST701I    CONFIG configname LABEL = labelname
           STMT TYPE = statementname
IST314I    END
```

IST701I

configname is the name assigned to the VBUILD statement.

labelname is the name of the network node specified on the NETSRVR statement.

statementname is the NETSRVR statement.

System Action: Any NETSRVR statements following the NETSTVR statement that does not explicitly name a network node are ignored. Processing continues.

Operator Response: The system programmer should modify the network node server list. After the list has been modified, issue VARY ACT,ID=*member_name*, where *member_name* is the name of the definition list member that contains the edited network node server list.

Programmer Response: Correct the ordering of the NETSRVR definition statements that comprise the network node server list. Refer to the *z/OS Communications Server: SNA Resource Definition Reference* for information on building the network node server list.

IST1258I *value* **IS NOT VALID FOR** *nodetype*

Explanation: VTAM issues this message when the command or operand is not valid for the node.

value is one of the following:

- The name of the command that failed. For a description of *value*, see Chapter 14, "Command and RU types in VTAM messages" on page 685.
- The name or value of the operand that caused the command to fail.

For more information on *value*, see *z/OS Communications Server: SNA Operation*.

System Action: VTAM rejects the command.

Operator Response: Ensure that you entered the command correctly. If problems persist, save the system log for problem determination.

Programmer Response: If necessary, correct the NODETYPE start option for this end node or network node. Then, reactivate the system. For information on the NODETYPE start option, see the *z/OS Communications Server: SNA Resource Definition Reference* .

IST1259I **VBUILD TYPE =** *type1* **IS ONLY VALID FOR** *type2*

Explanation: VTAM issues this message in the following situations:

- If *type1* is **NETSRVR**, VTAM issues this message at this network node when an attempt is made to build a network node server list. Network nodes function as their own servers. In this case, *type2* is **EN**.
- If *type1* is **ADJCLUST** or **BNCOSMAP**, VTAM issues this message when a VBUILD statement is defined for a node that is not a border node. In this case, *type2* is **BN**.

System Action: The VBUILD statement is ignored. Processing continues.

Operator Response: Save the system log for problem determination.

Programmer Response:

If *type1* is **NETSRVR**:

- To define this node as a network node, delete the network node server list definition from the network node system definitions.
- To define this node as an end node, correct the start options to define this node as an end node. See the *z/OS Communications Server: SNA Resource Definition Reference*.

If *type1* is **ADJCLUST** or **BNCOSMAP**:

- To define this node as a border node, modify the start options as needed.
- If you do not want to define this node as a border node, delete the appropriate ADJCLUST or COSMAP definition statements.

IST1260I *type* **TRUNCATED–INSUFFICIENT STORAGE**

Explanation: This message is the first in a group of messages that VTAM issues when a lack of storage prevents VTAM from creating a complete internal representation of the specified resource type. It is also issued as a stand-alone message when a lack of storage prevents VTAM from allocating a larger trace table for TRS traces.

The message is issued alone when one page of storage for the TRS trace table is full and an attempt is made to allocate an additional page of storage for TRS trace table entries.

type indicates the specified storage that cannot be allocated and will always be TRS TRACE TABLE when the message is issued as a stand-alone message.

A complete description of the message group follows:

```
IST1260I   type TRUNCATED-INSUFFICIENT STORAGE
IST701I    CONFIG configname LABEL = labelname STMT TYPE = statementname
IST314I    END
```

type indicates the specified resource and can be one of the following:

NETWORK NODE SERVER LIST

ADJACENT CLUSTER TABLE
COSMAP TABLE

IST701I

This message identifies where within the resource the truncation occurred.

If *type* is **NETWORK NODE SERVER LIST**:
– *configname* is the name assigned to the VBUILD definition statement.
– *labelname* is the name of the network node specified on the NETSRVR definition statement.
– *statementname* is the NETSRVR definition statement.

If *type* is **ADJACENT CLUSTER TABLE** or **COSMAP TABLE**:
– *configname* is the name assigned to the VBUILD definition statement.
– *labelname* is the name specified by NETID on the NETWORK definition statement.
– *statementname* is the NETWORK definition statement.

The VTAM definition statements and tables are described in the *z/OS Communications Server: SNA Resource Definition Reference* .

System Action: VTAM uses as many of the entries as it is able to process successfully and ignores the rest.

If *type* is **TRS TRACE TABLE**, the TRS trace table will be truncated at the end of the already allocated page of storage and additional entries in the table will wrap back to the beginning of the table. If storage is available the next time the end of the trace table is reached, another attempt will be made to allocate an additional page of storage for the table.

If *type* is **NETWORK NODE SERVER LIST**, an entry indicating that any known network node can act as the network node server is added at the end of the truncated list.

Processing continues.

Operator Response: Enter the DISPLAY BFRUSE command to display information about the common storage area (CSA). Total VTAM private storage information is also displayed in message IST981I. Enter the DISPLAY STORUSE command to display storage usage for storage pools.

If *type* is **ADJACENT CLUSTER TABLE** or **COSMAP TABLE**, enter a DISPLAY ADJCLUST command or a DISPLAY COSMAP command to determine which entries were recorded.

Save the system log and request a dump for problem determination.

Programmer Response: Increase storage as required.

If *type* is **NETWORK NODE SERVER LIST**, after the storage shortage problem is corrected:

- Ask the operator to enter the VARY ACT,ID=*member_name* command where *member_name* is the name of the definition list member that contains the network node server list.

See the *z/OS Communications Server: SNA Operation* for more information.

See the *z/OS Communications Server: SNA Diagnosis Vol 2, FFST Dumps and the VIT* for information about analyzing dumps and about analyzing storage using the VIT analysis tool, if external trace is active.

IST1261I ABEND OCCURRED DURING LINK DEFINITION

Explanation: VTAM issues this message as part of a message group when an attempt to define the link to APPN Topology and Routing Services has failed. The first message in the group is IST1118I. See the explanation of that message for a complete description.

IST1262I MODULE *modulename* **LOAD FAILED –** *reason*

Explanation: VTAM issues this message in response to a MODIFY EXIT command when the module *modulename* fails to load.

modulename is the name of the module that failed to load.

reason provides information about the cause of the load failure and can be one of the following:

IST1262I

DEFINED AS ALIAS IN CSLOD
Either the alias module *modulename* could not be located in the vector list of its load module or the alias module was loaded before the vector list.

INSUFFICIENT STORAGE
Not enough storage was available to process the load request.

I/O ERROR LOADING MODULE
An I/O error occurred when loading *modulename*.

I/O TIMEOUT LOADING MODULE
An attempt was made to load *modulename*, but a system or hardware problem has caused the module load facility to time out while waiting for I/O to complete.

LOADER INOPERATIVE
This can occur for one of the following reasons:

- A previous module load never completed.
- The VTAM-directed load subtask, ISTINMLS, abnormally ended during a load request.
- The VTAM-directed load subtask, ISTINMLS, has not completed its initialization.

LOCK PROTOCOL VIOLATION
A locking protocol violation occurred while VTAM was trying to satisfy the load request.

MODULE NOT IN ISTCSLOD
modulename is not in ISTCSLOD.

MODULE NOT FOUND
The resource identified by *modulename* does not exist.

System Action:

- If *reason* is **LOADER INOPERATIVE**, all subsequent commands that require the loader will fail. If the I/O load operation eventually succeeds, load operations are again enabled.
- If *reason* is **MODULE NOT IN ISTCSLOD** or **DEFINED AS ALIAS IN CSLOD**, VTAM initialization or an activation request might fail.
- For all other *reason*s, the MODIFY EXIT command is ignored, and VTAM uses the old exit.

Operator Response:

- If *reason* is **INSUFFICIENT STORAGE**, enter the DISPLAY BFRUSE command. Enter the DISPLAY STORUSE command to display storage usage for storage pools. Save the system log and request a dump for problem determination. When more storage is available, reenter the command.
- If *reason* is **MODULE NOT FOUND**, ensure that you entered the command correctly. See the *z/OS Communications Server: SNA Operation* for more information.
- For the following values of *reason*, save the system log for problem determination.
  - **DEFINED AS ALIAS IN CSLOD**
  - **I/O ERROR LOADING MODULE**
  - **I/O TIMEOUT LOADING MODULE**
  - **LOADER INOPERATIVE**
  - **LOCK PROTOCOL VIOLATION**
  - **MODULE NOT IN ISTCSLOD**

Programmer Response:

- If *reason* is **INSUFFICIENT STORAGE**, use the *z/OS Communications Server: SNA Migration* to review VTAM storage requirements. See the *z/OS Communications Server: SNA Diagnosis Vol 2, FFST Dumps and the VIT* for information about analyzing dumps and about analyzing storage using the VIT analysis tool, if external trace is active.

  If the operation is critical, deactivate some major nodes in order to free up storage for the command, and then reenter the command.
- If *reason* is **I/O ERROR LOADING MODULE** or **I/O TIMEOUT LOADING MODULE**, examine your VTAMLST file to make sure the requirements for the VTAM system are correct for your system.
- If *reason* is **LOADER INOPERATIVE** or **LOCK PROTOCOL VIOLATION**, contact the IBM Support Center.
- If *reason* is **MODULE NOT IN ISTCSLOD** or **DEFINED AS ALIAS IN CSLOD**, contact the IBM Support Center.

IST1263I *command* **FOR** *nodename* **FORCED COLD,** *datasetname* **{EMPTY|ERROR}**

Explanation: VTAM activated *nodename* to its initial (cold) status because the configuration restart data set (checkpoint data set) for the node *nodename* contained no records or an error occurred.

command is either **START** or **VARY ACT**.

nodename is the name of the affected node. If *nodename* is session-capable, VTAM issues *nodename* as a network-qualified name in the form *netid.name*.

datasetname is the DDNAME for the checkpoint data set.

- An empty configuration restart data set indicates that the node has not been previously activated with checkpointing. You cannot perform a warm activation for a node that was not previously activated.
- If the message indicates an error, a previous message will give an explanation of the error.

NO DATA SET
The checkpoint data set does not exist

System Action: Processing continues.

Operator Response: None.

Programmer Response: None.

IST1264I *command* **FOR** *nodename* **FAILED DURING DEFINITION**

Explanation: VTAM issues this message when the *command* entered to activate or acquire the major node *nodename* failed during network definition.

command is the command that failed. Possible values of *command* and the cause of the error can be one of the following:

VARY ACT or VARY ACQ
The VARY ACT or VARY ACQ command for a major node definition is in error.

VARY DRDS
Processing of a VARY DRDS (dynamic reconfiguration data set) command failed, and the entire definition was rejected.

MODIFY DR
A MODIFY DR command failed.

nodename is the name of the major node that was specified on the command. If *nodename* is session-capable, VTAM issues *nodename* as a network-qualified name in the form *netid.name*.

System Action: The command fails. The major node or DRDS definition and its resources remain inactive, and VTAM cannot use them.

Operator Response: Save the system log and print the major node definition for problem determination.

Programmer Response: Previous messages provide information about the cause of the failure.

- If this is a definition error, correct the major node definition or DRDS definition to resolve the problem before the operator reenters the command.
- If this is not a definition error, tell the operator to reenter the command using the correct major node name. See *z/OS Communications Server: SNA Operation* for more information about *command*.

IST1265I *command* **FOR** *nodename* **FAILED –** *reason*

Explanation: The operator entered a VARY ACT command *command* with the WARM operand for the node *nodename*.

command is the command that failed.

nodename is the name of the node specified on the command. If *nodename* is session-capable, VTAM issues *nodename* as a network-qualified name in the form *netid.name*.

VTAM rejected the command for one of the following *reason*s:

cpdsname **EMPTY**
Configuration-restart data set (checkpoint data set) *cpdsname* contained no records. (An empty configuration-restart data set generally indicates that the node has not been previously activated with checkpointing. You cannot reactivate a node to a warm status if the node was not previously activated.)

cpdsname **ERROR**
VTAM encountered an error while processing the configuration-restart data set (checkpoint data set) *cpdsname*. A previous message provides an explanation of the error.

NO DATA SET
The checkpoint data set does not exist.

System Action: The command fails. Other processing continues.

Operator Response: To activate the node to initial (cold) status, reenter the VARY ACT command without the WARM operand.

Programmer Response: None.

IST1266I *command* **FOR** *nodename* **AFFECTS NEW SESSIONS ONLY**

Explanation: The operator entered the MODIFY ENCR *command* and changed the cryptographic session level of *nodename*. However, node *nodename* is in session or has queued sessions. The change will not affect the current or queued sessions, but will affect future sessions for *nodename*.

nodename is the name of the node specified on the command. If *nodename* is session-capable, VTAM issues *nodename* as a network-qualified name in the form *netid.name*.

System Action: VTAM retains the new cryptographic session level specified in the MODIFY ENCR command and uses it when processing subsequent session-establishment requests.

Operator Response: None.

Programmer Response: None.

IST1267I *command* **FAILED – CANNOT DEFINE** *nodename*

Explanation: VTAM stopped processing the *command*. VTAM could not define the resource *nodename* for one of the following reasons:

- *nodename* has the same name as another resource in this domain.
- *nodename* has the same network address as another resource in this domain.
- The value for VNNAME for *nodename* matches the value for CPNAME on a PU in this domain.
- The value for VNNAME for *nodename* refers to an ADJCP for which VN=YES is not specified.

command is the command that failed. See Chapter 14, “Command and RU types in VTAM messages” on page 685 for a description of *command*.

nodename is the name of the resource specified on the command. If *nodename* is session-capable, VTAM issues *nodename* as a network-qualified name in the form *netid.name*.

System Action: VTAM rejects the command.

Operator Response: Display *nodename*:

- If the resource already exists, *command* failed because the resource was already defined.
- If *nodename* is a communication controller, enter a DISPLAY STATIONS command.
- If the subarea of *nodename* is listed as an adjacent subarea in the display, another communication controller has been defined for that subarea. The communication controller might still exist if the link to that subarea is still active. To correct the problem, enter a VARY INACT command for the link to the adjacent subarea.
- If the resource does not exist, display VNNAME. If VNNAME already exists, *command* failed because the VNNAME was already defined with a different nodetype.

Save the system log for problem determination.

Programmer Response: Ensure that *nodename* has a unique name, unique network address, or unique VNNAME.

Refer to the *z/OS Communications Server: SNA Resource Definition Reference* for more information on VNNAME definitions.

IST1268I *nodename* **DEACTIVATION** *request* **FAILED:** *code*

Explanation: VTAM cannot complete deactivation of *nodename* because *request* has failed with a sense code of *code*.

For a description of *request*, see Chapter 14, “Command and RU types in VTAM messages” on page 685.

code is the sense code. See the *z/OS Communications Server: IP and SNA Codes* for a description of *code*.

If *nodename* is session-capable, VTAM issues *nodename* as a network-qualified name in the form *netid.name*.

System Action: VARY deactivate processing for *nodename* is pending. The node is not available to VTAM.

Operator Response: Enter a VARY INACT,TYPE=FORCE command to deactivate the node. If the problem persists, save the system log for problem determination.

Programmer Response: Use the system log and *code* to assist you in determining the cause of the problem.

IST1269I *command* **FOR** *nodename* **FAILED**

Explanation: VTAM issues this message when processing of the *command* for *nodename* failed. For example, a deactivate command failed because no storage was available to continue.

nodename is the name of the resource and is either an NCP or logical unit (LU). If the resource is an LU, VTAM issues *nodename* as a network-qualified name in the form *netid.name*.

System Action: VTAM rejects the command.

Operator Response:

- If message IST383I or IST1268I precedes this message, enter a VARY INACT,TYPE=FORCE command to deactivate the resource.
- If this is a storage problem, messages IST561I, IST562I, IST563I, IST564I, IST565I or IST566I may be issued prior to this message to indicate the type of storage affected.

  If message IST467I is displayed with contacted error type 5, see the programmer response of that message for additional information.

  Enter the DISPLAY BFRUSE command to display storage used by VTAM buffer pools and information about the common service area (CSA). Total VTAM private storage information is also displayed in message IST981I. Enter the DISPLAY STORUSE command to display storage usage for storage pools.

  Save the system log and request a dump for problem determination.

Programmer Response: For a storage problem, verify that the operator entered the buffer pool or CSA start options as specified in the start procedures.

Increase storage as required. For insufficient storage errors, you might want to redefine your buffer pool or CSA start options. If the start option cannot be modified using the MODIFY VTAMOPTS command, you must modify the VTAM start options file (ATCSTRxx), and restart VTAM to use the start option.

See the *z/OS Communications Server: SNA Operation* for information about the DISPLAY BFRUSE Command, the DISPLAY STORUSE Command, and the MODIFY VTAMOPTS Command. See the *z/OS Communications Server: SNA Diagnosis Vol 1, Techniques and Procedures* for additional information.

See the *z/OS Communications Server: SNA Diagnosis Vol 2, FFST Dumps and the VIT* for information about analyzing dumps and about analyzing storage using the VIT analysis tool, if external trace is active.

IST1270I *command* **FAILED –** *nodename* **NOT ACTIVE**

Explanation: VTAM issues this message when the *command* failed because *nodename* is not active.

See Chapter 14, “Command and RU types in VTAM messages” on page 685 for a description of *command*.

Either of the following conditions may have occurred.

- A forced deactivate command was entered for *nodename*, and the resource is already inactive.

- A forced reactivate command was entered for *nodename*. The resource is being activated, but the activate processing has not proceeded far enough.

If *nodename* is session-capable, VTAM issues *nodename* as a network-qualified name in the form *netid.name*.

System Action: VTAM stops processing *command*.

Operator Response: Ensure that you entered the command for the correct node. If so, save the system log for problem determination.

Programmer Response: Use the system log to assist you in correcting the problem. When you have corrected the error condition, ask the operator to reenter the command.

IST1271I *command2* **FOR** *nodename* **SCHEDULED BY** *command1*

Explanation: VTAM issues this message when *command2* has been scheduled for *nodename*. *command1* is responsible for scheduling *command2*. For example, explicit deactivation of a peripheral node causes implicit deactivation of that node's LUs.

See Chapter 14, "Command and RU types in VTAM messages" on page 685 for a description of *command1* and *command2*.

If *nodename* is session-capable, VTAM issues *nodename* as a network-qualified name in the form *netid.name*.

System Action: Processing of *command2* continues.

Operator Response: None.

Programmer Response: None.

IST1272I *command nodename* **CONTINUES –** *name* **UNDEFINED**

Explanation: During processing of the *command*, VTAM determined that it cannot define *name* as a part of *nodename* for one of the following reasons:

- Adjacent control point *name* is not a valid node type.
- NCP frame relay switching equipment set (FRSESET) *name* has the same name as another FRSESET in this domain.
- Resource *name* contains one of the following errors:
  - *name* has the same name as another resource in this domain.
  - *name* has the same network address as another resource in this domain.
  - *name* has the same value for CPNAME as another resource in this domain.
  - *name* has the same value for LUALIAS as another resource in this domain.
  - *name* has the same values for IDBLK and IDNUM as another resource in this domain.
  - *name* is in an NCP major node definition, and there is a CDRM definition with the same SUBAREA address as the NCP major node definition.
  - *name* has a value for VNNAME that matches the value for CPNAME on a PU in this domain.
  - *name* has a value for VNNAME that refers to an ADJCP for which VN=YES is not specified.
  - *name* has the same transmission group number (TGN) as another resource in this domain.
- Storage is not available to process the request.

See Chapter 14, "Command and RU types in VTAM messages" on page 685 for a description of *command*.

If *name* is session-capable, VTAM issues *name* as a network-qualified name in the form *netid.name*.

System Action: Processing of *command* continues. However, VTAM cannot use *name*.

Operator Response:

- This is usually a definition error. Enter a DISPLAY ID command for *name* to check for duplicate names. Save the system log for problem determination.

- If you cannot find a definition error, check for an insufficient storage problem by entering the DISPLAY BFRUSE command. Total VTAM private storage information is also displayed in message IST981I. Enter the DISPLAY STORUSE command to display storage usage for storage pools. Save the system log and request a dump for problem determination.

This message may be issued during session takeover processing. See the section on common APPN problems in the *z/OS Communications Server: SNA Diagnosis Vol 1, Techniques and Procedures* for a description of session takeover problems.

Programmer Response:

- If the definition failed because of a definition error, use the system log to assist you in correcting the problem. If there are duplicate operands on NCP and VTAM definition statements, you must change one or both of the duplicate statements if you want both resources to be defined at the same time. See the section on common APPN problems in *z/OS Communications Server: SNA Diagnosis Vol 1, Techniques and Procedures* for more information about this problem. See the *z/OS Communications Server: SNA Resource Definition Reference* for more information on VNNAME definitions.
- If the definition failed because of insufficient storage, increase storage as required for the VTAM address space.
  - See the *z/OS Communications Server: SNA Migration* to determine the storage requirements for VTAM.
  - See the *z/OS Communications Server: SNA Operation* for information about the DISPLAY BFRUSE Command, and the DISPLAY STORUSE Command.
  - See the *z/OS Communications Server: SNA Diagnosis Vol 2, FFST Dumps and the VIT* for information about analyzing dumps and about analyzing storage using the VIT analysis tool, if external trace is active.

IST1273I *command2 nodename* **FAILED:** *command1* **PENDING**

Explanation: Processing of *command1* causes VTAM to reject *command2* for *nodename* because *command1* takes precedence over *command2*. For example, the VARY REL command causes any subsequent VARY INACT for the same node to fail.

See Chapter 14, “Command and RU types in VTAM messages” on page 685 for a description of *command1* and *command2*.

If *nodename* is session-capable, VTAM issues *nodename* as a network-qualified name in the form *netid.name*.

System Action: Processing of *command1* continues, but VTAM rejects *command2*.

Operator Response: Monitor the progress of *command1* with DISPLAY commands. When *command1* processing has completed, enter the command required to achieve the desired network configuration or device state.

In the above example, if you want *nodename* to be an active part of the network, enter a VARY ACQ command for *nodename* followed by a VARY ACT command for *nodename*.

Save the system log for problem determination.

Programmer Response: Check the system log to determine the series of commands that caused the problem.

IST1274I *command minornode* **FAILED:** *highernode* **NOT ACTIVE**

Explanation: VTAM issues this message when a *command* was entered to activate node *minornode* (a logical unit, physical unit, physical unit type 4, or link). The command failed because its higher-level node *highernode* is not currently in a valid state.

See Chapter 14, “Command and RU types in VTAM messages” on page 685 for a description of *command*.

minornode is a logical unit, physical unit (device or communication controller), or link.

- If *minornode* is a logical unit, *highernode* is a physical unit. VTAM issues *minornode* as a network-qualified name in the form *netid.name*.
- If *minornode* is a physical unit (device or communication controller), *highernode* is its link.
- If *minornode* is a link, *highernode* is the physical unit specified on the PHYSRSC operand on the GROUP definition statement for the line group.

  If the physical unit, defined in the NCP definition, whose name is specified by the PHYSRSC keyword is a switched PU that is not currently connected, then *highernode* is the physical line.

highernode must be active before *minornode* can be activated.

System Action: VTAM rejects the command.

Operator Response: Enter a VARY ACT command for *highernode* before activating *minornode*.

Programmer Response: None.

IST1275I *operand* **IGNORED ON** *command nodename*

Explanation:

Explanation: VTAM issues this message when an *operand* was entered that is not valid for the resource *nodename* specified on the *command*.

See Chapter 14, “Command and RU types in VTAM messages” on page 685 for a description of *command*.

If *nodename* is session-capable, VTAM issues *nodename* as a network-qualified name in the form *netid.name*.

System Action: Processing of *command* continues, but VTAM ignores *operand*.

Operator Response: You do not need to reenter the command. For the next use of the command, check the valid operands for the command in *z/OS Communications Server: SNA Operation*.

Programmer Response: None.

IST1276I *cdrscname status* **CDRM =** *cdrmname*

Explanation: This message is part of a group of messages that VTAM issues in response to a DISPLAY command for cross-domain resources. It results from one of the following:

- A DISPLAY ID command that specifies a CDRSC major node
- A DISPLAY CDRSCS command requesting information about cross-domain resources defined to this domain.

The message lists the resource name *cdrscname*, the status of *cdrscname*, and the name of the controlling CDRM *cdrmname*. If the CDRM is not available, *cdrmname* is *****NA*****.

VTAM issues *cdrscname* as a network-qualified name in the form *netid.name*.

VTAM repeats this message as many times as needed to list all the cross-domain resources in this major node or domain. See the *z/OS Communications Server: IP and SNA Codes* for a description of *status*.

System Action: Processing continues.

Operator Response: None.

Programmer Response: None.

IST1277I *commandinfo* **[***statementname***]** *action resource* **[TO** *toname***] [FROM** *fromname***] FAILED**

Explanation: This message is the first in a group of messages that VTAM issues to indicate that a dynamic reconfiguration or dynamic change failed. The failure resulted from one of the following commands:

- MODIFY DR command
- VARY ACT command
- VARY DRDS command

Possible message groups follow:

1. **MODIFY DR command**

```
IST1277I MODIFY DR action resource [TO toname] FROM fromname FAILED
IST523I  REASON = reason
IST314I  END
```

IST1277I

commandinfo is always **MODIFY DR** for this message group.

action is the command type:

– **DELETE** to delete a physical or logical unit
– **MOVE** to move a physical unit and its associated LUs.

resource is the name of the physical unit or logical unit affected by the command. If the resource is a logical unit, VTAM issues *resource* as a network-qualified name in the form *netid.name*.

toname is the name of the line to which the PU is being moved, and is only displayed when *action* is **MOVE**.

fromname is the name of the line from which the PU is being moved or deleted, or the name of the PU from which the LU is being deleted.

IST523I

This message explains the reason for the failure. Possible values of *reason* are explained later in this message explanation.

2. **VARY DRDS command**

```
IST1277I DR drname [statementname] action resource [TO toname]
         [FROM fromname] FAILED
IST523I  REASON = reason
IST368I  FUNCTION GROUP functiongroup FAILED
IST314I  END
```

IST1277I

commandinfo is always **DR** *drname* for this message group. *drname* is the name of the dynamic reconfiguration data set containing the reconfiguration definition statements.

statementname, if specified, is the name of the specific definition statement that failed.

action is the definition statement:
– **ADD** to add a physical or logical unit
– **DELETE** to delete a physical or logical unit
– **MOVE** to move a physical unit and its associated LUs.

resource is the name of the physical unit or logical unit affected by the definition statement. If the resource is a logical unit, VTAM issues *resource* as a network-qualified name in the form *netid.name*.

toname is the name of the line to which the PU is being moved or added, or the name of the PU to which the LU is to be added. *toname* is only displayed when *action* is MOVE or ADD.

fromname is the name of the line from which the PU is being moved or deleted, or the name of the PU from which the LU is being deleted. *fromname* is only displayed when *action* is **MOVE** or **DELETE**.

IST523I

This message explains the reason for the failure. Possible values of *reason* are explained later in this message explanation.

IST368I

This message names the specific definition statement in the dynamic reconfiguration data set that failed.

functiongroup is the name on the ADD, DELETE, or MOVE definition statement in the VARY DRDS deck of the specific definition statement that failed.

3. **VARY ACT command**

```
IST1277I DR drname [statementname] action resource
         [TO toname] [FROM fromname] FAILED
IST523I  REASON = reason
IST314I  END
```

IST1277I

commandinfo is always **VARY ACT** for this message group.

statementname is the major node name which was specified on the ID operand of the VARY ACT command.

action is the action being performed when the failure occurred:
– **ADD** to add a physical or logical unit
– **CHANGE** to change an operand value
– **DELETE** to delete a physical or logical unit
– **MOVE** to move a physical unit and its associated LUs or to move an logical unit

resource is the name of the physical unit or logical unit affected by the command. If the resource is a logical unit, VTAM issues *resource* as a network-qualified name in the form *netid.name*.

toname is the name of the line to which the PU is being moved or added, or the name of the PU to which the LU is being moved or added. *toname* is only displayed when *action* is **MOVE** or **ADD**.

fromname is the name of the line from which the PU is being moved or deleted, or the name of the PU from which the LU is being moved or deleted. *fromname* is only displayed when *action* is **MOVE** or **DELETE**.

IST523I

This message explains the reason for the failure. Possible values of *reason* follow.

The second message in each message group is IST523I, and this message explains the reason for the failure. *reason* can be one of the following:

DUPLICATE STATION ID
An attempt was made to perform a DR CHANGE of IDBLK or IDNUM for a switched PU, but the resulting station ID was not unique in the network.

DR DELETE INVALID FOR INDEPENDENT LU
An attempt was made to perform a DR DELETE on an independent LU which is not associated to the adjacent link station specified on the FROM operand. This is not a valid request.

DR NOT SUPPORTED
An attempt was made to perform a DR function for a resource that is not an NCP or is a level of NCP that does not support DR or this function of DR.

INSUFFICIENT STORAGE
VTAM was unable to allocate storage during a DR operation.

INVALID MACRO
A definition statement was read that is not a valid member in this type of definition deck. For example, a GROUP definition statement is not a valid member in a DR deck.

INVALID NAME
functiongroup is invalid for the PU or LU definition statement.

INVALID PARAMETER
An operand was found in a definition statement that is not valid or allowed.

INVALID RESOURCE CURRENT STATE
An attempt was made to move or delete a resource whose current state will not allow it. The resource must be in an inactive, reset, release, or defined state.

INVALID RESOURCE TYPE
An attempt was made to move or delete a resource for which dynamic reconfiguration is not allowed. DR ADD, DELETE and MOVE may be performed for SNA type 1, 2, or 2.1 PUs and their subordinate LUs, as well as for dependent LUs and some independent LUs.

INVALID TO/FROM RESOURCE TYPE
An attempt was made to add, delete, or move a resource to or from a target resource that does not allow dynamic reconfiguration. DR ADD is allowed to lines and PUs. DR DELETE is allowed from lines and PUs. DR MOVE is allowed both to and from lines and PUs.

INVALID VALUE
An operand on a definition statement was found to have a coded value that is invalid for this operand.

INVALID VALUE FOR ADDR
The value coded in a PU definition statement for the ADDR operand was found to be a duplicate of a PU ADDR already under the target line.

MACRO SEQUENCE ERROR
A DR definition deck contained definition statements that were out of sequence. Line targets must be followed by PUs; PU definition statements must be followed by LUs. PU definition statements must follow additions to lines, moves to lines, moves from lines, and deletions from lines. LU definition statements must follow additions to PUs, moves to PUs, and deletions from PUs.

MISSING MACRO
A DR definition deck was missing a definition statement. VBUILD definition statements are required. Null definition decks are invalid (a VBUILD definition statement with nothing following). Null function groups are invalid (a function group with no PU or LU definition statements).

MISSING NAME ON PU OR LU MACRO
A PU or LU definition statement in a DR definition deck did not have a name coded. The name is required on all PU and LU resources being added, deleted, or moved.

MISSING PARAMETER
A definition statement in a DR definition deck did not contain a required operand.

NO RESOURCES FOUND UNDER FROM LINE/PU
The line or PU resource for which a DR DELETE or DR MOVE function was requested had no resources under it.

PUTYPE CANNOT BE CHANGED DYNAMICALLY
An attempt was made to change the value of PUTYPE on the specified resource.

RESOURCE NOT FOUND WHERE SPECIFIED
An attempt was made to delete or move a resource that does not exist under the specified target *fromname*.

SYNTAX ERROR
There is a syntax error in the DR definition deck.

TO/FROM RESOURCE NOT IN SAME NCP
An attempt was made to DR move a PU or LU from a line in an NCP to a line in a different NCP.

TO/FROM RESOURCE UNKNOWN
An attempt was made to add or move a resource to a target that does not exist or to delete or move a resource from a target that does not exist.

System Action:

- For MODIFY DR, processing of that command is terminated.
- For VARY DRDS, the *functiongroup* specified in IST368I is not processed. Any other function groups in the DR data set *drname* are processed.
- For VARY ACT, the remaining definition statements are processed unless the *resource* is a PU. In that case, the LUs subordinate to *resource* are not processed.

Operator Response: Enter a DISPLAY command for *resource* in message IST886I. Save the system log for problem determination.

If *reason* is **INSUFFICIENT STORAGE**, enter the DISPLAY BFRUSE or DISPLAY STORUSE command. Save the system log and request a dump for problem determination.

Programmer Response: Use the output from the operator to correct the command issued and the definition statements (if appropriate).

If *reason* is **INSUFFICIENT STORAGE**, increase storage as required. For insufficient storage errors, you might want to redefine your buffer pool or CSA start options. If the start option cannot be modified using the MODIFY VTAMOPTS command, you must modify the VTAM start options file (ATCSTRxx) and restart VTAM to use the start option.

- See the *z/OS Communications Server: SNA Migration* to determine the storage requirements for VTAM.
- See the *z/OS Communications Server: SNA Resource Definition Reference* for a description of VTAM start options.
- See the *z/OS Communications Server: SNA Operation* for information about the DISPLAY BFRUSE Command, the DISPLAY STORUSE Command, and the MODIFY VTAMOPTS Command.
- See the *z/OS Communications Server: SNA Network Implementation Guide* for an explanation and description of buffer pools and for general information on buffer pool specification and allocation.
- See the *z/OS Communications Server: SNA Diagnosis Vol 2, FFST Dumps and the VIT* for information about analyzing dumps and about analyzing storage using the VIT analysis tool, if external trace is active.

IST1278I *runame* **FROM** *fromnetid* **TO** *tonetid* **FOR** *fornodename*

Explanation: This message is part of a group of messages that VTAM issues when the request unit (RU) *runame* has been pending on the node *fornodename* for a period of time without receipt of a corresponding response unit. The first message in the group is IST1436I. See the description of that message for more information.

IST1279I *resourcename* **NOT UPDATED,** *operand* **AND CDRSC CONFLICT**

Explanation: VTAM issues this message when a MODIFY DIRECTRY,UPDATE command is processed for a CDRSC major node that contains a CDRSC with the same name as the resource specified on the CPNAME or NETSRVR operand.

The resource specified on either the CPNAME or NETSRVR operand cannot be the same name as the CDRSC that is being updated. Either an incorrect value was entered for the CPNAME or NETSRVR operand, or a CDRSC is incorrectly defined.

resourcename is the network-qualified name of the CDRSC being updated in the form *netid.name*.

operand is either **CPNAME** or **NETSRVR** and indicates the operand that was specified on the command.

System Action: The CDRSC *resourcename* is not updated. Other processing continues.

Operator Response: Verify that the resource specified on either the CPNAME or NETSRVR operand was correct and reenter the command. If problems persist, save the system log for problem determination.

Programmer Response: Check the definition library to ensure that the CDRSC definition is correct. If necessary, change the CDRSC definition so that it can be defined as an owning CP or a network node server.

IST1280I **SESSION TYPE =** *sessiontype* **– SENSE =** *code*

Explanation: VTAM issues this message as part of a group of messages. The first message in the group is either IST1110I or IST1097I. See the explanation of the appropriate message for a complete description.

IST1281I *luname* **ON** *command* **MUST BE NETWORK QUALIFIED**

Explanation: VTAM issues this message in response to a MODIFY *command*. *luname* must be a network-qualified name because the application program that is in session with *luname* is using network-qualified names.

luname is the name of the logical unit that is specified on the MODIFY command.

command is the MODIFY command that is entered and is either **F CNOS** or **F DEFINE**.

System Action: The command failed. Other processing continues.

Operator Response:

- Reenter the MODIFY command with the required network-qualified name specified as *netid.luname*.
- If the network ID is not known, you can enter a DISPLAY,CNOS command or DISPLAY,CONVID command specifying *luname* on the LUNAME operand. VTAM displays all logical units with the specified name that are associated with the application program and the network ID of each logical unit.

Programmer Response: None.

IST1282I **MESSAGE FROM** *exitname* **IN** *modulename*

Explanation: VTAM issues this message as part of a message group when an exit (for example, the session management exit, ISTEXCAA) calls VTAM Exit Services to issue a message on the system console. A complete description of the message group follows.

Note: If VTAM detects an error in attempting to issue message IST1405I, message IST1455I may be issued. See the explanation of that message for a complete description.

```
 IST1282I  MESSAGE FROM exitname IN modulename
 IST1405I      data
⋮
[IST1405I     data]
 IST314I   END
```

IST1282I

exitname is the CSECT name of the exit, for example, ISTEXCAA, that provided the text for the message.

modulename is the name of the load module that contains exit *exitname*.

IST1405I

data is up to 56 characters of text provided by *exitname*.

One or more IST1405I messages will be issued until all of the text provided by *exitname* has been displayed. The maximum amount of text displayed in one message group is 4096 characters (approximately seventy-four IST1405I messages).

System Action: Processing continues.

Operator Response: Save the complete text of the message group for problem determination.

Programmer Response: If you have questions regarding *data*, contact the author of *exitname*. See *z/OS Communications Server: SNA Customization* for information on *exitname*.

IST1283I MODIFY USERVAR COMMAND COMPLETE

Explanation: This message is the first in a group of messages that VTAM issues in response to a MODIFY USERVAR command when the USERVAR has previously been defined. Possible message groups follow.

Note: The following messages are percolated. See “Message rerouting and percolation” on page 710 for additional information.

1. If MSGLVL=V4R1 or above is specified, the following message group is displayed:

```
 IST1283I MODIFY USERVAR COMMAND COMPLETE
[IST1150I uservar CHANGED: value1 TO value2]
[IST1030I USERVAR EXIT IS exitname]
[IST973I  USERVAR uservar {CLASS HAS BEEN CHANGED FROM AUTO TO USER|
          TYPE HAS BEEN CHANGED FROM type TO type}]
 IST314I  END
```

2. If MSGLVL=BASE is specified or taken as the default, the following message group is displayed:

```
 IST1283I MODIFY USERVAR COMMAND COMPLETE
[IST813I  USERVAR uservar CHANGED FROM value1 to value2]
[IST1030I USERVAR EXIT IS exitname]
[IST973I  USERVAR uservar {CLASS HAS BEEN CHANGED FROM AUTO TO USER|
          TYPE HAS BEEN CHANGED FROM type TO type}]
 IST314I  END
```

See the *z/OS Communications Server: SNA Resource Definition Reference* for a description of the MSGLEVEL start option and for a description of the MSGLVL operand on the USSMSG macro.

IST813I

If network-qualified names are not displayed, VTAM issues this message when the value of *uservar* has been changed.

value1 is the original value of *uservar*.

value2 is the new value of *uservar*.

Any subsequent session requests to *uservar* are routed to the application named in *value2*.

IST973I

VTAM issues this message when one or both of the following has occurred:

– **CLASS HAS BEEN CHANGED FROM AUTO TO USER**

  The MODIFY command was entered for a USERVAR that was being managed automatically by VTAM, thereby changing the class to user-managed.

  Note: VTAM no longer manages the updating or deletion of this USERVAR.

– **TYPE HAS BEEN CHANGED FROM** *type* **TO** *type*

  The type of a user-managed USERVAR has been changed.

type can be **STATIC**, **DYNAMIC**, or **VOLATILE**.

IST1030I

VTAM issues this message if the USERVAR exit is associated with *uservar*.

exitname is the name of the USERVAR exit.

If no USERVAR exit is defined, VTAM does not issue this message.

IST1150I

If network-qualified names are displayed, VTAM issues this message when the value of *uservar* has been changed.

value1 is the original value of *uservar*. If a network-qualified name was entered on the previous MODIFY command, VTAM issues *value1* as a network-qualified name in the form *netid.name*.

value2 is the new value of *uservar*. If a network-qualified name was entered on the current MODIFY command, VTAM issues *value2* as a network-qualified name in the form *netid.name*.

Any subsequent session requests to *uservar* are routed to the application named in *value2*.

IST1283I

This message indicates that the MODIFY USERVAR command completed successfully.

System Action: Processing continues.

Operator Response: None.

Programmer Response: None.

IST1284I LUALIAS *lualias* **IS** *nodename* **FOR APPLICATIONS**

Explanation: This message is part of a group of messages that VTAM issues in response to the following commands:

- DISPLAY ID command when the resource name specified on the ID operand is the name of an LUALIAS.
- DISPLAY SESSIONS command when either or both of the LU names specified on the command has been defined as an LUALIAS.

The first message in the group is IST075I.

lualias is the LUALIAS name defined for the resource *nodename*.

nodename is the network-qualifed name of the cross-domain resource (CDRSC) in the form *netid.name*.

If *nodename* does not identify the same resource as displayed in message IST075I, use of the name *lualias* will not always identify the same resource.

For example, application programs in this domain that use the name *lualias* will identify *nodename*. However, other logical units and operator commands that use the name *lualias* will not identify *nodename*, but they identify the resource displayed in IST075I.

System Action: Processing continues.

Operator Response: If *nodename* (in this message) does not identify the same resource as displayed in message IST075I, save the system log for problem determination.

Programmer Response: If *nodename* (in this message) does not identify the same resource as displayed in message IST075I, rename the LUALIAS for *nodename* because this name is already the real name of a resource.

IST1285I ADDRESS FOR *cdrscname* **DELETED FROM** *alsname*

Explanation: VTAM issues this message in response to an address mismatch error. VTAM attempts to delete cross-domain resource *cdrscname* that was generated under adjacent link station *alsname*. This message indicates that *cdrscname* was deleted.

If the PU for *alsname* is not found,

System Action: Processing continues.

Operator Response: None.

Programmer Response: None.

IST1286I SHADOW PROCESSING FAILED, *majornode* **–** *minornode* **RESET**

Explanation: This message is the first in a group of messages that VTAM issues when a shadow resource (*minornode*) cannot be activated because it has the same LUALIAS name as another active resource. A complete description of the message group follows.

```
IST1286I SHADOW PROCESSING FAILED, majornode – minornode RESET
IST1287I FAILURE REASON IS LUALIAS luasliasname ALREADY IN USE
IST314I  END
```

IST1286I

majornode is the name of the major node that contains the minor node *minornode*.

minornode is the network-qualified name of the resource that is in reset state due to the LUALIAS name conflict.

IST1287I

lualiasname is the duplicate LUALIAS name.

System Action: VTAM deletes the shadow resource *minornode* and sets its state to reset. Other processing continues.

Operator Response: If you want to activate *minornode*, deactivate the active resource with the defined LUALIAS name. Then, deactivate and reactivate major node *majornode*.

Otherwise, no action is necessary. The state of *minornode* is reset, and the active resource with the LUALIAS name remains active.

Programmer Response: Ensure that your LUALIAS names are unique. See the *z/OS Communications Server: SNA Network Implementation Guide* for a description of shadow resources.

IST1287I FAILURE REASON IS LUALIAS *lualiasname* **ALREADY IN USE**

Explanation: VTAM issues this message as part of a message group. The first message in the group is IST1286I. See that message for a complete description.

IST1288I TOPOLOGY DATASET RETRIEVAL WAS NOT SUCCESSFUL, CODE = *code*

Explanation: VTAM issues this message when topology data from a previously saved dataset could not be read successfully.

This message is issued primarily for information and does not indicate a loss of processing ability. If you see this message every time you start VTAM, this indicates that it will take longer to set up your first few sessions.

code indicates the reason for the error and is one of following:

Code	Error
1	Insufficient storage.
2	The disk file is undefined.
4	Disk I/O errors occurred. These errors are reported in a separate message(s) issued prior to this message.
8	The dataset recovery task abended. This message is issued with no further attempt at dataset recovery.
9	The previously saved dataset was incomplete.
10	The topology and routing services task abended while attempting to recover topology from the database.
11	The topology and routing services dataset was found, but the dataset will be ignored because there is a name conflict.

12 The topology and routing services dataset will be ignored because the dataset was saved in a format that is not supported by VTAM.

System Action: Processing continues.

Operator Response:

Code(s)

Error

1 Enter the DISPLAY STORUSE command to display storage usage for storage pools. Message IST981I displays total VTAM private storage information. If this message does not appear in the display, you may need to reissue the DISPLAY STORUSE command, specifying a higher value for the NUM operand. See the *z/OS Communications Server: SNA Operation* for additional information.

Save the system log and request a dump for problem determination.

2, 9, 11, 12
Save the system log for problem determination.

4, 8, 10
Save the system log and request a dump for problem determination.

Programmer Response:

Code	Error
1	Increase storage as required. See the *z/OS Communications Server: SNA Operation* and the *z/OS Communications Server: SNA Diagnosis Vol 1, Techniques and Procedures* for additional information. See the *z/OS Communications Server: SNA Diagnosis Vol 2, FFST Dumps and the VIT* for information about analyzing dumps and about analyzing storage using the VIT analysis tool, if external trace is active.
2	You must define the missing disk file TRSDB. See the applicable sequential access method documentation and the *z/OS Communications Server: SNA Migration* for additional information.
4	See the applicable sequential access method documentation for more information.
8	See the applicable sequential access method documentation for more information.
9	This code indicates that no action was taken to correct an earlier problem identified in message IST1122I during a previous VTAM checkpoint. You may want to check the system log for the last time you issued the MODIFY CHKPT command to review the information in message IST1122I.
10	Review the contents of the system dump to determine the correct problem determination action.
11	This code indicates that the dataset cannot be used because it was saved under a different control point name. VTAM will not read the dataset, but will write to it. The next time a MODIFY CHKPT command is entered, the old dataset will be replaced with the new one.
12	This code indicates that the dataset cannot be used because it was saved in a format that is not supported by VTAM. The next time a MODIFY CHKPT command is entered, the dataset will be reformatted and can be used.

IST1289I FRSESET *frsesetname* **PHYSICAL UNITS:**

Explanation: This message is part of a group of messages that VTAM issues in response to a DISPLAY ID command for an NCP frame relay switching equipment set (FRSESET) or an NCP frame relay physical unit. Possible message groups follow.

1. If the FRSESET statement was coded, the following message group is issued.

```
 IST075I  NAME = frsesetname, TYPE = STATIC FRSESET
 IST1289I FRSESET frsesetname PHYSICAL UNITS:
 IST080I  primary_pu1 status  primary_pu2 status
[IST080I [backup_pu1 status] [backup_pu2 status]]
 IST314I  END
```

2. If the FRSESET statement was added dynamically using the VARY ACT,UPDATE=ALL command, the following message group is issued.

The second message in this group is IST1290I, IST1291I, IST1292I, or IST1294I, and indicates whether the FRSESET has been sent to the NCP.

```
 IST075I  NAME = frsesetname, TYPE = DYNAMIC FRSESET
[IST1290I FRSESET HAS BEEN SUCCESSFULLY SENT TO NCP ncpname]
[IST1291I FRSESET WILL BE SENT TO THE NCP DURING PU ACTIVATION]
[IST1292I FRSESET WILL NOT BE SENT TO THE NCP DUE TO DEFINITION ERROR]
[IST1294I FRSESET HAS BEEN SENT TO NCP ncpname BUT FAILURE OCCURRED]
 IST1289I FRSESET frsesetname PHYSICAL UNITS:
 IST080I  primary_pu1 status  primary_pu2 status
[IST080I  [backup_pu1 status] [backup_pu2 status]]
 IST314I  END
```

3. If the display is for an NCP frame relay physical unit, the following message group is issued.

```
 IST075I  NAME = puname, TYPE = PU_T1
 IST486I  STATUS = currentstatus, DESIRED STATE = desiredstate
 IST081I  LINE NAME = linename, LINE GROUP = linegroup, MAJNOD = majnode
 IST1289I FRSESET frsesetname PHYSICAL UNITS:
 IST080I  primary_pu1 status   primary_pu2 status
[IST080I [backup_pu1 status] [backup_pu2 status]]
 IST654I  I/O TRACE = {ON|OFF},  BUFFER TRACE = {ON|OFF}
 IST355I  LOGICAL UNITS:
 IST080I  nodename1 status1  nodename2 status2  nodename3 status3
 IST314I  END
```

IST075I

In message groups 1 and 2, *frsesetname* is the name of the NCP frame relay switching equipment set (FRSESET) specified on the ID operand of the command.

In message group 3, *puname* is the name of the physical unit specified on the ID operand of the command and is always a PU type 1.

IST080I

If this message follows IST1289I, it displays the names of the primary and backup physical units defined for FRSESET *frsesetname*.

Backup PUs are optional, and one or both backup PUs can be specified. If only one backup PU is specified, VTAM displays the name and status of the specified backup PU and leaves the other field blank. If no backup PUs are specified, the message is not displayed.

primary_pu1 is the name of the first PU specified on the SUBPORTS operand of the FRSESET definition statement.

primary_pu2 is the name of the second PU specified on the SUBPORTS operand of the FRSESET definition statement.

backup_pu1, if specified, is the name of the third PU on the SUBPORTS operand of the FRSESET definition statement. *backup_pu1* is the backup PU for *primary_pu1*.

backup_pu2, if specified, is the name of the fourth PU on the SUBPORTS operand of the FRSESET definition statement. *backup_pu2* is the backup PU for *primary_pu2*.

If this message follows IST355I, *nodename* is the name of a logical unit.

status is the status of the resource that is displayed. See the *z/OS Communications Server: IP and SNA Codes* for a description of *status*.

IST081I

linename is the line to which *majnode* is connected.

groupname is the line group to which the line *linename* belongs.

majnode is the major node with which the line is associated.

IST355I

This message is a header message for IST080I when logical units and their status are displayed.

IST486I

currentstatus is the current status of the resource. See the *z/OS Communications Server: SNA Migration* for a description of *currentstatus*.

desiredstate is the resource state that is desired. See the *z/OS Communications Server: SNA Migration* for a description of *desiredstate*. if VTAM cannot determine the desired state.

IST654I

This message indicates whether the I/O trace facility is active or inactive for *puname* in message IST075I, and whether the buffer trace facility is active or inactive for *puname*.

IST1289I

frsesetname is the name of the FRSESET definition statement displayed in message IST075I.

IST1290I

This message confirms that FRSESET *frsesetname* has been successfully sent to NCP *ncpname*.

ncpname is the name of the NCP that received FRSESET *frsesetname*.

IST1291I

This message indicates that FRSESET *frsesetname* is valid and will be sent to the NCP when all PUs in the FRSESET have received positive RNAA responses.

IST1292I

This message indicates that FRSESET *frsesetname* will not be sent to the NCP. The FRSESET is not valid because of a definition error in the FRSESET or one of the PUs. Messages issued prior to this message group provide additional information about the error.

IST1294I

This message indicates that even though FRSESET *frsesetname* has been sent to NCP *ncpname*, a failure occurred that prevented successful completion.

ncpname is the name of the NCP that rejected FRSESET *frsesetname*.

Either message IST380I or message IST1139I will be issued prior to this message group to provide additional information about the cause of the failure.

System Action: Processing continues.

- If IST1291I is displayed, the FRSESET will be sent to the NCP when all PUs in the FRSESET have received positive RNAA responses.
- If IST1292I is displayed, the PUs may or may not become active. You can monitor this by checking the PU *status* in message IST080I.
- If IST1294I is displayed, VTAM deactivates the PUs in *frsesetname*.

Operator Response: None, except in the following situations:

- If IST1291I is displayed, ensure that all the PUs in the FRSESET have been activated.
- If IST1292I or IST1294I is displayed, save the system log for problem determination.

Programmer Response: None, except in the following situations:

- If IST1292I is displayed, correct the definition errors in the FRSESET or the PUs. Then add new PUs to the FRSESET using dynamic reconfiguration.
- If IST1294I is displayed, correct the error indicated by the sense code in IST380I or IST1139I. Then add new PUs to the FRSESET using dynamic reconfiguration.

For more information on the FRSESET definition statement, see the *NCP, SSP, and EP Resource Definition Reference*

For information on dynamic reconfiguration, see the *z/OS Communications Server: SNA Network Implementation Guide*.

IST1290I FRSESET HAS BEEN SUCCESSFULLY SENT TO NCP *ncpname*

Explanation: VTAM issues this message as part of a group of messages in response to a DISPLAY ID command for an NCP Frame Relay Switching Equipment Set (FRSESET). See the explanation of message IST1289I for a a complete description of the group.

IST1291I FRSESET WILL BE SENT TO THE NCP DURING PU ACTIVATION

Explanation: VTAM issues this message as part of a group of messages in response to a DISPLAY ID command for an NCP Frame Relay Switching Equipment Set (FRSESET). See the explanation of message IST1289I for a a complete description of the group.

IST1292I FRSESET WILL NOT BE SENT TO THE NCP DUE TO DEFINITION ERROR

Explanation: VTAM issues this message as part of a group of messages in response to a DISPLAY ID command for an NCP Frame Relay Switching Equipment Set (FRSESET). See the explanation of message IST1289I for a a complete description of the group.

IST1293I CMIP SERVICES IS ACTIVE

Explanation: VTAM issues this message as the result of a start option or MODIFY VTAMOPTS,OSIMGMT=YES command when VTAM CMIP services has been initialized successfully.

This message could also be issued because CMIP services has recovered after an ABEND in CMIP services. In most cases when CMIP services ABENDs, it initiates recovery automatically, as if the user had issued the MODIFY command. The message appears at the end of a successful recovery.

System Action: Processing continues with CMIP services available.

Operator Response: None.

Programmer Response: None.

IST1294I FRSESET HAS BEEN SENT TO NCP *ncpname* **BUT FAILURE OCCURRED**

Explanation: VTAM issues this message as part of a group of messages in response to a DISPLAY ID command for an NCP Frame Relay Switching Equipment Set (FRSESET). See the explanation of message IST1289I for a a complete description of the group.

IST1295I CP NAME NODETYPE ROUTERES CONGESTION CP-CP WEIGHT

Explanation: VTAM issues this message as part of a group of messages in response to a DISPLAY TOPO command. Possible message groups follow.

1. This message group is issued in response to the following commands:
   - DISPLAY,TOPO,ID=*cpname*
   - DISPLAY,TOPO,ID=*cpname*,LIST=ADJ
   - DISPLAY,TOPO,LIST=CDSERVR
   - DISPLAY,TOPO,LIST=ICN
   - DISPLAY,TOPO,LIST=VN
   - DISPLAY,TOPO,LIST=EN
   - DISPLAY,TOPO,LIST=NN
   - DISPLAY TOPO,ID=cpname,LIST=ALL (when it is issued at an end node and the ID specified is not the local end node)

```
 IST350I   DISPLAY TYPE = TOPOLOGY
[IST1348I  VTAM STARTED AS nodetype]
[IST1805I  ONLY LOCAL TOPOLOGY INFORMATION IS AVAILABLE]
[IST1803I  parameter PARAMETER VALUE NOT VALID - DEFAULT default USED]
[IST1804I  parameter PARAMETER NOT VALID - IGNORED]
 IST1295I  CP NAME           NODETYPE ROUTERES CONGESTION  CP-CP WEIGHT
 IST1296I  cpname            nodetype routeres congestion  cp-cp weight
:
IST314I   END
```

2. This message group is issued in response to a DISPLAY,TOPO,ID=*cpname*,LIST=ALL command:

```
 IST350I   DISPLAY TYPE = TOPOLOGY
 IST1295I  CP NAME           NODETYPE ROUTERES CONGESTION  CP-CP WEIGHT
 IST1296I  cpname            nodetype routeres congestion  cp-cp weight
 IST1579I                    ----------------------------------------
 IST1297I                    ICN/MDH  CDSERVR  RSN         HPR
 IST1298I                    icn/mdh  cdservr  rsn         option
 IST1579I                    ----------------------------------------
 IST1223I                    BN       NATIVE   TIME LEFT   LOCATE SIZE
 IST1224I                    bn       native   time_left   locate_size
[IST1784I  LAST TDU RECEIVED - NONE]
[IST1769I  LAST TDU RECEIVED - date time FROM adjacent_cp]
[IST1770I  TDU COUNTS RESET - date time]
[IST1771I  SENT     - sent   RECEIVED - received  ACCEPTED - accepted]
[IST1772I  REJECTED - rejected IGNORED  - ignored]
 IST1299I  TRANSMISSION GROUPS ORIGINATING AT CP cpname
 IST1357I                                                  CPCP
 IST1300I  DESTINATION CP    TGN      STATUS   TGTYPE      VALUE WEIGHT
 IST1301I  destcpname        tgn      status   tgtype      cpval weight
⋮
 IST314I   END
```

3. This message group is issued in response to the following commands:
   - DISPLAY,TOPO,ORIG=*cpname*,DEST=*cpname*
   - DISPLAY,TOPO,ORIG=*cpname*,TGN=*tgn*

```
 IST350I   DISPLAY TYPE = TOPOLOGY
 IST1299I  TRANSMISSION GROUPS ORIGINATING AT CP cpname
 IST1357I                                                  CPCP
 IST1300I  DESTINATION CP    TGN      STATUS   TGTYPE      VALUE WEIGHT
 IST1301I  destcpname        tgn      status   tgtype      cpval weight
 IST1579I                    ----------------------------------------
 IST1163I                    RSN               HPR         TIME LEFT
 IST1164I                    rsn               hpr         time_left
 IST1579I                    ----------------------------------------
 IST1302I                    CAPACITY PDELAY   COSTTIME    COSTBYTE
 IST1303I                    capacity pdelay   costtime    costbyte
 IST1579I                    ----------------------------------------
 IST1304I                    SECURITY UPARM1   UPARM2      UPARM3
 IST1305I                    security uparm1   uparm2      uparm3
 IST1579I                    ----------------------------------------
 IST1736I                    PU NAME
 IST1737I                    puname
[IST1784I  LAST TDU RECEIVED - NONE]
[IST1769I  LAST TDU RECEIVED - date time FROM adjacent_cp]
[IST1770I  TDU COUNTS RESET - date time]
[IST1771I SENT     - sent   RECEIVED - received  ACCEPTED - accepted]
[IST1772I  REJECTED - rejected IGNORED  - ignored]
 IST314I   END
```

IST1163I

This message is a header message for information displayed in IST1164I.

IST1164I

rsn is the resource sequence number (RSN) of Transmission Group *tgn* expressed in decimal.

– Displaying the RSN for a resource provides information about VTAM's current knowledge of that resource.

– For example, if a display of a resource from two different VTAMs indicates different RSNs for the same resource, one VTAM may have backlevel information. This mismatch may indicate a problem.

hpr can be YES or NO.

– *hpr* indicates whether the TG is allowed to use rapid transport protocols (RTP).

– For additional information on the meaning of *hpr*, see the description of message IST1482I.

time left is the number of days remaining until the TG is removed from the topology database (garbage collected), if the TG is either inoperative or has an odd-numbered *rsn*. An operational TG with an even-numbered *rsn* will not

be removed from the database until the node itself is removed from the database, or until a topology database update is received with an indication that the TG should be removed.

IST1223I

This message is a header message for information displayed in IST1224I.

IST1224I

bn indicates whether the node is a border node. Values can be **YES** or **NO**. *bn* will have the value **YES** if the node has the border node function enabled and the node has at least one active intersubnetwork link. For VTAM, the border node function is enabled by coding BN=YES as a VTAM start option.

NATIVE can be the following values:

YES *bn* is **YES**, and this node and the node issuing the display are in a subnetwork sharing topology information.

NO *bn* is **YES**, and this node and the node issuing the display are not in a subnetwork sharing topology information.

NA *bn* is **NO**.

time left is the number of days remaining until the node entry is removed from the topology database (garbage collected).

locate_size is the maximum APPN Locate message size supported by the node. Possible values are:

*nnn***K** The valid range for *nnn* is 1–128 expressed in kilobytes.

IST1295I

This message is a header message for information displayed in IST1296I.

IST1296I

cpname is the name of the control point (CP) specified on the command and is a network-qualified name in the form *netid.name*.

nodetype is the value that was specified on the NODETYPE start option and is the node type of *cpname*. Possible values are:

EN End node
NN Network node
VN Virtual node
GVRN Global Virtual Routing Node

If **UNKNOWN** is displayed, this indicates that the topology database has received conflicting information about *cpname* and is in the process of determining the type of node. This is a temporary situation, and the type of node should be available within a short time.

routeres is route resistance. This is a user-defined value specified on either the start command or in the start list and indicates the desirability of using *cpname* in intermediate routes.

– Possible values are 0–255. A smaller value indicates higher desirability.
– ***NA*** is displayed if *cpname* is an end node. End nodes are not involved in intermediate routing. ***NA*** is also displayed if *cpname* is a local virtual node. The weight of a local virtual node is always 0, so *routeres* is not involved in path weight calculation.
– See the *z/OS Communications Server: SNA Resource Definition Reference* for a description of the ROUTERES start option.

congestion provides session congestion information about *cpname*. Possible values are:

NONE Indicates that there is no session congestion for *cpname*.

NODE Indicates that *cpname* is at its session limit.

TDU Indicates that a large amount of topology database update traffic is queued for the CP-CP session to *cpname*.

NODE/TDU
Indicates that *cpname* is at its session limit **and** a large amount of topology database update traffic is queued for the CP-CP session to *cpname*.

*****NA*****
*****NA***** is displayed if *cpname* is an end node. End nodes are not involved in intermediate routing. *****NA***** is also displayed if *cpname* is a local virtual node. The weight of a local virtual node is always 0, so congestion is not involved in path weight calculation.

TDU and **NODE/TDU** are displayed only when both of the following are true:
– LIST=ADJ is specified on the command.
– The node specified on the ID operand of the command is the node at which the command is entered (the host node).

cp-cp indicates whether a CP-CP session is active. Possible values are ***NA***, **YES**, or **NO**. ***NA*** is displayed if *cpname* is a virtual node or if *cpname* is the node issuing the command.

weight represents the actual weight of *cpname* as calculated by VTAM using the node and class-of-service (COS) definitions. The value of 32767 is displayed when a node is not operational or does not meet the COS requirements specified by the APPNCOS parameter in the DISPLAY TOPO command.
– The weight of *cpname* is a measure of the relative desirability of choosing that resource in the route selection process and is 0–255 or 32767.
– See the *z/OS Communications Server: SNA Resource Definition Reference* for additional information on coding APPN class-of-service definitions.

IST1297I
This message is a header message for information displayed in IST1298I.

IST1298I
icn/mdh indicates whether *cpname* is an interchange node (ICN) or a migration data host (MDH). Possible values are **YES** or **NO**.
– *cpname* is an interchange node if NN is specified on the NODETYPE start option, and HOSTSA is specified.
– *cpname* is a migration data host if EN is specified on the NODETYPE start option, and HOSTSA is specified.

cdservr indicates whether *cpname* is a central directory server and is either **YES** or **NO**.

rsn is the resource sequence number (RSN) of *cpname* expressed in decimal.

Displaying the RSN for a resource provides information about VTAM's current knowledge of that resource.

For example, if a display of a resource from two different VTAMs indicates different RSNs for the same resource, one VTAM has backlevel information. This mismatch may indicate a problem.

option is the value that was coded for the HPR start option. Possible values are:
NONE This VTAM node has no HPR capabilities.
ANR This VTAM node provides ANR routing and can only function as an intermediate node in an RTP connection.
RTP This VTAM node has all the capabilities of an ANR node and it can function as endpoints for RTP connections. For additional information on the meaning of the values for the HPR, see the description of message IST1482I.

IST1299I
This message is a header message for information displayed for CP *cpname*.

IST1300I
This message is a header message for information displayed in IST1301I.

IST1301I
destcpname is the CP name of the TG destination and is a network-qualified name in the form *netid.name*.

tgn is the TG number. Possible values are 0–255.

status is the current state of the TG and is **OPER** (operational), **INOP** (not operational), or **QUIES** (quiescent).

tgtype is **ENDPT VRTG** (endpoint), **INTERM VRTG** (intermediate routing), or **INTERCLUST** (intercluster or intersubnetwork link), **ENDPT** (endpoint), or **INTERM** (intermediate routing).

cpcpvalue indicates whether this connection supports CP-CP sessions.

weight represents the actual weight of TG *tgn* as calculated by VTAM using the TG, TG profile, and class-of-service (COS) definitions. The value of 32767 is displayed when a TG is not operational or does not meet the COS requirements specified by the APPNCOS parameter in the DISPLAY TOPO command.

The weight of TG *tgn* is a measure of the relative desirability of choosing that resource in the route selection process and is 0–255 or 32767.

See the *z/OS Communications Server: SNA Resource Definition Reference* for additional information about coding TG profiles and APPN class-of-service definitions.

IST1302I

This message is a header message for information displayed in IST1303I.

IST1303I

capacity is a user-defined value that can be specified on the GROUP, LINE, PU, or TGP definition statements. This value represents the number of bits per second that the link will transmit. Possible values are:

*nnnn***K**
: The valid range for *nnnn* is 1–1000 expressed in kilobits.

*nnnn***M**
: The valid range for *nnnn* is 1–1000 expressed in megabits.

For additional information on the CAPACITY operand, see the *z/OS Communications Server: SNA Resource Definition Reference*.

pdelay (propagation delay) is a user-defined value that can be specified on the GROUP, LINE, PU, or TGP definition statements. This value represents the time needed for a signal to travel from one end of the link to the other. Possible values are:

NEGLIGIB
: Less than .48 microseconds.

TERRESTR
: Between .48 and 49.152 microseconds.

PACKET
: Between 49.152 and 245.76 microseconds.

LONG
: Greater than 245.76 microseconds.

For additional information on the PDELAY operand, see the *z/OS Communications Server: SNA Resource Definition Reference*.

costtime is a user-defined value that can be specified on the GROUP, LINE, PU, or TGP definition statements. This value indicates the cost of the line or node per connect time.

– Possible values are 0–255. Low values are less expensive than higher values.
– For additional information on the COSTTIME operand, see the *z/OS Communications Server: SNA Resource Definition Reference*.

costbyte is a user-defined value that can be specified on the GROUP, LINE, PU, or TGP definition statements. This value indicates the cost of the line or node per byte sent.

– Possible values are 0–255. Low values are less expensive than higher values.
– For additional information on the COSTBYTE operand, see the *z/OS Communications Server: SNA Resource Definition Reference*.

IST1304I

This message is a header message for information displayed in IST1305I.

IST1305I

security is the user-specified value that can be specified on the GROUP, LINE, PU, or TGP definition statements. This value indicates the security level of the transmission group. Possible values are:

IST1295I

ENCRYPT
Link encryption used.
GUARDED
Guarded conduit, physical only.
PUBLIC
Public switched network.
SECURE
Secure conduit, not guarded.
SHIELDED
Guarded conduit, physical and radiation shielded.
UNSECURE
Not secure.
UNDERGRO
Underground cable, not guarded.

For additional information on the SECURITY operand, see the *z/OS Communications Server: SNA Resource Definition Reference*.

uparm1, *uparm2*, and *uparm3* are user-defined parameter values. The user determines the meaning of these values, and the valid range is 0-255.

For additional information on the UPARM1, UPARM2, and UPARM3 operands, see the *z/OS Communications Server: SNA Resource Definition Reference*.

IST1348I

nodetype indicates the node type of this host and is determined by start options that are specified. Possible values are END NODE or MIGRATION DATA HOST

IST1357I

This message is a header message for information displayed in IST1301I.

IST1579I

This message is a separator line to aid readability of the display.

IST1736I

This message is a header message for information displayed in IST1737I.

IST1737I

puname is the name of the physical unit.

IST1769I

date is the date of the most recent TDU received. The format of *date* is based on the DATEFORM start option and can be one of the following:

DATEFORM|DATEFRM=DMY
date is **DD/MM/YY**.

DATEFORM|DATEFRM=MDY (default)
date is **MM/DD/YY**.

DATEFORM|DATEFRM=YMD
date is **YY/MM/DD**.

time is the time (hh:mm:ss) of the most recent TDU received and is expressed in the 24-hour system. For example, 1:00 p.m. is displayed as 13:00:00.

adjacent_cp is the network-qualified CP name of the adjacent node that sent the TDU.

IST1770I

This message contains the date and time when all the TDU statistics counters were RESET.

date is the date that the TDU counts were reset. The format of *date* is based on the DATEFORM start option and can be one of the following:

DATEFORM|DATEFRM=DMY
date is **DD/MM/YY**.

DATEFORM|DATEFRM=MDY (default)
date is **MM/DD/YY**.

DATEFORM|DATEFRM=YMD
date is **YY/MM/DD**.

time is the time (hh:mm:ss) when all TDU counts were reset. They are expressed in the 24-hour system. For example, 1:00 p.m. is displayed as 13:00:00.

IST1771I

sent is the number of TDUs about the resource sent since the last TDU counts were reset.

received is the number of TDUs about the resource received since the last TDU counts were reset.

accepted is the number of TDUs about the resource accepted since the last TDU counts were reset. The TDUs contain new information about the resource and the topology database was updated.

IST1772I

rejected is the number of TDUs about the resource rejected since the last TDU counts were reset. The TDUs were rejected because the TDUs contain outdated information about the resource. TDUs built from the local resource information were sent as corrections.

ignored is the number of TDUs about the resource ignored since the last TDU counts were reset. The TDUs were discarded because the TDUs contain no new information.

IST1784I

This message will be issued if no TDU about this resource was received.

IST1803I

This message is displayed when a DISPLAY TOPO command is issued at an end node and the parameter value displayed in this message is not valid. The default value shown in this message is used.

value is the parameter value that is not valid.

default is the default value used for the parameter.

IST1804I

This message is displayed when a DISPLAY TOPO command is issued at an end node and the parameter displayed in this message is not valid. The parameter is ignored.

parameter is the parameter that is not valid.

IST1805I

This message is displayed when a DISPLAY TOPO command is issued at an end node. The information displayed from the local topology database might be a subset of the information displayed when the same command is issued at a network node.

System Action: Processing continues

Operator Response: None

Programmer Response: None

IST1296I *cpname nodetype routeres congestion cp–cp weight*

Explanation: VTAM issues this message as part of a group of messages in response to a DISPLAY TOPO command. See message IST1295I for a complete description of possible message groups.

IST1297I ICN/MDH CDSERVR RSN HPR

Explanation: VTAM issues this message as part of a group of messages in response to a DISPLAY TOPO command. See message IST1295I for a complete description of possible message groups.

IST1298I *icn/mdh cdservr rsn option*

Explanation: VTAM issues this message as part of a group of messages in response to a DISPLAY TOPO command. See message IST1295I for a complete description of possible message groups.

IST1299I TRANSMISSION GROUPS ORIGINATING AT CP *cpname*

Explanation: VTAM issues this message as part of a group of messages in response to a DISPLAY TOPO command.

- If this message is followed by IST1300I, see the explanation of IST1295I for a description of possible message groups.
- If this message is followed by IST1308I, see the explanation of that message for a complete description of the message group.

System Action: Processing continues

Operator Response: None.

Programmer Response: None.

IST1300I DESTINATION CP TGN STATUS TGTYPE VALUE WEIGHT

Explanation: VTAM issues this message as part of a group of messages in response to a DISPLAY TOPO command. See message IST1295I for a complete description of possible message groups.

IST1301I *destcpname tgn status tgtype cpcpvalue weight*

Explanation: VTAM issues this message as part of a group of messages in response to a DISPLAY TOPO command. See message IST1295I for a complete description of possible message groups.

IST1302I CAPACITY PDELAY COSTTIME COSTBYTE

Explanation: VTAM issues this message as part of a group of messages in response to a DISPLAY TOPO command. See message IST1295I for a complete description of possible message groups.

IST1303I *capacity pdelay costtime costbyte*

Explanation: VTAM issues this message as part of a group of messages in response to a DISPLAY TOPO command. See message IST1295I for a complete description of possible message groups.

IST1304I SECURITY UPARM1 UPARM2 UPARM3

Explanation: VTAM issues this message as part of a group of messages in response to a DISPLAY TOPO command. See message IST1295I for a complete description of possible message groups.

IST1305I *security uparm1 uparm2 uparm3*

Explanation: VTAM issues this message as part of a group of messages in response to a DISPLAY TOPO command. See message IST1295I for a complete description of possible message groups.

IST1306I LAST CHECKPOINT ADJ NN EN SERVED EN CDSERVR ICN BN

Explanation: VTAM issues this message as part of a group of messages in response to a DISPLAY,TOPO,LIST=SUMMARY command. A complete description of the message group follows:

```
IST350I   DISPLAY TYPE = TOPOLOGY
IST1306I  LAST CHECKPOINT   ADJ  NN   EN   SERVED EN CDSERVR ICN  BN
IST1307I  date     time     adj  nn   en   served_en cdservr icn  bn
IST1781I  INITDB CHECKPOINT DATASET   LAST GARBAGE COLLECTION
IST1785I  initdb_date initdb_time     garbage_collect_date garbage_collect_time
IST314I   END
```

IST350I

This message identifies the type of information shown in the display and is always **TOPOLOGY** for this message group.

IST1306I

This message is the header for information displayed in message IST1307I.

IST1307I

date and *time* are displayed for **LAST CHECKPOINT**.

date is the date of the last topology data base checkpoint. The format of *date* is based on the DATEFORM start option and can be one of the following:

DATEFORM|DATEFRM=DMY
date is **DD/MM/YY**.

DATEFORM|DATEFRM=MDY (default)
date is **MM/DD/YY**.

DATEFORM|DATEFRM=YMD
date is **YY/MM/DD**.

time is the time (*hh:mm:ss*) of the last topology data base checkpoint and is expressed in the 24-hour system. For example, 1:00 p.m. is displayed as **13:00:00**.

adj is the number of nodes adjacent to the node issuing the command.

nn is the total number of network nodes known to the network.

en is the total number of end nodes with a direct APPN connection to this node.

served_en is the number of adjacent end nodes served by the node issuing the command.

cdrserv is the total number of directory servers known to the network.

icn is the total number of interchange nodes known to the network.

bn is the total number of border nodes known to the network.

IST1781I

This message is the header for information displayed in message IST1785I.

IST1785I

initdb_date and *initdb_time* are the creation date and time of the topology checkpoint data set that was successfully loaded when VTAM was started with start option INITDB=TOPO or INITDB=ALL.

garbage_collect_date and *garbage_collect_time* are the date and time of the last topology data base garbage collection.

The format of *initdb_date* and *garbage_collect_date* is based on the DATEFORM start option and can be one of the following:

DATEFORM|DATEFRM=DMY
date is **DD/MM/YY**.

DATEFORM|DATEFRM=MDY (default)
date is **MM/DD/YY**.

DATEFORM|DATEFRM=YMD
date is **YY/MM/DD**.

The format of *initdb_time* and *garbage_collect_time* is hh:mm:ss and it is expressed in the 24-hour system. For example, 1:00 p.m. is displayed as 13:00:00.

System Action: Processing continues.

Operator Response: None.

Programmer Response: None.

IST1307I *date time adj nn en served_en dirsrv icn bn*

Explanation: VTAM issues this message as part of a group of messages in response to a DISPLAY,TOPO,LIST=SUMMARY command. See message IST1306I for a complete description of the group.

IST1308I RESOURCE WAS NOT FOUND IN THE TOPOLOGY DATABASE

Explanation: VTAM issues this message as part of a group of messages when the resource specified or implied (NODE or TG) on the command cannot be found in the topology database.

If this message is the result of a MODIFY TOPO command, then the first message is IST1158. See the explanation of that message for a complete explanation.

If this message is the result of a DISPLAY TOPO command, a complete description of the message group follows:

```
 IST350I   DISPLAY TYPE = TOPOLOGY
[IST1348I  VTAM STARTED AS nodetype]
[IST1805I ONLY LOCAL TOPOLOGY INFORMATION IS AVAILABLE]
[IST1299I  TRANSMISSION GROUPS ORIGINATING AT CP cpname]
 IST1308I  RESOURCE WAS NOT FOUND IN THE TOPOLOGY DATABASE
 IST314I   END
```

IST1299I

Message IST1299I is issued for the following commands:
– DISPLAY,TOPO,ORIG=*cpname*,DEST=*cpname*
– DISPLAY,TOPO,ORIG=*cpname*,TGN=*tgn*

Note: If the origin *cpname* is not valid, message IST1299I is not issued.

cpname is the name of the resource specified on the ORIG operand of the command. If a network-qualified name was entered on the command, VTAM issues *cpname* in the form *netid.name*.

IST1308I

This message is issued when *nodename* or *tgnumber* cannot be found in the topology database.

IST1348I

Message IST1348I is issued for the following commands entered from an end node or a migration data host:
– DISPLAY,TOPO,LIST=NN|EN|BN|ICN|VN|CDSERVR
– DISPLAY,TOPO,LIST=SUMMARY

nodetype indicates the node type of this host and is determined by start options that are specified. Possible values include:
– END NODE
– MIGRATION DATA HOST

IST1805I

This message is displayed when a DISPLAY TOPO command is issued at an end node and the requested information is not available.

System Action: Processing continues.

Operator Response: Ensure that you entered the command correctly.

Programmer Response: None.

IST1309I START OPTION CURRENT VALUE ORIGINAL VALUE ORIGIN

Explanation: VTAM issues this message as part of a group of messages in response to a DISPLAY VTAMOPTS command. The first message in the group is IST1188I. See the explanation of that message for a complete description.

IST1310I *option current_value original_value origin*

Explanation: VTAM issues this message as part of a group of messages in response to a DISPLAY VTAMOPTS command. The first message in the group is IST1188I. See the explanation of that message for a complete description.

IST1311A ENTER START OPTION OVERRIDES OR ENTER HALT TO EXIT VTAM

Explanation: VTAM issues this message in response to the following situations during start processing:

- VTAM encountered an error during processing of VTAM start options.
- The operator asked for additional prompting in response to message IST051A.

System Action: VTAM waits for a reply to this message.

- If the LIST start option is entered, VTAM ignores it.
- If HALT is entered, start processing ends and VTAM is terminated.

Operator Response:

- Enter start options to override current values, or enter a blank to indicate that you want default values. If you need another prompt for further overrides, follow the last option with a comma.
- Enter HALT to terminate VTAM.

Programmer Response: None

IST1312I NO START OPTIONS HAVE BEEN MODIFIED

Explanation: VTAM issues this message in response to a DISPLAY VTAMOPTS command when FORMAT=MODIFIED was specified and no start options have been modified since VTAM start.

System Action: Processing continues.

Operator Response: None.

Programmer Response: None.

IST1313I NO TRACES ACTIVE FOR *resourcename*

Explanation: VTAM issues this message as part of a group of messages in response to a DISPLAY TRACES command when there are no active traces for *resourcename*.

resourcename is the name of the resource specified on the ID operand of the command.

System Action: Processing continues.

Operator Response: None.

Programmer Response: None.

IST1314I TRLE = *trl_element* **STATUS =** *trle_status* **CONTROL =** *lnctl*

Explanation: VTAM issues this message as part of a message group in response to any of the following commands:

- A DISPLAY ID command for a PU that supports an APPN host-to-host connection.
- A DISPLAY ID command for a PU that supports an XCF connection.
- A DISPLAY TRL command when the TRLE operand is not specified.

  trl_element is the name of an element in the active transport resource list.

trle_status is the current status of the TRL element. If *trle_status* is ******NA******, then the TRL major node with the TRLE named on the PU definition must be activated. See the *z/OS Communications Server: SNA Migration* for more information on values for *trle_status*.

lnctl can be one of the following:

MPC
: multipath channel

TCP
: transmission control protocol

XCF
: cross-system coupling facility

System Action: Processing continues.

Operator Response: None.

Programmer Response: None.

IST1315I DISPLAY TRUNCATED AT *keyword* **=** *number*

Explanation: This message is part of several different message groups that VTAM issues in response to a DISPLAY command.

VTAM issues this message when the number of resources to be displayed exceeds the value specified for the MAX or NUM operand.

keyword is either MAX or NUM.

number is the value specified for the MAX or NUM operand.

This message can be issued for any of the following commands:

- DISPLAY ADJSSCPS
- DISPLAY APPLS
- DISPLAY CDRMS
- DISPLAY CDRSCS
- DISPLAY CLSTRS
- DISPLAY CPCP
- DISPLAY DIRECTRY,ID=*.name
- DISPLAY EXIT
- DISPLAY GROUPS
- DISPLAY GRAFFIN
- DISPLAY LINES
- DISPLAY LUGROUPS,SCOPE=ALL
- DISPLAY MAJNODES
- DISPLAY PATHTAB
- DISPLAY PENDING
- DISPLAY RSCLIST
- DISPLAY SRCHINFO
- DISPLAY SESSIONS,LIST=ALL
- DISPLAY STATIONS
- DISPLAY STATS,TYPE=CFS
- DISPLAY STATS,TYPE=VTAM
- DISPLAY STORUSE
- DISPLAY TABLE,SCOPE=ALL
- DISPLAY TERMS
- DISPLAY TGPS
- DISPLAY TRL
- DISPLAY USERVAR.

IST1316I PU NAME = *puname* **STATUS =** *status***TRLE =** *trl_element*

Explanation: VTAM displays this message as part of a message group in response to a DISPLAY ID, SCOPE=ALL command for a local SNA major node which contains at least one PU that supports APPN host-to-host connections.

puname is the name of a PU that supports an APPN host-to-host connection.

status is the status of the PU. See the *z/OS Communications Server: SNA Migration* for status information.

trl_element is the name of an element in the active transport resource list (TRL). It identifies which element defining a multipath channel (MPC) group will be used as the supporting data link control (DLC) for this APPN host-to-host connection.

System Action: Processing continues.

Operator Response: None.

Programmer Response: None.

IST1317I DLCADDR SUBFIELDS FOR PID: *pid* **[***instance***]**

Explanation: This message is the first in a subgroup of messages that VTAM issues in response to the DISPLAY PATHS command.

This message subgroup is displayed in a message group headed by IST148I. A complete description of the message subgroup follows.

```
 IST1317I DLCADDR SUBFIELDS FOR PID: pid [instance]
 IST1318I   parameter_value
[IST1319I      parameter_value]
⋮
[IST1318I   parameter_value]
[IST1319I      parameter_value]
⋮
```

IST1317I

pid is the path identifier that was specified on the PATH definition statement.

instance indicates that *parameter_value* in the group of IST1318I messages that follow correspond to the *instance* instance of the message IST168I with a *pid* of **000**. You must count the group of IST168I messages to find the *instance* instance of message IST168I with a *pid* of **000**. *instance* is only displayed when *pid* is **000**.

IST1318I

parameter_value is the DLCADDR value specified in the PATH definition statement. The message will appear as follows:

```
IST1318I yy,N'parameter value'
```

N is the value specified on the DLCADDR keyword.

yy is the subfield ID.

If the DLCADDR value was coded in hexadecimal or binary coded decimal (BCD), *parameter_value* is displayed with a blank separating every 8 characters of data. If an odd number of digits was coded for the DLCADDR value, *parameter_value* will be padded on the left with a 0.

IST1319I

This message is used to display overflow information from *parameter_value* in IST1318I.

System Action: Processing continues

Operator Response: None.

Programmer Response: None.

IST1318I *parameter_value*

Explanation: VTAM issues this message as part of a message group. The first message in the group is either IST149I, IST1317I, or IST1351I. See the explanation of those messages for a complete description of the message group.

IST1319I *parameter_value*

Explanation: VTAM issues this message as part of a message group. The first message in the group is either IST149I, IST1317I, or IST1351I. See the explanation of those messages for a complete description of the message group.

IST1320I *command* **IS ONLY VALID AT** *type*

Explanation: VTAM issues this message when *command* is not valid for the node.

command can be one of the following:
- **D ADJCLUST**
- **D APPNTOSA**
- **D BNCOSMAP**
- **D SAMAP**
- **D SATOAPPN**

type can be one of the following:
- **APPN NODE**
- **BORDER NODES**
- **NN**

System Action: Processing continues.

Operator Response: Save the system log for problem determination.

Programmer Response: To enter *command* from this node, define the node as a border node, an APPN node or a network node.

IST1321I **TABLE FOR** *tabletype* **[***netid***]**

Explanation: This message is part of a group of messages that VTAM issues in response to a DISPLAY BNCOSMAP, APPNTOSA, SATOAPPN, or SNSFILTR command. Possible message groups follow.

- If the display type is **BNCOSMAP**, the following message group is displayed.

```
IST350I   DISPLAY TYPE = BNCOSMAP
IST1321I  TABLE FOR BNCOSMAP netid
IST1322I  NON-NATIVE     NATIVE
IST1323I  non-native     native
:
IST314I   END
```

- If the display type is **APPNTOSA**, the following message group is displayed.

```
IST350I   DISPLAY TYPE = APPNTOSA
IST1321I  TABLE FOR APPNTOSA
IST1431I  APPN COS       SUBAREA COS
IST1323I  appn_cos       subarea_cos      [DEFAULT]
:
IST314I   END
```

- If the display type is **SATOAPPN**, the following message group is displayed.

```
IST350I   DISPLAY TYPE = SATOAPPN
IST1321I  TABLE FOR SATOAPPN
IST1514I  SUBAREA COS     APPNCOS
IST1323I  appn_cos       subarea_cos      [DEFAULT]
:
IST314I   END
```

- If the display type is **SNSFILTR**, the following message group is displayed.

```
IST350I   DISPLAY TYPE = SNSFILTR
IST1321I  TABLE FOR SAW SENSE FILTER
IST1551I  sense_1 sense_2 sense_3 sense_4 sense_5
:
IST314I   END
```

- If the display type is **SAMAP**, the following message group is displayed.

```
IST350I   DISPLAY TYPE = SAMAP
IST1321I  TABLE FOR SAMAP
IST1671I  subarea_number MAPSTO subarea_number
:
:
IST314I   END
```

IST350I

This message identifies the type of information shown in the display.

type in this message group is either **BNCOSMAP**, **APPNTOSA**, **SATOAPPN**, **SNSFILTR**, or **SAMAP**. The display contains information about the specified user-defined tables that are active in VTAM.

IST1321I

tabletype is either **BNCOSMAP**, **APPNTOSA**, **SATOAPPN**, **SAW SENSE FILTER**, or **SAMAP**.

netid is displayed when *tabletype* is **BNCOSMAP** and represents the network ID that corresponds to the COS mappings.

– *netid* is the name of the network that was specified on the NETWORK definition statement.

– **DEFAULT_NETID** is displayed if no specific value for *netid* has been defined.

IST1322I, IST1431I, IST1514I

This message is a header for the information displayed in message IST1323I.

IST1323I

- If *tabletype* in message IST1321I is **BNCOSMAP**, this message shows the corresponding nonnative and native COS names.

  nonnative is the name of the COS that is defined within an adjacent nonnative subnetwork.

  native is the COS name to which the nonnative COS will map in the topology subnetwork of the issuing node.

- If *tabletype* in message IST1321I is **APPNTOSA**, this message shows the corresponding APPN and subarea COS mappings.

  appn_cos is the COS name that is used for routing through the APPN network.

  subarea_cos is the COS name that is used for routing through the subarea network.

DEFAULT is displayed if COSDEF=YES is specified on the MAPSTO entry of the VBUILD definition statement.

IST1431I

This message is a header for the information displayed in message IST1323I.

IST1514I

This message is issued in response to a DISPLAY SATOAPPN command.

IST1551I

sense is a user-specified sense code, used by VTAM to filter session awareness data concerning session setup failures for a CNM application.

IST1671I

subarea_number is the subarea number coded in the SAMAP table. The two subarea numbers represent the two subarea components within the composite network node (CNN) that are connected to each other.

System Action: Processing continues.

Operator Response: None.

Programmer Response: None.

IST1322I NON-NATIVE NATIVE

Explanation: VTAM issues this message as part of a group of messages in response to a DISPLAY COSMAP command. See the explanation of message IST1321I for a complete description of the message group.

IST1323I *non-native native*

Explanation: VTAM issues this message as part of a group of messages in response to a DISPLAY COSMAP command. See the explanation of IST1321I for a complete description of the message group.

IST1324I VNNAME = *vnname* **VNGROUP =** *vngroup vntype*

Explanation: VTAM issues this message as part of a group of messages in response to a DISPLAY ID command when one of the following resources was specified on the ID operand of the command:
- Name of a line definition statement for a NCP major node
- Name of a port definition statement for a XCA major node.

vnname is the fully qualified virtual routing node name.

vngroup is the GROUP associated with the connection network definition. If *vngroup* is not coded when *vntype* is GLOBAL, then the value in *vngroup* will be a string of periods.

vntype indicates the type of HPR/IP (Enterprise Extender) connection network. The two possible values are:

(LOCAL)
The connection network is being defined as a LOCAL Virtual Routing Node (the connection network cannot traverse network or subnetwork boundaries.) Either VNTYPE was not specified, or VNTYPE was specified as LOCAL on the definition of the HPR/IP (Enterprise Extender) virtual node.

(GLOBAL)
The connection network is being defined as a GLOBAL Virtual Routing Node (the connection network can traverse network or subnetwork boundaries.) VNTYPE was specifies as GLOBAL on the definition of the HPR/IP (Enterprise Extender) virtual node.

System Action: Processing continues.

Operator Response: None.

Programmer Response: None.

IST1325I *table* **TABLE FOR** *netid* **– DYNAMICS =** *dynamics*

Explanation: VTAM issues this message as part of a group of messages in response to a DISPLAY ADJCLUST command. A complete description of the message group follows:

```
IST350I    DISPLAY TYPE = ADJACENT CLUSTER TABLE
IST1325I   table TABLE FOR netid - DYNAMICS = dynamics
IST1326I   CP NAME         TYPE    STATE   STATUS      SNVC
IST1327I   cpname          type    state   status      snvc
:
IST314I    END
```

The IST1325I subgroup is repeated for each target network.

IST350I

This message identifies the type of information shown in the display. DISPLAY TYPE is always **ADJACENT CLUSTER TABLE** for this message group.

IST1325I

table is the type of table being displayed. Values for *table* depend upon the extent to which the user has defined entries for the adjacent cluster table. Possible values are:

DEFINED
The user has defined entries for the specified NETID in the adjacent cluster table.

DEFAULT
The user has not defined any entries for the displayed NETID, but a DEFAULT_NETID entry has been defined.

DYNAMIC
The user has not defined any entries for the displayed NETID, no default table has been coded, but dynamics are allowed (SSCPDYN=YES).

netid is the network identifier of the network that the search is targetting. The default is **DEFAULT_NETID**. VTAM uses **DEFAULT_NETID** if the NETID operand is omitted from the network definition statement. Refer to the *z/OS Communications Server: SNA Resource Definition Reference* for more information about the network definition statement.

dynamics shows the level of dynamic support used in determining the routing list. Possible values are:

NONE Is used to display only those CP names that were explicitly defined within the adjacent cluster table by the NEXTCP definition statement.

FULL Is used to allow the display of all active border nodes in the native APPN topology subnetwork as well as adjacent nonnative border nodes and network nodes.

LIMITED
Is used to display all active border nodes in the native APPN topology subnetwork as well as active adjacent nonnative border nodes and network nodes that meet the following criteria :

– The NETID of the resource and the BN or NN match

– A previous search from this BN or NN was successful in finding a resource with this NETID.

An APPN topology subnetwork is a collection of nodes that share the same topology database.

IST1326I and **IST1327I**

The following messages provide status information about the border nodes that can be used to reach the target network.

cpname is the network-qualified name of the border node and is in the form *netid.name*.

type is the type of CP being displayed. Possible values are **DEFINED or DYNAMIC**.

- If *table* in message IST1325I is **DEFINED** or **DEFAULT**, then table entries will have *type* of **DEFINED** or **DYNAMIC**.
- If *table* is **DYNAMIC**, then *type* will be only **DYNAMIC**.

state is the current state of the border node and is either **ACTIVE** or **NOT ACTIVE**.

status shows the result of the most recent search for this particular border node. Possible values are **FOUND**, **NOT FOUND**, or **NOT SEARCHED**.

snvc is the APPN topology subnetwork visit count. It indicates the maximum number of intersubnetwork links that can be crossed while attempting to locate the target network. An APPN topology subnetwork is a collection of nodes that share the same topology database.

IST1327I is repeated for each border node that exists in the adjacent cluster table.

System Action: Processing continues.

Operator Response: None.

Programmer Response: None.

IST1326I CP NAME TYPE STATE STATUS SNVC

Explanation: This message is part of a group of messages that VTAM issues in response to a DISPLAY ADJCLUST command. The first message in the group is IST1325I. See the explanation of that message for a complete description.

IST1327I *cpname type state status snvc*

Explanation: This message is part of a group of messages that VTAM issues in response to a DISPLAY ADJCLUST command. The first message in the group is IST1325I. See the explanation of that message for a complete description.

IST1328I TRLE *trl_element* **NOT FOUND IN TRL**

Explanation: VTAM issues this message in response to the DISPLAY TRL command when the TRLE requested is not found in the active transport resource list (TRL). VTAM also issues this message in response to the MODIFY TNSTAT command when the TRLE requested is not found in the active transport resource list (TRL).

trl_element is the name of the transport resource list element.

System Action: Processing continues

Operator Response: Save the system log for problem determination.

After a TRLE statement is added to the VTAMLST member containing the TRL, issue a VARY ACT command for that TRL, specifying UPDATE = ALL.

Programmer Response: You must add a TRLE statement to the TRL major node definition.

IST1329I *command resource* **FAILED – VIRTUAL NODE NOT DEFINED**

Explanation: VTAM issues this message in response to a MODIFY TGP command when a virtual node has not been defined for *resource*.

command is always **MODIFY TGP**.

resource is one of the following:

- The resource name that is specified on the ID operand of *command*
- The resource identified by the adjacent control point that is coded on the ID operand and the transmission group number that is coded on the TGN operand of *command*.

System Action: Processing continues.

Operator Response: Ensure that you entered *resource* correctly.

If VTAM continues to issue this message, save the system log for problem determination, and print the major node definition for *resource*.

Programmer Response: Verify that *resource* has defined the virtual node by coding VNNAME and VNGROUP on:
- Port definition statement for an XCA major node
- Line or group definition statement for an NCP major node.

See to the *z/OS Communications Server: SNA Resource Definition Reference* for more information about these definition statements.

IST1330I *type* **CANNOT BE ACTIVATED FROM** *nodetype*

Explanation: VTAM issues this message in response to a VARY ACT command when *type* cannot be activated from this *nodetype*.

type can be one of the following:

APPNCOS
: APPN class of service

ADJCP
: Adjacent control point

ADJSSCP
: Adjacent system services control point

CDRM
: Cross domain resource manager

NCP
: Network Control Program

NETSRVR
: Network node server list

PATH
: Path definition statement

PUTYPE4
: Physical unit type 4

PUTYPE5
Physical unit type 5

TGP
Transmission group profile

nodetype represents the type of node from which the command was issued, and can be one of the following:

APPN NODE
The node is an APPN network node or APPN end node.

EN The node is an APPN end node.

MDH
The node is a migration data host and acts as both an APPN end node and a subarea node.

NN
The node is an APPN network node.

SUBAREA NODE
The node is a subarea node. It uses network addresses for routing and maintains routing tables that reflect the configuration of a network.

Message IST072I or IST1264I follows this message and displays the name of the resource that was specified on the ID operand of the VARY ACT command.

System Action: Processing continues.

Operator Response: Ensure that you entered the command correctly. If problems persist, save the system log for problem determination.

Programmer Response: Check your network configuration to determine which value (*type* or *nodetype*) is not correct.

IST1331I *resource* **IS INACTIVE**

Explanation: VTAM issues this message in response to a MODIFY VTAMOPTS,OSIMGMT=NO command when the command is completed successfully.

resource is always **CMIP SERVICES**.

System Action: Processing continues.

Operator Response: If you wish to restart CMIP services, issue MODIFY VTAMOPTS,OSIMGMT=YES.

Programmer Response: None.

IST1332I **CMIP SERVICES LOAD FAILED FOR** *module* **IN** *library*

Explanation: VTAM issues this message when VTAM is unable to load the *module* from the *library* library. This module is needed for CMIP services to be active.

System Action: Processing continues. VTAM CMIP services is inactive.

Operator Response: Collect the system log for problem determination.

Programmer Response: This problem is most likely a LINKEDIT failure. Ensure that the load module *module* resides in the *library* library.

IST1333I **ADJLIST=** *listname*

Explanation: This message is part of several groups of messages that VTAM issues in response to a DISPLAY ID command for a CDRSC when SCOPE=ALL and to a DISPLAY ADJSSCPS, ADJLIST= *|*listname* command.

- If the first message is IST977I, IST831I, or IST611I, see the explanations of those messages for a complete description of the message group.
- If the first message is IST350I, a complete description of the message group follows:

```
IST350I  DISPLAY TYPE = ADJACENT SSCP TABLE
IST1333I ADJLIST = listname
IST624I  sscpname
:
:
IST314I  END
```

This message group is issued when an ADJLIST and an ADJSSCP were specified on the command.

IST350I

This message identifies the type of information shown in the display. DISPLAY TYPE is always **ADJACENT SSCP TABLE** for this message group.

IST624I

VTAM issues this message for each SSCP *sscpname* in the adjacent SSCP table being displayed.

IST1333I

This message is displayed for each ADJLIST defined and activated. It will be followed by an IST624I message for each member in the adjacent SSCP list.

An ADJLIST definition statement must be active for this message to be displayed. *listname* is the name of an adjacent SSCP table as defined by an ADJLIST definition statement.

If an adjacent SSCP table was not specified for the CDRSC,

See the descriptions of the ADJLIST definition statement in the *z/OS Communications Server: SNA Resource Definition Reference* for more information on adjacent SSCP tables.

System Action: Processing continues.

Operator Response: None.

Programmer Response: None.

IST1334I TGN NOT AVAILABLE

Explanation: This message is part of a group messages that VTAM issues in response to a VARY ACT for a line when the activation of the logical connection to the virtual node fails. The first message in the group is IST1166I. See the explanation of that message for a complete description.

IST1335I *statementname* **HAS NO ADJCDRM STATEMENT FOR ADJLIST** *listname*

Explanation:

This message is the first in a group of messages that VTAM issues during configuration when the VBUILD TYPE=ADJSSCP definition has one or more null ADJLIST lists. The null ADJLIST lists are ignored. A full description of the message group follows.

```
IST1335I statementname HAS NO ADJCDRM STATEMENT FOR ADJLIST listname
IST833I  SKIPPING TO NEXT CDRM, NETWORK, OR ADJLIST STMT OR EOF
IST314I  END
```

statementname is the ADJSSCP statement. *listname* is the name of the adjacent SSCP table as defined by an ADJLIST definition statement.

System Action: Processing continues.

Operator Response: Save the system log and notify the system programmer.

Programmer Response: Correct the null ADJLIST situation by doing one of the following:

- If the ADJLIST list is not needed, remove it from the definition.
- If the ADJLIST list is needed, add one or more ADJCDRM statements following the ADJLIST statements.

IST1336I *puname* **ACTIVATION FAILED – CONFLICTING** *operand* **VALUES**

Explanation: VTAM issues this message when a PU definition contains the NATIVE operand and the value conflicts with the value on the ADJCP definition.

puname is the name of the PU for which the activation failed.

operand is **NATIVE**.

System Action: Processing continues.

Operator Response: Save the system log for problem determination.

Programmer Response: Make sure that the values of the operand are the same on the ADJCP and PU definitions.

IST1337I *operand* **ON** *labelname* **IGNORED – ONLY VALID FOR BN**

Explanation: VTAM issues this message when the NATIVE operand was specified on a GROUP, LINE, PU, or ADJCP definition statement but this node is not a border node. The operand is ignored.

operand is always **NATIVE**.

labelname is the label of the definition statement specifying the operand.

System Action: Processing continues.

Operator Response: Save the system log for problem determination.

Programmer Response: Remove the NATIVE operand if this node is not suppose to be a border node. Otherwise the node must be brought down and then brought back up as a border node.

IST1338I *operand* **VALUE ON** *resourcename* **IGNORED- VALUES CONFLICT**

Explanation: VTAM issues this message when an ADJCP definition contains the NATIVE or NN operand and the value conflicts with the value in the existing ADJCP definition. The NATIVE/NN value specified is ignored in favor of the existing value.

operand is **NATIVE** or **NN**.

resourcename is the network-qualified name on the ADJCP statement in error. *resourcename* is in the form *netid.label*.

System Action: Processing continues.

Operator Response: Save the system log for problem determination.

Programmer Response: Correct the value specified for NATIVE or NODETYPE in the dynamic ADJCP definition.

IST1340I **TAKEOVER OF** *pu_name* **FAILED – NCP IS** *level*

Explanation: This message is part of a group of messages that VTAM issues when an attempt was made to perform an SSCP takeover on a *level* NCP. NCPs that are *level* do not support the SSCP takeover function. VTAM will perform a DACTLINK(GIVEBACK) in an attempt to restore the system as it was prior to the SSCP takeover failure. However, there is no guarantee that this will be completely successful.

A complete description of the message group follows:

```
IST1340I  TAKEOVER OF pu_name FAILED- NCP IS level
IST1341I  BEGINNING DACTLINK(GIVEBACK) FOR line_name
IST314I   END
```

IST1340I

This message identifies that an error has occurred during SSCP takeover. It contains information about the *pu_name* in error.

pu_name is the name of the PU which is being taken over.

level is the version, release, and modification (if applicable) of NCP that is being run. It is always **PRE-V6R3**, indicating NCP Version 6 Release 3.

IST1341I

This message shows the action that is being taken.

line_name is the name of the line being deactivated.

System Action: VTAM performs a DACTLINK(GIVEBACK) in an attempt to restore the system as it was before the SSCP takeover failure. However, there is no guarantee that this will be completely successful.

Operator Response: None.

Programmer Response: None.

IST1341I BEGINNING DACTLINK(GIVEBACK) FOR *linename*

Explanation: This message is part of a group of messages that VTAM issues when an attempt was made to perform an SSCP takeover on a *level* NCP. NCPs that are *level* do not support the SSCP takeover function. The first message in the group is IST1340I. See the explanation of that message for a complete description.

IST1342I DNSUFX = *dnsufx*

Explanation: This message is part of a group of messages which VTAM issues when a DISPLAY ID command is entered for a TCP/IP major node. A complete description of the message group follows.

```
 IST075I  NAME = nodename, TYPE = TCP/IP MAJOR NODE
 IST486I  STATUS= currentstatus, DESIRED STATE= desiredstate
 IST1342I DNSUFX = dnsufx
[IST1343I dnsufx_continuation]
 IST1692I TCB = taskno  TCP PORT = portno
 IST1400I DGTIMER  = dgtimer   EXTIMER = extimer
 IST1406I CONTIMER = contimer  IATIMER = iatimer
 IST654I  I/O TRACE = {ON|OFF}, BUFFER TRACE = {ON|OFF} [— AMOUNT = value]
 IST170I  LINES:
 IST232I  linename, status,[CUA = device address]
 IST314I  END
```

IST075I

nodename is the name of the resource that was entered on the DISPLAY ID command.

Type is always **TCP/IP MAJOR NODE** for this display.

IST232I

linename is the name of a leased line defined for a type 5 physical unit, a switched line defined for a type 2 physical unit, or a VCNS line.

status is the condition or state of the channel-to-channel adapter or the token-ring sub-system.

device address is the hexadecimal channel unit address of *linename*. *device address* is only displayed for a communication adapter.

IST486I

currentstatus is the current status of the node.

desiredstate is the node state that is desired. If VTAM cannot determine the desired state, *desiredstate*

IST654I

AMOUNT = *value* is displayed if **BUFFER TRACE = ON**. *value* represents the **AMOUNT** operand value specified on the TRACE start option or the MODIFY TRACE command, and indicates how much of the buffer's contents are traceable. *value* can be one of the following:

PARTIAL
The trace record has a maximum size of 256 bytes including header information.

FULL
All of the buffer's contents are traceable.

Note: If **AMOUNT** is not specified when the buffer contents trace is activated, the default *value* **PARTIAL** is displayed.

See the *z/OS Communications Server: SNA Diagnosis Vol 1, Techniques and Procedures* for more information.

IST1342I

dnsufx is the domain name suffix which is the 1 to 237 character value specified on the DNSUFX operand of the VBUILD definition statement.

IST1343I

This message is used to display overflow information from *dnsufx* in IST1342I. *dnsufx_continuation* is repeated until the complete domain name suffix is displayed.

IST1400I

dgtimer is the value of the DGTIMER operand specified in the VBUILD definition statement. The value ranges from 1 to 65535 seconds.

extimer is the value of the EXTIMER operand specified in the VBUILD definition statement. The value ranges from 1 to 65535 seconds.

See *z/OS Communications Server: AnyNet SNA over TCP/IP* for information regarding the DGTIMER and EXTIMER operands on the VBUILD statement.

IST1406I

contimer is the value of the CONTIMER operand specified in the VBUILD definition statement. The value ranges from 1 to 65535 seconds.

iatimer is the value of the IATIMER operand specified in the VBUILD definition statement. The value ranges from 1 to 65535 seconds.

See *z/OS Communications Server: AnyNet SNA over TCP/IP* for information regarding the CONTIMER and IATIMER operands on the VBUILD statement.

IST1692I

taskno is the number of MVS tasks specified on the TCB operand of the VBUILD definition statement.

portno is the TCP port number specified on the PORT operand of the VBUILD definition statement.

System Action: Processing continues.

Operator Response: None.

Programmer Response: None.

IST1343I *dnsufx_continuation*

Explanation: VTAM issues this message as part of a group of messages. The first message in the group is IST1342I. See the explanation of that message for a complete description.

IST1345I ID VALUE DESCRIPTION

Explanation: VTAM issues this message as part of a group of messages in response to a DISPLAY STATS,TYPE=VTAM command.

Notes:

1. The information in this display may be used to calculate storage requirements for VTAM. See the *z/OS Communications Server: SNA Migration* for information about storage requirements for VTAM.
2. For a description of the DISPLAY STATS command, see the *z/OS Communications Server: SNA Operation*.

A complete description of the message group follows:

```
 IST350I  DISPLAY TYPE = STATS,TYPE=VTAM
 IST1349I COMPONENT ID IS dddd-ddddd-ddd
 IST1345I    ID VALUE        DESCRIPTION
 IST1227I ddddd value      = description
⋮
[IST1315I DISPLAY TRUNCATED AT keyword = number]
 IST1454I count STATISTICS DISPLAYED
 IST314I  END
```

IST350I

IST1345I

This message identifies the type of information in the display and is always **STATS,TYPE=VTAM** for this message group.

IST1227I

ddddd is a storage estimates function ID number assigned by VTAM. It can be up to five digits in length and is displayed without leading zeros.

Possible function ID numbers and their descriptions follow:

2 *value* **= VIT TABLE SIZE**
value represents the number of 4K pages allocated for the VTAM internal trace table.

5 *value* **= CHANNEL-ATTACHED CONTROLLERS**
value represents the number of channel-attached communication controllers that are defined to and owned by this VTAM. *value* includes one resource internally defined by VTAM.

6 *value* **= MAXBFRU FOR CHANNEL-ATTACHED CONTROLLERS**
value represents the sum of the values coded for the MAXBFRU operands for all channel-attached communication controllers defined to this VTAM.

7 *value* **= INTERCONNECT CONTROLLERS FOR** *majornode*
value represents the number of IBM 3172 Interconnect Controllers defined in this VTAM for *majornode*.

8 *value* **= XCA MAJOR NODES** *majornode*
value represents the number of external communication adapters defined in this VTAM with VBUILD, TYPE=XCA definition statements.

9 *value* **= 3172 CONNECTIONS FOR** *majornode*
value represents the number of unique CUADDR operands specified on the PORT definition statements for external communication adapter (XCA) *majornode*.

10 *value* **= TOTAL LINE STATEMENTS FOR XCA MAJOR NODES**
value represents the number of LINE statements for all external communication adapter (XCA) major nodes.

11 *value* **= CHANNEL-TO-CHANNEL ATTACHMENTS**
value represents the number of channel-to-channel (CTC) lines that are defined to VTAM with VBUILD,TYPE=CA definition statements and GROUP definition statements that specify LNCTL=CTCA. Multipath channel attached resources are included under **ID 120**.

12 *value* **= TOTAL MAXBFRU FOR CTC ATTACHMENTS**
value represents the sum of the values coded for all MAXBFRU operands for channel-to-channel (CTC) attachments defined in this VTAM.

13 *value* **= CTC TOTAL MAXBFRU CROSS DOMAIN**
value represents the sum of the values coded for all MAXBFRU operands for channel-to-channel (CTC) attachments to this VTAM but defined in other VTAMs.

14 *value* **= CA CLUSTER CONTROLLER TOTAL**
value represents the number of cluster controllers that are channel attached to this VTAM.

15 *value* **= SNA PU TOTAL MAXBFRU**
value is the sum of the values coded for all MAXBFRU operands for channel attached SNA PUs activated from this VTAM.

16 *value* **= LOCAL NON-SNA TERMINALS**
value represents the number of local non-SNA terminals that are defined on LOCAL definition statements that are part of local non-SNA major nodes.

17 *value* **= NETVIEW PIU TRACE BUFFER SIZE**
value represents the size of the NetView PIU trace buffers.

18 *value* **= NETVIEW PIU TRACE BUFFERS**
value represents the number of NetView PIU trace buffers.

19 *value* **= NETVIEW SAW BUFFER SIZE**
value represents the size of all NetView session awareness (SAW) buffers.

20 *value* **= NETVIEW SAW BUFFERS**
value represents the number of NetView session awareness (SAW) buffers.

21 *value* **= ICA DEVICES**
value represents the number of integrated communication-adapter (ICA) devices.

22 *value* **= DESTINATION SUBAREAS**
value represents the number of unique type 4 and 5 nodes with which this VTAM will communicate. *value* always includes one resource internally defined by VTAM.

45 *value* **= DEPENDENT LU TOTAL FOR** *majornode*
value represents the total number of dependent LUs defined under *majornode* with VBUILD, TYPE=LOCAL coded.

46 *value* **= INDEPENDENT LU TOTAL**
value represents the total number of independent LUs for which VTAM will provide boundary function services.

47 *value* **= MAXIMUM SUBAREA**
value represents the maximum subarea number allowed in this SSCP.

48 *value* **= DEFINED PU TOTAL**
value represents the total number of PUs that are defined in this VTAM.

49 *value* **= ACTIVE PU TOTAL**
value represents the total number of PUs that are active in VTAM.

50 *value* **= DEFINED LU TOTAL**
value represents the number of device type LUs defined in this VTAM.

51 *value* **= ACTIVE LU TOTAL**
value represents the total number of LUs that are active in VTAM.

52 *value* **= ACTIVE DEPENDENT LU TOTAL**
value represents the total number of dependent LUs that are active under a VBUILD TYPE=LOCAL major node.

53 *value* **= LOCAL LU-LU SESSIONS**
value represents the number of sessions with one or both session partners defined to this VTAM under VBUILD,TYPE=LOCAL major nodes.

54 *value* **= PERSISTENT LU-LU SESSIONS**
value represents the number of sessions that exist with persistent LU-LU session-capable applications owned by this VTAM.

55 *value* **= LU TOTAL TSO SESSIONS**
value represents the number of sessions with a time-sharing option (TSO) application program running on this VTAM. This includes local, cross-domain, and cross-network resources.

56 *value* **= TOTAL APPL SESSIONS**
value represents the number of sessions with application programs running on this VTAM. This includes local, cross-domain, and cross-network resources.

57 *value* **= LU6.2 APPLICATIONS**
value represents LU 6.2 applications that will open an application control block (ACB) in this VTAM. If the node being displayed supports APPN, *value* always includes one resource internally defined for APPN.

58 *value* **= LU6.2 SESSIONS**
value represents LU 6.2 sessions with application LUs that are owned by this VTAM.

60 *value* **= ICSF ENCRYPTION SERVICES**
value represents the total number of LU-LU sessions as well as sessions between an application and another LU that will use ICSF encryption services. The ENCR operand on the APPL definition statement must be specified as REQD, COND, SEL, or OPT. The ENCR operand on the LU definition statement must be specified as REQD or OPT for encryption to be used.

61 *value* **= SNA DATA COMPRESSION SESSIONS**
value represents the number of sessions that will use SNA data compression functions.

63 *value* **= RECOVERABLE SESSIONS**
value represents the number of sessions to be recovered during a network failure. *value* includes all SSCP-LU and LU-LU sessions.

64 *value* **= CURRENT NUMBER OF SESSION PARTNERS**
value represents the total number of LUs, applications, and cross-domain resources that are currently in session.

65 *value* **= NUMBER OF LINES DEFINED**
value represents the number of lines defined on LINE statements that are owned by this VTAM. *value* includes all NCP lines owned by this SSCP as well as all lines defined under VTAM major nodes.

66 *value* **= SWNET STATEMENTS**
value represents the number of VBUILD statements for this VTAM that have TYPE=SWNET specified. *value* always includes one statement internally defined by VTAM.

67 *value* **= PU STATEMENTS UNDER SW LINES**
value represents the number of PU statements under all group statements that have DIAL=YES specified.

68 *value* **= MAXNO OPERAND**
value represents the sum of values coded for the MAXNO operand on all VBUILD TYPE=SWNET definition statements.

69 *value* **= MXGRP OPERAND**
value represents the sum of values coded for the MXGRP operand on all VBUILD TYPE=SWNET definition statements. VTAM adds 1 to *value* for each group statement in the major node.

70 *value* **= PATH STATEMENTS**
value represents all PATH definition statements under all PUs defined for switched major nodes.

71 *value* **= LU-APPL SESSIONS**
value represents the number of LUs owned by this VTAM in session with an application program owned by this VTAM (for example, a terminal logged on to CICS). *value* includes all dynamically defined LUs.

73 *value* **= SAME NETWORK MULTI-NODE LU SESSIONS**
value represents the number of non-LU 6.2 sessions in which one LU is owned by this VTAM and the other LU is owned by another node or VTAM in the same network.

74 *value* **= CROSS NETWORK APPL SESSIONS**
value represents the number of cross-network sessions between an application program in this VTAM and a resource owned by a VTAM in another network.

77 *value* **= SAME DOMAIN LU6.2 SESSIONS**
value represents LU 6.2 sessions in which both LUs are owned by this VTAM.

78 *value* **= SAME NETWORK MULTI-NODE LU6.2 SESSIONS**
value represents the number of LU 6.2 sessions in which one LU is owned by this VTAM and the other LU is owned by another node or VTAM in the same network.

79 *value* **= CROSS NETWORK LU6.2 SESSIONS**
value represents the number of LU 6.2 sessions in which one LU is owned by this VTAM and the other LU is owned by a VTAM in another network.

80 *value* **= NETWORK INDEPENDENT LU TOTAL**
value represents the number of independent LUs either locally, remotely or CDRSC defined. All independent LUs will be represented as CDRSCs by VTAM.

81 *value* **= DYNAMICALLY DEFINED LU TOTAL**
value represents the number of dependent LUs which will be dynamically defined to PUs which are capable of receiving PSIDs (for example, 3174) when they are powered on.

99 *value* **= VTAM CONFIGURATION .**
value represents the node type in the VTAM start parameters. If the node type has not been specified, *value* will be **SUBAREA**.

100 *value* **= DYNAMIC DIRECTORY ENTRIES**
value represents the number of different LUs and CPs this VTAM needs to locate or access for session establishment or network management. If this VTAM is a central directory server, *value* also includes all resources that have been centrally registered with this VTAM.

101 *value* **= CENTRAL DIRECTORY SERVER SUPPORT**
value represents the value specified for CDSERVR in the VTAM start parameters.

– If *value* represents **CDSERVR=YES**, this VTAM is a central directory server for the network.

– If *value* represents **CDSERVR=NO**, this VTAM is not a central directory server for the network.

102 *value* **= REGISTERED DIRECTORY ENTRIES**
value represents the number of different destination LUs and CPs of other nodes that are registered to this VTAM. If VTAM supports APPN, *value* always includes one resource internally defined for APPN.

103 *value* **= SYSTEM DEFINED DIRECTORY ENTRIES**
value represents the number of different destination LUs and CPs that are system defined in the VTAMLIST for this VTAM.

104 *value* **= ADJACENT END NODES**
value represents the number of end nodes that have established CP-CP sessions with this VTAM.

106 *value* **= CENTRAL DIRECTORY SERVER**
value represents the number of central directory servers which exist in this network.

107 *value* **= ADJACENT NETWORK NODES**
value represents the number of network nodes which have established CP-CP sessions with this VTAM.

108 *value* **= APPN CLASS OF SERVICE**
value represents the total number of APPN classes of service defined in this VTAM.

109 *value* **= NETWORK NODES IN THE NETWORK**
value represents the total number of network nodes known to this VTAM.

111 *value* **= CONNECTION NETWORKS**
value represents the total number of connection networks (virtual nodes) known to this VTAM.

112 *value* **= SAME NETWORK MULTI-NODE APPL SESSIONS**
value represents the number of non-LU 6.2 sessions between application programs in this VTAM and LUs owned by another node or VTAM in the same network (for example, CICS in session with a terminal owned by another VTAM).

113 *value* **= PARALLEL SESSION PER LU**
value represents the average number of sessions for each LU with applications owned by this VTAM.

116 *value* **= INTERMEDIATE ROUTED SESSIONS**
value represents the number of sessions that this VTAM handles or routes for which neither session partner is defined to this VTAM.

119 *value* **= CROSS NETWORK LOGICAL UNIT SESSIONS**
value represents the number of non-6.2 LUs owned by this VTAM in session with a resource owned by another node or VTAM in another network (for example, a terminal logged onto CICS in another network).

120 *value* **= MULTIPATH CHANNEL MAJOR NODES**
value represents the number of channel-attached major nodes with multipath channel (MPC) support. MPC major nodes contain VBUILD,TYPE=CA definition statements with GROUP,LNCTL=MPC in the definition statement.

121 *value* **= MPC READ SUBCHANNEL ADDRESSES**
value represents the number of subchannel addresses with READ= specified on the LINE definition statement defined for a channel-attached major node for MPC support.

122 *value* **= MPC WRITE SUBCHANNEL ADDRESSES**
value represents the number of subchannel addresses with WRITE= specified on the LINE definition statement defined for a a channel-attached major node for MPC support.

123 *value* **= MPC READ BUFFER**
value represents MAXBFRU for all READ subchannels defined in this VTAM. The same MAXBFRU value should be used for all READ subchannels that are defined in the same MPC major node. The number entered indicates the number of pages VTAM allocates to receive data on the MPC CTC connection.

124 *value* **= MPC WRITE BUFFER**
value represents the sum of MAXBFRU for all WRITE subchannels defined in the adjacent VTAMs that are channel attached to this VTAM for MPC support. WRITE subchannel buffer size is dependent on the MAXBFRU value for READ subchannel on the other side of VTAM. The same MAXBFRU value should be used for all WRITE subchannels that are defined in the same MPC major node. The number entered indicates the number of pages VTAM allocates to send data on the MPC CTC connection.

125 *value* **= APPLICATION SESSIONS**
value represents the number of sessions in which both session partners are applications defined to this VTAM.

127 *value* **= TCP/IP MAJOR NODES**
value represents the number of TCP/IP major nodes defined to this VTAM. TCP/IP major nodes are defined to VTAM with with VBUILD,TYPE=TCP statements.

128 *value* **= MAXIMUM TCB VALUE FOR TCP/IP MAJOR NODES**
value represents the maximum value for the TCB operand that was coded for any of the TCP/IP major nodes activated by this VTAM. The TCB operand can be found on the VBUILD statement for the TCP/IP major node.

129 *value* **= TCP/IP LU-LU SESSIONS**
value represents the number of LU-LU sessions that will be established across the IP network. Count any LU-LU session that uses this VTAM to access the IP network, including sessions using this VTAM as an intermediate node to gain access to the IP network.

130 *value* **= ANYNET/MVS SNA OVER TCP/IP INSTALLED**
value is **YES** or **NO**.

140 *value* **= MAXIMUM DIRECTORY SIZE**
value represents the value specified or defaulted for the DIRSIZE start option.

141 *value* **= MAXIMUM TRS ROUTING TREES**
value represents the value specified or defaulted for the NUMTREES start option.

142 *value* **= END NODE TRANSMISSION GROUPS**
value represents the number of APPN transmission groups between this node and attached end nodes.

143 *value* **= NETWORK NODE TRANSMISSION GROUPS**
value represents the number of APPN transmission groups between this node and attached network nodes.

144 *value* **= VIRTUAL NODE TRANSMISSION GROUPS**
value represents the number of APPN transmission groups between this node and attached virtual nodes.

151 *value* **= DEPENDENT LU TOTAL FOR** *majornode*
value represents the total number of dependent LUs defined in a PU type 4 or 5 major node.

152 *value* **= ACTIVE DEPENDENT LU REQUESTERS**
value represents the number of dependent LU requesters currently being served by this VTAM dependent LU server.

153 *value* **= ACTIVE DLUR SERVED PU TOTAL**
value represents the total number of physical units owned by the dependent LU requesters served by this VTAM dependent LU server.

154 *value* **= ACTIVE DLUR SERVED LU TOTAL**
value represents the number of dependent logical units owned by the dependent LU requesters served by this VTAM dependent LU server.

155 *value* **= VR-BASED TRANSMISSION GROUPS**
value represents the number of virtual-route-based transmission groups between this node and other VTAM CDRMs.

156 *value* **= CONNECTION NETWORK DYNAMIC TGS**
value represents the number of dynamic transmission groups activated by this node for use with connection networks. VTAM will create these dynamic transmission groups when both of the following exist:

- A session is established between this VTAM and another node connected via the same virtual node.
- There is no existing predefined line to the other node.

157 *value* **= TRANSPORT RESOURCE LIST ENTRIES**
value represents the number of transport resource list entries (TRLEs) active within this VTAM.

159 *value* **= ADJACENT CLUSTER TABLE CPNAME ENTRIES**
value represents the number of predefined or dynamic entries in the active adjacent cluster table. The adjacent cluster table is used by APPN Directory Services to select the sequence of nodes to search during border node search logic.

160 *value* **= CP-CP SESSIONS**
value represents the number of CP-CP sessions between this node and other nodes.

161 *value* **= HIGHEST ELEMENT ADDRESS ASSIGNED**
value represents the highest network address element number that has been assigned by VTAM. *value* is displayed in decimal. The maximum number of element addresses that can be assigned is 65,536 (X'0000' through X'FFFF').

162 *value* **= HIGHEST EXTENDED ELEMENT ADDRESS ASSIGNED**
value represents the highest extended network address element number that has been assigned by VTAM. *value* is displayed in decimal. The maximum number of element addresses that can be assigned is 16,777,216. See the description of the *z/OS Communications Server: SNA Resource Definition Reference* for more information.

163 *value* **= SIZE OF THE DATA SPACE VIT TABLE**
value represents the size in bytes of the data space VIT table.

164 *value* **= NUMBER OF NON-EXTENDED ELEMENT ADDRESSES IN USE**
value represents the number of network element addresses currently in use by VTAM. value is displayed in decimal. The maximum number of element addresses that can be assigned is 65 536.

165 *value* **= NUMBER OF EXTENDED ELEMENT ADDRESSES IN USE**
value represents the number of extended network element addresses currently in use by VTAM. *value* is displayed in decimal. The maximum number of element addresses that can be assigned is 16 777 216. See the *z/OS Communications Server: SNA Resource Definition Reference* for more information.

IST1315I

VTAM issues this message when the number of statistics to be displayed exceeds the value specified for the MAX or NUM operand.

keyword is either **MAX** or **NUM**.

number is the value specified for either the MAX or NUM operand.

IST1345I

This message is a header message for the information displayed in IST1227I.

IST1349I

dddd-ddddd-ddd is the component identifier assigned by VTAM. This identifier is used by IBM for VTAM program maintenance.

Refer to the explanation of opening and closing an application program in *z/OS Communications Server: SNA Programming* for a description of vector lists and more information about the component identifier.

IST1454I

count is the number of statistics displayed.

System Action: Processing continues.

Operator Response: None.

Programmer Response: None.

IST1346I NCP DOES NOT SUPPORT CONNECTION NETWORK FUNCTION

Explanation: This message is part of a group of messages that VTAM issues in response to a VARY ACT for a line when the activation of the logical connection to the virtual node fails. The first message in the group is IST1166I. See the explanation of that message for a complete description.

IST1347I INSUFFICIENT STORAGE TO DELAY DISCONNECT OF *puname*

Explanation: VTAM issues this message when there is insufficient storage to delay the disconnection of a physical unit that was defined as DISCNT=DELAY.

puname is the name of the physical unit being disconnected.

System Action: VTAM will attempt to disconnect the physical unit without delay.

- If message IST169I is issued for the same physical unit, the disconnection without delay was successful.

- If message IST348I is issued for the same physical unit, there was insufficient storage to disconnect the physical unit even without delay.

Operator Response:

- If message IST169I follows this message, no action is required.
- If message IST348I follows IST1347I, enter a VARY INACT, TYPE=FORCE command for *puname*.
- If you have frequent command failures because of insufficient storage:
  - Enter the DISPLAY BFRUSE command. Message IST981I displays total VTAM private storage information. Enter the DISPLAY STORUSE command to display storage usage for storage pools.
  - Save the system log and request a console dump for problem determination.

Programmer Response: If insufficient storage is a recurring problem, you may need to increase storage as required.

See *z/OS Communications Server: SNA Diagnosis Vol 1, Techniques and Procedures* for information on storage-related problems.

See the *z/OS Communications Server: SNA Operation* for more information.

IST1348I VTAM STARTED AS *nodetype*

Explanation: VTAM issues this message in the following situations:

- During VTAM initialization
- In response to the DISPLAY VTAMOPTS command

  When this message is issued in response to a DISPLAY VTAMOPTS command, it is part of a message group headed by message IST1188I. See that message for a complete description of the group.
- In response to the DISPLAY TOPO command

  This message is issued when the DISPLAY TOPO command is issued from an end node or a migration data host and a command keyword that is not valid because it does not specify a local topology database entry. The topology database entry specified must be the local node or a transmission group originated at the local node. See the *z/OS Communications Server: SNA Operation* for the limitations on the DISPLAY TOPO commands issued on end nodes and migration data hosts.

nodetype indicates the node type of this host and is determined by start options that are specified or defaulted. Possible values include:

- **END NODE**
- **INTERCHANGE NODE**
- **MIGRATION DATA HOST**
- **NETWORK NODE**
- **SUBAREA NODE**

System Action: Processing continues.

Operator Response: None.

Programmer Response: None.

IST1349I COMPONENT ID IS *dddd-ddddd-ddd*

Explanation: VTAM issues this message in the following situations:

- During VTAM initialization

  When this message is issued during VTAM initialization, it is preceded by message IST020I.
- In response to the DISPLAY VTAMOPTS command

  When this message is issued in response to a DISPLAY VTAMOPTS command, it is part of a message group headed by message IST1188I. See that message for a complete description of the group.
- In response to the DISPLAY STATS,TYPE=VTAM command

  When this message is issued in response to a DISPLAY STATS,TYPE=VTAM command, it is part of a message group headed by message IST1345I. See that message for a complete description of the group.

dddd-ddddd-ddd is the component identifier assigned by VTAM. This identifier is used by IBM for VTAM program maintenance.

Refer to the *z/OS Communications Server: SNA Programming* for more information about vector lists and the component identifier.

System Action: Processing continues.

Operator Response: None.

Programmer Response: None.

IST1350I DEFINITION ERROR: *reason*

Explanation: VTAM issues this message to provide additional information about definition errors that are displayed in messages IST322I and IST323I.

reason indicates the cause of the error and can be one of the following:

DATA LIMIT EXCEEDED AT® DLCADDR ID *id*
The maximum number of bytes of data that can be specified for all the DLCADDRs on a PATH definition statement is 252 bytes. This includes two bytes of subvector headers for each DLCADDR that has been coded. The data limit was exceeded while VTAM was processing DLCADDR ID *id*. The entire definition statement containing this DLCADDR ID is not usable.

DELAY NOT VALID FOR PU OR VBUILD TYPE
DISCNT=DELAY was specified in the definition but the PU or VBUILD type is incorrect. When DELAY is specified, the PU type must be 2.0 or 2.1 and the VBUILD type must be MODEL or SWNET. The default value is used for the DISCNT parameter.

DLCADDR ID *id* **– DATA IS NOT TYPE** *type*
The data provided with DLCADDR subfield ID *id* is inconsistent with the specified data type. The entire definition statement containing this DLCADDR ID is not usable.

DLCADDR ID *id* **– DATA TYPE IS NOT VALID**
The DLCADDR data type must be D, C, X, A, or BCD. The entire definition statement containing this DLCADDR ID is not usable.

DLCADDR ID *id* **IS NOT BETWEEN 1–96**
The specified subfield ID must be a decimal in the range 1–96, inclusive. The entire definition statement containing this DLCADDR ID is not usable.

Note: If this message refers to the first DLCADDR coded in a PATH definition statement, the system will do a limited amount of checking on subsequent DLCADDRs encountered for the PATH.

DLCADDR [*id***] REQUIRES AT LEAST 3 VALUES**
One DLCADDR on the PATH definition statement does not have all the required information specified. If the DLCADDR ID was specified, *id* is displayed. The entire definition statement containing this DLCADDR ID is not usable.

Note: If this message refers to the first DLCADDR coded in a PATH definition statement, the system will do a limited amount of checking on subsequent DLCADDRs encountered for the PATH.

DUPLICATE DLCADDR ID *id* **IS IGNORED**
Subfield ID *id* occurs more than once, and the specifications do not have a DLCADDR with a subfield ID of 1 between them. The second specification is ignored.

FIRST DLCADDR ID MUST BE 1
The first DLCADDR on the definition statement does not have a subfield ID of 1. The entire definition statement containing this DLCADDR ID is not usable.

Note: Since this message refers to the first DLCADDR coded in a definition statement, the system will perform a limited amount of checking on subsequent DLCADDRs encountered.

HOSTNAME NOT VALID WITH IPADDR
When specified on a PATH statement, the HOSTNAME keyword is not valid if IPADDR is also specified on that PATH statement.

IST1350I

HPR NOT VALID WHEN HPR=NONE
The HPR keyword is not valid when the host node is configured as not HPR-capable (HPR=NONE, or HPR=(NONE,NONE)).

INVALID TO SPECIFY THIS HOST EN ON NETSRVR
It is not valid to specify the CP name of this host end node on a NETSRVR definition statement.

LLERP NOT VALID FOR LOCAL SNA PUS
LLERP is not a valid keyword when coded on a PU statement in a local SNA definition deck.

LLERP NOT VALID WHEN HPR=NONE
LLERP is not a valid keyword for the GROUP, LINE, or PU statement if HPR=NONE was coded as a start option.

LLERP ONLY VALID WHEN HPR=YES
LLERP is not a valid keyword on the PU statement if HPR=NO was also coded on the PU statement.

LMI PU NOT VALID IN FRSESET
An attempt was made to use a local management interface (LMI) protocol PU in the FRSESET definition in message IST323I, and this is not valid. See the *NCP, SSP, and EP Resource Definition Reference* for information on the LMI keyword.

MNPS NOT SUPPORTED IN THIS ENVIRONMENT
PERSIST=MULTI is only valid if the VTAM on which it resides is running in an environment that supports multinode persistent sessions. The environmental requirements are:
- VTAM is running in a sysplex (non-local mode).
- The VTAM start parameter STRMNPS must specify a valid structure name, or the STRMNPS start option should not be specified.
- VTAM must be defined as an end node (EN) or a migration data host (MDH) that is a rapid transit protocol (RTP) level node (HPR=RTP start option).

Note: If PERSIST=M is specified on a non-modeled application deck at a Network Node (NN), it is not supported. See the *z/OS Communications Server: SNA Network Implementation Guide*. Change the application deck to be a modeled application. For example change the last character in the name of the application to an ***** and it would now be a modeled application.

MORE THAN ONE XCF PU MODEL DEFINED
Only the first XCF PU model activated is used. This XCF PU model activation is ignored because it is not the first.

puname **ALREADY USED IN** *frsesetname*
puname cannot be used in the FRSESET definition in message IST323I because it has already been either statically or dynamically defined in FRSESET *frsesetname*.

puname **DEFINED BUT NOT USED IN FRSESET**
puname is correctly defined in the NCP, but is not being used in the FRSESET definition in message IST323I.

puname **NOT PREVIOUSLY DEFINED IN NCP**
- *puname* has been used in the FRSESET definition in message IST323I, but is not defined in the NCP.
- The OWNER= value in the FRSESET is different than the physical resource pointed to by the PHYSRSC operand.
- The NETID on the NCP build macro is different than the NETID on VTAM.

STATIC AND DYNAMIC NOT ALLOWED IN FRSESET
The FRSESET definition in message IST323I contains both statically and dynamically defined PUs. All PUs in a FRSESET must be either static or dynamic.

VRTG NOT VALID FOR CROSS-NET CDRM
The VRTG keyword is not valid when specified on a CDRM statement where the corresponding NETWORK statement NETID is not the same network as this node.

VRTG NOT VALID FOR HOST CDRM
The VRTG keyword is not valid when specified on the host CDRM (SUBAREA specified equals the subarea number of this node).

VRTG ONLY VALID FOR ICN OR MDH
The VRTG keyword is not valid when the node is configured as an APPN or a subarea node. It is valid only when the node is configured as an interchange network node or a migration data host.

System Action: Processing continues.

Operator Response: Save the system log for problem determination.

Programmer Response: Use the information in IST322I, IST323I, and this message to assist you in correcting the error.

See the *z/OS Communications Server: SNA Resource Definition Reference* for additional information about VTAM definition statements. See the *NCP, SSP, and EP Resource Definition Reference* for additional information about NCP definition statements.

IST1351I DLURNAME DIAL NUMBER PID GID CNT

Explanation: This message is the first in a group of messages that VTAM issues in response to a DISPLAY PATHS command. A complete description of the message group follows.

```
 IST1351I   DLURNAME       DIAL NUMBER                PID GID CNT
 IST168I    dlurname   {phonenum|linename|blanks.}    pid gid cnt {AVA|NAV} {MAN|AUT|DIR}
[IST1575I DIALNO PID: pid[instance]]
[IST1318I parameter_value]
[IST1319I    parameter_value]
:
:
 IST314I  END
```

IST1351I

This message is a header message for the information displayed in message IST168I.

DLURNAME is the dependent LU requester (DLUR) name.

IST168I

dlurname is the dependent LU requester name.

phonenum is a telephone number (for non-X.21 lines).

linename is a line name (for X.21 lines).

pid is the path identifier (PID).

gid is the group identifier (GID) for a group of paths across all physical units.

cnt is the number of times the dial operation is to be retried at the NCP.

AVA indicates that the path is available for use by VTAM.

NAV indicates that the path is not available for use by VTAM.

MAN indicates manual dial.

AUT indicates automatic dial for non-X.21 lines.

DIR indicates direct dial for X.21 lines.

IST1318I

parameter_value is the first 60 characters of the DIALNO value specified on the PATH definition statement, when the number of characters exceeds 32.

IST1319I

This message is used to display overflow information from *parameter_value* in IST1318I.

IST1575I

This message is issued when DIALNO operand specified on the PATH definition statement exceeds 32 characters and cannot be displayed in message IST168I.

pid is the path identifier specified on the PATH definition statement.

instance indicates that the *parameter_value* in messages IST1318I and IST1319I that follow correspond to the *instance* instance of the message IST168I with *pid* of **000**. You must count the group of IST168I messages to find the *instance* instance of message IST168I with a *pid* of **000**. *instance* is only displayed when *pid* is **000**.

System Action: Processing continues.

Operator Response: None.

Programmer Response: None.

IST1352I DLUR NAME DLUS CONWINNER STATE DLUS CONLOSER STATE

Explanation: This message is the first in a group of messages that VTAM issues in response to a DISPLAY DLURS command. The display lists the dependent LU requesters (DLURs) that are supported by the dependent LU server (DLUS). It also displays the CPSVRMGR session pipe status. The CPSVRMGR pipe consists of two LU 6.2 sessions, a contention winner (conwinner) and a contention loser (conloser). The states of both sessions are displayed.

```
IST350I    DISPLAY TYPE = DEPENDENT LU REQUESTER
IST1352I   DLUR NAME        DLUS CONWINNER STATE     DLUS CONLOSER STATE
IST1353I   dlurname         conwinner_state          conloser_state
IST314I    END
```

IST1352I

This message is a header message for the information displayed in message IST1353I.

IST1353I

dlurname is the network-qualified CP name of the dependent LU requester in the form *netid.name*.

conwinner_state is the status of the DLUS contention winner session to the specified DLUR. The DLUS sends data on the DLUS contention winner session.

conloser_state is the status of the DLUS contention loser session to the specified DLUR. The DLUS receives data on the DLUS contention loser session.

Possible values of *conwinner_state* and *conloser_state* are:
- **ACTIVE**
- **INACTIVE**
- **PENDING ACTIVE**
- **PENDING INACTIVE**
- **RESET**

System Action: Processing continues.

Operator Response: None.

Programmer Response: None.

IST1353I *dlurname conwinner_state conloser_state*

Explanation: VTAM issues this message as part of a group of messages in response to a DISPLAY DLURS command. The first message in the group is IST1352I. See the explanation of that message for a complete description.

IST1354I DLUR NAME = *dlurname* **MAJNODE =** *majnode*

Explanation: This message is part of several message groups that VTAM issues:

- When a connection request for a DLUR served physical unit is rejected. The first message in that group is IST680I. See the explanation of that message for a complete description.
- In response to a DISPLAY ID=*dlur_pu* command.

  dlurname is the network-qualified CP name of the dependent LU requester (DLUR) in the form *netid.name*. *dlurname* is the DLUR associated with the physical unit specified on the ID operand of the command.

  majnode is the name of the switched major node of the physical unit specified on the ID operand of the command.

System Action: Processing continues.

Operator Response: None.

Programmer Response: None.

IST1355I PHYSICAL UNITS SUPPORTED BY DLUR *dlurname*

Explanation: This message is part of a subgroup of messages that VTAM issues in response to a DISPLAY ID=*dlurname* command. It is a header message for IST089I, which contains information on the PUs that are supported by the DLUR specified on the DISPLAY command. A complete description of the message subgroup follows:

```
IST1355I PHYSICAL UNITS SUPPORTED BY DLUR dlurname
IST089I  nodename TYPE = nodetype, status
:
```

IST1355I

dlurname is the name of the CDRSC representing the DLUR that is supporting the physical units being displayed. *dlurname* is the network-qualified CP name of the dependent LU requester (DLUR) in the form *netid.name*.

IST089I

nodename is the physical unit that is supported by *dlurname*.

nodetype is always **PU**.

status is the status of the physical unit. See the *z/OS Communications Server: IP and SNA Codes* for more information on *status*.

System Action: Processing continues.

Operator Response: None.

Programmer Response: None.

IST1356I NETWORK NODE DOES NOT PROVIDE REQUIRED SERVER FUNCTION

Explanation: VTAM issues this message as part of a group of messages. The first message in the group is IST1110I. See the explanation of that message for a complete description.

IST1357I CPCP

Explanation: VTAM issues this message as part of a group of messages. The first message in the group is IST1295I. See the explanation of that message for a complete description.

IST1358I NO QUALIFYING MATCHES *for_name*

Explanation: VTAM issues this message when there are no resource names found that match the wildcard name specified on the ID operand of the DISPLAY command and other restrictions identified by keywords on the command (e.g. SCOPE, IDTYPE). It is issued for the following commands:

DISPLAY APPLS
DISPLAY CDRMS
DISPLAY CDRSCS
DISPLAY CLSTRS
DISPLAY GROUPS
DISPLAY GRAFFIN
DISPLAY LINES
DISPLAY MAJNODES
DISPLAY PENDING
DISPLAY RSCLIST
DISPLAY STATIONS
DISPLAY STATS,TYPE=CFS
DISPLAY SRCHINFO
DISPLAY TERMS
DISPLAY TGPS

for_name is the name specified on the ID operand of the DISPLAY command.

System Action: Processing continues.

Operator Response: None.

Programmer Response: None.

IST1359I MEMBER NAME OWNING CP SELECTABLE APPC

Explanation: VTAM issues this message as part of a group of messages in response to a DISPLAY ID=*generic_name* command. A complete description of the message group follows.

```
 IST075I   NAME = generic_name, TYPE = GENERIC RESOURCE
 IST1359I  MEMBER NAME        OWNING CP   SELECTABLE  APPC
 IST1360I  member_name        owning_cp   selectable  appc
 IST1360I  member_name        owning_cp   selectable  appc
⋮
[IST1393I GENERIC RESOURCE NAME RESOLUTION EXIT IS exit_name]
 IST314I   END
```

IST075I

This message identifies the type of information in the display. The type is always **GENERIC RESOURCE** for this message group.

generic_name is the name of the resource that is displayed. See Chapter 15, “Node and ID types in VTAM messages” on page 697 for more information.

IST1360I

member_name is the network-qualified name for the resource in the form *netid.name*. An application name registered under a generic name is called a member name.

owning_cp is the name of the control point (CP) that owns the resource. It is in the same network as *member_name*.

selectable can be one of the following:

YES Indicates that the resource is available to be selected for resolution.

NO Indicates that the resource is not available to be selected for resolution because *owning_cp* is an end node that does not have CP-CP sessions with its network node server.

appc indicates whether the resource supports advanced program-to-program communication (APPC=YES on the APPL definition statement). Possible values are **YES** and **NO**.

IST1393I

If exit resolution is performed, *exit_name* is used. If the user has specified that the exit should no longer be used, the message will no longer be displayed once the session has been attempted with the generic resource. VTAM will resolve the generic resource names until the user specifies another exit.

exit_name is the name of the generic resource exit.

System Action: Processing continues.

Operator Response: None.

Programmer Response: None.

IST1360I *member_name owning_cp selectable appc*

Explanation: VTAM issues this message as part of a group of messages. The first message of this group is IST1359I. See the explanation of that message for a complete description.

System Action: Processing continues.

Operator Response: None.

Programmer Response: None.

IST1361I *name* **FROM** *source* **IGNORED – NAME IS NOT VALID**

Explanation: VTAM issues this message when a request to resolve a generic resource name to a real name was made, but the resolved name was not a valid name.

name is the name that was returned because it was not valid.

source indicates the function that returned the name. Possible values are:

ISTEXCGR
The generic resource name resolution exit returned *name*, which is not a valid resource name.

WORKLOAD MANAGER
The WORKLOAD MANAGER selection exit returned *name*, which is not valid.

System Action: VTAM will resolve the generic name to the real name with the least number of active sessions. Processing continues.

Operator Response: Save the system log for problem determination.

Programmer Response: If *source* is **ISTEXCGR**, check the generic resource name resolution exit (ISTEXCGR) to ensure that it is passing back the correct information to VTAM. If message IST1366I is displayed, refer to page 486 for more information.

IST1363I **GENERIC RESOURCE NAME** *generic_name* **REPRESENTS** *resource*

Explanation: This message is part of a group of messages that VTAM issues in response to a DISPLAY ID=*resource* command. The first message in the group is IST075I.

resource is the network-qualified name of the resource specified in the command and in message IST075I.

generic_name is the generic resource name given to *resource*.

System Action: Processing continues.

Operator Response: None.

Programmer Response: None.

IST1364I *name* **IS A GENERIC RESOURCE NAME FOR:**

Explanation: VTAM issues this message as part of a group of messages in response to a DISPLAY SESSIONS command. The first message in the group is IST873I. See the explanation of that message for a complete description.

IST1365I **CONNECTION ATTEMPT TO STRUCTURE** *structure_name* **FAILED**

Explanation: This message is the first of a group of messages VTAM issues in response to a connection failure to the coupling facility structure. The second message in the group gives the reason for the failure. A complete description of the message group follows.

```
IST1365I  CONNECTION ATTEMPT TO structure_name FAILED
IST1366I  MVS MACRO macname FAILED - RTN CODE= returncode - REASON CODE= reasoncode
IST314I   END
```

IST1365I

structure_name is the name of the coupling facility structure.

IST1366I

The connection failure was the result of a MVS macro failure.

macname is the name of the MVS macro that returned the nonzero return code.

returncode is the return code sent by the MVS macro.

reasoncode is the reason code sent by the MVS macro.

Refer to page 486 for more information on message IST1366I.

System Action: See the description of message IST1366I.

Operator Response: See the description of message IST1366I.

IST1366I

Programmer Response: See the description of message IST1366I.

IST1366I MVS MACRO *macroname* **FAILED – RTN CODE=** *returncode* **– REASON CODE=***reasoncode*

Explanation: VTAM issues this message in response to a nonzero return code from an MVS macro. It can be issued alone or in a group of messages. The first message in the group is IST085I or IST1365I. See the descriptions of those messages for more information.

macroname is the name of the MVS macro which returned the nonzero return code. Possible values are:

ASASYMBM
The macro that performs symbolic substitution.

ENFREQ
The macro that waits to connect to the coupling facility structure.

IWMGRREG
The macro that accepts information about a newly-registered instance of a generic resource.

IWMGRSEL
The macro that selects a specific real instance of a generic resource.

IXCARM
The macro that interfaces with the automatic restart manager.

IXCJOIN
The macro that places a coupling facility member in the activity state.

IXCQUERY
The macro that retrieves information about the coupling facility structure.

IXLCONN
The macro that makes the connection to the coupling facility structure.

IXLMG
The macro that collects statistics on the structure in response to a DISPLAY STATS command.

IXLREBLD
The macro that starts a rebuild for a coupling facility structure.

reasoncode and *returncode* provide additional information on the cause of the error. If *macroname* is **ENFREQ**, then *reasoncode* will always be ***NA***. See the appropriate MVS manual for more information on *reasoncode* and *returncode*.

System Action:

The system action depends on the value for *macroname*:

ASASYMBM
VTAM initialization will fail.

ENFREQ
VTAM initialization will fail. In the case of APPN host-to-host channel dynamics, processing will continue, but the APPN host-to-host channel dynamics function will not be available for use.

IWMGRREG
Processing continues.

IWMGRSEL
Processing continues.

IXCARM
Processing continues.

IXCQUERY
No connection to the structure will be attempted.

IXLCONN
If the problem is corrected, the system will attempt to reconnect with the coupling facility structure. Message IST1370I indicates that the structure has been reconnected.

IXLMG
Processing continues.

IXLREBLD
A rebuild was not started, processing continues.

Operator Response:

The operator response depends on the value for *macroname*:

ASASYMBM
Save the system log for problem determination.

ENFREQ
Save the system log for problem determination.

IWMGRREG
None.

IWMGRSEL
None.

IXCARM
None.

IXCQUERY
Save the system log for problem determination.

IXLCONN
Save the system log for problem determination.

IXLMG
None.

IXLREBLD
None.

Programmer Response:

The programmer response depends on the value for *macroname*:

ASASYMBM
Correct the problem and restart VTAM.

ENFREQ
Correct the problem and restart VTAM.

IWMGRREG
None.

IWMGRSEL
None.

IXCARM
None.

IXCQUERY
Correct the problem and restart VTAM.

IXLCONN
If the problem is corrected, the system will attempt to reconnect with the coupling facility structure. Message IST1370I indicates that the structure has been reconnected.

Note: If *returncode* is **08** and *reasoncode* is **xxxx081F**, the connection attempt failed because another node with the same SSCP name has connected to the same structure. A VTAM node uses its SSCP name to build a connection name which is specified on IXLCONN. Each connection to a given structure must have a unique connection name; therefore, each VTAM which connects to a given structure must have an SSCP name which is different from all other VTAM nodes connected to that structure.

IXLMG
None.

IXLREBLD
Restore connectivity from all systems in the sysplex that have lost connectivity to a coupling facility. Use D XCF,CF to display systems connected to a coupling facility. For more information about D XCF,CF see *z/OS MVS System Commands* .

For more information on MVS macros and the return and reason codes sent by the macros, refer to the following MVS documentation (the documentation must be for V5R1 or later):

ASASYMBM
z/OS MVS Programming: Assembler Services Reference ABE-HSP

ENFREQ
z/OS MVS Programming: Authorized Assembler Services Reference ENF-IXG

IWM Prefix
z/OS MVS Programming: Workload Management Services

IXC Prefix
z/OS MVS Programming: Sysplex Services Reference

IXL Prefix
z/OS MVS Programming: Sysplex Services Reference

IST1367I COUPLING FACILITY STRUCTURE *structure* **NOT AVAILABLE**

Explanation: This message is the first of a group of messages that VTAM issues in response to a DISPLAY STATS,TYPE=CFS when the coupling facility structure cannot be accessed. A description of the message group follows:

```
 IST350I   DISPLAY TYPE = STATS,TYPE=CFS
 IST1367I  COUPLING FACILITY STRUCTURE structure NOT AVAILABLE
[IST1368I  CONNECTION IS PENDING]
 IST314I   END
```

structure is the name of the coupling facility structure.

If IST1368I is displayed, VTAM is monitoring for changes in the coupling facility resources that would allow it to connect to *structure*. When a change occurs, VTAM will automatically attempt to connect to *structure*. If IST1368I is not displayed, VTAM is not monitoring for changes in coupling facility resources and the VARY NET,CFS,ACTION=CONNECT command will need to be issued to attempt a connection to *structure*.

System Action: Processing continues.

Operator Response: If IST1368I is not displayed, issue the VARY NET,CFS,ACTION=CONNECT command to attempt a connection to *structure*. Otherwise, save the system log for problem determination. See the *z/OS Communications Server: SNA Operation* for more information about the VARY CFS command.

Programmer Response: If IST1368I is displayed, check the system log for previously issued messages IST1365I and IST1366I. In message IST1366I *returncode* and *reasoncode* will indicate why the connection could not be established. When the problem is corrected, VTAM will automatically attempt the connection again.

IST1368I CONNECTION IS PENDING

Explanation: This message is part of a message group VTAM issues to indicate that the connection to the coupling facility structure is defined and active in the coupling facility policy but VTAM currently does not have a connection. The first message in the group is IST1367I. See the explanation of that message for additional information.

System Action: Processing continues.

Operator Response: None.

Programmer Response: None.

IST1369I *activity* **IS IN PROGRESS**

Explanation: This message is part of a message group VTAM issues in response to a DISPLAY STATS,TYPE=CF command. The first message in the group is IST1370I. See the explanation of that message for more information.

System Action: Processing continues.

Operator Response: None.

Programmer Response: None.

IST1370I *cpname* **IS CONNECTED TO STRUCTURE** *structure*

Explanation: This message is issued when VTAM has successfully connected to the structure. It is also part of a group of messages that VTAM issues in response to a DISPLAY STATS, TYPE=CFS command. This message group displays the current statistics for the coupling facility structure. A complete description of the message group follows:

```
 IST350I  DISPLAY TYPE = STATS,TYPE=CFS
 IST1370I cpname IS CONNECTED TO STRUCTURE structure
 IST1797I STRUCTURE TYPE = type
[IST1517I LIST HEADERS = list_hdrs — LOCK HEADERS = lock_ents]
[IST1518I BASE STRUCTURE IS strname]
[IST1372I STRUCTURE structure IS BEING DUMPED]
[IST1369I activity IS IN PROGRESS]
[IST1796I SYSTEM-MANAGED DUPLEXING REBUILD IS IN PROGRESS]
[IST1388I EXCESSIVE TIME elapsed DETECTED FOR STRUCTURE structure]
 IST1373I STORAGE ELEMENT SIZE = element_size
 IST924I  -----------------------------------------------------
 IST1374I                        CURRENT        MAXIMUM           PERCENT
 IST1375I STRUCTURE SIZE         curr_size      max_size          percent
 IST1376I STORAGE ELEMENTS       curr_elements  max_elements      percent
 IST1377I LIST ENTRIES           curr_entries   max_entries       percent
[IST1519I ALTERNATE STRUCTURES ARE:]
[IST1567I alt_structure   alt_structure  alt_structure]
[IST924I  ---------------------------------------------------- ]
[IST1823I LIST DVIPA SYSNAME  TCPNAME                # ASSIGNED PORTS]
[IST1824I list dvipa                                       totalports]
[IST1825I            sysname  tcpname                        numports]
[IST1826I              PORTS: port1 port2 port3 port4 port5 port6]
[IST1827I                     port1 port2 port3 port4 port5 port6]
[IST1828I LIST listnum IS UNCLAIMED]
[IST1829I NO CLAIMED LISTS FOUND FOR THE SPECIFIED DVIPA]
[IST1830I NO CLAIMED LISTS FOUND]
[IST1834I LIST DVIPA SYSNAME TCPNAME     #ENTRIES    TGCOUNT SEQNUMBER]
[IST1835I list dvipa]
[IST1836I            sysname tcpname     #entries    tgcount]
[IST1837I            sysname tcpname     #entries            seqnumber]
[IST1838I               LIST ENTRY KEYS:]
[IST1839I                list_entry_key]
[IST1315I DISPLAY TRUNCATED AT keyword = number]IST314I  END
```

IST1315I

This message is issued when the number of lines of EZBEPORT or EZBDVIPA structure information to be displayed equals the value specified for the MAX or NUM operand.

keyword is either MAX or NUM.

number is the value specified for either the MAX or NUM operand.

IST1369I

activity is:

REBUILD
The coupling facility structure is currently being rebuilt. Message IST1382I will be displayed later if the rebuild was terminated before it was completed. Message IST1383I will be displayed later when the rebuild is completed successfully.

IST1370I

cpname is the network-qualified name of the CP in the form *netid.name*.

structure is the name of the coupling facility structure.

IST1372I

This message is displayed if the structure is currently being dumped as the result of an MVS operator command.

structure is the name of the coupling facility structure.

IST1373I

IST1370I

This message shows storage element size.

element_size is the size, in bytes, of each storage element.

*****NA***** is displayed if *element_size* is temporarily unavailable.

IST1374I

This message is a header message for the information displayed in messages IST1375I, IST1376I, and IST1377I.

IST1375I

This message shows the structure size.

curr_size is the current size, in kilobytes, of the structure. This is the total amount of storage available in the structure and does not indicate the amount of structure storage in use.

max_size is the maximum size, in kilobytes, of the structure. This is the value coded for the SIZE parameter on the structure definition in the CFRM policy.

percent is the fraction of storage defined by curr_size in use.

*****NA***** is displayed if these statistics are temporarily unavailable.

IST1376I

This message shows the number of storage elements allocated for the structure.

curr_elements is the current number of storage elements allocated for the structure.

max_elements is the maximum number of elements that can be allocated for the structure at its current size.

percent is the fraction of elements in use.

*****NA***** is displayed if these statistics are temporarily unavailable.

IST1377I

This message shows the number of list entries allocated for the structure.

curr_entries is the current number of list entries allocated for the structure.

max_entries is the maximum number of list entries that can be allocated for the structure at its current size.

percent is the fraction of entries in use.

*****NA***** is displayed if these statistics are temporarily unavailable.

IST1388

This message indicates that a coupling facility related process is taking an excessive amount of time to complete.

IST1517I

list_hdrs is the number of list headers currently allocated in the coupling facility structure.

lock_ents is the number of entries in the coupling facility structure's lock table. A value of zero indicates no lock table is being used.

IST1518I

This message indicates that the coupling facility structure is an alternate structure for a VTAM function that utilizes multiple structures.

strname is the name of the alternate structure's base structure.

See *z/OS Communications Server: SNA Network Implementation Guide* for more information about base and alternate coupling facility structure.

IST1519I

This message indicates that the coupling facility structure is a base structure for a VTAM function that utilizes multiple structures and there are alternate structures defined. Message IST1567I follows listing all alternate structures associated with the base structure.

See *z/OS Communications Server: SNA Network Implementation Guide* for more information about base and alternate coupling facility structure.

IST1567I

This message is a list of all the alternate structures associated with the base structure identified in message IST1518I.

IST1796I

The coupling facility structure is currently undergoing a duplexing rebuild. Message IXC577I will be issued when the structure reaches the duplexing established phase. See the *z/OS MVS System Messages, Vol 10 (IXC-IZP)* for a complete explanation of IXC557I.

IST1797I

This message shows the type of coupling facility structure.

type is the type of coupling facility structure. Possible values are CACHE, LIST, or LOCK.

IST1823I

This message is displayed if a D NET,STATS,TYPE=CFS command is issued with STRNAME=EZBEPORT and either the LIST or DVIPA keyword is specified. This message is a heading for a table showing the contents of the EZBEPORT CFS structure. The contents are displayed in messages IST1824I, IST1825I, IST1826I, and IST1827I.

IST1824I

This message is displayed if a D NET,STATS,TYPE=CFS command is issued with STRNAME=EZBEPORT and either the LIST or DVIPA keyword is specified. This message shows the list number, the Dynamic Virtual IP Address (DVIPA) associated with the list, and the number of ephemeral ports currently assigned to SYSPLEXPORTS users of this DVIPA.

list is the list number in the EZBEPORT structure containing the information described.

dvipa is the Dynamic Virtual IP Address associated with this list number.

totalports is the number of ephemeral ports assigned to users of this DVIPA. It is the total of all the values displayed in *numports* in the IST1825I messages for TCPIP stacks associated with this DVIPA.

IST1825I

This message will be displayed if a D NET,STATS,TYPE=CFS command is issued with STRNAME=EZBEPORT and either the LIST or DVIPA keyword is specified. This message shows the MVS system name and the TCPIP stack name for a TCPIP stack that is using the Coupling Facility to assign ephemeral ports for this DVIPA. It also shows the number of ephemeral ports currently assigned to that TCPIP stack.

sysname is the name of the MVS node on which the TCPIP stack is running.

tcpname is the job name of the TCPIP stack.

numports is the number of ephemeral ports assigned to users of this TCPIP stack for the DVIPA displayed in the preceding IST1824I message.

IST1826I

This message will be displayed if a D NET,STATS,TYPE=CFS command is issued with STRNAME=EZBEPORT, either the LIST or DVIPA keyword is specified, and SCOPE=ALL is specified. This message displays the first six ephemeral ports assigned to the users of the TCPIP stack displayed in the preceding IST1825I message. Any further assigned ports will be displayed in IST1827I.

IST1827I

This message will be displayed if a D NET,STATS,TYPE=CFS command is issued with STRNAME=EZBEPORT, either the LIST or DVIPA keyword is specified, and SCOPE=ALL is specified. This message displays the next six ephemeral ports assigned to the users of the TCPIP stack displayed in the preceding IST1825I message. This message will be repeated as many times as necessary to display the remaining assigned ephemeral ports for this TCPIP stack.

IST1828I

This message will be displayed if a D NET,STATS,TYPE=CFS command is issued with STRNAME=EZBEPORT and the LIST keyword is specified. This message will be displayed only if the list number specified on the LIST keyword is unclaimed. The term unclaimed means that no DVIPA is associated with that list number.

listnum is the input list number that was found to be unclaimed.

IST1829I

This message will be displayed if a D NET,STATS,TYPE=CFS command is issued with STRNAME=EZBEPORT and the DVIPA keyword is specified. This messge will be displayed only if no lists in the structure have been claimed for the specified DVIPA. The term claimed means that a DVIPA is associated with a list number.

IST1830I

This message will be displayed if a D NET,STATS,TYPE=CFS command is issued with STRNAME=EZBEPORT and LIST=ALL is specified. This message will be displayed only if no claimed lists are found in the structure. The term claimed means that a DVIPA is associated with a list number.

IST1834I

This message is displayed if a D NET,STATS,TYPE=CFS command is issued with STRNAME=EZBDVIPA and either the LIST or DVIPA keyword is specified. This message is a heading for a table showing the contents of the EZBDVIPA CFS structure. The contents are displayed in messages IST1835I, IST1836I, IST1837I, IST1838I and IST1839I.

IST1835I

This message is displayed if a D NET,STATS,TYPE=CFS command is issued with STRNAME=EZBDVIPA and either the LIST or DVIPA keyword is specified. This message shows the list number and the Dynamic Virtual IP Address (DVIPA) associated with the list.

list is the list number in the EZBDVIPA structure containing the information described.

dvipa is the Dynamic Virtual IP Address associated with this list number.

IST1836I

This message will be displayed if a D NET,STATS,TYPE=CFS command is issued with STRNAME=EZBDVIPA and either the LIST or DVIPA keyword is specified. This message shows the MVS system name and the TCPIP stack name for a TCPIP stack that is using the Coupling Facility to track security associations for this DVIPA. It also shows the number of security association entries currently associated with the DVIPA and the takeover/giveback count for the DVIPA.

sysname is the name of the MVS node on which the TCPIP stack is running.

tcpname is the job name of the TCPIP stack.

#entries is the number of security association entries currently associated with the DVIPA displayed in the preceding IST1835 message.

tgcount is the takeover/giveback count. It indicates the number of times the DVIPA has been taken over by another TCPIP stack or given back to the original owning stack.

IST1837I

This message will be displayed if a D NET,STATS,TYPE=CFS command is issued with STRNAME=EZBDVIPA and either the LIST or DVIPA keyword specified. This message will only be displayed for a list used to trace the outbound cryptographic distribution sequence number for a DVIPA. The message shows the MVS system name and the TCPIP stack name for a TCPIP stack that is using the Coupling Facility to track security associations for this DVIPA. It also shows the number of sequence number entries associated with the DVIPA for this list and the sequence number used for outbound cryptographic distribution for the DVIPA.

sysname is the name of the MVS node on which the TCPIP stack is running.

tcpname is the job name of the TCPIP stack.

#entries is the number of sequence number entries currently associated with the DVIPA displayed in the preceding IST1835 message. The value will always be 1.

seqnumber is the outbound cryptographic distribution sequence number for this DVIPA.

IST1838I

This message is displayed if a D NET,STATS,TYPE=CFS command is issued with STRNAME=EZBDVIPA, SCOPE=ALL, and either the LIST or DVIPA keyword specified. This message is a heading for a table showing the list entry keys of each entry on the list specified in the preceding IST1835I message. Each list entry key is displayed in an IST1839I message following this message.

IST1839I

This message is displayed if a D NET,STATS,TYPE=CFS command is issued with STRNAME=EZBDVIPA, SCOPE=ALL, and either the LIST or DVIPA keyword specified.

list_entry_key is the 32-byte list entry key (in hexadecimal format) of an entry on the list specified in the preceding IST1835I message.

System Action: Processing continues.

Operator Response: *****NA***** is displayed for some statistics if the statistic is temporarily unavailable. This may occur when the structure is being dumped (IST1372I is issued) or during the rebuild process (IST1369I is issued). If the structure is being dumped, reissue the command after the dump is complete. If a rebuild is in progress, reissue the command after the rebuild has completed.

Programmer Response: None.

IST1371I STRUCTURE TYPE = *type* **– VERSION NUMBER =** *version*

Explanation: This message is part of a group of messages VTAM issues in response to a DISPLAY STATS,TYPE=CFS command. The first message in the group is IST1370I. See the explanation of that message for a complete description.

System Action: Processing continues.

Operator Response: None.

Programmer Response: None.

IST1372I STRUCTURE *structure* **IS BEING DUMPED**

Explanation: This message is part of a group of messages VTAM issues in response to a DISPLAY STATS,TYPE=CFS command. It will only be displayed if the structure is currently being dumped as the result of an MVS operator command. The first message in the group is IST1370I. See the explanation of that message for a complete description.

System Action: Processing continues.

Operator Response: None.

Programmer Response: None.

IST1373I STORAGE ELEMENT SIZE = *elementsize*

Explanation: This message is part of a group of messages VTAM issues in response to a DISPLAY STATS,TYPE=CFS command. The first message in the group is IST1370I. See the explanation of that message for a complete description.

System Action: Processing continues.

Operator Response: None.

Programmer Response: None.

IST1374I CURRENT MAXIMUM PERCENT

Explanation: This message is part of a group of messages VTAM issues in response to a DISPLAY STATS,TYPE=CFS command. The first message in the group is IST1370I. See the explanation of that message for a complete description.

IST1375I STRUCTURE SIZE *curr_size max_size percent*

Explanation: This message is part of a group of messages that VTAM issues in response to a DISPLAY STATS,TYPE=CFS command. This message describes the size attributes, in kilobytes, of the structure. The first message in the group is IST1370I. See the explanation of this message for a complete description.

IST1376I STORAGE ELEMENTS *current_elements maximum_ elements percent*

Explanation: This message is part of a group of messages VTAM issues in response to a DISPLAY STATS,TYPE=CFS command. The first message in the group is IST1370I. See the explanation of that message for a complete description.

IST1377I LIST ENTRIES *current_entries maximum_ entries percent*

Explanation: This message is part of a group of messages VTAM issues in response to a DISPLAY STATS,TYPE=CFS command. The first message in the group is IST1370I. See the explanation of that message for a complete description.

IST1378I *command* **FAILED FOR** *name* **– GENERIC RESOURCE NAME EXISTS**

Explanation: VTAM issues this message when *command* failed because the value specified for ID is already known to this node as a generic resource name. USERVARs and generic resource names cannot have the same name.

command is always **F USERVAR**.

name is the name specified for ID that is also a generic resource name.

System Action: VTAM rejects the command.

Operator Response: Reenter the command with a different USERVAR name specified on ID.

Programmer Response: None.

IST1380I DISCONNECTING FROM STRUCTURE *structure*

Explanation: VTAM issues this message when it is disconnecting from the coupling facility structure for the following reasons:

- VTAM termination
- VTAM private storage insufficient
- VTAM coupling facility structure storage insufficient
- VTAM lost connectivity to the structure and was unable to rebuild to a new structure.

If the reason is insufficient storage, this message is the first of a group of messages. A description of the message group follows.

```
IST1380I   DISCONNECTING FROM STRUCTURE structure
IST1119I   FAILURE REASON IS INSUFFICIENT STORAGE
IST314I    END
```

structure is the name of the coupling facility structure.

System Action: If IST1119I is displayed, no attempt will be made by the system to reconnect to the coupling facility structure. Otherwise, VTAM disconnects and waits for a change in coupling facility resources.

Operator Response: If IST1119I is displayed, do the following:

1. Enter the DISPLAY BFRUSE command to display storage used by VTAM buffer pools and information about the common storage area. Total VTAM private storage information is also displayed.
2. Enter the DISPLAY STORUSE command to display storage usage for storage pools.
3. Save the system log and request a dump for problem determination.

If IST1119I is not displayed and VTAM is not halting, do the following:

1. Use the D XCF,CF MVS command to determine this system's connectivity to the coupling facility containing the structure. See *z/OS MVS System Commands* . for a description of the D XCF command.
2. If the system is connected to the coupling facility, issue D NET,STATS,TYPE=CFS and determine if there is a structure shortage. Message IST1439I will also be displayed if there is a structure shortage.

Programmer Response:

If IST1119I is displayed, increase storage as required. You will have to restart VTAM to reconnect to the coupling facility structure.

See the *z/OS Communications Server: SNA Operation* and the*z/OS Communications Server: SNA Diagnosis Vol 1, Techniques and Procedures* for more information on storage-related problems.

If VTAM disconnected because the system is not connected to the coupling facility, reestablish connectivity to the coupling facility.

If VTAM disconnected because of a structure shortage, correct the structure shortage problem. See *z/OS Communications Server: SNA Network Implementation Guide* for information on how to correct the structure shortage problem.

IST1381I REBUILD STARTED FOR STRUCTURE *structure*

Explanation: VTAM issues this message when a rebuild has been initiated for the coupling facility structure.

structure is the name of the coupling facility structure.

System Action: Processing continues.

Operator Response: None.

Programmer Response: None

IST1382I REBUILD HAS BEEN STOPPED FOR STRUCTURE *structure*

Explanation: VTAM issues this message to indicate that a rebuild has been stopped before it could complete. There are two reasons a rebuild will be stopped:

- The operator entered the MVS SETXCF STOP,REBUILD command.
- VTAM has determined that there is an insufficient number of connectors to the new structure to continue.
- A connector to the original structure may have a failed persistent connection and a connection may remain failed persistent if all affinities are not deleted.

structure is the name of the coupling facility structure.

System Action: VTAM continues to use the old structure. Processing continues.

Operator Response: If SETXCF STOP,REBUILD was not entered, save the system log for problem determination.

If the rebuild is stopped because of a failed persistent connection either reestablish the failed connection and allow the responsible application to purge the affinities or enter the MVS SETXCF FORCE, CONNECTION, CONNAME=conname, STRNAME=structure name command to force the failed persistent connection away.

Programmer Response: If the operator did not enter the SETXCF STOP,REBUILD command, make sure all nodes in the sysplex have connectivity to the coupling facilities defined in the active coupling facility policy. A rebuild may be retried using the SETXCF START,REBUILD command.

IST1383I REBUILD COMPLETE FOR STRUCTURE *structure*

Explanation: VTAM issues this message to indicate that a rebuild has been completed.

structure is the name of the coupling facility structure that has been rebuilt.

System Action: VTAM begins using the new structure. Processing continues.

Operator Response: None

Programmer Response: None.

IST1385I ADJCLUST INFORMATION WAS IGNORED DUE TO INSUFFICIENT STORAGE

Explanation: VTAM issues this message when a border node receives adjacent cluster information, but insufficient storage was available to store the information. This is a private storage problem.

System Action: Adjacent cluster routing will proceed as if the information had not been received.

Operator Response:

Enter the DISPLAY BFRUSE command. Message IST981I displays total VTAM private storage information.

Enter the DISPLAY STORUSE command to display storage usage for storage pools.

Save the system log and request a console dump for problem determination.

Programmer Response: Increase storage as required. See the *z/OS Communications Server: SNA Operation* and the *z/OS Communications Server: SNA Diagnosis Vol 1, Techniques and Procedures* for more information on storage-related problems.

IST1386I DYNAMIC ALLOCATION FAILED FOR *device_address* **CODE =** *return_code* **REASON =** *reason_code*

Explanation: VTAM issues this message in response to a VARY ACT command for a channel-attached major node.

device_address is the hexadecimal address of the link station that failed.

return_code is the return code received from dynamic allocation SVC 99 and indicates the contents of Register 15.

reason_code is the reason code in the parameter list and provides information about the cause of the failure.

System Action: VTAM deactivates the link station *device_address*.

Operator Response:

- Verify that *device_address* is correct. Then, attempt to activate the link station again.
- If the command continues to fail, save the system log for problem determination.

Programmer Response: Use the output provided and the explanation of *return_code* and *reason_code* to assist you in correcting the problem.

See the *z/OS MVS Programming: Authorized Assembler Services Guide* for a description of *return_code* and *reason_code*.

- If **REASON = 0214**, this indicates that the unit is not available because the device is already allocated.
- If **REASON = 0238**, this indicates that space is not available in the task input/output table (TIOT). Increase the size of the TIOT table.

If you cannot determine the reason for the failure, contact the IBM Software Support Center.

IST1387I TCP PU *puname* **IS UNABLE TO ACCEPT CONNECTION REQUESTS**

Explanation: VTAM issues this message group when VTAM is unable to receive session requests from LU partners in the TCP/IP network. This occurs when VTAM is unable to establish a listener socket or when an error occurs when processing a connection request from the TCP/IP network. VTAM is still able to initiate and accept session activations with partners in the TCP/IP network. Existing sessions are unaffected. The second message in the message group describes the specific failure that occurred. Possible message groups follow:

```
IST1387I   TCP PU puname IS UNABLE TO ACCEPT CONNECTION REQUESTS
IST1388I   SOCKET callname CALL FAILED, TCP ERROR NUMBER = errno
IST314I    END

IST1387I   TCP PU puname IS UNABLE TO ACCEPT CONNECTION REQUESTS
IST1389I   NO TCB IS AVAILABLE FOR SOCKET
IST314I    END

IST1387I   TCP PU puname IS UNABLE TO ACCEPT CONNECTION REQUESTS
IST1390I   NO SOCKET DESCRIPTOR IS AVAILABLE
IST314I    END
```

IST1387I

puname is the name of the TCP physical unit.

IST1388I

callname is the name of the SOCKET API call which has failed. Possible values are:

ACCEPT

BIND

CLOSE
LISTEN
SELECT
SETSOCKOPT
SOCKET

errno is the TCP error number value returned from the SOCKET API call when the return code indicates an error.

System Action: VTAM continues to process existing sessions and continues to attempt session initiations to partners in the TCP/IP network.

Operator Response: Dump VTAM and save the system log for problem determination. The dump will contain the VTAM internal trace.

Deactivating and reactivating the TCP PU may correct the problem, however existing sessions will be disrupted.

Programmer Response: If the TCP major node does not need to receive session requests from the TCP/IP network, no action is necessary. However, if session requests are desired, the programmer response is determined by the second message in the group:

IST1388I

Refer to the *z/OS Communications Server: IP Programmer's Reference* with the *callname* and *errno* to determine the reason why TCP/IP is rejecting the SOCKET API call. The SOCKET API calls issued by VTAM and their return codes are also recorded with VIT entries in the TCP VTAM internal trace. If you cannot determine from *callname* and *errno* why the SOCKET API call failed, examine the VIT entries to obtain more detail on the failure. After the problem is corrected, you must deactivate and reactivate the TCP PU. However, existing sessions will be disrupted.

IST1389I

VTAM is unable to assign a socket to one of the task control blocks (TCBs) allocated to the TCP major node. Correct the problem by increasing the TCB parameter of the TCP major node definition. Deactivate and reactivate the TCP major node to use the new definition. Existing sessions will be disrupted.

IST1390I

VTAM has more session activations in progress than the maximum allowed by TCP/IP. The TCP PU can be deactivated and reactivated to correct this problem. However, existing sessions will be disrupted.

IST1388I SOCKET *callname* **CALL FAILED, TCP ERROR NUMBER =** *errno*

Explanation: VTAM issues this message for the following situations:

- As a single message, when TCP/IP rejects a SOCKET API call. The TCP PU is still able to accept TCP/IP connection requests.
- As part of a group of messages when an error occurs on the TCP PU that prevents it from accepting TCP/IP connection requests. The first message in the group is IST1387I. See the description of that message for more information about the message group.

When this message is displayed, VTAM is still able to initiate and accept session activations with partners in the TCP/IP network. Existing sessions are not affected.

callname is the name of the SOCKET API call which has failed. Possible values are:

ACCEPT
CLOSE
SELECT
SOCKET

errno is the TCP error number value returned from the SOCKET API call when the return code indicates an error.

System Action: VTAM continues to process existing sessions and continues to process session initiations to and from partners in the TCP/IP network.

Operator Response: Dump VTAM and save the system log for problem determination. The dump will contain the VTAM internal trace.

Deactivating and reactivating the TCP PU can correct the problem. However, existing sessions will be disrupted.

Programmer Response: Refer to the *z/OS Communications Server: IP Programmer's Reference* with the *callname* and *errno* to determine the reason why TCP/IP is rejecting the SOCKET API call. The SOCKET API calls issued by VTAM and their return codes are also recorded with VIT entries in the TCP VTAM internal trace. If you cannot determine from *callname* and *errno* why the SOCKET API call failed, examine the VIT entries to obtain more detail on the failure. After the problem is corrected, you must deactivate and reactivate the TCP PU. However, existing sessions will be disrupted.

IST1389I NO TCB IS AVAILABLE FOR SOCKET

Explanation: VTAM issues this message as part of a group of messages when an error occurs on the TCP PU that prevents it from accepting TCP/IP connection requests. VTAM is still able to initiate session activations to partners in the TCP/IP network. Existing sessions are unaffected. The first message in the group is IST1387I. See the description of that message for more information.

IST1390I NO SOCKET DESCRIPTOR IS AVAILABLE

Explanation: VTAM issues this message as part of a group of messages when an error occurs on the TCP PU that prevents it from accepting TCP/IP connection requests. VTAM is still able to initiate session activations to partners in the TCP/IP network. Existing sessions are unaffected. The first message in the group is IST1387I. See the description of that message for more information.

IST1391I DELAYED DISCONNECT OF *puname* FAILED DUE TO ABEND

Explanation: VTAM issues this message when there is an abnormal termination while attempting a delayed disconnection of a physical unit that is defined as DISCNT=DELAY. Messages IST413I, IST416I or IST931I are issued if the abnormal termination produced a dump and the system dump data set is usable at this time.

puname is the name of the physical unit which was not disconnected.

System Action: The attempt to disconnect the physical unit is discontinued but other processing continues.

Operator Response: Save the dump and the system log for problem determination.

If you want to disconnect this PU, enter a VARY INACT, TYPE=FORCE command for *puname*.

Programmer Response: Review the dump of the abnormal termination, if available, and console log for problem determination.

IST1392I DISCNTIM = *seconds* DEFINED AT *source* FOR DISCONNECT

Explanation: This message is part of a subgroup of messages that VTAM issues in response to a DISPLAY ID command. It is issued if the physical unit is defined as DISCNT= DELAY. A full description of the message subgroup follows:

```
IST075I   NAME = nodename, TYPE = nodetype
IST1392I  DISCNTIM = seconds DEFINED AT source FOR DISCONNECT
```

IST075I

nodename is the name of the resource or ID type that is displayed.

See Chapter 15, "Node and ID types in VTAM messages" on page 697 for a description of *nodetype*.

IST1392I

seconds indicates the value, in seconds, defined for DISCNTIM. DISCNTIM defines the length of time VTAM will delay disconnection of the PU after the last LU-LU session is terminated.

source indicates the source of the DISCNTIM definition. Values can be:

PU The time of delay was specified in the PU definition. It can be changed using the MODIFY RESOURCE or MODIFY DEFAULTS command with the DISCNTIM keyword.

HOST
The time of delay was specified in the host at VTAM start time in the DISCNTIM start option or by allowing it to default. It can be changed by using the MODIFY VTAMOPTS command with the DISCNTIM keyword.

System Action: Processing continues.

Operator Response: None.

Programmer Response: None.

IST1393I GENERIC RESOURCE NAME RESOLUTION EXIT IS *exit_name*

Explanation: VTAM issues this message as part of a group of messages in response to a DISPLAY ID=*generic_name* command. See the explanation of IST1359I for a complete description of the message group.

IST1394I CPNAME = *cpname* **STATION ID =** *stationid*

Explanation: VTAM issues this message as part of a group of messages in the following situations:

- When a connection request for resource *nodename* in message IST680I has been rejected. Either message IST081I or IST352I follows this message with more information on resources.
- When a connection request for resource *puname* in message IST1452I has been successful.

See the description of IST680I for more information.

IST1395I FLDTAB = *fldname* **FILTER =** *filtername*

Explanation: VTAM issues this message as part of a subgroup of messages in response to a DISPLAY ID=ISTNOP command. Message IST977I is the first message in the subgroup. See the description of that message for more information.

IST1396I DISK I/O INITIALIZATION FAILED FOR CMIP SERVICES

Explanation: VTAM issues this message when when the OSIMGMT=YES start option or the MODIFY VTAMOPTS command has been specified and one of the following error occurs:

- Physical disk I/O failed or data that was not valid was read during VTAM CMIP services initialization.
- CMIP services is recovering from an abend that occurred while processing datasets.
- The directory definition file might be incorrect. If this is the case, message IST1444I is also issued.

System Action: Processing continues. VTAM CMIP services is inactive.

Operator Response: To restart CMIP services, issue the MODIFY VTAMOPTS, OSIMGMT=YES command.

Programmer Response: The ASN.1 or GDMO files might not have been loaded correctly from the installation tape. Reinstall these files before restarting VTAM CMIP services.

If reloading the files from tape is unsuccessful, collect documentation for IBM service to use.

If message IST1444I is issued, see the programmer response for that message.

IST13971 INITIALIZATION FAILED FOR CMIP SERVICES

Explanation: VTAM issues this message when a subcomponent of VTAM CMIP services failed to initialize.

System Action: Processing continues. VTAM CMIP services is inactive.

Operator Response: Collect the system log and request a dump for problem determination. To restart CMIP services, issue the MODIFY VTAMOPTS, OSIMGMT=YES command. If the VIT trace was active, VIT records can be used to determine the cause.

Programmer Response: Verify that the operator entered the buffer pool or CSA start options as specified in the start procedures.

Increase storage as required. For insufficient storage errors, you might want to redefine your buffer pool or CSA limits. If the start option cannot be modified using the MODIFY VTAMOPTS command, you must modify the VTAM start options file (ATCSTRxx) and restart VTAM to use the new start option.

- See the *z/OS Communications Server: SNA Migration* to determine the storage requirements for VTAM.
- See the *z/OS Communications Server: SNA Resource Definition Reference* for a description of VTAM start options.
- See the *z/OS Communications Server: SNA Operation* for information about the DISPLAY BFRUSE Command, the DISPLAY STORUSE Command, and the MODIFY VTAMOPTS Command.
- See the *z/OS Communications Server: SNA Network Implementation Guide* for an explanation and description of buffer pools and for general information on buffer pool specification and allocation.
- See the *z/OS Communications Server: SNA Diagnosis Vol 2, FFST Dumps and the VIT* for information about analyzing dumps and about analyzing storage using the VIT analysis tool, if external trace is active.

IST1398I ALL ATTEMPTS TO RESTART CMIP SERVICES WERE UNSUCCESSFUL

Explanation: VTAM issues this message when CMIP services attempted to restart but was unsuccessful.

CMIP services did not restart after an ABEND because of the frequency of ABENDs. If CMIP services is experiencing frequent ABENDs, it no longer restarts automatically. You must specify OSIMGMT=YES on the MODIFY VTAMOPTS command to restart CMIP services.

System Action: Processing continues. VTAM CMIP services is inactive. Data might have been lost.

Operator Response: Collect the system log and request a dump for problem determination. To restart CMIP services, issue the MODIFY VTAMOPTS, OSIMGMT=YES command. If the VIT trace was active, VIT records can be used to determine the cause.

Programmer Response: Verify that the operator entered the buffer pool or CSA start options as specified in the start procedures.

Increase storage as required. For insufficient storage errors, you might want to redefine your buffer pool or CSA limits. If the start option cannot be modified using the MODIFY VTAMOPTS command, you must modify the VTAM start options file (ATCSTRxx) and restart VTAM to use the new start option.

- See the *z/OS Communications Server: SNA Migration* to determine the storage requirements for VTAM.
- See the *z/OS Communications Server: SNA Resource Definition Reference* for a description of VTAM start options.
- See the *z/OS Communications Server: SNA Operation* for information about the DISPLAY BFRUSE Command, the DISPLAY STORUSE Command, and the MODIFY VTAMOPTS Command.
- See the *z/OS Communications Server: SNA Network Implementation Guide* for an explanation and description of buffer pools and for general information on buffer pool specification and allocation.
- See the *z/OS Communications Server: SNA Diagnosis Vol 2, FFST Dumps and the VIT* for information about analyzing dumps and about analyzing storage using the VIT analysis tool, if external trace is active.

IST1399I ATTEMPTING TO RESTART CMIP SERVICES

Explanation: VTAM issues this message when a subcomponent of VTAM CMIP services has abended, and VTAM is attempting to restart CMIP services.

System Action: Processing continues. VTAM CMIP services is inactive.

Operator Response: None.

Programmer Response: None.

IST1400I DGTIMER = *dgtimer* **EXTIMER =** *extimer*

Explanation: VTAM issues this message as part of a group of messages in response to a DISPLAY ID command for a TCP/IP major node. The first message in the group is IST1342I. See the description of that message for more information.

IST1401I RESOURCE NOT FOUND-RETRY IN *time* **SEC(S) OR** *number* **REQUEST(S)**

Explanation: VTAM issues this message as part of a message group in response to a DISPLAY ID or DISPLAY DIRECTRY command.

VTAM issues this message when the SRCHRED start option is ON, and the resource being displayed represents a search reduction entry. Searches will be limited for this resource as indicated by the *time* and *number* fields. See the *z/OS Communications Server: SNA Network Implementation Guide* for more information on the processing of a search reduction entry.

time is the remaining number of seconds that VTAM will limit searches for the resource it previously was unable to locate. Once the specified number of seconds expire, subsequent searches for the resource will not be limited.

number indicates the amount of requests necessary before VTAM will search for the resource with no search reduction limitations.

- If **NEXT** is displayed, VTAM will not limit the next search request for the resource.
- Otherwise, VTAM will limit the search until *number* requests have been received. For example, if *number* is **2**, VTAM will limit the first request received, but will not limit the second request received.

A value of ***NA*** for *time* or *number* means **Not Applicable**. This value will appear when the timer or counter has been set to 0.

The SRTIMER and SRCOUNT threshold values being used for this resource are displayed in message IST1402I.

For more information on the SRCHRED, SRCOUNT, and SRTIMER start options, see the *z/OS Communications Server: SNA Resource Definition Reference*.

IST1402I SRTIMER = *srtimer* **SRCOUNT =** *srcount*

Explanation: VTAM issues this message as part of a message group in response to a DISPLAY ID or DISPLAY DIRECTRY command.

VTAM issues this message when the SRCHRED start option is ON. The SRCOUNT and SRTIMER values that are being used for the displayed resource are shown.

srtimer is the amount of time in seconds that VTAM will limit searching for a resource that it previously was unable to locate.

srcount is the number of requests that VTAM limit searching for the resource that it was previously unable to locate.

For more information on the SRCHRED, SRCOUNT, and SRTIMER start options, see the *z/OS Communications Server: SNA Resource Definition Reference*. You can change the value of start options with the MODIFY VTAMOPTS. See the *z/OS Communications Server: SNA Operation* for more information on that command.

The values of SRTIMER and SRCOUNT can be modified with the MODIFY RESOURCE command. See the *z/OS Communications Server: SNA Operation* for more information.

The values of SRTIMER and SRCOUNT may also be specified for a specific resource through the CDRSC and GROUP definition statements in a CDRSC major node. See the *z/OS Communications Server: SNA Resource Definition Reference* for more information.

IST1403I MODIFY QUERY REPLY FROM *ncpname*

Explanation: This message is the first in a group of messages that VTAM issues when a reply is received in response to a MODIFY QUERY command. A complete description of the message group follows.

```
 IST1403I  MODIFY QUERY REPLY FROM ncpname
 IST1404I  id data

⋮
[IST1405I     data]

⋮
 IST314I   END
```

IST1403I

ncpname is the name of the NCP that was specified on the ID operand of the MODIFY QUERY command.

IST1404I

id is the subfield ID of the vector specified on the command.

data is the information that was requested from *ncpname*.

IST1405I

This message is used to display overflow *data* from IST1404I.

System Action: Processing continues.

Operator Response: None.

Programmer Response: None.

IST1404I *id data*

Explanation: VTAM issues this message as part of a group of messages. The first message in the group is IST1403I. See the explanation of that message for a complete description.

IST1405I *data*

Explanation: VTAM issues this message as part of a group of messages. The first message in the group is either IST1282I or IST1403I. See the explanation of those messages for a complete description.

IST1406I **CONTIMER =** *contimer* **IATIMER =** *iatimer*

Explanation: VTAM issues this message as part of a group of messages in response to a DISPLAY ID command for a TCP/IP major node. The first message in the group is IST1342I. See the description of that message for more information.

IST1407I *instance_name* **IS A MULTIPLE INSTANCE OF EXIT** *exitname*

Explanation: VTAM issues this message as part of a message group to indicate that *instance_name* is a multiple exit of exit routine *exitname*. The first message in the group is IST1183I. See the description of that message for more information.

IST1408I **MODIFY TGP NOT APPLICABLE FOR** *resource_type resource_name*

Explanation: VTAM issues this message when a MODIFY TGP command fails because both of the following conditions exist:

- The PU used in the connection was created dynamically.
- The topology reporting status for the connection is one of the following when the DISPLAY ADJCP command is issued:

  AC/N Active, but not reported to APPN topology and routing services.

  AO/N Active with override but not reported to APPN topology and routing services.

  AQ/N Quiesced, but not reported to APPN topology and routing services.

  IN/N Inactive, but not reported to APPN topology and routing services.

  NEV Never reported to APPN topology and routing services.

resource_type indicates the type of resource and can be either **CP** or **PU**.

resource_name is the name of the resource.

- If *resource_type* is **CP**, then *resource_name* is the resource identified by the adjacent control point that is coded on the ID operand and the transmission group number that is coded on the TGN operand of MODIFY TGP.
- If *resource_type* is **PU**, then *resource_name* is the dynamic PU name that is specified on the ID operand of MODIFY TGP.

For more information about the MODIFY TGP command, see the *z/OS Communications Server: SNA Operation*.

System Action: Processing continues.

Operator Response: Issue a DISPLAY ADJCP command to check the status for the connection. For more information about the DISPLAY ADJCP command, see the *z/OS Communications Server: SNA Operation*.

Programmer Response: None.

IST1409I *luname* **ASSOC =** *associatedlu* **ETYPE =** *entrytype*

Explanation: This message is part of a group of messages that VTAM issues in response to a DISPLAY LMTBL,TYPE=LUNAME,SCOPE=ALL command. See the explanation of message IST1006I for a complete description of the message group.

IST1410I **QUERY** *status resource*

Explanation: VTAM issues this message to report the status of a MODIFY QUERY command.

resource is the target of the query.

status is the status of this command and can be one of the following:

SENT TO
This command or series of commands has been sent to *resource* as specified on the MODIFY QUERY command.

QUEUED FOR
This command is part of a series of MODIFY QUERY commands. It will be queued for *resource* until the complete series is received.

RESET FOR
This series of commands queued for *resource* will be purged. This occurs when the program operator application (POA) specified CONTINUE=RESET on the MODIFY QUERY command or when an error occurs in processing the command.

System Action: The action taken by VTAM depends on the *status* reported:

- If *status* is **RESET FOR**, the series of MODIFY QUERY commands for this *resource* will be purged by VTAM.
- If *status* is **SENT TO**, this command or series of commands will be sent to the *resource*.
- If *status* is **QUEUED FOR**, this command will be queued for *resource* until all commands in the series have been received.

Operator Response: None.

Programmer Response: None.

IST1411I **INOP GENERATED FOR** *resourcename*

Explanation: This message is the first in a group of messages that VTAM issues when an error condition has been detected for external communications adapter (XCA) node *resourcename*.

Possible message groups follow.

- If the XCA resource is for a local area network (LAN), and the LAN operation has been identified, VTAM issues the following messages:

```
IST1411I  INOP GENERATED FOR resourcename
IST1412I  lan_operation action – RETURN CODE return_code
IST314I   END
```

- If the XCA resource is for a local area network (LAN) and the LAN operation is not identified, or if the XCA resource is for an Asynchronous Transfer Mode (ATM) or an Enterprise Extender (HPR/IP) resource, VTAM issues the following messages:

```
IST1411I  INOP GENERATED FOR resourcename
IST1430I  REASON FOR INOP IS reason
IST314I   END
```

IST1411I
resourcename is the name of the XCA resource where the INOP condition occurred.

IST1412I

lan_operation is the name of the LAN operation that failed. This name is used by the IBM Software Support Center if additional problem determination assistance is needed.

action is one of the following:

FAILED
lan_operation is a LAN operation for which a negative response was returned.

RECEIVED
lan_operation is a LAN operation that was received and reported a change in connectivity.

return_code, if displayed, is a 4-digit hexadecimal code issued by *resourcename* and provides information about the cause of the problem. See *z/OS Communications Server: IP and SNA Codes* for a description of *return_code*. If no return code is available, ***NA*** is displayed. This code is used by the IBM Software Support Center if additional problem determination assistance is needed.

IST1430I

reason is one of the following:

APPN CONNECTION ENDED BY ACTIVATION XID
An APPN connection across an ATM network is being terminated because a new activation XID request has been received over a connection that has already been established.

APPN CONNECTION ENDED DUE TO INACTIVITY
An APPN connection over an ATM switched virtual circuit (SVC) is being terminated because no HPR session traffic has been detected for the DISCNT time period specified on the PU statement representing this connection.

APPN CONNECTION FAILED – LIVENESS TIMEOUT
An APPN connection is being terminated over an ATM PVC. The remote end of the PVC is not responding to liveness messages.

APPN CONNECTION FAILED – STORAGE FAILURE
An APPN connection across an ATM network is being terminated because a storage failure occurred during connection establishment or liveness processing.

INBOUND PIU COULD NOT BE ROUTED
Possible causes for the INOP include:

- An ABEND occurred while processing the PIU. Message IST1037I is also issued and provides additional information.
- A PIU segment was received out of sequence.
- A PIU was lost. A segment was received that did not complete a PIU before the start of a new PIU.
- The segment size was too large. An inbound PIU was received and the segment size exceeded the maximum frame size or the maximum PIU size.
- The PIU was not valid for one of the following reasons:
  - The PIU was not a FID4.
  - The inner PIU was not a FID0 or FID2.
  - The PIU length is too short to include an RH on a VR pacing response.
  - The data count field in the PIU exceeded the PIU size.

Note: If the INOPDUMP start option is ON, then an SVC dump was requested by ISTTSCPD.

IP ADDRESS *ipaddress* **IS NOT A VIPA**
The local IP address *ipaddress* is a valid address, but is not a virtual IP address (VIPA).

IP ADDRESS *ipaddress* **IS NOT VALID**
The local IP address *ipaddress* is no longer valid.

LDLC COMMAND ERROR
An LDLC command was received that is not recognized or was received out of order for an APPN connection across an ATM network.

MACADDR OR SAPADDR IN USE
The remote MACADDR or SAPADDR for this connection duplicates a remote MACADDR or SAPADDR that is in use.

TCP/IP JOB *jobname* **IS NOT AVAILABLE**
The TCP/IP job *jobname* is no longer available.

TIMEOUT OCCURRED – PORT TIMER EXPIRED
The time period specified on the PORT definition statement of the XCA major node expired, and no response to a request had been received.

UNRECOGNIZED OPERATION
The reason for the INOP could not be determined by the module issuing this message group.

XID ERROR
An XID received during the establishment of an APPN connection across an ATM network contained an error.

XID OR LDLC COMMAND TIMEOUT
An XID or LDLC COMMAND to establish an APPN connection across an ATM or Enterprise Extender (HPR\IP) network did not receive a response after transmission and multiple retries.

System Action: Error recovery will be attempted for *resourcename*, and subsequent VTAM messages will indicate the results of the error recovery. Processing continues.

Operator Response: Enter a DISPLAY ID=*resourcename*,SCOPE=ALL command to determine the status of the resource. Save the system log for problem determination. Also:

- If *reason* is **XID OR LDLC COMMAND TIMEOUT**, re-attempt the activation of the APPN connection.
- If *reason* is **TCP/IP JOB** *jobname* **IS NOT AVAILABLE**, issue the DISPLAY TCPIP command, which lists each TCP/IP job and its version. See *z/OS Communications Server: IP User's Guide and Commands* for a complete description of the DISPLAY TCPIP command.

Programmer Response:

- If message IST1412I is issued, use the system log and the description of *return_code* to assist you in correcting the problem.

  If *lan_operation* is **CLOSE_STATION_INDICATION**, *action* is **RECEIVED**, and *return_code* is ***NA***, VTAM has been informed that the station, previously opened or in the process of being opened, has closed.
- If message IST1430I is issued, the value of *reason* determines the actions to be taken:

  APPN CONNECTION ENDED BY ACTIVATION XID
  An effort to activate a new APPN connection has been received over an already active connection. The existing APPN connection and ATM SVC or PVC will be terminated and automatically restarted. When the new APPN connection attempt is retried, the SVC or PVC should be re-established.

  APPN CONNECTION ENDED DUE TO INACTIVITY
  No HPR traffic has been detected for the DISCNT time period specified on the PU statement representing this connection. The ATM switched virtual circuit (SVC) will be terminated. This is a normal condition when session traffic has ceased to use this connection. The next session request will cause activation of another ATM SVC.

  APPN CONNECTION FAILED – LIVENESS TIMEOUT
  An APPN connection is being terminated over an ATM PVC because the remote end of the PVC is not responding to liveness messages. The PVC and the APPN connection over it will be terminated and automatically restarted. If no response is then received, the APPN connection will remain open pending activation of the PVC from the remote node.

  APPN CONNECTION FAILED – STORAGE FAILURE
  During APPN connection establishment, either an XID or an LDLC COMMAND could not be transmitted to the remote node because no storage was available. The APPN connection and the ATM SVC or PVC will be terminated. When the storage failure condition is relieved, this connection can be retried.

  INBOUND PIU COULD NOT BE ROUTED
  - An ABEND occurred while processing the PIU. Refer to message IST1037I for recommended actions.
  - A PIU was received out of sequence.

    The TG sequence number in the FID4 TH of the inbound PIU did not match the next sequence number that VTAM expected to receive. If VTAM internal trace was running, then PIU discard trace entries were written.

Look for a DSCD entry that contains discard reason code 0001 and a module ID in the DSC2 trace record of LS6I. See *z/OS Communications Server: SNA Diagnosis Vol 1, Techniques and Procedures* for the format and content of the DSCD and DSC2 trace entries.

– A PIU was lost.

  A segment was received that did not complete a PIU before the start of a new PIU. If VTAM internal trace was running, then PIU discard trace entries were written. Look for DSCD entries that contain discard reason codes 0001 and 0004 and the module ID in the trace record of LS6Z. See *z/OS Communications Server: SNA Diagnosis Vol 1, Techniques and Procedures* for the format and content of the DSCD trace entry.

– The segment size was too large.

  An inbound PIU was received and the segment size exceeded the maximum frame size and the maximum PIU size. The maximum segment size for inbound PIUs is determined by the maximum PIU or frame size passed in the XID. If VTAM internal trace was running, then PIU discard trace entries were written. Look for DSCD entries that contain discard reason codes 0003 and 0004 and a module ID in the DSC2 trace record of LS6Z. See *z/OS Communications Server: SNA Diagnosis Vol 1, Techniques and Procedures* for the format and content of the DSCD and DSC2 trace entries.

– The PIU was not valid.

  If the INOPDUMP start option is ON, then an SVC DUMP was attempted by ISTTSCPD, whose name will appear in the title of the dump. Use the system log and dump to assist you in determining the reason for the INOP. See *z/OS Communications Server: SNA Resource Definition Reference* for more information on the INOPDUMP start option. If VTAM internal trace was running, then PIU discard trace entries were written. Look for a DSCD entry that contains discard reason code 0002 and a module ID in the DSC2 trace record of LS6I. See *z/OS Communications Server: SNA Diagnosis Vol 1, Techniques and Procedures* for the format and content of the DSCD and DSC2 trace entries.

IP ADDRESS *ipaddress* **IS NOT A VIPA**
The Enterprise Extender (HPR/IP) connection to TCP/IP was established, but due to a change in the local IP address, the connection cannot continue. The local IP address is a valid address, but is not a virtual IP address (VIPA). The local IP address can be supplied to VTAM using the VTAM start option IPADDR, which is modifiable using the MODIFY VTAMOPTS command. If the Enterprise Extender is active, a change in the IPADDR value will not be detected. The IPADDR value is used only when the Enterprise Extender is started. If the IPADDR option is not used, the preferred IP address is used. The local IP address must be a valid VIPA address in TCP/IP.

IP ADDRESS *ipaddress* **IS NOT VALID**
The Enterprise Extender (HPR/IP) connection to TCP/IP was established, but due to a change in the local IP address, the connection cannot continue. The local IP address is not a valid address. The local IP address can be supplied to VTAM using the VTAM start option IPADDR, which is modifiable using the MODIFY VTAMOPTS command. If the Enterprise Extender is active, a change in the IPADDR value will not be detected. The IPADDR value is used only when the Enterprise Extender is started. If the IPADDR option is not used, the preferred IP address is used. The local IP address must be a valid VIPA address in TCP/IP.

LDLC COMMAND ERROR
The XID Done LDLC command establishing the primary end of the connection was received before XID negotiation completed. The remote node did not properly complete XID negotiation.

MACADDR OR SAPADDR IN USE
Verify that the MACADDR and SAPADDR for this connection is a unique pair. See *z/OS Communications Server: SNA Resource Definition Reference* for additional information on specifying MACADDR and SAPADDR in the XCA major node.

TCP/IP JOB *jobname* **IS NOT AVAILABLE**
The Enterprise Extender (HPR/IP) connection to TCP/IP was established, but due to a change in the TCP/IP job to which VTAM was attached, the connection cannot continue. The TCP/IP job name can be supplied to VTAM using the VTAM start option TCPNAME, which is modifiable using the MODIFY VTAMOPTS command. If the Enterprise Extender is active, a change in the TCPNAME value will not be detected. The TCPNAME value is used only when the Enterprise Extender is started. If the TCPNAME option is not used, the Enterprise Extender selects any active TCP/IP job that is at a minimum OS/390 Version 2 Release 6.

TIMEOUT OCCURRED – PORT TIMER EXPIRED
Verify that the TIMER value on the PORT definition statement is high enough. See *z/OS Communications Server: SNA Resource Definition Reference* for additional information.

UNRECOGNIZED OPERATION
The reason for the INOP could not be determined. Contact the IBM support center.

XID ERROR
Either a non format 3 XID or an XID with an appended Control Vector 22 was received. If VTAM internal trace was running with the LCS option, then an LCSX trace entry will contain the XID in error sent from the remote end of the connection. The format of the XID or control vector 22 can be used to determine what part of the XID is not valid.

XID OR LDLC COMMAND TIMEOUT
During APPN connection establishment, either an XID or an LDLC COMMAND was sent to the remote node. No response was received. The XID or LDLC command was retransmitted multiple times without response.

ATM: The SVC or PVC is still active, but the remote node is not responding. The ATM SVC or PVC will be cleared to attempt to reset the error condition on the remote node.

Enterprise Extender (HPR\IP): Retry the connection by reissuing the dial. If failure persists, determine if the failure is a result of a system definition error or a network error. If the failure is a result of a system definition error, correct the error. If the failure is a result of a network error, contact the IP network provider.

IST1412I *lan_operation action* **– RETURN CODE** *return_code*

Explanation: This message is part of a group of messages. The first message in the group is IST1411I. See the explanation of that message for a complete description.

IST1413I *error_type* **– REDIAL ATTEMPTED FOR** *puname*

Explanation: VTAM issues this message if a redial for physical resource *puname* has been attempted.

error_type can be one of the following:

PROTOCOL VIOLATION
A CV X'51' was not found on the ACTPU response or REQACTPU for the first PU activated for this dependent LU requester.

SESSION OUTAGE
One of the CPSVRMGR sessions between VTAM and the dependent LU requester was terminated by methods other than a VARY INACT command.

TDU ERROR
A topology database update (TDU) error has occurred. The end node dependent LU requester attempted to register its topology with its network node server and has received a negative response.

puname is the name of the physical resource.

System Action: Redial is attempted. If the redial for *puname* completes successfully, message IST093I will be issued. If the redial does not complete successfully, message IST619I or IST1416I will be issued.

Operator Response: Save the system log for problem determination.

- When *error_type* is **PROTOCOL VIOLATION**, First Failure Support Technology (FFST) probe ISTCSC13 is triggered. For more information on this probe, see the *z/OS Communications Server: SNA Diagnosis Vol 2, FFST Dumps and the VIT*.
- When *error_type* is **SESSION OUTAGE**, a buffer contents trace can provide additional information. See the *z/OS Communications Server: SNA Diagnosis Vol 1, Techniques and Procedures* for more information.
- When *error_type* is **TDU ERROR**, First Failure Support Technology (FFST) probe ISTCSC14 is triggered. For more information on this probe, see the *z/OS Communications Server: SNA Diagnosis Vol 2, FFST Dumps and the VIT*.

Programmer Response:

- When *error_type* is **PROTOCOL VIOLATION**, locate the ACTPU response (if doing a VARY DIAL) or locate the REQACTPU (if doing DLUR-initiated CPSVRMGR pipe activation) for the first PU activated on this CPSVRMGR pipe. Verify that the RU is formatted correctly and that it contains all the required control vectors.
- When *error_type* is **SESSION OUTAGE**, verify that all links to the dependent LU requester (DLUR) are still available for use and that the DLUR is still active.

- When *error_type* is **TDU ERROR**, locate the failed TDU RU in the dump and verify that the RU is formatted correctly.

IST1414I *error_type* **– REDIAL NOT ATTEMPTED FOR** *puname*

Explanation: VTAM issues this message if a redial for physical resource *puname* will not be attempted.

error_type can be one of the following:

PROTOCOL VIOLATION
A CV51 was not found on the ACTPU response or REQACTPU for the first PU activated for this dependent LU requester.

SESSION OUTAGE
One of the CPSVRMGR sessions between VTAM and the dependent LU requester was terminated by methods other than a VARY INACT command.

TDU ERROR
A topology database update (TDU) error has occurred. The end node dependent LU requester attempted to register its topology with its network node server and has received a negative response.

puname is the name of the physical resource.

System Action: A redial for *puname* is not attempted.

Operator Response: Save the system log for problem determination.

- When *error_type* is **PROTOCOL VIOLATION**, First Failure Support Technology (FFST) probe ISTCSC13 is triggered. For more information on this probe, see the *z/OS Communications Server: SNA Diagnosis Vol 2, FFST Dumps and the VIT*.
- When *error_type* is **SESSION OUTAGE**, a buffer contents trace can provide additional information. See the *z/OS Communications Server: SNA Diagnosis Vol 1, Techniques and Procedures*.
- When *error_type* is **TDU ERROR**, First Failure Support Technology (FFST) probe ISTCSC14 is triggered. For more information on this probe, see the *z/OS Communications Server: SNA Diagnosis Vol 2, FFST Dumps and the VIT*.

Programmer Response:

- When *error_type* is **PROTOCOL VIOLATION**, locate the ACTPU response (if doing a VARY DIAL) or locate the REQACTPU (if doing DLUR-initiated CPSVRMGR pipe activation) for the first PU activated on this CPSVRMGR pipe. Verify that the RU is formatted correctly and that it contains all the required control vectors.
- When *error_type* is **SESSION OUTAGE**, verify that all links to the dependent LU requester (DLUR) are still available for use and that the DLUR is still active.
- When *error_type* is **TDU ERROR**, locate the failed TDU RU in the dump and verify that the RU is formatted correctly.

IST1415I *resource_name* **CONFLICTS WITH A GENERIC RESOURCE NAME**

Explanation: VTAM issues this message in response to a DISPLAY ID=*resource_name* command, when IDTYPE is specified and both of the following conditions exist:

- *resource_name* is both a generic name and a real resource.
- The value of IDTYPE= is not **GENERIC**.

System Action: VTAM displays information for the real resource name rather than the generic name. Processing continues.

If the generic resource resolution is suspended due to unavailability of the coupling facility (i.e., rebuild of the coupling facility is in progress), a dynamic CDRSC will be temporarily created to represent the generic resource. This message is generated for informational purposes only; it is not an error message.

Operator Response: To display generic name information, specify IDTYPE=GENERIC on the DISPLAY ID command.

Programmer Response: One of the duplicate names should be renamed. As long as the duplicate names exist, the real resource is blocked from having sessions with another resource. Also, searches will always find the generic name.

IST1416I ID = *nodename* FAILED — RECOVERY IN PROGRESS

Explanation: VTAM recognized a failure condition for node *nodename* and is attempting to recover the node. See subsequent messages for the results of that recovery attempt.

If the network where the node resides is known to VTAM, *nodename* is a network-qualified name in the form *netid.name*.

System Action: Users of *nodename* or devices attached to *nodename* may be notified of the failure. VTAM attempts to recover *nodename*.

Operator Response: Wait for additional messages indicating the success or failure of the recovery attempt.

Programmer Response: None.

IST1417I NETID NAME STATUS NODETYPE MAJNODE

Explanation: This message is the first in a group of messages that VTAM issues in response to a DISPLAY RSCLIST command. A complete description of the message group follows.

```
 IST350I   DISPLAY TYPE = RSCLIST
 IST1417I  NETID    NAME     STATUS     NODETYPE          MAJNODE
 IST1418I  netid    name     status     nodetype          majnode

⋮
[IST924I  ----------------------------------------------------]
[IST1203I VALUE resourcename FOR operand IS UNKNOWN RESOURCE ]
[IST924I  ----------------------------------------------------]
[IST1358I NO QUALIFYING MATCHES FOR id]
[IST924I  ----------------------------------------------------]
[IST1417I NETID    NAME     STATUS     NODETYPE          MAJNODE]
[IST1418I netid    name     status     nodetype          majnode]
 IST314I   END
```

IST350I

This message identifies the type of information in the display and is always RSCLIST for this message group.

IST1203I

This message is displayed when the value *resourcename* of *operand* is a resource that is syntactically correct but is not defined to VTAM.

resourcename is the name of the resource that is not defined to VTAM.

operand is the operand on the DISPLAY RSCLIST command.

IST1358I

This message is issued when there are no resource names found that match the wildcard name specified on the ID operand of the DISPLAY RSCLIST command and other restrictions identified by keywords on the command (for example: SCOPE, IDTYPE).

id is the name specified on the ID operand of the DISPLAY RSCLIST command.

IST1417I

This message is a header message for the information displayed in IST1418I.

IST1418I

IST1418I will occur as many times as is necessary to meet the specification of the ID keyword. If ID is a single value, IST1418I will occur once; if ID is a wildcard specification, IST1418I may occur multiple times.

If multiple values are specified for the ID keyword (for example: ID=(A,B*,C)), each grouping will be separated by IST924I.

netid is the network identifier of the resource being displayed.

name is the name of the resource being displayed. Only resources matching the pattern specified by the ID keyword will be displayed.

status is the current status of *name*. See "Resource Status Codes and Modifiers" for potential values.

nodetype is the resource type of the major or minor node. See ″Node and ID Types in VTAM Messages″ for a description of *nodetype*.

majnode is the name of the major node containing *netid.name*.

See the *z/OS Communications Server: SNA Operation* for more information.

System Action: Processing continues.

Operator Response: None.

Programmer Response: None.

IST1418I *netid name status nodetype majnode*

Explanation: This message is part of a group of messages. The first message in the group is IST1417I. See the explanation of that message for a full description.

IST1419I DUPLICATE SESSION INFORMATION REPORTED FOR *luname*

Explanation: This message is the first in a group of messages that VTAM issues after the completion of a VARY ACT command when a BFSESSINFO request unit (RU) is received during SSCP takeover processing. This message group indicates that VTAM now owns two type 2.1 link stations in the direction of the same logical unit *luname* for one or more of the sessions described by the BFSESSINFO RU. A complete description of the message group follows.

```
 IST1419I DUPLICATE SESSION INFORMATION REPORTED FOR luname
 IST1420I UNABLE TO ASSOCIATE THE FOLLOWING SESSION(S) WITH puname
 IST873I       PLU               SLU              SID        STATUS
 IST874I   netid.pluname    netid.sluname      sessionid     status
[IST874I  netid.pluname    netid.sluname      sessionid     status]
 IST314I  END
```

IST1419I

luname is the network-qualified name of the independent logical unit.

IST1420I

puname is the name of the type 2.1 link station (takeover physical unit) that is associated with the BFSESSINFO RU.

IST873I

This message is a header message for the information displayed in IST874I.

IST874I

pluname is the network-qualified primary session partner name.

sluname is the network-qualified secondary session partner name.

sessionid is the session identifier. For additional information on the session, enter a DISPLAY SESSIONS,SID=*sessionid* command.

status is the session status. See the *z/OS Communications Server: IP and SNA Codes* for a description of possible session initiation and termination states.

Status modifiers will not display in the *status* field of this message group. Enter a DISPLAY SESSIONS,SID=*sessionid* command to obtain this information.

System Action: Subsequent messages will be issued if errors are encountered while processing the BFSESSINFO RU. If no errors are encountered during BFSESSINFO RU processing, session states are not changed. However, certain session and problem determination information will not be available until the link that was taken over is given back to the original owning SSCP.

Operator Response: Save the system log for problem determination.

Since certain session and problem determination information will not be available until the link that was taken over is given back to the original owning SSCP, information such as *luname*, *puname*, and *sessionid*s of the affected sessions should be saved. This information may be useful if, for example, *puname* is about to be deactivated because system

information indicates that no logical units are currently using it.

Entering a DISPLAY command for *puname* may not show all of the logical units that are currently using the PU. Therefore, saving the information in this message group will enable you to DISPLAY specific logical units and/or sessions to determine whether the PU is currently in use.

Notes:

1. When a DISPLAY ID=*luname* command is entered with SCOPE=ALL, all sessions involving *luname* are displayed. Sessions that use type 2.1 adjacent link stations are displayed in groups, following message IST1081I indicating the adjacent link station (PU) being used for those sessions.

   However, sessions that were listed in the IST1419I message group during an SSCP takeover will not be displayed following message IST1081I for *puname* in message IST1420I.
2. When a DISPLAY ID=*puname* command is entered with SCOPE=ALL, a list of logical units that are currently using that PU are displayed following message IST355I.

   However, some of the logical units that are using *puname* may not be displayed, if the only sessions using *puname* are sessions that were displayed in the IST1419I message group during an SSCP takeover.

For an explanation of SSCP takeover, see the *z/OS Communications Server: SNA Network Implementation Guide*.

Programmer Response: None.

IST1420I UNABLE TO ASSOCIATE THE FOLLOWING SESSION(S) WITH *puname*

Explanation: This message is part of a group of messages that VTAM issues during SSCP takeover processing. The first message in the group is IST1419I. See the explanation of that message for a complete description.

IST1421I *nodetype resourcename* **HAS DUPLICATE ADDRESS**

Explanation:

This message is part of a message group. The first message in the group is either IST718I or IST1693I. See the explanation of those messages for a complete description.

IST1422I SAVED TRACE REQUESTS FOR *value*

Explanation: VTAM issues this message as part of a message group in response to a DISPLAY TRACES command. See the explanation of message IST1041I for a complete description of this message group.

IST1423I *rscname* **REJECTED BECAUSE DSPLYWLD =** *option*

Explanation: The *rscname* value for an ID keyword of a DISPLAY command included a wildcard specification (* or ?). Wildcards are not permitted on this DISPLAY command because the current value of the DSPLYWLD start option is *option*. Potential values for *option* are:

NOWILD
Wildcards are not permitted in any DISPLAY commands.

OPERONLY
Wildcards are permitted in DISPLAY commands from the network operator, but not from Program Operator Applications.

POAONLY
Wildcards are permitted in DISPLAY commands from Program Operator Applications, but not from the network operator.

System Action: Processing continues with the remaining ID keyword values in the DISPLAY command.

Operator Response: Use the MODIFY VTAMOPTS command to change the DSPLYWLD value and reissue the DISPLAY command.

Programmer Response: If wildcards should be permitted from either the network operator or Program Operator Applications, update the value of the DSPLYWLD start option in the VTAM start list (ATCSTRxx) to DSPLYWLD=FULLWILD.

IST1424I APPLICATIONS DEFINED USING THIS MODEL:

Explanation: VTAM issues this message as part of a subgroup in response to a DISPLAY ID command when the resource identified by ID is a model application program. A complete description of the message subgroup follows.

```
IST1424I  APPLICATIONS DEFINED USING THIS MODEL:
IST080I   nodename1 status1 nodename2 status2 nodename3 status3
⋮
```

IST080I

This message lists the dynamic application programs that have been defined using this model.

nodename is the name of the dynamic application program.

See the *z/OS Communications Server: IP and SNA Codes* for *status* information.

System Action: Processing continues.

Operator Response: None.

Programmer Response: None.

IST1425I DEFINED USING MODEL *model_name*

Explanation: VTAM issues this message in response to a DISPLAY ID command when the resource identified by ID is a dynamic application program. It identifies the model application program from which this dynamic application program was built.

System Action: Processing continues.

Operator Response: None.

Programmer Response: None.

IST1426I NO APPLICATIONS DEFINED USING THIS MODEL

Explanation: VTAM issues this message in response to a DISPLAY ID command when the resource identified by ID is a model application program and no dynamic application programs have been defined using this model.

System Action: Processing continues.

Operator Response: None.

Programmer Response: None.

IST1427I NAME = *resource_name* **FOUND TYPE =** *found_type*

Explanation: This message is part of a group of messages that VTAM issues in response to a DISPLAY DIRECTRY command when SCOPE=NSEARCH is specified. A complete description of the message group follows.

- If the resource name specified on the command is not found, the following message group is displayed.

```
IST350I  DISPLAY TYPE = NETWORK SEARCH
IST1427I NAME = resource_name  FOUND TYPE = found_type
IST314I  END
```

- If one instance of the resource name specified on the command is found, the following message group is displayed.

```
IST350I  DISPLAY TYPE = NETWORK SEARCH
IST1427I NAME = resource_name  FOUND TYPE = found_type
IST1184I CPNAME = cpname — NETSRVR = network_node_server
IST314I  END
```

- If duplicate instances of the resource name specified on the command are found, the following message group is displayed.

```
IST350I  DISPLAY TYPE = NETWORK SEARCH
IST1427I NAME = resource_name  FOUND TYPE = found_type
IST1184I CPNAME = cpname - NETSRVR = network_node_server
IST924I  ------------------------------------------------------------
IST1427I NAME = resource_name FOUND TYPE = found_type
IST1184I CPNAME = cpname - NETSRVR = network_node_server
```

```
⋮
IST314I  END
```

Following are some of the situations in which all instances of *resource_name* might not be returned.

- The resource is not registered to its network node server and the end node does not allow searching on a domain broadcast.
- A response is not returned within the time allotted for a Locate, as determined by the IOPURGE start option.
- Subarea searching is restricted due to the SSEARCH start option.
- The SNVC start option limit has been exceeded, preventing a border node from searching nonnative subnetworks.
- The search request is restricted by search reduction entries at nodes from which the command is **not** issued. Search reduction entries are ignored at the node from which the command is issued.
- An exit is restricting searches.
- Due to current network topology, the resource is unreachable via Locate flows (for example, an outage has occurred in the network).

IST350I

This message identifies the type of information in the display and is always **NETWORK SEARCH** for this message group.

IST1184I

cpname is the network-qualified name of the owning control point in the form *netid.name*.

network_node_server is the network-qualified name of the network node server in the form *netid.name*.

IST1427I

resource_name is the name of the resource specified on the command.

Note: If the resource specified is a generic resource name or USERVAR, the name can be translated by nodes from which the command is **not** issued. In this case, *resource_name* will be the actual network name of the resource rather than the name specified.

found_type is determined by the start options that are specified or defaulted. Possible values are:

NONE
The resource was not found.

OWNER
The resource was found, and this response is from the actual owner of the resource.

SURROGATE
The resource was found, and this response is from a node connected to the resource by a LEN connection and is providing network services for the resource.

WILDCARD
The resource was found, but is only used if other responses are not received. This response is returned by a node that has either:

- A generic definition for a connection to a network that might contain the target resource
- A backup resource definition for the specified resource. VTAM uses this for connectable application programs and inactive LUs.

Resources of *found_type* **OWNER** will be issued first, followed by *found_type* **SURROGATE** and *found_type* **WILDCARD**.

System Action: Processing continues.

Operator Response: None.

Programmer Response: None.

IST1430I REASON FOR INOP IS *reason*

Explanation: VTAM issues this message as part of a group of messages when an error condition has been detected for an External Communications Adapter (XCA) node. The first message in the group is IST1411I. See the description of that message for more information.

IST1431I APPN COS SUBAREA COS

Explanation: VTAM issues this message as part of a group of messages in response to a DISPLAY COSMAP command. See the explanation of IST1321I for a complete description of the group.

IST1432I DYNLU AND CDRSC VALUES FOR *cpname* **CONFLICT**

Explanation: VTAM issues this message when the value of the DYNLU operand or DYNLU start option does not match the value of the CDRSC operand on the CDRM definition statement. These values determine whether dynamic CDRSC definitions are allowed.

cpname is the network-qualified name of the adjacent control point in the form *netid.name*.

System Action: Even though session traffic may continue to flow, this conflict may result in intermittent session failures. Processing continues.

Operator Response: Save the system log for problem determination.

Programmer Response: To correct the conflict, ensure that the values for DYNLU and CDRSC match.

See the *z/OS Communications Server: SNA Resource Definition Reference* for a description of the DYNLU and CDRSC operands and the DYNLU start option.

IST1433I *rscname* **REJECTED - DSPLYWLD = NO FOR APPL** *applname*

Explanation: The *rscname* value for an ID keyword of a DISPLAY command issued by Program Operator Application *applname* included a wildcard specification (* or ?). Wildcards are not permitted on DISPLAY commands from *applname* because the application's definition statement specifies DSPLYWLD=NO.

System Action: Processing continues with the remaining ID keyword values in the DISPLAY command.

Operator Response: No action is required unless wildcards are to be permitted in DISPLAY commands from this application.

Programmer Response: If wildcards should be permitted, update the value of the DSPLYWLD keyword on the APPL definition statement for *applname* to DSPLYWLD=YES.

IST1434I DLUR ANS SUPPORT CONFLICT FOR PU *puname* **– SET TO ANS=STOP**

Explanation: VTAM issues this message when a dependent LU server PU has the ANS (Automatic Network Shutdown) keyword coded as CONT and the dependent LU requester (DLUR) is only capable of supporting ANS=STOP.

puname is the name of the dependent LU server PU.

System Action: VTAM changes the ANS value coded on the PU to the default (ANS=STOP).

Operator Response: Save the system log for problem determination.

Programmer Response: The DLUR being used with the DLUS does not have ANS=CONT support. To prevent the message from being issued, either allow ANS to default or code ANS=STOP for those DLUS PUs in the switched major nodes which have this DLUR coded for the DLURNAME parameter on the PU's PATH statement(s).

IST1435I LEVEL INPUT OUTPUT

Explanation: This message is part of a group of messages that VTAM issues in response to a DISPLAY STATS command when TYPE=COMPRESS is specified.

A complete description of the message group follows:

```
IST350I  DISPLAY TYPE = STATS,TYPE=COMPRESS
IST1435I LEVEL  INPUT                 OUTPUT
IST1176I                          BASIC    FROZEN
IST1177I   0    input             basic    **NA**
IST1177I   1    input             basic    **NA**
IST1177I   2    input             basic    frozen
IST1177I   3    input             basic    frozen
IST1177I   4    input             basic    frozen
IST314I  END
```

IST350I

This message identifies the type of information shown in the display. For this message group, type is always **STATS,TYPE=COMPRESS**.

IST1176I

This message is a header message for message IST1177I.

BASIC and FROZEN are OUTPUT values indicating the number of half-sessions using a given compression level for outgoing data.

For more information, see the description of message IST1177I.

IST1177I

This message is issued once for each possible data compression level.

level is **0, 1, 2, 3,** or **4**.

– Level **0** indicates that no data compression is used. This is the default compression level.

– Level **1** indicates that VTAM uses run length encoding (RLE) compression. This type of compression simply replaces strings of identical characters with one or two bytes, without using a compression dictionary.

– Levels **2, 3**, and **4** indicate that VTAM uses an adaptive compression algorithm. This type of compression replaces strings of data with codes of 9, 10, and 12 bits for levels 2, 3, and 4, respectively. Codes identify entries in dictionaries of data strings.

  In BASIC mode, which is always the initial mode, VTAM continuously updates the dictionaries so that they reflect the most recently compressed data.

  In FROZEN mode, VTAM stops updating (freezes) the dictionaries to speed up compression processing. In this mode, VTAM can take advantage of the ESA/390* data compression facility, if it is available on the CPU.

  Compression periodically switches from FROZEN mode to BASIC mode to resume updating of the dictionaries. It switches back to FROZEN when the dictionaries again reflect the most recently compressed data.

  See the *z/OS Communications Server: SNA Network Implementation Guide* for more information on the RLE and adaptive compression algorithms.

The **INPUT** value *input* represents the number of half-sessions using a given compression level for incoming data.

– When a session is established, *input* is incremented by one at the input compression level used by the corresponding half-session in this host.

– When a session ends, *input* is decremented by one at the input compression level used by the corresponding half-session in this host.

The **OUTPUT** values *basic* and *frozen* represent the number of half-sessions using a given compression level for outgoing data.

– When a session is established, *basic* is incremented by one at the output compression level used by the corresponding half-session in this host.

– Each time VTAM freezes the compression dictionaries for a half-session on output, *basic* for that half-session is decremented by one, and *frozen* at the same level is incremented by one.

  Each time VTAM resumes updating the compression dictionaries for a half-session on output, *frozen* for that half-session is decremented by one, and *basic* at the same level is incremented by one.

– When a session ends, *basic* or *frozen* (depending on the compression state at the time) is decremented by one at the output compression level used by the corresponding half-session in this host.

Note: A session with both half-sessions in the same host is prevented from using compression. Each of its two half-sessions is counted separately for **INPUT** and **OUTPUT** on level **0**.

IST1436I

IST1435I

This message serves as a header for message IST1177I.
- LEVEL indicates the data compression level.
- INPUT indicates the number of half-sessions (one end of a session) using a given compression level for incoming data.
- OUTPUT indicates the number of half-sessions using a given compression level for outgoing data. Values are *basic* and *frozen*.

For more information, see the description of message IST1177I.

System Action: Processing continues.

Operator Response: None.

Programmer Response: You can use the information in this display to monitor the distribution of sessions for different compression levels. This distribution can be altered by using any of the following:
- MODIFY COMPRESS command
- MODIFY VTAMOPTS,CMPMIPS=*cmpmips* command
- CMPVTAM start option
- CMPMIPS start option
- APPL definition statement by CMPAPPLO or CMPAPPLI.

Use the DISPLAY SESSIONS,SID=*sid* command to monitor the compression performance of individual sessions. See the explanation of message IST879I for a description of the information in this display.

See *z/OS Communications Server: SNA Operation* for more information on commands. See the *z/OS Communications Server: SNA Resource Definition Reference* .

See the *z/OS Communications Server: SNA Network Implementation Guide* for more information about Data Compression.

IST1436I RU PENDING:

Explanation: This message is the first in a group of messages that VTAM issues when the request unit (RU) *runame* has been pending on the node *fornodename* for a period of time without receipt of a corresponding response unit. A complete description of the message group follows.

```
 IST1436I RU PENDING:
 IST1278I runame FROM fromnetid TO tonetid FOR fornodename
[IST531I  FROM SUBAREA = subarea, ELEMENT = element]
[IST531I  TO SUBAREA = subarea, ELEMENT = element]
 IST1051I EVENT CODE = code
 IST1062I EVENT ID = eventid
```

Note: If *runame* remains outstanding for subsequent intervals, these messages will be repeated at such intervals until *runame* is received or until the request unit is purged.

IST531I

VTAM will not issue this message if both **FROM** network name *fromnetid* and **TO** network name *tonetid* are displayed in this message.

VTAM will display this message once if one of the network names is unknown and twice if both of the network names are unknown.

If the subarea and element addresses are unknown, VTAM issues either **0** or ***NA*** in place of the address.

IST1051I

code is an event code that identifies which format of event ID is being displayed.

See the *z/OS Communications Server: IP and SNA Codes* for a description of *code*.

IST1062I

eventid is an internal VTAM identifier of the pending request.

See the *z/OS Communications Server: IP and SNA Codes* for a description of *eventid*.

IST1278I

runame is the request unit (RU) that is pending. See Chapter 14, "Command and RU types in VTAM messages" on page 685 for a description of *runame*.

The origin and destination of *runame* are identified by one of the following:

– Network names (*fromnetid* and *tonetid*) as displayed in this message.

– Network addresses (subarea number *subarea* and element number *element*) as displayed in message IST531I.

Note: VTAM will not issue message IST531I if both **FROM** network name *fromnetid* and **TO** network name *tonetid* are displayed in this message. VTAM will display message IST531I once if one of the network names is unknown and twice if both of the network names are unknown. If the subarea and element addresses are unknown, VTAM issues either **0** or ***NA*** in place of the address.

fornodename is the name of the node with the pending RU. If *fornodename* is session-capable, VTAM issues *fornodename* as a network-qualified name in the form *netid.name*.

IST1436I

This is the header message for message IST1278I.

System Action: Processing continues, awaiting the corresponding response unit.

Operator Response: This message group indicates that a problem **may** exist. The longer an RU remains outstanding (that is, the more often these messages reappear for the same RU), the more likely it is that a problem exists.

If a particular RU remains outstanding for an extended period of time, display the node for which the I/O is pending, and save the system log for problem determination.

- If *runame* is **CD DSEARCH**, this message group may indicate one of the following problems:
  – A low IOINT value and no ADJSSCP table values were coded.
  – The DYNASSCP start option and the ADJSSCP table are not properly tuned.

  See the *z/OS Communications Server: SNA Diagnosis Vol 1, Techniques and Procedures* for more information about these DSRLST problems.
- If *runame* is **CHAR CODED**, this message group indicates that VTAM sent a USSMSG to the LU and is waiting for a response. This is usually a device problem. A frequent cause of this error is when a user powers off the terminal without logging off first. To correct the situation, enter a VARY INACT command for the resource *fornodename* and then enter a VARY ACT for the same resource.
- If *runame* is **NMVT**, this message group may indicate that the device is not real-time-monitor-capable. This means that the device did not process the response and return the requested information properly to the NetView program for most devices, or to the RISC System/6000 network management program for RISC System/6000 devices. A microcode change is needed to permanently resolve this problem.

  See the *z/OS Communications Server: SNA Diagnosis Vol 1, Techniques and Procedures* for more information about this problem.

Programmer Response: You can use the MODIFY IOPD command to change the time-out interval controlling the display of this message. See the *z/OS Communications Server: SNA Operation* for additional information.

See the *z/OS Communications Server: SNA Diagnosis Vol 1, Techniques and Procedures* for information on the wait procedure.

IST1438I LOGMODE *logmode* **UNKNOWN IN THIS DOMAIN, DEFAULT IS ISTCOSDF**

Explanation: This message is part of a message group that VTAM issues in response to a DISPLAY SESSIONS,SID command. The first message in the group is IST879I. See the description of that message for more information.

IST1439I *percent* **PERCENT OF** *storage_type* **USED FOR STRUCTURE** *structure*

Explanation: VTAM has detected a possible storage shortage problem in a coupling facility structure. You can issue D NET,STATS,TYPE=CFS,STRNAME=*structure* to get the storage utilization for the structure.

This message is issued for each storage type that exceeds 80% storage being used.

This message will remain on the screen until the problem has been corrected.

percent is the percentage in use for *storage_type*.

storage_type identifies the type of storage shortage. Possible values are:

ELEMENTS
The storage shortage pertains to list elements in a coupling facility list structure.

ENTRIES
The storage shortage pertains to list entries in a coupling facility list structure.

STORAGE
The storage shortage pertains to total storage in a coupling facility structure.

structure is the name of the coupling facility structure.

System Action: If *percent* is **100** and *storage_type* is either **ENTRIES** or **ELEMENTS**, VTAM automatically attempts to start a rebuild to adjust the number of entries or elements available. IST1381I is issued if VTAM was able to start the rebuild.

Note: If there is another IST1439I message indicating that total storage (i.e., *storage_type* is **STORAGE**) is equal or greater than 80% full, VTAM will not attempt a rebuild to alter the number of entries or elements. See Operator Response below, for how to relieve the total storage problem.

If equal or greater than 80% full, and *storage_type* is **STORAGE**, VTAM when doing a rebuild will use SIZE value as coded in CFRM policy instead of INITSIZE.

If *percent* is **100** and *storage_type* is **STORAGE**, indicating that the structure is full, attempts by VTAM applications to register generic resources might fail or attempts to log on to generic resources may fail.

Operator Response: If *storage_type* is **STORAGE**, issue D NET,STATS,TYPE=CFS,STRNAME=*structure* and perform the following based on the structure size indicated in message IST1375I:

- If the current size is smaller than the maximum size, rebuild the structure into a facility with space that will allow the maximum size to be allocated.
- If the current size and maximum size are the same, update the size of the structure in the active CFRM policy and start a rebuild.

  Note: See the *z/OS Communications Server: SNA Network Implementation Guide* for information on estimating coupling facility structure storage.

If *storage_type* is **ENTRIES** or **ELEMENTS** and the percentage is less than 100, a rebuild could be started using the SETXCF START,REBUILD command. This will cause VTAM to adjust the number of entries and elements available in the structure. If a rebuild is not started by operator, VTAM automatically attempts a rebuild in the case when the storage is totally exhausted (*percent* is 100).

Programmer Response: None.

IST1440I USE = *text*

Explanation: VTAM issues this message in response to a DISPLAY ID command, when the resource being displayed is a line in an NCP major node.

text identifies the usage of the line

EP, DEFINED RESOURCE, CANNOT BE REDEFINED
indicates that the line is in EP mode, is a defined line and cannot be redefined.

NCP, DEFINED RESOURCE, CANNOT BE REDEFINED
indicates that the line is in NCP mode, is a defined line and cannot be redefined.

NCP, DEFINED RESOURCE, CAN BE REDEFINED
indicates that the line is in NCP mode, is a defined line and can be redefined.

NCP, SPARE RESOURCE, CAN BE REDEFINED
indicates that the line is in NCP mode, is a spare line and can be redefined.

System Action: Processing continues

Operator Response: None

Programmer Response: None

IST1441I VARY ACT FOR *linename* **FAILED, USE=SPARE**

Explanation: VTAM issues this message in response to a VARY ACT command, when the resource being activated is a spare line.

linename identifies the name of the line.

System Action: Processing continues

Operator Response: If the line should be DEFINED, issue the MODIFY LINEDEF command, specifying USE=DEFINED.

Programmer Response: None

IST1442I MODIFY LINEDEF FAILED, *linename* **CANNOT BE REDEFINED**

Explanation: VTAM issues this message in response to a MODIFY LINEDEF command, when the line cannot be redefined.

linename identifies the name of the line.

System Action: Processing continues.

Operator Response: Display the line to ensure the correct line is being used.

Save the system log for problem determination.

Programmer Response: Ensure that the line has been defined correctly.

IST1443I ACYDDF LOADED – NO ACCESS AUTHORITY CHECKING

Explanation: VTAM issues this message when the ACYDDF directory definition file was successfully loaded but no valid security records were found.

System Action: No additional authorization checking is performed on association requests from remote CMIP services. Processing continues.

Operator Response: None.

Programmer Response: If no association security checking is desired, no action is required.

Verify that the proper associationKey entry is present in ACYDDF, then issue another MODIFY TABLE command. If this message continues to be displayed, restart CMIP services.

IST1444I *filename* **NOT LOADED –** *reason*

Explanation: VTAM issues this message when a CMIP services directory definition file (DDF) was not loaded successfully.

filename is the name of the directory definition file (ACYDDF).

reason displays the reason for the unsuccessful load. *reason* can be the following values:

DUPLICATE ATTRIBUTE AT RECORD *record*
The same attribute keyword was used more than once with a given value for “name”.

record indicates the record number (line number) in the directory definition file for the last line of the attribute where the error is found.

ERROR READING FILE
A DASD or other error was encountered while reading ACYDDF.

FILE NOT FOUND
The file in the start procedure containing the ISTCMIP DD statement was not found.

INSUFFICIENT STORAGE
There is not enough internal table storage available for the number of entries in the directory definition file.

LINE EXCEEDS 2080 AT RECORD *record*
Continuation lines caused the total line length to exceed 2080.

record indicates the record number (line number) in the directory definition file for the last line of the attribute where the error is found.

LRECL EXCEEDS 2080
The logical record length of the file in the start procedure containing the ISTCMIP DD statement exceeded 2080.

NAME MISSING BEFORE RECORD *record*
record was something other than a “name” record. The prior “class” record needs a “name” record before any attributes can be defined.

record indicates the record number (line number) in the directory definition file for the last line of the attribute where the error is found.

NAME VALUE NOT VALID AT RECORD *record*
The value given for a “name” entry is not a valid CMIP distinguished name.

record indicates the record number (line number) in the directory definition file for the last line of the attribute where the error is found.

NO CLASS SPECIFIED
The first non-comment record of the directory definition file was a “name” record which had an unknown “class”. The first non-comment record of the directory definition file must contain a “class” record to identify the class of subsequent entries.

SYNTAX ERROR AT RECORD *record*
A syntax error was detected in the *record* record of the directory definition file. The error might have been caused by one of the following:

- There is only one word on the line
- A quoted string exists that has not been terminated with another quote before the end of the line, including any valid continuation lines.
- The keyword was “class” and the following value was neither “aetitle” nor “managed” (object).
- The conversion of a distinguished name to a standard internal representation failed because the name had both kinds of quotes in it.
- The conversion of a distinguished name to a standard internal representation failed because the name had bad syntax.
- The key value for associationKey in a DDF entry is not one of the three special values ('*' '–' '.') and is not exactly 16 hexadecimal digits.
- The value for timeSync is too large (greater than 86,400).
- The value for timeSync is not numeric.
- The attribute keyword (first word of the line) was not recognized as a valid one. (This might be due to a mistake in spelling or capitalization.)

record indicates the record number (line number) in the directory definition file for the last line of the attribute where the error is found.

System Action: Processing continues. If CMIP services is just being started, initialization will not complete successfully. If CMIP services was started earlier with a valid directory definition file, it will continue to run with the previous definitions.

Operator Response: Save the system log for problem determination.

Programmer Response: Action depends on the value for *reason*:

DUPLICATE ATTRIBUTE AT RECORD *record*
Remove one of the duplicate attributes, then issue the MODIFY TABLE command or restart CMIP services.

ERROR READING FILE
Correct the problem, then issue the MODIFY TABLE command or restart CMIP services.

FILE NOT FOUND
Verify that the name of the directory definition file has the correct name, then issue the MODIFY TABLE command or restart CMIP services.

INSUFFICIENT STORAGE
Wait until enough storage has been made available, then issue the MODIFY TABLE command or restart CMIP

services. Halting and restarting CMIP services could free up the current copy of the DDF table, which might allow the new table to be read. See *z/OS Communications Server: SNA Diagnosis Vol 1, Techniques and Procedures* for more information on how to correct storage problems.

LINE EXCEEDS 2080 AT RECORD *record*
Shorten the line, then issue the MODIFY TABLE command or restart CMIP services.

LRECL EXCEEDS 2080
Create a version of the directory definition file with a logical record length less than 2080 (using line continuation as required), then issue the MODIFY TABLE command or restart CMIP services.

NAME MISSING BEFORE RECORD *record*
Correct the problem, then issue the MODIFY TABLE command or restart CMIP services.

NAME VALUE NOT VALID AT RECORD *record*
Correct the problem, then issue the MODIFY TABLE command. If the problem persists, restart CMIP services.

NO CLASS SPECIFIED
Add the proper “class” record before the first “name” record, then issue the MODIFY TABLE command or restart CMIP services.

SYNTAX ERROR AT RECORD *record*
Correct the problem, then issue the MODIFY TABLE command or restart CMIP services.

IST1445I RESOURCE *value* **FOR USERVAR** *uservar* **NOT FOUND**

Explanation: VTAM issues this message in response to a DISPLAY ID=*uservar*,IDTYPE=USERVAR when the application program, *value*, that is associated with USERVAR, *uservar*, is not defined to VTAM.

value is the VALUE of the USERVAR. *value* is an application program that is displayed as a network-qualified name in the form *netid.name*, if *value* was a network-qualified name on the MODIFY USERVAR command.

uservar is the name of the USERVAR.

System Action: VTAM rejects the command.

Operator Response: Activate the application major node containing *value* and reenter the command.

Programmer Response: None.

IST1446I SYMBOLIC SUBSTITUTION NOT AVAILABLE IN THIS RELEASE OF MVS

Explanation: VTAM issues this message when an ampersand (&) is encountered in an input record in a member of VTAMLST and VTAM is running on a release of MVS that does not support symbolic substitution. Symbolic substitution is available on MVS V5R2 and later releases.

System Action: Processing continues.

Operator Response: Save the system log for problem determination.

Programmer Response: Correct the VTAM definition library member by removing the ampersand or symbolic variable.

IST1447I REGISTRATION TYPE = *registration_type*

Explanation: This message is issued with a group of messages in response to the DISPLAY ID command. It displays the registration type for the resource, if applicable.

registration_type can have the following values:
NO Resource registration type is none.
NETSRVR
Resource registration type is network node server.
CDSERVR
Resource registration type is central directory server.

The value for *resource_type* is determined by resource definition unless it has been changed by the MODIFY RESOURCE command. See the *z/OS Communications Server: SNA Network Implementation Guide* for more information about resource registration.

System Action: Processing continues.

Operator Response: None.

Programmer Response: None.

IST1449I DEFAULTS WILL BE USED IF NO OVERRIDE IS SPECIFIED

Explanation: VTAM issues this message during START processing when a start option is specified with a value that is not valid or when a syntax error is detected in the START command. After issuing IST1449I, VTAM will issue IST1311A to prompt the operator to reenter the start options. If the operator does not enter overriding values, VTAM will use default values for the start options in error.

System Action: Processing will be halted while VTAM waits for a reply to IST1311A.

- If the LIST start option is entered, VTAM ignores it.
- If HALT is entered, start processing ends and VTAM is terminated.

Operator Response:

- Enter start options to override current values, or enter a blank to indicate that you want default values. If you need another prompt for further overrides, follow the last option with a comma.
- Enter HALT to terminate VTAM.

Programmer Response: None.

IST1450I GLOBAL TNSTAT = *status* **CNSL =** *console* **TIME =** *interval*

Explanation: VTAM issues this message as part of the response to the DISPLAY TNSTAT or MODIFY TNSTAT commands.

When *status* is ACTIVE, that indicates that all non-TRLE devices are recording, and recording will be initiated automatically for newly activated devices. When *status* is INACTIVE, that indicates that recording is not in effect for non-TRLE controlled devices, nor will recording be initiated automatically for newly activated devices.

When *console* is YES, that indicates that tuning statistics reports are displayed at the system console. When *console* is NO, that indicates that tuning statistics reports are not displayed at the system console.

interval is the number of minutes in the tuning statistics reporting interval.

System Action: Processing continues.

Operator Response: None.

Programmer Response: None.

IST1451I TRLE = trlename TNSTAT = status

Explanation: VTAM issues this message as part of the response to the DISPLAY TNSTAT and MODIFY TNSTAT commands.

trlename is the name of the TRLE for which status is being reported.

When *status* is ACTIVE, that indicates that tuning statistics are currently being recorded for the devices within the TRLE. When *status* is INACTIVE, that indicates that tuning statistics are not currently being recorded for the devices within the TRLE.

System Action: Processing continues.

Operator Response: None.

Programmer Response: None.

IST1452I *type* **MISMATCH IGNORED FOR** *puname*

Explanation: VTAM issues this message as part of a group of messages when a connection for the switched physical unit *puname* was established, but the CP name or the station ID of *puname* did not match the CP name or station ID that was passed in the XID request. A description of the message group follows.

```
IST1452I  type MISMATCH IGNORED FOR puname
IST1394I  CPNAME = cpname  STATION ID = stationid
IST314I   END
```

IST1452I

puname is the name of the PU.

type is the type of mismatch that occurred. Possible values are **CPNAME** or **STATION ID**.

IST1394I

cpname is the network-qualified name of the control point (CP) that was passed in the XID from the node attempting the connection. VTAM displays *cpname* in the form *netid.name*.

stationid is the station identifier expressed in hexadecimal. For more information on station identifier formats, see the descriptions of the IDBLK and IDNUM operands in the *z/OS Communications Server: SNA Resource Definition Reference*.

System Action: The connection will be established. Processing continues.

Operator Response: Enter a DISPLAY ID on *puname* and save the system log for problem determination.

Programmer Response: Perform one of the following:

- Reinitialize the physical unit with the correct station identifier or CP name.
- Check for a CP name or station ID mismatch between the PU and the switched major node and revise as needed.

IST1453I VARY INACT FOR *resourcename* **FAILED - FRSESET PU ACTIVE**

Explanation: VTAM issues this message when a VARY NET,INACT,ID=*resourcename* was attempted for a frame relay LMI PU and at least one FRESESET PU associated with that LMI PU is still active. The deactivation attempt is ignored.

System Action: Processing continues. The deactivation attempt is ignored.

Operator Response: All of the FRSESET PUs must be deactivated before deactivation of the LMI PU. To determine the FRESESET PUs defined under the LMI PU you wish to deactivate, perform the following steps:

1. Issue a DISPLAY ID for the LMI PU you wish to deactivate to get the corresponding line name.
2. Issue a DISPLAY LINE (with SCOPE=ALL) to obtain the names for the FRSESET PUs defined under the line.

Programmer Response: None.

IST1454I *count type* **DISPLAYED [FOR ID =** *rscname* **| FOR LU =** *rscname***]**

Explanation: IST1454I is issued once for every ID value (*rscname*) specified on the DISPLAY command and indicates how many (*count*) resources matched the command specifications (for example ID, EXCLUDE, SCOPE, IDTYPE). This message was issued in response to one of the following commands.

- DISPLAY ADJSSCPS
- DISPLAY APPLS
- DISPLAY CDRMS
- DISPLAY CDRSCS
- DISPLAY CPCP
- DISPLAY CLSTRS
- DISPLAY EXIT
- DISPLAY GRAFFIN
- DISPLAY GROUPS
- DISPLAY LINES
- DISPLAY LUGROUPS,SCOPE=ALL
- DISPLAY MAJNODES
- DISPLAY PATHTAB
- DISPLAY PENDING
- DISPLAY RSCLIST
- DISPLAY RTPS
- DISPLAY SRCHINFO
- DISPLAY STATIONS

- DISPLAY STATS,TYPE=VTAM
- DISPLAY STORUSE
- DISPLAY TABLE,SCOPE=ALL
- DISPLAY TERMS
- DISPLAY TGPS
- DISPLAY TOPO,LIST=TDUINFO
- DISPLAY TRL
- DISPLAY USERVAR.

rscname is network-qualified only if the corresponding ID keyword was network-qualified on the DISPLAY command. FOR ID=*rscname* is not present if ID was not coded on the command.

IST1454I is issued even if the specified MAX limit is reached for the command.

type is based on the command issued, as follows:

Display Command	type
DISPLAY ADJSSCPS	RESOURCE(S)
DISPLAY APPLS	RESOURCE(S)
DISPLAY CDRMS	RESOURCE(S)
DISPLAY CDRSCS	RESOURCE(S)
DISPLAY CLSTRS	RESOURCE(S)
DISPLAY CPCP	ADJCP(S)
DISPLAY EXIT	EXIT(S)
DISPLAY GRAFFIN	AFFINITY, AFFINITIES
DISPLAY GROUPS	RESOURCE(S)
DISPLAY LINES	RESOURCE(S)
DISPLAY LUGROUPS	RESOURCE(S)
DISPLAY MAJNODES	RESOURCE(S)
DISPLAY PATHTAB	PATH(S)
DISPLAY PENDING	RESOURCE(S)
DISPLAY RSCLIST	RESOURCE(S)
DISPLAY RTPS	RTP(S)
DISPLAY SRCHINFO,LIST=ALL	PAIR(S)
DISPLAY SRCHINFO,LIST=SUMMARY	CP NAME(S), SSCP(S)
DISPLAY SRCHINFO,SID	ADJSSCP(S)
DISPLAY STATIONS	STATION(S)
DISPLAY STATS,TYPE=VTAM	STATISTICS
DISPLAY STORUSE,APPL	APPL(S)
DISPLAY STORUSE,DSPNAME	DSPNAME(S)
DISPLAY STORUSE,JOBNAME	JOBNAME(S)
DISPLAY STORUSE,POOL	POOL(S)
DISPLAY TABLE	RESOURCE(S)
DISPLAY TERMS	RESOURCE(S)
DISPLAY TOPO,LIST=TDUINFO	TDUINFO(S)
DISPLAY TGPS	TGP(S)
DISPLAY TRL	TRLE(S)
DISPLAY USERVAR	USERVAR(S)

System Action: Processing continues.

Operator Response: None.

Programmer Response: None.

IST1455I ERROR DETECTED BY EXIT SERVICES FOR *exitname* **IN** *modulename*

Explanation: This message is the first in a group of messages issued by VTAM exit services when an error has been detected while processing a request from a user-written exit. A complete description of the message group follows.

```
IST1455I ERROR DETECTED BY EXIT SERVICES FOR exitname IN modulename
IST1456I FUNCTION function - REASON: reason
IST314I  END
```

IST1455I

exitname is the CSECT name of the exit.

modulename is the name of the load module that contains *exitname*.

IST1456I

function is the function being performed by VTAM exit services and can be one of the following:

***UNKNOWN**
The function requested could not be determined.

MESSAGE
The exit *exitname* requested the message function.

reason is the reason for the error and can be one of the following:

EXSPL POINTER IS ZERO
The pointer to the EXSPL (passed by the exit in register 1) is zero.

INPUT PARMLIST POINTER IS ZERO
The pointer to the input parameter list in the EXSPL is zero.

MESSAGE LENGTH IS NOT VALID
The message text length specified in the EXMPL is not valid. Message text length must be greater than 0 and less than or equal to 4096 (decimal).

MESSAGE TEXT POINTER IS ZERO
The pointer to the message text in the EXMPL is zero.

REQUESTED FUNCTION IS NOT VALID
The function code specified in the EXSPL is not defined to (nor supported by) the current level of VTAM exit services.

VTAM MESSAGE MACRO FAILED
The macro used by VTAM to send a message to the system console returned a nonzero return code to exit services.

System Action: Processing continues.

Operator Response: Save the system log for problem determination.

Programmer Response: Correct the error in *exitname*. See *z/OS Communications Server: SNA Customization* for more information on *exitname*.

IST1456I FUNCTION *function* **— REASON:** *reason*

Explanation: VTAM issues this message as part of a message group. The first message in the group is IST1455I. See the explanation of that message for a complete description.

IST1457I VTAM APING VERSION *apver* **(PARTNER TP VERSION** *partver***)**

Explanation: This message is the first in a group of messages that VTAM's APING transaction program (TP) issues in response to the DISPLAY APING command. This group of messages provides information about the exchange of data between the APING TP and its partner TP. A complete description of the message group issued for a normal, non-exception APING transaction on the APING side follows.

The following is an example of messages that could be issued in the message group.

```
 IST1457I VTAM APING VERSION apver (PARTNER TP VERSION partver)
 IST1490I DLU=dluname SID=sid
 IST1462I ECHO IS [ON|OFF|FORCED]
 IST1463I ALLOCATION DURATION: time MILLISECONDS
 IST1464I PROGRAM STARTUP AND VERSION EXCHANGE: time MILLISECONDS
[IST1465I         DURATION      DATA SENT     DATA RATE    DATA RATE]
[IST1466I       (MILLISECONDS)   (BYTES)     (KBYTE/SEC)  (MBIT/SEC)]
```

IST1457I

```
[IST1467I           dur           dsnt           drkb        drmb]
[IST1467I           dur           dsnt           drkb        drmb]
[IST1468I TOTALS:   durt          dsntt          drkbt       drmbt]
[IST1469I DURATION STATISTICS:]
[IST1470I MINIMUM = min   AVERAGE = avg   MAXIMUM = max]
 IST314I END
```

IST1457I

apver identifies the VTAM version of APING.

partver identifies the APING version of the partner TP.

IST1462I

This message displays the value of ECHO. Possible values are:

NO
The partner TP does not echo back to APING.

YES
The partner TP does echo back to APING.

FORCED
The issuer has specified ECHO=NO, but the partner TP cannot support ECHO=NO. In this case, ECHO=YES will be used.

IST1463I

This message displays the time it takes to perform the conversation allocation between APING and its partner TP.

IST1464I

This message displays the time it takes to perform the version exchange between APING and its partner TP. The time starts when the data is sent and timer stops when the partner's version has been received.

IST1465I

This message is a header message for information displayed in IST1467I.

IST1466I

This message is a header message for information displayed in IST1467I.

IST1467I

dur is the time it takes to send the data and receive the echo (or confirm for one way transactions).

dsnt is the count of sent and received bytes. If message IST1462I indicates that ECHO IS OFF, the total is (SIZE * CONSEC) from the D NET,APING command. Otherwise, the total is (2 * SIZE * CONSEC).

drkb is the data rate in KB.

drmb is the data rate in MB.

Decimal values are not displayed in the message. If a decimal results from data rate calculations, the number is truncated to the whole number. If the decimal value is less than one, zero is displayed.

IST1468I

durt is the total of the duration time in all IST1467I messages.

dsntt is the total of the data sent for all IST1467I messages.

drkbt is the data rate in KB calculated from all of the data rates in IST1467I.

drmbt is the data rate in MB calculated from all of the data rates in IST1467I.

Decimal values are not displayed in the message. If a decimal results from data rate calculations, the number is truncated to the whole number. If the decimal value is less than one, zero is displayed.

IST1469I

This message states that message IST1470I is going to display duration statistics.

IST1470I

min is the minimum duration displayed in all IST1467I messages.

avg is the average of all the duration times displayed in IST1467I messages.

max is the maximum duration displayed in all IST1467I messages.

IST1490I

dluname is the name of the destination logical unit (DLU) with which the APING transaction occurs.

sid is the session identifier (SID) that is used to identify the session over which the APING transaction occurs. The value ***NA*** will be displayed if the session identifier was not currently available to VTAM.

If VTAM allocates a session to transmit the APING data, a message group with IST1489I as the first message is also issued. The name of the DLU in the two message groups might not match if any name translation has occurred on the route between the LUs.

System Action: Processing continues.

Operator Response: None.

Programmer Response: None.

IST1458I ORIGIN ADJSUB VR TP ER REVERSE ER

Explanation: This message is part of a message group. Please see the explanation for message IST1489I for a detailed explanation of this message.

System Action: Processing continues.

Operator Response: None.

Programmer Response: None.

IST1459I *originsa destsa vr tp er re*

Explanation: This message is part of a message group. Please see the explanation for message IST1489I for a detailed explanation of this message.

System Action: Processing continues.

Operator Response: None.

Programmer Response: None.

IST1460I TGN CPNAME TG TYPE HPR

Explanation: This message is part of a message group. Please see explanation for message IST1489I for a detailed explanation of this message.

System Action: None.

Operator Response: None.

Programmer Response: None.

IST1461I *tgn cpname tgtype hpr*

Explanation: This message is part of a group of messages. The first message is either IST1476I or IST1489I. See the explanation of those messages for a full description.

System Action: None.

Operator Response: None.

Programmer Response: None.

IST1462I ECHO IS *echotype*

Explanation: This message is part of a message group. Please see the explanation for message IST1457I for a detailed explanation of this message.

System Action: Processing continues.

Operator Response: None.

Programmer Response: None.

IST1463I ALLOCATION DURATION: *time* **MILLISECONDS**

Explanation: This message is part of a message group. Please see the explanation for message IST1457I for a detailed explanation of this message.

System Action: Processing continues.

Operator Response: None.

Programmer Response: None.

IST1464I PROGRAM STARTUP AND VERSION EXCHANGE: *time* **MILLISECONDS**

Explanation: This message is part of a message group. Please see the explanation for message IST1457I for a detailed explanation of this message.

System Action: Processing continues.

Operator Response: None.

Programmer Response: None.

IST1465I DURATION DATA SENT DATA RATE DATA RATE

Explanation: This message is part of a message group. Please see the explanation for message IST1457I for a detailed explanation of this message.

System Action: Processing continues.

Operator Response: None.

Programmer Response: None.

IST1466I (MILLISECONDS) (BYTES) (KBYTE/SEC) (MBIT/SEC)

Explanation: This message is part of a message group. Please see the explanation for message IST1457I for a detailed explanation of this message.

System Action: Processing continues.

Operator Response: None.

Programmer Response: None.

IST1467I *dur dsnt drkb drmb*

Explanation: This message is part of a message group. Please see the explanation for message IST1457I for a detailed explanation of this message.

System Action: Processing continues.

Operator Response: None.

Programmer Response: None.

IST1468I TOTALS: *dur dsnt drkb drmb*

Explanation: This message is part of a message group. Please see the explanation for message IST1457I for a detailed explanation of this message.

System Action: Processing continues

Operator Response: None

Programmer Response: none

IST1469I DURATION STATISTICS:

Explanation: This message is part of a message group. Please see the explanation for message IST1457I for a detailed explanation of this message.

System Action: Processing continues.

Operator Response: None.

Programmer Response: None.

IST1470I MINIMUM = *min* AVERAGE = *avg* MAXIMUM = *max*

Explanation: This message is part of a message group. Please see the explanation for message IST1457I for a detailed explanation of this message.

System Action: Processing continues.

Operator Response: None.

Programmer Response: None.

IST1471I SESSION UNAVAILABLE FOR APING

Explanation: This message is a single line message issued in response to a DISPLAY APING command when VTAM is unable to start an APING transaction because no sessions are available for the specified partner and logmode.

System Action: Processing continues.

Operator Response: None.

Programmer Response: None.

IST1472I APING *errtype* ERROR

Explanation: This message is the first in a group of messages that VTAM issues when an error case occurs in processing the DISPLAY APING command. The group can be issued a significant amount of time after the DISPLAY APING command has been issued.

The following is an example of the message group:

```
IST1472I APING TRANSACTION ERROR
IST1219I RTNCD=rtncd, FDB2=fdb2
IST1002I RCPRI=rcpri, RCSEC=rcsec
IST1473I SENSE = sense_code
IST314I END
```

IST1002I

rcpri is the value of the primary return code issued by VTAM.

rcses is the value of the secondary return code issued by VTAM.

IST1219I

rtncd is the error field RPLRTNCD. It is a hexadecimal va lue returned by the SETLOGON macro.

fdb2 is the feedback field RPLFDB2. It is a hexadecimal value returned by the SETLOGON macro.

IST1472I

This message states that an APING transaction error has occurred.

errtype states what type of APING error has occurred. If the APING error is due to a protocol violation of APINGD, *errtype* is PROTOCOL. Otherwise, *errtype* is TRANSACTION.

IST1473I

This message provides sense code information.

System Action: Processing stops.

Operator Response: Try the DISPLAY APING command again. If the command still fails, save the system log for problem determination.

Programmer Response: Use the system log and return code information to assist you in correcting the problem.

IST1473I SENSE = *sense_code*

Explanation: This message is part of a message group. See the explanation for message IST1472I for a detailed explanation of this message.

System Action: Processing continues.

Operator Response: None.

Programmer Response: None.

IST1474I APINGD TP CONCURRENT INSTANCE LIMIT = *value***|UNLIMITED.**

Explanation: This message is issued in response to the DISPLAY APINGDTP command and displays the number of APINGD transaction programs that are permitted to run concurrently.

value indicates the number of instances of the APINGD transaction program allowed to run concurrently.

UNLIMITED indicates that there is no limit to the number of instances of the APINGD transaction program permitted to run concurrently.

System Action: Processing continues.

Operator Response: None.

Programmer Response: None.

IST1475I EXIT *exitname* **INVOKED: RE-ENTER FORCE COMMAND**

Explanation: VTAM issues this message in response to the MODIFY EXIT OPTION=FORCE command when the exit to be forced inactive is currently being invoked.

exitname is displayed in the form *routine_name.instance_name* where:

routine_name is the name of the installation-wide exit routine.

instance_name is the instance name of the exit routine. When issued for the base exit, *.instance_name* is blank.

System Action: Inactivation continues. Under certain circumstances, however, the exit might “hang” in a pending inactive state.

Operator Response: Wait a short period, then enter D NET, EXIT to display the exit being forced. If the state is still PENDING INACTIVE, reissue the command. Otherwise, no further action is necessary.

Programmer Response: None.

IST1476I TCID X’*tcid***’ – REMOTE TCID X’***remote_tcid***’**

Explanation: VTAM issues this message as part of a group of messages in response to a DISPLAY ID command for a type 2.1 node representing a Rapid Transport Protocol (RTP) route.

This message is the first in a group of messages and the full description of the message group follows:

```
|   IST1476I      TCID X'tcid' - REMOTE TCID X'remote_tcid'
|   IST1481I      DESTINATION CP nodename - NCE X'nceid'
|   IST1587I      ORIGIN NCE X'nceid'
|   IST1477I      ALLOWED DATA FLOW RATE = allowed units
|   IST1516I      INITIAL DATA FLOW RATE = initial units
|   IST1841I      ACTUAL DATA FLOW RATE = actual units
|   IST1511I      MAXIMUM NETWORK LAYER PACKET SIZE = size BYTES
|   IST1478I      NUMBER OF UNACKNOWLEDGED BUFFERS = buffers
|   IST1479I      RTP CONNECTION STATE = state - MNPS = mnps
|   IST1855I      NUMBER OF SESSIONS USING RTP = sessions
|  [IST1697I      RTP PACING ALGORITHM = ARB RESPONSIVE MODE]
|  [IST1480I      RTP END TO END ROUTE - RSCV PATH]
|  [IST1460I      TGN    CPNAME            TG TYPE       HPR]
|  [IST1461I      tgn    cpname            tgtype        hpr]
|  [IST1588I      RTP END TO END ROUTE - COMPUTED SESSION PATH]
```

```
[IST1460I      TGN    CPNAME            TG TYPE       HPR ]
[IST1461I      tgn    cpname            tgtype        hpr ]
[IST875I       ALSNAME TOWARDS adjacent_resource_type = resource_name]
[IST1738I      ANR LABEL                TP            ER NUMBER]
[IST1739I      anr_label                tp            er_number]
[IST1860I      NUMBER OF NLPS SENT = sent - OVERFLOW = overflow]
[IST1861I      NUMBER OF NLPS RECEIVED = received - OVERFLOW = overflow]
[IST1842I      NUMBER OF NLPS RETRANSMITTED = retransmitted]
[IST1843I      NUMBER OF NLPS ON WAITING-TO-SEND QUEUE = waitsend]
[IST1847I      NUMBER OF NLPS ON WAITING-FOR-ACKNOWLEDGEMENT QUEUE = waitack]
[IST1862I      ARB MAXIMUM SEND RATE = maximum units]
[IST1844I      ARB MODE = mode]
[IST1845I      BOUNDARY DIVIDING REGIONS lower AND upper = boundary MILLISECONDS]
:
[IST1846I      Type RECEIVER THRESHOLD = threshold MICROSECONDS]
:
[IST1848I      SEND BYTE COUNT = sendcount RECEIVE BYTE COUNT = receivecount]
[IST1849I      LARGEST NLP SENT = size BYTES]
[IST1850I      LARGEST NLP RECEIVED = size BYTES]
[IST1851I      SMOOTHED ROUND TRIP TIME = smoothed_time MILLISECONDS]
[IST1852I      LIVENESS TIMER = liveness SECONDS]
[IST1853I      NUMBER OF NLPS ON OUT-OF-SEQUENCE QUEUE = outofsequence]
[IST1854I      NUMBER OF NLPS ON INBOUND SEGMENTS QUEUE = inboundsegs]
[IST1856I      LAST PATHSWITCH OCCURRENCE WAS ON date AT time]
[IST1817I      PATH SWITCH REASON: RTP CONNECTION UNAVAILABLE]
[IST1818I      PATH SWITCH REASON: SHORT REQUEST RETRY LIMIT EXHAUSTED]
[IST1819I      PATH SWITCH REASON: TG INOP]
[IST1820I      PATH SWITCH REASON: MODIFY RTP COMMAND ISSUED]
[IST1821I      PATH SWITCH REASON: AUTO PATH SWITCH FOR PSRETRY]
[IST1822I      PATH SWITCH REASON: UNKNOWN]
[IST924I       ---------------------------------------------------------]
[IST1857I      BACKPRESSURE REASON COUNTS:]
[IST1858I      PATHSWITCH    SEND QUEUE MAX    STORAGE FAILURE]
[IST1859I     pathswitch      sendqmax           storefail]
[IST924I       ---------------------------------------------------------]
```

IST875I

This message displays information about the adjacent link station (**ALSNAME**) which is the physical connection to the adjacent node.

adjacent_resource_type will always be RTP, which means that the ALSNAME is used in the direction of other end point of the RTP pipe.

resource_name is the name of the adjacent link station (ALS).

IST924I

This message is used as a separator message to group together messages IST1857I, IST1858I, and IST1859I in the display.

IST1460I

This message is a header message for information displayed in IST1461I.

IST1461I

The route selection control vector (RSCV) is displayed for the route to the destination node of the partner transaction program. Multiple IST1461I messages might be needed to display the full route.

tgn is the transmission group number.

cpname is the destination CP name for the transmission group.

Note: The *cpname* for a composite node might not always be correct. When an SSCP takeover occurs for an NCP in a composite node and the *cpname* was changed, the new *cpname* is not reflected in the display of the RTP end-to-end route.

tgtype is the transmission group type. The values for *tgtype* can be:

APPN

INTERCHANGE

VRTG

ISL (intersubnetwork link).

hpr corresponds with the HPR start option. The values for *hpr* can be:

RTP indicates this VTAM provides RTP-level HPR support

ANR indicates this VTAM provides ANR-level HPR support

NA indicates this VTAM provides no HPR support.

IST1476I

tcid is a transport connection identifier, assigned by this node, that uniquely identifies the session endpoint.

remote_tcid is a transport connection identifier, assigned by the RTP partner node, that uniquely identifies the session endpoint.

IST1477I

allowed is the allowed rate at which data can be sent over the RTP connection at the instant in time this message is displayed.

units is the units of measure for the rate and is displayed in bits, kilobits, or megabits per seconds (BITS/SEC, KBITS/SEC, or MBITS/SEC).

The data flow rate is updated approximately every second while data is flowing.

IST1478I

buffers is the number of I/O buffers, containing outbound data, that have been sent to the partner without an acknowledgment.

IST1479I

state is the connection state of the RTP. The values for *state* can be:

INITIAL
Initial state at startup time

ALS_PENDING
Waiting for adjacent link station processing

ALS_ASSIGNED
Adjacent link station processing is complete

OPENED
Initial state for active partner after startup

CALLING
Active partner sending connection setup to the partner

CALLING/PATHSWITCH
RTP path switch is in progress while in CALLING state

CONNECTED
RTP is active

CONNECTED/PATHSWITCH
RTP path switch is in progress

DISCONNECT
Doing disconnect processing

DISCONNECTED
Disconnect processing is complete and last message has been sent

LISTENING
Initial state for passive partner after startup

LISTENING/PATHSWITCH
RTP path switch is in progress while in LISTENING state

PENDING_ACT
Waiting for activation to complete

PENDING_INACT
Waiting for deactivation to complete

PENDING TAKEOVR
Multinode persistent session planned takeover is in progress

RECOVERY
Multinode persistent session recovery in progress

mnps indicates if the RTP end-to-end route is being used by an MNPS application. The values for *mnps* can be:
YES The RTP is being used by an MNPS application.
NO The RTP is not being used by an MNPS application.

IST1480I

This message informs users that the messages that follow describe the RSCV end-to-end path of the RTP route. The RSCV path represents the route used to send data from the origin CP to the destination CP. This message group will not be displayed if the RTP is processing a path switch.

IST1481I

nodename is the network-qualified name of destination partner's CP in the form *netid.name* for this RTP route.

nceid is the destination partner's network connection endpoint (NCE) ID for this RTP route.

IST1511I

size is the maximum size of a network layer packet (NLP) that can be sent over this Rapid Transfer Protocol (RTP) connection in bytes.

IST1516I

initial is the initial data flow rate for this Rapid Transfer Protocol (RTP) connection.

units is the units of measure for the rate and is displayed in bits, kilobits, or megabits per seconds (BITS/SEC, KBITS/SEC, or MBITS/SEC).

IST1587I

nceid is this node's network connection endpoint (NCE) ID for the Rapid Transfer Protocol (RTP) connection.

IST1588I

This message informs users that the messages that follow describe the computed end-to-end path of the Rapid Transfer Protocol (RTP) route. This message is displayed if the physical path is different from the computed path. The physical and computed session paths can be different when one of the RTP endpoints is associated with a multiple node persistent session (MNPS) application program.

Refer to the *z/OS Communications Server: SNA Network Implementation Guide* for additional information when the computed path is different from the physical path.

IST1697I

This message indicates the type of ARB (Adaptive Rate-Based pacing) algorithm being used. If IST1697I is issued, the responsive mode enhancements for the ARB algorithm are being used. If IST1697I is not issued, the original ARB algorithm is being used.

IST1738I

This message is a header message for information displayed in IST1739I.

IST1739I

anr_label is an identifier for a unidirectional transmission link between two nodes. A node will use this routing label internally to correctly forward HPR network layer packet (NLP) data along a given Rapid Transfer Protocol (RTP) connection.

tp is the subarea transmission priority. When *anr_label* represents a subarea transmission link, tp identifies the priority of data flowing over an explicit route during a session.

er_number is the explicit route number. When *anr_label* represents a subarea transmission link, *er_number* represents the underlying subarea explicit route used for the HPR NLP traffic.

IST1817I

IST1476I

This message is displayed following message IST1856I if HPRDIAG=YES was specified on the DISPLAY ID command for a rapid transfer protocol (RTP) and the last path switch took place because the underlying physical connection or the RTP itself was not in a state suitable for RTP traffic.

IST1818I

This message is displayed following message IST1856I if HPRDIAG=YES was specified on the DISPLAY ID command for a rapid transfer protocol (RTP) and the last path switch took place because the RTP partner was not responding to status requests initiated by this RTP endpoint. Each time a status request is sent to the partner a short request timer is set to time the transaction. If the short request timer expires and no response is received from the partner, the process is repeated. This process will repeat until the retry limit for the RTP pipe is exhausted. When the retry limit is met, a path switch is requested to try to restore communications with the RTP partner.

IST1819I

This message is displayed following message IST1856I if HPRDIAG=YES was specified on the DISPLAY ID command for a Rapid Transfer Protocol (RTP) and the last path switch took place because the physical connection that the RTP pipe traversed suffered an INOP condition.

IST1820I

This message is displayed following message IST1856I if HPRDIAG=YES was specified on the DISPLAY ID command for a Rapid Transfer Protocol (RTP) and the last path switch took place because an operator issued a MODIFY RTP command to force an RTP path switch.

IST1821I

This message is displayed following message IST1856I if HPRDIAG=YES was specified on the DISPLAY ID command for a Rapid Transfer Protocol (RTP) and the last path switch took place because the PSRETRY start option value forced an automatic path switch for this RTP connection.

IST1822I

This message is displayed following message IST1856I if HPRDIAG=YES was specified on the DISPLAY ID command for a Rapid Transfer Protocol (RTP) and the reason for the last RTP path switch is unavailable.

IST1841I

This message shows the actual data flow rate for this Rapid Transfer Protocol (RTP). It should be compared with the allowed data rate displayed by message IST1477I, and the initial data rate displayed by IST1516I.

actual is the actual rate at which data is being sent over the RTP connection at the instant in time this message is displayed.

units is the units of measure for the rate and is displayed in bits, kilobits, or megabits per seconds (BITS/SEC, KBITS/SEC, or MBITS/SEC).

The data flow rate is updated approximately every second while data is flowing.

IST1842I

This message is issued if HPRDIAG=YES is specified.

retransmitted is the number of Network Layer Packets (NLPs) that have been retransmitted for this Rapid Transfer Protocol (RTP).

IST1843I

This message is issued if HPRDIAG=YES is specified.

waitsend is the number of network layer packets (NLPs) currently on the waiting-to-send queue.

IST1844I

This message is issued if HPRDIAG=YES is specified.

mode is the current Adaptive Rate-Based pacing (ARB) mode. The value is one of the following:

Green Data transmission is being performed without significant network congestion.

Yellow
Data transmission is being slowed down because network congestion has been detected.

Red Data transmission is being affected by severe network congestion which might result in packet loss.

IST1845I

This message is issued if HPRDIAG=YES is specified and the base mode ARB algorithm is in use for this Rapid Transfer Protocol (RTP). It is issued three times in order to display each of the three Delay Change Sum (DCS) boundaries dividing the four ARB regions.

lower is a number (1, 2, or 3) representing the ARB region below the boundary.

upper is a number (2, 3, or 4) representing the ARB region above the boundary.

boundary is the DCS boundary in milliseconds dividing the two ARB regions designated by *lower* and *upper*.

IST1846I

This message is issued if HPRDIAG=YES is specified and the responsive mode ARB algorithm is in use for this Rapid Transfer Protocol (RTP). It is issued three times to show each of the receiver thresholds identified by the message: CURRENT, MAXIMUM and MINIMUM.

type is the receiver threshold type. The value is one of the following:

CURRENT
Amount of accumulated network delay permitted before a slowdown message is returned to the connection partner.

MAXIMUM
Maximum amount of accumulated network delay specifically allowed for this link's network capacity.

MINIMUM
Minimum amount of accumulated network delay specifically allowed for this link's network capacity.

threshold is the receiver threshold value, in microseconds.

IST1847I

This message is issued if HPRDIAG=YES is specified.

waitack is the number of network layer packets (NLPs) currently on the waiting-for-acknowledgement queue.

IST1848I

This message is issued if HPRDIAG=YES is specified.

sendcount is the current send byte sequence number count.

receivecount is the current receive byte sequence number count.

IST1849I

This message is issued if HPRDIAG=YES is specified.

size is the number of bytes contained in the largest network layer packet (NLP) sent on this Rapid Transfer Protocol (RTP).

IST1850I

This message is issued if HPRDIAG=YES is specified.

size is the number of bytes contained in the largest network layer packet (NLP) received on this Rapid Transfer Protocol (RTP).

IST1851I

This message is issued if HPRDIAG=YES is specified.

smoothed_time is the current smoothed round trip time, in milliseconds, for this Rapid Transfer Protocol (RTP). If that time is less than one millisecond, it will be rounded up to one millisecond in this message display.

IST1852I

This message is issued if HPRDIAG=YES is specified.

liveness is the value of the liveness timer, in seconds. The liveness timer specifies how long to wait without receipt of an NLP from the connection partner before sending a liveness message to verify that the connection is still operational.

IST1853I

This message is issued if HPRDIAG=YES is specified.

outofsequence is the number of network layer packets (NLPs) on the out-of-sequence queue.

IST1854I

This message is issued if HPRDIAG=YES is specified.

inboundsegs is the number of network layer packets (NLPs) on the inbound segments queue.

IST1855I

sessions is the number of sessions that are currently using this Rapid Transfer Protocol (RTP).

IST1856I

This message is issued if HPRDIAG=YES is specified and a path switch has occurred for this Rapid Transfer Protocol (RTP). It is the first of a subgroup of messages that includes one of the following messages: IST1817I, IST1818I, IST1819I, IST1820I, IST1821I, and IST1822I. The date and time are displayed for the last path switch occurrence.

date is the date of the last path switch occurrence. The format of date is based on the DATEFORM start option and can be one of the following:

DATEFORM|DATEFRM=DMY
date is **DD/MM/YY**.

DATEFORM|DATEFRM=MDY (default)
date is **MM/DD/YY**.

DATEFORM|DATEFRM=YMD
date is **YY/MM/DD**.

time is the time of the last path switch occurrence. The time is expressed in 24-hour system (hh:mm:ss). For example, 1:00 p.m. is displayed as 13:00:00.

IST1857I

This message is issued if HPRDIAG=YES is specified. It is a header message for the information displayed in IST1858I and IST1859I.

IST1858I

This message is issued if HPRDIAG=YES is specified. It is a header message for the information displayed in IST1859I.

IST1859I

This message is issued if HPRDIAG=YES is specified. It displays the number of times that this Rapid Transfer Protocol (RTP) has gone into backpressure (holding up outbound data transmission) for each of the following reasons:

pathswitch is the number of times that this RTP has gone into backpressure due to path switch.

sendqmax is the number of times that this RTP has gone into backpressure due reaching the send queue maximum limit.

storfail is the number of times that this RTP has gone into backpressure due to a failure to obtain storage.

IST1860I

This message is issued if HPRDIAG=YES is specified.

sent is the count of the number of network layer packets (NLPs) that have been sent on this Rapid Transfer Protocol (RTP).

overflow is the number of times that the sent count has reached its maximum value. Each unit of *overflow* indicates that 4 294 967 296 NLPs have been sent in addition to the number given by *sent*.

IST1861I

This message is issued if HPRDIAG=YES is specified.

received is the count of the number of network layer packets (NLPs) that have been received on this Rapid Transfer Protocol (RTP).

overflow is the number of times that the received count has reached its maximum value. Each unit of *overflow* indicates that 4 294 967 296 NLPs have been received in addition to the number given by *received*.

IST1862I

This message is issued if HPRDIAG=YES is specified.

maximum is the Adaptive Rate-Based pacing (ARB) maximum send rate for this Rapid Transfer Protocol (RTP).

units is the units of measure for the rate and is displayed in bits, kilobits, or megabits per seconds (BITS/SEC, KBITS/SEC, or MBITS/SEC).

System Action: Processing continues.

Operator Response: None.

Programmer Response: None.

IST1477I ALLOWED DATA FLOW RATE = *allowed units*

Explanation: VTAM issues this message as part of a group of messages in response to a DISPLAY ID command for a PU type 2.1 representing a Rapid Transport Protocol (RTP) route.

The first message in the group is IST1476I. See the description of that message for more information.

IST1478I NUMBER OF UNACKNOWLEDGED BUFFERS = *buffers*

Explanation: VTAM issues this message as part of a group of messages in response to a DISPLAY ID command for a PU type 2.1 node representing a Rapid Transport Protocol (RTP) route.

The first message in the group is IST1476I. See the description of that message for more information.

IST1479I RTP CONNECTION STATE = *state* **- MNPS =** *mnps*

Explanation: VTAM issues this message as part of a group of messages in response to a DISPLAY ID command for a type 2.1 node representing a Rapid Transport Protocol (RTP) route.

The first message in the group is IST1476I. See the description of that message for more information.

IST1480I RTP END TO END ROUTE - RSCV PATH

Explanation: VTAM issues this message as part of a group of messages in response to a DISPLAY ID command or a MODIFY RTP command.

- If DISPLAY ID is issued for a type 2.1 node representing a Rapid Transport Protocol (RTP) route, the first message is IST1476I. See the description for that message for more information.
- If MODIFY RTP is issued, the first message is IST1494I. See the description for that message for more information.

IST1481I DESTINATION CP *nodename* **– NCE** *nceid*

Explanation: VTAM issues this message as part of a group of messages in response to a DISPLAY ID command for a PU type 2.1 node representing a Rapid Transport Protocol (RTP) route.

The first message in the group is IST1476I. See the description of that message for more information.

IST1482I HPR = *hpr* **– OVERRIDE =***override* **– CONNECTION =***connection*

Explanation: VTAM issues this message as part of a group of messages in response to a DISPLAY ID command for a APPN capable PU type 2.1.

hpr, *override*, and *connection* indicates whether this PU or CDRM is capable of using Rapid Transport Protocols (RTP).

hpr can be **RTP**, **ANR**, or **NONE**.

override and *connection* can be **YES** or **NO**.

HPR corresponds with the HPR operand on the group, line, PU, or CDRM definition statement and the HPR start option.

HPR start option	HPR operand coded on the group, line, or PU definition statement		
	Default	No coded	Yes coded
None, None	None	None	None
ANR, None	None	None	ANR
RTP, None	None	None	RTP
ANR, ANR	ANR	None	ANR
RTP, ANR	ANR	None	RTP
RTP, RTP	RTP	None	RTP

The HPR capability of the PU or CDRM can be overridden by the *hpr* operand on the V ACT command for other than NONE coded on the HPR start option.

The HPR value for the CDRM is only valid when the CDRM is active, otherwise it reflects the value for the last time the CDRM was active or if never active, it will be none.

OVERRIDE is the value of the HPR operand on the V ACT command or N/A if not coded.

Link activation can change the HPR capability of the PU or CDRM for each activation of the link.

CONNECTION is the HPR capability of the PU or CDRM after the connection becomes active or N/A if no connection.

System Action: Processing continues.

Operator Response: None.

Programmer Response: None.

IST1483I DTEAD = *dteaddr* VNREVCHG = ACCEPT|REJECT

Explanation: VTAM issues this message as part of a group of messages in response to a DISPLAY ID command when a line was specified on the ID operand of the command.

A description of the message group follows:

```
IST1484I           vnnetid.vname               vngroup
IST1483I DETEAD = dteaddr     VNREVCHG = ACCEPT|REJECT
```

IST1484I

vnname is the network-qualified name in the form *netid.name*.

IST1483I

dteaddr is the DTE address that was specified on the DTEAD operand of the LINE definition statement for the NCP major node.

VNREVCHG specifies whether a node will accept or reject call request packets that indicate the destination node is to pay for the call.

System Action: Processing continues.

Operator Response: None.

Programmer Response: None.

IST1484I *vnnetid.vnname vngroup*

Explanation: VTAM issues this message as part of a group of messages in response to a DISPLAY ID command when a line was specified on the ID operand of the command.

This message will be issued when multiple connection networks have been defined and will immediately follow message IST1324I.

A description of the message group follows:

```
IST1324I  VNNAME = vnname            VNGROUP = vngroup
IST1484I           vnnetid.vname               vngroup
```

IST1324I

vnname is the connection network CP name that was specified on subfield 1 of the DLCADDR keyword of the LINE definition statement for the NCP major node.

vngroup is the name of the logical group that was specified on subfield 1 of the DLCADDR keyword operand of the LINE definition statement for the NCP major node. This group will be used to establish the link between the NCP major node and other adjacent nodes in the connection network.

IST1484I

vnname is the network-qualified name in the form *vnnetid.name*.

System Action: Processing continues.

Operator Response: None.

Programmer Response: None.

IST1485I **DLCADDR SUBFIELDS FOR** *name*

Explanation: VTAM issues this message as a header for a group of IST1318I messages in response to one of the following commands:

- A DISPLAY ADJCP command when the ID operand specifies the name of a X.25 virtual node and SCOPE=ALL is specified
- A DISPLAY ID command for an XCA major node group that defines a transmission group (TG) to an ATM native connection network.

A description of the message group follows:

```
 IST1485I DLCADDR SUBFIELDS FOR name
 IST1318I parameter_value
 IST1318I parameter_value
[IST1319I parameter_value]
⋮
 IST314I  END
```

IST1318I

parameter_value is the DLCADDR value specified on the LINE or GROUP definition statement. The message will appear as follows:

```
IST1318I yy,N'parameter_value'
```

N is the value specified on the DLCADDR keyword.

yy is the subfield ID.

If the DLCADDR value was coded in hexadecimal or binary coded decimal (BCD), *parameter_value* is displayed with a blank separating every 8 characters of data. If an odd number of digits was coded for the DLCADDR value, *parameter_value* will be padded on the left with a zero.

IST1319I

This message is used to display overflow information from *parameter_value* in IST1318I.

IST1485I

name identifies LINE or GROUP definition statement where the DLCADDR statements are coded.

System Action: Processing continues.

Operator Response: None.

Programmer Response: None.

IST1486I RTP NAME STATE DESTINATION CP MNPS TYPE

Explanation: VTAM issues this message as part of a group of messages in response to a DISPLAY ADJCP ID= command for an adjacent control point (ADJCP) that has a Rapid Transport Protocol (RTP) connected to it or in response to a DISPLAY ID= command where ID is the name of the RTP major node.

This message is the first in a group of messages and the full description of the message group follows:

```
IST1486I RTP NAME   STATE              DESTINATION CP  MNPS   TYPE
IST1487I puname     state              nodename        mnps   type
⋮
```

IST1486I

This message is a header message for the information displayed in message IST1487I.

IST1487I

puname is the RTP PU NAME of the adjacent link station (RTP ALS).

state is the connection state of the RTP and can be one of the following:

INITIAL
Initial state at startup time

ALS_PENDING
Waiting for adjacent link station processing

ALS_ASSIGNED
Adjacent link station processing is complete

OPENED
Initial state for active partner after startup

CALLING
Active partner sending connection setup to the passive partner

LISTENING
Initial state for passive partner after startup

CONNECTED
RTP is active

DISCONNECTED
Disconnect processing is complete and last message has been sent

DISCONNECT
Disconnect processing is in progress

PENDING_ACT
Waiting for activation to complete

PENDING_INACT
Waiting for inactivation to complete

PENDING_INACT
Waiting for inactivation to complete

PENDING TAKEOVR
Multinode persistent session application program planned takeover is in progress

RECOVERY
Multi-node persistent session application program recovery in progress

nodename is the destination partner's name in the form of *netid.name* for this RTP.

mnps indicates if the RTP connection is being used by an MNPS application and can be one of the following:

YES The RTP connection is being used by an MNPS application.

NO The RTP connection is not being used by an MNPS application.

type indicates the type of RTP connection and can be one of the following:
CPCP CP_CP RTP
RSTP Route_Setup RTP
LULU LU_LU RTP

System Action: Processing continues.

Operator Response: None.

Programmer Response: None.

IST1487I puname state nodename mnps type

Explanation: VTAM issues this message as part of a group of messages in response to a DISPLAY ADJCP ID command for an adjacent control point (ADJCP) that has a Rapid Transport Protocol (RTP) connected to it or in response to a DISPLAY ID= command where ID is the name of the RTP major node.

The first message in the group is IST1486I. See the explanation of that message for a complete description.

IST1488I *action* **OF RTP** *puname* **AS** *role* **TO** *cpnetid.cpname*

Explanation: This message is issued when a Rapid Transport Protocol (RTP) is activated or deactivated.

action is the process that caused this message to be issued.
ACTIVATION The RTP activation has been completed.
INACTIVATION The RTP inactivation has been completed.

puname is the RTP PU NAME by which VTAM knows the RTP adjacent link station (ALS).

role is the role of this partner in the RTP connection.
ACTIVE This partner initiated the activation of the RTP.
PASSIVE This partner did not initiate the activation of the RTP.

cpnetid.cpname is the network qualified cpname of the RTP partner.

System Action: Processing continues.

Operator Response: None.

Programmer Response: None.

IST1489I APING SESSION INFORMATION

Explanation: This message is the first in a group of messages that VTAM issues in response to a session startup due to the DISPLAY APING command. A complete description of the message group follows:

The following is an example of messages that could be issued in the message group.

```
IST1489I APING SESSION INFORMATION
IST1490I DLU=dluname SID=sid
IST933I  LOGMODE = logmode, COS = cosentry
IST875I  APPNCOS TOWARDS SLU = resource_name
IST1458I ORIGIN   ADJSUB   VR       TP       ER      REVERSE ER
IST1459I originsa destsa   vr       tp       er      rev_er
IST1460I TGN    CPNAME            TG TYPE       HPR
IST1461I tgn    cpname            tgtype        hpr
IST314I END
```

IST875I

resource_name is the APPN class-of-service (COS) name.

IST933

This message is part of message group IST879I or IST1489I.

IST1458I

This message is a header message for information displayed in IST1459I.

IST1490I

IST1459I

originsa is the originating subarea number.

destsa is the destination subarea number.

vr is the virtual route number.

tp is the transmission priority of the virtual route.

er is the number of the explicit route from APING to its partner TP.

rev_er is the number of the explicit route from APINGD to its partner TP.

IST1460I

This message is a header message for information displayed in IST1461I.

IST1461I

The route selection control vector (RSCV) is displayed for the route to the destination node of the partner TP. Multiple IST1461I messages might be needed to display the full route. There are cases where the entire route is not displayed to the node named on the ID operand of the DISPLAY APING command (when border nodes, interchange nodes, and LEN connections are on the session path). In these cases, IST1461I displays as much of the RSCV as is available.

tgn is the transmission group number.

cpname is the destination cpname for the transmission group.

Note: The *cpname* for a composite node might not always be correct. When an SSCP takeover occurs for an NCP in a composite node and the *cpname* was changed, the new *cpname* is not reflected in the display of the RTP end-to-end route.

tgtype is the transmission group type. Possible values are APPN, INTERCHANGE, VRTG, and ISL.

hpr corresponds with the HPR start option. The values for *hpr* are:

RTP indicates this VTAM provides RTP-level HPR support

ANR indicates this VTAM provides ANR-level HPR support

NA indicates the link to the next node is not HPR capable

Note: When a link in a particular route is not HPR capable, then the HPR capability for the next node cannot be determined.

IST1489I

This message is the first in a group of messages that display information about the newly activated VTAM APING session.

IST1490I

dluname is the name of the destination logical unit (DLU) with which the APING transaction occurs.

sid is the session identifier (SID) used to identify the session over which the APING transaction occurs. The value ***NA*** is displayed if the session identifier is not currently available to VTAM.

System Action: Processing continues.

Operator Response: None.

Programmer Response: None.

IST1490I DLU=*dluname* **SID=***sid*

Explanation: VTAM issues this message in response to a valid D NET,APING command to display the results of that command. It is part of two groups of messages.

The first messages in the groups are IST1457I and IST1489I. See the explanations of those messages for a complete description.

IST1493I RTP SUMMARY FOR *adjcpname* **COUNT =** *count*

Explanation: VTAM issues this message as part of a group of messages in response to a DISPLAY ID= command where ID is the name of the ADJCP (adjacent control point) major node or in response to a DISPLAY ADJCP ID= command.

adjcpname is the name of the adjaacent control point. If the network where the resource resides is known to VTAM, *adjcpname* is issued as a network-qualified name in the form netid.name.

count is the number of Rapid Transport Protocols (RTP) connected to this ADJCP. If no RTPs are active to this ADJCP, *count* will be equal to zero.

Note: The destination CP of the RTP is considered an ADJCP to this VTAM while there is at least one active RTP to it.

System Action: Processing continues.

Operator Response: None.

Programmer Response: None.

IST1494I PATH SWITCH *status* **FOR RTP** *puname*

Explanation: This message is the first in a group of messages that VTAM issues in response to an RTP path switch.

- If *status* is **COMPLETED**, the following message group is displayed:

```
IST1494I PATH SWITCH status FOR  RTP puname
IST1480I RTP END TO END ROUTE - RSCV PATH
IST1460I  TGN    CPNAME            TG TYPE      HPR
IST1461I  tgn    cpname            tgtype       hpr
:
IST314I   END
```

- If *status* is **FAILED**, the following message group is displayed:

```
IST1494I PATH SWITCH status FOR RTP puname
IST1495I NO ALTERNATE ROUTE AVAILABLE
IST314I   END
```

- If *status* is **STARTED**, the following message group is displayed:

```
 IST1494I PATH SWITCH status FOR RTP puname
[IST1817I PATH SWITCH REASON: RTP CONNECTION UNAVAILABLE]
[IST1818I PATH SWITCH REASON: SHORT REQUEST RETRY LIMIT EXHAUSTED]
[IST1819I PATH SWITCH REASON: TG INOP]
[IST1820I PATH SWITCH REASON: MODIFY RTP COMMAND ISSUED]
[IST1821I PATH SWITCH REASON: AUTO PATH SWITCH FOR PSRETRY]
[IST1822I PATH SWITCH REASON: UNKNOWN]
 IST314I   END
```

IST1460I

This message is a header message for information displayed in IST1461I.

IST1461I

tgn is the transmission group number.

cpname is the destination CP name for the transmission group.

tgtype is the transmission group type. The values for *tgtype* can be:

APPN

INTERCHANGE

VRTG

ISL

hpr corresponds with the HPR start option. The values for *hpr* can be:

RTP indicates this VTAM provides RTP-level HPR support

ANR indicates this VTAM provides ANR-level HPR support

NA indicates the link to the next node is not HPR capable

Note: When a link in a particular route is not HPR capable, then the HPR capability for the next node cannot be determined.

IST1480I

This message informs the operator that the messages that follow describe the RSCV end-to-end path of the RTP route. The RSCV path represents the route used to send data from the origin CP to the destination CP.

IST1494I

status is the outcome of VTAM attempting to do a path switch for the RTP being modified.

COMPLETED
VTAM was able to complete the path switch for the RTP being modified.

FAILED
VTAM was not able to complete the path switch for the RTP being modified.

STARTED
VTAM has begun the path switch for the RTP being modified.

puname is the RTP PU NAME of the adjacent link station (RTP ALS).

IST1495I

No alternate route could be established for the RTP, therefore, no path switch took place. The current RTP remains active.

IST1817I

The underlying physical connection or the RTP itself is not in a state suitable for RTP traffic.

IST1818I

The RTP partner is not responding to status requests initiated by this RTP endpoint. Each time a status request is sent to the partner a short request timer is set to timeout the transaction. If the short request timer expires and no response is received from the partner, the process is repeated. This process will repeat until the retry limit for the RTP pipe is exhausted. When the retry limit is met, a path switch is requested to try to restore communications with the RTP partner.

IST1819I

The physical connection that the RTP pipe traverses has suffered an INOP condition.

IST1820I

An operator has issued an F RTP command to force an RTP path switch.

IST1821I

The PSRETRY start option value is forcing an automatic path switch for this RTP connection.

IST1822I

The reason for the RTP path switch is unavailable.

System Action: Processing continues.

Operator Response: If *status* is **FAILED**, save the system log for problem determination and provide the files used for system definition.

Programmer Response: Use the output and system definition files provided to assist in determining the cause of the problem. (You might need to work with system programmers in other networks to determine the adjacent SSCP tables used in another network to define the system.)

IST1495I NO ALTERNATE ROUTE AVAILABLE

Explanation: This message is part of a group of messages that VTAM issues in response to an RTP path switch.

The first message in the group is IST1494I. See the description of that message for more information.

System Action: Processing continues.

Operator Response: None.

Programmer Response: None.

IST1496I DISPLAY APING FAILED - PRIOR APING IS EXECUTING

Explanation: VTAM cannot execute a DISPLAY APING command because a prior DISPLAY APING request is still executing. VTAM only allows one DISPLAY APING command to execute at a time.

System Action: VTAM rejects the command.

Operator Response: Reenter the command once the prior APING completes execution. See the *z/OS Communications Server: SNA Network Implementation Guide* for instructions on terminating the currently executing APING, should that become necessary.

Programmer Response: None.

IST1498I LOADING NCP FROM *source*

Explanation: VTAM issues this message as a result of a DISPLAY ID command for an NCP that is in PLOAD (Pending Load) status.

source indicates if the NCP is being loaded from the host or from the 3720 or 3745 Communication Controller external disk.

This message follows IST247I when the NCP is in the PLOAD state.

System Action: Processing continues.

Operator Response: None.

Programmer Response: None

IST1499I AHHC SUBCHANNEL *address state*

Explanation: This message is issued when the MVS status of a subchannel changes.

address is the subchannel address.

state is the subchannel address state, and can be one of the following:

ONLINE
An MVS VARY ONLINE command is issued for a subchannel and VTAM successfully completes activation for the subchannel.

OFFLINE.PENDING
An MVS VARY OFFLINE command is issued for a subchannel and VTAM and MVS are in the process of completing deallocation for the subchannel.

OFFLINE
Deactivation processing has completed and MVS acknowledges that the subchannel is OFFLINE.

REACCESSIBLE
An INOP situation occurs and MVS deactivates and then reactivates a subchannel without operator intervention.

System Action: Processing continues.

Operator Response: None.

Programmer Response: None.

IST1500I STATE TRACE = *status*

Explanation: This message is part of a subgroup of messages that VTAM issues in response to a DISPLAY ID command for a traceable node. It indicates whether the state of the resource specified on the ID parameter is being traced.

status will be **ON** or **OFF**. For more information, see the *z/OS Communications Server: SNA Operation*.

System Action: Processing continues.

Operator Response: None.

Programmer Response: None.

IST1501I XCF TOKEN = *token*

Explanation: VTAM issues this message as part of a message group in response to a DISPLAY ID=VTAM command or when a cross-system coupling facility (XCF) path to an adjacent node is no longer active. If message IST1504I precedes this message, refer to the description of IST1504I for a description of the message group.

This message is issued to inform the operator of the XCF token that MVS has assigned to VTAM. An XCF token identifies each VTAM in the MVS sysplex under XCF connectivity. Support personnel will use this message to correlate VTAM diagnostic information with MVS diagnostic information.

A description of the message group follows:

```
IST097I command ACCEPTED
IST075I NAME = nodename, TYPE = nodetype
IST1501I XCF TOKEN = token
```

IST075I

nodename is the name of the resource or ID type that is displayed.

IST097I

This message indicates that VTAM accepted the *command* for initial processing.

IST1501I

token is the XCF token MVS assigned to the adjacent VTAM.

System Action: Processing continues.

Operator Response: None.

Programmer Response: None.

IST1502I ADJACENT CP = *CP_name_of_other_side*

Explanation: This message is part of a message subgroup. The first message in the subgroup is IST1503I. See the explanation of that message for a complete description of the subgroup.

IST1503I XCF TOKEN = *token* **STATUS =** *status*

Explanation: VTAM issues this message in response to the DISPLAY TRL, TRLE=*trl_entry_name* or a DISPLAY ID=*trl_entry_name* command when *trle_name* is the name of the dynamically created TRLE that defines the XCF connection between two VTAMs. This message is also issued in response to a DISPLAY TRL, XCFCP=*cp_name* command.

When MPC connectivity exists, message IST1221I is normally displayed. XCF TRLE's do not have device addresses as MPC TRLEs have and thus, only the XCF token and the status of the XCF TRLE are displayed. Message IST1503I will be issued instead of message IST1221I to display XCF connection status. A description of the message group follows:

```
IST097I command ACCEPTED
IST075I NAME=name, TYPE=type
IST486I STATUS=currentstatus, DESIRED STATE=desiredstate
```

```
IST087I TYPE = line_type, CONTROL = line_control, HPDT = hpdtvalue
IST1503I XCF TOKEN = token     STATUS = status
IST1502I ADJACENT CP = CP_name_of_other_side
IST314I  END
```

IST075I

name is the name of the resource or ID type that is displayed.

See Chapter 15, “Node and ID types in VTAM messages” on page 697 for a description of *type*. **IST087I**

This message is part of several different message groups that VTAM issues in response to DISPLAY commands.

line_type is **LEASED**.

line_control is **XCF**.

hpdtvalue can be one of the following:

YES
Indicates the connection is capable of performing channel I/O directly to or from communications storage manager (CSM) buffers.

NO
Indicates the connection is not capable of performing channel I/O directly to or from communications storage manager (CSM) buffers.

NA
Is displayed when *line_control* is not MPC or when the connection is not active.

IST097I

This message indicates that VTAM accepted the *command* for initial processing.

IST486I

This message displays the status of the XCF TRLE entered on the DISPLAY command.

currentstatus is the current status of the node. See the *z/OS Communications Server: IP and SNA Codes* for a description of *currentstatus*.

desiredstate is the node state that is desired. See the *z/OS Communications Server: IP and SNA Codes* for a description of *desiredstate*. If VTAM cannot determine the desired state, *desiredstate* will be

IST1502I

CP_name_of_other_side identifies the CP name of the VTAM on the other side of this XCF connection which is represented by the TRLE in message IST075I.

IST1503I

token is the XCF token MVS assigned to the adjacent VTAM.

status is the condition or state of the XCF connection.

Valid values for the *status* are:

ACTIVE
Connection is active.

INOP Connection is inoperative.

RESET Connection is not ready.

System Action: Processing continues.

Operator Response: None.

Programmer Response: None.

IST1504I XCF CONNECTION WITH *cp_name* IS INOPERATIVE

Explanation: This message is the first message in a group of two messages that VTAM issues when a cross-system coupling facility (XCF) READ/WRITE path to an adjacent node is no longer active. This message provides information about a potential problem and can be used to correlate VTAM diagnostic information with MVS diagnostic information. This message can be issued prior to the deactivation of an XCF local SNA PU, prior to an XCF group exit, or prior to the deactivation of a dynamic local SNA major node indicating that XCF connectivity has been terminated for that CP.

A description of the message group follows:

IST1505I

```
IST1504I  XCF CONNECTION WITH cp_name IS INOPERATIVE
IST1501I  XCF TOKEN = token
```

IST1504I

cp_name is the network qualified CP name of the adjacent VTAM.

IST1501I

token is the XCF token MVS assigned to the adjacent VTAM.

System Action: Processing continues.

Operator Response:

You may want to reactivate the dynamic XCF local SNA PU or the dynamic local SNA major node (ISTLSXCF). Otherwise, no action is necessary.

You may want to save the system log for problem determination if the inoperative connection is critical to the network.

Programmer Response: None.

IST1505I TYPE = *type* **TOKEN =** *token*

Explanation: VTAM issues this message as part of a group of messages that display tuning statistics for XCF connections.

A description of the message group follows:

```
IST1230I TIME     = time     DATE     = date    ID = id
IST1231I IPDU     = ipdu     OPDU     = opdu
IST1232I TSWEEP   = tsweep   QSWEEP   = qsweep
IST924I  -------------------------------------------------------
IST1505I TYPE     = type     TOKEN    = token
IST1234I BSIZE    = bsize    MAXBYTES = maxbytes
IST1236I BYTECNTO = bytecnto BYTECNT  = bytecnt  DIR  = direction
IST1236I BYTECNTO = bytecnto BYTECNT  = bytecnt  DIR  = direction
:
IST314I  END
```

IST1230I

time is in the format hh:mm:ss:pp, where:
- *hh* is the hour
- *mm* is the minutes
- *ss* is the seconds
- *pp* is hundredths of a second.

date is the date that the record was reported.

IST1231I

ipdu is the total number of inbound PDU's received.

opdu is the total number of outbound PDU's sent.

IST1232I

tsweep is the number of sweeps initiated during a time-out.

qsweep is the number of sweeps initiated due to excessive receive queue depth.

IST1234I

bsize is the maximum buffer size supported by the device.

maxbytes is number of bytes used in the largest channel program.

IST1236I

bytecnto is the byte count overflow.

bytecnt is the byte count.

direction is the direction of data flow over this device. *direction* can be either SENT or RECEIVED.

IST1505I

type is **XCF**.

token is the XCF token MVS assigned to the adjacent VTAM.

System Action: Processing continues.

Operator Response: To discontinue statistic recording, enter the MODIFY NOTNSTAT command.

Programmer Response: For additional information on tuning and analyzing tuning statistics, see the *z/OS Communications Server: SNA Network Implementation Guide*.

IST1506I *command* **FAILED FOR** *nodename* **- MEMBER LEAVING GROUP**

Explanation: An operator issues a VARY ACT to activate the local SNA PU. A deactivation request is received. VTAM issues this message to indicate the activation of the local SNA PU has failed because a deactivation request was received. The VTAM represented by the PU leaves the XCF group.

command is always **VARY ACT.**

nodename is the name specified for ID that is always a dynamic local SNA PU.

System Action: VTAM rejects the command.

Operator Response: None

Programmer Response: None.

IST1507I VR-BASED TG NOT SUPPORTED

Explanation: VTAM issues this message as part of a group of messages. The first message in the group is IST1110I. See the explanation of that message for a complete description.

IST1508I CP-CP SESSIONS ON VR-BASED TG NOT SUPPORTED

Explanation: VTAM issues this message as part of a group of messages. The first message in the group is IST1110I. See the explanation of that message for a complete description.

IST1509I *new_dlogmod* **UNKNOWN BUT ACCEPTED -- PREVIOUS VALUE WAS** *old_dlogmod*

Explanation: VTAM issues this message in response to a MODIFY DEFAULTS command and a MODIFY RESOURCE command which has successfully associated the *new_dlogmod* with the resource specified in the MODIFY command even though the *new_dlogmod* is not known to VTAM.

new_dlogmod is the new DLOGMOD value that is assigned to the resource.

old_dlogmod is the previous DLOGMOD value for the resource. *old_dlogmod* might not be known; it is only the previous value assigned to the resource.

System Action: None.

Operator Response: Verify that the value specified for DLOGMOD is valid. You might need to modify the logon mode table (MODETAB) to include the new logon mode entry (DLOGMOD).

The previous value for DLOGMOD can be used to reset the resource's DLOGMOD value. Be aware that the previous DLOGMOD value might be known. Since MODIFY DEFAULTS and MODIFY RESOURCE changes the value regardless of whether the new DLOGMOD is known, the value could be from a previous command. Also, no verification of the DLOGMOD value is performed during system definition.

Programmer Response: None.

IST1510I LLERP = *llerp* **– RECEIVED =** *received*

Explanation: VTAM issues this message as part of a group of messages in response to a DISPLAY ID command for an HPR-capable PU.

LLERP (link level error recovery procedure) is the LLERP capability of this PU as sent in the XID when the connection was established.

RECEIVED is the LLERP capability of the adjacent node's PU as received on the XID when the connection was established.

The values for *llerp* are:

required
llerp is required

notpref
llerp is not preferred but will be used if partner requires it.

The values for *received* are:

required
llerp is required

notpref
llerp is not preferred, but will be used if a partner requires it.

notallow
llerp is not allowed on this connection.

HPR start option	LLERP operand coded on the PU statement		
	default	notpref	required
NONE	LLERP is not valid		
ANR	notpref	notpref	required
RTP	required	required	required

The HPR capability of the PU will be forced to NO if **REQUIRED** is specified for *llerp* and **NOTALLOW** is specified for *received*.

System Action: Processing continues.

Operator Response: None.

Programmer Response: None.

IST1511I MAXIMUM NETWORK LAYER PACKET SIZE = *size* **BYTES**

Explanation: VTAM issues this message as part of a group of messages in response to a DISPLAY ID command for a PU type 2.1 node representing a Rapid Transport Protocol (RTP) route.

The first message in the group is IST1476I. See the description of that message for more information.

IST1512I *lan_operation* **FAILED - CODE X'***return_code* **– CUA** *channel_unit_address*

Explanation: VTAM issues this message when an error condition has been detected for local area network (LAN).

lan_operation is the name of the LAN operation that failed.

return_code is a 4-digit hexadecimal code. See the *z/OS Communications Server: IP and SNA Codes* for a description of *return_code.*

channel_unit_address is the channel device address of the port in error.

System Action: VTAM does not perform the request.

Operator Response: Enter a DISPLAY NET,ID=*name*,E to display the xca major node and its resources. Save the system log for problem determination.

Programmer Response: Refer to the *z/OS Communications Server: IP and SNA Codes*.

Note: If *lan_operation* is ACTIVATE_SAP_CONFIRM, and *return_code* is 763A or 7658, verify that no XCA PORT definition statement includes too many lines. These lines can be explicitly defined by either the LINE definition statements or by the AUTOGEN parameter on the GROUP definition statement. The total number of lines under a PORT cannot exceed 255; or if OF/2 is being utilized in the D/T3172 IBM Interconnect Controller, then the total number of lines cannot excede 245. If multiple GROUP definition statements are defined under a PORT definition statement, then the total number of lines is the sum of the number of lines defined explicitly or by the AUTOGEN parameters on the GROUP definition statements.

IST1513I *lan_operation* **FAILED –** *reason*

Explanation: VTAM issues this message when an error condition has been detected for a local area network (LAN).

lan_operation is the abbreviated name of the LAN operation that failed.

reason indicates the cause of the error and can be:

PORT TIMER LESS THAN LLC REPLY TIMER
The TIMER value on the PORT definition statement in the XCA major node is less than the result of the REPLY TIMER (T1) times the maximum number of transmissions (N2), specified on the system parameters of the IBM 3172 Interconnect Controller.

System Action: VTAM does not perform the request.

Operator Response: Save the system log for problem determination.

Programmer Response: Adjust timer value on the port statement in the XCA major node to be greater than the T1 reply time defined in the IBM 3172 Interconnect Controller.

IST1514I SUBAREA COS APPNCOS

Explanation: This message is part of a group that VTAM issues in response to a DISPLAY SATOAPPN command. See the explanation of message IST1321I for a complete description of the message group.

IST1515I *tracetype* **TRACE ACTIVE**

Explanation: VTAM issues this message when a buffer, I/O, module, or resource state trace is activated. If message IST199I follows this message, refer to the explanation of that message for a complete description of the group.

If message IST199I does not follow this message, *tracetype* is either **BUFFER** or **IO**.

IST1516I INITIAL DATA FLOW RATE = *initial units*

Explanation: VTAM issues this message as part of a group of messages in response to a DISPLAY ID command for a PU type 2.1 node representing a Rapid Transport Protocol (RTP) route.

The first message in the group is IST1476I. See the description of that message for more information.

IST1517I LIST HEADERS = *list_hdrs* **– LOCK HEADERS =** *lock_ents*

Explanation: This message is part of a group of messages VTAM issues in response to a DISPLAY STATS,TYPE=CFS command. The first message in the group is IST1370I. See the explanation of that message for a complete description.

IST1518I BASE STRUCTURE IS *strname*

Explanation: This message is part of a group of messages VTAM issues in response to a DISPLAY STATS,TYPE=CFS command. The first message in the group is IST1370I. See the explanation of that message for a complete description.

IST1519I ALTERNATE STRUCTURES ARE:

Explanation: This message is part of a group of messages VTAM issues in response to a DISPLAY STATS,TYPE=CFS command. The first message in the group is IST1370I. See the explanation of that message for a complete description.

IST1520I SUBAREA SEARCH INFORMATION:

Explanation: This message is part of several subgroups of messages that VTAM issues in response to a DISPLAY SRCHINFO command. See the explanation of messages IST1521I, IST1523I, or IST1531I for a complete description of the message subgroups.

IST1521I *sscp_dir* **NAME CDINIT DSRLST IOCD INTOTH TOTAL**

Explanation: This message is the first of a subgroup of messages issued in response to a DISPLAY SRCHINFO,LIST=SUMMARY command. The OLU, DLU, LU1, LU2, FROMCP, FROMSSCP, TOCP, and TOSSCP operands might have been used to limit the output displayed in the subgroup. A complete description of the message subgroup follows:

```
IST350I   DISPLAY TYPE = SRCHINFO
IST1520I  SUBAREA SEARCH INFORMATION:
IST1521I    sscp_dir NAME       CDINIT    DSRLST    IOCD    INTOTH   TOTAL
IST1522I    sscpname            cdinit    dsrlst    iocd    intoth   total
:
IST1525I  TOTAL NUMBER OF OUTSTANDING SEARCHES = srchcnt
IST1454I  count SSCPNAME(S) DISPLAYED
IST924I   ----------------------------------------------------------------
IST1526I  APPN SEARCH INFORMATION:
IST1527I    cp_dir NAME      TYPE STATUS BROADCAST DIRECTED  TOTAL
IST1528I    cpname           type status broadcast directed  total
:
IST1525I    TOTAL NUMBER OF OUTSTANDING SEARCHES = srchcnt
IST1454I  count CPNAMES(S) DISPLAYED
IST314I   END
```

IST1454I

The value for *count* can be:

– The sum of CP names displayed in IST1528I messages for the APPN message subgroup.

– The sum of SSCP names displayed in IST1522I messages for the subarea message subgroup.

IST1520I

This message is a header message for the subarea messages that follow. Subarea information is only provided if TYPE=SUBAREA or TYPE=ALL was specified on the DISPLAY SRCHINFO command.

IST1521I

This message is a header message for the information displayed in IST1522I.

The value for *sscp_dir* can be:

FROMSSCP
The FROMSSCP operand was specified on the DISPLAY SRCHINFO command.

TOSSCP
The TOSSCP operand was specified, or neither FROMSSCP nor TOSSCP was specified, on the DISPLAY SRCHINFO command.

IST1522I

One IST1522I message will be issued for each unique SSCP with an outstanding CDINIT, DSRLST, Init_Other CD, or Init_Other RU.

A DISPLAY SRCHINFO,LIST=ALL command can provide additional information about the outstanding RUs.

sscpname is the originating SSCP of the search request if FROMSSCP was specified, the name of the destination SSCP if TOSSCP was specified.

cdinit is the decimal number of outstanding CDINIT RUs.

dsrlst is the decimal number of outstanding DSRLST RUs.

iocd is the decimal number of outstanding Init_Other CD RUs.

intoth is the decimal number of outstanding Init_Other RUs.

total is the total in decimal of the *cdinit*, *dsrlst*, *iocd* and *intoth* columns.

IST1525I

In the subarea message subgroup, *srchcnt* is the decimal total of the *total* columns in all of the IST1522I messages for SSCPs.

In the APPN message subgroup, *srchcnt* is the decimal total of the *total* columns in all of the IST1528I messages for CPs.

This message is not displayed if the MAX operand value from the DISPLAY SRCHINFO command has been exceeded.

IST1526I

This message is a header message for the APPN messages that follow. APPN information is only provided if TYPE=APPN or TYPE=ALL was specified on the DISPLAY SRCHINFO command.

IST1527I

This message is a header message for the information displayed in IST1528I.

The value for *cp_dir* can be:

FROMCP
The FROMCP operand was specified on the DISPLAY SRCHINFO command.

TOCP The TOCP was specified, or neither the FROMCP nor TOCP operand was specified, on the DISPLAY SRCHINFO command.

IST1528I

One IST1528I message will be issued for each CP with at least one outstanding search request.

A DISPLAY SRCHINFO,LIST=ALL command can provide additional information about the outstanding searches.

cpname is the network-qualified name of a CP with an outstanding search request. If TOCP is specified, *cpname* is the destination of the search request. If FROMCP is specified, *cpname* is the origin of the search request.

type is the node type for the adjacent CP. The values for *type* can be:
EN *cpname* is an end node.
NN *cpname* is a network node.

status is the current congestion status of the adjacent CP. The values for *status* can be:
OPEN APPN Locates are being sent to this *cpname*.
HELD APPN Locate searches are not being sent to this *cpname*.

broadcast is the decimal number of broadcast locates (for example, INN, EN, NN) outstanding for this adjacent CP.

directed is the decimal number of directed locates outstanding for this adjacent CP.

total is the decimal number of locates outstanding for this adjacent CP, including directed, broadcast, and other types of locates.

Operator Response: Issue the DISPLAY SRCHINFO command multiple times. If there is no change in the number of searches outstanding to a particular node, or if the count only increases, the node may not be responding to search requests. Issue a DISPLAY SRCHINFO,LIST=ALL,TOCP=*xxxxxxxx*,TOSSCP=*xxxxxxxx* command where:

xxxxxxxx is the *sscpname* in IST1522I or the *cpname* in IST1528I.

IST1522I *sscpname cdinit dsrlst iocd intoth total*

Explanation: This message is part of a subgroup of messages that VTAM issues in response to a DISPLAY SRCHINFO,LIST=SUMMARY command. The first message of the subgroup is IST1521I. See the explanation of that message for a complete description of the message subgroup.

IST1523I OLU DLU SID RU

Explanation: This message is the first of a subgroup of messages issued in response to a DISPLAY SRCHINFO,LIST=ALL command. The OLU, DLU, LU1, LU2, FROMCP, FROMSSCP, TOCP, and TOSSCP operands might have been used to limit the output displayed in the subgroup. A complete description of the message subgroup follows.

```
IST350I   DISPLAY TYPE = SRCHINFO
IST1520I  SUBAREA SEARCH INFORMATION:
IST1523I         OLU               DLU                SID     RU
IST1524I         olu               dlu                sid     rutype
:
IST1454I  count REQUEST(S) DISPLAYED
```

IST1523I

```
IST924I   ---------------------------------------------------------------
IST1526I  APPN SEARCH INFORMATION:
IST1529I         OLU               DLU              SID     LOCATE
IST1530I         olu               dlu              sid     locates
:
IST1525I  TOTAL NUMBER OF OUTSTANDING SEARCHES = srchcnt
IST1454I  count REQUEST(S) DISPLAYED
IST314I   END
```

IST1454I

One message is displayed for each outstanding search request.

In the subarea message subgroup, *count* is the decimal number of IST1524I messages displayed.

In the APPN message subgroup, *count* is the decimal number of IST1530I messages displayed.

IST1520I

This message is a header message for the subarea messages that follow. Subarea information is only provided if TYPE=SUBAREA or TYPE=ALL was specified on the DISPLAY SRCHINFO command.

IST1523I

This message is a header message for the information displayed in IST1524I.

IST1524I

olu is the network-qualified name of the LU originating the search request.

– If *rutype* is IOCD, *olu* is the name of the secondary LU.

– In mixed configurations involving both subarea and APPN nodes, *olu* may be the name of a host as the search request is transferred between the subarea and APPN components of the various VTAMs.

dlu is the network-qualified name of the LU that is the destination of the search request.

– If the search request for the DLU has been forwarded to ISTAPNCP or to another internal component of VTAM, the DLU name will be that of the host the DISPLAY SRCHINFO command was issued on. In such a case, multiple IST1524I messages may be displayed — one for the OLU to the host and another for the OLU to the DLU.

– If *rutype* is IOCD, *dlu* is name of the primary LU.

sid is the session identifier (SID) for the search request. The SID is also known as the procedure correlation identification (PCID). If the PCID is unavailable, the value for *sid* is ******NA******. For example, if an INQUIRE APPSTAT is issued, the DSRLST shown represents an internal flow between two VTAM components, with the second component assigning the PCID.

rutype is the type of request unit represented by the search request. The value for *rutype* can be:

CDINIT
: Cross-domain Initiate

DSRLST
: Directed Search List

IOCD Init_Other CD

INTOTH
: Init_Other

****NA**** This search is concentrated behind another search request. Information about the other search can be found by issuing a DISPLAY SRCHINFO,SID=*sid* command.

Note that the Init_Other CD RU is called “CDINIT OTH” in IST530I messages and “IOCD” in IST1524I messages.

The *sid* value can be used in a DISPLAY SRCHINFO,SID=*sid* command to obtain additional information about a particular search.

IST1525I

srchcnt is the total of the *locates* column in all of the IST1530I messages, expressed as a decimal number.

This message is **not** displayed if the MAX operand value on the DISPLAY SRCHINFO command has been exceeded.

IST1526I

This message is a header message for the APPN messages that follow. APPN information is only provided if TYPE=APPN or TYPE=ALL was specified on the DISPLAY SRCHINFO command.

IST1529I

This message is a header message for the information displayed in IST1530I.

IST1530I

One message is displayed for each outstanding search request. The searches displayed by IST1530I are ordered from the newest to the oldest request.

olu is the network-qualified name of the LU originating the search request. *olu* is ****NA**** for an intermediate network node (INN) on a directed search.

dlu is the network-qualified name of the LU that is the destination of the search request. *dlu* is ****NA**** for an INN on a directed search.

sid is the session ID (SID) for the search request. The SID is also known as the procedure correlation identification (PCID).

locates is the decimal number of locates pending for the session. A value of 0 for *locates* indicates that the search request is concentrated behind another search for the same destination LU, initiated by the host CP.

The *sid* value can be used in a DISPLAY SRCHINFO,SID=*sid* command to obtain additional information about a particular search.

Operator Response: If initiation of a specific session is hanging, issue DISPLAY SRCHINFO,PCID and DISPLAY ID=name,E for the specific session. A VARY TERM command may be needed to terminate the hanging session.

If multiple searches are pending to a specific adjacent node, perform diagnosis on that node to determine the reason the searches are not being processed. If that adjacent node is VTAM, DISPLAY SRCHINFO,LIST=ALL and DISPLAY SRCHINFO,PCID commands can be issued from that host to determine the cause of the hang. If the adjacent node is not a VTAM, consult the product specific documentation. VARY TERM,SID can be issued to session request

---

IST1524I *olu dlu sid rutype*

Explanation: This message is part of a subgroup of messages that VTAM issues in response to a DISPLAY SRCHINFO,LIST=ALL command. The first message of the subgroup is IST1523I. See the explanation of that message for a complete description of the subgroup.

IST1525I **TOTAL NUMBER OF OUTSTANDING SEARCHES =** *srchcnt*

Explanation: This message is part of a subgroup of messages that VTAM issues in response to a DISPLAY SRCHINFO command. The first message of the subgroup is either IST1521I or IST1523I. See the explanation of those messages for a complete description of the subgroup.

IST1526I **APPN SEARCH INFORMATION:**

Explanation: This message is part of a subgroup of messages that VTAM issues in response to a DISPLAY SRCHINFO command. The first message of the subgroup is IST1521I, IST1523I, or IST1531I. See the explanation of those messages for a complete description of the subgroup.

IST1527I *cp_dir* **NAME TYPE STATUS BROADCAST DIRECTED TOTAL**

Explanation: This message is part of a subgroup of messages that VTAM issues in response to a DISPLAY SRCHINFO,LIST=SUMMARY command. The first message of the subgroup is IST1521I. See the explanation of that message for a complete description of the subgroup.

IST1528I *cpname type status broadcast directed total*

Explanation: This message is part of a subgroup of messages that VTAM issues in response to a DISPLAY SRCHINFO,LIST=SUMMARY command. The first message of the subgroup is IST1521I. See the explanation of that message for a complete description of the subgroup.

IST1529I **OLU DLU SID LOCATE**

Explanation: This message is part of a subgroup of messages that VTAM issues in response to a DISPLAY SRCHINFO,LIST=ALL command. The first message of the subgroup is IST1523I. See the explanation of that message for a complete description of the subgroup.

IST1530I *olu dlu sid locates*

Explanation: This message is part of a subgroup of messages that VTAM issues in response to a DISPLAY SRCHINFO,LIST=ALL command. The first message of the subgroup is IST1523I. See the explanation of that message for a complete description of the subgroup.

IST1531I **SID =** *sid* **CP(OLU) =** *origcp*

Explanation: This message is the first of a subgroup of messages that VTAM issues in response to a DISPLAY SRCHINFO,SID command.

Possible message subgroups follow. Note that the group will be displayed if the SID can be located, even if no search is outstanding. This means this group will be displayed if DISPLAY SRCHINFO,SID is issued using a SID for an active session, for example.

- If search information can be found in the subarea network, VTAM issues the following messages:

```
 IST350I   DISPLAY TYPE = SRCHINFO
 IST1520I  SUBAREA SEARCH INFORMATION:
 IST1531I    SID = sid                             CP(OLU) = origcp
 IST1532I    OLU = oluname                         DLU = dluname
 IST1540I    SEARCH STATUS = status                SSCP(OLU) = sscpolu
[IST1539I   PCID MODIFIER = pcidmod]
 IST1534I    SSCP/CP IN OLU DIRECTION = dirolu
 IST1533I    SEARCH CONCENTRATED = conc             RDS = rds
[IST1536I   CONCENTRATED BEHIND conc_pcid conc_mod]
[IST1543I   REQUESTS CONCENTRATED BEHIND THIS SEARCH = nbr_conc]
[IST1705I SORDER = so_value FROM START OPTION]
[IST1704I SORDER = so_value FROM ADJACENT SSCP TABLE]
[IST894I   ADJSSCPS TRIED   FAILURE SENSE    ADJSSCPS TRIED   FAILURE SENSE
 IST895I        sscpname         sense            sscpname         sense

⋮
 IST1454I count ADJSSCPS DISPLAYED]
[IST1537I  AWAITING REPLY FROM THE FOLLOWING NODE(S):
 IST1538I           name        name        name]
```

  Note: IST1704I and IST1705I are displayed only when VTAM is enabled for APPN. They are never both displayed in the same message group.

- If search information can be found in the subarea network, but no adjacent SSCP routing information is available, VTAM issues the following messages:

```
 IST350I   DISPLAY TYPE = SRCHINFO
 IST1520I  SUBAREA SEARCH INFORMATION:
 IST1531I    SID = sid                             CP(OLU) = origcp
 IST1532I    OLU = oluname                         DLU = dluname
 IST1540I    SEARCH STATUS = status     SSCP(OLU) = sscpolu
[IST1539I   PCID MODIFIER = pcidmod]
 IST1534I    SSCP/CP IN OLU DIRECTION = dirolu
 IST1533I    SEARCH CONCENTRATED = conc             RDS = rds
[IST1536I   CONCENTRATED BEHIND conc_pcid conc_mod]
```

```
[IST1543I   REQUESTS CONCENTRATED BEHIND THIS SEARCH = nbr_conc]
 IST1542I    NO ADJSSCP ROUTING INFORMATION AVAILABLE
[IST1537I   AWAITING REPLY FROM THE FOLLOWING NODE(S):
 IST1538I           name        name        name]
```

- If search information can be found in the APPN network, VTAM issues the following messages alone or following the subarea message subgroup with an IST924I separator message.

```
 IST1526I  APPN SEARCH INFORMATION:
 IST1531I    SID = sid                             CP(OLU) = origcp
 IST1532I    OLU = oluname                         DLU = dluname
 IST1539I    PCID MODIFIER = pcidmod
 IST1545I    NODE ROLE VECTOR = role
 IST1541I    LOCATES PENDING = locates             CURRENT TASK = task
 IST1533I    SEARCH CONCENTRATED = conc             RDS = rds
[IST1548I   BROADCAST = bdcst      DIRECTED = drctd]
 IST1534I    SSCP/CP IN OLU DIRECTION = dirolu
 IST1535I    REPLY RETURNED TO ORIGINATING CP = reply
[IST1536I   CONCENTRATED BEHIND conc_pcid conc_mod]
[IST1543I   REQUESTS CONCENTRATED BEHIND THIS SEARCH = nbr_conc]
[IST1537I   AWAITING REPLY FROM THE FOLLOWING NODE(S):
 IST1538I            name            name            name
 :
 IST1454I  node_cnt NODE(S) DISPLAYED]
```

IST894I

This message is a header for the information displayed in IST895I.

IST895I

This message is issued when adjacent SSCP routing is in progress. An IST895I message is issued for each SSCP, in the order it was tried, until all adjacent SSCP routing information has been displayed or until the MAX operand value on the DISPLAY SRCHINFO command has been reached.

sscpname is the adjacent SSCP through which trial-and-error routing was attempted.

sense is the sense code indicating the cause of failure.

IST1454I

The value for *count* can be:

– The total number of adjacent SSCPs, in decimal, displayed in the IST895I messages.

– The total number of adjacent CPs, in decimal, displayed in the IST1538I messages.

IST1520I

This message is a header for the subarea messages that follow. Subarea information is provided if TYPE=SUBAREA or TYPE=ALL was specified on the DISPLAY SRCHINFO command.

IST1526I

This message is a header for the APPN messages that follow. APPN information is provided if TYPE=APPN or TYPE=ALL was specified on the DISPLAY SRCHINFO command.

IST1531I

sid is the session ID (SID) for the session. The session ID, also known as the procedure correlation ID (PCID), is applicable to both APPN and subarea searches.

origcp is the name of the control point for the LU that originated the search request. If *origcp* is ISTAPNCP, the search request was passed from the APPN component of this host to the subarea component. In mixed environments involving both subarea and APPN nodes, *origcp* could be the name of a host involved in transferring the search request between APPN and subarea (for example, in a subarea search initiated by a central directory server (CDS)).

IST1532I

oluname is the network-qualified name of the LU that is originating the search request. If known, the OLU's real name is shown. Otherwise, ***NA*** is shown.

IST1531I

dluname is the network-qualified name of the LU that is the destination of the session request. If known, the DLU's real name is shown. Otherwise, the DLU alias name is shown.

IST1533I

The values for *conc* can be:

YES Search is concentrated behind a scout search, attempting to locate a specific resource.
NO Search is not concentrated behind a scout search, attempting to located a specific resource.

The values for *rds* can be:

YES This is a resource discovery search (RDS), a type of scout search.
NO This is not a resource discovery search (RDS).

IST1534I

This message gives the name of the adjacent CP or SSCP (*dirolu*) in the direction of the originating LU (OLU).

IST1535I

The values for *reply* can be:

YES If a positive reply was returned towards the parent CP.
NO If a positive reply was not returned towards the parent CP.

IST1536I

This message is issued only if CONCENTRATED=YES in IST1533I.

conc_pcid is the procedure correlation ID (PCID) of the scout search behind which this search is concentrated.

conc_mod is the PCID modifier of the scout search behind which this search is concentrated.

IST1537I

This message is issued only if CONCENTRATED = NO in IST1533I. It is a header message for the information displayed in IST1538I.

IST1538I

In the subarea message subgroup:

name is the network-qualified name of an SSCP from which this search is awaiting a reply. If the name is ISTAPNCP, the host is awaiting a response from a search of the APPN network.

In the APPN message subgroup:

name is the network-qualified name of a control point from which this search is awaiting a reply. If a host appears to be awaiting a reply from itself, as shown by *name* in IST1538I, the host is awaiting a response from a search of the subarea network.

IST1539I

pcidmod is the procedure correlation ID (PCID) modifier to the PCID in IST1531I.

IST1540I

status is the status of the search request. See in the *z/OS Communications Server: IP and SNA Codes* for list of *status* values.

sscpolu is the name of the SSCP originating the search request. Note that this may not be the CP(OLU) if the network consists of both subarea and APPN nodes.

IST1541I

locates is the number of Locates outstanding for this PCID.

task is the current task being performed on behalf of the search. The value for *task* can be:

Value	Meaning
X'00'	Null task
X'01'	Directory Services Management Exit
X'02'	Directory services database query
X'03'	Topology and routing services database query
X'04'	Forward to network node server

X'05' One hop if directory services database is found (i.e. a directed search to an End Node)
X'06' One hop if control vector X'0E' is received for request
X'07' Non-Verify attempt
X'08' Directed due to network node destination LU hierarchy received on a search request
X'09' Directed if directory services database is found
X'0A' Directed if the topology and routing services valid route selection CV is returned
X'0B' Directed if information is learned from scout search
X'0C' Directed to a directory server
X'0D' Directed to a higher function directory server
X'0E' Directed to a directory server retry
X'0F' Directed to a gateway node
X'10' Sequential directed search to alternate directory servers
X'11' Sequential directed search to interchange node
X'12' Subarea symbol resolution table (SRT) cache search
X'13' Subarea search after a positive cache search
X'14' Subarea search after a positive directory services directory entry database query
X'15' Subarea search after a negative or no cache search
X'16' Domain Broadcast search
X'17' Originate network broadcast search
X'18' Forward network broadcast not originated by this node
X'19' One-hop search request due to end node destination LU hierarchy received on a search request
X'1A' A cross-subnetwork directed search due to information received on the original request
X'1B' A cross-network directed search due to information found in the directory services database
X'1C' A directed search due to information found in the topology and routing services database
X'1D' Sequential directed search with the intent of finding the resource cross-subnetwork
X'1E' Generic cache search
X'1F' A subarea search due to a SESS_INIT_INFO_RPY interprocess signal
X'20' A directed search due to a SEARCH_RPY interprocess signal following a positive CACHE_SEARCH_RPY interprocess signal
X'21' Directed search due to a SEARCH_RPY interprocess signal following a positive directory services database query
X'22' Directory services database query after resource discovery search found
X'23' Directed to Resource Selector Node (RSN)
X'3F' Post processing.

IST1542I

This message is issued when no adjacent SSCP routing information is available.

IST1543I

This message is issued when CONCENTRATED = NO appears in IST1533I and when the number of searches concentrated behind this search is nonzero.

nbr_conc is the number of other searches concentrated behind this scout search.

IST1545I

role is a hexadecimal representation of the node role vector for this search. More than one bit can be on.

Code	Description
X'8000'	CP originating LU
X'4000'	CP destination LU
X'2000'	NN originating LU
X'1000'	NN destination LU
X'0800'	Owning directory server
X'0400'	Alternate directory server
X'0200'	Intermediate network server
X'0100'	Intermediate network node (INN) directed.
X'0080'	Intermediate network node (INN) broadcast.
X'0040'	Intermediate network node (INN) on a request which requires border node processing.

IST1548I

The values for *bdcst* can be:

YES A broadcast search is in progress.
NO A broadcast search is not in progress.

The values for *drctd* can be:
YES A directed search is in progress.
NO A directed search is not in progress.

Note: Both *bdcst* and *drctd* can be YES at the same time (for example, a directed search from an end node that is turned into a broadcast search by the network node server (NNS)).

This message is only issued if CONCENTRATE = NO in IST1533I.

IST1704I or IST1705I

so_value indicates the search order associated with the search being displayed.

System Action: Processing continues.

Operator Response: None.

Programmer Response: None.

IST1532I **OLU =** *oluname* **DLU =** *dluname*

Explanation: This message is part of a subgroup of messages that VTAM issues in response to a DISPLAY SRCHINFO,SID command. The first message of the subgroup is IST1531I. See the explanation of that message for a complete description of the subgroup.

IST1533I **SEARCH CONCENTRATED =** *conc* **RDS =** *rds*

Explanation: This message is part of a subgroup of messages that VTAM issues in response to a DISPLAY SRCHINFO,SID command. The first message of the subgroup is IST1531I. See the explanation of that message for a complete description of the subgroup.

IST1534I **SSCP/CP IN OLU DIRECTION =** *dirolu*

Explanation: This message is part of a subgroup of messages that VTAM issues in response to a DISPLAY SRCHINFO,SID command. The first message of the subgroup is IST1531I. See the explanation of that message for a complete description of the subgroup.

IST1535I **REPLY RETURNED TO ORIGINATING CP =** *reply*

Explanation: This message is part of a subgroup of messages that VTAM issues in response to a DISPLAY SRCHINFO,SID command. The first message of the subgroup is IST1531I. See the explanation of that message for a complete description of the subgroup.

IST1536I **CONCENTRATED BEHIND** *conc_pcid conc_mod*

Explanation: This message is part of a subgroup of messages that VTAM issues in response to a DISPLAY SRCHINFO,SID command. The first message of the subgroup is IST1531I. See the explanation of that message for a complete description of the subgroup.

IST1537I **AWAITING REPLY FROM THE FOLLOWING NODE(S):**

Explanation: This message is part of a subgroup of messages that VTAM issues in response to a DISPLAY SRCHINFO,SID command. The first message of the subgroup is IST1531I. See the explanation of that message for a complete description of the subgroup.

IST1538I *name name name*

Explanation: This message is part of a subgroup of messages that VTAM issues in response to a DISPLAY SRCHINFO,SID command. The first message of the subgroup is IST1531I. See the explanation of that message for a complete description of the subgroup.

IST1539I PCID MODIFIER = *pcidmod*

Explanation: This message is part of a subgroup of messages that VTAM issues in response to a DISPLAY SRCHINFO,SID command. The first message of the subgroup is IST1531I. See the explanation of that message for a complete description of the subgroup.

IST1540I SEARCH STATUS = *status* **SSCP(OLU) =** *sscpolu*

Explanation: This message is part of a subgroup of messages that VTAM issues in response to a DISPLAY SRCHINFO,SID command. The first message of the subgroup is IST1531I. See the explanation of that message for a complete description of the subgroup.

IST1541I LOCATES PENDING = *locates* **CURRENT TASK =** *task*

Explanation: This message is part of a subgroup of messages that VTAM issues in response to a DISPLAY SRCHINFO,SID command. The first message of the subgroup is IST1531I. See the explanation of that message for a complete description of the subgroup.

IST1542I NO ADJSSCP ROUTING INFORMATION AVAILABLE

Explanation: This message is part of a subgroup of messages that VTAM issues in response to a DISPLAY SRCHINFO,SID command. The first message of the subgroup is IST1531I. See the explanation of that message for a complete description of the subgroup.

IST1543I REQUESTS CONCENTRATED BEHIND THIS SEARCH = *nbr_conc*

Explanation: This message is part of a subgroup of messages that VTAM issues in response to a DISPLAY SRCHINFO,SID command. The first message of the subgroup is IST1531I. See the explanation of that message for a complete description of the subgroup.

IST1544I DIAL OUT PURGE IN PROGRESS — ID = *nodename text*

Explanation: VTAM issues this message as part of a group of messages when a call collision occurs. Call collision occurs when a dial-in and a dial-out attempt to use the same line at the same time. The first message in the group is either IST680I or IST690I. See the explanation of those messages for a complete description.

IST1545I NODE ROLE VECTOR = *role*

Explanation: This message is part of a subgroup of messages that VTAM issues in response to a DISPLAY SRCHINFO,SID command. The first message of the subgroup is IST1531I. See the explanation of that message for a complete description of the subgroup.

IST1546I CDRM STATUS SUBAREA ELEMENT NETID SSCPID

Explanation: This message is part of a group of messages that VTAM issues in response to a DISPLAY command concerning the cross-domain resource manager (CDRM). This message is the result of one of the following:

- A DISPLAY ID command for a cross-domain resource manager major node
- A DISPLAY CDRMS command requesting information about cross-domain resource managers (CDRMS) defined to this domain.

```
IST1546I CDRM     STATUS    SUBAREA ELEMENT NETID     SSCPID
IST1547I cdrmname status    subarea element cdrmnetid sscpid
⋮
```

IST1546I

This message is a header for IST1547I.

IST1547I

This message is issued for each cross-domain resource.

cdrmname is the CDRM name.

status is the resource status.

subarea is the subarea address of the CDRM in decimal. If the subarea address is not available, *subarea* will be **N/A**.

element is the element address of the CDRM in decimal. If the element address is not available, *element* will be **N/A**.

cdrmnetid is the network ID of *cdrmname*.

sscpid is the SSCP identifier of the CDRM. *sscpid* will be displayed for a host CDRM and for an external CDRM with an SSCP-SSCP session with this host. *sscpid* is not available for a CDRM without an SSCP-SSCP session with this host and will be displayed as N/A.

IST1547I *cdrmname status subarea element cdrmnetid sscpid*

Explanation: This message is part of a group of messages that VTAM issues in response to a DISPLAY CDRMS or DISPLAY ID=cdrm_major_node command. See the description of IST1546I for a complete description of the message group.

IST1548I **BROADCAST =** *bdcst* **DIRECTED =** *drctd*

Explanation: This message is part of a group of messages that VTAM issues in response to a DISPLAY SRCHINFO,SID command. The first message of the group is IST1531I. See the explanation of that message for a complete description of the subgroup.

IST1549I **OWNER =** *owning_VTAM* **MNPS STATE =** *state*

Explanation: VTAM issues this message in response to a DISPLAY ID command when a multinode persistent application is specified and the application is not defined to the VTAM on which the command is issued, but is found in the multinode persistent session coupling facility structure.

owning_VTAM is the VTAM where the multinode persistent application last opened its ACB.

The application can be in one of the following states:

CLEANUP
The data related to this application is being cleaned up in the multinode persistent coupling facility structure.

DISABLED
The application OPENed its ACB and specified PERSIST=YES, but has not yet issued SETLOGON OPTCD=PERSIST. Data for the application is stored in the coupling facility structure in case the application chooses to enable persistence. However, sessions are not restored in the event of a failure.

ENABLED
The application has issued SETLOGON OPTCD=PERSIST. Multinode persistent sessions will be restored in the event of a failure.

RECOVERY PENDING
A failure of the VTAM owning the application has been detected. Wait for the application to recover.

SNPS RECOVERY PENDING
The application has failed, or issued CLOSE, while it was enabled for persistence. The application is now waiting for recovery on its owning VTAM or some other VTAM. In the event of subsequent failure of the owning VTAM, the sessions will be maintained and thus can be restored.

SUSPECT
The data associated with this application may be invalid; in the event of failure, the application's sessions will not be recovered. This may be caused by the following:

- The multinode persistent coupling facility structure containing the application's data is currently being rebuilt.
- The *owning_VTAM* has lost connectivity to the multinode persistent session structure containing the application's data.

TAKEOVER IN PROGRESS
The application is moving from one VTAM to another VTAM. The owning VTAM is the CP where the application is expected to end up. If the owning CP were to fail, sessions in this state would be maintained and could be recovered.

TERMINATE
The application has CLOSEd its ACB, in a non-persistent manner, on its owning VTAM, but not all the multinode persistent sessions or RTP connections have been terminated yet.

UNKNOWN STATE
The application is MNPS capable, but there is currently no local application status block (ASB) available for this VTAM to use to determine the MNPS state of the application. This will most likely occur when the application is attempting to move from one VTAM to this VTAM, but the ownership of the application has not yet been transferred between the VTAMs.

Operators can display the current application state from other VTAMs in the sysplex that are connected to the MNPS structure.

System Action: Processing continues.

Operator Response: None.

Programmer Response: None.

IST1550I MNPS STATE = *state*

Explanation: VTAM issues this message in response to a DISPLAY ID command when a multinode persistent (MNPS) application is specified, and the application is found on the VTAM on which the command is issued.

The application can be in one of the following states:

CLEANUP
The data related to this application is being cleaned up in the MNPS coupling facility structure.

DEFINED
The application was defined with PERSIST=M on the application definition statement, but VTAM is not in the proper environment to perform the MNPS function. See the *z/OS Communications Server: SNA Network Implementation Guide* for a description of the MNPS environment.

DISABLED
The application OPENed its ACB and specified PERSIST=YES, but has not yet issued SETLOGON OPTCD=PERSIST. Data for the application is stored in the coupling facility structure in case the application chooses to enable persistence. However, sessions are not restored in the event of a failure.

ENABLED
The application has issued SETLOGON OPTCD=PERSIST. Sessions will be restored in the event of a failure.

RECOVERY PENDING
A failure of the VTAM owning the application has been detected. Wait for the application to recover.

SNPS RECOVERY PENDING
The application has failed, or issued CLOSE, while it was enabled for persistence. The application is now waiting for recovery on its owning VTAM or some other VTAM. In the event of subsequent failure of the owning VTAM, the sessions will be maintained and thus can be restored.

SUSPECT
The data associated with this application may be invalid; in the event of failure, the application's sessions will not be recovered. This may be caused by the current rebuilding of MNPS structure that contains the application's data.

TAKEOVER IN PROGRESS
The application is moving from one VTAM to another VTAM. The owning VTAM is the CP where the application is expected to end up. If the owning CP were to fail, sessions in this state would be maintained and could be recovered.

TERMINATE
The application has CLOSEd, in a non-persistent manner, on its owning VTAM, but not all the sessions or RTP connections have been terminated yet.

UNKNOWN STATE

The application is MNPS capable, but there is currently no local application status block (ASB) available for this VTAM to use to determine the MNPS state of the application. This will most likely occur when the application is attempting to move from one VTAM to this VTAM, but the ownership of the application has not yet been transferred between the VTAMs.

Operators can display the current application state from other VTAMs in the sysplex that are connected to the MNPS structure.

System Action: Processing continues.

Operator Response: None.

Programmer Response: None.

IST1551I *sense_1 sense_2 sense_3 sense_4 sense_5*

Explanation: VTAM issues this message as part of a group of messages in response to a DISPLAY SNSFILTR command. See the explanation of IST1321I for a complete description of the group.

IST1552I **MAC =** *mac_level* **MACTYPE =** *mac_type.*

Explanation: This message is part of a group of messages that VTAM issues in response to a DISPLAY ID, DISPLAY MODEL, or DISPLAY LUGROUPS command. The first message in the group is IST228I. See the explanation of that message for a complete description.

IST1553I *atm_address address_type address_format*

Explanation: This message is part of a group of messages. See the explanation of message IST1559I for a complete description of the group.

IST1554I **PVCNAME =** *pvc_name*

Explanation: VTAM issues this message as part of a group of messages in response to a DISPLAY ID command for an ATM native permanent virtual channel (PVC).

pvc_name is the name of the PVC, as defined on the PVCNAME operand on the LINE definition statement in the external communication adapter (XCA) major node.

System Action: Processing continues.

Operator Response: None.

Programmer Response: None.

IST1555I **VPCI/VCI =** *vpci_vci*

Explanation: VTAM issues this message as part of a group of messages in response to a DISPLAY ID command for a remote PU connected through an ATM native switched virtual channel (SVC) or a permanent virtual channel (PVC).

The virtual path connection identifier (VPCI) is represented by the first two hexadecimal digits in *vpci_vci*.

The virtual channel identifier (VCI) is represented by the last four hexadecimal digits in *vpci_vci*.

System Action: Processing continues.

Operator Response: None.

Programmer Response: None.

IST1556I **ATM** *connection_type* **FAILURE: ID =** *node_name* **STATUS =** *status_code*

Explanation: This message is the first message in a group of messages that VTAM issues in response to a failed inactivation or activation request for an ATM native permanent virtual channel (PVC) or switched virtual channel (SVC) connection. VTAM issues the same group of messages when an existing native ATM PVC or SVC connection fails.

A complete description of the message group follows:

```
 IST1556I ATM connection_type FAILURE: ID = node_name  STATUS = status_code
[IST1562I CAUSE = cause_code]
[IST1558I DIAG = diagnostic_code]
[IST1558I DIAG = diagnostic_code]
[IST1562I CAUSE = cause_code]
[IST1558I DIAG = diagnostic_code]
[IST1558I DIAG = diagnostic_code]
 IST314I  END
```

IST1556I

connection_type can be one of the following:

CALL Indicates the failure of an activation or inactivation request for an ATM native PVC or SVC connection.

DISABLE
Indicates the failure of an inactivation request for an incoming call filter for an ATM native port on the IBM Open Systems Adapter.

ENABLE
Indicates the failure of an activation request for an incoming call filter for an ATM native port on the IBM Open Systems Adapter.

PORT Indicates the failure of an activation or inactivation request for an ATM native port on the IBM Open Systems Adapter.

If *connection_type* is DISABLE, ENABLE, or PORT, *node_name* is the name of an external communication adapter (XCA) major node that defines an ATM native port.

If *connection_type* is CALL, *node_name* is the name of the PU definition statement that represents the remote PU that is connected through an ATM native SVC.

status_code indicates the cause of a failure detected by the IBM Open Systems Adapter. See the *z/OS Communications Server: IP and SNA Codes* for an explanation of what the status code means.

IST1562I

cause_code indicates the cause of a failure detected by the ATM network. See the *z/OS Communications Server: IP and SNA Codes* for an explanation of what the cause code means.

Note: This message might be repeated if there are multiple cause codes associated with the failure.

IST1558I

diagnostic_code indicates additional information about the cause of a failure detected by the ATM network. See the *z/OS Communications Server: IP and SNA Codes* for an explanation of what the diagnostic code means.

Note: This message might be repeated to accommodate diagnostic codes that are longer than 24 bytes.

System Action: For call failures, the dial or activation of the PU fails. For enable and disable failures, no incoming calls can be accepted from the ATM native port. For port failures, all lines and PUs for the port will be deactivated.

Operator Response: If *status_code*, *cause_code*, or *diagnostic_code* indicates that the failure is a result of a temporary condition, reactivate the PU.

Programmer Response: If failure persists after reactivation attempts, examine *status_code*, *cause_code*, or *diagnostic_code* to determine if the failure is a result of a system definition error or a network error. If the failure is a result of a system definition error, correct the error. If the failure is a result of a network error, contact the ATM network provider.

IST1557I **MEDIUM =** *medium*, **PORT NAME =** *port_name*

Explanation: VTAM issues this message when a DISPLAY ID command is entered for an external communication adapter (XCA) major node that defines an ATM native connection.

medium is the type of shared access transport facility (SATF) represented by the XCA major node. ATM is the only valid value for an ATM native connection.

port_name is the name of the port on the IBM Open Systems Adapter through which the ATM native connection is made.

System Action: Processing continues.

Operator Response: None.

Programmer Response: None.

IST1558I DIAG = *diagnostic_code*

Explanation: This message is part of a group of messages. See the explanation of message IST1556I for a complete description of the group.

IST1559I ATM ADDRESS TYPE FORMAT

Explanation: VTAM issues this message as part of a group of messages in response to a DISPLAY ID command for:

- An external communication adapter (XCA) major node that defines an ATM native port.
- A remote node connected through an ATM native switched virtual channel (SVC).

A complete description of the message group follows:

```
IST1559I       ATM ADDRESS                TYPE               FORMAT
IST1553I       atm_address                address_type       address_format
```

IST1559I

Message IST1559I is a header line identifying information in subsequent occurrences of message IST1553I.

IST1553I

For an XCA major node, *address_type* can be LOCAL or GATEWAY.

– LOCAL *atm_address* is the address, in hexadecimal, of a local IBM Open Systems Adapter port defined by the XCA major node.

– GATEWAY *atm_address* is the public E164 address, in decimal, through which a local IBM Open Systems Adapter port can be reached.

For a remote node connected through an ATM native SVC, *address_type* can be LOCAL or REMOTE.

– LOCAL *atm_address* is the address, in decimal, of the local IBM Open Systems Adapter port through which the remote node is connected.

– REMOTE *atm_address* is the address, in decimal, of the remote node.

address_format can be one of the following:

E164 Indicates that the address is in a public ATM network and is in the native E164 address format.

NSAP Indicates that the address is in a private ATM network and is in the International Organization for Standardization (ISO) network service access point (NSAP) address format.

Note: An *NA* in all three fields of the message indicates that an address is not available, most likely because a line defined in the XCA major node has not been activated.

System Action: Processing continues.

Operator Response: None.

Programmer Response: None.

IST1560I VARY ACT *statement_name* **CHANGE FAILED**

Explanation: This message is the first in a group of messages that VTAM issues to indicate the failure of a dynamic change to a TRL major node. The failure resulted from a VARY ACT command.

A complete description of the message group follows:

```
IST1560I VARY ACT statement_name CHANGE FAILED
IST1561I PORTNAME ON TRLE NOT VALID
IST314I  END
```

IST1560I

statement_name is the major node name that was specified on the ID operand of the VARY ACT command.

IST1561I

PORTNAME ON TRLE NOT VALID

An attempt was made to add or modify a TRLE definition statement that specified an invalid name on the PORTNAME operand. A probable cause is that the name specified on the PORTNAME operand is not unique in this node or is already active.

System Action: The remaining definition statements are processed.

Operator Response: Enter a DISPLAY command for ISTTRL. Save the system log for problem determination.

Programmer Response: Use the output from the operator to correct the TRLE definition statement in error.

IST1561I PORTNAME ON TRLE NOT VALID

Explanation: This message is issued either as part of a group of messages or as a single message. If the message is issued as part of a group of messages, see the explanation of message IST1560I for a complete description of the group.

If message IST1560I does not preceed IST1561I, see the explanations of the messages that follow IST1561I for more information.

IST1562I CAUSE = *cause_code*

Explanation: This message is part of a group of messages. See the explanation of message IST1556I for a complete description of the group.

IST1563I CKEYNAME = *ckeyname* **CKEY =** *ckey_value* **CERTIFY =** *certify_value*

Explanation: This message is part of a group of messages that VTAM issues in response to a DISPLAY ID, DISPLAY MODEL, or DISPLAY LUGROUPS command. The first message in the group is IST228I. See the explanation of that message for a complete description.

IST1564I TSO NOT ACTIVE

Explanation: VTAM issues this message when DISPLAY TSOUSER command is entered for a given user id, but there is no TSO active.

System Action: Processing continues.

Operator Response: Start TSO and try the command again.

Programmer Response: None.

IST1565I *type* **MODULES =** *current***K**

Explanation: VTAM issues this message as part of a group of messages in response to a DISPLAY BFRUSE or a DISPLAY STORUSE command. For a DISPLAY BFRUSE command, the first message in the group is IST449I. For a DISPLAY STORUSE command, the first message in the group is IST1242I. See the explanation of those messages for a complete description.

IST1567I *alt_structure alt_structure alt_structure*

Explanation: This message is part of a group of messages VTAM issues in response to a DISPLAY STATS,TYPE=CFS command. The first message in the group is IST1370I. See the explanation of that message for a complete description.

System Action: Processing continues.

Operator Response: None.

Programmer Response: None.

IST1568I **INLP =** *inlp* **ONLP =** *onlp* **BFNLP =** *bfnlp*

Explanation: VTAM issues this message as part of a message group. The first message in the group is IST440I. See the explanation of that message for a complete description.

IST1569I **INLP =** *inlp* **ONLP =** *onlp*

Explanation: VTAM issues this message as part of a group of messages that displays tuning statistics for multipath channel (MPC) attached resources. The first message in the group is IST1230I. See that message for a complete description.

IST1570I **NBYTECTO =** *nbytecto* **NBYTECT =** *nbytect*

Explanation: VTAM issues this message as part of a group of messages that displays tuning statistics for multipath channel (MPC) attached resources. The first message in the group is IST1230I. See that message for a complete description.

IST1571I *module_name* **ENTRY POINT IS** *address* **LEVEL IS** *svc_level*

Explanation: This message is part of a group of messages VTAM issues in response to a DISPLAY VTAMSTOR,MODULE command. A complete description of the message group follows:

```
IST1571I module_name ENTRY POINT IS address LEVEL IS svc_level
IST1574I   offset hexdata_1 hexdata_2 hexdata_3 hexdata_4 EBCDIC_data
IST1574I   offset hexdata_1 hexdata_2 hexdata_3 hexdata_4 EBCDIC_data
IST314I END
```

IST1571I

module_name is the module name provided in the DISPLAY VTAMSTOR command.

address is the hexadecimal storage address of the module's entry point.

svc_level is the service level of the module. This will usually contain a PTF number or a Julian date; if this is not available, the field will contain **NA**. The Julian date will be of the format *yy.ddd*, where *yy* is the year and *ddd* is the day.

There are two special values that may appear in this field.

– **REPLACD** is stored in the service level when a module or table is replaced. For example, if a MODIFY EXIT command replaced ISTEXCAA, the service level would indicate REPLACD.

– **.LM NAME** is stored in the service level when a module is loaded and the module name cannot be found at the beginning of the module. LM NAME indicates that name of the module was retrieved from the load module name.

IST1574I

This message displays storage beginning at the *address* indicated in message IST1571I. This message is issued twice to display a total of 32 bytes beginning with *address*.

offset is the hexadecimal offset of the storage from the *address* in message IST1571I.

hexdata_1, *hexdata_2*, *hexdata_3*, and *hexdata_4* each display four bytes of the storage in hexadecimal format.

EBCDIC_data displays sixteen bytes of the storage in EBCDIC format.

For some modules, the entry point address does not point to the beginning of the modules. Processing for the DISPLAY VTAMSTOR,MODULE command will display up to 32 bytes prior to the entry point address. This will be displayed as a negative offset. Less than 32 bytes may be displayed if the beginning of the module is found.

System Action: Processing continues.

Operator Response: None.

Programmer Response: None

IST1572I MODULE *module_name* **CANNOT BE LOCATED**

Explanation: VTAM issues this message in response to a DISPLAY VTAMSTOR command when the value specified on the MODULE parameter (*module_name*) cannot be located in storage. For the value on the MODULE parameter to be found, it must be the name in the eyecatcher of the module.

This message does not indicate that the module or CSECT is not loaded in storage; it just indicates that the defined searching algorithms cannot locate it.

System Action: Processing continues.

Operator Response: Verify that the name is a valid VTAM module name.

Programmer Response: None

IST1573I *type* **STORAGE DISPLAY BEGINS AT LOCATION** *address*

Explanation: VTAM issues this message as the first of a group of messages in response to a DISPLAY VTAMSTOR,RESOURCE or DISPLAY VTAMSTOR,NETADDR command or as part of the IST1863I message group. See the description of that message when IST1573I is not the first message in the group.

A complete description of the IST1573I message group follows:

```
IST1573I type STORAGE DISPLAY BEGINS AT LOCATION address
IST1574I   offset hexdata_1 hexdata_2 hexdata_3 hexdata_4 EBCDIC_data
IST1574I   offset hexdata_1 hexdata_2 hexdata_3 hexdata_4 EBCDIC_data
IST1574I   offset hexdata_1 hexdata_2 hexdata_3 hexdata_4 EBCDIC_data
:
IST314I END
```

IST1573I

type indicates the type of storage being displayed. The values for *type* are RDTE or RDTE PROFILE.

address indicates the hexadecimal storage address for the beginning of the display.

IST1574I

This message displays storage beginning at the *address* indicated in message IST1573I. This message is issued as many times as necessary to display the entire RDTE or RDTE profile.

offset is the hexadecimal offset of the storage from the *address* in message IST1571I.

hexdata_1, *hexdata_2*, *hexdata_3*, and *hexdata_4* each display four bytes of the storage in hexadecimal format.

EBCDIC_data displays sixteen bytes of the storage in EBCDIC format.

System Action: Processing continues.

Operator Response: None.

Programmer Response: None

IST1574I *offset hexdata_1 hexdata_2 hexdata_3 hexdata_4 EBCDIC_data*

Explanation: VTAM issues this message as part of a group of messages. The first message in the group is IST467I, IST1571I, IST1573I, IST1650I, IST1658I, or IST1863I. See the explanation of those messages for a complete description.

IST1575I DIALNO FOR PID: *pid(instance)*

Explanation: VTAM issues this message as part of a message group. The first message in the group is either IST149I or IST1351I. See the explanation of those messages for a complete description of the message group.

IST1576I DYNAMIC SWITCHED MAJOR NODE *nodename* **CREATED**

Explanation: VTAM issues this message to indicate that a new dynamic switched major node, *nodename*, has been created as part of processing to create a dynamic PU or LU.

System Action: Major node *nodename* is created.

Operator Response: None. DISPLAY commands can now be issued for *nodename*.

Programmer Response: None.

IST1577I **HEADER SIZE =** *hpsize* **DATA SIZE =** *dsize* **STORAGE =** *storage*

Explanation: VTAM issues this message as part of a message subgroup. See the explanation for IST1221I for a complete description.

IST1578I *inoptype* **INOP DETECTED FOR** *trlename* **BY** *modname* **CODE=***code*

Explanation: A module detected an inoperative condition for a resource. This message follows either message IST1222I or message IST1501I.

inoptype is the type of inoperative condition and can be one of the following:

DEVICE
A device in a multipath channel (MPC) group is inoperative.

HARD The entire MPC group is inoperative, and is not expected to recover without intervention.

SOFT The entire MPC group is inoperative; however, recovery of the connection is possible.

trlename is the name of the TRLE definition statement in the TRL major node that defines the MPC connection.

modname is the name of the module that detected the inoperative condition.

code identifies the point within *modname* where the inoperative condition was detected. *code* also categorizes the inoperative condition into the following:

Code **Category**

1–99 VTAM internal error

The inoperative condition was issued because of a VTAM internal logic error. If the VTAM start option INOPDUMP=ON when the inoperative condition is detected, a diagnostic dump is produced. This dump provides useful information for determining the cause of the error condition.

Note: Some operator actions, for example vary offline, produce conditions that are indistinguishable from error conditions. These are treated as failure conditions that cause this message to be issued and produce inopdumps, if the start option INOPDUMP=ON is specified.

100–199
Probable hardware error

The inoperative condition was generated due to unexpected channel status presented to VTAM from the hardware. INOPDUMP has no effect for this error.

200–255
Should not occur condition

This condition could not be categorized into either a software or hardware error. If the VTAM start option INOPDUMP=ON when the inoperative condition is detected, a diagnostic dump is produced. This dump provides useful information for determining the cause of the error condition.

Table 1 shows exceptions for which no dumps are taken:

Table 1. Exceptions for which no dumps are taken

Module name	Code	Reason
ISTTSC8E	203	This inoperative condition can validly occur if contact with the adjacent host is unexpectedly lost; for example, during IPL.
ISTTSC8E	204	This inoperative condition can validly occur. MPC dynamics are used to recover the device.

Table 1. Exceptions for which no dumps are taken (continued)

Module name	Code	Reason
ISTTSCMY	200	The last active read or write subchannel within an MPC group was varied offline.
	201	Deactivation due to an activation failure.
ISTZRM01	1	A previous abend caused this inoperative condition. A dump should be available to diagnose the cause of the abend.
ISTTSCM8	1	Previous inoperative condition exists.
	2	Previous inoperative condition exists.
ISTLLCM8	1	MPC data path failure
	100	OSA initiated failure
	101	Channel path failure
	200	Device was varied offline
	201	Signalling plane failure
	202	Channel control failure
ISTTSCBX	1	This inoperative condition can validly occur if contact with the adjacent node is terminated.
	2	This inoperative condition can validly occur if contact with the adjacent node is terminated.
ISTTSCXT	100	This inoperative condition can validly occur if contact with the adjacent node is terminated.

If *modname* is ISTTSC8W and *code* is 200, this indicates a failure when VTAM is trying to send data to another node within a sysplex via the Cross-system Coupling Facility (XCF). If this message is preceded by MVS message IXC409D, an XCF signalling path between the two nodes has been lost. The resource, *trlename*, is the name of the dynamic XCF TRLE used by VTAM for connectivity between the two nodes. A display of the corresponding dynamic XCF PU will show the CP name of the other node. The VTAM in this other node may not be aware of the inoperative condition. The loss of the XCF signalling path may be transient or permanent. When the signalling path is restored, the VTAM in the other node will be informed of the inoperative condition of this connection, and the corresponding PU in that node will go inoperative. Connectivity can be restored at that time by reactivating one of the PUs.

System Action: If *inoptype* is DEVICE, the channel listed in the preceding message is deactivated. The device might be dynamically added back to the active group without disruption using APPN host-to-host channel dynamics.

If *inoptype* is HARD, resource *trlename* is deactivated and all service access points (SAPs) for *trlename* are notified of the condition.

If *inoptype* is SOFT, resource *trlename* is deactivated and all service access points (SAP) for *trlename* are notified of the condition. VTAM attempts to reactivate *trlename*.

Operator Response: If *inoptype* is DEVICE, no further action is required.

If *inoptype* is HARD, reactivate resource *trlename*. If the activation fails, and the MPC group is critical to your network, save the system log for problem determination.

If *inoptype* is SOFT, and this is the first occurrence of the message, no further action is required. If *inoptype* is SOFT, and this is not the first occurrence of the message, attempt to reactivate *trlename*. If the activation fails, and the MPC group is critical to your network, save the system log for problem determination.

Programmer Response: For *code* values in the “VTAM internal error” or “should not occur condition” categories, take the following actions:

- If you have access to IBMLink, search for known problems in this area.
- If no applicable matches are found, or if you do not have access to IBMLink, save the diagnostic dump produced for this error and report the problem to IBM. If you have access to IBMLink, the problem can be reported to IBM using the Electronic Technical Report (ETR) option on IBMLink.

For *code* values in the “probable hardware error” category, contact the appropriate hardware support organization to analyze this error.

IST1579I ----------

Explanation: VTAM issues this message as part of a group of messages in response to a DISPLAY TOPO command. See message IST1295I for a complete description of possible message groups.

IST1580I XID RECEIVED BY VTAM:

Explanation: VTAM issues this message as part of a group of messages. The first message in the group is IST467I or IST1658I. See the explanation of those messages for a complete description.

IST1582I CONTROL VECTOR X'22' ANALYSIS

Explanation: VTAM issues this message as part of a group of messages. The first message in the group is IST467I or IST1658I. See the explanation of those messages for a complete description.

IST1583I BYTE OFFSET OF FIRST BYTE IN ERROR = *byteoffset*

Explanation: VTAM issues this message as part of a group of messages. The first message in the group is IST467I or IST1658I. See the explanation of those messages for a complete description.

IST1584I BIT OFFSET OF FIRST BIT IN ERROR = *bitoffset*

Explanation: VTAM issues this message as part of a group of messages. The first message in the group is IST467I or IST1658I. See the explanation of those messages for a complete description.

IST1585I SENSE CODE = *sense*

Explanation: VTAM issues this message as part of a group of messages. The first message in the group is IST467I. See the explanation of that message for a complete description.

IST1586I XID SENT BY VTAM:

Explanation: VTAM issues this message as part of a group of messages. The first message in the group is IST467I or IST1658I. See the explanation of those messages for a complete description.

IST1587I ORIGIN NCE X’*nceid*’

Explanation: VTAM issues this message as part of a group of messages in response to a DISPLAY ID command for a type 2.1 node representing a rapid transport protocol (RTP) route.

The first message in the group is IST1476I. See the description of that message for more information.

IST1588I RTP END TO END ROUTE - COMPUTED SESSION PATH

Explanation: VTAM issues this message as part of a group of messages in response to a DISPLAY ID command for a type 2.1 node representing a rapid transport protocol (RTP) route.

The first message in the group is IST1476I. See the description of that message for more information.

System Action: None.

Operator Response: None.

Programmer Response: None.

IST1589I XNETALS = *xnetalsvalue*

Explanation: VTAM issues this message in response to a DISPLAY ID command for a type 2.1 PU.

xnetalsvalue is the value of the XNETALS operand defined for the PU specified on the DISPLAY ID command. *xnetalsvalue* can be one of the following:
YES Nonnative NETIDs are allowed.
NO The native NETID is to used.

System Action: Processing continues

Operator Response: None

Programmer Response: None

IST1590I PU NETID DIFFERENT THAN HOST AND CONTACTED REQUEST

Explanation: This message is issued in a message group with message IST605I. A complete description of the message group follows:

```
IST605I  ERROR FOR ID = nodename – text1 : text2
IST1590I  PU NETID DIFFERENT THAN HOST AND CONTACTED REQUEST
IST314I  END
```

IST605I

A request from *nodename* failed.

text1 : *text2* specifies the RU in error, and is **REQUEST : CONTACTED** for this message group.

IST1590I

One of the following has occurred:

- The PU is being reactivated. The NETID was not specified on the PU definition statement, and the NETID received in the CONTACTED request is not the same as the NETID received on a previous activation of this PU.
- NETID=(,NOXNETLS) was coded on the PU definition statement and the CONTACTED RU contained a NETID that does not match this VTAM's NETID.

System Action: *nodename* is deactivated.

Operator Response: Save the system log for problem determination.

Programmer Response:

- Verify that the network ID passed in the contacted RU matches the network ID specified in the PU definition statement.
- If the problem persists, try to re-create the problem while an I/O trace or buffer trace is running for the affected *nodename*. If *nodename* is link-attached, run a line trace for the affected line.

  Enter a MODIFY TRACE,ID=*ncpname* command, where *ncpname* is the name of the NCP major node that contains the peripheral PU or link station *nodename* (as opposed to the NCP major node adjacent to the link station *nodename*).

IST1591I NCP NOT LOADED

Explanation: This message is issued in a message group with message IST605I. A complete description of the message group follows:

```
IST605I  ERROR FOR ID = nodename – text1 : text2
IST1591I  NCP NOT LOADED
IST314I  END
```

IST605I

A request from *nodename* failed.

text1 : *text2* specifies the RU in error, and is **REQUEST : CONTACTED** for this message group.

IST1591I

The CONTACTED request from the NCP indicates that LOAD is required.

System Action: *nodename* is deactivated.

Operator Response: Save the system log for problem determination.

Programmer Response:

- If the node should be activated, reactivate it, specifying LOAD=YES on the command.
- If the problem persists, try to re-create the problem while an I/O trace or buffer trace is running for the affected *nodename*. If *nodename* is link-attached, run a line trace for the affected line.

  Enter a MODIFY TRACE,ID=*ncpname* command, where *ncpname* is the name of the NCP major node that contains the peripheral PU or link station *nodename* (as opposed to the node adjacent to the link station *nodename*).

IST1592I NETID IN XID DID NOT MATCH NETID OF PU

Explanation: This message is issued in a message group with message IST605I. A complete description of the message group follows:

```
IST605I  ERROR FOR ID = nodename — text1 : text2
IST1592I  NETID IN XID DID NOT MATCH NETID OF PU
IST314I  END
```

IST605I

A request from *nodename* failed.

text1 : *text2* specifies the RU in error, and is **REQUEST : CONTACTED** for this message group.

IST1592I

The NETID received in the XID is not the same as the NETID defined on the PU definition statement, or a nonnative NETID is not allowed for this PU.

System Action: *nodename* is deactivated.

Operator Response: Save the system log for problem determination.

Programmer Response:

- Verify that the network ID passed in the contacted RU matches the network ID specified in the PU definition statement.
- If this connection is to be allowed, then correct the NETID defined on the PU or correct the NETID configured in the device being contacted.

IST1593I RESOURCE TYPE NOT VALID

Explanation: This message is issued in a message group with message IST605I. A complete description of the message group follows:

```
IST605I  ERROR FOR ID = nodename — text1 : text2
IST1593I  RESOURCE TYPE NOT VALID
IST314I  END
```

IST605I

A request from *nodename* failed.

text1 : *text2* specifies the RU in error, and is **REQUEST : CONTACTED** for this message group.

IST1593I

The nodename received in the CONTACTED request is already defined to VTAM and is not an adjacent CP, PU, or link station or RNAME.

System Action: *nodename* is deactivated.

Operator Response: Save the system log for problem determination.

Programmer Response:

- If the node should be activated, then the duplicate name condition must be resolved. Correct the VTAM definition that defines *nodename*, or determine the reason that the connecting node is sending in the conflicting information.
- If the problem persists, try to re-create the problem while an I/O trace or buffer trace is running for the affected *nodename*. If *nodename* is link-attached, run a line trace for the affected line.

  Enter a MODIFY TRACE,ID=*ncpname* command, where *ncpname* is the name of the NCP major node that contains the peripheral PU or link station *nodename* (as opposed to the NCP major node adjacent to the link station *nodename*).

IST1594I CPNAME IN CONTACTED REQUEST SAME AS SSCPNAME

Explanation: This message is issued in a message group with message IST605I. A complete description of the message group follows:

```
IST605I  ERROR FOR ID = nodename — text1 : text2
IST1594I  CPNAME IN CONTACTED REQUEST SAME AS SSCPNAME
IST314I  END
```

IST605I

A request from *nodename* failed.

text1 : *text2* specifies the RU in error, and is **REQUEST : CONTACTED** for this message group.

IST1594I

The CPNAME received in control vector (CV) X'0E' appended to the XID is the same as this host's SSCPNAME start parameter.

System Action: *nodename* is deactivated.

Operator Response: Save the system log for problem determination.

Programmer Response:

- If the node should be activated, then the CPNAME must be corrected before the reactivation can succeed. The cpname is most likely configured or defined in the node *nodename* that is being contacted.
- If the problem persists, try to re-create the problem while an I/O trace or buffer trace is running for the affected *nodename*. If *nodename* is link-attached, run a line trace for the affected line.

  Enter a MODIFY TRACE,ID=*ncpname* command, where *ncpname* is the name of the NCP major node that contains the peripheral PU or link station *nodename* (as opposed to the NCP major node adjacent to the link station *nodename*).

IST1595I LINK STATION NOT ASSOCIATED WITH AN NCP

Explanation: This message is issued in a message group with message IST605I. A complete description of the message group follows:

```
IST605I  ERROR FOR ID = nodename — text1 : text2
IST1595I  LINK STATION NOT ASSOCIATED WITH AN NCP
IST314I  END
```

IST605I

A request from *nodename* failed.

text1 : *text2* specifies the RU in error, and is **REQUEST : CONTACTED** for this message group.

IST1596I

IST1595I

A **CONTACTED** request was received for a link station indicating that an adjacent communication controller was not loaded. There are three possible situations:

1. The link station *nodename* was being activated as a result of a VARY ACT command directed at the link station itself (direct or indirect activation of the link station). VTAM expected to find the adjacent communication controller already loaded with an NCP, but it was not. The link station activation fails because VTAM does not perform load operations when only a link station is activated.
2. The link-station *nodename* was being activated as a result of error recovery to an NCP adjacent to *nodename* (automatic activation of the link station).
3. The link station *nodename* was being activated as a result of a VARY ACT command to an NCP adjacent to *nodename*. The NCP is not loaded because LOAD=NO was specified on the VARY ACT command.

System Action: *nodename* is deactivated, and the adjacent NCP remains pending awaiting the successful activation of one or more other adjacent link stations.

Operator Response: After first ensuring that the NCP is inactive, the communication controller adjacent to link station *nodename* needs to be loaded by activating an NCP for this communication controller.

The link station *nodename* can be reactivated:

- Automatically, as part of the NCP activation
- Directly or indirectly (for example, by using a VARY ACT command after the NCP is successfully activated).

If the NCP repeatedly abends after being loaded, dump the failing NCP for further trouble-shooting.

Programmer Response: No further recommended response.

IST1596I SWITCHED LINK STATION STATE PCTD2 NOT VALID FOR LOAD

Explanation: This message is issued in a message group with message IST605I. A complete description of the message group follows:

```
IST605I  ERROR FOR ID = nodename — text1 : text2
IST1596I  SWITCHED LINK STATION STATE PCTD2 NOT VALID FOR LOAD
IST314I  END
```

IST605I

A request from *nodename* failed.

text1 : *text2* specifies the RU in error, and is **REQUEST : CONTACTED** for this message group.

IST1596I

The activation cannot proceed due to the current NCP state of PCTD2.

System Action: *nodename* is deactivated, and the adjacent NCP remains pending awaiting the successful activation of one or more other adjacent link stations.

Operator Response: After ensuring that the NCP is inactive, the communication controller adjacent to link station *nodename* needs to be loaded by activating an NCP for this communication controller.

The link station *nodename* can be reactivated:

- Automatically, as part of the NCP activation
- Directly or indirectly (for example, by using a VARY ACT command after the NCP is successfully activated).

If the NCP repeatedly abends after being loaded, dump the failing NCP for further trouble-shooting.

Programmer Response: No further recommended response.

IST1597I SWITCHED CALL=IN NCP NOT VALID

Explanation: This message is issued in a message group with message IST605I. A complete description of the message group follows:

```
IST605I  ERROR FOR ID = nodename – text1 : text2
IST1597I  SWITCHED CALL=IN NCP NOT VALID
IST314I  END
```

IST605I

A request from *nodename* failed.

text1 : *text2* specifies the RU in error, and is **REQUEST : CONTACTED** for this message group.

IST1597I

A switched connection to an NCP must be defined with a CALL=OUT PATH definition.

System Action: *nodename* is deactivated, and the adjacent NCP remains pending awaiting the successful activation of one or more other adjacent link stations.

Operator Response: After ensuring that the NCP is inactive, the communication controller adjacent to link station *nodename* needs to be loaded by activating an NCP for this communication controller.

The link station *nodename* can be reactivated:

- Automatically, as part of the NCP activation
- Directly or indirectly (for example, by using a VARY ACT command after the NCP is successfully activated).

If the NCP repeatedly abends after being loaded, dump the failing NCP for further trouble-shooting.

Programmer Response: No further recommended response.

IST1598I LEASED LINK STATION STATE PCTD2 NOT VALID FOR LOAD

Explanation: This message is issued in a message group with message IST605I. A complete description of the message group follows:

```
IST605I  ERROR FOR ID = nodename – text1 : text2
IST1598I  LEASED LINK STATION STATE PCTD2 NOT VALID FOR LOAD
IST314I  END
```

IST605I

A request from *nodename* failed.

text1 : *text2* specifies the RU in error, and is **REQUEST : CONTACTED** for this message group.

IST1598I

The NCP was in a PCTD2 state when the NCP indicated that a LOAD was required. NCP must be in a CONTACTED state to perform a load.

System Action: *nodename* is deactivated, and the adjacent NCP remains pending awaiting the successful activation of one or more other adjacent link stations.

Operator Response: After ensuring that the NCP is inactive, the communication controller adjacent to link station *nodename* needs to be loaded by activating an NCP for this communication controller.

The link station *nodename* can be reactivated:

- Automatically, as part of the NCP activation
- Directly or indirectly (for example, by using a VARY ACT command after the NCP is successfully activated).

If the NCP repeatedly abends after being loaded, dump the failing NCP for further trouble-shooting.

IST1599I

Programmer Response: No further recommended response.

IST1599I NCP INDICATES LOAD REQUIRED BUT LOAD=NO

Explanation: This message is issued in a message group with message IST605I. A complete description of the message group follows:

```
IST605I  ERROR FOR ID = nodename – text1 : text2
IST1599I  NCP INDICATES LOAD REQUIRED BUT LOAD=NO
IST314I  END
```

IST605I

A request from *nodename* failed.

text1 : *text2* specifies the RU in error, and is **REQUEST : CONTACTED** for this message group.

IST1599I

The CONTACTED request received from the NCP indicates that the NCP needs to be loaded, but the VARY ACT command was issued with the LOAD parameter defaulted to or specified LOAD=NO.

System Action: *nodename* is deactivated, and the adjacent NCP remains pending awaiting the successful activation of one or more other adjacent link stations.

Operator Response: After first ensuring that the NCP is inactive, the communication controller adjacent to link station *nodename* needs to be loaded by activating an NCP for this communication controller.

The link station *nodename* can be reactivated:

- Automatically, as part of the NCP activation
- Directly or indirectly (for example, by using a VARY ACT command after the NCP is successfully activated).

If the NCP repeatedly abends after being loaded, dump the failing NCP for further trouble-shooting.

Programmer Response: No further recommended response.

Chapter 9. IST messages for VTAM network operators IST1600I – IST1864I

This chapter lists the VTAM messages beginning with IST in the range of IST1600I through IST1864I. These messages can appear on a network operator's console.

See Appendix E, "Message text for VTAM operator messages" on page 769 for a list of the text of all VTAM operator messages.

Note: Messages that begin with the prefix **ISTF** are issued by the VTAM dump analysis tool and the VTAM internal trace (VIT) analysis tool. Help information is available as a part of each tool by pressing F1. Therefore, **ISTF** messages are not documented in *z/OS Communications Server: SNA Messages*. See *z/OS Communications Server: SNA Diagnosis Vol 1, Techniques and Procedures* for additional information.

IST1600I LOAD MODULE MISMATCH – LOAD=NO

Explanation: This message is issued in a message group with message IST605I. A complete description of the message group follows:

```
IST605I  ERROR FOR ID = nodename – text1 : text2
IST1600I  LOAD MODULE MISMATCH – LOAD=NO
IST314I  END
```

IST605I

A response sent by *nodename* contained invalid data.

text1 : *text2* specifies the RU in error, and is **RESPONSE : ACTPU** for this message group.

IST1600I

The NCP load module name received in an ACTPU response does not match the NCP load module name in the VTAM definition. LOAD=NO was defaulted to or specified on the VARY ACT command.

System Action: *nodename* is deactivated.

Operator Response: Save the system log for problem determination.

Programmer Response:

- If the node should be activated, reactivate it.
- If the problem persists, try to re-create the problem while an I/O trace or buffer trace is running for the affected *nodename*. If *nodename* is link-attached, run a line trace for the affected line.

IST1601I APPN SEARCHES TO *cp_name* ARE *status*

Explanation: VTAM issues this message when the sending of APPN search requests to an adjacent control point (CP) has been suspended or resumed.

cp_name is the name of the adjacent CP.

status can be either SUSPENDED or RESUMED.

When *status* is SUSPENDED, severe network congestion has occurred.

VTAM suspends sending of APPN search requests to an adjacent CP when the maximum congestion threshhold reaches the value specified by the MAXLOCAT start option.

VTAM resumes sending APPN search requests to an adjacent CP when a minimum congestion threshhold is reached.

For information on the minimum and maximum congestion threshholds, see the description of the MAXLOCAT start

© Copyright IBM Corp. 1984, 2002

option in the *z/OS Communications Server: SNA Resource Definition Reference*.

System Action: When the maximum congestion threshhold is reached, VTAM stops sending new APPN search requests to the adjacent CP.

When the minimum congestion threshhold is reached, VTAM resumes sending APPN search requests to the adjacent CP.

Operator Response: If *status* is RESUMED, no action is required.

If *status* is SUSPENDED, issue a DISPLAY STORUSE command to ensure that VTAM has enough private storage with which to operate. If storage is critical, issue a VARY INACT,ID=*cp_name*,TYPE=FORCE command to terminate CP-CP sessions with the adjacent CP.

Termination of CP-CP sessions with the adjacent CP clears the outbound data queue, and frees storage. However, the adjacent CP might be able to recover and allow VTAM to resume sending APPN search requests.

Notify the system programmer of the *cp_name*. New LU-LU sessions fail if APPN search requests are required to pass through *cp_name*.

Programmer Response: Determine the severity of the problem based on the network configuration and the status of VTAM private storage. Termination of CP-CP sessions with the adjacent CP clears the outbound data queue, and frees storage. However, the adjacent CP might be able to recover and allow VTAM to resume sending APPN search requests.

Determine that the maximum threshhold value is appropriate for the network. If the value needs to be adjusted, change the value of the MAXLOCAT start option.

IST1602I RU ERROR: EXTRA CV X'*xx*'

Explanation: This message is issued in a message group with message IST605I. A complete description of the message group follows:

```
IST605I  ERROR FOR ID = nodename – text1 : text2
IST1602I  RU ERROR: EXTRA CV X'xx'
IST314I  END
```

IST605I

A response sent by *nodename* contained invalid data.

text1 : *text2* specifies the RU in error, and is **RESPONSE : ACTPU** for this message group.

IST1602I

Multiple Control Vectors X'09', X'0B', X'11', or X'FE' were returned with the ACTPU response from the NCP.

System Action: *nodename* is deactivated.

Operator Response: Save the system log for problem determination.

Run your operating system service aid program to determine if MDR/OBR information has been recorded. See the *EREP User's Guide and Reference* for more information on using EREP. If you use a network management application such as NetView, check to see if an alert was recorded for this problem.

A buffer trace can provide additional information regarding the cause of the error.

Programmer Response: If you cannot determine the cause of the problem from the output provided or need additional assistance, contact the IBM support center. If available, provide the MDR/OBR information from your operating system service aid program or the alert information recorded by your network management application.

IST1603I RU ERROR: INVALID POSITIVE RESPONSE

Explanation: This message is issued in a message group with message IST605I. A complete description of the message group follows:

```
IST605I  ERROR FOR ID = nodename – text1 : text2
IST1603I  RU ERROR: INVALID POSITIVE RESPONSE
IST314I  END
```

IST605I

A response sent by *nodename* contained invalid data.

text1 : *text2* specifies the RU in error, and is **RESPONSE : ACTPU** for this message group.

IST1603I One of the following has occurred:

Reserved bits are nonzero.

The ACTPU response length is incorrect.

The ACTPU response is not format 1 or format 2.

The ACTPU response type is not ERP or COLD.

System Action: *nodename* is deactivated.

Operator Response: Save the system log for problem determination.

Run your operating system service aid program to determine if MDR/OBR information has been recorded. See the *EREP User's Guide and Reference* for more information on using EREP. If you use a network management application such as NetView, check to see if an alert was recorded for this problem.

A buffer trace can provide additional information regarding the cause of the error.

Programmer Response: If you cannot determine the cause of the problem from the output provided or need additional assistance, contact the IBM support center. If available, provide the MDR/OBR information from your operating system service aid program or the alert information recorded by your network management application.

IST1604I RU ERROR: LENGTH, FORMAT, OR TYPE NOT VALID

Explanation: This message is issued in a message group with message IST605I. A complete description of the message group follows:

```
IST605I  ERROR FOR ID = nodename – text1 : text2
IST1604I  RU ERROR: LENGTH, FORMAT, OR TYPE NOT VALID
IST314I  END
```

IST605I

A response sent by *nodename* contained invalid data.

text1 : *text2* specifies the RU in error, and is **RESPONSE : ACTPU** for this message group.

IST1604I

One of the following has occurred:

Reserved bits are nonzero.

The ACTPU response length is incorrect.

The ACTPU response is not format 0 or format 3.

The ACTPU response type is not ERP or COLD.

System Action: *nodename* is deactivated.

Operator Response: Save the system log for problem determination.

Run your operating system service aid program to determine if MDR/OBR information has been recorded. See the *EREP User's Guide and Reference* for more information on using EREP. If you use a network management application such as NetView, check to see if an alert was recorded for this problem.

A buffer trace can provide additional information regarding the cause of the error.

Programmer Response: If you cannot determine the cause of the problem from the output provided or need

additional assistance, contact the IBM support center. If available, provide the MDR/OBR information from your operating system service aid program or the alert information recorded by your network management application.

IST1605I RU ERROR: MISSING CV X'0B'

Explanation: This message is issued in a message group with message IST605I. A complete description of the message group follows:

```
IST605I  ERROR FOR ID = nodename – text1 : text2
IST1605I  RU ERROR: MISSING CV X'0B'
IST314I  END
```

IST605I

A response sent by *nodename* contained invalid data.

text1 : *text2* specifies the RU in error, and is **RESPONSE : ACTPU** for this message group.

IST1605I

A format 3 ACTPU response was received, but did not include an SSCP-PU capabilities vector, CV X'0B', which is required.

System Action: *nodename* is deactivated.

Operator Response: Save the system log for problem determination.

Run your operating system service aid program to determine if MDR/OBR information has been recorded. See the *EREP User's Guide and Reference* for more information on using EREP. If you use a network management application such as NetView, check to see if an alert was recorded for this problem.

A buffer trace can provide additional information regarding the cause of the error.

Programmer Response: If you cannot determine the cause of the problem from the output provided or need additional assistance, contact the IBM support center. If available, provide the MDR/OBR information from your operating system service aid program or the alert information recorded by your network management application.

IST1606I DIAL RETRY FAILED

Explanation: This message is issued in a message group with message IST605I. A complete description of the message group follows:

```
IST605I  ERROR FOR ID = nodename – text1 : text2
IST1606I  DIAL RETRY FAILED
IST314I  END
```

IST605I

A response sent by *nodename* contained invalid data.

text1 : *text2* specifies the RU in error, and is **RESPONSE : ACTPU** for this message group.

IST1606I

Consecutive dial attempts have failed for this *nodename*. This may be due to line problems.

System Action: VTAM rejects the command. Other processing continues.

Operator Response: Retry the command. If the condition persists, save the system log for problem determination.

Programmer Response:

- If the node should be activated, reactivate it.
- If the problem persists, try to re-create the problem while an I/O trace or buffer trace is running for the affected nodename. If nodename is link-attached, run a line trace for the affected line.

IST1607I RU ERROR: RESPONSE TOO LONG

Explanation: This message is issued in a message group with message IST605I. A complete description of the message group follows:

```
IST605I  ERROR FOR ID = nodename – text1 : text2
IST1607I  RU ERROR: RESPONSE TOO LONG
IST314I  END
```

IST605I

A response sent by *nodename* contained invalid data.

text1 : *text2* specifies the RU in error, and is **RESPONSE : ACTPU** for this message group.

IST1607I

The ACTPU response received from the NCP is too long.

System Action: *nodename* is deactivated.

Operator Response: Save the system log for problem determination.

Run your operating system service aid program to determine if MDR/OBR information has been recorded. See the *EREP User's Guide and Reference* for more information on using EREP. If you use a network management application such as NetView, check to see if an alert was recorded for this problem.

A buffer trace can provide additional information regarding the cause of the error.

Programmer Response: If you cannot determine the cause of the problem from the output provided or need additional assistance, contact the IBM support center. If available, provide the MDR/OBR information from your operating system service aid program or the alert information recorded by your network management application.

IST1608I RU ERROR: RESPONSE TOO SHORT

Explanation: This message is issued in a message group with message IST605I. A complete description of the message group follows:

```
IST605I  ERROR FOR ID = nodename – text1 : text2
IST1608I  RU ERROR: RESPONSE TOO SHORT
IST314I  END
```

IST605I

A response sent by *nodename* contained invalid data.

text1 : *text2* specifies the RU in error, and is **RESPONSE : ACTPU** for this message group.

IST1608I

The ACTPU response received from the NCP is too short. This includes the length of the ACTPU response and its vectors.

System Action: *nodename* is deactivated.

Operator Response: Save the system log for problem determination.

Run your operating system service aid program to determine if MDR/OBR information has been recorded. See the *EREP User's Guide and Reference* for more information on using EREP. If you use a network management application such as NetView, check to see if an alert was recorded for this problem.

A buffer trace can provide additional information regarding the cause of the error.

Programmer Response: If you cannot determine the cause of the problem from the output provided or need additional assistance, contact the IBM support center. If available, provide the MDR/OBR information from your operating system service aid program or the alert information recorded by your network management application.

IST1609I CV X'0B' INDICATES ADJACENT LINK STATION NOT SUPPORTED

Explanation: This message is issued in a message group with message IST605I. A complete description of the message group follows:

```
IST605I  ERROR FOR ID = nodename – text1 : text2
IST1609I  CV X'0B' INDICATES ADJACENT LINK STATION NOT SUPPORTED
IST314I  END
```

IST605I

A response sent by *nodename* contained invalid data.

text1 : *text2* specifies the RU in error, and is **RESPONSE : ACTPU** for this message group.

IST1609I

A required indicator for Adjacent Link Station Address support is not present within the control vector (CV) X'0B'.

System Action: *nodename* is deactivated.

Operator Response: Save the system log for problem determination.

Run your operating system service aid program to determine if MDR/OBR information has been recorded. See the *EREP User's Guide and Reference* for more information on using EREP. If you use a network management application such as NetView, check to see if an alert was recorded for this problem.

A buffer trace can provide additional information regarding the cause of the error.

Programmer Response: If you cannot determine the cause of the problem from the output provided or need additional assistance, contact the IBM support center. If available, provide the MDR/OBR information from your operating system service aid program or the alert information recorded by your network management application.

IST1610I CORRELATOR MISMATCH – LOAD=NO

Explanation: This message is issued in a message group with message IST605I. A complete description of the message group follows:

```
IST605I  ERROR FOR ID = nodename – text1 : text2
IST1610I  CORRELATOR MISMATCH – LOAD=NO
IST314I  END
```

IST605I

A response sent by *nodename* contained invalid data.

text1 : *text2* specifies the RU in error, and is **RESPONSE : ACTPU** for this message group.

IST1610I

The VARY ACT command defaulted to or specified LOAD=NO, and the generated correlator did not match the correlator loaded in the communications controller.

System Action: *nodename* is deactivated.

Operator Response: Save the system log for problem determination.

Programmer Response:

- If the node should be activated, reactivate it.
- If the problem persists, try to re-create the problem while an I/O trace or buffer trace is running for the affected *nodename*. If *nodename* is link-attached, run a line trace for the affected line.

  Enter a MODIFY TRACE,ID=*nodename* command.

IST1611I CORRELATOR MISMATCH – NCP ACQUIRED BEFORE ACTIVATION

Explanation: This message is issued in a message group with message IST605I. A complete description of the message group follows:

```
IST605I  ERROR FOR ID = nodename – text1 : text2
IST1611I  CORRELATOR MISMATCH – NCP ACQUIRED BEFORE ACTIVATION
IST314I  END
```

IST605I

A response sent by *nodename* contained invalid data.

text1 : *text2* specifies the RU in error, and is **RESPONSE : ACTPU** for this message group.

IST1611I

The VARY ACT command defaulted to or specified LOAD=NO, and the generated correlator did not match the correlator loaded in the communications controller.

System Action: *nodename* is deactivated.

Operator Response: Save the system log for problem determination.

Programmer Response:

- If the node should be activated, reactivate it.
- If the problem persists, try to re-create the problem while an I/O trace or buffer trace is running for the affected *nodename*. If *nodename* is link-attached, run a line trace for the affected line.

  Enter a MODIFY TRACE,ID=*nodename* command.

IST1612I LOAD MODULE MISMATCH - EXPECTED *loadmod1* FOUND *loadmod2*

Explanation: This message is issued in a message group with message IST605I. A complete description of the message group follows:

```
IST605I  ERROR FOR ID = nodename – text1 : text2
IST1612I  LOAD MODULE MISMATCH - EXPECTED loadmod1 FOUND loadmod2
IST314I  END
```

IST605I

A response sent by *nodename* contained invalid data.

text1 : *text2* specifies the RU in error, and is **RESPONSE : ACTPU** for this message group.

IST1612I

The NCP load module name, *loadmod1*, received in the ACTPU response did not match the NCP load module name, *loadmod2*, found in the VTAM definition.

System Action: *nodename* is deactivated.

Operator Response: Enter a VARY ACT,LOAD=NO command to activate the NCP with the load module used during IPL.

Programmer Response: No further recommended response.

IST1613I TYPE = *type* ATTN = *attn*

Explanation: This message is the first in a subgroup of messages that displays tuning statistics for a TCP/IP resource. A complete description of the message group follows.

```
 IST1230I TIME     = time       DATE     = date          ID = id
 IST1613I TYPE     = type       ATTN     = attn
[IST1614I RSIO     = rsio       INPACKET = inpacket INBYTE  = inbyte
```

IST1613I

```
 IST1615I ARPACKET = arpacket   ARBYTE   = arbyte   MAXRCVD = maxrcvd
 IST1616I WSIO     = wsio       OTPACKET = otpacket OUTBYTE = outbyte
 IST1617I AWPACKET = awpacket   AWBYTE   = awbyte   MAXSENT = maxsent]
[IST1618I READCCW  = readccw    PCICNT   = pcicnt
 IST1619I WRITECCW = writeccw   APPEND   = append]
[IST1653I RWSIO    = rwsio      CHWR     = chwr     CHRD    = chrd
 IST1654I INPACKET = inpacket   INBYTE   = inbyte   MAXRCVD = maxrcvd
 IST1655I OTPACKET = otpacket   OTBYTE   = otbyte   MAXSENT = maxsent]
 IST314I  END
```

IST1230I

time is the time when the record was reported, in the form hh:mm:ss:pp, where:
- *hh* is the hour
- *mm* is the minutes
- *ss* is the seconds
- *pp* is hundredths of a second.

date is the date that the record was reported. The format of *date* is based on the DATEFORM start option and is one of the following:

DATEFORM|DATEFRM=DMY
date is **DD/MM/YY**.

DATEFORM|DATEFRM=MDY (default)
date is **MM/DD/YY**.

DATEFORM|DATEFRM=YMD
date is **YY/MM/DD**.

id is the name of the link for which tuning statistics are being recorded, and is the name specified on the LINE definition statement in the associated channel-attached major node.

IST1613I

type is the TCP/IP resource type, which can be one of the following:

CDLC Channel data link control
CLAW Common link access to work stations
CTC Channel to channel
LCS LAN channel station

attn is the number of unsolicited attention interrupts received.

IST1614I

Note: This message is issued for CLAW, CTC, and LCS resources only.

rsio is the number of READ start I/Os issued.

inpacket is the number of inbound TCP/IP packets received.

inbyte is the number of inbound TCP/IP bytes received.

IST1615I

Note: This message is issued for CLAW, CTC, and LCS resources only.

arpacket is the average number of TCP/IP packets received.

arbyte is the average number of TCP/IP bytes received.

maxrcvd is the largest TCP/IP packet received.

IST1616I

Note: This message is issued for CLAW, CTC, and LCS resources only.

wsio is the number of WRITE start I/Os issued.

otpacket is the number of outbound TCP/IP packets sent.

outbyte is the number of outbound TCP/IP bytes sent.

IST1617I

Note: This message is issued for CLAW, CTC, and LCS resources only.
awpacket is the average number of TCP/IP packets sent.
awbyte is the average number of TCP/IP bytes sent.
maxsent is the largest TCP/IP packet sent.

IST1618I

Note: This message is issued for CLAW resources only.
readccw is the number of READ CCWs used.
pcicnt is the number of PCI interrupts received.

IST1619I

Note: This message is issued for CLAW resources only.
writeccw is the number of WRITE CCWs issued.
append is the number of WRITE appends done.

IST1653I

Note: This message is issued for CDLC resources only.
rwsio is the number of read/write SIOs issued.
chwr is the total number of write channel programs issued.
chrd is the total number of read channel programs issued.

IST1654I

Note: This message is issued for CDLC resources only.
inpacket is the number of inbound TCP/IP packets received.
inbyte is the number of inbound TCP/IP bytes received.
maxrcvd is the largest TCP/IP packet received.

IST1655I

Note: This message is issued for CDLC resources only.
otpacket is the number of outbound TCP/IP packets sent.
otbyte is the number of outbound TCP/IP bytes sent.
maxsent is the largest TCP/IP packet sent.

System Action: Processing continues

Operator Response: None

Programmer Response: None

IST1614I **RSIO =** *rsio* **INPACKET =** *inpacket* **INBYTE =** *inbyte*

Explanation: VTAM issues this message as part of a message subgroup. The first message in the group is IST1613I. See the explanation of that message for a complete description of the subgroup.

IST1615I **ARPACKET =** *arpacket* **ARBYTE =** *arbyte* **MAXRCVD =** *maxrcvd*

Explanation: VTAM issues this message as part of a message subgroup. The first message in the group is IST1613I. See the explanation of that message for a complete description of the subgroup.

IST1616I WSIO = *wsio* **OTPACKET =** *otpacket* **OUTBYTE =** *outbyte*

Explanation: VTAM issues this message as part of a message subgroup. The first message in the group is IST1613I. See the explanation of that message for a complete description of the subgroup.

IST1617I AWPACKET = *awpacket* **AWBYTE =** *awbyte* **MAXSENT =** *maxsent*

Explanation: VTAM issues this message as part of a message subgroup. The first message in the group is IST1613I. See the explanation of that message for a complete description of the subgroup.

IST1618I READCCW = *readccw* **PCICNT =** *pcicnt*

Explanation: VTAM issues this message as part of a message subgroup and is only issued for TCP/IP resource type CLAW. The first message in the group is IST1613I. See the explanation of that message for a complete description of the subgroup.

IST1619I WRITECCW = *writeccw* **APPEND =** *append*

Explanation: VTAM issues this message as part of a message subgroup and is only issued for TCP/IP resource type CLAW. The first message in the group is IST1613I. See the explanation of that message for a complete description of the subgroup.

IST1621I DUPLICATE CP NAME: *cpname* **FOR ID =** *puname*

Explanation: VTAM issues this message in response to VARY ACT of a PU (or major node containing the PU) when the network-qualified name of this node and the network-qualified name of the remote node are found to be the same. This message is followed by message IST259I.

cpname is the network-qualified name of the node that the PU represents.

puname is the name of the PU being activated.

System Action: Processing continues, but the specified PU is in an INOP condition.

Operator Response: Save the system log for problem determination.

Programmer Response: Determine which remote node has the same fully-qualified network name as this node, and change one of the names.

IST1622I DLCADDR SUBFIELD *subfield_id* **NOT VALID -** *subfield_description*

Explanation: VTAM issues this message as part of a group of messages. The first message in the group is IST1166I. See the explanation of that message for a complete description.

IST1623I DUPLICATE DLCADDR SUBFIELD *subfield_id* **-** *subfield_description*

Explanation: VTAM issues this message as part of a group of messages. The first message in the group is IST1166I. See the explanation of that message for a complete description.

IST1624I DLCADDR SUBFIELD *subfield_id* **NOT SPECIFIED -** *subfield_description*

Explanation: VTAM issues this message as part of a group of messages. The first message in the group is IST1166I. See the explanation of that message for a complete description.

IST1625I STORAGE ADDRESS *address* **IS UNAVAILABLE**

Explanation: This message is issued in response to a DISPLAY VTAMSTOR,ADDRESS command. *address* points to storage which would result in a protection exception if accessed.

This message may be issued at two different points during processing of the command. If the address of the storage for the length specified has any protection exceptions, this message will be issued in response to the command. If processing for the command begun issuing messages, this message will be issued following IST1574I and then the message group will be terminated with IST314I.

System Action: None

Operator Response: None

Programmer Response: None

IST1626I ALL DATA IN *structure_name* **FOR** *appl_name* **REMOVED**

Explanation: This message is the first of a group of messages VTAM issues when data owned by a multi-node persistent session (MNPS) application program is deleted from a MNPS coupling facility structure after a VTAM failure. The second message in the group gives the reason the data was deleted. A complete description of the message group follows.

```
 IST1626I ALL DATA IN structure_name FOR appl_name REMOVED
[IST1627I MULTI-NODE PERSISTENT SESSION TIMER EXPIRED]
[IST1628I DATA WAS IN AN UNRECOVERABLE STATE -  state]
 IST314I END
```

IST1626I

structure_name is the coupling facility structure from which the data was deleted.

appl_name is the network-qualified name of the application program that owned the deleted data.

IST1627I

The MNPS application program was not recovered within the time specified by the persistent timer. The persistent timer is set using the PSTIMER option on SETLOGON OPTCD=PERSIST.

IST1628I

state can be one of the following:

Cleanup
Another VTAM cleaned up the data when it failed.

Disabled
At the time of the VTAM failure, the application had not issued SETLOGON OPTCD=PERSIST.

Suspect
At the time of the VTAM failure either the structure was being rebuilt or the VTAM did not have connectivity to the structure.

Terminate
The application had closed its ACB, in a non-persistent manner, but not all the MNPS sessions or connections were terminated when the VTAM failed.

System Action: Processing continues.

Operator Response: None.

Programmer Response: None.

IST1627I MULTI-NODE PERSISTENT SESSION TIMER EXPIRED

Explanation: This message is part of a subgroup of messages that VTAM issues in when data has been deleted from the multi-node persistent session coupling facility structure. See the explanation of message IST1626I for a complete description of the message subgroup.

IST1628I DATA WAS IN AN UNRECOVERABLE STATE - *state*

Explanation: This message is part of a subgroup of messages that VTAM issues in when data has been deleted from the multi-node persistent session coupling facility structure. See the explanation of message IST1626I for a complete description of the message subgroup.

IST1629I MODSRCH = *modsrch_value*

Explanation: VTAM issues this message in response to a DISPLAY ID command for a model application program or a dynamic application program. *modsrch_value* specifies the current value of the MODSRCH operand, and can be FIRST, LAST, or NEVER. See *z/OS Communications Server: SNA Resource Definition Reference* for more information about the MODSRCH operand for the application program major node.

System Action: Processing continues.

Operator Response: None.

Programmer Response: None.

IST1630I *name* **ACTIVATION FAILED - HPR=RTP REQUIRED WITH HPDT MPC**

Explanation: VTAM issues this message in response to VARY ACT of a PU or a major node when VTAM or the local PU is not configured for HPR RTP support, and the MPC group that the PU or major node will be using for connectivity provides HPDT support. If the activation failure is for a PU, this message is followed by IST259I.

name is the name of the PU or major node for which the activation failed.

System Action: Processing continues. If the activation failure is for a PU, the specified PU is in an INOP condition.

Operator Response: Reconfigure VTAM or the PU to support HPR=RTP, or reconfigure the TRLE that the PU references to specify MPCLEVEL=NOHPDT. The VARY ACT command may then be entered again.

Programmer Response: None.

IST1631I *trlename* **SUBCHANNEL** *cua status*

Explanation: This message is issued when the status of a TRLE subchannel changes.

trlename is the name of the TRLE that contains the subchannel.

cua is the subchannel address.

status is the subchannel address status, and can be one of the following:

DATA DEVICE NOT FOUND
The data subchannel for an OSA-Express adapter was not found by MVS.

DATA DEVICE PATH INVALID
The data subchannel for an OSA-Express adapter has an invalid path.

DATA DEVICE TYPE INVALID
The data subchannel for an OSA-Express adapter is not of type OSD.

DEVICE ALREADY ALLOCATED
The subchannel is already in use.

DEVICE NOT FOUND
The subchannel was not found by MVS.

INVALID DEVICE TYPE
The subchannel device type does not match the characteristics of the TRLE.

IQDIO CULA UNAVAILABLE
The data subchannel for HyperSockets (IQDIO) is missing the Control Unit Logical Address (CULA).

NO PATH AVAILABLE
There is no path available to the subchannel.

NO STORAGE TO ALLOCATE
There is insufficient storage available to activate the subchannel.

OFFLINE
Deactivation processing has completed and MVS acknowledges that the subchannel is OFFLINE.

OFFLINE.PENDING
An MVS VARY OFFLINE command is issued for a subchannel and VTAM and MVS are in the process of completing deallocation for the subchannel.

ONLINE
An MVS VARY ONLINE command is issued for a subchannel and VTAM successfully completes activation for the subchannel.

OPEN FOR DEVICE FAILED
The attempt to activate the subchannel failed.

REACCESSIBLE
An INOP situation occurs and MVS deactivates and then reactivates a subchannel without operator intervention.

System Action: None.

Operator Response:

For NO PATH AVAILABLE
Ensure that all devices are ONLINE and have PATHs available before attempting reactivation.

For OFFLINE
Issue an MVS VARY ONLINE command to gain usage of this subchannel for this device. If activation succeeded or is pending for this TRLE, no further response is needed. The subchannel will be dynamically made available to the TRLE when it comes ONLINE. If activation failed, attempt reactivation after varying the channel online.

Programmer Response:

For DATA DEVICE PATH INVALID or DATA DEVICE TYPE INVALID
Ensure that DATAPATH subchannels on the TRLE for an OSA-Express adapter have been properly defined as OSD devices.

For DEVICE ALREADY ALLOCATED
Ensure that the same subchannel is not used for multple devices.

For DEVICE NOT FOUND or DATA DEVICE NOT FOUND
Ensure that the subchannel address indicated has been defined to MVS.

For INVALID DEVICE TYPE
Ensure that the subchannel address indicated was defined to MVS with a type that matches the TRLE containing this subchannel. For example, if the subchannel is to an OSA adapter, ensure that the type of the subchannel is OSD or OSE.

For IQDIO CULA UNAVAILABLE
Contact the IBM Software Support Center.

For NO STORAGE TO ALLOCATE
A storage shortage unrelated to this device activation has occurred. Attempt to determine the reason for the storage shortage.

For OPEN FOR DEVICE FAILED
Contact the IBM Software Support Center.

IST1632I VPACING = *value*

Explanation: This message is issued in response to a DISPLAY ID command for an application program.

value is the VPACING value coded on the APPL definition statement.

System Action: Processing continues.

Operator Response: None

Programmer Response: None

IST1633I ASRCVLM = *asrcvlm*

Explanation: This message is issued in response to a DISPLAY ID command for an application program.

asrcvlm is the ASRCVLM value coded on the APPL definition statement.

System Action: Processing continues.

Operator Response: None

Programmer Response: None

IST1634I DATA SPACE USAGE: CURRENT = *dscurrent* **MAXIMUM =** *dsmax*

Explanation: This message is issued in response to a DISPLAY ID command for an application program.

dscurrent is the number of bytes currently being used in the application's data space. If multiple ACBs are opened within the address space, *dscurrent* represents the total usage for all ACBs.

dsmax is a maximum number of bytes used by the application's data space.

System Action: Processing continues.

Operator Response: None

Programmer Response: The value of *dsmax* can be used to tune the ASRCVLM operand on the APPL definition statement.

IST1635I {PLU|SLU} HSCB TYPE: *hscbtype* **LOCATED AT ADDRESS X'***hscbaddr*

Explanation: This message is part of a group of messages that VTAM issues in response to a DISPLAY SESSIONS,SID command. The first message of the group is IST879I. See the explanation of that message for a complete description.

IST1636I PACING STAGE(S) AND VALUES:

Explanation: This message is part of a group of messages that VTAM issues in response to a DISPLAY SESSIONS,SID command. The first message of the group is IST879I. See the explanation of that message for a complete description.

IST1637I PLU--STAGE 1--SLU

Explanation: This message is part of a group of messages that VTAM issues in response to a DISPLAY SESSIONS,SID command. The first message of the group is IST879I. See the explanation of that message for a complete description.

IST1638I *stage***: PRIMARY TO SECONDARY DIRECTION -** *pacingtype*

Explanation: This message is part of a group of messages that VTAM issues in response to a DISPLAY SESSIONS,SID command. The first message of the group is IST879I. See the explanation of that message for a complete description.

IST1639I PRIMARY SEND: CURRENT = *pscur* **NEXT =** *psnext*

Explanation: This message is part of a group of messages that VTAM issues in response to a DISPLAY SESSIONS,SID command. The first message of the group is IST879I. See the explanation of that message for a complete description.

IST1640I SECONDARY RECEIVE = *srcvcnt*

Explanation: This message is part of a group of messages that VTAM issues in response to a DISPLAY SESSIONS,SID command. The first message of the group is IST879I. See the explanation of that message for a complete description.

IST1641I *stage*: **SECONDARY TO PRIMARY DIRECTION -** *pacingtype*

Explanation: This message is part of a group of messages that VTAM issues in response to a DISPLAY SESSIONS,SID command. The first message of the group is IST879I. See the explanation of that message for a complete description.

IST1642I **SECONDARY SEND: CURRENT =** *sscur* **NEXT =** *ssnext*

Explanation: This message is part of a group of messages that VTAM issues in response to a DISPLAY SESSIONS,SID command. The first message of the group is IST879I. See the explanation of that message for a complete description.

IST1643I **PRIMARY RECEIVE =** *prcvcnt*

Explanation: This message is part of a group of messages that VTAM issues in response to a DISPLAY SESSIONS,SID command. The first message of the group is IST879I. See the explanation of that message for a complete description.

IST1644I **PLU--STAGE 1-----I-----STAGE 2--SLU**

Explanation: This message is part of a group of messages that VTAM issues in response to a DISPLAY SESSIONS,SID command. The first message of the group is IST879I. See the explanation of that message for a complete description.

IST1645I **PLU--STAGE 1-----I-----STAGE 2-----I-----STAGE 3--SLU**

Explanation: This message is part of a group of messages that VTAM issues in response to a DISPLAY SESSIONS,SID command. The first message of the group is IST879I. See the explanation of that message for a complete description.

IST1646I *servicefunction* **FAILED FOR SOCKET DESCRIPTOR** *desc*

Explanation: This message is the first of a subgroup of messages that VTAM issues when an MVS z/OS UNIX socket call fails.

Message IST1648I is issued if the MVS z/OSUNIX socket call failed on behalf of an LU-LU session. If message IST1648I is not issued, the request was for a process associated with the functioning of the entire major node.

A complete description of the message group follows:

```
 IST1646I service function FAILED FOR SOCKET DESCRIPTOR desc
 IST1647I RETURN VALUE rv RETURN CODE rc  REASON CODE reason
[IST1648I LOCAL LU = nodename1 REMOTE LU = nodename2]
 IST314I END
```

IST1646I

service is the name of the MVS z/OSUNIX callable service that failed.

function is the name of the function that the callable service performs.

desc is the socket descriptor for which the callable service was issued.

IST1647I

rv is the MVS z/OS UNIX return value for the callable service.

rc is the MVS z/OS UNIX return code for the callable service.

reason is the MVS z/OS UNIX reason code for the callable service.

IST1648I

nodename1 is the network-qualified name of the local LU.

nodename2 is the network-qualified name of the remote LU.

System Action: If the failure occurred on an LU-LU session, the session is terminated. If the failure occurred for a process global to the TCP/IP major node, the entire TCP/IP PU is deactivated.

Note: If you receive message IST1646I with a socket descriptor of BPX1SOC and message IST1647 with return code X'7C' and reason code X'050B0146', the maximum number of socket descriptors has been exceeded. The TCP major node and all existing sessions will come down. Be sure to specify a high MAXSOCKETS value in your BPXPRM.. parmlib before activating a SNA/IP major node. Refer to *z/OS UNIX System Services Planning* for more information about specifying the MAXSOCKETS value.

Operator Response: None

Programmer Response: Consult the *z/OS UNIX System Services Programming: Assembler Callable Services Reference* manual for an explanation of the MVS z/OS UNIX call that failed and the return value (*rv*), return code (*rc*), and reason code (*reason*).

IST1647I RETURN VALUE *rv* **RETURN CODE** *rc* **REASON CODE** *reason*

Explanation: This message is part of a group of messages that VTAM issues when an MVS z/OS UNIX socket call fails. The first message in the group is IST1646I. See the explanation of that message for a complete description.

IST1648I LOCAL LU = *nodename1* **REMOTE LU =** *nodename2*

Explanation: This message is part of a group of messages that VTAM issues when an MVS z/OS UNIX socket call fails. The first message in the group is IST1646I. See the explanation of that message for a complete description.

IST1649I ORIGIN = *origin* **TARGET =** *target* **STATUS =** *status*

Explanation: VTAM issues this message as part of a message group in response to a DISPLAY TRL command for an active TRL entry using TCP/IP SAMEHOST DLC connections.

A complete description of the message group follows:

```
IST075I  NAME = nodename, TYPE = type
IST087I  TYPE = line_type, CONTROL = line_control, HPDT = hpdtvalue
IST486I  STATUS = currentstatus, DESIRED STATE = desiredstate
IST1649I   ORIGIN = origin    TARGET = target   STATUS = status
IST314I  END
```

IST075I

nodename is the name of the TRLE that was entered on the DISPLAY TRL command.

Node type is always **TRLE** for this message group.

IST087I

line_type is always **LEASED** for this message group.

line_control is always **TCP** for this message group.

hpdtvalue is always ***NA*** for this message group.

IST486I

currentstatus is the current status of the node. See the *z/OS Communications Server: IP and SNA Codes* for status information.

desiredstate is the node state that is desired. See the *z/OS Communications Server: IP and SNA Codes* for status information. If VTAM cannot determine the desired state, *desiredstate* is ******NA******.

IST1649I

origin is the name of the origin address space.

target is the name of the target address space.

status is the condition or state of the connection that is displayed. Possible values include the following:

ACTIVE
Connection is active.

INOP Connection path is inoperative.

RESET Connection path is not ready.

SLOWDN
Connection path is in slowdown.

ACTPEND
Connection is in the process of activation.

INACTPEND
Connection is in the process of deactivation.

System Action: Processing continues.

Operator Response: None.

Programmer Response: None.

IST1650I IDX INITIALIZATION FAILED FOR *trlename* **DEVICE** *device_number* **CODE** *code*

Explanation: This message is the first in a group of messages that VTAM issues when an identification exchange (IDX) device failed to initialize. A complete description of the message group follows.

```
IST1650I    IDX INITIALIZATION FAILED FOR trlename DEVICE device_number CODE code
IST1651I    IDX RECEIVED BY VTAM:
IST1574I    offset hexdata_1 hexdata_2 hexdata_3 hexdata_4 EBCDIC_data
:
IST1574I    offset hexdata_1 hexdata_2 hexdata_3 hexdata_4 EBCDIC_data
IST1652I    IDX SENT BY VTAM:
IST1574I    offset hexdata_1 hexdata_2 hexdata_3 hexdata_4 EBCDIC_data
:
IST1574I    offset hexdata_1 hexdata_2 hexdata_3 hexdata_4 EBCDIC_data
IST314I  END
```

IST1650I

VTAM issues this message while processing an OPENPATH request unit when initializing an identification exchange (IDX) device, such as the IBM S/390 Open Systems Adapter.

trlename is the name of the device, as defined on the TRLE definition statement in the TRL major node.

device_number is the hexadecimal address of the WRITE or READ subchannel, as defined on the WRITE or READ operand on the TRLE definition statement in the TRL major node.

code indicates the reason the device failed to initialize. *code* is byte 3 of a completion code, preceded by a byte 2 value of X'40' (e.g., X'40nn' where nn is equal to *code*). The completion codes are described in the data link control (DCL) status codes section in the *z/OS Communications Server: IP and SNA Codes*.

IST1574I

This message displays the IDX received from (if preceeded by message IST1651I) or sent to (if preceded by message IST1652I) the IDX device.

offset is the hexadecimal offset within the IDX.

hexdata_1, hexdata_2, hexdata_3 and *hexdata_4* each display 4 bytes of the IDX in hexadecimal format.

EBCDIC_data displays 16 bytes of the IDX in EBCDIC format. Unprintable characters are represented by periods.

IST1651I

This message is a header for the information displayed in message IST1574I for the IDX received from the IDX device.

IST1652I

This message is a header for the information displayed in message IST1574I for the IDX sent by VTAM to the IDX device.

System Action: The IDX connection is not established.

Operator Response: Save the system log and print the TRL major node definition for problem determination.

For *code* 8B (insufficient storage), wait a short time and reenter the command. If VTAM continues to issue this message, enter the DISPLAY STORUSE and DISPLAY CSM commands. Save the system log and dump for problem determination.

Programmer Response: For *code* 82, verify that the subchannel address in the I/O generation and in the TRL major node are correct.

For *code* 8B (insufficient storage):

- See the *z/OS Communications Server: SNA Migration* for help to determine the storage requirements for VTAM.
- See the *z/OS Communications Server: SNA Resource Definition Reference* for a description of VTAM start options.
- See the *z/OS Communications Server: SNA Operation* for information about the DISPLAY STORUSE Command, the DISPLAY CSM Command, the MODIFY CSM Command, and the MODIFY VTAMOPTS Command.
- See the *z/OS Communications Server: SNA Diagnosis Vol 2, FFST Dumps and the VIT* for information about analyzing dumps or about analyzing storage using the VIT analysis tool if external trace is active.

For *code* 8C, verify that the TRL major node name is configured correctly in the IDX device.

For an apparent software problem, take the following actions:

- If you have access to IBMLink, search for known problems in this area. If no applicable matches are found, report the problem to IBM using the Electronic Technical Report (ETR) option on IBMLink.
- If you do not have access to IBMLink, report the problem to the IBM software support center.

IST1651I IDX RECEIVED BY VTAM:

Explanation: VTAM issues this message as part of a group of messages. The first message in the group is IST1650I. See the explanation of that message for a complete description.

IST1652I IDX SENT BY VTAM:

Explanation: VTAM issues this message as part of a group of messages. The first message in the group is IST1650I. See the explanation of that message for a complete description.

IST1653I RWSIO = *rwsio* **CHWR =** *chwr* **CHRD =** *chrd*

Explanation: VTAM issues this message as part of a message subgroup. The first message in the group is IST1613I. See the explanation of that message for a complete description of the subgroup.

IST1654I INPACKET = *inpacket* **INBYTE =** *inbyte* **MAXRCVD =** *maxrcvd*

Explanation: VTAM issues this message as part of a message subgroup. The first message in the group is IST1613I. See the explanation of that message for a complete description of the subgroup.

IST1655I OTPACKET = *otpacket* **OTBYTE =** *otbyte* **MAXSENT =** *maxsent*

Explanation: VTAM issues this message as part of a message subgroup. The first message in the group is IST1613I. See the explanation of that message for a complete description of the subgroup.

IST1656I VTAMTOPO = *value*, **NODE REPORTED -** *status*

Explanation: VTAM issues this message as part of a subgroup of messages in response to a DISPLAY ID, DISPLAY MODELS, or a MODIFY RESOURCE command for an NCP, XCA, switched, or model major node, or for a LINE or PU defined in one of those major nodes.

This message is the first message in the subgroup. A full description of the message subgroup follows:

```
 IST075I       NAME = name, TYPE = type
:
 IST1656I      VTAMTOPO = value, NODE REPORTED - status
[IST1657I        MAJOR NODE VTAMTOPO = value]
```

IST075I

name is the name of the resource or ID type that is displayed.

See Chapter 15, “Node and ID types in VTAM messages” on page 697 for a description of *type*.

IST1656I

This message indicates the current VTAMTOPO value for the displayed major or minor node and whether the node is reported to a network management application as part of the SNA local topology.

value is the current reporting designation for *name* in message IST075I and can be one of the following:
- IGNORE
- INCLUDE
- NOSWPUS
- NOLLINES
- REPORT
- NOREPORT.

status specifies whether *name* is reported as part of SNA local topology, and can be either YES or NO.

IST1657I

This message is issued when *name* in message IST075I is a LINE or PU defined in an NCP, XCA, or switched major node, and *status* in IST1656I may be determined by the VTAMTOPO value of the major node.

value is the current VTAMTOPO value for the major node and can be one of the following:
- IGNORE
- INCLUDE
- NOSWPUS
- NOLLINES
- REPORT
- NOREPORT.

System Action: Processing continues.

Operator Response: None.

Programmer Response: None.

IST1657I MAJOR NODE VTAMTOPO = *value*

Explanation: VTAM issues this message as part of a subgroup of messages in response to a DISPLAY ID or a MODIFY RESOURCE command for a PU or a LINE defined in an NCP, XCA, or switched major node.

The first message in the group is IST1656I. See the description of that message for a complete description of the subgroup.

IST1658I XID3 NEGOTIATION ERROR - DEVICE *devicename* **- SENSE =** *code*

Explanation: This message is the first of a group of messages that VTAM issues when it detects an XID3 negotiation error during activation of a TCP/IP over CDLC connection. A complete description of the message group follows:

```
 IST1658I XID3 NEGOTIATION ERROR - DEVICE devicename - SENSE = code
 IST1580I  XID RECEIVED BY VTAM:
 IST1574I    offset hexdata_1 hexdata_2 hexdata_3 hexdata_4 EBCDIC_data
⋮
 IST1574I    offset hexdata_1 hexdata_2 hexdata_3 hexdata_4 EBCDIC_data
[IST1583I      BYTE OFFSET OF FIRST BYTE IN ERROR = byteoffset
 IST1584I      BIT OFFSET OF FIRST BIT IN ERROR = bitoffset]
[IST1582I    CONTROL VECTOR X'22' ANALYSIS:
 IST1583I      BYTE OFFSET OF FIRST BYTE IN ERROR = byteoffset
 IST1584I      BIT OFFSET OF FIRST BIT IN ERROR = bitoffset]
[IST1586I  XID SENT BY VTAM:
 IST1574I    offset hexdata_1 hexdata_2 hexdata_3 hexdata_4 EBCDIC_data
⋮
 IST1574I    offset hexdata_1 hexdata_2 hexdata_3 hexdata_4 EBCDIC_data]
 IST314I  END
```

IST1659I

IST1658I

An XID3 negotiation error has been detected by VTAM during activation of a TCP/IP over CDLC connection with CDLC device *devicename*.

code is the sense code and indicates the reason for the failure. See the *z/OS Communications Server: IP and SNA Codes* for a description of *code*.

IST1580I

This message is a header for the information displayed in messages IST1574I and IST1582I through IST1586I for the XID3 received from the CDLC device.

IST1574I

This message displays the XID3 received from (if preceded by message IST1651I) or sent to (if preceded by message IST1652I) the CDLC device.

offset is the hexadecimal offset within the XID3.

hexdata_1, *hexdata_2*, *hexdata_3* and *hexdata_4* each display 4 bytes of the XID3 in hexadecimal format.

EBCDIC_data displays 16 bytes of the XID3 in EBCDIC format. Unprintable characters are represented by periods.

IST1582I

This message is a header for the information displayed in messages IST1583I and IST1584I. Messages IST1582I through IST1584I are present only if CV X'22' is present in the XID3.

IST1583I

byteoffset is the hexadecimal offset of the byte containing the error, as determined by the CDLC device. Offsets are from byte 0 within the XID3.

IST1584I

bitoffset is the hexadecimal offset of the bit containing the error, as determined by the CDLC device. Offsets are from bit 0 within the XID3.

IST1586I

This message is a header for the information displayed in message IST1574I for the XID3 sent by VTAM to the CDLC device. This message is issued only if the host either detected a mismatch between the sent XID3 and the received XID3, or if a CV X'22' is present in the received XID3.

System Action: Activation of the TCP/IP over CDLC connection halts. TCP/IP continues.

Operator Response: Notify system programmer.

Programmer Response: This is normally a configuration problem, probably caused by an incompatibility between the definitions in the PROFILE.TCPIP and the definitions in the NCP generation. The sense code indicates the reason for the failure. Correct the problem and restart the TCP/IP over CDLC connection.

The received XID3 may contain a CV X'22' (See System Network Architecture Formats, GA27-3136). Presence of the CV X'22' indicates that the CDLC device rejected the XID3 sent from the host. The CV X'22' contains an offset (from the start of the XID3 sent by VTAM) to the unacceptable field.

IST1659I DATA SPACE *dspname* **DSPSIZE =** *dspsize actsize*

Explanation: VTAM issues this message as part of a group of messages in response to a MODIFY or START command for the VTAM internal trace with a MODE=INT operand. This message follows message IST315I. See the explanation of IST315I for a complete description of this message group.

System Action: Processing continues.

Operator Response: None.

Programmer Response: None.

IST1660A ENTER PASSWORD FOR *command cmdtype*

Explanation: VTAM issues this message when the DISPLAY APING command is entered with the PASSWORD parameter. The operator must reply with the 1-8 character password for LU6.2 conversation level security.

command is the operator command entered.

cmdtype is the operator command type entered.

System Action: VTAM processing continues. Message IST1660A remains outstanding and the DISPLAY APING command does not complete until the operator replies with the password.

Operator Response: Reply with the 1-8 character password.

Programmer Response: None.

IST1661I *parameter* **PARAMETER NOT VALID FROM PROGRAM OPERATOR**

Explanation: This message is the first in a group of messages that VTAM issues when a DISPLAY APING command is entered with the PASSWORD parameter from a Program Operator Application (POA). Since there is no capability to supress the password from displaying via the Program Operator Interface, the command is failed. A full description of the message group follows.

```
IST1661I parameter PARAMETER NOT VALID FROM PROGRAM OPERATOR
IST1663I command cmdtype COMMAND FAILED - reason
IST314I END
```

IST1661I

parameter is the parameter entered on the command.

IST1663I

command is the operator command entered.

cmdtype is the operator command type entered.

reason is one of the following values:

SECURITY VIOLATION

Processing the DISPLAY APING command as entered would allow the password to be displayed in the Program Operator Application log, which is a security exposure.

System Action: VTAM rejects the command.

Operator Response: Reenter the command without the PASSWORD parameter or enter the command with the PASSWORD parameter from an MVS console.

Programmer Response: None.

IST1662I *parameter* **PARAMETER VALUE NOT ALLOWED**

Explanation: This message is the first in a group of messages that VTAM issues when a DISPLAY APING command is entered from the MVS console with a value specified on the PASSWORD parameter (i.e. PASSWORD=xxxxx). Since entering the password value on the command causes it to be displayed on the console and in the system log, which is a security exposure, the command is failed. A full explanation of the message group follows.

```
IST1662I parameter PARAMETER VALUE NOT ALLOWED
IST1663I command cmdtype COMMAND FAILED - reason
IST314I END
```

IST1662I

parameter is the parameter entered on the command.

IST1663I

command is the operator command entered.

cmdtype is the operator command type entered.

reason is one of the following values:

SECURITY VIOLATION

Processing the DISPLAY APING command as entered would allow the password to be displayed in the system log, which is a security exposure.

System Action: VTAM rejects the command.

Operator Response: Reenter the command from an MVS console without a value specified on the PASSWORD parameter.

Programmer Response: None.

IST1663I *command cmdtype* **COMMAND FAILED -** *reason*

Explanation: VTAM issues this message when a DISPLAY APING command is entered with the PASSWORD parameter and the command is rejected. When it is issued as part of a message group the first message in the group is either IST1661I, IST1662I, or IST1664I. See the explanation of those messages for a complete description. A full description of the message when it is issued alone follows.

command is the operator command entered.

cmdtype is the operator command type entered.

reason is one of the following values:

WTOR FAILURE

An internal VTAM failure occurred attempting to issue WTOR message IST1660A.

System Action: VTAM rejects the command.

Operator Response: Reenter the command. If the command continues to fail with this reason, save the system log for problem determination and contact the system programmer.

Programmer Response: If the command fails repeatedly, contact the IBM Software Support Center.

IST1664I PASSWORD MUST BE 1-8 CHARACTERS

Explanation: This message is the first in a group of messages that VTAM issues when a blank password for DISPLAY APING is entered in reply to message IST1660A. A full explanation of the message group follows.

```
IST1664I PASSWORD MUST BE 1-8 CHARACTERS
IST1663I command cmdtype COMMAND FAILED - reason
IST314I END
```

IST1664I

The DISPLAY APING password entered was blank. It must be 1-8 characters in length.

IST1663I

command is the operator command entered.

cmdtype is the operator command type entered.

reason is one of the following values:

PASSWORD NOT VALID

The blank password entered for DISPLAY APING is not valid. It must be 1-8 characters in length.

System Action: VTAM rejects the command.

Operator Response: Reenter the command and respond to message IST1660A with a valid password.

Programmer Response: None.

IST1665I CSALIMIT VALUE *value* **EXCEEDS SYSTEM CSA LIMIT**

Explanation: This message is the first in a group of messages that VTAM issues during start processing or in response to a Modify VTAMOPTS,CSALIMIT or Modify CSALIMIT command when the value specified for CSALIMIT is above the system CSA limit. See the *z/OS Communications Server: SNA Resource Definition Reference* for more information about the system CSA limit. A complete description of the message follows:

```
IST1665I CSALIMIT VALUE value EXCEEDS SYSTEM CSA LIMIT
IST1666I SYSTEM CSA LIMIT WILL BE USED FOR CSALIMIT
IST495I type HAS BEEN SET TO value
```

IST495I

type is CSALIMIT.

value is the value to be used for CSALIMIT, expressed in kilobytes.

IST1665I

value is the value specified (but rejected) for the CSALIMIT.

System Action: Processing continues with CSALIMIT set to the system CSA limit.

Operator Response: Save the system log for problem determination.

Programmer Response: Check the value specified for CSALIMIT in the start list, on the start command, or via Modify command. Use D NET,BFRUSE command if needed to see what the system CSA limit is.

IST1666I SYSTEM CSA LIMIT WILL BE USED FOR CSALIMIT

Explanation: There are two ways this message can be issued:

This message is part of a group of messages that VTAM issues during start processing or in response to a Modify VTAMOPTS, CSALIMIT or Modify CSALIMIT command when the value specified for CSALIMIT is above the system CSA limit. The first message in the group is IST1665I. See the explanation of that message for a full description.

This message is the first in a group of messages that VTAM issues in response to a Modify VTAMOPTS,CSALIMIT or Modify CSALIMIT command when the value specified for CSALIMIT is 0. See the *z/OS Communications Server: SNA Resource Definition Reference* for more information about the system CSA limit. A complete description of the message follows:

```
IST1666I SYSTEM CSA LIMIT WILL BE USED FOR CSALIMIT
IST495I type HAS BEEN SET TO value
```

IST495I

type is CSALIMIT.

value is the value to be used for CSALIMIT, expressed in kilobytes.

System Action: Processing continues with CSALIMIT set to the system CSA limit.

Operator Response: None.

Programmer Response: None.

IST1667I SYSTEM CSA LIMIT = *sys_csa_limit*

Explanation: This message is part of a group of messages that VTAM issues in response to a DISPLAY BFRUSE command. The first message in the group is IST449I. See the explanation of that message for a full description.

IST1668I LUNAME IPADDR..PORT

Explanation: This message is the first in a group of messages that VTAM issues in response to a DISPLAY,ID TYPE=IPADDR command when multiple LUs are associated with the specified TN3270 client IP address. A complete description of the message group follows.

```
IST1668I LUNAME         IPADDR..PORT
IST1670I netid.luname   ipaddr..portno
⋮
IST314I END
```

IST1668I

Message IST1668I is a column header for IST1670I.

IST1670I

Message IST1670I is issued for each LU associated with the specified TN3270 client IP address.

netid.luname is the network-qualified name of the LU.

ipaddr is dotted decimal representation of the specified IP address.

portno is the port number associated with the IP address. The IP address and port number identify the remote TN3270 client.

System Action: Processing continues.

Operator Response: None.

Programmer Response: None.

IST1669I IPADDR..PORT *ipaddr..portno*

Explanation: This message is part of a group of messages that VTAM issues for one of the following reasons:

- In response to a DISPLAY ID command for a TN3270-connected application, CDRSC, or LU resource.
- In response to a DISPLAY ID,IDTYPE=IPADDR command when only one TN3270 client application, CDRSC, or LU is associated with the specified TN3270 client IP address.
- In response to a DISPLAY TSOUSER command for a TN3270-connected application, CDRSC, or LU resource.
- When a session setup fails as part of message group IST663I and the resource is a TN3270-connected application, CDRSC, or LU resource.

System Action: Processing continues.

Operator Response: None.

Programmer Response: None.

IST1670I *netid.luname ipaddr..portno*

Explanation: This message is issued as part of a group of messages that VTAM issues in response to a DISPLAY ID TYPE=IPADDR command when multiple LUs are associated with the specified TN3270 client IP address.

The first message in the group is IST1668I. See the description of that message for a detailed explanation.

IST1671I *subarea_number* **MAPSTO** *subarea_number*

Explanation: This message is part of a group that VTAM issues in response to a DISPLAY SAMAP command. See the explanation of message IST1321I for a complete description of the message group.

System Action: Processing Continues.

Operator Response: None.

Programmer Response: None.

IST1672I CURRENT NETWORK NODE SERVER NOT FOUND IN ACTIVE NETSRVR LIST

Explanation: VTAM issues this message as part of a group of messages, or as a stand-alone message. The first message in the group is IST1252I. See the explanation of that message for a complete description of the group. There are two cases when VTAM issues this message alone.

- This message is issued when a NETSRVR list is activated and the active NETSRVR list does not include an explicit entry for the current network node server and also does not include a nameless entry.
- This message is issued when the operator enters a MODIFY VTAMOPTS,NNSPREF=NONE command and the current NNS is the former preferred NNS, the former preferred NNS is not found in the active NETSRVR list, and the active NETSRVR list does not include a nameless entry.

System Action: Processing continues.

Operator Response: If the current network node server is the one desired, activate a network node server list that includes the current network node server. If no network node server list member includes the current network node server, contact the system programmer to code the current network node server in a network node server list member. Then activate that list.

If the current network node server is not the one desired, deactivate the CP-CP session with the current network node

server. The new network node server will be selected from the candidates specified in the active network node server list.

Programmer Response: If requested by the operator, code the name of the current network node server in a network node server list member.

IST1673I SWITCH TO PREFERRED NETWORK NODE SERVER IS COMPLETE

Explanation: VTAM issues this message as part of a group of messages issued at an end node when the end node establishes CP-CP sessions with a network node server. The first message in the group is IST1096I. See the explanation of that message for a complete description.

System Action: Processing continues.

Operator Response: None.

Programmer Response: None.

IST1674I PREFERRED NETWORK NODE SERVER = {*nodename*|NONE}

Explanation: VTAM issues this message in response to a MODIFY VTAMOPTS,NNSPREF command entered at a VTAM end node. If the command was entered with the name of an adjacent network node, the message identifies that network node as the preferred network node server for this end node. If the command was entered with the value NONE, the message indicates that no preferred network node server is currently defined for this end node.

System Action: Processing continues

Operator Response: None.

Programmer Response: None.

IST1675I ACTIVE NETSRVR LIST AND PREFERRED NN SERVER ARE MERGED

Explanation: VTAM issues this message in response to either the activation of a network node server list at an end node or the entry at an end node of a MODIFY VTAMOPTS,NNSPREF=nodename command. In the first case, the message is displayed when the network node server list being activated does not contain an explicit entry for the current preferred network node server. In the second case, the message is displayed when the network node being defined as this end node's preferred network node server is not explicitly defined in the currently active network node server list.

In both cases, the message indicates that the preferred network node server and the contents of the network node server list member have been merged into a single list.

System Action: Processing continues.

Operator Response: None.

Programmer Response: None.

IST1676I SWITCH TO PREFERRED NETWORK NODE SERVER FAILED - CODE = *code*

Explanation: This message is issued when this end node has attempted but failed to switch CP-CP sessions from its current network node server to its preferred network node server. When it is issued as part of a message group the first message in the group is IST1110I. See the explanation of that message for a complete description of the message group. The following is a full description of the message when it is issued alone.

code is the code associated with the failure:

4 There is no active CP-capable link to the preferred server.

8 Refer to the sense code in message IST1280I to determine the reason for the failure.

12 The switch to the preferred network node server specified by the MODIFY VTAMOPTS,NNSPREF command currently being processed has been terminated because a later MODIFY VTAMOPTS,NNSPREF command has superseded it.

16 The switch of CP-CP sessions to the adjacent CP specified on the NNSPREF start option failed because the adjacent CP is actually an end node. CP-CP sessions between adjacent end nodes (EN) are not allowed.

System Action: Processing continues.

Operator Response: The operator response is determined by the error code:

4 Activate a CP-capable link from the EN to the preferred network node server.

8 Save the console output and contact system programmer to determine causes for failure of CP-CP session activation attempt.

12 No action is necessary.

16 Contact the system programmer to help determine the correct value for the NNSPREF start option.

Programmer Response: None.

IST1677I PREFERRED NETWORK NODE SERVER

Explanation: VTAM issues this message as part of a group of messages in response to a DISPLAY NETSRVR command. The first message in the group is IST1252I. See the explanation of that message for a complete description.

System Action: None.

Operator Response: None.

Programmer Response: None.

IST1678I FFST NOT AVAILABLE

Explanation: This message will be issued at the end of VTAM initialization if VTAM detects that the FFST product has not been installed and activated. VTAM also issues this message in response to a DISPLAY VTAMOPTS,OPTION=* command.

System Action: Processing continues.

Operator Response: None.

Programmer Response: Although it is not required, VTAM Service highly recommends that the FFST product be installed and activated to speed the resolution of VTAM problems.

IST1679I MEDIUM = *medium*

Explanation: VTAM issues this message as part of a group when a DISPLAY ID command is entered for an external communication adapter (XCA) major node that defines an Enterprise Extender (HPR/IP) connection.

medium is the type of shared access transport facility (SATF) represented by the XCA major node. HPRIP is the only valid value for an Enterprise Extender (HPR/IP) connection.

System Action: Processing continues.

Operator Response: None.

Programmer Response: None.

IST1680I *type* **IP ADDRESS** *ip_address*

Explanation: VTAM issues this message as part of a group in response to the first VARY ACTIVATE command for an Enterprise Extender (HPR/IP) link or in response to a DISPLAY ID for

- An external communication adapter (XCA) major node that defines an Enterprise Extender (HPR/IP) port.
- A remote node connected through Enterprise Extender (HPR/IP).

type is either LOCAL or REMOTE indicating which IP address is being displayed.

ip_address is the dotted decimal value of the IP address. An ******NA****** in this field indicates that the value is not available because a line defined in the XCA major node has not been activated.

Note: This message displays once for the local address but is repeated for each remote link.

System Action: Processing continues.

Operator Response: None.

Programmer Response: None.

IST1681I **LOCAL SAP =** *local_sap* **REMOTE SAP =** *remote_sap*

Explanation: VTAM issues this message as part of a group in response to a DISPLAY ID for

- An external communication adapter (XCA) major node that defines an Enterprise Extender (HPR/IP) port.
- A remote node connected through Enterprise Extender (HPR/IP).

local_sap is the decimal value of the service access point of the local node.

remote_sap is the decimal value of the service access point of the remote node.

The SAPs, along with the *ip_address* in IST1680I, uniquely identify a link. An ******NA****** in either the *local_sap* or the *remote_sap* indicates that the value is not available because a line defined in the XCA major node has not been activated.

System Action: Processing continues.

Operator Response: None.

Programmer Response: None.

IST1682I **HPR/IP** *call_type* **FAILURE: ID =** *node_name*

Explanation: This message is the first message in a group of messages that VTAM issues in response to a failed activation request for an Enterprise Extender (HPR/IP) connection.

A complete description of the message group follows:

```
IST1682I HPR/IP call_type FAILURE: ID = node_name
IST1684I RETURN CODE = return_value REASON CODE = errno
IST314I  END
```

IST1682I

call_type is:

GETIBMOP
Indicates the failure of the TCP/IP API call *getibmopt*(), which returns the list of TCP/IP jobs that are running.

node_name is the name of an external communication adapter (XCA) major node that defines an HPR/IP (Enterprise Extender) port.

IST1684I

return_value will always be –1, indicating an error.

errno is the Sockets Extended Return Code. Refer to the *z/OS Communications Server: IP and SNA Codes* for the Sockets Extended Return Code table.

System Action: The XCA major node is deactivated.

Operator Response: If *return_value* or *errno* indicates that the failure is a result of a temporary condition, reactivate the PU.

Programmer Response: If failure persists after reactivation attempts, examine *return_value* and *errno* to determine if the failure is a result of a system definition error or a network error. If the failure is a result of a system definition error, correct the error. If the failure is a result of a network error, contact the IP network provider.

IST1683I **HPR/IP** *connection_type* **FAILURE: ID =** *node_name* **STATUS =** *status_code*

Explanation: VTAM issues this message in response to a failed activation or inactivation request for an HPR/IP (Enterprise Extender) connection.

connection_type can be one of the following:

CALL Indicates the failure of an activation or inactivation request for an HPR/IP (Enterprise Extender) connection.

ENABLE
Indicates the failure of an activation request for an incoming call over an HPR/IP (Enterprise Extender) connection.

PORT Indicates the failure of an activation or inactivation request for an HPR/IP (Enterprise Extender) connection.

node_name is the name of an external communication adapter (XCA) major node that defines an HPR/IP (Enterprise Extender) port.

status_code indicates the cause of a failure detected by the connection manager. See the *z/OS Communications Server: IP and SNA Codes* for an explanation of what the status code means.

System Action: For call failures, the dial or activation of the PU fails. For enable and disable failures, no incoming calls can be accepted from the HPR/IP (Enterprise Extender) connection. For port failures, all lines and PUs for the port will be deactivated.

Operator Response: If *status_code* indicates that the failure is a result of a temporary condition, reactivate the PU.

Programmer Response: If failure persists after reactivation attempts, examine *status_code* to determine if the failure is a result of a system definition error or a network error. If the failure is a result of a system definition error, correct the error. If the failure is a result of a network error, contact the IP network provider.

IST1684I RETURN CODE = *return_value* **REASON CODE =** *errno*

Explanation: This message is part of a group of messages. See the explanation of message IST1682I for a complete description of the group.

System Action: Processing continues.

Operator Response: None.

Programmer Response: None.

IST1685I TCP/IP JOB NAME = *jobname*

Explanation: VTAM issues this message in response to the first VARY ACTIVATE command for an Enterprise Extender (HPR/IP) link or in response to a DISPLAY ID command for an external communication adapter (XCA) major node that defines an Enterprise Extender (HPR/IP) connection.

jobname is the 1-8 character TCP/IP job name used to start the TCP/IP address space. When using HPR over IP, VTAM acts as a TCP/IP application. Consequently, VTAM must know the job name of TCP/IP. See the *z/OS Communications Server: IP Configuration Guide* for information about the TCP/IP job name.

System Action: Processing continues.

Operator Response: None.

Programmer Response: None.

IST1686I NO USABLE TCP/IP JOB AVAILABLE FOR HPR/IP

Explanation: VTAM issues this message in response to a failed activation request for an HPR/IP (Enterprise Extender) connection because no usable TCP/IP job is running.

When using HPR over IP, VTAM acts as a TCP/IP application. Consequently, VTAM must know the job name of TCP/IP.

If the TCPNAME start or modify option was specified, this message is issued when the TCP/IP job specified as a start or modify option is not running, has the wrong version, or has the wrong status.

If the TCPNAME start or modify option was not specified, VTAM issues this message when it was unable to find an executing TCP/IP job with an acceptable version and status.

The job name is specified on the TCPIPJOBNAME statement in the TCP/IP data file. See the *z/OS Communications Server: IP Configuration Guide* for information about the TCPIPJOBNAME statement.

System Action: The HPR/IP (Enterprise Extender) port will not be activated.

Operator Response: Check the status of the TCP/IP jobs by issuing the DISPLAY TCPIP command. Issue the

MODIFY VTAMOPTS command to change the TCP/IP job name that will be used. Then repeat the activation command for the Enterprise Extender. See the *z/OS Communications Server: IP Configuration Guide* for more information about the DISPLAY TCPIP command.

Programmer Response: None.

IST1687I HPR/IP PORT NOT AVAILABLE

Explanation: VTAM issues this message in response to a failed activation request for an HPR/IP (Enterprise Extender) connection because one or more of the five ports required for HPR/IP (Enterprise Extender) are not available.

The ports reserved for use by HPR/IP (Enterprise Extender) are decimal port numbers:

12000 LDLC signal traffic

12001 Network-priority data

12002 High-priority data

12003 Medium-priority data

12004 Low-priority data

System Action: The HPR/IP (Enterprise Extender) port will not be activated.

Operator Response: Issue the TCP/IP command NETSTAT SOCKETS to display the TCP/IP applications and the ports they are using. Stop the TCP/IP applications that are using any of the HPR/IP (Enterprise Extender) ports. Then repeat the activation command for the Enterprise Extender. See the *z/OS Communications Server: IP Configuration Guide* for more information about the NETSTAT command.

Programmer Response: None.

IST1688I EXCESSIVE TIME *elapsed* **DETECTED FOR STRUCTURE** *structure_name*

Explanation: A coupling facility related process has not completed within *elapsed* minutes.

elapsed is the number of minutes since the process began.

structure_name is the name of the coupling facility structure to which the process is related.

The process may be one of the following:

- Connecting to *structure_name* and repopulating the data in *structure_name*
- Rebuilding *structure_name*
- Performing peer recovery for another VTAM which has failed or disconnected from *structure_name*

If VTAM has been waiting longer than 9999 minutes, *NA* is displayed for the value of *elapsed*. This message may be issued as a single message or as part of the IST1370I message group in response to DISPLAY NET,STATS,TYPE=CFS.

System Action: Processing continues.

Operator Response: This message is issued as a warning that the process may be hung. VTAM will wait at least three minutes for the process to complete before issuing this message for the first time. In general three minutes is enough time to complete any of the processes listed above. However in certain circumstances these processes may legitimately require longer than three minutes to complete. These circumstance include: performing rebuild of multiple coupling facility structures, multiple VTAMs connecting to the structure at once, multiple VTAMs disconnecting from the structure at once, or performing multiple back-to-back rebuilds. Allow extra time in these circumstances for the processes to complete before attempting to determine if a hang situation has occurred.

Hang situations may occur for the following reasons: a VTAM has failed to give a response during rebuild, a VTAM has failed to confirm a user sync point, or a VTAM has failed to free a structure lock and other VTAMs are waiting to obtain the lock.

To determine if there is a hang:

1. Issue D XCF,STRNAME=*structure_name*. Examine the output to determine if any connectors have outstanding responses or if there is an outstanding user sync point. See *z/OS UNIX System Services Command Reference* for information about the DISPLAY XCF command.
2. For documentation purposes, obtain a dump of all VTAMs in the sysplex and also dump the coupling facility structure *structure_name*.
3. Issue the VARY NET,CFS,ACTION=DISCONNECT command on the systems with outstanding responses. After all the systems have disconnected, you may issue V NET,CFS,ACTION=CONNECT to have them reconnect to *structure_name*. See *z/OS Communications Server: SNA Operation* for information about the VARY CFS command.

Programmer Response: None.

IST1689I *command_name* **FAILED - NOT CONNECTED TO** *structure_name*

Explanation: The command,*command_name*, failed for *structure_name* because VTAM is not currently connected to *structure_name*.

command_name is the name of the command that failed.

structure_name is the name of the coupling facility structure specified on *command_name*.

System Action: Processing continues.

Operator Response: Issue DISPLAY NET,STATS,TYPE=CFS to determine the coupling facility structures to which VTAM is connected.

Programmer Response: None.

IST1690I **VARY CFS FAILED - ALREADY CONNECTED TO** *structure_name*

Explanation: The VARY CFS,ACTION=CONNECT command failed because there is already an active connection to *structure_name*.

structure_name is the name of the coupling facility structure specified on the VARY CFS command.

System Action: Processing continues.

Operator Response: Issue DISPLAY NET,STATS,TYPE=CFS to determine the coupling facility structures to which VTAM is connected.

Programmer Response: None.

IST1691I **VARY CFS FAILED -** *structure_name* **IS NOT AVAILABLE**

Explanation: The VARY CFS,ACTION=CONNECT command failed because the *structure_name* is not defined in the CFRM policy or a VTAM start option (i.e. STRGR=NONE) indicated not to connect to the structure.

structure_name is the name of the coupling facility structure specified on the VARY CFS command.

System Action: Processing continues.

Operator Response: Issue DISPLAY XCF,STR to view a list of structures defined in the active CFRM policy. If *structure_name* is not listed, the structure must be defined before VTAM is able to connect. If *structure_name* is listed, issue DISPLAY NET,VTAMOPTS and find the structure's start option values (i.e. STRGR). If the value is NONE, VTAM must be restarted and the start option value must be set to *structure_name*.

See *z/OS UNIX System Services Command Reference* for more information on the DISPLAY XCF command. See *z/OS Communications Server: SNA Operation* for more information on the DISPLAY VTAMOPTS command.

Programmer Response: If *structure_name* is not defined in the CFRM policy, define the structure in the policy and reactivate it. See *z/OS MVS Setting Up a Sysplex* for information on updating and activating the CFRM policy. If the structure's start option has a value of NONE, change the value in the start list to *structure_name*. See *z/OS Communications Server: SNA Resource Definition Reference* for more information about VTAM start options.

IST1692I TCB = *taskno* **TCP PORT =** *portno*

Explanation: VTAM issues this message as part of a group of messages. The first message in the group is IST1342I. See the explanation of that message for complete description.

System Action: The command failed. Other processing continues.

Operator Response:

- Reenter the MODIFY command with the required network-qualified name specified as *netid.majnode*.

Programmer Response: None.

IST1693I NETWORK ADDRESS RECEIVED FOR *resourcename* **IN USE**

Explanation: This message is the first in a group of messages. A complete description of the message group follows.

```
IST1693I NETWORK ADDRESS RECEIVED FOR resourcename IN USE
IST1421I nodetype dupresource HAS DUPLICATE ADDRESS
IST314I END
```

IST1693I

This message is issued during cross network LU-to-LU session setup when the network address for the specified *resourcename* could not be defined. VTAM detected another resource using the network address returned by the gateway NCP for *resourcename*. The form of *resourcename* is *netid.name*.

IST1421I

nodetype is the node type of *dupresource*. See Chapter 15, “Node and ID types in VTAM messages” on page 697 for a description of *nodetype*.

dupresource is the name of the resource that is currently defined to the address in question. The form of *dupresource* is *netid.name*.

System Action: Processing continues.

Operator Response: Issue the DISPLAY ID=*dupresource*,E command to display information about the duplicate resource. Save the system log for problem determination.

Programmer Response: Check your network address assignments.

See the section about non-VTAM problems in the *z/OS Communications Server: SNA Diagnosis Vol 1, Techniques and Procedures* for additional problem determination actions.

IST1694I REASON = SEQUENCE NUMBER ERROR

Explanation: This message is part of a message group. The first message in the group is IST520I. See the explanation of that message for a complete description.

IST1695I PU NAME CP NAME COS NAME SWITCH CONGEST SESSIONS

Explanation: This message is the first of a subgroup of messages issued in response to a DISPLAY RTPS command. The output may have been filtered by the CPNAME, APPNCOS, SWITCH, CONGEST, and ID keywords. A complete description of the message subgroup follows:

```
 IST350I   DISPLAY TYPE = RTPS
 IST1695I  PU NAME       CP NAME      COS NAME SWITCH CONGEST  SESSIONS
 IST1696I  puname        cpname       appncos  switch congest  sessions
:
[IST1786I HPR ROUTE TEST INITIATED FOR RTP PU]
[IST1793I HPR ROUTE TEST NOT INITIATED - RTP PU NOT IN PROPER STATE]
[IST1794I HPR ROUTE TEST NOT INITIATED - TEST ALREADY IN PROGRESS]
[IST1795I HPR ROUTE TEST NOT INITIATED - INSUFFICIENT STORAGE]
[IST1809I HPR ROUTE TEST NOT INITIATED - INSUFFICIENT PATH INFORMATION]
 IST1454I  count RTP(S) DISPLAYED
 IST314I   END
```

IST1695I

IST350I

This message identifies the type of information in the display and is always **RTPS** for this message group.

IST1454I

count identifies the number of RTP pipes displayed in IST1696I messages.

This message is displayed whether or not the MAX operand value from the DISPLAY RTPS command has been exceeded.

IST1695I

This message is a header message for the information displayed in IST1696I.

IST1696I

One IST1696I message will be issued for each RTP.

puname is the name of the RTP pipe.

cpname is the name of the CP at the other end of the pipe.

appncos is the name of the Class of Service (COS) used for the CP-CP session.

switch indicates whether a path switch is in progress. Valid values are:

Yes Indicates that a path switch is in progress

No indicates that a path switch is not in progress

congest indicates whether the pipe is currently congested. Valid values are:

Yes Indicates that the pipe is currently congested

No Indicates that the pipe is not currently congested

sessions indicates the number of sessions using the pipe. The display output may show a pipe using the RSETUP (route setup) Class of Service. This pipe will be present between a pair of CPs that support RTP control flows. The value will always be **0** on this pipe.

IST1786I

This message is displayed when ID=name and TEST=YES are included on the DISPLAY RTPS command and Route Test for the RTP PU was successfully initiated. When the Route Test results become available, they will be displayed using the IST1787I message group.

IST1793I

This message is displayed when ID=name and TEST=YES are included on the DISPLAY RTPS command and Route Test for the RTP PU could not be initiated because the RTP PU was not in the CONNECTED state or a pathswitch was in progress.

IST1794I

This message is displayed when ID=name and TEST=YES are included on the DISPLAY RTPS command and Route Test for the RTP PU could not be initiated because a Route Test was already in progress.

IST1795I

This message is displayed when ID=name and TEST=YES are included on the DISPLAY RTPS command and Route Test for the RTP PU could not be initiated because of insufficient storage.

IST1809I

This message is displayed when ID=name and TEST=YES are included on the DISPLAY RTPS command and Route Test for the RTP PU could not be initiated because one or more virtual routing nodes exist on the HPR path, and the HPR endpoint issuing this message does not have all the path information necessary to perform a Route Test.

System Action: For IST1786I, the system will wait for the HPR Route Test to complete and subsequently issue the IST1789I message group to display the results.

For IST1793I, IST1794I, IST1795I, and IST1809I no further action is taken for the TEST=YES operand specification.

Operator Response: For IST1786I, wait for the IST1789I message group.

For IST1793I, wait for the RTP PU to reach the CONNECTED state or for pathswitch completion and reissue the DISPLAY RTPS command.

For IST1794I, wait for the previous route test for this RTP PU to complete and attempt to re-issue the DISPLAY RTPS command.

For IST1795I, enter the DISPLAY BFRUSE command to display storage used by VTAM buffer pools and information about the common service area (CSA). Total VTAM private storage information is also displayed in message IST981I. Enter the DISPLAY STORUSE command to display storage usage for storage pools. Save the system log and request a dump for problem determination.

For IST1809I, if the HPR route test function is supported by the other HPR endpoint, issue an HPR route test command from that node.

Programmer Response: For IST1795I, verify that the operator entered the buffer pool or CSA start options as specified in the start procedures. Increase storage as required. For insufficient storage errors, you can redefine your buffer pool or CSA limits. If the start option cannot be modified using the MODIFY VTAMOPTS command, modify the VTAM start options file (ATCSTRxx) and restart VTAM to use the start option.

- See the *z/OS Communications Server: SNA Migration* to determine the storage requirements for VTAM.
- See the *z/OS Communications Server: SNA Resource Definition Reference* for a description of VTAM start options.
- See the *z/OS Communications Server: SNA Operation* for information about the DISPLAY BFRUSE Command, the DISPLAY STORUSE Command, and the MODIFY VTAMOPTS command.
- See the *z/OS Communications Server: SNA Network Implementation Guide* for an explanation and description of buffer pools and for general information on buffer pool specification and allocation.
- See the *z/OS Communications Server: SNA Diagnosis Vol 2, FFST Dumps and the VIT* for information about analyzing dumps and about analyzing storage using the VIT analysis tool, if external trace is active.

IST1696I *puname cpname appncos switch congest sessions*

Explanation: This message is part of a subgroup of messages that VTAM issues in response to a DISPLAY RTPS command. The first message of the subgroup is IST1695I. See the explanation of that message for a complete description of the subgroup.

IST1697I RTP PACING ALGORITHM = ARB RESPONSIVE MODE

Explanation: VTAM issues this message as part of a group of messages in response to a DISPLAY ID command for a PU type 2.1 representing a rapid transport protocol (RTP) route.

The first message in the group is IST1476I. See the description of that message for more information.

IST1698I PROBE *probname* **ATTEMPTED - FFST NOT AVAILABLE**

Explanation: VTAM encountered an anomaly and attempted to execute the FFST probe. FFST was not active or available to service the probe request. VTAM handled the request by furnishing the identification of the probe.

probname is the name of the probe.

System Action: VTAM processing continues.

Operator Response: Save the System Log for problem determination.

Programmer Response: Determine why FFST was not active or available, then start FFST. Refer to the *z/OS Communications Server: SNA Diagnosis Vol 1, Techniques and Procedures* to determine the anomaly encountered.

IST1700I *attribute* **CONFLICTS WITH** *rtype rname*

Explanation: VTAM issues this message along with IST489I or IST1272I to indicate what type of definition error has occurred.

attribute indicates the type of definition name that was duplicated. The values that can be displayed in *attribute* are:

- NAME
- NET ADDR

- LUALIAS
- STATIONID (STATIONID refers to the IDBLOCK and IDNUM values.)
- ACBNAME
- CPNAME

rtype indicates the type of resource that has the duplicate *attribute*.

rname indicates the name of the resource that has the duplicate *attribute*.

System Action: Processing of *command* in IST489I or IST1272I continues. However, VTAM cannot use the resource indicated in IST1272I.

Operator Response: This is a definition error. Save the system log for problem determination.

This message may be issued during session takeover processing. Refer to the section about common APPN problems in the *z/OS Communications Server: SNA Diagnosis Vol 1, Techniques and Procedures* for a description of session takeover problems.

Programmer Response: If there are duplicate operands on NCP and VTAM definition statements, you must change one or both of the duplicate statements if you want both resources to be defined at the same time. Refer to the section about common APPN problems in the *z/OS Communications Server: SNA Diagnosis Vol 1, Techniques and Procedures* for more information about this problem.

IST1701I CP NAME LOCATE SIZE

Explanation: VTAM issues this message in response to a DISPLAY TOPO command when LOCSIZE is specified. This is a header message for information displayed in IST1702I.

This message group is issued in response to the DISPLAY,TOPO,LIST=NN,LOCSIZE=*locate size* command.

```
IST350I   DISPLAY TYPE = TOPOLOGY
  IST1701I  CP NAME           LOCATE SIZE
  IST1702I  cpname            locate message size
⋮
IST314I   END
```

System Action: Processing continues.

Operator Response: None.

Programmer Response: None.

IST1702I *cpname locatemessagesize*

Explanation: VTAM issues this message in response to a DISPLAY TOPO command when LOCSIZE is specified.

cpname is the name of the control point (CP) which supports the APPN Locate message size specified on the command and is a network_qualified name in the form *netid.name*.

locatemessagesize is the maximum size of APPN locate messages that *cpname* is able to support. The valid range is 1-128 kilobytes.

System Action: None.

Operator Response: None.

Programmer Response: None.

IST1703I DESIRED LOCATE SIZE = *desiredlocatesize* **LAST LOCATE SIZE =** *lastlocatesize*

Explanation: VTAM issues this message as part of a subgroup of messages in response to a DISPLAY DIRECTRY or DISPLAY ID command and the resource being displayed is a logical unit. The first message in the subgroup is IST1186I. See the explanation of that message for a complete description.

System Action: Processing continues.

Operator Response: None.

Programmer Response: None.

IST1704I SORDER = *so_value* FROM ADJACENT SSCP TABLE

Explanation: This message is displayed as part of several message groups. These message groups begin with IST611I, IST623I, IST663I, or IST1531I. See the explanations of these messages for a complete description.

IST1705I SORDER = *so_value* FROM START OPTION

Explanation: This message is displayed as part of several message groups. These message groups begin with IST611I, IST623I, IST663I, or IST1531I. See the explanations of these messages for a complete description.

IST1706I PARTNER NAME GENERIC RESOURCE MEMBER ATTRIBUTES

Explanation: This message is the first in a group of messages that VTAM issues in response to DISPLAY GRAFFIN command. A complete description of the message group follows.

```
IST350I DISPLAY TYPE = GENERIC AFFINITY
IST1706I PARTNER NAME       GENERIC RESOURCE    MEMBER     ATTRIBUTES
IST1707I partner_name       generic_name        appl_name  attributes
.
IST314I END
```

IST1706I

This message is a header message for information displayed in IST1707I.

IST1707I

partner_name is the network qualified partner LU name.

generic_name is the generic resource name of *appl_name*.

appl_name is the application to which the partner LU has an affinity.

attributes describes the attributes of the session the affinity represents. *attributes* is an eight-byte character string that has the following meaning:

1. The first character is either **P** to indicate that the generic name has been resolved but the session is pending activation, or a hyphen (**-**) otherwise.
2. The second character is either **V** to indicate that the affinity will be cleaned up by VTAM when the session is terminated, or **A** to indicate that the application is responsible for deleting the affinity. Application owned affinities might not be deleted when the session is terminated. An application owned affinity will also be deleted when the application is terminated, if the affinity is not persistent (see the fourth aattribute character)
3. The third character is either **G** to indicate that the session was started using the generic name, or **A** to indicate that the session was started using the application name.
4. The fourth character is either **6** to indicate the affinity will persist after application termination, or a hyphen (**-**) otherwise. If the affinity will persist it is the responsibility of the application to delete the affinity. An affinity can persist for one of the following reasons:
   – This is an LU6.1 session.
   – This is an LU6.2 SYNCPT session.
   – The application used the SETLOGON GNAMEADD AFFIN=APPL API command to request ownership of all affinities.
   – The application used the LUAFFIN=APPL parameter on the appropriate RAPI or APPCCMD API command to request ownership of this affinity. LUAFFIN=NOTAPPL will override the other three reasons.
5. The fifth character is either **M** to indicate that the generic resource application also supports MNPS, or a hyphen (**-**) otherwise. This affinity will not be deleted in a MNPS recovery scenario unless the recovery does not occur before the PSTIMER expires. Refer to the *z/OS Communications Server: SNA Network Implementation Guide* for more information about MNPS.
6. The sixth character indicates who created the affinity. The value will be one of the following:

   V to indicate that VTAM resolved the generic name to an application name based on session count or by setting up a session directly to a member of a generic resource group.

   W to indicate that the WorkLoad Manager resolved the generic name to an application name based on system workload.

X to indicate that the Generic Resource Resolution Exit resolved the generic name to an application name.

S to indicate that the original resolver of the name is not known. This is most likely caused by a previous search request that did not cause an affinity to be created at the time of resolution. This may also occur due to such things as VTAM losing connectivity to the coupling facility, VTAM being re-IPL'ed, a structure failure of the generic resource coupling facility structure, or following an MNPS recovery.

7. The seventh character is either **L** to indicate that this affinity will be used for up to 10 minutes after the last session between the session partners ended, or a hyphen (**-**) otherwise. An affinity might used for this extended time if either of the following is true:
   – An LU6.2session is established without SYNCPT or Limited Resource.
   – An LU6.2 session is established, but the application specified LUAFFIN=NOTAPPL on the NIB for the OPNDST or OPNSEC.
8. The eight character is not used and is always a hyphen (**-**).

System Action: Processing continues.

Operator Response: None.

Programmer Response: None.

IST1707I *partner_name generic_name appl_name attributes*

Explanation: This message is part of a message group that VTAM issues in response to a DISPLAY GRAFFIN command. The first message in the group is IST1706I. See the explanation of that message for a complete description.

System Action: Processing continues.

Operator Response: None.

Programmer Response: None.

IST1708I *command* **FAILED - GENERIC RESOURCES NOT AVAILABLE**

Explanation: This message is issued when *command* fails because the generic resource function is not available. This may be due to one of the following:

- VTAM is not in a parallel sysplex.
- The generic resource coupling facility structure in not defined in the active CFRM policy. Issue DISPLAY XCF,STR to display the structures defined in the CFRM policy.
- The STRGR start option was set to NONE. Issue DISPLAY VTAMOPTS to verify the value of the STRGR start option.

System Action: Processing continues.

Operator Response: If the generic resource function should be active, contact the system programmer.

Programmer Response: If the generic resource function is not active, see *z/OS Communications Server: SNA Network Implementation Guide* for information on how to set up generic resources.

IST1709I *command_name* **FAILED - NOT CONNECTED TO** *structure_name*

Explanation: The command, *command_name*, failed for *structure_name* because VTAM is not currently connected to *structure_name*.

command_name is the name of the command that failed.

structure_name is the name of the coupling facility structure specified on *command_name*.

System Action: Processing continues.

Operator Response: Issue DISPLAY NET,STATS,TYPE=CFS to determine the coupling facility structures to which VTAM is connected.

Programmer Response: None.

IST1710I RSCV FROM PLU SAVED AT SESSION ACTIVATION

Explanation: This message is part of a group of messages that VTAM issues in response to a DISPLAY SESSIONS,SID=sid,PATHINFO=YES command when the session has RSCV information for the PLU. See the explanation of message IST879I for a complete description of the group.

IST1711I RSCV TOWARDS SLU SAVED AT SESSION ACTIVATION

Explanation: This message is part of a group of messages that VTAM issues in response to a DISPLAY SESSIONS,SID=sid,PATHINFO=YES command when the session has RSCV information for the SLU. See the explanation of message IST879I for a complete description of the group.

IST1713I RTP RSCV IN THE DIRECTION OF THE *session_partner*

Explanation: This message is displayed in response to a DISPLAY SESSIONS,SID=sid,PATHINFO=YES command for an HPR session. It displays the RSCV for the RTP pipe. See the explanation of message IST879I for a complete description of the group.

IST1714I NO PATH INFORMATION EXISTS

Explanation: This message is displayed in response to a DISPLAY SESSIONS,SID=sid,PATHINFO=YES command but no path information exists to be displayed. See the explanation of message IST879I for a complete description of the group.

IST1715I MPCLEVEL = mpc_level MPCUSAGE = mpc_usage

Explanation: This message is part of several message groups that VTAM issues in response to DISPLAY ID or DISPLAY TRL commands.

mpc_level indicates the level of MPC connection, and can be one of the following:

- HPDT indicates that the connection is capable of performing channel I/O directly to or from communications storage manager (CSM) buffers.
- NOHPDT indicates that the connection is not capable of performing channel I/O directly to or from CSM buffers.
- QDIO (Queued Direct I/O) indicates that the connection performs channel I/O operations using direct I/O instead of CCW channel operations. An MPCLEVEL of QDIO implies that the connection is also HPDT capable, and can perform the direct I/O to or from CSM buffers.

mpc_usage indicates whether the MPC connection can be used exclusively by only one Upper Layer Protocol (ULP), or shared by multiple ULPs. It can be one of the following:

- If *mpclevel* is QDIO or HPDT, *mpc_usage* is:
  - SHARE indicates that the connection can be shared by multiple ULPs.
  - EXCLUSIVE indicates that the connection can only be used by the first ULP that requests usage of the MPC connection.
- If *mpclevel* is NOHPDT, *mpc_usage* is *****NA*****.

For detailed instructions about setting up an OSA-Express feature, refer to the *S/390: OSA-Express Customer's Guide and Reference*.

System Action: Processing continues.

Operator Response: None.

Programmer Response: None.

IST1716I PORTNAME = *port_name* **LINKNUM =** *link_num* **OSA CODE LEVEL =** *code_level*

Explanation: This message is part of several message groups that VTAM issues in response to DISPLAY ID or DISPLAY TRL commands. This message will appear if the TRLE being displayed represents an IBM OSA-Express Adapter, or an IBM Open Systems Adapter used for native access to an ATM network.

When the TRLE represents an OSA device:

- *port_name* is the port name to be assigned to the port on the IBM Open Systems Adapter. Each IBM Open Systems Adapter has one *port_name* that is represented by one TRLE.
- *link_num* indicates the relative adapter number of the OSA-Express Adapter port represented by this TRLE. For an IBM Open Systems Adapter used for native access to an ATM network, *link_num* will be N/A.
- *code_level* indicates the OSA processor code level of the OSA-Express. For some versions of OSA-Express, *code_level* will be N/A.

When the TRLE represents the IQDIO device IUTIQDIO:

- *port_name* is a reserved name of IUTIQD*xx* where *xx* = the hexadecimal IQD CHPID in use.
- *link_num* is not applicable and will be displayed as 0.
- *code_level* indicates the Internal Queued Direct Communications (IQDC) S/390 processor code level.

For detailed instructions about setting up an OSA-Express feature, refer to the *S/390: OSA-Express Customer's Guide and Reference*.

System Action: Processing continues.

Operator Response: None.

Programmer Response: None.

IST1717I ULPID = *ulp_id*

Explanation: This message is part of several message groups that VTAM issues in response to DISPLAY ID or DISPLAY TRL commands.

This message is displayed for all TRLEs that are currently being used by at least one Upper-layer Protocol (ULP). A separate IST1717I message will be displayed for each ULP using this TRLE. For a dynamic TCP TRLE, or an exclusively owned TRLE, only one message with ULPID will be issued, since there can only be one ULP using each of these TRLEs. For an OSA-Express Adapter, one message with ULPID will be issued for each Datapath channel address in use by a ULP. For other TRLEs, more than one ULPID message may be issued, depending on how many upper-layer protocols are using the TRLE.

ulp_id specifies the name of a z/OS CS upper-layer protocol (ULP) that is using the TRLE or using one of the datapath channels of an OSA-Express TRLE.

- For TCP/IP ULPs, the *ulp_id* will be the jobname.
- For ANNC ULPs, the *ulp_id* will be the SNA PU name.
- For ATM or EE ULPs, the *ulp_id* will be the XCA major node name.

For detailed instructions about setting up an OSA-Express feature, refer to the *S/390: OSA-Express Customer's Guide and Reference*.

System Action: Processing continues.

Operator Response: None.

Programmer Response: None.

IST1718I DATAPATH DEVICE *device_addr* **NOT FOUND FOR TRLE** *trle*

Explanation: The subchannel address specified on the DEVICE keyword on the MODIFY TRACE command is not coded on the DATAPATH keyword on the TRLE statement.

device_addr is the value coded on the DEVICE keyword on the MODIFY TRACE command.

trle is the name of the TRLE coded on the ID keyword on the MODIFY TRACE command.

For detailed instructions about setting up an OSA-Express feature, refer to the *S/390: OSA-Express Customer's Guide and Reference*.

System Action: The command will fail.

Operator Response: Enter a valid subchannel address on the DEVICE keyword on the MODIFY TRACE command.

Programmer Response: None.

IST1719I **PCIREALO =** *pcirealo* **PCIREAL =** *pcireal*

Explanation: VTAM issues this message as part of a group of messages that displays tuning statistics for multipath channel (MPC) attached resources. The first message in the group is IST1230I. See that message for a complete description.

For detailed instructions about setting up an OSA-Express feature, refer to the *S/390: OSA-Express Customer's Guide and Reference*.

IST1720I **PCIVIRTO =** *pcivirto* **PCIVIRT =** *pcivirt*

Explanation: VTAM issues this message as part of a group of messages that displays tuning statistics for multipath channel (MPC) attached resources. The first message in the group is IST1230I. See that message for a complete description.

For detailed instructions about setting up an OSA-Express feature, refer to the *S/390: OSA-Express Customer's Guide and Reference*.

IST1721I **SBALCNTO =** *sbalcnto* **SBALCNT =** *sbalcnt*

Explanation: VTAM issues this message as part of a group of messages that displays tuning statistics for multipath channel (MPC) attached resources. The first message in the group is IST1230I. See that message for a complete description.

For detailed instructions about setting up an OSA-Express feature, refer to the *S/390: OSA-Express Customer's Guide and Reference*.

System Action: Processing continues.

Operator Response: None.

Programmer Response: None.

IST1722I **PACKCNTO =** *packcnto* **PACKCNT =** *packcnt*

Explanation: VTAM issues this message as part of a group of messages that displays tuning statistics for multipath channel (MPC) attached resources. The first message in the group is IST1230I. See that message for a complete description.

For detailed instructions about setting up an OSA-Express feature, refer to the *S/390: OSA-Express Customer's Guide and Reference*.

IST1723I **SIGACNTO =** *sigacnto* **SIGACNT =** *sigacnt*

Explanation: VTAM issues this message as part of a group of messages that displays tuning statistics for multipath channel (MPC) attached resources. The first message in the group is IST1230I. See that message for a complete description.

For detailed instructions about setting up an OSA-Express feature, refer to the *S/390: OSA-Express Customer's Guide and Reference*.

IST1724I **I/O TRACE =** *iotrc* **TRACE LENGTH =** *length*

Explanation: This message is part of several message groups that VTAM issues in response to DISPLAY ID or DISPLAY TRL commands. This message will appear for a TRLE representing an OSA-Express Adapter.

iotrc specifies whether I/O Trace is active for this OSA-Express device (**ON** or **OFF**).

length specifies the number of bytes being recorded for I/O Trace for this OSA-Express device.

For detailed instructions about setting up an OSA-Express feature, refer to the *S/390: OSA-Express Customer's Guide and Reference*.

System Action: Processing continues.

Operator Response: None.

Programmer Response: None.

IST1725E STORAGE SHORTAGE IN *structure_name* **- UNABLE TO RECONNECT**

Explanation: This message is issued when VTAM is attempting to reconnect to a coupling facility structure. A storage shortage in the structure was detected before attempting to reconnect. A storage shortage is defined as one or more of the following:

- 80% or greater of list entries are being used.
- 80% or greater of list elements are being used.
- 80% or greater of total storage is being used.

Before VTAM will connect to the structure, the storage problem must be corrected.

structure_name is the name of the MVS coupling facility structure.

System Action: VTAM will remain disconnected from the coupling facility structure until the storage usage drops below 80%.

Operator Response: Issue D NET,STATS,TYPE=CFS,STRNAME=*structure_name* to display the storage utilization of *structure_name*.

If either entry or element utilization is greater than 80%, start a rebuild via the SETXCF START,REBUILD command. This will cause VTAM to adjust the number of entries and elements in use. See the *z/OS MVS System Commands* for more information about the SETXCF command.

If total storage utilization is greater than 80%, the size of the structure will need to be increased. See the *z/OS Communications Server: SNA Network Implementation Guide* for information about how to adjust the size in the case of a storage shortage.

To force VTAM to reconnect to the structure regardless of storage utilization, issue the V NET,CFS,ACTION=CONNECT command.

Programmer Response: None.

IST1726I CONNECTION IS PENDING DUE TO STORAGE SHORTAGE

Explanation: This message is part of a message group VTAM issues to indicate that the connection to the coupling facility structure is defined and active in the coupling facility policy but VTAM currently does not have a connection. The first message in the group is IST1367I. See the explanation of that message for additional information.

System Action: Processing continues.

Operator Response: None.

Programmer Response: None.

IST1727I DNS NAME: *dns_name*

Explanation: VTAM issues this message as part of several different message groups. It is optional and is issued for one of the following reasons:

- In response to a DISPLAY ID command for a TN3270-connected application, CDRSC, or LU resource.
- In response to a DISPLAY ID,IDTYPE=IPADDR command when only one TN3270 client application, CDRSC, or LU is associated with the specified TN3270 client IP address.
- In response to a DISPLAY TSOUSER command for a TN3270-connected application, CDRSC, or LU resource.
- When a session setup fails as part of message group IST663I and the resource is a TN3270-connected application, CDRSC, or LU resource.

If the message ends with the (..) characters, it means that the DNS name was truncated as passed to z/OS CS from the TN3270 Server. Refer to the *z/OS Communications Server: IP Configuration Guide* for information about enabling messages.

dns_name is the DNS NAME of the TN3270 client.

Operator Response: None.

Programmer Response: None.

IST1728I *dns_name_continued*

Explanation: This message is a continuation of message IST1727I. It is issued as many times as necessary to display the entire DNS name. If the message ends with the (..) characters, it means that the DNS name was truncated as passed to z/OS CS from the TN3270 Server.

dns_name_continued is the continuation of the DNS NAME displayed in IST1727I.

System Action: Processing continues.

Operator Response: None.

Programmer Response: None.

IST1729I **OPTION** *traceopt* **MUST BE CODED WHEN SUBTRACE** *subtrace* **IS SPECIFIED**

Explanation: This message is issued in response to a MODIFY TRACE,TYPE=VTAM command or when TRACE,TYPE=VTAM is specified on the TRACE start option and SUBTRACE is specified without a valid OPTION parameter on the command.

System Action: VTAM rejects the request. For start VTAM command, VTAM will issue message IST1311A to prompt you for the correct value of the TRACE or NOTRACE option.

Operator Response: Enter the command again with the trace option specified on this message to activate or inactivate the SUBTRACE type.

Programmer Response: If these start options are coded in an ATCSTRxx file, correct the trace option value for the TRACE or NOTRACE in that file. For more information about VTAM start options, see the *z/OS Communications Server: SNA Resource Definition Reference*.

IST1730I **SUBTRACE** *subtrace* **ACTIVE UNDER TRACE OPTION** *traceopt*

Explanation: This message displays the current active subtrace option and its associated trace option. VTAM issues this message as part of a group of messages. The first message in the group is IST315I. See the explanation of that message for a complete description.

Operator Response: None.

Programmer Response: None.

IST1731I *name* **ACTIVATION FAILED - HPR=RTP REQUIRED WITH HPR/IP**

Explanation: VTAM issues this message in response to a VARY ACT of an XCA major node when VTAM is not configured for HPR RTP support and the port statement defines the shared access transport facility (SATF) as MEDIUM=HPRIP (Enterprise Extender).

name is the name of the major node for which the activation failed.

System Action: Processing continues.

Operator Response: Reconfigure VTAM to support HPR=RTP, or reconfigure the XCA port to specify an SATF which does not require HPR=RTP. The VARY ACT command may then be entered again.

Programmer Response: None.

IST1732I **VTAM INITIATED SLOWDOWN TERMINATION FOR DEVICE** *device*

Explanation: This message indicates the end of a slowdown condition for a channel-attached SNA device. The time interval identified by the second subparameter of the SLOWVAL start option has expired, causing VTAM to initiate I/O to *device* to force it out of a slowdown condition. This message will be preceded by IST1733I, which indicates that the device has been in a slowdown condition longer than the time period identified by the first subparameter of the SLOWVAL start option.

device is the name of the device.

System Action: VTAM has initiated I/O to *device* to force it out of slowdown mode. VTAM will again send traffic to *device*.

Operator Response: None.

Programmer Response: If VTAM is required to initiate termination of the slowdown condition, then either 1) the signal from device to VTAM to exit slowdown has been lost or 2) the device is incapable of obtaining sufficient buffers to exit slowdown. For the first situation, VTAM's action will be sufficient to restart traffic to the device, although the lost signal should be investigated as a potential device or network problem. For the second condition, VTAM's restarting traffic to the device will only force it back into a slowdown condition if buffers are still not available. Be sure the SLOWVAL start option values are sufficiently high.

IST1733I *device* **DEVICE HAS BEEN IN SLOWDOWN MORE THAN** *time* **SECONDS**

Explanation: The threshold identified by the first subparameter of the SLOWVAL start option has been exceeded. This means that the device is not accepting data from VTAM. This message can also be received for local SNA devices, (for example, 3174 controllers).

device is the name of the device that has been in slowdown mode.

time is value of the first subparameter of the SLOWVAL start option.

System Action: Processing continues.

Operator Response: None.

Programmer Response: None.

IST1734I DEVICE *device* **INITIATED SLOWDOWN TERMINATION**

Explanation: This message indicates the end of a slowdown condition for a channel-attached SNA device. The device sent VTAM a signal indicating that it should be removed from the slowdown condition. This message will be preceded by IST1733I, which indicates that the device has been in a slowdown condition longer than the time period identified by the first subparameter of the SLOWVAL start option.

device is the name of the device.

System Action: VTAM resumes normal I/O.

Operator Response: None.

Programmer Response: Devices may enter and exit slowdown many times, based on the availability of buffers. This is a normal condition. The fact that IST1733I and this message are issued, however may indicate that either the first subparameter of the SLOWVAL start option is too low, or that the device is having problems obtaining sufficient buffers to allow it to exit slowdown in a timely manner.

IST1736I PU NAME

Explanation: VTAM issues this message as part of a group of messages in response to a DISPLAY TOPO command. See message IST1295I for a complete description of possible message groups.

IST1737I *puname*

Explanation: VTAM issues this message as part of a group of messages in response to a DISPLAY TOPO command. See message IST1295I for a complete description of possible message groups.

IST1738I ANR LABEL TP ER NUMBER

Explanation: VTAM issues this message as part of a group of messages in response to a DISPLAY ID =*nodename* where *nodename* is an RTP PU. See message IST1476I for a complete description of the message group.

System Action: Processing continues.

Operator Response: None.

Programmer Response: None.

IST1739I *anrlabel tp ernumber*

Explanation: VTAM issues this message as part of a group of messages in response to a DISPLAY ID =*nodename* where *nodename* is an RTP PU. See message IST1476I for a complete description of the message group.

System Action: Processing continues.

Operator Response: None.

Programmer Response: None.

IST1740I IBMTGPS IN *library* **IS EMPTY - PROCESSING CONTINUES**

Explanation: VTAM issues this message when the library member IBMTGPS was empty.

library is the data definition name (DDNAME) specified for the definition library.

System Action: VTAM initialization continues. However, the IBM-supplied classes of service may not be available for TGP selection.

Operator Response: If the TG's classes of service have been defined under a different member name and are activated by configuration list processing or by a VARY ACT command, then no action is necessary.

Programmer Response: Verify that IBMTGPS was intentionally left empty.

IST1741I DATA SPACE SDUMPX FAILED WITH RETURN CODE *code* **REASON** *reason*

Explanation: VTAM attempted an SDUMPX for the VIT data space during a FFST mini dump. The system could not complete the dump successfully.

code indicates the return code received from MVS SDUMPX and may be one of the following.

4 The system obtained only a partial dump. The dump data set or file may be too small. *reason* will be X'00'.

8 The system was unable to schedule a dump.

reason is a hexadecimal code indicating the cause of the SDUMPX failure.

System Action: VTAM takes no further action to obtain a dump. Other processing continues.

Operator Response: Save the system log for problem determination.

Programmer Response: If *code* is **4**, look for system message IEA911I, which contains reason codes that explain why the system could not execute the dump. Message IEA911I is documented in the *z/OS MVS System Messages, Vol 6 (GOS-IEA)*.

If *code* is **8**, refer to the specific reason code to determine the required action. Refer to the *z/OS MVS Programming: Authorized Assembler Services Reference LLA-SDU* for more information about SDUMPX Return and Reason Codes.

IST1743I IBMTGPS IN *library* **NOT FOUND - PROCESSING CONTINUES**

Explanation: VTAM issues this message when the library member IBMTGPS was not found.

library is the data definition name (DDNAME) specified for the definition library.

System Action: VTAM initialization continues. However, the IBM-supplied classes of service may not be available for TGP selection.

Operator Response: If the TG's classes of service have been defined under a different member name and are activated by configuration list processing or by a VARY ACT command, then no action is necessary.

Programmer Response: Verify that IBMTGPS was intentionally not found.

IST1744I IBMTGPS IN *library* **IN ERROR - PROCESSING CONTINUES**

Explanation: VTAM issues this message when the library member IBMTGPS contained a syntax error.

library is the data definition name (DDNAME) specified for the definition library.

System Action: VTAM initialization continues. However, the IBM-supplied classes of service may not be available for TGP selection.

Operator Response: If the TG's classes of service have been defined under a different member name and are activated by configuration list processing or by a VARY ACT command, then no action is necessary.

Programmer Response: Refer to the *z/OS Communications Server: IP Configuration Guide* for more information.

IST1745I *rscname* **REJECTED BECAUSE VARYWLD =** *option*

Explanation: The *rscname* value for the ID keyword of a VARY command included a wildcard specification (* or ?). Wildcards are not permitted on this VARY command because the current value of the VARYWLD start option is *option*. Potential values for *option* are:

NOWILD
Wildcards are not permitted in any VARY commands.

OPERONLY
Wildcards are permitted in VARY commands from the network operator, but not from Program Operator Applications.

POAONLY
Wildcards are permitted in VARY commands from Program Operator Applications, but not from the network operator.

System Action: Processing continues.

Operator Response: Use the MODIFY VTAMOPTS command to change the VARYWLD value and reissue the VARY command.

Programmer Response: If wildcards should be permitted from either the network operator or Program Operator Applications, update the value of the VARYWLD start option in the VTAM start list (ATCSTRxx) to VARYWLD=FULLWILD.

IST1746I *command* **COMMAND PROCESSING COMPLETE**

Explanation: VTAM issues this message when the command processing to a Program Operator Application (POA) is complete. This message does not appear on the system operator console. See the *z/OS Communications Server: SNA Programming* for more information.

command is the command entered through the program operator interface. The valid *commands* are VARY, MODIFY and DISPLAY.

This is the last message issued in response to the *command*.

System Action: Processing continues.

Operator Response: None.

Programmer Response: None.

IST1747I **SUMMARY OF STATE INFORMATION:**

Explanation: VTAM issues this message as part of a message group in response to a DISPLAY LINES or DISPLAY CLSTRS command. This message is a header for message IST1748I.

System Action: Processing continues.

Operator Response: None.

Programmer Response: None.

IST1748I *state1* = *count1* **[** *state2* = *count2* **[** *state3* = *count3* **]]**

Explanation: VTAM issues this message as part of a message group in response to a DISPLAY CLSTRS or DISPLAY LINES command.

If there are more than 3 states, the message is repeated as many times as necessary to display all states.

state is a resource status code. See *z/OS Communications Server: IP and SNA Codes* for potential values.

count is the number of resources in the *state* displayed.

System Action: Processing continues.

Operator Response: None.

Programmer Response: None.

IST1749I *rscname* **REJECTED - VARYWLD = NO FOR APPL** *applname*

Explanation: The *rscname* value for the ID keyword of a VARY command issued by Program Operator Application *applname* included a wildcard specification (* or ?). Wildcards are not permitted on VARY commands from *applname* because the application's definition statement specifies VARYWLD=NO.

System Action: Processing continues.

Operator Response: No action is required unless wildcards are to be permitted in VARY commands from this application.

Programmer Response: If wildcards should be permitted, update the value of the VARYWLD keyword on the APPL definition statement for *applname* to VARYWLD=YES.

IST1750I **PCITHRSO =** *pcithrso* **PCITHRSH =** *pcithrsh*

Explanation: VTAM issues this message as part of a group of messages that displays tuning statistics for multipath channel (MPC) attached resources. The first message in the group is IST1230I. See that message for a complete description.

For detailed instructions about setting up an OSA-Express feature, refer to the *S/390: OSA-Express Customer's Guide and Reference*.

IST1751I **PCIUNPRO =** *pciunpro* **PCIUNPRD =** *pciunprd*

Explanation: VTAM issues this message as part of a group of messages that displays tuning statistics for multipath channel (MPC) attached resources. The first message in the group is IST1230I. See that message for a complete description.

For detailed instructions about setting up an OSA-Express feature, refer to the *S/390: OSA-Express Customer's Guide and Reference*.

IST1752I **RPROCDEO =** *rprocdeo* **RPROCDEF =** *rprocdef*

Explanation: VTAM issues this message as part of a group of messages that displays tuning statistics for multipath channel (MPC) attached resources. The first message in the group is IST1230I. See that message for a complete description.

For detailed instructions about setting up an OSA-Express feature, refer to the *S/390: OSA-Express Customer's Guide and Reference*.

IST1753I **RREPLDEO =** *rrepldeo* **RREPLDEF =** *rrepldef*

Explanation: VTAM issues this message as part of a group of messages that displays tuning statistics for multipath channel (MPC) attached resources. The first message in the group is IST1230I. See that message for a complete description.

For detailed instructions about setting up an OSA-Express feature, refer to the *S/390: OSA-Express Customer's Guide and Reference*.

IST1754I **NOREADSO =** *noreadso* **NOREADS =** *noreads*

Explanation: VTAM issues this message as part of a group of messages that displays tuning statistics for multipath channel (MPC) attached resources. The first message in the group is IST1230I. See that message for a complete description.

For detailed instructions about setting up an OSA-Express feature, refer to the *S/390: OSA-Express Customer's Guide and Reference*.

IST1755I SBALMAX = *sbalmax* **SBALAVG =** *sbalavg*

Explanation: VTAM issues this message as part of a group of messages that displays tuning statistics for multipath channel (MPC) attached resources. The first message in the group is IST1230I. See that message for a complete description.

For detailed instructions about setting up an OSA-Express feature, refer to the *S/390: OSA-Express Customer's Guide and Reference*.

IST1756I QDPTHMAX = *qdpthmax* **QDPTHAVG =** *qdpthavg*

Explanation: VTAM issues this message as part of a group of messages that displays tuning statistics for multipath channel (MPC) attached resources. The first message in the group is IST1230I. See that message for a complete description.

For detailed instructions about setting up an OSA-Express feature, refer to the *S/390: OSA-Express Customer's Guide and Reference*.

IST1757I PRIORITY*x***:** *congstate* **PRIORITY***x***:** *congstate*

Explanation: This message is part of several message groups that VTAM issues in response to DISPLAY ID or DISPLAY TRL commands. This message will appear for a TRLE representing an OSA-Express Adapter.

x specifies the write priority level.

congstate specifies the congestion state of that priority level. *congstate* will be **CONGESTED** when, at least once within the last congestion reporting window, all 128 writes for the priority level were unavailable. Otherwise *congstate* will be **UNCONGESTED**.

System Action: Processing continues.

Operator Response: None.

Programmer Response: None.

IST1758I RSCV TOWARDS DLUR SAVED AT SESSION ACTIVATION

Explanation: This message is part of a group of messages that VTAM issues in response to a DISPLAY SESSIONS,SID=sid,PATHINFO=YES command when the session has RSCV information reported by the DLUR node which acts as the CP(SLU). See the explanation of message IST879I for a complete description of the group.

IST1759I RTP RSCV FROM THE DIRECTION OF THE DLUR

Explanation: This message is part of a group of messages that VTAM issues in response to a DISPLAY SESSIONS,SID=sid,PATHINFO=YES command for an HPR session when the SLU endpoint of the session is at a DLUR node. The PLU endpoint of the session might be this z/OS CS node. The RSCV displayed is the path of the RTP pipe from the perspective of the DLUR node. See the explanation of message IST879I for a complete description of the group.

IST1760I *trlename* **SUBCHANNEL** *cua* **VARY OFFLINE NOT ALLOWED**

Explanation: VTAM received an MVS VARY OFFLINE command for the subchannel *cua* in the MPC group defined in *trlename*. The command is not allowed because the subchannel *cua* is the last active Read or Write device within this MPC group.

trlename is the name of the TRLE that contains the subchannel.

cua is the subchannel address.

System Action: The VARY OFFLINE is ignored by VTAM and the CUA remains in a (system) pending offline state. Processing continues.

Operator Response: If the intention is to inactivate the entire MPC group, issue a VARY OFFLINE FORCE

command for the CUA, or inactivate the users of the MPC group as follows:

1. Issue VARY INACT command to the related SNA PU.
2. Issue STOP DEVICE command to the related TCP/IP devices.
3. When the MPC group is used by both SNA and TCP/IP issue both VARY INACT and STOP DEVICE.
4. When the MPC group is used by multiple TCP/IP stacks, a STOP DEVICE command must be issued for each TCP/IP stack using the group.
5. When the MPC group is QDIO (OSA-Express) and all devices are stopped, the MPC group will not inactivate until a specified time period (approximately 2 minutes) is exceeded. VARY OFFLINE FORCE will inactivate the MPC (QDIO) group immediately.

Programmer Response: See the *z/OS Communications Server: IP Configuration Guide* for an explanation of how the keyword LASTRW on the TRLE definition statement affects the VTAM processing related to VARY OFFLINE (when associated with the last active read or write device within an MPC group). Careful consideration should be given when deciding how this keyword should be defined for your operating environment.

IST1761I *parameter* **PARAMETER EXTRANEOUS FOR DISPLAY ID COMMAND**

Explanation: VTAM issues this message when an extraneous parameter is specified for a DISPLAY ID command.

parameter is the parameter that is not valid for a DISPLAY ID command.

Notes:

1. This message might be issued as the result of the intended verb of the command being specified incorrectly. For example, a DISPLAY NCPSTOR command issued with NCPSTOR misspelled:

   ```
   DISPLAY NET,NCPSTORE,ID=name,ADDR=address
   ```

   will result in this message issued with the text:

   ```
   IST1761I ADDR PARAMETER EXTRANEOUS FOR DISPLAY ID COMMAND
   ```
2. The parameter might be valid for other combinations of parameters and resource types.
3. Parameters on the operator commands are not processed in the order they are provided in the command.
4. All positional parameters in a command that occur before the first positional keyword parameter will be labeled **Px**, starting with **P1**.

System Action: VTAM rejects the command.

Operator Response: Reenter the command correctly. See the *z/OS Communications Server: SNA Operation* for the correct syntax.

Programmer Response: None.

IST1762I *line* **ACT FAILED, TCPNAME OR IPADDR START OPTION REQUIRED**

Explanation: This message is displayed when an Enterprise Extender (HPR/IP) line activation fails because no value was specified in the TCPNAME and IPADDR start options. Without one of these values coded, VTAM cannot determine which TCP/IP stack will be used for Enterprise Extender (HPR/IP) data traffic.

line is the name of the Enterprise Extender (HPR/IP) line that failed.

System Action: Enterprise Extender (HPR/IP) line activation failed.

Operator Response: Code either TCPNAME or IPADDR as a VTAM start option. Temporarily, you can issue a MODIFY VTAMOPTS command and specify the value of one of these start options.

Programmer Response: None.

IST1763I NO ACTIVE CP-CP SESSION-CAPABLE TGS EXIST

Explanation: VTAM issues this message in response to a DISPLAY CPCP command when there is no active CP-CP session-capable TG connection to any node.

System Action: The DISPLAY command fails. Processing continues.

Operator Response: None.

Programmer Response: None.

IST1764I NO ACTIVE CP-CP SESSION-CAPABLE TG TO *cpname*

Explanation: VTAM issues this message in response to a DISPLAY CPCP command when there is no active CP-CP session capable TG connection to the adjacent node that you specified.

cpname is the network-qualified name of the adjacent node.

System Action: The DISPLAY command fails. Processing continues.

Operator Response: Verify that the CP name specified in the ID operand is valid. If the CP name entered belongs to a node in the network, there is currently no active CP-CP session-capable connection to this node.

Programmer Response: None.

IST1765I ADJACENT CP WINNER LOSER STATE NODE ANDCB

Explanation: VTAM issues this message as part of a group of messages in response to a DISPLAY CPCP command or when a CP-CP session cannot be activated. When a CP-CP session cannot be activated, the first message in the group is IST1110I. See the explanation of that message for a complete description of the message group.

When this message is issued in response to a DISPLAY CPCP command, this message is the first message in the group. A complete description of the message group follows:

```
 IST350I   DISPLAY TYPE = CP-CP SESSION STATUS
 IST1765I  ADJACENT CP        WINNER   LOSER   STATE       NODE ANDCB
 IST1766I  adjacent_cp        cw_state cl_state state      node address
⋮
[IST1315I DISPLAY TRUNCATED AT MAX = number]
 IST1454I  count ADJCP(S) DISPLAYED
 IST314I   END
```

IST350I

This message identifies the type of information in the display and is always CP-CP SESSION STATUS for this message group.

Note: CP-CP sessions refer to the contention winner and contention loser sessions of the CP-CP session pair.

IST1765I

This message is a header message for the information displayed in IST1766I.

IST1766I

One IST1766I will be issued for each adjacent node displayed.

adjacent_cp is the network-qualified CP name of the adjacent control point.

cw_state is the status of the contention winner CP-CP session. Valid values are:

ACT Active

INACT Inactive

PACT Pending active

PINACT Pending inactive

cl_state is the status of the contention loser CP-CP session. Valid values are:

ACT Active

INACT Inactive

PACT Pending active

PINACT Pending inactive

state is the state of the CP-CP sessions to the adjacent node being displayed. Valid values are:

UP One or more of the contention winner and contention loser sessions are active or pending-active.

DOWN Both contention winner and contention loser sessions are coming down but are not completely inactive.

BOTH DOWN Both contention winner and contention loser sessions are inactive.

node is the APPN node type of the adjacent control point. Valid values are:

EN End node

NN Network node

address is the hexadecimal storage address for the adjacent node control block where the CP-CP session information is saved.

IST1454I

count is the total number of adjacent CPs that support CP-CP sessions.

IST1315I

VTAM issues this message when the number of CP-CP session status to be displayed exceeds the value specified on the MAX operand.

number is the value specified for the MAX operand.

System Action: Processing continues.

Operator Response: None.

Programmer Response: None.

IST1766I *adjacent_cp cw_state cl_state state node address*

Explanation: This message is part of a group of messages that VTAM issues in response to a DISPLAY CPCP command or when a CP-CP session cannot be activated. When a CP-CP session cannot be activated, the first message in the group is IST1110I. See the explanation of that message for a complete description of the message group. When this message is issued in response to a DISPLAY CPCP command, see message IST1765I for a complete description of the message group.

IST1767I TRACE INITIATED FOR *number* **DYNAMIC APPLICATIONS**

Explanation: VTAM issues this message in response to a MODIFY TRACE command with all of the following:

- The ID operand specified as a model application name
- The SCOPE operand specified as ALL
- The TYPE operand specified as IO or BUF

MODIFY TRACE is used to initiate the IO or buffer trace on the model application and all the existing dynamic applications associated with the model. If there is at least one dynamic application associated with the model, this message will be issued to display the number of dynamic applications affected by the command.

number is the number of dynamic applications whose IO trace or buffer trace is initiated by a modify trace command.

System Action: Processing Continues.

Operator Response: None.

Programmer Response: None.

IST1768I TRACE TERMINATED FOR *number* **DYNAMIC APPLICATIONS**

Explanation: VTAM issues this message in response to a MODIFY NOTRACE command with all of the following:

- The ID operand specified as a model application name
- The SCOPE operand specified as ALL
- The TYPE operand specified as IO or BUF

MODIFY NOTRACE is used to terminate the IO or buffer trace on the model application and all the existing dynamic applications associated with the model. If there is at least one dynamic application associated with the model, this message will be issued to display the number of dynamic applications affected by the command.

number is the number of dynamic applications whose IO trace or buffer trace is terminated by a modify trace command.

System Action: Processing Continues.

Operator Response: None.

Programmer Response: None.

IST1769I LAST TDU RECEIVED - *date time* **FROM** *adjacent_cp*

Explanation: VTAM issues this message as part of a group of messages in response to a DISPLAY TOPO command. See message IST1295I for a complete description of the message groups.

IST1770I TDU COUNTS RESET - *date time*

Explanation: VTAM issues this message as part of a group of messages in response to a DISPLAY TOPO, LIST=TDUINFO command. See message IST1776I or IST1780I for a complete description of the message groups.

IST1771I SENT - *sent* **RECEIVED -** *received* **ACCEPTED -** *accepted*

Explanation: VTAM issues this message as part of a group of messages in response to a DISPLAY TOPO command. See message IST1295I for a complete description of the message groups.

IST1772I REJECTED - *rejected* **IGNORED -** *ignored*

Explanation: VTAM issues this message as part of a group of messages in response to a DISPLAY TOPO command. See message IST1295I for a complete description of the message groups.

IST1773I TNSTAT RECORDS CANNOT BE SENT TO SMF - SMF NOT IN SYSTEM

Explanation: This message is issued when SMF is unavailable at one of the following times:

- During VTAM initialization time and the TNSTAT start option was specified.
- A DISPLAY or MODIFY TNSTAT command has been accepted.
- When tuning statistics summary records have been built.

System Action: Processing continues.

Operator Response: If you intended to have SMF collect the TNSTAT summary records, then initiate SMF.

Programmer Response: None.

IST1774I OPTIMAL CNN ROUTE NOT CHOSEN - ENTRY/EXIT SUBAREA MISMATCH

Explanation: This message is the first in a group of messages that VTAM issues when an optimal CNN route exists and is not chosen during session activation. A description of the message group follows:

```
IST1774I OPTIMAL CNN ROUTE NOT CHOSEN - ENTRY/EXIT SUBAREA MISMATCH
IST1775I CNN ENTRY SUBAREA = entry_subarea   CNN EXIT SUBAREA = exit_subarea
IST664I REAL  OLU=luname1       REAL  DLU=luname2
IST889I SID = session_id
IST314I END
```

IST664I

The origin LU may be either the PLU or SLU. The same applies for the destination LU. If the origin or destination LU name is unknown, VTAM displays ***NA***.

IST889I

sessid is a unique identifier for the session. If the session ID is unknown, VTAM displays ***NA***.

IST1774I

A CNN Route is not optimal if the following conditions are both true:

– The chosen CNN entry and exit TG subareas do not match.

– Another active TG to the network node is found that has the same characteristics as the chosen entry TG and the same subarea as the CNN exit TG.

The reason a nonoptimal route might be chosen is one of the following:

– The topology of the CNN is not known by the APPN topology and route selection process.

– The route was calculated by a non-VTAM node that does not support the use of subarea numbers in route calculation.

The following figure is an example of a configuration:

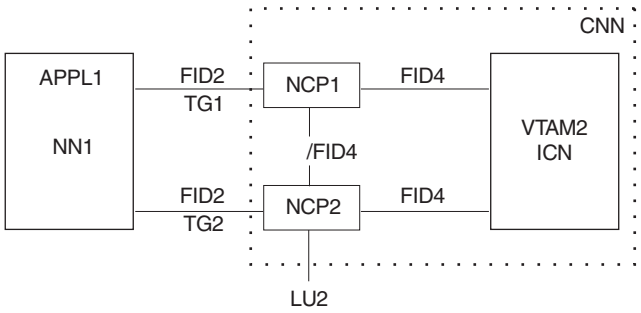

Figure 4. Sample configuration

In this figure, the CNN is composed of VTAM2, NCP1, and NCP2. The subarea of NCP1 is the CNN entry TG subarea and the subarea of NCP2 is the CNN exit TG subarea. A session is started between APPL1 (PLU) and LU2 (SLU). If the adjacent network node (NN1) chooses to use TG1 instead of TG2, then the IST1774I message group will appear on VTAM2.

Note: The APPN node that picked the CNN entry TG (NN1 in the above configuration) is the NNS of the PLU, which may or may not be a VTAM. In addition, the NNS of the PLU may or may not be directly adjacent to the CNN.

IST1775I

This message follows IST1774I and indicates the CNN entry subarea and the CNN exit subarea.

entry_subarea is the decimal subarea of the node within the CNN where the BIND entered the CNN from the PLU.

exit_subarea is the decimal subarea of the node within the CNN where the BIND exited the CNN to the SLU.

System Action: Processing continues.

Operator Response: Save the system log for problem determination.

Programmer Response: If the APPN node calculating the session route (choosing the CNN entry subarea) was not VTAM, then change the APPN TG characteristics. If the APPN node calculating the session route (choosing the CNN entry subarea) was pre-V2R7 VTAM and the session partner is an LU on the CNN exit subarea (NCP), then change the APPN TG characteristics. See the *z/OS Communications Server: SNA Network Implementation Guide* for more information about APPN TG characteristics. If the APPN node calculating the session route is, at a minimum, V2R7 VTAM, then request a dump of the VTAM calculating the session route for problem determination. CNNRTMSG=SUPPRESS may be specified as the start option value or modified with the MODIFY VTAMOPTS command to suppress message group IST1774I.

IST1775I CNN ENTRY SUBAREA = *entry_subarea* **CNN EXIT SUBAREA =** *exit_subarea*

Explanation: VTAM issues this message as part of a message group to indicate that an optimal route through a CNN was not chosen during session establishment. See message IST1774I for a complete description of the message group.

IST1776I TDUS RECEIVED MOST RECENTLY

Explanation: VTAM issues this message as part of a group of messages in response to a DISPLAY TOPO,LIST=TDUINFO,SCOPE=RECENT command. A complete description of the message group follows:

```
IST350I   DISPLAY TYPE = TOPOLOGY
IST1776I TDUS RECEIVED MOST RECENTLY
IST1777I  CP NAME           RSN       DESTINATION CP    TGN  ACC   REJ
IST1778I  cp_name           rsn       destination_cp    tgn  accepted rejected
:
IST1454I  num TDUINFO(S) DISPLAYED
IST1779I  TDUS RECEIVED BETWEEN first_tdu_date first_tdu_time - last_tdu_date last_tdu_time
IST1770I TDU COUNTS RESET - date time
IST314I   END
```

IST350I

This message identifies the type of information in the display and is always TOPOLOGY for this message group.

IST1454I

This message is issued to display the number of TDU information entries displayed in this message group.

num is the total number of IST1778I message displayed in the message group.

IST1770I

This message contains the date and time when all the TDU counts were reset.

date is the date when all the TDU counts were reset. The format of *date* is based on the DATEFORM start option and is one of the following:

DATEFORM|DATEFRM=DMY
DD/MM/YY

DATEFORM|DATEFRM=MDY (default)
MM/DD/YY

DATEFORM|DATEFRM=YMD
YY/MM/DD

time is the time (hh:mm:ss) when all TDU counts were reset. They are expressed in the 24-hour system. For example, 1:00 p.m. is displayed as 13:00:00

IST1776I

This message is issued to indicate that each IST1778I in this message group represents one of the inbound TDUs received most recently.

IST1777I

This message is a header message for the information displayed in IST1778I.

ACC is the abbreviation for ACCEPTED.

REJ is the abbreviation for REJECTED.

IST1778I

One IST1778I will be issued for each TDU information entry displayed.

This message displays information about the most recently received TDUs. The IST1778I messages in this message group are in the order of the most recently received TDUs to the least recently received TDUs.

If the number of TDUs received since the last TDU count reset is smaller than the number of recent TDUs requested on the display command, the number of IST1778I messages displayed in this group can be smaller than the value specified in the NUM keyword.

cp_name is the network-qualified CP name of the node if the resource displayed is a node. If the resource displayed is a TG, this is the network-qualified CP name of the TG origin node.

rsn is the resource sequence number (RSN) expressed in decimal. It is obtained from the TDU received.

destination_cp is the network-qualified CP name of the TG's destination node if the resource displayed is a TG. *****NA***** is displayed if the resource is a node.

tgn is the transmission group number associated with the TG displayed. NA is displayed if the resource is a node.

accepted is the number of inbound TDUs containing new information that cause the resource record to be updated.

rejected is the number of inbound TDUs containing backlevel information that cause outbound TDUs to be sent as corrections.

IST1779I

This message displays the time stamps for the first TDU and the last TDU displayed in this group.

first_tdu_date is the date when the least recent TDU displayed was received.

last_tdu_date is the date when the most recent TDU displayed was received, and information about this TDU is displayed in the first IST1778I in the message group.

The format of *date* is based on the DATEFORM start option and is one of the following:

DATEFORM|DATEFRM=DMY
DD/MM/YY

DATEFORM|DATEFRM=MDY (default)
MM/DD/YY

DATEFORM|DATEFRM=YMD
YY/MM/DD

first_tdu_time is the time (hh:mm:ss) when the least recent TDU displayed was received.

last_tdu_time is the time (hh:mm:ss) when the most recent TDU displayed was received.

They are expressed in the 24-hour system. For example, 1:00 p.m. is displayed as 13:00:00. *last_tdu_time* is the time when the most recent TDU was received, and information about this TDU is displayed in the first IST1778I in the message group.

System Action: Processing continues.

Operator Response: None.

Programmer Response: None.

IST1777I CP NAME RSN DESTINATION CP TGN ACC REJ

Explanation: VTAM issues this message as part of a group of messages in response to a DISPLAY TOPO, LIST=TDUINFO command. See message IST1776I or IST1780I for a complete description of the message groups.

System Action: Processing continues.

Operator Response: None.

Programmer Response: None.

IST1778I *cp_name rsn destination_cp tgn accepted rejected*

Explanation: VTAM issues this message as part of a group of messages in response to a DISPLAY TOPO, LIST=TDUINFO command. See message IST1776I or IST1780I for a complete description of the message groups.

System Action: Processing continues.

Operator Response: None.

Programmer Response: None.

IST1779I TDUS RECEIVED BETWEEN *first_tdu_date first_tdu_time* **-** *last_tdu_date last_tdu_time*

Explanation: VTAM issues this message as part of a group of messages in response to a DISPLAY TOPO,LIST=TDUINFO,SCOPE=RECENT command. See message IST1776I for a complete description of the message groups.

IST1780I TOPOLOGY RESOURCE RECORDS REFERENCED MOST FREQUENTLY

Explanation: VTAM issues this message as part of a group of messages in response to a DISPLAY TOPO,LIST=TDUINFO,SCOPE=ACTIVITY command. A complete description of the message group follows:

```
IST350I   DISPLAY TYPE = TOPOLOGY
IST1780I TOPOLOGY RESOURCE RECORDS REFERENCED MOST FREQUENTLY
IST1777I  CP NAME           RSN       DESTINATION CP    TGN  ACC   REJ
IST1778I  cp_name           rsn       destination_cp    tgn  accepted rejected
:
IST1454I  num TDUINFO(S) DISPLAYED
IST1770I TDU COUNTS RESET - date time
IST314I   END
```

IST350I

This message identifies the type of information in the display and is always TOPOLOGY for this message group.

IST1454I

This message is issued to display the number of TDU information entries displayed in this message group.

num is the total number of IST1778I messages displayed in this message group.

IST1770I

This message contains the date and time when all the TDU counts were RESET.

date is the date that the TDU counts were reset. The format of *date* is based on the DATEFORM start option and is one of the following:

DATEFORM|DATEFRM=DMY
DD/MM/YY

DATEFORM|DATEFRM=MDY (default)
MM/DD/YY

DATEFORM|DATEFRM=YMD
YY/MM/DD

time is the time (hh:mm:ss) when all TDU counts were reset. They are expressed in the 24-hour system. For example, 1:00 p.m. is displayed as 13:00:00

IST1777I

This message is a header message for the information displayed in IST1778I.

ACC is the abbreviation for ACCEPTED.

REJ is the abbreviation for REJECTED.

IST1778I

One IST1778I will be issued for each TDU information entry displayed. This message displays information about topology resource records that are referenced most frequently by inbound TDU processing. The first IST1778I in the message group describes the topology resource record that is referenced most frequently. If the number of topology resources reported in TDUs is smaller than the number of resources requested on the display command, the number of IST1778I messages displayed in this group can be smaller than the value specified in the NUM keyword.

cp_name is the network-qualified CP name of the node if the resource displayed is a node. If the resource displayed is a TG, this is the network-qualified CP name of the TG origin node.

rsn is the resource sequence number (RSN) expressed in decimal. It is obtained from the resource record from when it was last referenced by inbound TDU processing.

destination_cp is the network-qualified CP name of the TG destination node if the resource displayed is a TG. ***NA*** is displayed if the resource is a node.

tgn is the transmission group number associated with the TG displayed. NA is displayed if the resource is a node.

accepted is the number of inbound TDUs containing new information that cause the resource record to be updated.

rejected is the number of inbound TDUs containing backlevel information that cause outbound TDUs to be sent as corrections.

IST1780

This message is issued to indicate each IST1778I in this message group represents one of the topology resource records referenced for inbound TDU processing most frequently.

System Action: Processing continues.

Operator Response: None.

Programmer Response: None.

IST1781I INITDB CHECKPOINT DATASET LAST GARBAGE COLLECTION

Explanation: VTAM issues this message as part of a group messages in response to a DISPLAY TOPO, LIST=SUMMARY command. See message IST1306I for a complete description of the message group.

System Action: Processing continues.

Operator Response: None.

Programmer Response: None.

IST1782I ENTRY NAME TABLE NAME ACTIVATION TIME

Explanation: VTAM issues this message as part of a group of messages in response to a DISPLAY COS,TYPE=APPN command. A complete description of the message group follows:

```
IST350I   DISPLAY TYPE = APPN COS
IST1782I  ENTRY NAME     TABLE NAME     ACTIVATION TIME
IST1783I  cos_entry      cos_table      date       time
:
IST314I   END
```

IST350I

This message identifies the type of information in the display and is always APPN Class of Service for this message group.

IST1782I

This message is a header message for the information displayed in IST1783I.

IST1783I

One IST1783I will be issued for each APPN COS entry displayed.

cos_entry is the name of the APPN Class of Service entry.

cos_table is the name of the last APPNCOS table that was used to create or update the Class of Service entry.

date and *time* are displayed for ACTIVATION TIME. *date* is the date when the Class of Service entry was created or last updated. The format of date is based on the DATEFORM start option and can be one of the following:

DATEFORM|DATEFRM=DMY
DD/MM/YY

DATEFORM|DATEFRM=MDY (default)
MM/DD/YY

DATEFORM|DATEFRM=YMD
YY/MM/DD

time is the time (hh:mm:ss) when the Class of Service entry was created or last updated and is expressed in the 24-hour system. For example, 1:00 p.m. is displayed as 13:00:00.

System Action: Processing continues.

Operator Response: None.

Programmer Response: None.

IST1783I *cos_entry cos_table date time*

Explanation: This message is part of a group of messages that VTAM issues in response to a DISPLAY COS,TYPE=APPN command. The first message of the group is IST1782I. See the explanation of that message for a complete description of the group.

IST1784I LAST TDU RECEIVED - NONE

Explanation: VTAM issues this message as part of a group of messages in response to a DISPLAY TOPO command. See message IST1295I for a complete description of the message groups.

IST1785I *initdb_date initdb_time garbage_collect_date garbage_collect_time*

Explanation: VTAM issues this message as part of a group of messages in response to a DISPLAY,TOPO,LIST=SUMMARY command. See message IST1306I for a complete description of the group.

IST1786I HPR ROUTE TEST INITIATED FOR RTP PU

Explanation: VTAM issues this message as part of a subgroup of messages in response to a DISPLAY RTPS command. The first message of the subgroup is IST1695I. See the explanation of that message for a complete description of the subgroup.

IST1787I HPR ROUTE TEST RESULTS FOR RTP PU *puname*

Explanation: VTAM issues this message as the first of a message group to display the results of an HPR Route Test for puname. This HPR Route Test was initiated in response to a DISPLAY RTPS command with TEST=YES being issued for the RTP PU identified by puname. This message is the first in a group of messages and the full description of the message group follows:

```
 IST1787I HPR ROUTE TEST RESULTS FOR RTP PU puname
 IST1788I NODE CP NAME    TG NUMBER  PARTNER CP NAME  INTERNODAL TIME
 IST1789I                                             (MILLISECONDS)
 IST1790I node_cpname     tg_number  partner_cpname   internodal_time
[IST1791I HPR ROUTE TEST PACKET NOT RETURNED BY NODE cpname]
 IST1792I TOTAL RTP TRAVERSAL TIME traversal_time MILLISECONDS
 IST314I END
```

IST1787I

puname is the RTP PU for which the Route Test results are displayed.

IST1788I

This message serves as a header for message IST1788I to identify the output columns in that message.

IST1789I

This message shows that the internodal_time value is in milliseconds.

IST1790I

This message provides the data obtained by the Route Test. One of these messages will be issued for each link (Transmission Group) in the RTP pipe.

node_cpname is the CP name of the node owning the Transmission Group. tg_number is the Transmission Group number.

partner_cpname is the CP name of the partner node for this Transmission Group.

internodal_time is the time it took for a Route Test packet to traverse this Transmission Group, in milliseconds, or *****NA***** if this test packet did not return.

Note: The sum of the internodal times shown in the IST1790I messages might be as much as 1 ms less for each hop in the RTP than the total RTP traversal time shown in message IST1792I, because integer division might cause internodal times to be truncated during calculation.

IST1791I

This message will be issued for all nodes in the RTP pipe that did not return a Route Test packet.

cpname is the CP name of the node that did not return the Route Test packet.

IST1792I

This message tells how long it took a Route Test packet to be sent from this VTAM to the other end of the RTP pipe.

traversal_time is the total time in milliseconds it took for a Route Test packet to travel from VTAM to the other end of the RTP pipe.

System Action: Processing continues.

Operator Response: Examine the internodal and traversal times for each link (Transmission Group) to identify any links where the traversal time is slow. Route Test packets not returned would indicate a problem with one or more of the links between this host node and the node identified by IST1791I. Path Switching for this RTP should be automatically attempted by the system.

Programmer Response: None.

IST1788I NODE CP NAME TG NUMBER PARTNER CP NAME INTERNODAL TIME

Explanation: This message is part of a group of messages that VTAM issues in response to an HPR Route Test. The first message of the group is IST1787I. See the explanation of that message for a complete description of the group.

IST1789I (MILLISECONDS)

Explanation: This message is part of a group of messages that VTAM issues in response to an HPR Route Test. The first message of the group is IST1787I. See the explanation of that message for a complete description of the group.

IST1790I *node_cpname tg_number partner_cpname internodal_time*

Explanation: This message is part of a group of messages that VTAM issues in response to an HPR Route Test. The first message of the group is IST1787I. See the explanation of that message for a complete description of the group.

IST1791I HPR ROUTE TEST PACKET NOT RETURNED BY NODE *cp_name*

Explanation: This message is part of a group of messages that VTAM issues in response to an HPR Route Test. The first message of the group is IST1787I. See the explanation of that message for a complete description of the group.

IST1792I TOTAL RTP TRAVERSAL TIME *traversal_time* **MILLISECONDS**

Explanation: This message is part of a group of messages that VTAM issues in response to an HPR Route Test. The first message of the group is IST1787I. See the explanation of that message for a complete description of the group.

IST1793I HPR ROUTE TEST NOT INITIATED - RTP PU NOT IN PROPER STATE

Explanation: VTAM issues this message as part of a subgroup of messages in response to a DISPLAY RTPS command. The first message of the subgroup is IST1695I. See the explanation of that message for a complete description of the subgroup.

IST1794I HPR ROUTE TEST NOT INITIATED - TEST ALREADY IN PROGRESS

Explanation: VTAM issues this message as part of a subgroup of messages in response to a DISPLAY RTPS command. The first message of the subgroup is IST1695I. See the explanation of that message for a complete description of the subgroup.

IST1795I HPR ROUTE TEST NOT INITIATED - INSUFFICIENT STORAGE

Explanation: VTAM issues this message as part of a subgroup of messages in response to a DISPLAY RTPS command. The first message of the subgroup is IST1695I. See the explanation of that message for a complete description of the subgroup.

IST1796I SYSTEM-MANAGED DUPLEXING REBUILD IS IN PROGRESS

Explanation: This message is part of a group of messages VTAM issues in response to a DISPLAY STATS,TYPE=CFS command. The first message in the group is IST1370I. See the explanation of that message for a complete description.

IST1797I STRUCTURE TYPE = *type*

Explanation: This message is part of a group of messages VTAM issues in response to a DISPLAY STATS,TYPE=CFS command. The first message in the group is IST1370I. See the explanation of that message for a complete description.

IST1798I TOPOLOGY DATASET RETRIEVED WAS CREATED ON *date time*

Explanation: VTAM issues this message when topology data from a previously saved topology checkpoint dataset has been read successfully at VTAM initialization.

date and *time* are the date and time when the dataset was created.

System Action: Processing continues.

Operator Response: None.

Programmer Response: None.

IST1799I NO ROUTE AVAILABLE TO DESTINATION IP ADDRESS *ipaddr*

Explanation: This message indicates that the TCP/IP stack could not find a route to the destination VIPA address specified.

ipaddr is the destination VIPA address.

System Action: The Enterprise Extender connection will fail to activate and the associated link will be inactivated because no route was available.

Operator Response: None.

Programmer Response: There is no route to this IP address. For an Enterprise Extender connection, the address must be a static VIPA and a route must be available between the two endpoints of the connection. Determine if this address has been specified correctly and that there is a route in both directions between the endpoints of the Enterprise Extender connection.

IST1800I TRLE = *trlename* **** CONGESTED ****

Explanation: This message is issued in response to the following display commands when the associated device is congested:

- D NET TRL
- D NET,TRL,TRLE=trlename
- D NET,ID=trlename

**** CONGESTED ***** indicates that the associated device *trlename* has an excessive amount of outbound I/O work that is queued at the Data Link Control (DLC) layer. This congestion might be related to system storage problems (such as storage shortages) for this system.

System Action: None.

Operator Response: When a device is marked congested, further action is required to determine if the congestion is related to a system storage problem. The following steps should be taken:

1. Review the system console for any messages related to current storage shortage conditions.
2. Issue the following display commands:
   - VTAM display commands:
     - D NET,CSM
     - D NET,BFRUSE
     - D NET,STORUSE,POOL=*
   - TCP/IP display command (if applicable):
     - D TCPIP,, STOR
3. Issue D NET,TRL,TRLE= trlename to obtain more details about the device congestion (reference message IST1802I).
4. Activate VTAM tuning statistics (TNSTAT) or RMF™ (or other monitoring tools) to monitor this specific device.
5. Display the active jobs in the system to determine if new work was recently started.

If the previous steps indicate a system storage shortage is present, it might be necessary to obtain documentation (such as a CONSOLE LOG and a DUMP) to diagnose the congestion related to this device. This condition might be relieved by stopping the device (TCP/IP) or inactivating the PU (SNA).

Programmer Response: The following steps might be required to isolate a system storage problem that is related to an I/O device:

1. Review the network configuration related to this device or any recent configuration changes for this system.
2. Review or monitor (using the output from VTAM TNSTAT or RMF) the network traffic related to this device. Compare the actual workload to the I/O capacity of the hardware device.
3. Determine if the congestion is related to a specific time of day, job, application, or type of work load.
4. Verify that Missing Interrupt Handler (MIH) is defined for the write devices.
5. Review or verify that the maintenance level for the hardware device is current.
6. Consider automating the necessary storage displays to monitor system conditions.

IST1801I UNITS OF WORK FOR NCB AT ADDRESS *stor_addr*

Explanation: This message is displayed as a result of display command D NET,TRL,TRLE= *trlename* or D NET,ID = *trlename*.

stor_addr is the storage address of the Node Control Block (NCB) that is related to this device. For a description of the counts of units of work, refer to message IST1802I.

System Action: None.

Operator Response: None.

Programmer Response: None.

IST1802I *pn* **CURRENT =** *cur* **AVERAGE =** *avg* **MAXIMUM =** *max*

Explanation: This message is issued as a result of display command D NET,TRL,TRLE=trlename,or D NET,ID=trlename. This message provides the detailed counts of units of work for a specific device or MPC group measured at the Data Link Control (DLC) layer.

pn is the Priority Queue Number (such as P1) for this device. *pn* is only displayed when applicable to a DLC.

Each of the following counts CURRENT, AVERAGE, and MAXIMUM is a 4-digit (nnnn) decimal number with a range of 1–9999. When the count exceeds 9999, the number will be expressed as nnnK (thousands - such as 12K). The highest value that can be displayed is 999K.

cur is the current total number of outbound work units that are being processed by the DLC layer for this device or MPC group.

avg is the average number of outbound work units that have been processed by the DLC layer for this device since activation. Average means how many outbound work units are present at the DLC layer for this device each time the DLC processes outbound work.

max is the maximum number of outbound work elements that accumulated within the DLC layer for this device since activation.

System Action: None.

Operator Response: None. However, if the CURRENT COUNT is excessive, the device might be marked ** CONGESTED **. Refer to message IST1800I for an explanation of ** CONGESTED **.

Programmer Response: None.

IST1803I *parameter* **PARAMETER VALUE NOT VALID - DEFAULT** *default* **USED**

Explanation: VTAM issues this message as part of a group of messages in response to a DISPLAY TOPO command. See message IST1295I for a complete description of the message group.

IST1804I *parameter* **PARAMETER NOT VALID - IGNORED**

Explanation: VTAM can issue this message as part of a group of messages or as a stand-alone message.

When VTAM issues this message as part of a group of messages in response to a DISPLAY TOPO command, see message IST1295I for a complete description of the message group.

VTAM issues this message alone in response to a MODIFY RESOURCE,ID=cdrsc_name,ADJLIST=list,ACTION=UPDATE when the command is entered in a pure APPN node. A pure APPN node is a VTAM that is started with start options NODETYPE=NN or NODETYPE=EN, but without HOSTSA or with HOSTSA and SACONNS=NO.

parameter is the parameter that is not valid on the command. For the MODIFY RESOURCE command in a pure APPN node, *parameter* will always be ADJLIST.

System Action: Processing continues. If this message is issued in response to a MODIFY RESOURCE command, the specified ADJLIST is not associated with the CDRSC.

Operator Response: None.

Programmer Response: None.

IST1805I ONLY LOCAL TOPOLOGY INFORMATION IS AVAILABLE

Explanation: VTAM issues this message when a DISPLAY TOPO command is issued at an end node and one of the following is true:

- The requested information is not available at the end node. In this case, this message will be displayed before IST1308I.
- The information displayed might be a subset of the information displayed when the same command is issued at a network node. In this case, this message is part of a group of messages in response to a DISPLAY TOPO command. See message IST1295I for a complete description of the message group.

System Action: Processing continues.

Operator Response: None.

Programmer Response: None.

IST1806I NO DIAL-IN LINE FOUND FOR HPR/IP SWITCHED CONNECTION

Explanation: This message is issued when there are no HPR/IP (Enterprise Extender) lines available to accept a dial-in predefined Enterprise Extender (EE) network connection. The lines are defined in the HPR/IP (Enterprise Extender) XCA major node.

System Action: Processing continues and the EE connection was not established. The other side of the EE connection (where the dial-out was initiated) will eventually discover the connection was not established, and an INOP will be generated (due to a timeout while waiting for a response to EE connection initiation).

Operator Response: Save the system log and contact the system programmer for problem determination.

Programmer Response: Add lines to one of the GROUPs used to define HPR/IP (Enterprise Extender) predefined connections in the XCA major node. See the *z/OS Communications Server: SNA Resource Definition Reference* for

information about defining EE connections and see the *z/OS Communications Server: SNA Network Implementation Guide* for general information about Enterprise Extender.

IST1807I NO DIAL-IN LINE FOR HPR/IP VIRTUAL NODE *nodename*

Explanation: This message is issued when there are no HPR/IP (Enterprise Extender) lines available to accept a dial-in for an Enterprise Extender (EE) Connection Network. The lines are defined in the HPR/IP (Enterprise Extender) XCA major node.

nodename is the name of the HPR/IP (Enterprise Extender) virtual node for a connection network.

System Action: Processing continues and the EE connection was not established. The other side of the EE connection (where the dial-out was initiated) will eventually discover that the connection was not established and an INOP will be generated (due to a timeout while waiting for a response to EE connection initiation.)

Operator Response: Save the system log and contact the system programmer for problem determination.

Programmer Response: Add lines to the GROUP used to define the HPR/IP (Enterprise Extender) Connection Network in the XCA major node. See the *z/OS Communications Server: SNA Resource Definition Reference* for information about defining EE connections and see the *z/OS Communications Server: SNA Network Implementation Guide* for general information about Enterprise Extender.

IST1809I HPR ROUTE TEST NOT INITIATED - INSUFFICIENT PATH INFORMATION

Explanation: VTAM issues this message as part of a subgroup of messages in response to a DISPLAY RTPS command. The first message of the subgroup is IST1695I. See the explanation of that message for a complete description of the subgroup.

IST1810I PKTIQDO = *pktiqdo* **PKTIQD =** *pktiqd*

Explanation: VTAM issues this message as part of a group of messages that displays tuning statistics for multipath channel (MPC) attached resources. The first message in the group is IST1230I. See that message for a complete description.

IST1811I BYTIQDO = *bytiqdo* **BYTIQD =** *bytiqdo*

Explanation: VTAM issues this message as part of a group of messages that displays tuning statistics for multipath channel (MPC) attached resources. The first message in the group is IST1230I. See that message for a complete description.

IST1812I PKTIQEO = *pktiqeo* **PKTIQE =** *pktiqe*

Explanation: VTAM issues this message as part of a group of messages that displays tuning statistics for multipath channel (MPC) attached resources. The first message in the group is IST1230I. See that message for a complete description.

IST1813I BYTIQEO = *bytiqeo* **BYTIQE =** *bytiqe*

Explanation: VTAM issues this message as part of a group of messages that displays tuning statistics for multipath channel (MPC) attached resources. The first message in the group is IST1230I. See that message for a complete description.

IST1814I IQDIO ROUTING ENABLED

Explanation: This message is part of several message groups that VTAM issues in response to a DISPLAY ID or DISPLAY TRL commands. The message will appear if the TRLE being displayed represents an IBM OSA-Express Adapter, and if the Upper Layer Protocol (ULP) using a given Datapath channel address has iQDIO routing in effect. See message IST1221I for a complete description.

System Action: Processing continues.

Operator Response: None.

Programmer Response: None.

IST1815I IQDIO ROUTING DISABLED

Explanation: This message is part of several message groups that VTAM issues in response to a DISPLAY ID or DISPLAY TRL commands. The message will appear if the TRLE being displayed represents an IBM OSA-Express Adapter, and if the Upper Layer Protocol (ULP) using a given Datapath channel address does not have iQDIO routing in effect. See message IST1221I for a complete description.

System Action: Processing continues.

Operator Response: None.

Programmer Response: None.

IST1816I PARAMETER 1 FOR DISCNTIM MUST BE NUMERIC OR IMMED

Explanation: VTAM issues this message during START processing or in response to a MODIFY VTAMOPTS command when the first parameter specified for the DISCNTIM start option is not correct. The first parameter for the DISCNTIM start option must be numeric, or the character value IMMED.

System Action: VTAM ignores the option. If the error occurred during START processing, VTAM will issue message IST1311A to prompt you to enter the start option value of DISCNTIM again. See IST1311A for more information. If the error occurred in response to a MODIFY VTAMOPTS command, processing continues.

Operator Response: If the error occurred during START processing, enter a valid value for parameter one of DISCNTIM option in response to IST1311A. You can also enter a blank if you want to accept the default value for DISCNTIM. If the error occurred in response to a MODIFY VTAMOPTS command, issue the command again, specifying a valid value for parameter one of DISCNTIM.

Programmer Response: If the error occurred during START processing, correct the value for DISCNTIM, if DISCNTIM is coded in an ATCSTRxx file. If the error occurred in response to a MODIFY VTAMOPTS command, no further action is required.

IST1817I PATH SWITCH REASON: RTP CONNECTION UNAVAILABLE

Explanation: This message is part of a group of messages that VTAM issues in response to an RTP path switch. The first message in the group is IST1494I. See the description of that message for more information.

IST1818I PATH SWITCH REASON: SHORT REQUEST RETRY LIMIT EXHAUSTED

Explanation: This message is part of a group of messages that VTAM issues in response to an RTP path switch. The first message in the group is IST1494I. See the description of that message for more information.

IST1819I PATH SWITCH REASON: TG INOP

Explanation: This message is part of a group of messages that VTAM issues in response to an RTP path switch. The first message in the group is IST1494I. See the description of that message for more information.

IST1820I PATH SWITCH REASON: MODIFY RTP COMMAND ISSUED

Explanation: This message is part of a group of messages that VTAM issues in response to an RTP path switch. The first message in the group is IST1494I. See the description of that message for more information.

IST1821I PATH SWITCH REASON: AUTO PATH SWITCH FOR PSRETRY

Explanation: This message is part of a group of messages that VTAM issues in response to an RTP path switch. The first message in the group is IST1494I. See the description of that message for more information.

IST1822I PATH SWITCH REASON: UNKNOWN

Explanation: This message is part of a group of messages that VTAM issues in response to an RTP path switch. The first message in the group is IST1494I. See the description of that message for more information.

IST1823I LIST DVIPA SYSNAME TCPNAME # ASSIGNED PORTS

Explanation: This message is part of a group of messages VTAM issues in response to a DISPLAY STATS,TYPE=CFS command. The first message in the group is IST1370I. See the explanation of that message for a complete description.

IST1824I *list dvipa numports*

Explanation: This message is part of a group of messages VTAM issues in response to a DISPLAY STATS,TYPE=CFS command. The first message in the group is IST1370I. See the explanation of that message for a complete description.

IST1825I *sysname tcpname numports*

Explanation: This message is part of a group of messages VTAM issues in response to a DISPLAY STATS,TYPE=CFS command. The first message in the group is IST1370I. See the explanation of that message for a complete description.

IST1826I PORTS: *port1 port2 port3 port4 port5 port6*

Explanation: This message is part of a group of messages VTAM issues in response to a DISPLAY STATS,TYPE=CFS command. The first message in the group is IST1370I. See the explanation of that message for a complete description.

IST1827I *port1 port2 port3 port4 port5 port6*

Explanation: This message is part of a group of messages VTAM issues in response to a DISPLAY STATS,TYPE=CFS command. The first message in the group is IST1370I. See the explanation of that message for a complete description.

IST1828I LIST *listnum* **IS UNCLAIMED**

Explanation: This message is part of a group of messages VTAM issues in response to a DISPLAY STATS,TYPE=CFS command. The first message in the group is IST1370I. See the explanation of that message for a complete description.

IST1829I NO CLAIMED LISTS FOUND FOR THE SPECIFIED DVIPA

Explanation: This message is part of a group of messages VTAM issues in response to a DISPLAY STATS,TYPE=CFS command. The first message in the group is IST1370I. See the explanation of that message for a complete description.

IST1830I NO CLAIMED LISTS FOUND

Explanation: This message is part of a group of messages VTAM issues in response to a DISPLAY STATS,TYPE=CFS command. The first message in the group is IST1370I. See the explanation of that message for a complete description.

IST1831I *percent* **OF SYSTEM CSA STORAGE REMAINING =** *sys_csa_avail*

Explanation: This message is part of a group of messages that VTAM issues in response to a DISPLAY BFRUSE command. The first message in the group is IST449I. See the explanation of that message for a full description.

IST1832I CSALIMIT VALUE *csa_limit* **MIGHT BE TOO SMALL**

Explanation: VTAM issues this message when a nonzero value is specified for CSALIMIT that is less than 25 Megabytes (25 000 Kilobytes) and the ,F modifier is specified to make it an absolute setting. This message is informational because the value coded might be appropriate for your system.

csa_limit is the CSA limit specified in the CSALIMIT start option or a modify CSALIMIT command.

System Action: Processing continues.

Operator Response: When VTAM is active, issue a DISPLAY BFRUSE,BUFFER=* command and save the console output for the system programmer.

Programmer Response: See the *z/OS Communications Server: SNA Resource Definition Reference* and the *z/OS Communications Server: SNA Network Implementation Guide* for information about setting the CSALIMIT value too low. See the *z/OS Communications Server: SNA Operation* for details on using the VTAM DISPLAY BFRUSE command output to determine the currently available and the total system CSA.

IST1833I CSA STORAGE ALLOCATION EXCEEDS SPECIFIED CSALIMIT VALUE

Explanation: A CSA storage request caused VTAM to exceed the value specified for CSALIMIT.

System Action: Processing continues.

Operator Response: Monitor CSA storage usage with the DISPLAY BFRUSE,BUFFER=* command. See the *z/OS Communications Server: SNA Operation* for details. Save this console output for the System Programmer.

Programmer Response: Determine if the current value for CSALIMIT is set too low and modify it, if necessary. See the *z/OS Communications Server: SNA Resource Definition Reference* for information about specifying a low CSALIMIT value. See the *z/OS Communications Server: SNA Operation* for details on using the VTAM DISPLAY BFRUSE command output to determine the currently available and the total system CSA. See the *z/OS Communications Server: SNA Diagnosis Vol 1, Techniques and Procedures* about storage problem procedures for CSA storage problems.

IST1834I LIST DVIPA SYSNAME TCPNAME #ENTRIES TGCOUNT SEQNUMBER

Explanation: This message is part of a group of messages VTAM issues in response to a DISPLAY STATS,TYPE=CFS command. The first message in the group is IST1370I. See the explanation of that message for a complete description.

IST1835I *list dvipa*

Explanation: This message is part of a group of messages VTAM issues in response to a DISPLAY STATS,TYPE=CFS command. The first message in the group is IST1370I. See the explanation of that message for a complete description.

IST1836I *sysname tcpname #entries tgcount*

Explanation: This message is part of a group of messages VTAM issues in response to a DISPLAY STATS,TYPE=CFS command. The first message in the group is IST1370I. See the explanation of that message for a complete description.

IST1837I *sysname tcpname #entries seqnumber*

Explanation: This message is part of a group of messages VTAM issues in response to a DISPLAY STATS,TYPE=CFS command. The first message in the group is IST1370I. See the explanation of that message for a complete description.

IST1838I LIST ENTRY KEYS:

Explanation: This message is part of a group of messages VTAM issues in response to a DISPLAY STATS,TYPE=CFS command. The first message in the group is IST1370I. See the explanation of that message for a complete description.

IST1839I *list_entry_key*

Explanation: This message is part of a group of messages VTAM issues in response to a DISPLAY STATS,TYPE=CFS command. The first message in the group is IST1370I. See the explanation of that message for a complete description.

IST1841I ACTUAL DATA FLOW RATE = *actual units*

Explanation: VTAM issues this message as part of a group of messages in response to a DISPLAY ID command for a PU type 2.1 representing a rapid transport protocol (RTP) route. The first message in the group is IST1476I. See the description of that message for more information.

IST1842I NUMBER OF NLPS RETRANSMITTED = *retransmitted*

Explanation: VTAM issues this message as part of a group of messages in response to a DISPLAY ID command for a PU type 2.1 representing a rapid transport protocol (RTP) route when HPRDIAG=YES is specified. The first message in the group is IST1476I. See the description of that message for more information.

IST1843I NUMBER OF NLPS ON WAITING-TO-SEND QUEUE = *waitsend*

Explanation: VTAM issues this message as part of a group of messages in response to a DISPLAY ID command for a PU type 2.1 representing a rapid transport protocol (RTP) route when HPRDIAG=YES is specified. The first message in the group is IST1476I. See the description of that message for more information.

IST1844I ARB MODE = *mode*

Explanation: VTAM issues this message as part of a group of messages in response to a DISPLAY ID command for a PU type 2.1 representing a rapid transport protocol (RTP) route when HPRDIAG=YES is specified. The first message in the group is IST1476I. See the description of that message for more information.

IST1845I BOUNDARY DIVIDING REGIONS *lower* **AND** *upper* **=** *boundary* **MILLISECONDS**

Explanation: VTAM issues this message as part of a group of messages in response to a DISPLAY ID command for a PU type 2.1 representing a rapid transport protocol (RTP) route when HPRDIAG=YES is specified. The first message in the group is IST1476I. See the description of that message for more information.

IST1846I *type* **RECEIVER THRESHOLD =** *threshold* **MICROSECONDS**

Explanation: VTAM issues this message as part of a group of messages in response to a DISPLAY ID command for a PU type 2.1 representing a rapid transport protocol (RTP) route when HPRDIAG=YES is specified. The first message in the group is IST1476I. See the description of that message for more information.

IST1847I NUMBER OF NLPS ON WAITING-FOR-ACKNOWLEDGEMENT QUEUE = *waitack*

Explanation: VTAM issues this message as part of a group of messages in response to a DISPLAY ID command for a PU type 2.1 representing a rapid transport protocol (RTP) route when HPRDIAG=YES is specified. The first message in the group is IST1476I. See the description of that message for more information.

IST1848I SEND BYTE COUNT = *sendcount* **RECEIVE BYTE COUNT =** *receivecount*

Explanation: VTAM issues this message as part of a group of messages in response to a DISPLAY ID command for a PU type 2.1 representing a rapid transport protocol (RTP) route when HPRDIAG=YES is specified. The first message in the group is IST1476I. See the description of that message for more information.

IST1849I LARGEST NLP SENT = *size* **BYTES**

Explanation: VTAM issues this message as part of a group of messages in response to a DISPLAY ID command for a PU type 2.1 representing a rapid transport protocol (RTP) route when HPRDIAG=YES is specified. The first message in the group is IST1476I. See the description of that message for more information.

IST1850I LARGEST NLP RECEIVED = *size* **BYTES**

Explanation: VTAM issues this message as part of a group of messages in response to a DISPLAY ID command for a PU type 2.1 representing a rapid transport protocol (RTP) route when HPRDIAG=YES is specified. The first message in the group is IST1476I. See the description of that message for more information.

IST1851I SMOOTHED ROUND TRIP TIME = *smoothed_time* **MILLISECONDS**

Explanation: VTAM issues this message as part of a group of messages in response to a DISPLAY ID command for a PU type 2.1 representing a rapid transport protocol (RTP) route when HPRDIAG=YES is specified. The first message in the group is IST1476I. See the description of that message for more information.

IST1852I LIVENESS TIMER = *liveness* **SECONDS**

Explanation: VTAM issues this message as part of a group of messages in response to a DISPLAY ID command for a PU type 2.1 representing a rapid transport protocol (RTP) route when HPRDIAG=YES is specified. The first message in the group is IST1476I. See the description of that message for more information.

IST1853I NUMBER OF NLPS ON OUT-OF-SEQUENCE QUEUE = *out_of_sequence*

Explanation: VTAM issues this message as part of a group of messages in response to a DISPLAY ID command for a PU type 2.1 representing a rapid transport protocol (RTP) route when HPRDIAG=YES is specified. The first message in the group is IST1476I. See the description of that message for more information.

IST1854I NUMBER OF NLPS ON INBOUND SEGMENTS QUEUE = *inbound_segs*

Explanation: VTAM issues this message as part of a group of messages in response to a DISPLAY ID command for a PU type 2.1 representing a rapid transport protocol (RTP) route when HPRDIAG=YES is specified. The first message in the group is IST1476I. See the description of that message for more information.

IST1855I NUMBER OF SESSIONS USING RTP = *sessions*

Explanation: VTAM issues this message as part of a group of messages in response to a DISPLAY ID command for a PU type 2.1 representing a rapid transport protocol (RTP) route. The first message in the group is IST1476I. See the description of that message for more information.

IST1856I LAST PATH SWITCH OCCURRENCE WAS ON *date* **AT** *time*

Explanation: VTAM issues this message as part of a group of messages in response to a DISPLAY ID command for a PU type 2.1 representing a rapid transport protocol (RTP) route when HPRDIAG=YES is specified. The first message in the group is IST1476I. See the description of that message for more information.

IST1857I BACKPRESSURE REASON COUNTS:

Explanation: VTAM issues this message as part of a group of messages in response to a DISPLAY ID command for a PU type 2.1 representing a rapid transport protocol (RTP) route when HPRDIAG=YES is specified. The first message in the group is IST1476I. See the description of that message for more information.

IST1858I PATHSWITCH SEND QUEUE MAX STORAGE FAILURE

Explanation: VTAM issues this message as part of a group of messages in response to a DISPLAY ID command for a PU type 2.1 representing a rapid transport protocol (RTP) route when HPRDIAG=YES is specified. The first message in the group is IST1476I. See the description of that message for more information.

IST1859I *pathswitch sendqmax storefail*

Explanation: VTAM issues this message as part of a group of messages in response to a DISPLAY ID command for a PU type 2.1 representing a rapid transport protocol (RTP) route when HPRDIAG=YES is specified. The first message in the group is IST1476I. See the description of that message for more information.

IST1860I NUMBER OF NLPS SENT = *sent* **- OVERFLOW =** *overflow*

Explanation: VTAM issues this message as part of a group of messages in response to a DISPLAY ID command for a PU type 2.1 representing a rapid transport protocol (RTP) route when HPRDIAG=YES is specified. The first message in the group is IST1476I. See the description of that message for more information.

IST1861I NUMBER OF NLPS RECEIVED = *received* **- OVERFLOW =** *overflow*

Explanation: VTAM issues this message as part of a group of messages in response to a DISPLAY ID command for a PU type 2.1 representing a rapid transport protocol (RTP) route when HPRDIAG=YES is specified. The first message in the group is IST1476I. See the description of that message for more information.

IST1862I ARB MAXIMUM SEND RATE = *maximum units*

Explanation: VTAM issues this message as part of a group of messages in response to a DISPLAY ID command for a PU type 2.1 representing a rapid transport protocol (RTP) route when HPRDIAG=YES is specified. The first message in the group is IST1476I. See the description of that message for more information.

IST1863I SUBAREA INDEX ELEMENT

Explanation: This message is the first of a group of messages that VTAM issues in response to a DISPLAY VTAMSTOR command to display storage contents associated with a resource name or a network address. A complete description of the message group follows:

```
IST1863I SUBAREA           INDEX                ELEMENT
IST1864I X'saHex'(saDec)   X'indHex' (indDec)   X'eleHex' (eleDec)
IST1573I type STORAGE DISPLAY BEGINS AT LOCATION address
IST1574I offset hexdata_1 hexdata_2 hexdata_3 hexdata_4 EBCDIC_data
IST1574I offset hexdata_1 hexdata_2 hexdata_3 hexdata_4 EBCDIC_data
IST1574I offset hexdata_1 hexdata_2 hexdata_3 hexdata_4 EBCDIC_data
:
IST314I END
```

IST1573I

type indicates the type of storage being displayed. The values for *type* are RDTE or RDTE PROFILE.

address indicates the hexadecimal storage address for the beginning of the display.

IST1574I

This message displays storage beginning at the address indicated in message IST1573I. This message is issued as many times as necessary to display the entire RDTE or RDTE profile.

offset is the hexadecimal offset of the storage from the address in message IST1573I.

hexdata_1, *hexdata_2*, *hexdata_3*, and *hexdata_4* each display four bytes of the storage in hexadecimal format.

EBCDIC_data displays sixteen bytes of the storage in EBCDIC format.

IST1863I

This message is the header for the information displayed in IST1864I.

IST1864I

This message provides the requested network address in hexadecimal and decimal.

saHex is the subarea address in hexadecimal.

saDec is the subarea address in decimal.

indHex is the index in hexadecimal.

indDec is the index in decimal.

eleHex is the element in hexadecimal.

eleDec is the element in decimal.

System Action: None.

Operator Response: None.

Programmer Response: None.

IST1864I **X'***saHex***'(***saDec***) X'***indHex***' (***indDec***) X'***eleHex***' (***eleDec***)**

Explanation: This is part of the message group that begins with message IST1863I. See the explanation of that message for a complete description.

IST1865I **GLOBAL INOPDUMP =** *status*

Explanation: This message is the first in a group of messages in response to the DISPLAY INOPDUMP or MODIFY INOPDUMP commands. Possible message groups follow:

- In response to a DISPLAY INOPDUMP command:

```
 IST1865I GLOBAL INOPDUMP = status
[IST1866I TRLE = trlename INOPDUMP = status]
```

- In response to a MODIFY INOPDUMP command:

```
 IST1865I GLOBAL INOPDUMP = status
[IST1866I TRLE = trlename INOPDUMP = status]
[IST1867I INOPDUMP = status FOR ALL TRLE BASED RESOURCES]
 IST223I  MODIFY INOPDUMP COMMAND COMPLETE
```

- In response to a MODIFY VTAMOPTS, INOPDUMP = ON command:

```
IST1865I GLOBAL INOPDUMP = status
IST1867I INOPDUMP = status FOR ALL TRLE BASED RESOURCES
IST223I  MODIFY COMMAND COMPLETE
```

IST223I

VTAM issues this message when the MODIFY command has successfully completed.

IST1865I

status can be one of the following:

– ON indicates that all active non-TRLE controlled resources might attempt to initiate an automatic VTAM dump when an inoperative condition is detected.

– OFF indicates that no active non-TRLE controlled resources will attempt to initiate an automatic VTAM dump when an inoperative condition is detected.

The global INOPDUMP status is the default used to initialize each TRLE-based resource INOPDUMP status when the TRLEs are activated.

IST1866I

trlename is the name of the TRLE for which status is being reported.

status can be one of the following:

– ON indicates that the resources defined within the TRLE might attempt to initiate an automatic VTAM dump when an inoperative condition is detected.

– OFF indicates that the resources defined within the TRLE will not attempt to initiate an automatic VTAM dump when an inoperative condition is detected.

IST1867I

status can be one of the following:

– ON indicates that the INOPDUMP status for every TRLE within the TRL major node has been set to ON.

– OFF indicates that the INOPDUMP status for every TRLE within the TRL major node has been set OFF.

This message is a reminder to the operator that use of the MODIFY VTAMOPTS,INOPDUMP command or a global MODIFY INOPDUMP command also sets the INOPDUMP status for each TRLE within the TRL major node. However, if the TRL major node is not active, this message will not appear in the response.

System Action: Processing continues

Operator Response: None.

Programmer Response: None.

IST1866I TRLE = *trlename* **INOPDUMP =** *status*

Explanation: VTAM issues this message as part of the response to the following commands:

- DISPLAY INOPDUMP to show all TRLEs for which INOPDUMP = ON. See message IST1865I for an example of this message group.
- MODIFY INOPDUMP (with the TRLE operand) to show the new INOPDUMP status of each TRLE in the operand list. See message IST1865I for an example of this message group.
- DISPLAY ID=trlename when INOPDUMP=ON for trlename.
- DISPLAY TRL,TRLE=trlename when INOPDUMP=ON for trlename.

trlename is the name of the TRLE for which status is being reported.

status can be one of the following:

- ON indicates that the resources defined within the TRLE might attempt to initiate an automatic VTAM dump when an inoperative condition is detected.
- OFF indicates that the resources defined within the TRLE will not attempt to initiate an automatic VTAM dump when an inoperative condition is detected.

System Action: Processing continues.

Operator Response: None.

Programmer Response: None.

IST1867I INOPDUMP = *status* **FOR ALL TRLE-BASED RESOURCES**

Explanation: This message is part of a message group that begins with message IST1865I. See the explanation of that message for a complete description.

Chapter 10. ISU messages for VTAM network operators

This chapter lists the VTAM messages beginning with ISU that can appear on a network operator's console.

See Appendix E, "Message text for VTAM operator messages" on page 769 for a list of the text of all VTAM operator messages.

ISU1500I SOCKETS-OVER-SNA JOB: *jobname* **APPLID:** *applid*

Explanation: This message is the first in several different message groups that sockets-over-SNA issues to provide status information. This message serves as a header message for most of the sockets-over-SNA displays.

jobname is the name of the job used to start sockets-over-SNA.

applid is the name of the application identifier used to open the sockets-over-SNA ACB. ***N/A*** is displayed if the application identifier is not known.

System Action: Processing continues.

Operator Response: None.

Programmer Response: None.

ISU1501I SOCKETS-OVER-SNA *jobname* **INITIALIZATION COMPLETE**

Explanation: Sockets-over-SNA issues this message when it initializes successfully.

jobname is the name of the job used to start sockets-over-SNA.

System Action: Processing continues.

Operator Response: None.

Programmer Response: None.

ISU1502I ENVVAR VALUE IS NOT VALID, DEFAULT USED

Explanation: This message is part of a group of messages that sockets-over-SNA issues when it encounters an ENVVAR parameter with a value that is not valid. A complete description of the message group follows:

```
ISU1500I  SOCKETS-OVER-SNA JOB: jobname APPLID: applid
ISU1502I  ENVVAR VALUE IS NOT VALID, DEFAULT USED
ISU1512I  parameter_name IS SET TO value
ISU1516I  END OF SOCKETS-OVER-SNA MESSAGE GROUP
```

ISU1500I

jobname is the name of the job used to start sockets-over-SNA.

applid is the application identifier used to open the sockets-over-SNA ACB. **UNKNOWN** is displayed if the application identifier is not known.

ISU1512I

parameter_name is the ENVVAR parameter that has the value that is not valid.

value is the default value that has been assigned to the parameter.

System Action: The default value is used for the parameter.

Operator Response: Save the system log for problem determination.

Programmer Response: The default value was used for the *parameter_name* parameter. If you want to redefine any of the parameters, you must deactivate sockets-over-SNA, correct the ENVVAR statment in error, then reactivate sockets-over-SNA.

© Copyright IBM Corp. 1984, 2002

ISU1508I UNABLE TO ALLOCATE STORAGE

Explanation: This message is part of a group of messages that sockets-over-SNA issues when it is unable to allocate sockets-over-SNA private storage. A complete description of the message group follows:

```
ISU1500I   SOCKETS-OVER-SNA JOB: jobname  APPLID: applid
ISU1508I   UNABLE TO ALLOCATE STORAGE
ISU1516I   END OF SOCKETS-OVER-SNA MESSAGE GROUP
```

ISU1500I

jobname is the name of the job used to start sockets-over-SNA.

applid is the name of the application identifier used to open the sockets-over-SNA ACB. **UNKNOWN** is displayed if the application identifier is not known.

System Action: Processing continues.

Operator Response: Dump the sockets-over-SNA application. Save the system log and dump for problem determination.

Programmer Response: Increase the value for REGION in the JCL. Refer to the *z/OS MVS JCL User's Guide* for more information.

If the problem persists and you cannot determine the cause of the problem from the output provided, take the following actions:

- If you have access to IBMLink, search for known problems in this area. If no applicable matches are found, report the problem to IBM by using the Electronic Technical Report (ETR) option on IBMLink.
- If you do not have access to IBMLink, report the problem to the IBM software support center.

ISU1511I SOCKETS-OVER-SNA *jobname* SHUTDOWN INITIATED

Explanation: Sockets-over-SNA issues this message when it has begun termination.

jobname is the name of the job used to start sockets-over-SNA.

System Action: Processing continues.

Operator Response: None.

Programmer Response: None.

ISU1512I *parameter_name* IS SET TO *value*

Explanation: This message is part of a group of messages that sockets-over-SNA issues when it encounters an ENVVAR parameter with a value that is not valid. See the explanation of message ISU1502I for a complete description of the group.

ISU1513I SOCKETS-OVER-SNA *jobname* SHUTDOWN COMPLETE

Explanation: Sockets-over-SNA issues this message when it has been terminated.

jobname is the name of the job used to start sockets-over-SNA.

System Action: Processing continues.

Operator Response: None.

Programmer Response: None.

ISU1516I END OF SOCKETS-OVER-SNA MESSAGE GROUP

Explanation: This message marks the end of a sockets-over-SNA message group. See previous messages in the group for more information.

System Action: Processing continues.

Operator Response: None.

Programmer Response: None.

ISU1517I UNABLE TO MAP IP ADDRESS *ip_address* TO LU

Explanation: Sockets-over-SNA issues this message when it is unable to map an IP address to an LU name.

- This message is issued as a single line message when a connect request or datagram from a partner is received.
- This message is part of a message group when it is issued during sockets-over-SNA configuration of the SNA0 interface, and the configuration of the SNA0 interface fails. See the explanation of message ISU1519I for a complete description of the group.

System Action: Processing continues.

- If this message is issued as a single line message, the incoming connect request or datagram is discarded.
- If this message is issued as part of a message group, the configuration of the SNA0 interface fails.

Operator Response: Save the system log for problem determination.

Programmer Response:

- If this message is issued as a single line message, the machine with *ip_address* is attempting to communicate with the local machine, but the local machine has no entry in its IP to LU mapping table which matches *ip_address*.

  Use the SXMAP utility to update the IP to LU mapping table to contain a mapping for *ip_address*.
- If this message is issued as part of a message group, the IP to LU mapping table does not contain any entry which matches *ip_address*.

  Use the SXMAP utility to update the IP to LU mapping table to contain a mapping for *ip_address* and issue the IFCONFIG command.

ISU1519I ERROR CONFIGURING SNA0 INTERFACE

Explanation: This message is part of a group of messages that sockets-over-SNA issues when the sockets-over-SNA configuration of the SNA0 interface fails. Possible message groups follow.

```
 ISU1500I SOCKETS-OVER-SNA JOB: jobname APPLID: applid
 ISU1519I ERROR CONFIGURING SNA0 INTERFACE
 ISU1520I VTAM macroname MACRO FAILED
 ISU1521I REGISTER regnum = regval
⋮
[ISU1525I RTNCD = rtncd FDB2 = fdb2]
[ISU1526I SSENSEI = ssensei SSENSMI = ssensmi]
[ISU1523I ACB ERROR FIELD = acberflg]
 ISU1516I END OF SOCKETS-OVER-SNA MESSAGE GROUP

 ISU1500I SOCKETS-OVER-SNA JOB: jobname APPLID: applid
 ISU1519I ERROR CONFIGURING SNA0 INTERFACE
 ISU1522I MVS LOAD MACRO FAILED FOR MODULE modulename
 ISU1521I REGISTER regnum = regval
⋮
 ISU1516I END OF SOCKETS-OVER-SNA MESSAGE GROUP

 ISU1500I SOCKETS-OVER-SNA JOB: jobname APPLID: applid
 ISU1519I ERROR CONFIGURING SNA0 INTERFACE
 ISU1517I UNABLE TO MAP IP ADDRESS ip_address TO LU
 ISU1516I END OF SOCKETS-OVER-SNA MESSAGE GROUP
⋮
 ISU1516I END OF SOCKETS-OVER-SNA MESSAGE GROUP

 ISU1500I SOCKETS-OVER-SNA JOB: jobname APPLID: applid
 ISU1519I ERROR CONFIGURING SNA0 INTERFACE
 ISU1572I FAILURE ALLOCATING LE/370 ENVIRONMENT FOR SNA0 INTERFACE
 ISU1516I END OF SOCKETS-OVER-SNA MESSAGE GROUP
```

ISU1500I

jobname is the name of the job used to start sockets-over-SNA.

applid is the name of the application identifier used to open the sockets-over-SNA ACB. ***N/A*** is displayed if the application identifier is not known.

ISU1519I

ISU1517I

This message indicates that the IP to LU mapping table does not contain any entry that matches the IP address contained in the message.

ip_address is the IP address. It is in dotted notation in the format 123.456.789.012.

ISU1519I

This message indicates configuration of the SNA0 interface failed.

ISU1520I

The SNA0 interface configuration failed because the macro indicated by *macroname* completed with a nonzero return code.

macroname is the name of the macro that failed. Possible values are **MODCB, OPEN, and SETLOGON**.

If **MODCB** fails, ISU1523I, ISU1525I, and ISU1526I are not displayed.

If **OPEN** fails, ISU1523I is displayed.

If **SETLOGON** fails, ISU1525I and ISU1526I are displayed.

ISU1521I

This message is displayed when the contents of the register *regnum* are significant for problem determination. It may be repeated until all of the necessary register information is displayed.

regnum identifies the register.

regval is the value for the register.

ISU1522I

The SNA0 interface configuration failed because the LOAD macro completed with a nonzero return code.

modulename is the name of the load module for which the load failed.

ISU1523I

The SNA0 interface configuration failed while trying to open the sockets-over-SNA ACB.

acberflg is the ERROR field of the ACB. It is a hexadecimal value returned by the OPEN macroinstruction and indicates the specific nature of the error encountered.

ISU1525I

This message is issued when a nonzero return code is received while executing an RPL-based macro.

rtncd is the value returned in the RPLRTNCD field of the RPL by the failing macro.

fdb2 is the value returned in the RPLFDB2 field of the RPL by the failing macro.

ISU1526I

This message is issued when a nonzero return code is received while executing an RPL-based macro.

ssensei is the value returned in the RPLSSEI field of the RPL by the failing macro.

ssensmi is the value returned in the RPLSSMI field of the RPL by the failing macro.

ISU1572I

This message is issued when a failure occurs allocating an LE/370 environment for sockets-over-SNA.

System Action: Processing continues; however, configuration of the SNA0 interface fails.

Operator Response: Save the system log for problem determination.

Programmer Response:

- If ISU1517I is issued, use the SXMAP utility to update the IP to LU mapping table to contain a mapping for the IP address, and run the ISTSKIFC program to configure the SNA0 interface again.
- If ISU1520I is issued, correct the problem, and run the ISTSKIFC program to configure the SNA0 interface again. See *z/OS Communications Server: IP and SNA Codes* for more information on OPEN ACB macroinstruction error fields, RTNCD and FDB2 return codes, and SNA sense field values for SSENSEI and SSENSMI. See *z/OS Communications Server: SNA Programming* for information on interpreting values for registers.

- If ISU1522I is issued, correct the problem, and issue the ISTSKIFC program to configure the SNA0 interface again. See the appropriate MVS document for more information on interpreting the register values for MVS LOAD macro failures.
- If ISU1572I is issued, stop sockets-over-SNA, increase the storage available to sockets-over-SNA, and start sockets-over-SNA. Run the ISTSKIFC program to configure the SNA0 interface again.

If you cannot determine the cause of the problem from the output provided, take the following actions:

- If you have access to IBMLink, search for known problems in this area. If no applicable matches are found, report the problem to IBM by using the Electronic Technical Report (ETR) option on IBMLink.
- If you do not have access to IBMLink, report the problem to the IBM software support center.

ISU1520I VTAM *macroname* **MACRO FAILED**

Explanation: This message is part of a group of messages that sockets-over-SNA issues in the following situations:

- When the sockets-over-SNA configuration of the SNA0 interface fails because the macro indicated by *macroname* completed with a nonzero return code. See message ISU1519I for a complete description of this message group.
- When sockets-over-SNA is shutting down, and the VTAM CLOSE macro has completed with a nonzero return code. A complete description of the message group follows.

```
ISU1500I  SOCKETS-OVER-SNA JOB: jobname  APPLID: applid
ISU1520I  VTAM CLOSE MACRO FAILED
ISU1521I  REGISTER regnum = regval
⋮
ISU1523I  ACB ERROR FIELD = acberflg
ISU1516I  END OF SOCKETS-OVER-SNA MESSAGE GROUP
```

ISU1500I

jobname is the name of the job used to start sockets-over-SNA.

applid is the application identifier used to open the sockets-over-SNA ACB. **UNKNOWN** is displayed if the application identifier is not known.

ISU1521I

This message is displayed when the contents of register *regnum* are significant for problem determination. It may be repeated until all of the necessary register information is displayed.

regnum identifies the register.

regval is the value for the register.

ISU1523I

acberflg is the ERROR field of the ACB. It is a hexadecimal value returned by the CLOSE macro and indicates the specific nature of the error encountered.

System Action: If ISU1519I is issued, processing continues; however, configuration of the SNA0 interface fails. If ISU1519I is not issued, sockets-over-SNA continues to shut down.

Operator Response: Save the system log for problem determination.

Programmer Response: See the *z/OS Communications Server: IP and SNA Codes* for more information on the CLOSE ACB macro error fields. See *z/OS Communications Server: SNA Programming* to interpret the values for the registers.

If you cannot determine the cause of the problem from the output provided, take the following actions:

- If you have access to IBMLink, search for known problems in this area. If no applicable matches are found, report the problem to IBM by using the Electronic Technical Report (ETR) option on IBMLink.
- If you do not have access to IBMLink, report the problem to the IBM software support center.

ISU1521I REGISTER *regnum* **=** *regval*

Explanation: Sockets-over-SNA issues this message as part of a group when sockets-over-SNA processing fails, and the contents of the register named by *regnum* are significant for problem determination. See the explanation of messages ISU1519I, ISU1520I or ISU1532I for a complete description of the message group.

ISU1522I MVS LOAD MACRO FAILED FOR MODULE *modulename*

Explanation: Sockets-over-SNA issues this message as part of a group when the sockets-over-SNA load fails because the LOAD macro completed with a nonzero return code. See the explanation of message ISU1519I for a complete description of this message group.

ISU1523I ACB ERROR FIELD = *acberflg*

Explanation: This message is part of a group of messages that sockets-over-SNA issues in the following situations:

- When the sockets-over-SNA configuration of the SNA0 interface fails while trying to open the sockets-over-SNA ACB. See the explanation of message ISU1519I for a description of this message group.
- When sockets-over-SNA is shutting down and the VTAM CLOSE macro has completed with a nonzero return code. See the explanation of message ISU1520I for a description of this message group.

ISU1524I CONVERSATION = *conversation_id*

Explanation: This message is part of a group of messages that sockets-over-SNA issues when it issues an APPCCMD which fails. See the explanation of message ISU1532I for a description of this message group.

ISU1525I RTNCD = *rtncd* **FDB2 =** *fdb2*

Explanation: This message is part of a group of messages that sockets-over-SNA issues when it receives a nonzero return code while executing the SETLOGON macro or when sockets-over-SNA issues an APPCCMD which fails. See the explanation of messages ISU1519I or ISU1532I for a complete description of the message group.

ISU1526I SSENSEI = *ssensei* **SSENSMI =** *ssensmi*

Explanation: This message is part of a group of messages that sockets-over-SNA issues when the sockets-over-SNA configuration of the SNA0 interface fails while executing the SETLOGON macro. See the explanation of message ISU1519I for a description of this message group.

ISU1527I COULD NOT ALLOCATE *byte_num* **BYTES OF STORAGE**

Explanation: This message is part of a group of messages that sockets-over-SNA issues when *byte_num* storage could not be allocated by the C run-time routine, **MALLOC**, for sockets-over-SNA send data processing. The complete message group is as follows:

```
ISU1500I SOCKETS-OVER-SNA JOB: jobname  APPLID: applid
ISU1527I COULD NOT ALLOCATE byte_num BYTES OF STORAGE
ISU1528I CONVERSATION conversation_id NOT USABLE FOR SEND PROCESSING
ISU1516I END OF SOCKETS-OVER-SNA MESSAGE GROUP
```

ISU1500I

jobname is the name of the job used to start sockets-over-SNA.

applid is the name of the application identifier used to open the sockets-over-SNA ACB. **UNKNOWN** is displayed if the application identifier is not known.

ISU1527I

byte_num is the decimal number of bytes of storage that could not be allocated for sockets-over-SNA send data processing.

ISU1528I

conversation_id is the VTAM conversation identifier assigned to the conversation. It is the RPL6 field, **RPL6CID**, and may be used to correlate traces and dumps with this message. Refer to *z/OS Communications Server: SNA Programmer's LU 6.2 Guide* for more information regarding the conversation identifier **RPL6CID**.

System Action: The conversation associated with the send is deallocated. Subsequent attempts to send data on the socket associated with the conversation will fail. Receive processing for the associated socket continues.

Operator Response: Save the system log for problem determination.

Programmer Response: The socket application should be prepared to take appropriate recovery action when send requests fail. Send processing for this socket will not resume unless the socket is closed and then opened again. The underlying cause of this failure can be corrected by increasing the run-time storage available to sockets-over-SNA. Refer to the *IBM C/370 Programming Guide* for information on increasing the run time storage available to sockets-over-SNA. You may also need to increase the value for REGION in the JCL. Refer to the *z/OS MVS JCL User's Guide* for more information.

ISU1528I CONVERSATION *conversation_id* **NOT USABLE FOR SEND PROCESSING**

Explanation: This message is part of a group of messages that sockets-over-SNA issues when an error occurs while sending data on a sockets-over-SNA conversation. See the explanation of message ISU1527I for a description of this message group.

ISU1532I APPCCMD ERROR REQUEST = *request_type* **STAGE =** *stage*

Explanation: This message is part of a group of messages that sockets-over-SNA issues when it issues an APPCCMD which fails. A complete description of the message group follows:

```
ISU1500I SOCKETS-OVER-SNA JOB: jobname  APPLID: applid
ISU1532I APPCCMD ERROR REQUEST = request_type STAGE = stage
ISU1521I REGISTER regnum = regval
⋮
ISU1525I RTNCD = rtncd FDB2 = fdb2
ISU1533I RCPRI = rcpri RCSEC = rcsec
ISU1524I CONVERSATION = conversation_id
ISU1516I END OF SOCKETS-OVER-SNA MESSAGE GROUP
```

ISU1500I

jobname is the name of the job used to start sockets-over-SNA.

applid is the name of the application identifier used to open the sockets-over-SNA ACB. **UNKNOWN** is displayed if the application identifier is not known.

ISU1532I

request_type indicates what type of APPCCMD request failed. Possible values are:

ALLOC
CONTROL=ALLOC,QUALIFY=ALLOCD

CNOS CONTROL=OPRCNTL,QUALIFY=CNOS

DEALLOC
CONTROL=DEALLOC,QUALIFY=FLUSH

DISPLAY
CONTROL=OPRCNTL,QUALIFY=DISPLAY

RCVFMH5
CONTROL=RCVFMH5

RECEIVE
CONTROL=RECEIVE

RESET CONTROL=RESETRCV

SEND CONTROL=SEND,QUALIFY=DATAFLU, OPTCD=SYN

SENDASY
CONTROL=SEND,QUALIFY=DATAFLU, OPTCD=ASY

stage is the stage of execution at which the APPCCMD failed, either **ACCEPTANCE** or **COMPLETION**.

ISU1521I

This message may be repeated until all of the necessary register information is displayed.

regnum identifies the register.

regval is the value for the register.

ISU1525I

rtncd is the value returned in the RPLRTNCD field of RPL by the failing macro.

fdb2 is the value returned in the RPLFDB2 field of RPL by the failing macro.

ISU1533I

rcpri is the value returned by the APPCCMD in the RPL6RCPR field of the RPL6.

rcsec is the value returned by the APPCCMD in the RPL6RCSC field of the RPL6.

Refer to *z/OS Communications Server: SNA Programmer's LU 6.2 Guide* for information regarding the interpretation of the RPL6RCPR and RPL6RCSC values.

ISU1524I

conversation_id identifies the conversation.

System Action: System action varies according to which APPCCMD fails.

ALLOC, CNOS, DISPLAY
The socket application connect request is posted complete with a failing return code, such as ECONNABORT.

RCVFMH5
Processing continues.

RECEIVE
Processing continues.

SEND
The conversation associated with the failing APPCCMD is deallocated. Data queued for the associated socket may be lost. The error is propagated to the socket associated with the failing APPCCMD as a return code of ECONNABORT on the send request. Receive processing for the socket continues.

DEALLOC
Processing continues.

RESET
Processing continues. However, performance and storage utilization by sockets-over-SNA may be adversely impacted. The associated socket may not be able to receive data.

SENDASY
The conversation associated with the send is deallocated. Data queued for the associated socket may be lost. Subsequent send requests by the socket application for the socket associated with the send will fail. Receive processing for the socket continues.

Operator Response: Save the system log for problem determination. Provide the VTAM internal trace.

Programmer Response:

The socket application should be prepared to handle failing return codes. In general, when a conversation is deallocated, the socket is not usable for send processing until it has been closed and then opened.

Action depends upon which APPCCMD fails.

ALLOC, CNOS, DISPLAY
The socket application should be prepared to take recovery action when failing return codes are propagated to the associated socket.

RCVFMH5
Use the system log and return code values to assist you in solving the problem. If you still cannot solve the problem, contact the IBM software support center.

RECEIVE
Use the system log and return code values to assist you in solving the problem. If you still cannot solve the problem, contact the IBM software support center.

SEND
The socket application should be prepared to take recovery action when failing return codes are propagated to the associated socket.

DEALLOC
Use the system log and return code values to assist you in solving the problem. If you still cannot solve the problem, contact the IBM software support center.

RESET
Use the system log and return code values to assist you in solving the problem. If you still cannot solve the problem, contact the IBM software support center.

SENDASY
The socket application should be prepared to take recovery action when failing return codes are propagated to the associated socket.

Refer to *z/OS Communications Server: SNA Programmer's LU 6.2 Guide* for information regarding APPCCMD acceptance and completion stage error reporting. Refer to other messages in the group for more information regarding the error. Refer to *z/OS Communications Server: SNA Programmer's LU 6.2 Guide* information regarding the interpretation of the register values, RPL and RPL6 fields. The VTAM Internal Trace APPC option can provide information about the failing APPCCMD as well.

ISU1533I RCPRI = *rcpri* **RCSEC =** *rcsec*

Explanation: This message is part of a group of messages that sockets-over-SNA issues when it issues an APPCCMD which completes with a nonzero return code. See the explanation of message ISU1532I for a description of this message group.

ISU1534I INCONSISTENCY IN MAPPING IP ADDRESS *ip_address* **TO LU**

Explanation: This message is part of a group of messages that sockets-over-SNA issues when it is able to map an IP address to an LU name, but the mapped LU name is not the expected LU name. Possible message groups follow.

```
ISU1500I SOCKETS-OVER-SNA JOB: jobname  APPLID: applid
ISU1534I INCONSISTENCY IN MAPPING IP ADDRESS ip_address TO LU
ISU1535I SOURCE LU source_lu - MAPPED LU mapped_lu
ISU1516I END OF SOCKETS-OVER-SNA MESSAGE GROUP
```

ISU1500I

jobname is the name of the job used to start sockets-over-SNA.

applid is the name of the identifier used to open the sockets-over-SNA ACB. **UNKNOWN** is displayed if the application identifier is not known.

ISU1534I

ip_address is the IP address. It is in the dotted decimal notation form 123.456.789.012.

ISU1535I

source_lu is the LU name that is expected. It is the name of the LU that sent the incoming connect request or datagram that caused the message group to be generated. It is displayed as a network-qualified name in the form *netid.name*.

mapped_lu is the LU name which is determined from the incoming IP address *ip_address*. This is the LU to which the local machine maps the incoming IP address, based on the contents of the IP to LU mapping table. It is displayed as a network-qualified name in the form *netid.name*.

System Action: The connect request or datagram is discarded.

Operator Response: Dump the sockets-over-SNA application. Save the system log and dump for problem determination.

Programmer Response: This message indicates that the IP to LU mapping tables on the local and remote sockets-over-SNA machines are inconsistent. Use the SXMAP utility to ensure that the following are correct on both machines:

- The IP addresses contained in the mapping tables.
- The subnet masks for each IP address.
- The LU template for each IP address.

Use the SXMAP utility to correct any errors found in the IP to LU mapping tables.

ISU1535I SOURCE LU *source_lu* **- MAPPED LU** *mapped_lu*

Explanation: This message is part of a group of messages that sockets-over-SNA issues when it is able to map an IP address to an LU name, but the mapped LU name is not the expected LU name. See the explanation of message ISU1534I for a description of this message group.

ISU1538I SOCKETS-OVER-SNA MESSAGE GROUP: *jobname*

Explanation: Sockets-over-SNA issues this message as a header for certain message groups.

jobname is the name of the job used to start sockets-over-SNA.

System Action: Processing continues.

Operator Response: None.

Programmer Response: None.

ISU1554I SESSION LIMIT OF *session_limit* **EXCEEDED**

Explanation: This message is part of a group of messages that sockets-over-SNA issues when an attempt is made to allocate a conversation that would cause sockets-over-SNA to exceed the maximum number of sessions allowed with a remote sockets-over-SNA. A complete description of the message group follows:

```
ISU1500I SOCKETS-OVER-SNA JOB: jobname APPLID: applid
ISU1554I SESSION LIMIT OF session_limit EXCEEDED
ISU1529I PARNER LU = luname LOGMODE = modename
ISU1516I END OF SOCKETS-OVER-SNA MESSAGE GROUP
```

IST1500I

jobname is the name of the job used to start sockets-over-SNA.

applid is the name of the application identifier used to open the sockets-over-SNA ACB. **UNKNOWN** is displayed if the application identifier is not known.

ISU1529I

luname is the name of the partner LU with whom the session was lost. It is displayed as a network-qualified name in the form *netid.name*.

modename is the LOGMODE name.

IST1554I

session_limit indicates the maximum number of sessions allowed with the remote sockets-over-SNA. If the conversation was attempted because of an API call, the call fails and *errno* is set to ECONNABORTED.

System Action: Processing continues.

Operator Response: Increase the number of sessions that sockets over SNA is allowed to establish with the remote sockets over SNA.

- For MVS sockets-over-SNA, this value is controlled by the DSESLIM operand on the APPL definition statement for sockets-over-SNA.
- For OS/2 sockets-over-SNA, this value is specified on the command line when sockets over SNA is started. If no value is specified on the command line, the default value is used.

Programmer Response: If the application program needs to take some special action when this situation occurs,

check for the *errno* value ECONNABORTED after a connect API call (for stream sockets) or after sending data on a datagram socket.

ISU1557I ERROR RC *X'value'* **FROM MVS SERVICE** *name*

Explanation: This message is part of a group of messages that Sockets over SNA issues when an unexpected return code is received from an MVS service. A complete description of the message group follows:

```
 ISU1538I  SOCKETS-OVER-SNA MESSAGE GROUP: jobname
 ISU1557I  ERROR RC X'value' FROM MVS SERVICE name
[ISU1576I  TRACING DISABLED]
[ISU1564I  OPENEDITION REQUEST FAILED]
 ISU1516I  END OF SOCKETS-OVER-SNA MESSAGE GROUP
```

ISU1538I

jobname is the name of the job used to start Sockets over SNA.

ISU1557I

name is an MVS service name.

value is the return code value.

ISU1564I

This message indicates that a request from an z/OS UNIX application cannot be successfully processed.

ISU1576I

This message indicates that tracing was halted because of the failure indicated by ISU1557I.

System Action:

- If message ISU1564I is issued, processing continues.
- If message ISU1576I is issued, the sockets-over-SNA trace is stopped.
- If *name* in message ISU1557I is OSI_WAIT, OSI_POST, ISGLOBT, ISGLREL, or ISGLCR, Sockets over SNA issues an ABEND and halts.

Operator Response: Save the system log for problem determination.

Programmer Response:

- When message ISU1557I and ISU1564I are issued:
  - If *name* in message ISU1557I begins with OSI, refer to the *OS/390 OpenEdition MVS File System Reference* for information regarding the return codes in the message.
  - If *name* in message ISU1557I does not begin with OSI, refer to the *MVS/ESA Programming: Authorized Assembler Services Reference* for information regarding the return codes in the message.
  - Ensure the installed MVS supports all services required by z/OS UNIX Sockets over SNA.
  - Refer to *z/OS Communications Server: AnyNet Sockets over SNA* for installation requirements for Sockets-over-SNA.
- When message ISU1557I is issued and you cannot determine the cause of the problem from the output provided, take the following actions:
  - If you have access to IBMLink, search for known problems in this area. If no applicable matches are found, report the problem to IBM by using the Electronic Technical Report (ETR) option on IBMLink.
  - If you do not have access to IBMLink, report the problem to the IBM software support center.

ISU1559I RV = *rv* **RC = X'***rc***' RSN = X'***rsn***'**

Explanation: This message is part of a group of messages that sockets-over-SNA issues when it receives an unexpected return value from an MVS callable service. See the explanation of message ISU1562I for a complete description of this group.

ISU1560I OPENEDITION TERMINATION FAILED -- NO RECOVERY ATTEMPTED

Explanation: This message is part of a group of messages that sockets-over-SNA issues when it detects a severe error while terminating the z/OS UNIX interface. See the explanation of messages ISU1557I, ISU1558I, or ISU1562I for a complete description of this group.

ISU1561I FAILURE UPDATING OPENEDITION SOCKET TABLE CMD = *cmd*

Explanation: This message is part of a group of messages that sockets-over-SNA issues when an error occurs communicating socket table status to z/OS UNIX sockets-over-SNA AF_INET physical file system. See the explanation of message ISU1562I for a complete description of this group.

ISU1562I OPENEDITION CALLABLE SERVICE *service* FAILED

Explanation: This message is part of a group of messages that sockets-over-SNA issues when it receives an unexpected return value from an MVS z/OS UNIX callable service. A complete description of the message group follows:

```
 ISU1538I  SOCKETS-OVER-SNA MESSAGE GROUP:jobname
 ISU1562I  OPENEDITION CALLABLE SERVICE service FAILED
 ISU1559I  RV = rv RC = X'rc' RSN = X'rsn'
[ISU1560I OPENEDITION TERMINATION FAILED -- NO RECOVERY ATTEMPTED]
[ISU1561I FAILURE UPDATING OPENEDITION SOCKET TABLE CMD = cmd]
[ISU1564I OPENEDITION REQUEST FAILED]
[ISU1565I OPENEDITION TERMINATED WITH ERRORS]
[ISU1567I FAILURE UPDATING OPENEDITION ROUTE TABLE - CMD = cmd]
[ISU1571I FAILURE TO REGISTER WITH OPENEDITION - CMD = cmd]
 ISU1516I END OF SOCKETS-OVER-SNA MESSAGE GROUP
```

ISU1538I

jobname is the name of the job used to start sockets-over-SNA.

ISU1559I

rv is the return value from the z/OS UNIX sockets-over-SNA AF_INET physical file system.

rc is the return code from the z/OS UNIX sockets-over-SNA AF_INET physical file system.

rsn is the reason code returned by z/OS UNIX sockets-over-SNA AF_INET physical file system.

ISU1560I

This message indicates that a severe error occurred while sockets-over-SNA was terminating the z/OS UNIX interface.

ISU1561I

cmd is the type of update that failed.

ISU1562I

service is the name of the MVS callable service.

ISU1564I

This message indicates that a request from an z/OS UNIX application cannot be successfully processed.

ISU1565I

This message indicates termination errors.

ISU1567I

cmd is the type of update that failed.

ISU1571I

cmd is the type of registration that failed.

System Action:

- If message ISU1560I is issued, z/OS UNIX sockets-over-SNA requests continue to fail until the underlying problem is corrected.
- If message ISU1564I or ISU1565I is issued, processing continues.
- If message ISU1567I is issued, it is possible that some z/OS UNIX sockets-over-SNA requests will continue to fail until the underlying problem is corrected.
- If message ISU1571I is issued, z/OS UNIX sockets-over-SNA requests continue to fail until the underlying problem is corrected.

Operator Response: Save the system log for problem determination.

Programmer Response:

- If message ISU1559I is issued, refer to *z/OS UNIX System Services Programming: Assembler Callable Services Reference* for more information regarding *rc* and *rsn* values and take the action indicated.
- If message ISU1560I is issued and you cannot determine the cause of the problem from the output provided, take the following actions:
  - If you have access to IBMLink, search for known problems in this area. If no applicable matches are found, report the problem to IBM by using the Electronic Technical Report (ETR) option on IBMLink.
  - If you do not have access to IBMLink, report the problem to the IBM software support center.
- If message ISU1564I is issued:
  - Refer to the *z/OS UNIX System Services Programming: Assembler Callable Services Reference* for information regarding the return codes in the message.
  - Ensure the installed MVS supports all services required by z/OS UNIX sockets-over-SNA.
  - Refer to *z/OS Communications Server: AnyNet Sockets over SNA* for installation requirements for sockets-over-SNA.
- If message ISU1567I is issued and you cannot determine the cause of the problem from the output provided, take the following actions:
  - If you have access to IBMLink, search for known problems in this area. If no applicable matches are found, report the problem to IBM by using the Electronic Technical Report (ETR) option on IBMLink.
  - If you do not have access to IBMLink, report the problem to the IBM software support center.
- If message ISU1570I is issued and you cannot determine the cause of the problem from the output provided, take the following actions:
  - If you have access to IBMLink, search for known problems in this area. If no applicable matches are found, report the problem to IBM by using the Electronic Technical Report (ETR) option on IBMLink.
  - If you do not have access to IBMLink, report the problem to the IBM software support center.

ISU1563I OPENEDITION SHARED DATA UPDATE FAILED

Explanation: This message is part of a group of messages that sockets-over-SNA issues when it cannot complete termination because it was unable to access storage shared by the z/OS UNIX sockets-over-SNA AF_INET physical file system and sockets-over-SNA. A complete description of the message group follows:

```
ISU1538I  SOCKETS-OVER-SNA MESSAGE GROUP:jobname
ISU1563I  OPENEDITION SHARED DATA UPDATE FAILED
ISU1565I  OPENEDITION TERMINATED WITH ERRORS
ISU1516I  END OF SOCKETS-OVER-SNA MESSAGE GROUP
```

ISU1538I

jobname is the name of the job used to start sockets-over-SNA.

ISU1565I

This message indicates termination errors.

System Action: Processing continues.

Operator Response: Save the system log for problem determination.

Programmer Response: If you cannot determine the cause of the problem from the output provided, take the following actions:

- If you have access to IBMLink, search for known problems in this area. If no applicable matches are found, report the problem to IBM by using the Electronic Technical Report (ETR) option on IBMLink.
- If you do not have access to IBMLink, report the problem to the IBM software support center.

ISU1564I OPENEDITION REQUEST FAILED

Explanation: This message is part of a group of messages that sockets-over-SNA issues when it receives a request from an z/OS UNIX application that it cannot successfully process. See the explanation of messages ISU1522I, ISU1557I, ISU1558I, or ISU1562I for a complete description of the group.

ISU1567I FAILURE UPDATING OPENEDITION ROUTE TABLE - CMD = *cmd*

Explanation: This message is part of a group of messages that sockets-over-SNA issues when an error occurs communicating socket routing table status to z/OS UNIX/MVS. See the explanation of message ISU1562I for a complete description of this group.

ISU1568I ENVVAR *parameter_name* **VALUE IS NOT VALID, ENVVAR IGNORED**

Explanation: This message is part of a group of messages that sockets-over-SNA issues when it encounters an ENVVAR with a value that is not valid. A complete description of the message group follows:

```
ISU1538I  SOCKETS-OVER-SNA JOB: jobname
ISU1568I  ENVVAR parameter_name VALUE IS NOT VALID, ENVVAR IGNORED
ISU1516I  END OF SOCKETS-OVER-SNA MESSAGE GROUP
```

ISU1538I

jobname is the name of the job used to start sockets-over-SNA.

ISU1568I

parameter_name is the ENVVAR parameter that has the value that is not valid.

System Action: The ENVVAR parameter is ignored.

Operator Response: Save the system log for problem determination.

Programmer Response: The ENVVAR *parameter_name* was ignored. To define the parameter, sockets-over-SNA must be deactivated to correct the ENVVAR statement in error.

ISU1569I ENVVAR *parameter_name1* **IGNORED**

Explanation: This message is part of a group of messages that sockets-over-SNA issues when it encounters an ENVVAR parameter which requires another ENVVAR parameter to be specified, but the second ENVVAR parameter was not specified. A complete description of the message group follows:

```
ISU1538I  SOCKETS-OVER-SNA JOB: jobname
ISU1569I  ENVVAR parameter_name1 IGNORED
ISU1570I  ENVVAR parameter_name2 MUST ALSO BE SPECIFIED
ISU1516I  END OF SOCKETS-OVER-SNA MESSAGE GROUP
```

ISU1538I

jobname is the name of the job used to start sockets-over-SNA.

ISU1569I

parameter_name1 is the ENVVAR parameter that has the value that is not valid.

ISU1570I

parameter_name2 is the ENVVAR parameter that must also be specified.

System Action: The ENVVAR parameter is ignored.

Operator Response: Save the system log for problem determination.

Programmer Response: The ENVVAR *parameter_name1* was ignored. To define the parameter, sockets-over-SNA must be deactivated to define ENVVAR *parameter_name2*.

ISU1570I ENVVAR *parameter_name2* **MUST ALSO BE SPECIFIED**

Explanation: This message is part of a group of messages that sockets-over-SNA issues when it encounters an ENVVAR parameter which requires another ENVVAR parameter to be specified, but the second ENVVAR parameter was not specified. See the explanation of message ISU1569I for a complete description of this group.

ISU1571I FAILURE TO REGISTER WITH OPENEDITION - CMD = *cmd*

Explanation: This message is part of a group of messages that sockets-over-SNA issues when an error occurs registering with z/OS UNIX/MVS. See the explanation of message ISU1562I for a complete description of this group.

ISU1576I TRACING DISABLED

Explanation: This message is part of several groups of messages that Sockets-over-SNA issues when it encounters an unrecoverable error while tracing. This also appears when SNACKETS is terminated. See the explanation of the message that precedes this message for a complete description of the group.

ISU1577I ERROR WRITING TO TRACE DATA SET - ERRNO *errno*

Explanation: This message is issued in a message group when Sockets over SNA encounters an error from which it cannot recover while writing a trace record. A complete description of the message group follows:

```
ISU1500I SOCKETS-OVER-SNA JOB: jobname APPLID: applid
ISU1577I ERROR WRITING TO TRACE DATA SET - ERRNO errno
ISU1576I TRACING DISABLED
ISU1516I END OF SOCKETS-OVER-SNA MESSAGE GROUP
```

ISU1500I

jobname is the name of the job used to start Sockets over SNA.

applid is the application identifier used to open the sockets-over-SNA ACB. ***N/A*** is displayed if the application identifier is not known.

ISU1576I

This message indicates that tracing was halted because of the failure indicated by message ISU1577I.

ISU1577I

errno is the value of the C symbolic expression, errno, which is set by the C runtime library. Its value is defined in the C library header file ERRNO.H.

System Action: Processing continues, but tracing is stopped.

Operator Response: Save the system log with the reported *errno* value.

Programmer Response: Look up the *errno* value reported in this message in the ERRNO.H file. The *z/OS C/C++ Run-Time Library Reference* lists this file in its appendix. Correct the underlying problem. For many trace problems, tracing can be resumed by issuing an ISTSKTRC RESET command and starting the trace. Consult the *z/OS Communications Server: AnyNet Sockets over SNA* for instructions on resetting and starting the trace. Certain problems may require that you stop and restart Sockets over SNA.

ISU1578I ERROR OPENING TRACE DATA SET - ERRNO *errno*

Explanation: This message is issued in a message group when Sockets over SNA cannot open a trace data set. A complete description of the message group follows:

```
ISU1500I SOCKETS-OVER-SNA JOB: jobname APPLID: applid
ISU1578I ERROR OPENING TRACE DATA SET - ERRNO errno
ISU1576I TRACING DISABLED
ISU1516I END OF SOCKETS-OVER-SNA MESSAGE GROUP
```

ISU1500I

jobname is the name of the job used to start sockets-over-SNA.

applid is the application identifier used to open the sockets-over-SNA ACB. ***N/A*** is displayed if the application identifier is not known.

ISU1576I

This message indicates that tracing was halted because of the failure indicated by message ISU1578I.

ISU1578I

errno is the value of the C symbolic expression, errno, which is set by the C runtime library. Its value is defined in the C library header file ERRNO.H.

System Action: Processing continues, but tracing is stopped.

Operator Response: Save the system log with the reported *errno* value.

Programmer Response: Look up the *errno* value reported in this message in the ERRNO.H file. *C/C++ for MVS/ESA Library Reference* lists this file in its appendix. Correct the underlying problem. For many trace problems, tracing can be resumed by issuing an ISTSKTRC RESET command and starting the trace. Consult the *z/OS Communications Server: AnyNet Sockets over SNA* for instructions on resetting and starting the trace. Certain problems may require that you stop and restart Sockets over SNA.

ISU1579I INITIALIZATION FAILED - UNABLE TO LOAD *module*

Explanation: This message is part of a group of messages that Sockets over SNA issues when initialization failed because Sockets over SNA was unable to load the module containing sockets-over-SNA message texts. A complete description of the message group follows:

```
ISU1538I  SOCKETS-OVER-SNA MESSAGE GROUP: jobname
ISU1579I  INITIALIZATION FAILED - UNABLE TO LOAD module
ISU1516I  END OF SOCKETS-OVER-SNA MESSAGE GROUP
```

ISU1538I

jobname is the name of the job used to start Sockets over SNA.

ISU1579I

module is the name of the load module that could not be loaded.

System Action: Sockets over SNA halts.

Operator Response: Save the system log for problem determination.

Programmer Response: Verify that *module* has been installed in SYS1.VTAMLIB, and that SYS1.VTAMLIB is part of the STEPLIB concatenation for the sockets-over-SNA job. Correct the problem and restart Sockets over SNA.

ISU1580I INITIALIZATION FAILED: *reason*

Explanation: Sockets over SNA issues this message when initialization fails. The *reason* text explains why initialization failed.

reason may be one of the following:

ALREADY ACTIVE
Sockets over SNA could not initialize because it is already active.

OUT OF STORAGE
Sockets over SNA could not initialize because storage could not be allocated.

PFS NOT INITIALIZED
Sockets over SNA could not initialize because the sockets-over-SNA physical file system (PFS) did not initialize during initial program load (IPL).

System Action: Sockets over SNA is not initialized.

Operator Response:

- If *reason* is **ALREADY ACTIVE**, display the active tasks in the system and verify that Sockets over SNA is already active.
- For all other values of *reason*, notify the system programmer.

Programmer Response:

- If *reason* is **OUT OF STORAGE**, increase the region size for Sockets over SNA.
- When *reason* is **PFS NOT INITIALIZED**, the z/OS UNIX configuration must be modified to initialize the sockets-over-SNA physical file system (PFS) during initial program load (IPL). Refer to *z/OS Communications Server: AnyNet Sockets over SNA* and *Planning: OpenEdition MVS* for more information.

ISU1581I THREAD *thread_identifier* **DETECTED A SEVERE ERROR**

Explanation: This message is part of a group of messages that Sockets over SNA issues when an internal error occurs in Sockets over SNA. A complete description of the message group follows:

```
 ISU1538I SOCKETS-OVER-SNA MESSAGE GROUP: jobname
 ISU1581I THREAD thread_identifier DETECTED A SEVERE ERROR
[ISU1576I  TRACING DISABLED]
 ISU1516I END OF SOCKETS-OVER-SNA MESSAGE GROUP
```

ISU1538I

jobname is the name of the job used to start sockets-over-SNA.

ISU1581I

thread_identifier identifies the thread that was executing when the error occurred.

This information can be correlated with traces and dumps to determine what processing was occurring when the error was detected.

ISU1576I

This message indicates that tracing was halted because of the failure indicated by message ISU1581I.

System Action: The system creates a dump. Processing continues unless Sockets-over-SNA determines that more abends have occurred than Sockets-over-SNA can recover from. If that is the case, Sockets-over-SNA will terminate. If message ISU1576I is issued, the Sockets-over-SNA trace is stopped.

Operator Response: Save the system log and the dump produced by Sockets over SNA.

Programmer Response: You can use the *thread_identifier* in message ISU1581I with the dump and traces produced to determine what was occurring when the error was detected. If you cannot determine the cause of the problem from the output provided, take the following actions:

- If you access to the IBMLink, search for known problems in this area. If no applicable matches are found, report the problem to IBM by using the Electronic Technical Report (ETR) option on IBMLink.
- If you do no have access to IBMLink, report the problem to the IBM software support center.

ISU1582I SOCKETS-OVER-SNA TRACING TO *ddname*

Explanation: This message is issued when sockets-over-SNA opens a trace DDNAME. This happens when sockets-over-SNA tracing is activated and when sockets-over-SNA opens a new DDNAME because the DDNAME in an earlier ISU1582I message is full.

ddname is the DDNAME where the trace data will be recorded. When not writing data to standard output, *ddname* is of the form DD:ddname. A value of STDOUT indicates that the trace data will be written to the job stream standard output.

System Action: The sockets-over-SNA trace is active and is writing data to the indicated DDNAME.

Operator Response: None.

Programmer Response: None.

ISU1583I ERROR OPENING TRACE *ddname* **- FORMAT NOT VALID**

Explanation: This message is issued when there is an error opening the sockets-over-SNA trace dataset.

ddname is the DDNAME of the trace dataset in the form DD:ddname.

System Action: Processing continues.

If this is the only trace dataset defined, tracing will be deactivated. If this is one of several trace datasets that have been defined to sockets-over-SNA, sockets-over-SNA will skip this DDNAME and attempt to open the next DDNAME in the sequence.

Operator Response: Save the system log for problem determination.

Programmer Response: The trace dataset associated with *ddname* probably has incorrect characteristics. Ensure that the dataset has a fixed record length of 150 or greater, or that it is HFS file in a writable directory.

Chapter 11. IUT messages for VTAM network operators

This chapter lists the VTAM messages beginning with IUT that can appear on a network operator's console.

See Appendix E, "Message text for VTAM operator messages" on page 769 for a list of the text of all VTAM operator messages.

IUT5000I *trlename* **STILL ACTIVE: VTAM TERMINATION WAITING FOR** *ulpid*

Explanation: VTAM issues this message when VTAM termination processing is waiting for the deactivation of a service access point (SAP).

System Action: VTAM termination waits until all SAPs have been deactivated. VTAM will periodically reissue this message as long as the *trlename* remains active.

ulpid is the SAP owner.

trlename is the name of the TRLE being used by the *ulpid*.

Operator Response: For the VTAM HALT command (without QUICK OR CANCEL), have the *trlename* deactivated by the owning program named in *ulpid*.

Programmer Response: None.

IUT5001I VTAM MPC CONNECTION MANAGER PROCESSING TERMINATED

Explanation: VTAM issues this message when VTAM MPC connection manager processing has terminated. This message is issued during VTAM HALT command processing.

System Action: VTAM MPC connection manager functions are no longer available.

Operator Response: None.

Programmer Response: None.

IUT5002I TASK FOR ULPID *ulpid* **USING TRLE** *trlename* **TERMINATING**

Explanation: VTAM issues this message when a z/OS CS upper layer protocol (ULP) task or memory terminates and causes VTAM to deactivate the ULP's service access point (SAP).

ulpid is the SAP owner.

trlename is the name of the TRLE being used by *ulpid*.

System Action: VTAM deactivates all ULP SAPs associated with the terminating task.

When this is the last or only ULP SAP using this data link control (DLC), VTAM also deactivates the DLC associated with the *trlename* and deallocates the corresponding I/O devices.

Operator Response: To determine the status or progress of SAP termination, issue a DISPLAY TRL command and determine the status of each I/O device.

Programmer Response: None.

© Copyright IBM Corp. 1984, 2002

Chapter 12. IVT messages for VTAM network operators

This chapter lists the VTAM messages beginning with IVT that can appear on a network operator's console.

See Appendix E, "Message text for VTAM operator messages" on page 769 for a list of the text of all VTAM operator messages.

IVT5501I CSM PARMLIB MEMBER *membername* **NOT FOUND - DEFAULT VALUES USED**

Explanation: This message is issued during CSM initialization.

membername is the name of the CSM parmlib member.

System Action: The default values for fixed storage (100M) and ECSA storage (10M) are used. Processing continues.

Operator Response: If the default values for CSM storage limits are not acceptable, issue the MODIFY CSM command to update the parameter values.

Programmer Response: None.

IVT5502I READ ERROR ON PARMLIB MEMBER *membername* **- DEFAULT VALUES USED**

Explanation: An I/O error occurred while CSM was trying to read the CSM parmlib member. This message is issued during CSM initialization.

membername is the name of the CSM parmlib member.

System Action: The default value for fixed storage (100M) and ECSA storage (10M) is used. Processing continues.

Operator Response: If the default values for CSM storage limits are not acceptable, issue the MODIFY CSM command to update the parameter values. Save the system log for problem determination.

Programmer Response: See *z/OS Communications Server: SNA Diagnosis Vol 1, Techniques and Procedures* for more information.

IVT5503I CSM PARMLIB PARAMETER NOT VALID - *parametername*

Explanation: CSM issues this message as part of a message group. See the explanation for message IVT5507I for a complete description.

IVT5504I ABEND *abendcode* **OCCURRED IN** *modulename* **- SDUMP HAS BEEN ISSUED**

Explanation: An abend occurred while processing a CSM request.

abendcode is the abend code. The values for *abendcode* are found in the applicable operating system documentation.

modulename is the name of the CSM module.

System Action: The system attempts an SDUMP. CSM takes the dump if the system dump data set is usable. If the dump fails, message IVT5505I is issued with a return code of the dump request.

Operator Response: Save the system log and the dump for problem determination.

Programmer Response: Review the dump to determine the cause of the problem.

IVT5505I CSM SDUMP FAILED WITH RETURN CODE *code* **REASON X'***reason***'**

Explanation: CSM attempts an SDUMP for an abend and the system could not complete the dump successfully.

code indicates the reason for the failure and can be one of the following:

04 The system obtained only a partial dump. The dump data set or file is too small.

© Copyright IBM Corp. 1984, 2002

08 The system was unable to take an SDUMP. All dump data sets or files are full, a dump is already in progress, or the dump analysis elimination (DAE) function of MVS has determined that a dump has already been taken for the system string.

reason indicates the cause of the SDUMP failure.

For more information about return and reason codes for the SDUMP macro, see *z/OS MVS Programming: Authorized Assembler Services Reference LLA-SDU*.

System Action: CSM takes no further action to obtain a dump. Other processing continues.

Operator Response: Save the system log for problem determination.

Programmer Response: If *code* is **4**, increase the size of the dump dataset.

If *code* is **8**, check the availability of dump data sets and purge any unnecessary dumps.

IVT5506I *modulename* **STORAGE ALLOCATION FAILED IN CSM**

Explanation: This message is issued when CSM is unable to satisfy a request for storage.

modulename is the CSM module name where the request failed.

System Action: CSM might not be able to continue. If this message is issued during CSM initialization, CSM issues abend code 4C4, return code 1001, and issues an FFST dump.

Operator Response: Save the system log for problem determination.

Programmer Response: See *z/OS Communications Server: SNA Diagnosis Vol 1, Techniques and Procedures* for more information.

IVT5507I **CSM PARMLIB INFORMATION FOUND IN MEMBER** *membername*

Explanation: This message is part of a group of messages that is issued either during CSM initialization or as the result of a MODIFY CSM command with no parameters specified. A complete description of the message group follows:

```
 IVT5507I CSM PARMLIB INFORMATION FOUND IN MEMBER membername
[IVT5503I CSM PARMLIB PARAMETER NOT VALID - parametername]
[IVT5599I END]
```

IVT5507I

membername is the name of the CSM parmlib member.

IVT5503I

CSM issues this message when it finds a CSM storage parameter value in the parmlib that is not valid.

parametername is the first 26 characters of the line where the error occurred in the CSM parmlib member.

System Action: If only IVT5507I is displayed, CSM storage limits from *membername* are used.

If IVT5503I is displayed in response to MODIFY CSM command with no parameters specified, the storage limits are unchanged.

If IVT5503I is displayed during CSM initialization, then storage limits are determined as follows:

- If the error was generated by the first CSM storage parameter, the default values for fixed storage (100M) and ECSA storage (10M) are used.
- If the error was generated by the second CSM storage parameter, only the second parameter value is replaced by the default.

Operator Response: If IVT5503I is displayed and the default values for CSM storage parameters are not acceptable, issue the MODIFY CSM command to update CSM start parameters. Save the system log for the problem determination.

Programmer Response: If IVT5503I is displayed, edit the CSM paramater data set and correct the parameter that is in error.

IVT5508I DISPLAY ACCEPTED

Explanation: CSM accepted the DISPLAY CSM command for initial processing.

System Action: The syntax of the command is correct and VTAM begins processing the DISPLAY CSM command.

Operator Response: None.

Programmer Response: None.

IVT5510I MODIFY ACCEPTED

Explanation: CSM accepted the MODIFY CSM command for initial processing.

System Action: The syntax of the command is correct and VTAM begins processing the MODIFY CSM command.

Operator Response: None.

Programmer Response: None.

IVT5511I *command* **CSM COMMAND SYNTAX NOT VALID**

Explanation: The *command* failed because of one or more of the following syntax errors:
- An operand is specified incorrectly
- A operand is specified more than once
- A keyword may be missing.

command is one of the following CSM command types:
- **DISPLAY**
- **MODIFY**

System Action: VTAM rejects the command. Other processing continues.

Operator Response: Reenter the command with the correct syntax. See *z/OS Communications Server: SNA Operation* for correct command syntax.

Programmer Response: None.

IVT5512I FIXED PARAMETER VALUE NOT VALID

Explanation: This message is issued when the FIXED value of a MODIFY CSM command is out of range or not valid.

System Action: Processing continues. CSM fixed storage limits are not changed.

Operator Response: Reenter the command with the correct syntax. See *z/OS Communications Server: SNA Operation* for correct command syntax.

Programmer Response: None.

IVT5513I ECSA PARAMETER VALUE NOT VALID

Explanation: This message is issued when the requested ECSA value of a MODIFY CSM command is out of range or not valid.

System Action: Processing continues. CSM ECSA storage limits are not changed.

Operator Response: Reenter the command with the correct syntax. See *z/OS Communications Server: SNA Operation* for correct command syntax.

Programmer Response: None.

IVT5516I ERROR OBTAINING CSM PARMLIB INFORMATION - LIMITS UNCHANGED

Explanation: This message is issued in response to a MODIFY CSM command with no operands specified. CSM could not read the storage limits defined in the CSM parmlib member and could not change the limits.

System Action: Processing continues. CSM storage limits are not changed.

Operator Response: To change the current storage limits, reissue the command and specify new storage limits on the FIXED or ECSA operands.

Programmer Response: Edit the CSM parmlib member to determine the source of the problem.

IVT5517I CSM LIMITS PRIOR TO MODIFY CSM PROCESSING:

Explanation: This message is the first in a group of messages that is issued in response to a MODIFY CSM command with at least one operand specified. It displays the CSM storage limits before and after the MODIFY CSM command is issued. A complete description of the message group follows:

```
IVT5517I CSM LIMITS PRIOR TO MODIFY CSM PROCESSING:
IVT5519I ECSA MAXIMUM = maxecsa, FIXED MAXIMUM = maxfix
IVT5518I CSM LIMITS AFTER MODIFY CSM PROCESSING:
IVT5519I ECSA MAXIMUM = maxecsa, FIXED MAXIMUM = maxfix
IVT5599I END
```

IVT5517I and IVT5518I

These are header messages for the information displayed in the message that follows.

IST5519I

maxecsa is the maximum amount of ECSA storage, in megabytes (M) or kilobytes (K), that can be allocated by CSM.

maxfix is the maximum amount of fixed storage, in megabytes (M) or kilobytes (K), that can be allocated by CSM.

System Action: Processing continues.

Operator Response: None.

Programmer Response: None.

IVT5518I CSM LIMITS AFTER MODIFY CSM PROCESSING:

Explanation: CSM issues this message as part of a message group. See the explanation for message IVT5517I for a complete description.

IVT5519I ECSA MAXIMUM = *maxecsa* **FIXED MAXIMUM =** *maxfix*

Explanation: CSM issues this message as part of a message group. See the explanation for message IVT5517I for a complete description.

IVT5520I OWNERID VALUE NOT VALID

Explanation: This message is issued when a DISPLAY CSM command is issued with an OWNERID that is not a valid address space identifier (ASID).

System Action: VTAM rejects the command. Other processing continues.

Operator Response: Issue a display of all active jobs to obtain a list of valid ASIDs.

Programmer Response: None.

IVT5521I NO CSM STORAGE IS CURRENTLY ALLOCATED TO OWNERID *asid*

Explanation: This message is issued for a DISPLAY CSM command with OWNERID specified.

If *asid* is the name of a valid address space, the ASID exists, but does not have any storage allocated from the communications storage manager (CSM).

If *asid* is ALL, there is no CSM storage allocated to any address space.

System Action: Processing continues.

Operator Response: To determine the ASID that has storage allocated in CSM, reissue the DISPLAY CSM command and specify OWNERID=ALL.

Programmer Response: None.

IVT5529I PROCESSING DISPLAY CSM COMMAND - OWNERID NOT SPECIFIED

Explanation: This message is the first in a group of messages that CSM issues in response to a DISPLAY CSM command when OWNERID is not specified. A complete description of the message group follows.

```
IVT5529I PROCESSING DISPLAY CSM COMMAND - OWNERID NOT SPECIFIED
IVT5530I BUFFER BUFFER
IVT5531I SIZE   SOURCE                INUSE      FREE     TOTAL
IVT5532I -------------------------------------------------------
IVT5533I    4K  ECSA                     0M      256K      256K
IVT5533I   16K  ECSA                     0M        0M        0M
IVT5533I   32K  ECSA                     0M        0M        0M
IVT5533I   60K  ECSA                     0M        0M        0M
IVT5534I  180K  ECSA                 POOL DOES NOT EXIST
IVT5535I  TOTAL ECSA                     0M      256K      256K
IVT5532I -------------------------------------------------------
IVT5533I    4K  DATA SPACE 31            0M      256K      256K
IVT5533I   16K  DATA SPACE 31            0M        0M        0M
IVT5533I   32K  DATA SPACE 31            0M        0M        0M
IVT5533I   60K  DATA SPACE 31            0M        0M        0M
IVT5534I  180K  DATA SPACE 31         POOL DOES NOT EXIST
IVT5535I  TOTAL DATA SPACE 31            0M      256K      256K
IVT5532I -------------------------------------------------------
IVT5533I    4K  DATA SPACE 64            0M      256K      256K
IVT5533I   16K  DATA SPACE 64            0M        0M        0M
IVT5533I   32K  DATA SPACE 64            0M        0M        0M
IVT5533I   60K  DATA SPACE 64            0M        0M        0M
IVT5534I  180K  DATA SPACE 64         POOL DOES NOT EXIST
IVT5535I TOTAL  DATA SPACE 64            0M      256K      256K
IVT5532I -------------------------------------------------------
IVT5535I TOTAL  DATA SPACE               0M      512K      512K
IVT5532I -------------------------------------------------------
IVT5536I TOTAL  ALL SOURCES              0M      768K      768K
IVT5538I FIXED MAXIMUM =      100M    FIXED CURRENT =      400K
IVT5541I FIXED MAXIMUM USED =      400K
IVT5539I ECSA  MAXIMUM =      100M    ECSA  CURRENT =      414K
IVT5541I ECSA  MAXIMUM USED =      414K
IVT5559I CSM DATA SPACE 1 NAME: CSM64001
IVT5559I CSM DATA SPACE 2 NAME: CSM31002
IVT5599I END
```

Note: To determine the actual number of buffers in use for a pool, divide *curused* by *bufsiz*.

IVT5529I

The message group that follows this message displays storage information for every possible combination of CSM buffer size and buffer source.

IVT5530I and IVT5531I

These messages are header messages for the information displayed in the messages that follow.

IVT5529I

IVT5533I

This message displays information about a CSM pool.

bufsiz is the size of the buffers in the pool. The values for *bufsiz* are 4K, 16K, 32K, 60K, and 180K.

bufsource is the storage source from which buffers are allocated. The values for *bufsource* are:

ECSA
Buffers are allocated from ECSA storage.

DATA SPACE 31
Buffers are allocated from 31-bit backed data space storage.

DATA SPACE 64
Buffers are allocated from 64-bit backed data space storage.

curused is the amount of storage in the pool that is currently being used. The value is expressed in either megabytes (M) or kilobytes (K).

Note: When a problem with a pool extent is detected, this value may include buffer storage that is not actually allocated to a CSM user. The buffer storage in the extent can not be allocated to a CSM user.

curfree is the amount of storage in the pool that is not being used. The value is expressed in either megabytes (M) or kilobytes (K).

curtotal is the total amount of storage allocated for the pool. The value is expressed in either megabytes (M) or kilobytes (K).

IVT5534I

This message is displayed only when the pool represented by *bufsiz* and *bufsource* has not been created.

IVT5535I

This message displays the total storage allocated for all CSM pools of a particular buffer source.

bufsource is the storage source from which buffers are allocated. The values for *bufsource* are **ECSA**, **DATA SPACE 31**, **DATA SPACE 64**, and **DATA SPACE**.

totused is the total amount of storage that is currently being used for *bufsource*.

totfree is the total amount of storage that is not being used for *bufsource*.

totstor is the total amount of storage allocated for all of the CSM *bufsource* pools.

IVT5536I

This message displays information about all storage allocated for the CSM Pools.

totused is the total amount of CSM storage that is currently being used.

totfree is the total amount of CSM storage that is not being used.

totstor is the total amount of storage allocated for the CSM pools.

IVT5538I

maxfix is the maximum amount of fixed storage that can be allocated by CSM.

curfix is the current amount of fixed storage allocated by CSM.

IVT5539I
maxecsa is the maximum amount of ECSA storage that can be allocated by CSM.
curecsa is the current amount of ECSA storage allocated by CSM.

IVT5541I

storage_type can be one of the following:

ECSA Common Storage Area.

FIXED Page Fixed Storage includes ECSA and 31-bit and 64-bit backed Data Space.

storage_value is the maximum amount of storage in use since the last time a Display CSM command was issued with OWNERID not specified.

IVT5559I

This message is displayed for each CSM data space that exists. CSM can create up to five data spaces.

n is CSM data space number.

datspname is CSM data space name.

System Action: Processing continues.

Operator Response: None.

Programmer Response: None.

IVT5530I BUFFER BUFFER

Explanation: CSM issues this message as part of a message group. The first message in the group is IVT5529I. See the explanation of that message for a complete description.

IVT5531I SIZE SOURCE INUSE FREE TOTAL

Explanation: CSM issues this message as part of a message group. The first message in the group is IVT5529I. See the explanation of that message for a complete description.

IVT5532I ----------

Explanation: This message is a line separator and is part of several different message groups. It is used to improve readability or to separate types of information. See the explanation of the first message in the group for an example of how this message is used in each group.

IVT5533I *bufsiz bufsource curused curfree curtotal*

Explanation: CSM issues this message as part of a message group. The first message in the group is IVT5529I. See the explanation of that message for a complete description.

IVT5534I *bufsiz bufsource* **POOL DOES NOT EXIST**

Explanation: CSM issues this message as part of a message group. The first message in the group is IVT5529I. See the explanation of that message for a complete description.

IVT5535I TOTAL *bufsource totused totfree totstor*

Explanation: CSM issues this message as part of a message group. The first message in the group is IVT5529I. See the explanation of that message for a complete description.

IVT5536I TOTAL ALL SOURCES *totused totfree totstor*

Explanation: CSM issues this message as part of a message group. The first message in the group is IVT5529I. See the explanation of that message for a complete description.

IVT5538I FIXED MAXIMUM = *maxfix* **FIXED CURRENT =** *curfix*

Explanation: CSM issues this message as part of a message group. The first message in the group is IVT5529I. See the explanation of that message for a complete description.

IVT5539I ECSA MAXIMUM = *maxecsa* **ECSA CURRENT =** *curecsa*

Explanation: CSM issues this message as part of a message group. The first message in the group is IVT5529I. See the explanation of that message for a complete description.

IVT5541I *storage_type* **MAXIMUM USED** *storage_value*

Explanation: CSM issues this message as part of a message group. The first message in the group is IVT5529I. See the explanation of that message for a complete description.

IVT5549I PROCESSING DISPLAY CSM COMMAND - OWNERID SPECIFIED

Explanation: This message is the first in a group of messages that CSM issues in response to a DISPLAY CSM command when OWNERID is specified. A complete description of the message group follows.

```
IVT5508I DISPLAY ACCEPTED
IVT5549I PROCESSING DISPLAY CSM COMMAND - OWNERID SPECIFIED
IVT5530I BUFFER BUFFER
IVT5551I SIZE   SOURCE             STORAGE ALLOCATED TO OWNER
IVT5532I -------------------------------------------------------
IVT5553I    4K  ECSA                            256K
IVT5554I TOTAL  ECSA                            256K
IVT5532I -------------------------------------------------------
IVT5553I    4K  DATA SPACE 64                   128K
IVT5554I TOTAL  DATA SPACE 64                   128K
IVT5532I -------------------------------------------------------
IVT5554I TOTAL  DATA SPACE                      128K
IVT5532I -------------------------------------------------------
IVT5556I TOTAL  FOR OWNERID                     384K
IVT5557I OWNERID: ASID = 01F6  JOBNAME = VTAMAPPL
IVT5599I END
```

IVT5549I

This message group displays information about CSM buffers and storage that belong to the OWNERID.

IVT5530I and IVT5551I

These are header messages for the information displayed in the messages that follow.

IVT5553I

This message displays information about storage allocated to the OWNERID from a CSM buffer pool.

bufsiz is the size of the buffers in the pool. The values for *bufsiz* are 4K, 16K, 32K, 60K, and 180K.

bufsource is the storage source from which buffers are allocated. The values for *bufsource* are:

ECSA
buffers are allocated from ECSA storage.

DATA SPACE 31
buffers are allocated from 31-bit backed data space storage.

DATA SPACE 64
buffers are allocated from 64-bit backed data space storage.

totstor is the total amount of CSM storage in the pool that has been allocated to the ASID. The value is expressed in either megabytes (M) or kilobytes (K).

IVT5554I

This message displays information about all the CSM storage allocated to the ASID for *bufsource*.

bufsource is the storage source from which buffers are allocated. The values for *bufsource* are **ECSA**, **DATA SPACE 31**, **DATA SPACE 64**, and **DATA SPACE**.

totstor is the total amount of storage allocated to this ASID for *bufsource*. The value is expressed in either megabytes (M) or kilobytes (K).

IVT5556I

totstor is the total amount of CSM storage allocated to the ASID. The value is expressed in either megabytes (M) or kilobytes (K).

Note: The sum of the total of the storage allocated to all users of a pool may be greater than the total amount of storage allocated from the pool. This is due to multiple owners of a buffer resulting from the creation of shared instances using IVTCSM ASSIGN_BUFFER request. The information by OWNERID indicates the amount of storage that must be freed by the user to enable the storage to be returned to the buffer pool.

IVT5557I

asid is the address space identifier (ASID) of the owner of the CSM storage, as specified on the OWNERID operand of the DISPLAY CSM command or on an IVTCSM GET_BUFFER, ASSIGN_BUFFER or CHANGE_OWNER request.

jobname is the name of the job associated with the ASID. If *jobname* cannot be determined, this field contains *****NA*****.

System Action: Processing continues.

Operator Response: None.

Programmer Response: None.

IVT5551I SIZE SOURCE STORAGE ALLOCATED TO OWNER

Explanation: CSM issues this message as part of a message group. The first message in the group is IVT5549I. See the explanation of that message for a complete description.

IVT5553I *bufsiz bufsource totstor*

Explanation: CSM issues this message as part of a message group. The first message in the group is IVT5549I. See the explanation of that message for a complete description.

IVT5554I TOTAL *bufsource totstor*

Explanation: CSM issues this message as part of a message group. The first message in the group is IVT5549I. See the explanation of that message for a complete description.

IVT5556I TOTAL FOR OWNERID *totstor*

Explanation: CSM issues this message as part of a message group. The first message in the group is IVT5549I. See the explanation of that message for a complete description.

IVT5557I OWNERID: ASID = *asid* **JOBNAME =** *jobname*

Explanation: CSM issues this message as part of a message group. The first message in the group is IVT5549I. See the explanation of that message for a complete description.

IVT5558I *bufsiz bufsource* **UNABLE TO DETERMINE BUFFER VALUES**

Explanation: This message is displayed only when CSM detects a problem in a pool which prevents information about the buffer from being determined.

IVT5559I CSM DATA SPACE *n* **NAME:** *datspname*

Explanation: CSM issues this message as part of a message group. The first message in the group is IVT5529I. See the explanation of that message for a complete description.

System Action: None.

Operator Response: None.

Programmer Response: None.

IVT5560I CSM ECSA STORAGE LIMIT EXCEEDED

Explanation: A CSM request for storage from extended common service area (ECSA) storage could not be satisfied. It would exceed the CSM ECSA storage limit value.

System Action: The action depends on why the requested storage was needed. Other messages might follow identifying the effect this storage condition has on CSM and its applications. Subsequent requests for CSM storage may fail.

Operator Response: Enter the DISPLAY CSM command without the OWNERID operand to determine current storage limits and usage. Issue a DISPLAY CSM command with OWNERID=ALL to determine how much storage is in use by each application. Save the system log and request a dump for problem determination.

Programmer Response: Verify the ECSA storage limit value is correct. Increase storage as required using a MODIFY CSM command.

See *z/OS Communications Server: SNA Operation* for more information on the DISPLAY CSM and MODIFY CSM commands.

See *z/OS Communications Server: SNA Diagnosis Vol 2, FFST Dumps and the VIT* for information about analyzing dumps.

IVT5561I CSM FIXED STORAGE LIMIT EXCEEDED

Explanation: A CSM request for storage from the fixed (REAL) storage could not be satisfied. It would exceed the CSM FIXED storage limit value.

System Action: The action depends on how much storage is available for subsequent requests for storage. Other messages might follow identifying the effect this storage condition has on CSM and its applications. Subsequent requests for CSM storage may fail.

Operator Response: Enter the DISPLAY CSM command without the OWNERID operand to determine current storage limits and usage. Issue a DISPLAY CSM command with OWNERID=ALL to determine how much storage is in use by each application. Save the system log and request a dump for problem determination.

Programmer Response: Verify the FIXED storage limit value is correct. Increase storage as required using a MODIFY CSM command.

See *z/OS Communications Server: SNA Operation* for more information on the DISPLAY CSM and MODIFY CSM commands.

See *z/OS Communications Server: SNA Diagnosis Vol 2, FFST Dumps and the VIT* for information about analyzing dumps.

IVT5562I CSM ECSA STORAGE AT CRITICAL LEVEL

Explanation: This message is issued when CSM ECSA storage usage is at or higher than the CSM ECSA critical value (97% of CSM ECSA storage limit value).

System Action: Processing continues. Subsequent requests for CSM storage may fail.

Operator Response: Enter the DISPLAY CSM command without the OWNERID operand to determine current storage limits and usage. Issue a DISPLAY CSM command with OWNERID=ALL to determine how much storage is in use by each application. Save the system log for the problem determination.

Programmer Response: Verify the ECSA storage limit value is correct. Increase storage as required using a MODIFY CSM command.

See *z/OS Communications Server: SNA Operation* for more information on the DISPLAY CSM and MODIFY CSM commands.

IVT5563I CSM FIXED STORAGE AT CRITICAL LEVEL

Explanation: This message is issued when CSM fixed storage usage is at or higher than the CSM fixed critical value (97% of CSM fixed storage limit value).

System Action: Processing continues. Subsequent requests for storage may fail.

Operator Response: Enter the DISPLAY CSM command without the OWNERID operand to determine current storage limits and usage. Issue a DISPLAY CSM command with OWNERID=ALL to determine how much storage is in use by each application. Save the system log for the problem determination.

Programmer Response: Verify the fixed storage limit value is correct. Increase storage as required using a MODIFY CSM command.

See *z/OS Communications Server: SNA Operation* for more information on the DISPLAY CSM and MODIFY CSM commands.

IVT5564I CSM ECSA STORAGE SHORTAGE RELIEVED

Explanation: This message is issued when CSM ECSA storage usage has returned back to normal level (at or below 85% of ECSA storage limit value).

System Action: Processing continues.

Operator Response: None.

Programmer Response: None.

IVT5565I CSM FIXED STORAGE SHORTAGE RELIEVED

Explanation: This message is issued when CSM fixed storage usage has returned to normal level (at or below 85% of fixed storage limit value).

System Action: Processing continues.

Operator Response: None.

Programmer Response: None.

IVT5599I END

Explanation: This message marks the end of a message group. See previous messages in the group for more information.

System Action: Processing continues.

Operator Response: None.

Programmer Response: None.

IVT5600I PROBE *probname* **ATTEMPTED - FFST NOT AVAILABLE**

Explanation: CSM encountered an anomaly and attempted to execute the FFST probe. FFST was not active or available to service the probe request. CSM handled the request by furnishing the identification of the probe.

probname is the name of the probe.

System Action: CSM processing continues.

Operator Response: Save the System Log for problem determination.

Programmer Response: Determine why FFST was not active or available, then start FFST. Refer to the *z/OS Communications Server: SNA Diagnosis Vol 2, FFST Dumps and the VIT* to determine the anomaly encountered.

IVT5602I DATA SPACE SDUMPX FAILED WITH RETURN CODE *code* **REASON** *reason*

Explanation: CSM attempted an SDUMPX for the VIT data space during a FFST mini dump. The system could not complete the dump successfully.

code indicates the return code received from MVS SDUMPX and may be one of the following:

4 The system obtained only a partial dump. The dump data set or file may be too small. *reason* will be X'00'.

8 The system was unable to schedule a dump.

reason is a hexadecimal code indicating the cause of the SDUMPX failure.

System Action: The system was unable to schedule a dump.

Operator Response: Save the system log for problem determination.

Programmer Response: If *code* is **4**, look for system message IEA911I, which contains reason codes that explain why the system could not execute the dump. Message IEA911I is documented in the *z/OS MVS System Messages, Vol 6 (GOS-IEA)*.

If *code* is **8**, refer to the specific reason code to determine the required action. Refer to the *z/OS MVS Programming: Authorized Assembler Services Reference LLA-SDU* for more information about SDUMPX Return and Reason Codes.

Chapter 13. USS messages

This chapter provides information on unformatted system services (USS) messages that are sent to the VTAM operator or a program operator, and USS messages that are sent to terminal users. For information on translating USS messages, see "User-selected message changes" on page 5.

See the *z/OS Communications Server: SNA Resource Definition Reference* for additional information.

USS messages sent to the VTAM operator or a program operator

The operation-level USS table contains definitions for USS messages that are sent to the VTAM operator or a program operator. These USS messages and their VTAM message equivalents are:

USS message number	VTAM operator message
0	IST457I
1	IST450I
2	IST451I
3	IST452I
4	IST453I
6	IST792I
8	IST454I
11	IST455I
12	IST456I
14	IST458I

See Chapter 5, "IST messages for VTAM network operators IST001I – IST399I" on page 33 for a description of the VTAM operator messages listed in the preceding chart.

USS messages sent to terminal users

The session-level USS table contains definitions for USS messages that are sent to terminal users. These messages consist of USSMSG00 through USSMSG14. VTAM issues these messages in response to commands sent by logical units (for example, a character-coded logon or logoff command).

The USS messages are described in the following section as they are defined in the IBM-supplied session-level USS table, ISTINCDT.

You can also define two messages of your own.

USSMSG00
The text you define for this message is issued after VTAM has accepted a USS command from a terminal user.

USSMSG10
The text you define for this message is issued after a logical unit is activated.

© Copyright IBM Corp. 1984, 2002

Note: For a BSC 3275 terminal, the following messages are not printed on the attached terminal. The message only appears on a 3275 display screen.

USSMSG00 (user-defined message)

Explanation: You can define this message (with the USSMSG macro) to be issued after VTAM has accepted a USS command from a terminal user. See the *z/OS Communications Server: SNA Resource Definition Reference* for more information on the USSMSG macro.

System Action: Processing continues.

User Response: None.

USSMSG01 INVALID *command* **COMMAND SYNTAX**

Explanation: The syntax of the entered command *command* is not valid. If the command cannot be determined, the *command* portion of the message is null.

System Action: The command is not executed.

User Response: Reenter the command with corrected syntax.

USSMSG02 *command* **COMMAND UNRECOGNIZED**

Explanation: Command *command* with parameter *parameter* is not supported.

System Action: The command is not executed.

User Response: Enter the desired command correctly.

USSMSG03 *parameter* **PARAMETER EXTRANEOUS**

Explanation: An extraneous parameter *parameter* has been specified for a USS command.

Notes:

1. Parameters on USS commands are not processed in the order they are provided in the command.
2. All positional parameters in a command that occur before the first positional keyword parameter will be labeled **P***x*, starting with **P1**.

System Action: The command is not executed.

User Response: Correct and reenter the command.

USSMSG04 *parameter* **PARAMETER VALUE** *value* **NOT VALID**

Explanation: The parameter *parameter* has been specified with an invalid value. For example, if *parameter* is a logon mode entry name (LOGMODE), the name may be undefined in the logical unit's logon mode table.

System Action: The command is not executed.

User Response: Correct and reenter the command.

USSMSG05 UNSUPPORTED FUNCTION

Explanation: The logical unit sent a command to VTAM improperly. If SSCPFM=USS3270 is specified for a logical unit, the logical unit can enter input using the ENTER key, the CLEAR key, the System Request key, or a magnetic card reader. If SSCPFM=USSSCS is specified for a logical unit, the logical unit must not issue a Clear, Cancel, or Signal request, and it cannot send a zero-length command. All logical units must send the character-coded command as a single-request chain.

System Action: The command is not executed.

User Response: Reenter the command. Some of the invalid commands mentioned above are sent when program function (PF) keys are pressed. Terminal users should avoid pressing these keys.

USSMSG06 SEQUENCE ERROR

Explanation: A USS command was entered at the wrong time. Either a USS command was issued before the processing of a prior USS command completed, or a LOGOFF command was issued when a session did not exist.

System Action: None.

User Response: None.

USSMSG07 *luname* **UNABLE TO ESTABLISH SESSION —** *runame* **FAILED WITH SENSE** *sense*

Explanation: This message is issued for one of the following reasons:

- A valid logon request was entered and forwarded to an application program, but one of the following occurred:
  - The application program rejected the logon request (by issuing a CLSDST instead of an OPNDST macro).
  - The logical unit rejected the application program's OPNDST macro (by returning a negative response to the BIND request sent by OPNDST).
- The session initiation request was for a cross-domain session. The required SSCP-SSCP session is not active. This may be due to failure to define, activate, or define and activate the host CDRM statement or the CDRM statement for the external CDRM.
- The session initiation request was for a cross-domain session, and the required CDRSC definitions had not been activated.
- No route was available to support the requested session.
- The COS name requested for the session was not defined in the COS table associated with the PLU's domain. (A COS name is selected from the logon mode used for the session.)
- The SSCP of either the PLU or the SLU detected a logic error that prevented session setup (for example, a duplicate network address has been assigned).
- The interpret table recognized an error involving a logon command. The logon command, as entered, cannot be used to establish a session with the application program.

luname is the node (known to VTAM) from which the logon request was entered.

runame is the type of initiation RU being processed. *runame* will be **SETUP** when the RU cannot be determined at the time of the failure. If *runame* is **SETUP**, the session could have been terminated during session setup. See Chapter 14, "Command and RU types in VTAM messages" on page 685, for more information on RUs and command types.

sense is the 8-digit hexadecimal sense code set at failure time. See *z/OS Communications Server: IP and SNA Codes* for more information on sense codes.

System Action: The command is not executed. No session is established between the application program and the logical unit.

User Response: It is possible that the application program cannot accept the session parameters specified by the logon mode name in the LOGON command. It is also possible that the logical unit cannot accept the application program's substituted session parameters. In this situation, a LOGON command specifying a different logon mode name might work. It is also possible that the LOGON command is unrecognized because a proper value was not defined in the interpret table.

This message is generally evidence of improper design of either the application program, the USS table, or the logical unit's application program. Provide the *luname*, *runame*, and *sense* values to the system help desk.

USSMSG08 INSUFFICIENT STORAGE

Explanation: Not enough storage is available for successful processing of a command.

System Action: The command is not executed.

User Response: Reenter the command.

USSMSG09 MAGNETIC CARD DATA ERROR

Explanation: A character-coded command from a logical unit for which SSCPFM=USS3270 is coded contains invalid magnetic card data. Either the card data was entered into a field that was too small, or a parity error occurred.

System Action: The command is not executed.

User Response: Reenter the command. If the magnetic card data has been entered into a field that was too small, press the CLEAR key and reenter the command, entering the magnetic card data into a larger field.

USSMSG10 (user-defined message)

Explanation: You can define this message (with the USSMSG macro) to be issued after a logical unit is activated. See the *z/OS Communications Server: SNA Resource Definition Reference* for more information on the USSMSG macro.

If this message is not defined, users must enter `Alt+SysRq` to enter USS LOGON commands, unless the terminal is defined with SSCPFM=USS3270 or SSCPFM=USS3275.

System Action: The logical unit is activated.

USSMSG11 *parameters* SESSIONS ENDED

Explanation: VTAM has received a TERM SELF RU (with the NOTIFY option specified) from a logical unit. *parameters* are the network-qualified names specified in the TERM SELF RU for the PLU and SLU. See *SNA Format and Protocol Reference Manual: Architectural Logic* for more information.

For example, if an LU-LU session is terminated by an RU specifying APPL1 and APPL2, the following text is displayed:

```
LU1=NETA.APPC1 LU2=NETA.APPL2 SESSIONS ENDED
```

System Action: The session is ended.

User Response: None.

USSMSG12 REQUIRED PARAMETER OMITTED

Explanation: A USS command was missing a required parameter. See the *z/OS Communications Server: SNA Resource Definition Reference* for more information on USS commands for terminal users.

System Action: The command is not executed.

User Response: Reenter the command with the required parameters.

USSMSG13 IBMECHO *data*

Explanation: This message is issued the specified number of times in response to a IBMTEST USS command. If the number of times to issue the message is not specified, the default of 10 times is used. If no data was entered in the USS command, the value for *data* is A–Z and 0–9.

USSMSG14 USS MESSAGE *number* NOT DEFINED

Explanation: One of the preceding USS messages was to be issued, but VTAM could not find the definition for this message. The value of *number* indicates which USS message was not located; see the description of that USS message to determine what condition occurred.

For example, an unrecognized command condition occurred, but VTAM could not locate USSMSG02 in ISTINCDT, the IBM-supplied session-level USS table. Since the IBM-supplied table defines all USS messages (except for 00 and 10), this message has been deleted. USSMSG14 is evidence that the USS tables have been has improperly defined or installed.

System Action: The command is not executed.

User Response: See the user response for USS message *number*.

Chapter 14. Command and RU types in VTAM messages

This chapter lists the command and request/response unit (RU) types that can appear in VTAM messages. See *z/OS Communications Server: SNA Operation* for additional information on commands. See *SNA Formats* for additional information on RUs.

There are two RU types that represent internal VTAM RU flows. These internal RU types are not documented in SNA publications and some are not included in *VTAM Data Areas* .

It is not required that users of the product know the meaning of these internal RUs. When required, the product support organization may use them to assist in internal flow diagnosis.

Access Method RU (AM *type*)
: These internal RUs are requests that may be seen in the PIU trace and are a function of physical unit services (PUNS), configuration services, or session services.

Interprocess Signals (IPS *type*)
: These internal signals are issued for APPN functions. They can be seen in APSEND trace entries.

Command and RU descriptions

The following commands or RU types may appear in VTAM messages.

Command or RU type	Function
ABCONN	Abandon Connection
ABCONNOUT	Abandon Connect Out
ACTCDRM	Activate CDRM
ACTCONNIN	Activate Connect In
ACTIVATE	Activate
ACTLINK	Activate Link
ACTLU	Activate LU
ACTPU	Activate PU
ACTTRACE	Activate Trace
ACTVR	Activate Virtual Route
ADDNR	Add Network Resource
AM ADDLINK	Add Link
AM ADDLSTA	Add Link Station
AM ADRQCMP	Address Request Complete
AM ALLORSC	Allocate Resource
AM CLEANUP	Cleanup
AM CLSACB	Close ACB
AM CONNECT	Connect
AM CONDLOD	Request Conditional Load
AM CS	Configuration Services

© Copyright IBM Corp. 1984, 2002

Command and RU Types

Command or RU type	Function
AM DEACTXF	Deactivate Transforms
AM DELETNR	Delete Network Resource
AM DISCNCT	Disconnect
AM FLUSH	Flush Virtual Route
AM FREERSC	Free Resource
AM GAINGWN	Gained Gateway Node
AM GBIND	Generic BIND
AM GENTERM	Generic Terminate
AM GUNBIND	Generic UNBIND
AM INIT_PU	Initialize PU
AM LOSTGWN	Lost Gateway Node
AM NFY SLT	Notify (Schedule LOSTERM Exit)
AM NOTIFY	Notify
AM OPNACB	Open ACB
AM OSA	Override Session Address
AM PCE	Purge Chain Element
AM PWQ	Purge Wait Queue
AM RDTADD	Resource Definition Add
AM REALLOC	Reallocate
AM REQ ERA	Request Explicit Route Activate
AM REQ VRD	Request Virtual Route Deactivate
AM REQDUMP	Request Dump
AM REQLOAD	Resource Load
AM RESETRT	Reset Routable State
AM RESUME	Resume; used to redrive session setup processing.
AM RNAA	Request Network Address Assignment
AM SC AMRU	Switched Connection AMRU
AM SC EXIT	Switched Connection Exit
AM SETRT	Set Routable State
AM SSA	Set Session Address
AM SSADISC	Set Session Address and Disconnect
AM UNCDLOD	Request Unconditional Load
AM VR INOP	Virtual Route Inoperative
AM VR STAT	Virtual Route Status
ANA	Assign Network Address
ANS	Auto Network Shutdown Started
ANSC	Auto Network Shutdown Complete
API CHGEAF	CHANGE(ENDAFFIN) macro
API CLSPAS	CLSDST(PASS) macro
API CLSRLS	CLSDST(RELEASE) macro

Command or RU type	Function
API INQAPS	INQUIRE(APPSTAT) macro
API INQCID	INQUIRE(CIDXLATE) macro
API INQCNT	INQUIRE(COUNTS) macro
API INQDPY	INQUIRE(DISPLAY) macro
API INQDVC	INQUIRE(DEVCHAR) macro
API INQLOG	INQUIRE(LOGONMSG) macro
API INQNQN	INQUIRE(NQN) macro
API INQPER	INQUIRE(PERSESS) macro
API INQSKY	INQUIRE(SESSKEY) macro
API INQSNM	INQUIRE(SESSNAME) macro
API INQSPM	INQUIRE(SESSPARMS) macro
API INQSTA	INQUIRE(STATUS)macro
API INQTOP	INQUIRE(TOPLOGON) macro
API INQTRM	INQUIRE(TERMS) macro
API INTERP	INTRPRET macro
API OPNACC	OPNDST(ACCEPT) macro
API OPNACQ	OPNDST(ACQUIRE) macro
API OPNRES	OPNDST(RESTORE) macro
API OPNSEC	OPNSEC macro
API RCVCMD	RCVCMD macro
API RECEIV	RECEIVE macro
API REQSES	REQSESS macro
API RSETSR	RESETSR macro
API SEND	SEND macro
API SESONC	SESSIONC macro
API SETGNA	SETLOGON(GNAMEADD) macro
API SETGND	SETLOGON(GNAMEDEL) macro
API SETLQS	SETLOGON(QUIESCE) macro
API SETLSP	SETLOGON(STOP) macro
API SETLST	SETLOGON(START) macro
API SETNPE	SETLOGON(NPERSIST) macro
API SETPER	SETLOGON(PERSIST) macro
API SIMLOG	SIMLOGON macro
API SNDCMD	SENDCMD macro
API TRMSES	TERMSESS macro
BFCINIT	Boundary Function Control Initiate
BFCLEANUP	Boundary Function Cleanup
BFINIT	Boundary Function Initiate
BFTERM	Boundary Function Terminate
BFSESSEND	Boundary Function Session End

Command and RU Types

Command or RU type	Function
BFSESSINFO	Boundary Function Session Information
BFSESSST	Boundary Function Session Start
BID	Bid
BIND	Bind Session
BIND FAIL	Bind Failure
BIS	Bracket Initiation Stopped
CANCEL	Cancel
CD NOTIFY	Cross-Domain Notify
CDCINIT	Cross-Domain Control Initiate
CDINIT OTH	Cross-Domain Initiate (Other)
CDRM CLEAR	Clear CDRM-CDRM Session
CDRM ERP	CDRM ERP Internal Clear
CDSESSEND	Cross-Domain Session Ended
CDSESSST	Cross-Domain Session Started
CDSSF	Cross-Domain Session Setup Failure
CDSTF	Cross-Domain Session Takedown Failure
CDTAKEDOWN	Cross-Domain Takedown
CDTD COMP	Cross-Domain Takedown Complete
CDTERM	Cross-Domain Terminate
CHAR CODED	Unformatted Request Unit
CHASE	Chase
CHG NRSPOL	Change Negative Response to Poll Limit
CHG POLLIM	Change Poll Limit
CHG SESSLM	Change Session Limit
CHG TLIMIT	Change Transmission Limit
CHKPT	Checkpoint Resource Status Function
CINIT	Control Initiate
CKPTN	Checkpoint Node Status Function
CLEANUP	Cleanup
CLEAR	Clear Session
CNM	Communications Network Management Request
CONNOUT	Connect Out
CONTACT	Contact
CONTACTED	Contacted
CPCRYPT	Cryptography Management Function
CPMSG	Internal WTOR Function
CRV	Cryptography Verify
CTERM	Control Terminate
D ADJCP	DISPLAY ADJACENT CONTROL POINT command
D ADJCLUST	DISPLAY ADJACENT CLUSTER TABLE command

Command or RU type	Function
D BNCOSMAP	DISPLAY BORDER NODE CLASS-OF-SERVICE MAPPING command
D CNOS	DISPLAY CHANGE NUMBER OF SESSIONS command
D CONVID	DISPLAY CONVERSATION ID command
D DLURS	DISPLAY DLURS command
D DIRECTRY	DISPLAY DIRECTORY command
D DISK	DISPLAY DISK command
D LMTBL	DISPLAY LU-MODE TABLE command
D NCPSTOR	DISPLAY NCP STORAGE command
D NETSRVR	DISPLAY NETWORK NODE SERVER LIST command
D PATHTAB	DISPLAY PATH TABLE command
D SAMAP	DISPLAY SAMAP command
D STORUSE	DISPLAY STORAGE USAGE command
D TGPS	DISPLAY TRANSMISSION GROUP PROFILES command
D TOPO	DISPLAY TOPOLOGY command
D TRACES	DISPLAY TRACES command
D VTAMOPTS	DISPLAY VTAM START OPTIONS command
DACTCDRM	Deactivate Cross-Domain Resource Manager
DACTCONNIN	Deactivate Connect In
DACTLINK	Deactivate Link
DACTLU	Deactivate LU
DACTPU	Deactivate PU
DACTTRACE	Deactivate Trace
DACTVR	Deactivate Virtual Route
DDDLU RU	Dynamic definition of dependent LUs
DELETE	Delete
DELETENR	Delete Network Resource
DELIVER	Deliver Request
DIAL START	Dial Start Request
DISCONTACT	Discontact RU
DISP STOR	Display Storage
DISPLAY	Display Command
DLR PURGE	Dump/Load/Restart Purge
DSRLST	Cross-Domain Direct Search List
DUMP FINAL	Dump Final
DUMP INIT	Dump Initial
DUMP TEXT	Dump Text
ECHO TEST	ECHO Test
ENT SLOWDN	Enter Slowdown
ER ACT	Explicit Route Activate

Command and RU Types

Command or RU type	Function
ER ACT RPY	Explicit Route Activate Reply
ER INOP	Explicit Route Inoperative
ER OP	Explicit Route Operative
ER TEST	Explicit Route Test
ER TESTED	Explicit Route Tested
ER TST RPY	Explicit Route Test Reply
EXT SLOWDN	Exit Slowdown
F ACT GPT	MODIFY TRACE,TYPE=GPT command
F ACT NCTR	MODIFY TRACE,TYPE=NETCTLR command
F ACT SIT	MODIFY TRACE,TYPE=SIT command
F ACT TG	MODIFY TRACE,TYPE=TG
F ALSLIST	MODIFY ALSLIST command
F ALTRACE	MODIFY TRACE,TYPE=LINE
F CDRM	MODIFY CROSS DOMAIN RESOURCE MANAGER command
F CHKPT	MODIFY CHECKPOINT command
F CHANGE	MODIFY NEGPOLL, or POLL, or SESSLIM
F CNOS	MODIFY CHANGE NUMBER OF SESSIONS command
F COMPRESS	MODIFY COMPRESS command
F DACT GPT	MODIFY NOTRACE,TYPE=GPT command
F DACT SIT	MODIFY NOTRACE,TYPE=SIT command
F DACT TG	MODIFY NOTRACE,TYPE=TG command
F DACTNCTR	MODIFY NOTRACE,TYPE=NETCTLR command
F DEFAULTS	MODIFY DEFAULTS command
F DEFINE	MODIFY DEFINE command
F DIR DEL	MODIFY DIRECTRY,FUNCTION=DELETE command
F DIR UPD	MODIFY DIRECTRY,FUNCTION=UPDATE command
F DIRECTRY	MODIFY DIRECTORY command
F DLTRACE	MODIFY NOTRACE,TYPE=LINE command
F DR DEL	MODIFY DR,TYPE=DELETE
F DR MOVE	MODIFY DR,TYPE=MOVE
F DUMP	MODIFY DUMP command
F DUMP CSP	MODIFY DUMP,TYPE=CSP command
F DUMP DYN	MODIFY DUMP,TYPE=NCP,OPTION=DYNA command
F DUMP MOS	MODIFY DUMP,TYPE=MOSS command
F DUMP PGC	MODIFY DUMP,ACTION=PURGE,TYPE=CSP
F DUMP PGM	MODIFY DUMP,ACTION=PURGE,TYPE=MOSS
F DUMP PGN	MODIFY DUMP,ACTION=PURGE,TYPE=NCP
F DUMP STO	MODIFY DUMP, ACTION=STORE
F DUMP TRC	MODIFY DUMP,ACTION=TRANSFER,TYPE=CSP

Command or RU type	Function
F DUMP TRH	MODIFY DUMP,ACTION=TRANSFER,TYPE=NCP (header)
F DUMP TRM	MODIFY DUMP,ACTION=TRANSFER,TYPE=NCP (main storage)
F DUMP TRN	MODIFY DUMP,ACTION=TRANSFER,TYPE=NCP
F ENCR	MODIFY ENCR command
F EXIT	MODIFY EXIT command
F IMR	MODIFY IMR command
F LINEDEF	MODIFY LINEDEF command
F LL2	MODIFY LL2 command
F LOAD ADD	MODIFY LOAD ADD command
F LOAD CAN	MODIFY LOAD CANCEL command
F LOAD PRG	MODIFY LOAD PURGE command
F LOAD REN	MODIFY LOAD RENAME command
F LOAD REP	MODIFY LOAD REPLACE command
F LOAD SET	MODIFY LOAD SET command
F NOTNSTAT	MODIFY NO TUNING STATISTICS command
F PROFILES	MODIFY PROFILES command
F QUERY	MODIFY QUERY command
F RESOURCE	MODIFY RESOURCE command
F RTP	MODIFY RTP command
F TABLE	MODIFY TABLE command
F TGP	MODIFY TRANSMISSION GROUP PROFILE command
F TNSTAT	MODIFY TUNING STATISTICS command
F TOPO	MODIFY TOPOLOGY command
F USERVAR	MODIFY USERVAR command
F VTAMOPTS	MODIFY VTAM START OPTIONS command
FNA	Free Network Address
FORCE DEAC	Force Deactivate
FORCE REAC	Force Reactivate
FORWARD	Forward Request
GDS CDINIT	Cross domain initiate generalized data stream (GDS) variable
GDS CP_CAP	Control point capabilities generalized data stream (GDS) variable
GDS DELETE	Delete generalized data stream (GDS) variable
GDS FIND	Find generalized data stream (GDS) variable
GDS FOUND	Found generalized data stream (GDS) variable
GDS IOCD	Initiate other cross domain generalized data stream (GDS) variable
GDS LOCATE	Locate generalized data stream (GDS) variable
GDS NOTIFY	Notify generalized data stream (GDS) variable
GDS REGSTR	Register generalized data stream (GDS) variable

Command and RU Types

Command or RU type	Function
GDS TDU	Topology database update generalized data stream (GDS) variable
HALT CDLNK	Process Cross-Domain Links During HALT
HARD INOP	Hard INOP
INACT GVBK	VARY INACT,TYPE=GIVEBACK command
INACT SON	Deactivate (session outage notification)
INIT LOAD	Network Services Initialize Load
INIT OTHER	Initiate-Other RU
INIT SELF	Initiate-Self RU Format 0
INIT SELF	Initiate-Self RU Format 1
INOP	Inoperative
INT SYNCH	TPPOST macro
IPL ABORT	Network Services IPL Abort
IPL FINAL	IPL Final Request
IPL FINAL	Network Control IPL Final
IPL FINAL	Network Services IPL Final
IPL INIT	IPL Initial Request
IPL INIT	Network Control IPL Initial
IPL INIT	Network Services IPL Initial
IPL TEXT	IPL Text Request
IPL TEXT	Network Control IPL Text
IPL TEXT	Network Services IPL Text
IPS ACC	Adjacent control point contacted interprocess signal (IPS)
IPS ACL	Process adjacent cluster interprocess signal (IPS)
IPS ACR	Cross-Domain Response AMRU
IPS BNP	Border node session reply interprocess signal (IPS)
IPS BNQ	Border node session request interprocess signal (IPS)
IPS BRI	Broadcast interprocess signal (IPS)
IPS CBN	Cache border node information interprocess signal (IPS)
IPS CDY	Cross-Domain Resource display
IPS CMA	Process COS mapping interprocess signal (IPS)
IPS COS	Define class of service interprocess signal (IPS)
IPS CPS	CP status interprocess signal (IPS)
IPS CRQ	CRR request
IPS CSH	Cache search interprocess signal (IPS)
IPS CSR	Cache search reply interprocess signal (IPS)
IPS DIA	Display Adjacent Cluster
IPS DLR	DLUR status
IPS DQE	Dequeue interprocess signal (IPS)
IPS DRV	Data recovered

Command or RU type	Function
IPS DSI	DISPLAY SRCHINFO interprocess signal (IPS)
IPS DSN	Directory server notify
IPS ERP	RTP_EXPREC_PURGE
IPS FST	Rapid transport protocol (RTP) free storage
IPS GCR	Generic cache search reply interprocess signal (IPS)
IPS GCS	Generic cache search request interprocess signal (IPS)
IPS GUS	Generic cache search update request interprocess signal (IPS)
IPS INO	Initiate other interprocess signal (IPS)
IPS IOC	Initiate other complete interprocess signal (IPS)
IPS MPI	Multinode persistent session HPR connection information
IPS MSI	Multinode persistent session information
IPS NVP	Nonverify Reply
IPS NVR	Nonverify Request
IPS OTC	Orderly sessions terminate complete interprocess signal (IPS)
IPS OTD	Output topology database update interprocess signal (IPS)
IPS OTR	Orderly sessions terminate request interprocess signal (IPS)
IPS PCQ	PCID query
IPS PCR	PCID query response
IPS PLT	Purge locate timer
IPS PND	Pending session characteristics interprocess signal (IPS)
IPS PNL	Process network node server list interprocess signal (IPS)
IPS PRC	Proceed interprocess signal (IPS)
IPS PRV	Provide session characteristics interprocess signal (IPS)
IPS QED	Queued interprocess signal (IPS)
IPS RAC	Resource available complete interprocess signal (IPS)
IPS RAL	Rapid transport protocol (RTP) allocation
IPS RAT	Rapid transport protocol (RTP) attach
IPS RAV	Resource available interprocess signal (IPS)
IPS RCS	Rapid transport protocol (RTP) connection setup
IPS RDL	Rapid transport protocol (RTP) deallocation
IPS RDT	Rapid transport protocol (RTP) deattach
IPS RIN	Rapid transport protocol (RTP) inactivation
IPS RIO	Rapid transport protocol (RTP) inoperative
IPS RMR	Request multiple routes interprocess signal (IPS)
IPS RQR	Request route interprocess signal (IPS)
IPS RRC	Release request complete interprocess signal (IPS)
IPS RRQ	Release request interprocess signal (IPS)
IPS RSR	Rapid transport protocol (RTP) route setup request
IPS RST	RTP route setup interprocess signal (IPS)

Command and RU Types

Command or RU type	Function
IPS RSU	Rapid transport protocol (RTP) route setup
IPS RTI	Rapid transport protocol (RTP) TG inoperative
IPS SAC	Subarea cleanup interprocess signal (IPS)
IPS SCR	Search request
IPS SDY	Display sessions
IPS SHR	Request single hop route
IPS SIR	Session initiate information request
IPS SRC	Session request complete interprocess signal (IPS)
IPS SRO	CPSVRMGR session outage
IPS SRP	Protocol violation detected
IPS SRQ	Session request interprocess signal (IPS)
IPS SRT	TDU error detected from the DLUR
IPS STP	Start TP
IPS STR	Start TP reply
IPS TGU	TG update
IPS TPE	TP ended
IPS UPD	Update directory
IPS UMR	Update modes interprocess signal (IPS)
LINKLVL2	Enter Test Mode (LL2)
LL2	MODIFY LL2 command
LOAD REQRD	Network Services Load Required
LOAD STAT	Network Services Load Status
LOST CTLPT	Lost Control Point
LOST PATH	Lost Path
LUSTAT	LU Status
MODIFY	MODIFY Command
MODIFY NOTNSTAT	MODIFY NO TUNING STATISTICS command
MODIFY TNSTAT	MODIFY TUNING STATISTICS command
MS SCV	Maintenance Services Set Control Vector
NTNMON RPY	NCPMON reply RU
NCLSA	Network Control Lost Subarea
NMVT	Network Management Vector Transport
NSLSA	Network Services Lost Subarea
NSPE	Network Services Procedure Error
NTFY NS(C)	Notify Session End
NTFY NS(S)	Notify
QC	Quiesce Complete
QEC	Quiesce at End of Chain
RDELETENR	Request Delete Network Resource
REC TEST	Record Test Data

Command or RU type	Function
REC TRACE	Record Line Trace Data
RECFMS	Record Formatted Maintenance Statistics
RECMD	Record Measurement Data
RECMS	Record Maintenance Statistics
RECSTOR	Record Storage
RECTR	Record Test Results
REL IMMED	VARY REL, TYPE=IMMED command
REL GVBK	VARY REL, TYPE=GIVEBACK command
RELEASE	VARY REL command
RELQ	Release Quiesce
REQ ECHO	Request Echo Test
REQ RTTEST	Request Route Test
REQACTCDRM	Request ACTCDRM
REQACTPU	Request Activate PU
REQC	Request Contact
REQCONT	Request Contact
REQDACTPU	Request Deactivate PU
REQDISCONT	Request Discontact
REQDMP CSP	Request CSP Dump
REQDMP MOS	Request MOSS Dump
REQDUMP	Request Dump
REQDUMP DY	Request Dynamic Dump
REQLOAD	Request Load
REQMS	Request Maintenance Statistics
RESET LU	Reset LU
RMPO	Remote Power Off
RNAA	Request Network Address Assignment
ROUTE_INOP	Network Services Route Inoperative
RQR	Request Recovery
RSHUTD	Request Shutdown
RTR	Ready to Receive
SBI	Stop Bracket Initiation
SCV	Set Control Vector
SDT	Start Data Traffic
SELECT VR	Virtual Route Select
SESS ENDED	Session Ended
SESS START	Session Started
SETCV	Set Control Vector
SETCV(NAU)	Set Control Vector Network Addressable Unit
SETCV(SAR)	Set Control Vector Subarea Routing

Command and RU Types

Command or RU type	Function
SETCV(SSS)	Set Control Vector SDLC Secondary Station ID
SETCV(STD)	Set Control Vector Set Time And Date
SETCV(DPU)	Set Control Vector Dynamic Path Update
SETCV(FRS)	Set Control Vector Frame Relay Switching
SETTIM CAN	Scheduled Cancel
SETUP	Generic Session Initiation
SHUTC	Shutdown Complete
SHUTDOWN	Shutdown
SIGNAL	Signal
SOFT INOP	Soft INOP
SSCP TKOVR	SSCP Takeover
STSN	Set and Test Sequence Number
SW TO EP	Switch Line to EP Mode
SW TO NCP	Switch Line to NCP Mode
SYNTAX CHK	VARY ACT,SCOPE=SYNTAX
TERM OTHER	Terminate-Other RU
TERM SELF	Terminate-Self Format 0
TIMER REQ	Set Timer Request
TR_INQUIRY	Translate Inquiry
TR_REPLY	Translate Reply
UBIND FAIL	Unbind Failure
UNBIND	Unbind RU
VARY	VARY command
VARY ACQ	VARY ACQ or VARY ACT, ACQ command
VARY ACT	VARY ACT command
VARY ANS	VARY ANS command
VARY DIAL	VARY DIAL command
VARY DRDS	VARY DRDS command
VARY HGUP	VARY HANGUP command
VARY INACT	VARY INACT or VARY INACT,TYPE=IMMED command
VARY INOP	VARY INOP command
VARY LOGON	VARY LOGON command
VARY NOLOG	VARY NOLOGON command
VARY PATH	VARY PATH command
VARY REL	VARY REL command
V NOLOGON	VARY NOLOGON command
XID	Exchange ID
XID3	Exchange ID 3

Chapter 15. Node and ID types in VTAM messages

This chapter describes the node and ID types that can appear in VTAM operator messages.

Node and ID type descriptions

Node/ID type	Description
ADJ CLUSTER TABLE	Adjacent cluster table
ADJCP	Adjacent control point major node
ADJACENT CP	Adjacent control point
ADJCP MAJOR NODE	Adjacent control point major node
ADJSSCP TABLE	Adjacent SSCP table
APPL	Application program
APPL SEGMENT	Application program major node
APPN COS TABLE	APPN class-of-service table
BN COS MAP TABLE	BN class-of-service map table
CA MAJOR NODE	Channel-attachment major node
CDRM	Cross-domain resource manager
CDRM SEGMENT	Cross-domain resource manager major node
CDRSC	Cross-domain resource
CDRSC SEGMENT	Cross-domain resource major node
CMIP APPL	CMIP application program
CP	Control point
DIRECTORY ENTRY	Entry in directory services database
DYNAMIC APPL	Dynamic application program
DYNAMIC FRSESET	Dynamically defined NCP frame relay switching equipment set (FRSESET)
EXIT	Session management exit
GENERIC RESOURCE	Generic resource name
HOST CP	Host control point
ILU/CDRSC	Independent LU represented as a CDRSC
LCL SNA MAJ NODE	Channel-attached (local) major node consisting of one or more SNA cluster controllers
LCL 3270 MAJ NODE	Local 3270 major node
LINE	Communication line
LINE GROUP	Line group
LINK STATION	PU type 4 or 5 representing an NCP or host processor
LOGICAL UNIT	Logical unit
LUGROUP MAJ NODE	LU group major node
MODEL APPL	Model application program

© Copyright IBM Corp. 1984, 2002

Node/ID type	Description
MODEL LU	Model LU
MODEL LU GROUP	Model LU group
MODEL MAJOR NODE	Model major node
MODEL SEGMENT	Model major node
NN SERVER LIST	Network node server list
N/A	Indicates that the displayed major node represents an ID type, such as a list or table. Some ID types do not get displayed.
PATH TABLE	PATH table
PU_T1	Physical unit type 1
PU_T2	Physical unit type 2
PU_T2.1	Physical unit type 2.1
PU T4/5	Communication controller or a host with an SSCP
RTP MAJOR NODE	Major node that contains all the RTPs
RESOURCE	Resource that may not yet be defined to VTAM
SSCP	System services control point
STATIC FRSESET	Statically defined NCP frame relay switching equipment set (FRSESET)
SW SNA MAJ NODE	Switched SNA major node
TCP/IP MAJOR NODE	TCP/IP major node
TG PROFILE TABLE	APPN Transmission Group Profile
TRL MAJOR NODE	Transport resource list major node
TRLE	Element in the active transport resource list
TSO USERID	TSO user ID that is being displayed.
XCA MAJOR NODE	External communication adapter (XCA) major node

Appendix A. Message additions and changes

This appendix contains the following sections:

- “Message additions”
- “Message deletions” on page 700
- “Message text changes” on page 700
- “New function message additions and changes” on page 700

Message additions

This section includes the text and variable field lengths of the new messages.

See “New function message additions and changes” on page 700 for information about message additions and changes that are associated with new functions.

Note: Within the message text, a percent sign (%) represents a character that is reserved for variable information. The maximum length of the variable is indicated by a percent sign and a number (for example, %8). In some messages, if the variable information is shorter than the variable field, the extra blanks might be suppressed, causing the message text to shift to the left.

New VTAM Operator Messages

```
IST1823I LIST DVIPA SYSNAME  TCPNAME             # ASSIGNED PORTS
IST1824I %4 %15                     %5
IST1825I %8 %8            %5
IST1826I PORTS: %5 %5 %5 %5 %5 %5
IST1827I %5 %5 %5 %5 %5 %5
IST1828I LIST %4 IS UNCLAIMED
IST1829I NO CLAIMED LISTS FOUND FOR THE SPECIFIED DVIPA
IST1830I NO CLAIMED LISTS FOUND
IST1831I %3 OF SYSTEM CSA STORAGE REMAINING = %9
IST1832I CSALIMIT VALUE %9 MIGHT BE TOO SMALL
IST1833I CSA STORAGE ALLOCATION EXCEEDS SPECIFIEDCSALIMIT VALUE
IST1834I LIST DVIPA SYSNAME  TCPNAME    #ENTRIES TGCOUNT SEQNUMBER
IST1835I %4 %15
IST1836I %8 %8 %10 %10
IST1837I %8 %8 %10 %10
IST1838I LIST ENTRY KEYS:
IST1839I %32
IST1841I ACTUAL DATA FLOW RATE = %6 %9
IST1842I NUMBER OF NLPS RETRANSMITTED = %10
IST1843I NUMBER OF NLPS ON WAITING-TO-SEND QUEUE = %5
IST1844I ARB MODE = %6
IST1845I BOUNDARY DIVIDING REGIONS %1 AND %1 = %10 MILLISECONDS
IST1846I %7 RECEIVER THRESHOLD = %9 MICROSECONDS
IST1847I NUMBER OF NLPS ON WAITING-FOR-ACKNOWLEDGEMENT QUEUE = %5
IST1848I SEND BYTE COUNT = %10 RECEIVE BYTE COUNT = %10
IST1849I LARGEST NLP SENT = %10 BYTES
IST1850I LARGEST NLP RECEIVED = %10 BYTES
IST1851I SMOOTHED ROUND TRIP TIME = %10 MILLISECONDS
IST1852I LIVENESS TIMER = %10 SECONDS
IST1853I NUMBER OF NLPS ON OUT-OF-SEQUENCE QUEUE = %5
IST1854I NUMBER OF NLPS ON INBOUND SEGMENTS QUEUE = %5
IST1855I NUMBER OF SESSIONS USING RTP = %10
IST1856I LAST PATH SWITCH OCCURRENCE WAS ON %8 AT %8
IST1857I BACKPRESSURE REASON COUNTS:
IST1858I PATHSWITCH    SEND QUEUE MAX    STORAGE FAILURE
IST1859I %3             %3                %3
```

© Copyright IBM Corp. 1984, 2002

New Messages

```
IST1860I NUMBER OF NLPS SENT = %10 - OVERFLOW = %10
IST1861I NUMBER OF NLPS RECEIVED = %10 - OVERFLOW = %10
IST1862I ARB MAXIMUM SEND RATE = %6 %9
IST1863I SUBAREA             INDEX               ELEMENT
IST1864I X''%4'' (%5)     X''%4'' (%5) X''%4'' (%5)
IST1845I BOUNDARY DIVIDING REGIONS %1 AND %1 = %10 MILLISECONDS
IST1846I %7 RECEIVER THRESHOLD = %9 MICROSECONDS
IST1847I NUMBER OF NLPS ON WAITING-FOR-ACKNOWLEDGEMENT QUEUE = %5
IST1848I SEND BYTE COUNT = %10 RECEIVE BYTE COUNT = %10
IST1849I LARGEST NLP SENT = %10 BYTES
IST1850I LARGEST NLP RECEIVED = %10 BYTES
IST1851I SMOOTHED ROUND TRIP TIME = %10 MILLISECONDS
IST1852I LIVENESS TIMER = %10 SECONDS
IST1853I NUMBER OF NLPS ON OUT-OF-SEQUENCE QUEUE = %5
IST1854I NUMBER OF NLPS ON INBOUND SEGMENTS QUEUE = %5
IST1855I NUMBER OF SESSIONS USING RTP = %10
IST1856I LAST PATH SWITCH OCCURRENCE WAS ON %8 AT %8
IST1857I BACKPRESSURE REASON COUNTS:
IST1858I PATHSWITCH    SEND QUEUE MAX    STORAGE FAILURE
IST1859I %3             %3                %3
IST1860I NUMBER OF NLPS SENT = %10 - OVERFLOW = %10
IST1861I NUMBER OF NLPS RECEIVED = %10 - OVERFLOW = %10
IST1862I ARB MAXIMUM SEND RATE = %6 %9
IST1863I SUBAREA             INDEX               ELEMENT
IST1864I X''%4'' (%5)     X''%4'' (%5) X''%4'' (%5)
IST1865I GLOBAL INOPDUMP = %3
IST1866I TRLE = %8   INOPDUMP = %3
IST1867I INOPDUMP = %3 FOR ALL TRLE-BASED RESOURCES
```

Message deletions

This section includes the text and variable field lengths of deleted messages.

```
IST1620I SUBAREA =X'%8''(%10)ELEMENT =X''%4''(%5)
```

Message text changes

This section includes the text and variable field lengths of messages with text changes.

```
old:  IST1112I CP ALREADY HAS A CP-CP SESSION WITH A NETWORK NODE
new:  IST1112I CP ALREADY HAS A CP-CP SESSION WITH %17

old:  IST1480I RTP END TO END ROUTE - PHYSICAL PATH
new:  IST1480I RTP END TO END ROUTE - RSCV PATH

old:  IST1488I %12 FOR RTP %8 AS %7 PARTNER COMPLETED
new:  IST1488I %12 OF RTP %8 AS %7 TO %17
```

New function message additions and changes

This section describes message additions and changes that are associated with new functions.

CSALIMIT start option

New messages

IST1831I %3 OF SYSTEM CSA STORAGE REMAINING = %9
See page 641 for a description of this message.

IST1832I CSALIMIT VALUE %9 MIGHT BE TOO SMALL
See page 641 for a description of this message.

IST1833I CSA STORAGE ALLOCATION EXCEEDS SPECIFIED CSALIMIT VALUE
See page 642 for a description of this message.

EE/SNA Enhancements

New messages

IST1841I ACTUAL DATA FLOW RATE = %6 %9
See page 643 for a description of this message.

IST1842I NUMBER OF NLPS RETRANSMITTED = %10
See page 643 for a description of this message.

IST1843I NUMBER OF NLPS ON WAITING-TO-SEND QUEUE = %5
See page 643 for a description of this message.

IST1844I ARB MODE = %6
See page 643 for a description of this message.

IST1845I BOUNDARY DIVIDING REGIONS %1 AND %1 = %10 MILLISECONDS
See page 643 for a description of this message.

IST1846I %7 RECEIVER THRESHOLD = %9 MICROSECONDS
See page 643 for a description of this message.

IST1847I NUMBER OF NLPS ON WAITING-FOR-ACKNOWLEDGEMENT QUEUE = %5
See page 643 for a description of this message.

IST1848I SEND BYTE COUNT = %10 RECEIVE BYTE COUNT = %10
See page 643 for a description of this message.

IST1849I LARGEST NLP SENT = %10 BYTES
See page 643 for a description of this message.

IST1850I LARGEST NLP RECEIVED = %10 BYTE
See page 643 for a description of this message.

IST1851I SMOOTHED ROUND TRIP TIME = %10 MILLISECONDS
See page 644 for a description of this message.

IST1852I LIVENESS TIMER = %10 SECONDS
See page 644 for a description of this message.

IST1853I NUMBER OF NLPS ON OUT-OF-SEQUENCE QUEUE = %5
See page 644 for a description of this message.

IST1854I NUMBER OF NLPS ON INBOUND SEGMENTS QUEUE = %5
See page 644 for a description of this message.

IST1855I NUMBER OF SESSIONS USING RTP = %10
See page 644 for a description of this message.

IST1856I LAST PATH SWITCH OCCURRENCE WAS ON %8 AT %8
See page 644 for a description of this message.

IST1857I BACKPRESSURE REASON COUNTS:
See page 644 for a description of this message.

IST1858I PATHSWITCH SEND QUEUE MAX STORAGE FAILURE
See page 644 for a description of this message.

IST1859I %3 %3 %3
See page 644 for a description of this message.

IST1860I NUMBER OF NLPS SENT = %10 - OVERFLOW = %10
See page 644 for a description of this message.

IST1861I NUMBER OF NLPS RECEIVED = %10 - OVERFLOW = %10
See page 645 for a description of this message.

IST1862I ARB MAXIMUM SEND RATE = %6 %9
See page 645 for a description of this message.

Improving VTAM INOP Dump Usability

New messages

IST1865I GLOBAL INOPDUMP = %3
See page 646 for a description of this message.

IST1866I TRLE = %8 INOPDUMP = %3
See page 647 for a description of this message.

IST1867I INOPDUMP = %3 FOR ALL TRLE-BASED RESOURCES
See page 647 for a description of this message.

Sysplex Wide Dynamic Source VIPAs for TCP Connections

New messages

IST1823I LIST DVIPA SYSNAME TCPNAME # ASSIGNED PORTS
See page 641 for a description of this message.

IST1824I %4 %15 %5
See page 641 for a description of this message.

IST1825I %8 %8 %5
See page 641 for a description of this message.

IST1826I PORTS: %5 %5 %5 %5 %5 %5
See page 641 for a description of this message.

IST1827I %5 %5 %5 %5 %5 %5
See page 641 for a description of this message.

IST1828I LIST %4 IS UNCLAIMED
See page 641 for a description of this message.

IST1830I NO CLAIMED LISTS FOUND
See page 641 for a description of this message.

Sysplex Wide Security Assocations

New messages

IST1829I NO CLAIMED LISTS FOUND FOR THE SPECIFIED DVIPA
See page 641 for a description of this message.

IST1834I LIST DVIPA SYSNAME TCPNAME #ENTRIES TGCOUNT SEQNUMBER
See page 641 for a description of this message.

IST1835I %4 %15
See page 642 for a description of this message.

IST1836I %8 %8 %10 %10
See page 642 for a description of this message.

IST1837I %8 %8 %10 %10
See page 642 for a description of this message.

IST1838I LIST ENTRY KEYS:
See page 642 for a description of this message.

IST1839I %32
See page 642 for a description of this message.

Appendix B. Message-flooding prevention

Certain messages in VTAM can be issued several times for an event without supplying new information to the operator (for example, IST264I is issued for each attempted logon from multiple terminals to an undefined application program). These repeating messages can overwhelm an operator console or program operator application, and critical messages could be concealed within this volume of information. To alleviate this occurrence, VTAM includes a message-flooding prevention mechanism.

VTAM uses a table containing a list of pre-designated messages that are candidates for flooding suppression. There is default IBM-supplied table, ISTMSFLD, or a user-defined message-flooding table can be defined. For more information on message-flooding prevention, defining your own message-flooding prevention table, and the IBM-supplied message-flooding prevention table, see the *z/OS Communications Server: SNA Resource Definition Reference*.

The message-flooding prevention table specifies, for each message, the criteria that must be met to prevent the message from being reissued. A message is a candidate for suppression if it is listed in the table and meets the following criteria:

1. Time-span: The message is issued a second time within the specified amount of time (the default is 30 seconds).
2. Suppressible variable-text fields: The specific variable fields listed in the table contain the same information for this issuance of the message as the previous issuance. Only fields listed in the table are checked. The message may have other variable fields which can have different values and still result in suppressing the message.

If the above criteria are met, the message is suppressed. When a message is suppressed it will not be routed to the program operator application or system console to which it was destined. However, the message may be sent to the system hardcopy log if it was destined for the system console, based on the HARDCOPY specification in the message-flooding prevention table (the default in ISTMSFLD is that the message be sent to the system hardcopy log).

Note: The message-flooding prevention table prevents specific messages from being issued by VTAM. This may affect network management application command lists and any automated operations facilities at your installation.

© Copyright IBM Corp. 1984, 2002

Appendix C. Message routing and suppression

This appendix contains the following sections:

- "Message formats"
- "Solicited messages" on page 708
- "Unsolicited messages" on page 710
- "Message rerouting and percolation" on page 710
- "Message descriptor codes" on page 711
- "Message routing codes" on page 712
- "Message suppression levels" on page 713
- Codes and suppression levels
  - "ELM messages for Logon Manager" on page 714
  - "IKT messages for TSO/VTAM" on page 714
  - "IST VTAM operator messages" on page 715
  - "ISU VTAM operator messages" on page 751

This information may help you diagnose problems in program operator applications, understand the way messages are issued, determine which start options to choose, or how to define VTAM.

Message formats

The message format of **all** messages is determined by the destination specified in the USS table.

In pre-Version 4 releases, messages sent to the primary program operator log (PPOLOG) or percolated to a primary program operator (PPO) are copies of messages formatted for the system console or secondary program operator (SPO). In the current version, copies of messages are no longer sent. Messages appear in the format defined in the USS table for the message destination.

The impact to automated operation procedures depends on which USS table is specified for your system console and each program operator application (POA), and whether those tables define messages with or without blank suppression.

- For information about message percolation, see "Message rerouting and percolation" on page 710.
- See the *z/OS Communications Server: SNA Resource Definition Reference* for information about USS message tables.
- See the *z/OS Communications Server: SNA Migration* for information about impacts to automated operations.

© Copyright IBM Corp. 1984, 2002

Format differences

Message format differences are summarized in the following table:

Table 2. Message format differences

	IBM-supplied default USS table (ISTINCNO)	**Default USS table (ISTCFCMM)**
Formats messages for:	System console	PPO
Blank suppression available?	Yes	No
Number of blanks after message ID:	1	2
Note: ISTINCNO can be used for the POA if a message is not found in ISTCFCMM. User-defined tables can also be associated with the system console or POAs. For more information about the order of search for a message, see the *z/OS Communications Server: SNA Resource Definition Reference*		

- Pre-Version 4 Example

  In releases prior to Version 4, if you are using the default USS tables for your system console and POAs, and issue a MODIFY USERVAR command from the system console, the PPO will receive a percolated copy of message IST825I in the following format:

  ```
  IST825I USERVAR DEFINED - NAME = NAME1, VALUE = APPL1
  ```

  This message is identical to the original message built for the system console according to the IBM-supplied default table, ISTINCNO. It has extra blanks suppressed and has one blank following the message ID (IST825I).
  If the MODIFY USERVAR command had been issued from an SPO, the original message IST825I for the SPO and the percolated copy of the message for the PPO would have been formatted according to the default USS table, ISTCFCMM. It would have two blanks following the message ID. Extra blanks would not be suppressed:

  ```
  IST825I  USERVAR DEFINED - NAME = NAME1   , VALUE = APPL1
  ```

  If the PPO was not available, an exact copy would have been sent to the system console.

- Current Version Example

  In the current version, if you are using the default USS tables for your system console and POAs and issue a MODIFY USERVAR command from the system console, the system console will receive message IST825I formatted according to ISTINCNO. Extra blanks will be suppressed and one blank will follow the message ID:

  ```
  IST825I USERVAR DEFINED - NAME = NAME1, VALUE = APPL1
  ```

  The PPO will receive the percolated message IST825I formatted according to ISTCFCMM. Two blanks will follow the message ID. Extra blanks will not be suppressed:

  ```
  IST825I  USERVAR DEFINED - NAME = NAME1   , VALUE = APPL1
  ```

Solicited messages

Solicited messages are those messages that are normally issued in response to an operator command from the system console or from a program operator application (POA).

- From the system console

If a message is solicited from the system console, it is routed to the system console. A message may be sent to the primary program operator (PPO) for one of the following reasons:
  - The message is percolated.
  - PPOLOG=YES was specified as a start option or by the MODIFY PPOLOG command.

  If a message is percolated **and** PPOLOG=YES, the message is sent to the PPO twice.

  For additional information on message percolation and a list of percolated messages, see “Message rerouting and percolation” on page 710.

  For a description of the PPOLOG start option, see the *z/OS Communications Server: SNA Resource Definition Reference* . For a description of the MODIFY PPOLOG command, see *z/OS Communications Server: SNA Operation* .
- From a program operator application (POA)

  If a message is solicited from a POA, it is first routed to the POA. The POA can be a primary program operator (PPO) or a secondary program operator (SPO). If the POA is no longer available and the message requires a reply, the message is redirected to the system console. Messages that do not require a reply are converted to unsolicited messages. For additional information, see “Message rerouting and percolation” on page 710.

  If the original message was solicited from an SPO and is percolated, it is also sent to the PPO. If it cannot be sent to the PPO and has not already been redirected to the system console, it is sent to the system console.

In addition to the normal messages that are solicited as the immediate result of a VTAM operator command, other messages are also considered by VTAM to be solicited:

- When resources are activated at VTAM startup, subsequent messages associated with those resources (other than those directly resulting from another VTAM operator command) will be considered to be solicited and will be returned to the system console or started task where the VTAM START command was issued. This is because VTAM internally saves the console ID of the system console or started task in the control block representing each resource, to be used in later messages. This is also true of resources activated by a VTAM operator command from a POA or system console. These resources can be:
  - Exit routines started at VTAM initialization.
  - Resources started at VTAM initialization via the configuration list.
  - Resources activated by a VTAM operator command from a POA or system console.
- An example is the case of an exit routine activated as a result of VTAM initialization. The IST984I indicating that the user exit is active will return to the system console or started task where the VTAM START command is issued. If the user exit routine goes inactive for some reason, an IST985I message indicating that the user exit failed will also return to the same location, even if VTAM had been started hours or days before the inactivation. The message, from VTAM’s perspective is solicited, not unsolicited.
- Message IST020I VTAM INITIALIZATION COMPLETE is a special case. It is always sent to the master console as a solicited message.

Unsolicited messages

Unsolicited messages are usually those received as a result of an error condition such as an alert. If a message is not solicited, it is first routed to the PPO. If the PPO is not available, the message is redirected to the system console.

Percolated messages can also be received as unsolicited messages. For additional information, see “Message rerouting and percolation”.

A solicited message (not a WTOR) that is destined for a program operator application (POA) that is not active will be converted to an unsolicited message and delivered as an unsolicited message. For additional information, see “Message rerouting and percolation”. There are also cases in which messages that may be expected to be solicited are changed to unsolicited due to an error condition. For example, INOPs override command processing, so the inactivation messages following an INOP are unsolicited. If a VARY INACT is done for an NCP and a hard INOP is received while it is inactivating, the messages about inactivation processing before the INOP will be solicited, but the messages after the INOP will be unsolicited.

Message rerouting and percolation

The following sections describe message rerouting and percolation.

Message rerouting

When a write-to-operator-with-reply (WTOR) is destined for a program operator application (POA) and cannot be delivered, it is rerouted to a system console using the routing codes defined in the appropriate USS message table.

When a message (not a WTOR) is destined for a program operator application (POA) and cannot be delivered, it is converted to an unsolicited message and rerouted to the primary program operator (PPO), if it is available. If the PPO is not available, the message is redirected to the system console using the routing codes defined in the appropriate USS message table.

Message percolation

Message percolation refers to the way that certain VTAM operator messages are routed. Percolation is determined internally by VTAM and cannot be modified by the user.

If the message is in response to a command issued by a secondary program operator (SPO) or a system console operator, it is routed (percolated) to both the originator of the command and the primary program operator (PPO). The PPO receives the message in the form of an unsolicited message.

- If the command was issued by an SPO and an active PPO is not available, the message is routed to the system console as well as to the SPO.
- If a network management application is the PPO, the percolated message may be broadcast to every network management application defined to the application receiving the message.

The following messages are percolated. See Chapter 5, “IST messages for VTAM network operators IST001I – IST399I” on page 33 for a description of each message.

IST154I

IST813I
IST814I
IST825I
IST930I
IST959I
IST973I
IST1030I
IST1150I
IST1151I
IST1153I
IST1283I

Note: IST314I (END) is percolated only if it is part of a percolated message group such as IST1283I.

Message descriptor codes

Descriptor codes describe the kind of message being issued. These codes, with the routing codes, determine how the message is to be printed or displayed and how a message is to be deleted from a display device. Descriptor codes 1–7 are mutually exclusive; only one such code is assigned to a message. Descriptor codes 8–10 can appear with any other descriptor code.

See “Codes and suppression levels” on page 714 for the list of messages and their codes and suppression levels.

Code	Meaning
1	**System Failure**: This message indicates that an error occurred that could not be corrected. To continue, the operator must restart the system.
2	**Immediate Action Required**: This message requires an immediate action by the operator. The action may be required because the message issuer is in a wait state until the action is performed, or because system performance is degraded until the action is taken.
3	**Eventual Action Required**: This message requires an eventual action by the operator. The task does not await completion of the action.
4	**System Status**: This message indicates the status of a system task or the status of a hardware unit.
5	**Immediate Command Response**: This message is issued as an immediate response to a system command. The completion of the response is not dependent upon another system action or task.
6	**Job Status**: This message contains status information regarding the job or job step.
7	**Application Program/Processor**: This message is issued while a program is in problem mode.
8	**Out-of-Line Message**: This message is one of a group of one or more messages to be displayed out of line. If the device support cannot print a message out of line, the code is ignored, and the message is printed in line with other messages.
9	**Operator’s Request**: This message is written in response to an operator’s request for information by DEVSERV, MONITOR, and other operating system commands.

10 This message is issued in response to a TRACK command.

11 This message indicates that a critical event has occurred which must eventually be followed by an action. The message will remain on the screen until the action is taken.

12–16 Reserved.

Message routing codes

Routing codes determine where the message appears. These codes route VTAM and TSO/VTAM messages to selected functional consoles. More than one routing code may be assigned to the message. With multiple-console support, each console operator receives only the messages related to the commands entered at that console or to the functions assigned to that console, regardless of the routing codes assigned to those messages. If a message that is routed to a particular console cannot be issued at that console, that message is issued at the master console.

See “Codes and suppression levels” on page 714 for the list of messages and their codes and suppression levels.

Code **Meaning**

1 **Master Console Action**: This message indicates a change in the system status, and demands action by the master console operator.

2 **Master Console Information**: This message indicates a change in the system status. Such a message does not demand action, but alerts the master console operator to a condition that may require action. This routing code is used for any message that indicates job status, and also for processor and problem program messages to the master console operator.

3 **Tape Pool**: This message specifies the status of a tape unit or reel, the disposition of a tape reel, or other tape-oriented information. For example, a message which requests that tapes be mounted.

4 **Direct Access Pool**: This message specifies the status of a direct access unit or pack, the disposition of a disk pack, or other direct-access-oriented information. For example, a message which requests that disks be mounted.

5 **Tape Library**: This message specifies tape library information. For example, a message which requests, by volume serial numbers, that tapes be obtained for system or programmer use.

6 **Disk Library**: This message specifies disk library information. For example, a message which requests, by volume serial numbers, that disk packs be obtained for system or programmer use.

7 **Unit Record Pool**: This message specifies unit-record equipment information. For example, a message which requests that printer trains be mounted.

8 **Teleprocessing Control**: This message specifies the status or the disposition of data communication equipment. For example, a message which indicates line errors.

9 **System Security**: This message is associated with security checking. For example, a message which requires a reply specifying a password.

10 **System Error Maintenance**: This message indicates either a system error,

or an input/output error that could not be corrected. It also indicates a message associated with system maintenance.

11 **Programmer Information**: This message is for the problem programmer. This routing code is used only when the program issuing the message has no way of routing the message to the programmer using the system-output data set facility. The message appears in the job's system output message class.

Note: Messages assigned routing code 11 will default to the master console if a secondary console, specified during the VTAM definition process to receive these messages, is not active. The messages will not default to the master console, however, if no secondary console was specified to receive these messages.

12 **Emulators**: This message is issued by an emulator program.

13 Reserved for customer use.

14 Reserved for customer use.

15 Reserved for customer use.

16 Reserved for future expansion.

Message suppression levels

The level at which VTAM can suppress a message is designated by either the SUPP start option or the MODIFY SUPP command. If a message is at the designated level or at a lower level, it is not written to the console or to the program operator. Messages at higher levels, as well as messages that cannot be suppressed, continue to go to the console and the program operator.

The following suppression levels are defined by IBM. If you design your own message suppression criteria, it is your responsibility to document any changes to the published message suppression levels. Suppression levels are listed from lowest to highest order.

See "Codes and suppression levels" on page 714 for the list of messages and their codes and suppression levels.

Informational (INFO)

If VTAM suppression level is set to INFO, only messages defined with SUPP=INFO in the USS table will be suppressed.

Informational-level messages do not indicate error conditions and usually indicate that some VTAM processing has been started. These messages probably have little or no effect if omitted.

Warning (WARN)

If VTAM suppression level is set to WARN, messages defined with SUPP=INFO or with SUPP=WARN will be suppressed.

Warning-level messages indicate error conditions that do not cause commands to fail or to be rejected. These messages tell you that a problem exists, such as use of a command that is not valid or a condition in which a minor node cannot be activated. VTAM can continue to process other parts of the command or procedure.

Message Suppression Levels

Normal (NORM)
If VTAM suppression level is set to NORM, messages defined with SUPP=INFO, SUPP=WARN, or SUPP=NORM will be suppressed.

Normal-level messages contain all VTAM completion messages. For example, these messages tell you that commands have completed processing successfully or that a configuration has been activated successfully.

Serious (SER)
If VTAM suppression level is set to SER, messages defined with SUPP=INFO, SUPP=WARN, SUPP=NORM, or SUPP=SER will be suppressed.

Serious-level messages indicate error conditions that cause commands or procedures to fail. These messages tell you that commands must be re-entered or procedures must be re-initiated.

Never (NOSUP or NEVER)
If VTAM suppression level is set to NOSUPP, no messages will be suppressed. If a message is defined with SUPP=NEVER, it will not be suppressed at any VTAM suppression level.

Unsuppressible-level messages can never be suppressed. This level includes messages in any of the following categories:
- Messages indicating failure of the VTAM start procedure
- Messages included in a display resulting from the DISPLAY command
- Messages requesting an operator's reply
- Messages indicating situations that cause or result from abnormal termination of VTAM.

Note: For message groups, if the first message in a group is suppressed, all messages in the group will be suppressed.

Codes and suppression levels

The following tables list the descriptor codes, routing codes, and suppression levels for logon manager, TSO/VTAM, and VTAM operator messages.

ELM messages for Logon Manager

	Descriptor code	Routing codes	Suppression level
ALL	6	2,8	NEVER

IKT messages for TSO/VTAM

MVS identifier	Descriptor code	Routing codes	Suppression level
IKT001D	***	1,8	NEVER
IKT002I	***	1,8	NEVER
IKT003D	***	1,8	NEVER
IKT004D	***	1,8	NEVER
IKT005I	***	1,8	NEVER
IKT006I	***	1,8	NEVER
IKT007I	***	1,8	NEVER

MVS identifier	Descriptor code	Routing codes	Suppression level
IKT008I	***	1,8	NEVER
IKT009I	***	1,8	NEVER
IKT010D	***	1,8	NEVER
IKT011I	***	1,8	NEVER
IKT012D	***	1,8	NEVER
IKT013I	***	1,8	NEVER
IKT014I	***	1,8	NEVER
IKT015I	***	1,8	NEVER
IKT016D	***	1,8	NEVER
IKT017I	***	1,8	NEVER
IKT018I	***	1,8	NEVER
IKT020I	***	1,8	NEVER
IKT026D	***	1,8	NEVER
IKT028I	***	1,8	NEVER
IKT029I	***	1,8	NEVER
IKT030I	***	1,8	NEVER
IKT100I	4	2,8	NEVER
IKT103I	4	2,8	NEVER
IKT104I	4	2,8	NEVER
IKT105I	4	1,8	NEVER
IKT106I	4	1,8	NEVER
IKT109I	4	2,8	NEVER
IKT111I	4	2,8	NEVER
IKT112I	4	2,8	NEVER.
IKT115I	4	2,8	NEVER
IKT116I	4	2,8	NEVER
IKT117I	4	2,8	NEVER
IKT118I	4	2,8	NEVER
IKT119I	4	2,8	NEVER
IKT120I	4	2,8	NEVER.
IKT121I	4	2,8	NEVER
IKT122I	4	1,8	NEVER
IKT123I	5	2	NEVER
IKT124I	5	2	NEVER

IST VTAM operator messages

Message identifier	Descriptor code	Routing code	Suppression level
IST001I	5	2	NEVER
IST003I	5	2	SER

VTAM Operator Messages

Message identifier	Descriptor code	Routing code	Suppression level
IST004I	5	2	NEVER
IST009I	5	2	NEVER
IST010I	5	2	SER
IST011I	5	2	NORM
IST013I	4	2,10	INFO
IST014I	5	1	WARN
IST015A	2	1	NEVER
IST017I	5	2	WARN
IST018I	5	2	WARN
IST020I	5	2	NORM
IST025I	5	2	WARN
IST033I	5	2	SER
IST037I	5	2	SER
IST038I	5	2	SER
IST039I	5	2	NORM
IST040I	5	2	NEVER
IST043I	5	2	SER
IST046I	5	2	WARN
IST049I	5	2	NEVER
IST050I	5	2	SER
IST051A	2	1	NEVER
IST052I	5	2	WARN
IST054I	5	2	WARN
IST056A	2	1	NEVER
IST057I	5	2	WARN
IST058I	5	2	WARN
IST059I	5	2	WARN
IST061I	5	2	SER
IST066I	5	2	SER
IST072I	5	2	SER
IST073I	5	2	SER
IST074I	5	2	SER
IST075I	5	2	NEVER
IST077I	5	2,8	NEVER
IST080I	5	2	NEVER
IST081I	5	2	NEVER
IST082I	5	2	NEVER
IST084I	5	2	NEVER
IST085I	5	2	SER
IST087I	5	8	NEVER

Message identifier	Descriptor code	Routing code	Suppression level
IST089I	5	2	NEVER
IST092I	5	2	NEVER
IST093I	5	2	NORM
IST095A	2	1	NEVER
IST096I	5	2	SER
IST097I	5	8	NEVER
IST101I	5	2	SER
IST102I	4	2,8	NEVER
IST105I	5	2	NORM
IST107I	5	2	WARN
IST109I	5	2	INFO
IST112I	5	2	NEVER
IST113I	5	2	NEVER
IST115I	5	2	WARN
IST116I	6	2	WARN
IST117I	4	2,10	WARN
IST118I	5	2	WARN
IST120I	5	2	NORM
IST122I	6	2	WARN
IST124I	5	2	SER
IST126I	5	2	WARN
IST127I	6	2	SER
IST128I	6	2	SER
IST129I	5	2,8,10	WARN
IST130I	4	2	SER
IST132I	5	2	SER
IST133I	4	2	INFO
IST134I	5	2	NEVER
IST135I	5	2	NEVER
IST136I	5	2	NEVER
IST137I	5	2	WARN
IST142I	5	2	WARN
IST146I	5	2	NEVER
IST148I	5	2	NEVER
IST149I	5	2	NEVER
IST150I	5	2	NORM
IST153I	6	2	INFO
IST154I	5	2	SER
IST155I	5	2	SER
IST159I	5	2	NEVER

VTAM Operator Messages

Message identifier	Descriptor code	Routing code	Suppression level
IST165I	5	2	NORM
IST167I	5	2	NEVER
IST168I	5	2	NEVER
IST169I	5	2	INFO
IST170I	5	2	NEVER
IST171I	5	2	NEVER
IST172I	5	2	NEVER
IST176I	5	2	SER
IST180I	5	2	WARN
IST181I	5	2	WARN
IST182I	5	2	WARN
IST183A	2	2	NEVER
IST184I	5	2	WARN
IST185I	5	2	WARN
IST186I	5	2	WARN
IST187I	5	2	SER
IST191I	5	2	SER
IST192I	5	2	WARN
IST193I	5	2	SER
IST194I	5	2	SER
IST195I	5	2	SER
IST198I	5	2	NEVER
IST199I	5	2	NORM
IST206I	5	2	NEVER
IST208I	5	2	WARN
IST211I	4	2	WARN
IST212I	5	8	NEVER
IST213I	5	8	NEVER
IST214I	4	2	WARN
IST219I	4	2	WARN
IST221I	5	2	NORM
IST223I	5	2	NEVER
IST225I	5	2	SER
IST226I	5	2	INFO
IST228I	5	2	NEVER
IST231I	5	2,8	NEVER
IST232I	5	2,8	NEVER
IST234I	4	2,8,10	WARN
IST238I	4	8	WARN
IST240A	2	2	NEVER

Message identifier	Descriptor code	Routing code	Suppression level
IST241I	5	8	NORM
IST242I	4	8	SER
IST243I	5	8	NORM
IST244I	5	8	NEVER
IST245I	5	8	NEVER
IST246I	4	8	NEVER
IST247I	5	2,8	NEVER
IST252I	5	2	NEVER
IST257I	4	2,8	SER
IST258I	5	2	WARN
IST259I	4	8	WARN
IST260I	5	2	WARN
IST262I	5	2,8	NEVER
IST264I	4	8	SER
IST265I	4	8	SER
IST266I	5	2	INFO
IST270I	5	2	NORM
IST271I	5	2	NEVER
IST272A	2	1	NEVER
IST278A	2	1	NEVER
IST282A	3	1	NEVER
IST284A	2	1	NEVER
IST285I	5	2	SER
IST301I	5	2	WARN
IST302I	5	2	WARN
IST303I	5	2	WARN
IST309I	5	2,4,8	WARN
IST310I	5	2	SER
IST311I	5	2,4,8	WARN
IST314I	5	2	NEVER
IST315I	5	2	NORM
IST316I	5	2	NORM
IST317I	5	2	SER
IST318I	5	2	SER
IST319I	5	2	NORM
IST320I	5	2	WARN
IST321I	5	2	WARN
IST322I	5	2	WARN
IST323I	5	2	WARN
IST324I	5	2	INFO

VTAM Operator Messages

Message identifier	Descriptor code	Routing code	Suppression level
IST326I	5	2	NORM
IST327I	5	2	NORM
IST328I	5	2	NORM
IST330I	5	2	WARN
IST331I	5	2	WARN
IST333I	5	2	WARN
IST336I	5	2	NEVER
IST339I	5	2	WARN
IST348I	5	2	NORM
IST350I	5	2	NEVER
IST351I	5	2	NEVER
IST352I	5	2	NEVER
IST353I	5	2	NEVER
IST354I	5	2	NEVER
IST355I	5	2	NEVER
IST356I	5	2	NEVER
IST359I	5	2	NEVER
IST360I	5	2	NEVER
IST361A	2	2	NEVER
IST362I	5	2	WARN
IST363I	5	2	WARN
IST366I	5	2	WARN
IST367I	5	2	WARN
IST368I	5	2	WARN
IST380I	5	2	NORM
IST381I	5	2	SER
IST382I	5	2	SER
IST383I	5	2	NORM
IST384I	5	2	SER
IST388I	5	8	NEVER
IST389I	5	8	NEVER
IST391I	5	8	NEVER
IST393I	5	8	NEVER
IST394I	5	8	NEVER
IST395I	5	8	NEVER
IST396I	5	8	NEVER
IST397I	5	8	NEVER
IST398I	5	8	WARN
IST399E	3	2	SER
IST400I	5	2	NORM

Message identifier	Descriptor code	Routing code	Suppression level
IST401I	5	2	NEVER
IST403I	5	2	SER
IST407I	5	2	NEVER
IST408I	5	2	NEVER
IST409I	5	2	NEVER
IST410I	5	1	NEVER
IST411I	5	2	SER
IST412I	5	2	INFO
IST413I	5	2	NEVER
IST414I	5	2	SER
IST416I	4	2,8	NEVER
IST422I	5	2	WARN
IST423I	5	2	WARN
IST424I	5	2	WARN
IST425I	5	2	WARN
IST430I	5	2	WARN
IST432I	5	2	SER
IST433I	5	2	SER
IST435I	5	2	WARN
IST436I	5	2	WARN
IST437I	5	2	WARN
IST440I	4	2	NEVER
IST441I	4	2	NEVER
IST442I	4	2	NEVER
IST443I	4	2	NEVER
IST446I	5	2	WARN
IST447I	5	2	WARN
IST448I	5	2	NEVER
IST449I	5	8	NEVER
IST450I	5	2	SER
IST451I	5	8	NEVER
IST452I	5	8	SER
IST453I	5	8	NEVER
IST454I	5	8	SER
IST455I	5	2	NORM
IST456I	5	8	SER
IST457I	5	2	NORM
IST458I	5	2	NEVER
IST459I	5	2	SER
IST460I	5	2	SER

VTAM Operator Messages

Message identifier	Descriptor code	Routing code	Suppression level
IST461I	4	2	NORM
IST462I	5	2	WARN
IST464I	4	2	NORM
IST465I	5	2	SER
IST466I	4	2	WARN
IST467I	5	8	SER
IST473I	4	2,8	WARN
IST474I	5	2	NEVER
IST475I	5	2	NEVER
IST476I	5	2	NEVER
IST477I	5	2	NEVER
IST478I	5	2	NEVER
IST479I	5	2	NEVER
IST482I	5	8	NEVER
IST483I	5	8	NEVER
IST484I	5	2	NEVER
IST486I	5	8	NEVER
IST487I	5	2	INFO
IST488I	5	2	SER
IST489I	5	2	WARN
IST490I	5	2	SER
IST493I	5	2	SER
IST494I	5	2	SER
IST495I	4	2	NEVER
IST496E	3	8	WARN
IST499I	5	2	NORM
IST500I	4	2,8	WARN
IST501I	4	2,8	NEVER
IST502A	2	2,8	NEVER
IST503I	4	2,8	NEVER
IST504I	4	2,8	INFO
IST505I	4	2,8	NORM
IST506I	4	2,8	WARN
IST507I	4	2,8	WARN
IST510I	5	8	NEVER
IST511I	5	2	NEVER
IST512I	5	2	NEVER
IST513I	5	2	NEVER
IST516I	5	2	NEVER
IST517I	5	2	NEVER

Message identifier	Descriptor code	Routing code	Suppression level
IST518I	5	2	NEVER
IST520I	4	8	NEVER
IST521I	4	8	SER
IST522I	4	8	SER
IST523I	4	8	INFO
IST524I	4	8	INFO
IST525I	4	8	INFO
IST526I	5	2	WARN
IST528I	4	8	INFO
IST529I	4	8	WARN
IST530I	4	8	INFO
IST531I	4	8	INFO
IST533I	5	8	NEVER
IST534I	5	8	NEVER
IST535I	5	8	NEVER
IST536I	5	8	NEVER
IST537I	5	8	NEVER
IST538I	5	8	NEVER
IST539I	5	8	NEVER
IST540I	5	8	NORM
IST541I	5	8	WARN
IST542I	5	8	WARN
IST543I	5	8	WARN
IST544I	5	8	WARN
IST546I	4	8	NEVER
IST547I	4	8	INFO
IST548I	4	2	SER
IST549I	5	8	NORM
IST561I	5	2	SER
IST562I	5	2	SER
IST563I	5	2	SER
IST564I	5	2	SER
IST565I	5	2	SER
IST566I	5	2	SER
IST567I	5	2	NORM
IST571I	5	2	SER
IST572I	5	8	NEVER
IST574E	3	2	SER
IST576I	5	2,8	NEVER
IST577I	4	2	NEVER

VTAM Operator Messages

Message identifier	Descriptor code	Routing code	Suppression level
IST578I	4	2	NEVER
IST579I	4	2	NEVER
IST580I	4	2	NEVER
IST581I	4	2	NEVER
IST582I	5	8	WARN
IST583I	5	2	SER
IST585E	3	2	SER
IST587I	4	8	WARN
IST588I	5	2,8	NEVER
IST589I	4	8	WARN
IST590I	4	8	INFO
IST591E	3	2	SER
IST592I	5	2	NEVER
IST593I	5	2	WARN
IST594I	5	2	WARN
IST595I	5	8	NEVER
IST596I	5	8	NEVER
IST597I	5	8	NEVER
IST599I	5	8	NEVER
IST602I	5	2	SER
IST605I	5	2	SER
IST607I	5	2	SER
IST608I	5	2	SER
IST610I	5	8	NEVER
IST611I	5	8	NEVER
IST617I	5	2	INFO
IST619I	4	2,8	WARN
IST621I	4	2,8	NORM
IST623I	5	8	NEVER
IST624I	5	8	NEVER
IST627I	5	2	SER
IST632I	5	2	NEVER
IST633I	5	2	NEVER
IST634I	5	8	NEVER
IST635I	5	8	NEVER
IST636I	5	8	NEVER
IST637I	5	8	NEVER
IST638I	5	8	NEVER
IST639I	5	8	NEVER
IST640I	5	8	NEVER

Message identifier	Descriptor code	Routing code	Suppression level
IST641I	5	8	NEVER
IST642I	5	8	NEVER
IST643I	5	8	NEVER
IST644I	5	8	NEVER
IST645I	5	2	SER
IST650I	5	2	NEVER
IST652I	5	2	NEVER
IST654I	5	2	NEVER
IST655I	5	2	NEVER
IST656I	5	2	INFO
IST658I	5	8	NEVER
IST660I	5	2	WARN
IST663I	4	8	SER
IST664I	4	8	SER
IST670I	4	8	NORM
IST674I	5	2	NORM
IST675I	5	8	NEVER
IST678I	5	2	NEVER
IST679A	2	1	NEVER
IST680I	4	8	SER
IST683I	4	8	SER
IST684I	4	8	WARN
IST688I	5	2	SER
IST690I	4	8	SER
IST693I	4	8	SER
IST700I	5	2	WARN
IST701I	5	2	INFO
IST702I	5	2	WARN
IST703I	5	2	WARN
IST706I	5	2	WARN
IST707I	5	2	INFO
IST708I	5	2	WARN
IST709I	5	2	SER
IST710I	4	2	WARN
IST712I	5	2	WARN
IST713I	5	2	WARN
IST714I	5	2	WARN
IST715I	5	2	WARN
IST716I	4	8	WARN
IST717I	4	8	WARN

VTAM Operator Messages

Message identifier	Descriptor code	Routing code	Suppression level
IST718I	5	8	WARN
IST719I	5	8	WARN
IST720I	5	8	INFO
IST721I	4	8	WARN
IST723I	4	8	INFO
IST725I	4	8	INFO
IST726I	4	8	INFO
IST727I	4	8	NORM
IST728I	4	8	INFO
IST732I	4	8	SER
IST734I	4	8	SER
IST735I	4	8	INFO
IST737I	4	8	INFO
IST740I	4	8	WARN
IST742I	4	8	INFO
IST744I	4	8	INFO
IST745I	4	8	INFO
IST746I	4	8	INFO
IST751I	5	2,8	NEVER
IST752I	5	8	NEVER
IST755I	4	8	NORM
IST756E	3	8	SER
IST757E	3	8	SER
IST758E	3	8	SER
IST759E	3	8	SER
IST760E	3	8	SER
IST761E	3	8	SER
IST762I	4	8	NORM
IST763I	4	8	NORM
IST764I	4	8	NORM
IST765E	3	8	SER
IST766I	5	2	NORM
IST767E	3	8	SER
IST768E	3	8	SER
IST769E	3	8	SER
IST770E	3	8	SER
IST771E	3	8	SER
IST772I	5	8	SER
IST773I	5	8	SER
IST778I	4	8	INFO

Message identifier	Descriptor code	Routing code	Suppression level
IST784I	5	8	NEVER
IST786I	5	8	NEVER
IST787I	5	8	SER
IST788I	5	8	NEVER
IST789I	5	8	NEVER
IST790I	5	8	NEVER
IST792I	5	2	NEVER
IST793E	3	8	SER
IST794I	5	2	NEVER
IST796I	5	2	WARN
IST797I	5	2	NEVER
IST798I	5	2	NEVER
IST799I	5	8	NEVER
IST803I	5	2	NEVER
IST804I	5	2	INFO
IST805I	5	2	NORM
IST806I	5	2	NORM
IST807I	5	2	SER
IST808I	5	8	NEVER
IST809I	5	8	NEVER
IST812I	5	8	NEVER
IST813I	5	8	NEVER
IST814I	5	8	NEVER
IST815I	5	4,5,9	NEVER
IST816I	5	2	NEVER
IST819I	4	8	NORM
IST820I	4	8	SER
IST821I	5	2	NORM
IST822I	4	8	SER
IST823I	4	2	WARN
IST824I	4	2	WARN
IST825I	5	8	NEVER
IST826I	5	2	NEVER
IST830I	4	8	SER
IST831I	4	2	WARN
IST832I	4	2	WARN
IST833I	4	2	WARN
IST834I	5	8	NEVER
IST836I	4	2	WARN
IST837I	4	2	WARN

VTAM Operator Messages

Message identifier	Descriptor code	Routing code	Suppression level
IST838I	7	2	NEVER
IST839I	7	2	NEVER
IST840I	7	2	NEVER
IST841I	5	2	NEVER
IST842I	5	2	NORM
IST844I	5	2	NEVER
IST845I	4	2	WARN
IST846I	5	2	INFO
IST849I	5	2	WARN
IST860I	5	2	WARN
IST861I	5	2	NEVER
IST862I	5	2	NEVER
IST863I	5	2	NEVER
IST864I	5	2	NEVER
IST865I	5	2	NEVER
IST866I	5	2	NEVER
IST867I	5	2	INFO
IST869I	5	2	NEVER
IST870I	5	2	NORM
IST871I	5	2	NORM
IST872I	5	2	NORM
IST873I	5	2	NEVER
IST874I	5	2	NEVER
IST875I	5	2	NEVER
IST876I	5	2	NEVER
IST877I	5	2	NEVER
IST878I	5	2	NEVER
IST879I	5	2	NEVER
IST880I	5	2	NEVER
IST881I	5	2	NORM
IST882I	5	2	NORM
IST883I	5	2	NEVER
IST886I	5	2	NORM
IST887I	5	2	NEVER
IST888I	5	2	NEVER
IST889I	4	8	INFO
IST890I	5	2	SER
IST891I	4	8	INFO
IST892I	4	8	INFO
IST893I	4	8	INFO

Message identifier	Descriptor code	Routing code	Suppression level
IST894I	4	8	INFO
IST895I	4	8	INFO
IST896I	5	2	INFO
IST897I	5	2	INFO
IST898I	5	8	NEVER
IST899I	5	2	INFO
IST900I	5	2	INFO
IST901A	5	2	NEVER
IST902A	5	2	NEVER
IST903A	5	2	NEVER
IST904A	5	2	NEVER
IST905A	5	2	NEVER
IST906A	5	2	NEVER
IST907A	5	2	NEVER
IST908A	5	2	NEVER
IST909A	5	2	NEVER
IST910I	5	2	INFO
IST911I	5	2	INFO
IST912I	5	2	INFO
IST913I	5	2	INFO
IST914I	5	2	INFO
IST915I	5	2	INFO
IST916I	5	2	INFO
IST917I	5	2	INFO
IST918A	5	2	NEVER
IST919I	5	2	NORM
IST920I	5	2	NEVER
IST921I	5	2	NEVER
IST922I	5	2	NEVER
IST923I	5	2	NEVER
IST924I	5	2	NEVER
IST925I	5	2	NEVER
IST926I	5	2	NORM
IST927I	5	2	NORM
IST928I	5	2	NORM
IST929I	5	2	NORM
IST930I	5	2	NEVER
IST931I	4	8	NEVER
IST932E	3	2	SER
IST933I	5	2	NEVER

VTAM Operator Messages

Message identifier	Descriptor code	Routing code	Suppression level
IST934I	5	2	NEVER
IST935I	5	2	NEVER
IST936I	5	2	NEVER
IST937A	2	2	NEVER
IST938I	5	2	NEVER
IST939I	5	2	SER
IST940I	4	8	SER
IST946I	5	2	NEVER
IST947I	5	2	NEVER
IST948I	5	2	NEVER
IST949I	5	2	WARN
IST950I	5	2,8	NEVER
IST951I	5	2	NEVER
IST952I	5	2	NEVER
IST953I	5	2	NEVER
IST954I	5	2	NEVER
IST955I	5	2	NEVER
IST956I	5	2	NEVER
IST957I	5	2	NEVER
IST958I	5	2	NEVER
IST959I	5	2	WARN
IST960I	5	2	SER
IST961I	3	2	NEVER
IST962I	4	8	INFO
IST963I	3	2	NEVER
IST965I	3	2	NEVER
IST966I	5	2,8	NEVER
IST967I	4	2	WARN
IST968I	4	2	WARN
IST970I	4	2	WARN
IST971I	5	8	NEVER
IST972I	5	2	SER
IST973I	5	2	INFO
IST974I	5	2	INFO
IST976I	5	2	WARN
IST977I	5	2	NEVER
IST979I	5	2	WARN
IST981I	5	2	NEVER
IST982I	4	8	INFO
IST983E	11	2	NEVER

Message identifier	Descriptor code	Routing code	Suppression level
IST984I	4	8	NEVER
IST985I	4	8	NEVER
IST986I	5	2	NEVER
IST987I	5	2	NEVER
IST988I	5	2	NEVER
IST989I	5	2	NEVER
IST990E	3	2	WARN
IST991I	5	2	WARN
IST996I	5	8	NEVER
IST997I	5	8	NEVER
IST998E	3	2	NEVER
IST999E	3	2	NEVER
IST1000I	5	2	NEVER
IST1001I	5	8	NEVER
IST1002I	5	8	NEVER
IST1003I	5	8	NEVER
IST1004I	5	8	NEVER
IST1005I	5	8	NEVER
IST1006I	5	8	NEVER
IST1007I	5	8	NEVER
IST1008I	5	8	NEVER
IST1009I	5	8	NEVER
IST1010I	5	8	NEVER
IST1011I	5	2	WARN
IST1012I	5	8	NEVER
IST1013I	5	8	NEVER
IST1014I	5	2	SER
IST1015I	4	8	SER
IST1016I	5	2	INFO
IST1017I	5	2	NEVER
IST1018I	5	2	NEVER
IST1019I	5	8	NEVER
IST1020I	5	2	SER
IST1021I	8	5	NEVER
IST1022I	4	2	NEVER
IST1023E	3	2	SER
IST1024I	2	4	WARN
IST1025I	5	2	NEVER
IST1026I	5	2	NEVER
IST1027I	5	2	NEVER

VTAM Operator Messages

Message identifier	Descriptor code	Routing code	Suppression level
IST1028I	4	8	SER
IST1029I	5	8	NEVER
IST1030I	5	8	NEVER
IST1031I	5	8	NEVER
IST1032I	5	8	SER
IST1033I	5	2	NEVER
IST1034I	5	2	NEVER
IST1035I	4	8	WARN
IST1036I	2	2	SER
IST1037I	2	2	SER
IST1038I	5	2	NEVER
IST1039I	5	2	NEVER
IST1040I	5	8	NEVER
IST1041I	5	2	NEVER
IST1042I	5	2	NEVER
IST1043I	5	2	NEVER
IST1044I	5	2	NEVER
IST1045I	5	2	NORM
IST1046I	5	2	NEVER
IST1048I	5	2	NEVER
IST1049I	5	2	NEVER
IST1050I	5	2	NEVER
IST1051I	4	8	INFO
IST1052I	5	2	NEVER
IST1053I	5	2	NEVER
IST1054I	5	2	NEVER
IST1055I	5	2	NEVER
IST1056I	5	2	NEVER
IST1057I	5	2	NEVER
IST1058I	5	2	INFO
IST1059I	5	2	INFO
IST1060I	5	2	INFO
IST1061I	5	2	INFO
IST1062I	4	8	INFO
IST1063I	5	2	WARN
IST1064I	5	2	WARN
IST1065I	5	2	INFO
IST1066I	5	2	INFO
IST1067I	5	2	NEVER
IST1068I	5	2	NEVER

Message identifier	Descriptor code	Routing code	Suppression level
IST1069I	5	2	NEVER
IST1070I	5	2	NEVER
IST1071I	5	2	NEVER
IST1072I	5	2	NEVER
IST1073I	5	2	NEVER
IST1074I	5	2	NEVER
IST1075I	5	2	NEVER
IST1076I	5	2	NEVER
IST1077I	5	2	NEVER
IST1078I	5	2	NEVER
IST1079I	5	2	NEVER
IST1080I	5	2	NEVER
IST1081I	5	2	NEVER
IST1082I	5	2	NORM
IST1083I	5	2	SER
IST1084I	5	2	NEVER
IST1085I	5	2	SER
IST1086I	5	2	NORM
IST1088I	5	2	NORM
IST1089I	5	2	NEVER
IST1090I	5	2	NORM
IST1091I	5	2	NEVER
IST1092I	5	2	NEVER
IST1093I	5	2	NEVER
IST1094I	5	2	NEVER
IST1095I	5	2	SER
IST1096I	5	2	NORM
IST1097I	5	2	NORM
IST1098I	5	2	NEVER
IST1099I	5	2	NEVER
IST1100I	5	2	NEVER
IST1101I	5	2	NEVER
IST1102I	5	2	NEVER
IST1103I	5	2	NEVER
IST1104I	5	2	NEVER
IST1105I	5	2	NEVER
IST1106I	5	2	NEVER
IST1107I	5	2	NEVER
IST1108I	5	2	NEVER
IST1110I	5	2	SER

VTAM Operator Messages

Message identifier	Descriptor code	Routing code	Suppression level
IST1111I	5	2	SER
IST1112I	5	2	SER
IST1113I	5	2	SER
IST1114I	5	2	NEVER
IST1115I	6	2	NEVER
IST1116I	6	2	WARN
IST1117I	5	2	WARN
IST1118I	3	2	NEVER
IST1119I	3	2	NEVER
IST1120I	5	2	SER
IST1121I	5	2	WARN
IST1122I	5	2	WARN
IST1123I	5	2	NEVER
IST1124I	3	2	WARN
IST1125I	3	2	WARN
IST1126I	3	2	WARN
IST1127I	3	2	WARN
IST1128I	5	2	WARN
IST1129I	5	2	SER
IST1130I	5	2	SER
IST1131I	5	2	NEVER
IST1132I	5	2	NORM
IST1133I	5	2	NORM
IST1134I	5	2	NORM
IST1135I	5	2,8,10	WARN
IST1136I	5	2,8,10	WARN
IST1137I	5	2	SER
IST1138I	4	8	SER
IST1139I	5	2	NORM
IST1140I	5	2	SER
IST1141I	5	2	SER
IST1142I	5	2	SER
IST1143I	5	2	NORM
IST1144I	5	2	NORM
IST1145I	5	2	SER
IST1146I	5	2	WARN
IST1147I	5	2	WARN
IST1148I	5	2	WARN
IST1149I	4	8	NORM
IST1150I	5	8	NEVER

Message identifier	Descriptor code	Routing code	Suppression level
IST1151I	5	8	NEVER
IST1152I	5	2	NORM
IST1153I	5	2	NEVER
IST1154I	5	2	NEVER
IST1155I	5	2	SER
IST1156I	5	2	NEVER
IST1157I	3	2	WARN
IST1158I	5	2	NEVER
IST1159I	5	2	NEVER
IST1160I	5	2	NEVER
IST1161I	5	2	NEVER
IST1162I	5	2	NEVER
IST1163I	5	2	NEVER
IST1164I	5	2	NEVER
IST1165I	5	2	NEVER
IST1166I	5	2	WARN
IST1167I	5	2	WARN
IST1168I	5	2	NEVER
IST1169E	11	2	NEVER
IST1171I	5	2	WARN
IST1172I	5	2	WARN
IST1174I	4	2	NORM
IST1175I	5	2	WARN
IST1176I	5	2	NEVER
IST1177I	5	2	NEVER
IST1183I	5	2	SER
IST1184I	5	2	NEVER
IST1185I	5	2	NEVER
IST1186I	5	2	NEVER
IST1187I	5	2	SER
IST1188I	5	2	NEVER
IST1189I	5	2	NEVER
IST1190I	3	2	NORM
IST1191I	3	2	NORM
IST1192I	3	2	NORM
IST1193I	3	2	SER
IST1194I	3	2	WARN
IST1196I	5	2	NORM
IST1197I	5	2	NORM
IST1198I	5	2	NORM

VTAM Operator Messages

Message identifier	Descriptor code	Routing code	Suppression level
IST1199I	5	2	WARN
IST1200I	5	2	NEVER
IST1201I	5	2	SER
IST1202I	5	2	NEVER
IST1203I	5	2	NEVER
IST1204I	5	2	NEVER
IST1205I	5	2	WARN
IST1206I	5	2	WARN
IST1207I	5	2	WARN
IST1208I	5	2	WARN
IST1209I	5	2	WARN
IST1211I	4	2,8,10	WARN
IST1212I	5	2,8	NEVER
IST1213I	5	2	WARN
IST1214I	5	2	WARN
IST1215I	5	2	NEVER
IST1216A	2	1	NEVER
IST1217A	2	1	NEVER
IST1218I	5	2	NEVER
IST1219I	5	2	NEVER
IST1220I	5	8	NEVER
IST1221I	5	2	NEVER
IST1222I	4	2	WARN
IST1223I	5	2	NEVER
IST1224I	5	2	NEVER
IST1225I	5	2	NEVER
IST1226I	5	2	WARN
IST1227I	5	2	NEVER
IST1228I	5	2	WARN
IST1229I	5	2	WARN
IST1230I	4	2	NEVER
IST1231I	4	2	NEVER
IST1232I	4	2	NEVER
IST1233I	4	2	NEVER
IST1234I	4	2	NEVER
IST1235I	4	2	NEVER
IST1236I	5	2	NEVER
IST1237I	5	2	NEVER
IST1238I	5	2	NEVER
IST1239I	5	2	NEVER

Message identifier	Descriptor code	Routing code	Suppression level
IST1240I	5	2	NEVER
IST1241I	5	2	NEVER
IST1242I	5	2	NEVER
IST1243I	5	2	NEVER
IST1244I	5	2	NEVER
IST1245I	5	2	SER
IST1246I	5	2	SER
IST1247I	5	2	SER
IST1248I	5	2	NEVER
IST1249I	5	2	WARN
IST1250I	5	2	NEVER
IST1251I	5	2	NEVER
IST1252I	5	2	NEVER
IST1253I	5	2	NEVER
IST1254I	5	2	NEVER
IST1255I	5	2	NEVER
IST1256I	5	2	NEVER
IST1257I	5	2	WARN
IST1258I	5	2	WARN
IST1259I	5	2	WARN
IST1260I	5	2	WARN
IST1261I	3	2	NEVER
IST1262I	5	2	NEVER
IST1263I	5	2	WARN
IST1264I	5	2	SER
IST1265I	5	2	SER
IST1266I	5	2	INFO
IST1267I	5	2	SER
IST1268I	5	2	NORM
IST1269I	5	2	SER
IST1270I	5	2	SER
IST1271I	5	2	INFO
IST1272I	5	2	WARN
IST1273I	5	2	SER
IST1274I	5	2	SER
IST1275I	5	2	NORM
IST1276I	5	8	NEVER
IST1277I	5	2	NORM
IST1278I	4	8	INFO
IST1279I	5	2	WARN

VTAM Operator Messages

Message identifier	Descriptor code	Routing code	Suppression level
IST1280I	5	2	SER
IST1281I	5	8	SER
IST1282I	4	2	INFO
IST1283I	5	2	NEVER
IST1284I	5	2	NEVER
IST1285I	5	2	NORM
IST1286I	5	2	INFO
IST1287I	5	2	INFO
IST1288I	5	2	WARN
IST1289I	5	2	INFO
IST1290I	5	2	INFO
IST1291I	5	2	NEVER
IST1292I	5	2	NEVER
IST1293I	5	2	NEVER
IST1294I	5	2	INFO
IST1295I	5	2	NEVER
IST1296I	5	2	NEVER
IST1297I	5	2	NEVER
IST1298I	5	2	NEVER
IST1299I	5	2	NEVER
IST1300I	5	2	NEVER
IST1301I	5	2	NEVER
IST1302I	5	2	NEVER
IST1303I	5	2	NEVER
IST1304I	5	2	NEVER
IST1305I	5	2	NEVER
IST1306I	5	2	NEVER
IST1307I	5	2	NEVER
IST1308I	5	2	NEVER
IST1309I	5	2	NEVER
IST1310I	5	2	NEVER
IST1311A	1	2	NEVER
IST1312I	5	2	NEVER
IST1313I	5	2	NEVER
IST1314I	5	2	NEVER
IST1315I	5	2	NEVER
IST1316I	5	2	NEVER
IST1317I	5	2	NEVER
IST1318I	5	2	NEVER
IST1319I	5	2	NEVER

Message identifier	Descriptor code	Routing code	Suppression level
IST1320I	5	2	SER
IST1321I	5	2	NEVER
IST1322I	5	2	NEVER
IST1323I	5	2	NEVER
IST1324I	5	2	NEVER
IST1325I	5	2	NEVER
IST1326I	5	2	NEVER
IST1327I	5	2	NEVER
IST1328I	5	2	NEVER
IST1329I	5	2	NEVER
IST1330I	5	2	INFO
IST1331I	5	2	SER
IST1332I	5	2	WARN
IST1333I	5	2	NEVER
IST1334I	5	2	WARN
IST1335I	5	2	WARN
IST1336I	5	2	INFO
IST1337I	5	2	INFO
IST1338I	5	2	INFO
IST1340I	5	2	INFO
IST1341I	5	2	INFO
IST1342I	5	8	NEVER
IST1343I	5	8	NEVER
IST1344I	5	8	NEVER
IST1345I	5	2	NEVER
IST1346I	5	2	WARN
IST1347I	5	2	NORM
IST1348I	5	2	NEVER
IST1349I	5	2	NEVER
IST1350I	5	2	WARN
IST1351I	5	2	NEVER
IST1352I	5	2	NEVER
IST1353I	5	2	NEVER
IST1354I	5	2	NEVER
IST1355I	5	2	NEVER
IST1356I	5	2	SER
IST1357I	5	2	NEVER
IST1358I	5	2	NEVER
IST1359I	5	2	NEVER
IST1360I	5	2	NEVER

Message identifier	Descriptor code	Routing code	Suppression level
IST1361I	5	2	SER
IST1362I	5	2	WARN
IST1363I	5	2	NEVER
IST1364I	5	2	NEVER
IST1365I	5	2	WARN
IST1366I	5	2	WARN
IST1367I	5	2	NEVER
IST1368I	5	2	NEVER
IST1369I	5	2	NEVER
IST1370I	5	2	NEVER
IST1371I	5	2	NEVER
IST1372I	5	2	NEVER
IST1373I	5	2	NEVER
IST1374I	5	2	NEVER
IST1375I	5	2	NEVER
IST1376I	5	2	NEVER
IST1377I	5	2	NEVER
IST1378I	5	8	NEVER
IST1380I	5	2	WARN
IST1381I	5	2	WARN
IST1382I	5	2	NEVER
IST1383I	5	2	NEVER
IST1385I	5	2	INFO
IST1386I	5	2	INFO
IST1387I	5	2	WARN
IST1388I	5	2	WARN
IST1389I	5	2	WARN
IST1390I	5	2	NEVER
IST1391I	5	2	NORM
IST1392I	5	2	NORM
IST1393I	5	2	NEVER
IST1394I	4	8	SER
IST1395I	5	2	NEVER
IST1396I	5	2	SER
IST1397I	5	2	SER
IST1398I	5	2	SER
IST1399I	5	2	SER
IST1400I	5	8	NEVER
IST1401I	5	2	NEVER
IST1402I	5	2	NEVER

Message identifier	Descriptor code	Routing code	Suppression level
IST1403I	5	2	NEVER
IST1404I	5	2	NEVER
IST1405I	5	2	NEVER
IST1406I	5	8	NEVER
IST1407I	4	8	NEVER
IST1408I	5	2	NEVER
IST1409I	5	2	NEVER
IST1410I	5	2	NEVER
IST1411I	4	8	WARN
IST1412I	4	8	INFO
IST1413I	5	2	NORM
IST1414I	5	2	NORM
IST1415I	5	2	NEVER
IST1416I	4	2,8	WARN
IST1417I	3	2	NEVER
IST1418I	5	2	NEVER
IST1419I	5	2	INFO
IST1420I	5	2	INFO
IST1421I	5	8	WARN
IST1422I	5	2	NEVER
IST1423I	2	5	SER
IST1424I	5	2	NEVER
IST1425I	5	2	NEVER
IST1426I	5	2	NEVER
IST1427I	5	2	NEVER
IST1430I	8	4	INFO
IST1431I	5	2	NEVER
IST1432I	5	8	NEVER
IST1433I	2	5	SER
IST1434I	5	2	NEVER
IST1435I	5	2	NEVER
IST1436I	4	8	INFO
IST1437I	5	2	INFO
IST1438I	5	2	NEVER
IST1439I	11	2	NEVER
IST1440I	5	2	INFO
IST1441I	5	2	INFO
IST1442I	5	2	INFO
IST1443I	5	2	WARN
IST1444I	5	2	WARN

VTAM Operator Messages

Message identifier	Descriptor code	Routing code	Suppression level
IST1445I	5	8	NEVER
IST1446I	5	2	WARN
IST1447I	5	2	NEVER
IST1449I	3	2	INFO
IST1450I	5	2	NEVER
IST1451I	5	2	NEVER
IST1452I	3	2	INFO
IST1453I	5	2	NEVER
IST1454I	5	2	NEVER
IST1455I	4	2	INFO
IST1456I	4	2	INFO
IST1457I	5	2	NEVER
IST1458I	5	2	NEVER
IST1459I	5	2	NEVER
IST1460I	5	2	NEVER
IST1461I	5	2	NEVER
IST1462I	5	2	NEVER
IST1463I	5	2	NEVER
IST1464I	5	2	NEVER
IST1465I	5	2	NEVER
IST1466I	5	2	NEVER
IST1467I	5	2	NEVER
IST1468I	5	2	NEVER
IST1469I	5	2	NEVER
IST1470I	5	2	NEVER
IST1471I	5	2	NEVER
IST1472I	5	2	NEVER
IST1473I	5	2	NEVER
IST1474I	5	2	NEVER
IST1475I	3	2	NEVER
IST1476I	5	2	NEVER
IST1477I	5	2	NEVER
IST1478I	5	2	NEVER
IST1479I	5	2	NEVER
IST1480I	5	2	NEVER
IST1481I	5	2	NEVER
IST1482I	5	2	NEVER
IST1483I	5	2	NEVER
IST1484I	5	2	NEVER
IST1485I	5	2	NEVER

Message identifier	Descriptor code	Routing code	Suppression level
IST1486I	5	2	NEVER
IST1487I	5	2	NEVER
IST1488I	5	2	NEVER
IST1489I	5	2	NEVER
IST1490I	5	2	NEVER
IST1493I	5	2	NEVER
IST1494I	5	2	NEVER
IST1495I	5	2	NEVER
IST1496I	5	2	SER
IST1497I	5	2	NEVER
IST1498I	5	2,8	NEVER
IST1499I	4	2	NEVER
IST1500I	5	8	NEVER
IST1509I	5	2	NEVER
IST1510I	5	2	NEVER
IST1511I	5	2	NEVER
IST1514I	5	2	NEVER
IST1515I	5	2	NORM
IST1516I	5	2	NEVER
IST1517I	5	2	NEVER
IST1518I	5	2	NEVER
IST1519I	5	2	NEVER
IST1520I	5	2	NEVER
IST1521I	5	2	NEVER
IST1522I	5	2	NEVER
IST1523I	5	2	NEVER
IST1524I	5	2	NEVER
IST1525I	5	2	NEVER
IST1526I	5	2	NEVER
IST1527I	5	2	NEVER
IST1528I	5	2	NEVER
IST1529I	5	2	NEVER
IST1530I	5	2	NEVER
IST1531I	5	2	NEVER
IST1532I	5	2	NEVER
IST1533I	5	2	NEVER
IST1534I	5	2	NEVER
IST1535I	5	2	NEVER
IST1536I	5	2	NEVER
IST1537I	5	2	NEVER

Message identifier	Descriptor code	Routing code	Suppression level
IST1538I	5	2	NEVER
IST1539I	5	2	NEVER
IST1540I	5	2	NEVER
IST1541I	5	2	NEVER
IST1542I	5	2	NEVER
IST1543I	5	2	NEVER
IST1544I	4	8	SER
IST1545I	5	2	NEVER
IST1546I	5	2	NEVER
IST1547I	5	2	NEVER
IST1548I	5	2	NEVER
IST1549I	5	2	NEVER
IST1550I	5	2	NEVER
IST1551I	5	2	NEVER
IST1552I	5	2	NEVER
IST1553I	5	2	NEVER
IST1554I	5	2	NEVER
IST1555I	5	2	NEVER
IST1556I	5	2	SER
IST1557I	5	2	NEVER
IST1558I	5	2	SER
IST1559I	5	2	NEVER
IST1560I	5	2	NEVER
IST1561I	5	2	NEVER
IST1562I	5	2	SER
IST1563I	5	2	NEVER
IST1564I	5	2	NEVER
IST1565I	5	2	NEVER
IST1566I	5	2	NEVER
IST1567I	5	2	NEVER
IST1568I	4	2	NEVER
IST1569I	4	2	NEVER
IST1570I	4	2	NEVER
IST1571I	5	8	NEVER
IST1572I	5	8	NEVER
IST1573I	5	8	NEVER
IST1574I	5	8	NEVER
IST1575I	5	2	NEVER
IST1576I	5	2	NEVER
IST1577I	5	2	NEVER

Message identifier	Descriptor code	Routing code	Suppression level
IST1578I	5	2	NEVER
IST1579I	5	2	NEVER
IST1580I	5	8	SER
IST1582I	5	8	SER
IST1583I	5	8	SER
IST1584I	5	8	SER
IST1585I	5	8	SER
IST1586I	5	8	SER
IST1587I	5	2	NEVER
IST1588I	5	2	NEVER
IST1589I	9	8	NEVER
IST1590I	5	2	SER
IST1591I	5	2	SER
IST1592I	5	2	SER
IST1593I	5	2	SER
IST1594I	5	2	SER
IST1595I	5	2	SER
IST1596I	5	2	SER
IST1597I	5	2	SER
IST1598I	5	2	SER
IST1599I	5	2	SER
IST1600I	5	2	SER
IST1601I	3	2	SER
IST1602I	5	2	SER
IST1603I	5	2	SER
IST1604I	5	2	SER
IST1605I	5	2	SER
IST1606I	5	2	SER
IST1607I	5	2	SER
IST1608I	5	2	SER
IST1609I	5	2	SER
IST1610I	5	2	SER
IST1611I	5	2	SER
IST1612I	5	2	SER
IST1613I	4	2	NEVER
IST1614I	4	2	NEVER
IST1615I	4	2	NEVER
IST1616I	4	2	NEVER
IST1617I	4	2	NEVER
IST1618I	4	2	NEVER

Message identifier	Descriptor code	Routing code	Suppression level
IST1619I	4	2	NEVER
IST1621I	5	2	SER
IST1622I	5	2	NEVER
IST1623I	5	2	NEVER
IST1624I	5	2	NEVER
IST1625I	5	8	NEVER
IST1626I	5	2	INFO
IST1627I	5	2	INFO
IST1628I	5	2	INFO
IST1629I	5	2	NEVER
IST1630I	5	2	SER
IST1631I	5	2	SER
IST1632I	5	2	NEVER
IST1633I	5	2	NEVER
IST1634I	5	2	NEVER
IST1635I	5	2	NEVER
IST1636I	5	2	NEVER
IST1637I	5	2	NEVER
IST1638I	5	2	NEVER
IST1639I	5	2	NEVER
IST1640I	5	2	NEVER
IST1641I	5	2	NEVER
IST1642I	5	2	NEVER
IST1643I	5	2	NEVER
IST1644I	5	2	NEVER
IST1645I	5	2	NEVER
IST1646I	4	2	SER
IST1647I	4	2	SER
IST1648I	4	2	SER
IST1649I	5	2	NEVER
IST1650I	5	8	SER
IST1651I	5	8	SER
IST1652I	5	8	SER
IST1653I	4	2	NEVER
IST1654I	4	2	NEVER
IST1655I	4	2	NEVER
IST1656I	5	8	INFO
IST1657I	5	8	INFO
IST1658I	5	8	SER
IST1659I	5	2	NORM

Message identifier	Descriptor code	Routing code	Suppression level
IST1660I	3	2,9	NEVER
IST1661I	5	2	NEVER
IST1662I	5	2	NEVER
IST1663I	5	2	NEVER
IST1664I	5	2	NEVER
IST1668I	5	2	NEVER
IST1669I	5	2	NEVER
IST1670I	5	2	NEVER
IST1671I	5	2	NEVER
IST1672I	4	2	NEVER
IST1674I	4	2	NEVER
IST1675I	4	2	NEVER
IST1676I	4	2	NEVER
IST1679I	5	2	INFO
IST1680I	5	2	INFO
IST1681I	5	2	INFO
IST1682I	5	2	SER
IST1683I	5	2	SER
IST1684I	5	2	SER
IST1685I	5	2	INFO
IST1686I	5	2	SER
IST1687I	5	2	SER
IST1688I	5	2	WARN
IST1689I	5	2	NEVER
IST1690I	5	2	NEVER
IST1691I	5	2	NEVER
IST1692I	5	8	NEVER
IST1693I	5	8	WARN
IST1694I	4	8	INFO
IST1695I	5	2	NEVER
IST1696I	5	2	NEVER
IST1697I	5	2	NEVER
IST1698I	5	2	WARN
IST1700I	5	2	WARN
IST1701I	5	2	INFO
IST1702I	5	2	INFO
IST1703I	5	2	INFO
IST1704I	5	2	NEVER
IST1705I	5	2	NEVER
IST1706I	5	2	NEVER

Message identifier	Descriptor code	Routing code	Suppression level
IST1707I	5	2	NEVER
IST1708I	5	2	NEVER
IST1709I	5	2	NEVER
IST1710I	5	2	NEVER
IST1711I	5	2	NEVER
IST1713I	5	2	NEVER
IST1714I	5	2	NEVER
IST1715I	5	8	NEVER
IST1716I	5	8	NEVER
IST1717I	5	8	NEVER
IST1718I	5	2	NEVER
IST1719I	5	2	NEVER
IST1720I	5	2	NEVER
IST1721I	5	2	NEVER
IST1722I	5	2	NEVER
IST1723I	5	2	NEVER
IST1724I	5	8	NEVER
IST1725E	5	2	NEVER
IST1726I	5	2	NEVER
IST1727I	5	2	NEVER
IST1728I	5	2	NEVER
IST1729I	5	2	NORM
IST1730I	5	2	NORM
IST1731I	5	2	SER
IST1732I	4	2	NEVER
IST1733I	5	2	NORM
IST1734I	4	2	NEVER
IST1736I	5	2	NEVER
IST1737I	5	2	NEVER
IST1738I	5	2	NEVER
IST1739I	5	2	NEVER
IST1740I	5	2	NEVER
IST1741I	4	2	SER
IST1743I	5	2	WARN
IST1744I	5	2	WARN
IST1745I	2	5	SER
IST1746I	5	2	NEVER
IST1747I	5	2	NEVER
IST1748I	5	2	NEVER
IST1749I	2	5	SER

Message identifier	Descriptor code	Routing code	Suppression level
IST1750I	5	2	NEVER
IST1751I	5	2	NEVER
IST1752I	5	2	NEVER
IST1753I	5	2	NEVER
IST1754I	5	2	NEVER
IST1755I	5	2	NEVER
IST1756I	5	2	NEVER
IST1757I	5	2	NEVER
IST1758I	5	2	NEVER
IST1759I	5	2	NEVER
IST1760I	5	2	NEVER
IST1761I	5	8	SER
IST1762I	5	2	NEVER
IST1763I	5	2	INFO
IST1764I	5	2	INFO
IST1765I	5	2	INFO
IST1766I	5	2	INFO
IST1767I	5	2	INFO
IST1768I	5	2	INFO
IST1769I	5	2	INFO
IST1770I	5	2	INFO
IST1771I	5	2	INFO
IST1772I	5	2	INFO
IST1773I	5	2	NEVER
IST1774I	4	8	WARN
IST1775I	4	8	WARN
IST1776I	5	2	INFO
IST1777I	5	2	INFO
IST1778I	5	2	INFO
IST1779I	5	2	INFO
IST1780I	5	2	INFO
IST1781I	5	2	INFO
IST1782I	5	2	INFO
IST1783I	5	2	INFO
IST1784I	5	2	INFO
IST1785I	5	2	INFO
IST1786I	5	2	NEVER
IST1787I	5	2	NEVER
IST1788I	5	2	NEVER
IST1789I	5	2	NEVER

Message identifier	Descriptor code	Routing code	Suppression level
IST1790I	5	2	NEVER
IST1791I	5	2	NEVER
IST1792I	5	2	NEVER
IST1793I	5	2	NEVER
IST1794I	5	2	NEVER
IST1795I	5	2	NEVER
IST1796I	5	2	NEVER
IST1797I	5	2	NEVER
IST1798I	5	2	INFO
IST1799I	5	2	SER
IST1800I	5	2	NEVER
IST1801I	5	2	NEVER
IST1802I	5	2	NEVER
IST1803I	5	2	INFO
IST1804I	5	2	INFO
IST1805I	5	2	INFO
IST1806I	5	2	NEVER
IST1807I	5	2	NEVER
IST1809I	5	2	INFO
IST1810I	5	2	NEVER
IST1811I	5	2	NEVER
IST1812I	5	2	NEVER
IST1813I	5	2	NEVER
IST1814I	5	2	NEVER
IST1815I	5	2	NEVER
IST1816I	5	2	NEVER
IST1817I	5	2	NEVER
IST1818I	5	2	NEVER
IST1819I	5	2	NEVER
IST1820I	5	2	NEVER
IST1821I	5	2	NEVER
IST1822I	5	2	NEVER
IST1823I	5	2	NEVER
IST1824I	5	2	NEVER
IST1825I	5	2	NEVER
IST1826I	5	2	NEVER
IST1827I	5	2	NEVER
IST1828I	5	2	NEVER
IST1829I	5	2	NEVER
IST1830I	5	2	NEVER

Message identifier	Descriptor code	Routing code	Suppression level
IST1831I	5	2	NEVER
IST1832I	3	2	WARNING
IST1833I	3	2	WARNING
IST1834I	5	2	NEVER
IST1835I	5	2	NEVER
IST1836I	5	2	NEVER
IST1837I	5	2	NEVER
IST1838I	5	2	NEVER
IST1839I	5	2	NEVER
IST1841I	5	2	NEVER
IST1842I	5	2	NEVER
IST1843I	5	2	NEVER
IST1844I	5	2	NEVER
IST1845I	5	2	NEVER
IST1846I	5	2	NEVER
IST1847I	5	2	NEVER
IST1848I	5	2	NEVER
IST1849I	5	2	NEVER
IST1850I	5	2	NEVER
IST1851I	5	2	NEVER
IST1852I	5	2	NEVER
IST1853I	5	2	NEVER
IST1854I	5	2	NEVER
IST1855I	5	2	NEVER
IST1856I	5	2	NEVER
IST1857I	5	2	NEVER
IST1858I	5	2	NEVER
IST1859I	5	2	NEVER
IST1860I	5	2	NEVER
IST1861I	5	2	NEVER
IST1862I	5	2	NEVER
IST1863I	5	2	NEVER
IST1864I	5	2	NEVER
IST1865I	5	2	NEVER
IST1866I	5	2	NEVER
IST1867I	5	2	NEVER

ISU VTAM operator messages

Messages ISU1536I and ISU1537I are never suppressed. All of the other ISU messages can be suppressed by the user.

MVS identifier	Descriptor code	Routing codes	
ISU1500I	none	11	
ISU1501I	none	11	
ISU1502I	none	11	
ISU1503I	none	11	
ISU1504I	none	11	
ISU1505I	none	11	
ISU1506I	none	11	
ISU1507I	none	11	
ISU1508I	none	11	
ISU1509I	none	11	
ISU1510I	none	11	
ISU1511I	none	11	
ISU1512I	none	11	
ISU1513I	none	11	
ISU1514I	none	11	
ISU1515I	none	11	
ISU1516I	none	11	
ISU1517I	none	11	
ISU1518I	none	11	
ISU1519I	none	11	
ISU1520I	none	11	
ISU1521I	none	11	
ISU1522I	none	11	
ISU1523I	none	11	
ISU1524I	none	11	
ISU1525I	none	11	
ISU1526I	none	11	
ISU1527I	none	11	
ISU1528I	none	11	
ISU1529I	none	11	
ISU1530I	none	11	
ISU1531I	none	11	
ISU1532I	none	11	
ISU1533I	none	11	
ISU1534I	none	11	
ISU1535I	none	11	
ISU1536I	1	2,11	
ISU1537I	none	2,11	

MVS identifier	Descriptor code	Routing codes	
ISU1538I	none	11	
ISU1540I	none	11	
ISU1541I	none	11	
ISU1542I	none	11	
ISU1543I	none	11	
ISU1544I	none	11	
ISU1545I	none	11	
ISU1548I	none	11	
ISU1549I	none	11	
ISU1550I	none	11	
ISU1551I	none	11	
ISU1552I	none	11	
ISU1554I	none	11	
ISU1555I	5	2	
ISU1556I	5	2	
ISU1557I	5	2	
ISU1558I	5	2	
ISU1559I	5	2	
ISU1560I	5	2	
ISU1561I	5	2	
ISU1562I	5	2	
ISU1563I	5	2	
ISU1564I	5	2	
ISU1565I	5	2	
ISU1576I	5	2	
ISU1577I	5	2	
ISU1578I	5	2	
ISU1579I	5	2	
ISU1580I	5	2	
ISU1581I	5	2	

IUT VTAM operator messages

MVS identifier	Descriptor code	Routing code	Suppression level
IUT5000I	4	2	NEVER
IUT5001I	6	2	NEVER
IUT5002I	4	2	NEVER

IVT VTAM operator messages

MVS identifier	Descriptor code	Routing code	Suppression level
IVT5501I	5	2	NEVER
IVT5502I	5	2	NEVER
IVT5503I	5	2	NEVER
IVT5504I	5	2	NEVER
IVT5505I	5	2	NEVER
IVT5506I	5	2	NEVER
IVT5507I	5	2	NEVER
IVT5508I	5	2	NEVER
IVT5510I	5	2	NEVER
IVT5511I	5	2	NEVER
IVT5512I	5	2	NEVER
IVT5513I	5	2	NEVER
IVT5516I	5	2	NEVER
IVT5517I	5	2	NEVER
IVT5518I	5	2	NEVER
IVT5519I	5	2	NEVER
IVT5520I	5	2	NEVER
IVT5521I	5	2	NEVER
IVT5529I	5	2	NEVER
IVT5530I	5	2	NEVER
IVT5531I	5	2	NEVER
IVT5532I	5	2	NEVER
IVT5533I	5	2	NEVER
IVT5534I	5	2	NEVER
IVT5535I	5	2	NEVER
IVT5536I	5	2	NEVER
IVT5538I	5	2	NEVER
IVT5539I	5	2	NEVER
IVT5541I	5	2	NEVER
IVT5549I	5	2	NEVER
IVT5551I	5	2	NEVER
IVT5553I	5	2	NEVER
IVT5554I	5	2	NEVER
IVT5556I	5	2	NEVER
IVT5557I	5	2	NEVER
IVT5558I	5	2	NEVER
IVT5559I	5	2	NEVER
IVT5560I	5	2	NEVER
IVT5561I	5	2	NEVER

MVS identifier	Descriptor code	Routing code	Suppression level
IVT5562I	5	2	NEVER
IVT5563I	5	2	NEVER
IVT5564I	5	2	NEVER
IVT5565I	5	2	NEVER
IVT5599I	5	2	NEVER
IVT5600I	5	2	WARN
IVT5602I	4	2	SER

Appendix D. Messages affected by the MSGLVL option

This appendix contains all messages affected by the MSGLVL Option.

General description

The MSGLEVEL start option or the MSGLVL operand on the USSMSG macro allows you to select the version of the message that VTAM issues.

- MSGLVL=BASE is the default and represents the pre-Version 4 message.
- MSGLVL=V4R1, MSGLVL=V4R2, or MSGLVL=V4R3 represents the new message or message group.

This option is valid only for those messages listed in this appendix.

See the *z/OS Communications Server: SNA Resource Definition Reference* for a description of the MSGLEVEL start option or the MSGLVL operand on the USSMSG macro.

Notes:

1. If you want the version 4 messages to be displayed, you must indicate MSGLVL=V4R1, V4R2, or V4R3.
2. If you use program operators that depend on the original BASE messages, you might want VTAM to issue the pre-Version 4 message to the program operators.

Differences between BASE and Version 4 messages

There are several differences between BASE and Version 4 messages:

Version 4 messages can display network-qualified resource names.
Resource variable fields were increased from 8 to 17 characters in the Version 4 messages to accommodate the display of network-qualified names. VTAM displays network-qualified names in the form *netid.name*.

BASE message might be replaced by more than one Version 4 message.
To provide more specific error information and to simplify automated operations, BASE messages might be replaced by more than one Version 4 message.

BASE messages IST059I, IST129I, and IST660I were replaced by more than one Version 4 message. See “Message text for BASE and Version 4 messages” on page 758 for more information.

Node type was added in Version 4.
To provide more detailed information about the type of resource, a *nodetype* variable field was added to several Version 4 messages and message groups.

Text and variable field wording might not be identical in BASE and Version 4 messages.
In most cases, increasing the resource variable field to 17 characters caused the Version 4 message to exceed the desired length. Therefore, to prevent truncation of message text on some systems, the text and variable field wording of the new Version 4 message might not be identical to the BASE message it replaces.

In some cases, the BASE message wording has been changed so that the meaning of the text or variable field information is more specific or descriptive.

© Copyright IBM Corp. 1984, 2002

Note: The wording of most of the reasons in IST225I (BASE) and IST1137I (Version 4) are not identical. The following table maps *reason* in IST225I to its Version 4 equivalent in IST1137I.

Table 3. Reasons in IST225I (BASE) and IST1137I (V4R1)

IST225I BASE (default)	**IST1137I version 4**
ALSNAME PARAMETER OMITTED	ALSNAME NOT GIVEN
ALSNAME NOT VALID	ALSNAME NOT VALID
CALL SECURITY ERROR	SECURITY DATA ERROR
CURRENT LEVEL HIGHER	MUST BE MORE SECURE
DYNAMIC CDRSC NOT VALID	CDRSC IS DYNAMIC
INSUFFICIENT STORAGE	STORAGE SHORTAGE
INVALID MODEL LU	MODEL LU NOT VALID
INVALID STATE FOR CDRSC	CDRSC NOT ACTIVE
NODE HAS NO KEY	NODE KEY UNDEFINED
NO SUITABLE RESOURCES FOUND	RESOURCES NOT FOUND
NOT AN APPLICATION PROGRAM	MUST BE APPLICATION
REJECTED BY INSTALLATION EXIT	INSTALL EXIT REJECT
SECURITY MANAGER ERROR	SECURITY ERROR
SECURITY MANAGER NOT AVAILABLE	SUPPORT UNAVAILABLE
SUBORDINATE NODE PENDING INACT	DEACTIVATE PENDING
UNABLE TO ALLOCATE CDRSC	CDRSC NOT ALLOCATED
VTAM ERROR	VTAM ABEND
EXIT IS NOT FOUND	EXIT IS NOT FOUND
FUNCTION NOT SUPPORTED	INSTALL PROGRAM
FUNCTION NOT OPERATIONAL	PROGRAM NOT ACTIVE

Message text for BASE and Version 4 messages

The message explanation provides a description of the variable information in the message text. See Chapter 5, “IST messages for VTAM network operators IST001I – IST399I” on page 33 for descriptions of the following messages.

Notes:

1. If you want the V4R1 messages to be displayed, you must indicate MSGLVL=V4R1 as a start option, even though you are running on a VTAM which is post-V4R1.
2. If MSGLVL=V4R2 is specified as a start option, the base messages that have no replacements will be displayed with the V4R1-level messages and the V4R2-level messages.

Message text for BASE and V4R2 or higher

BASE:

```
IST619I  ID = %8 FAILED - RECOVERY IN PROGRESS
```

V4R2:

```
IST1416I ID = %17 FAILED - RECOVERY IN PROGRESS
```

Message text for BASE and Version 4

BASE:

```
IST059I  %28 IGNORED - INSUFFICIENT STORAGE
```

Version 4:

```
IST1064I TRACE IGNORED, %17 - STORAGE SHORTAGE
IST1045I NODE TYPE = %17
IST314I  END
```

BASE:

```
IST059I  %28 IGNORED - INSUFFICIENT STORAGE
```

Version 4:

```
IST1128I PATH %8 IGNORED, %17 - STORAGE SHORTAGE
IST1045I NODE TYPE = %17
IST314I  END
```

BASE:

```
IST072I  %10 FOR ID = %8 FAILED DURING NETWORK DEFINITION
```

Version 4:

```
IST1264I %10 FOR %17 FAILED DURING DEFINITION
```

BASE:

```
IST073I  %10 FOR ID = %8 FAILED - MORE POWERFUL REQUEST IN PROGRESS
```

Version 4:

```
IST1129I %10 FAILED, %17 - DEACTIVATE PENDING
IST1045I NODE TYPE = %17
IST314I  END
```

BASE:

```
IST074I  %10 FOR ID = %8 FAILED - INSUFFICIENT STORAGE
```

Version 4:

```
IST1130I %10 FOR %17 FAILED - STORAGE SHORTAGE
IST1045I NODE TYPE = %17
IST314I  END
```

BASE:

```
IST082I  DEVTYPE = %24 %27
```

Version 4:

```
IST1131I DEVICE = %12 %35
IST1045I NODE TYPE = %17
IST314I  END
```

BASE:

```
IST093I  %8 ACTIVE
```

Version 4:

```
IST1132I %17 IS ACTIVE, TYPE = %17
```

BASE:

```
IST105I  %8 NODE NOW INACTIVE
```

Version 4:

```
IST1133I %17 IS NOW INACTIVE, TYPE= %8               %9
```

BASE:

```
IST113I  %8 IS A USERVAR WITH VALUE %8 IN NETWORK %8
```

Version 4:

```
IST1156I USERVAR %8 IN %8 HAS VALUE %17
```

BASE:

```
IST120I  NODE %8 NOW HAS CONTROLLING LU %8
```

Version 4:

```
IST1134I %17 NOW HAS CONTROLLING LU %9              %8
```

BASE:

```
IST129I  UNRECOVERABLE OR FORCED ERROR ON NODE %8 - VARY INACT SCHED
```

Version 4:

```
IST1135I FORCED VARY INACT SCHEDULED FOR %17
```

BASE:

```
IST129I  UNRECOVERABLE OR FORCED ERROR ON NODE %8 -VARY INACT SCHED
```

Version 4:

```
IST1136I VARY INACT %17 SCHEDULED - UNRECOVERABLE ERROR
```

BASE:

```
IST186I  %10 FOR ID = %8 CONTINUES COLD - CHECKPOINT DATA SET %15
```

Version 4:

```
IST1263I %10 FOR %17 FORCED COLD, %15
```

BASE:

```
IST187I  %10 FOR ID = %8 FAILED - CHECKPOINT DATA SET %15
```

Version 4:

```
IST1265I %10 FOR %17 FAILED - %15
```

BASE:

```
IST225I  %12 FOR ID = %8 FAILED - %30
```

Version 4:

```
IST1137I %11 FAILED, %17 - %19
```

BASE:

```
IST226I  %10 FOR ID = %8 NOT EFFECTIVE DURING CURRENT OR QUEUED SESSIONS
```

Version 4:

```
IST1266I %10 FOR %17 AFFECTS NEW SESSIONS ONLY
```

BASE:

```
IST234I  I/O ERROR %23
```

Version 4:

```
IST1211I I/O ERROR %17 %4 %4 %4
```

BASE:

```
IST262I  %8 = %8, STATUS = %10
```

Version 4:

```
IST1212I %8 = %17 STATUS = %10
```

BASE:

```
IST264I  REQUIRED %13 %8 %15
```

Version 4:

```
IST1138I REQUIRED %13 %32
```

BASE:

```
IST380I  ERROR FOR ID = %8 - REQUEST: %10, SENSE: %8
```

Version 4:

```
IST1139I %10 FOR %17 FAILED - SENSE: %8
IST1045I NODE TYPE = %17
IST314I  END
```

BASE:

```
IST381I  %10 FOR ID = %8 FAILED - CANNOT DEFINE NODE
```

Version 4:

```
IST1267I %10 FAILED - CANNOT DEFINE %17
```

BASE:

```
IST382I  %10 FOR ID = %8 FAILED - STATE: %5 NOT VALID FOR REQUEST
```

Version 4:

```
IST1140I %10 FAILED %17 - STATE %5 NOT VALID
IST1045I NODE TYPE = %17
IST314I  END
```

BASE:

```
IST383I  DEACTIVATION OF ID = %8 FAILED - REQUEST: %10 SENSE: %8
```

Version 4:

```
IST1268I %17 DEACTIVATION %10 FAILED: %8
```

BASE:

```
IST384I  %10 FOR ID = %8 FAILED
```

Version 4:

```
IST1269I %10 FOR %17 FAILED
```

BASE:

```
IST414I  %10 FOR ID = %8 FAILED - PROCESS UNAVAILABLE
```

Version 4:

```
IST1270I %10 FAILED - %17 NOT ACTIVE
```

BASE:

```
IST483I  %8 %10, CDRM = %8, NETID = %8
```

Version 4:

```
IST1276I %17 %10 CDRM = %8
```

BASE:

```
IST487I  %10 FOR ID = %8 SCHEDULED BY %10
```

Version 4:

```
IST1271I %10 FOR %17 SCHEDULED BY %10
```

BASE:

```
IST489I  %10 FOR ID = %8 CONTINUES - CANNOT DEFINE NODE: %8
```

Version 4:

```
IST1272I %8 %8 CONTINUES - %17 UNDEFINED
```

BASE:

```
IST490I  %10 FOR ID = %8 FAILED - %10 IN PROGRESS
```

Version 4:

```
IST1273I %10 %17 FAILED: %10 PENDING
```

BASE:

```
IST493I  %10 FOR ID = %8 OVERRIDDEN BY %10
```

Version 4:

```
IST1141I %10 FOR %17 OVERRIDDEN BY %10
```

BASE:

```
IST511I  TRACE REQUEST FAILED - %8 INVALID
```

Version 4:

```
IST1142I TRACE REQUEST FAILED - %17 NOT VALID
IST1045I NODE TYPE = %17
IST314I  END
```

BASE:

```
IST512I  TRACE TERMINATED FOR NODE = %8 %18
```

Version 4:

```
IST1143I TRACE TERMINATED FOR %17 %18
IST1045I NODE TYPE = %17
IST314I  END
```

BASE:

```
IST513I  TRACE INITIATED FOR NODE %8 %18
```

Version 4:

```
IST1144I TRACE INITIATED FOR %17 %18
IST1045I NODE TYPE = %17
IST314I  END
```

BASE:

```
IST530I  %10 PENDING %38
```

Version 4:

```
IST1436I RU PENDING:
IST1278I %10 PENDING %21 %26
```

BASE:

```
IST608I  %10 FOR ID = %8 FAILED - HIGHER NODE: %8 NOT ACTIVE
```

Version 4:

```
IST1274I %10 %17 FAILED: %8 NOT ACTIVE
```

BASE:

```
IST627I  %8 - INSUFFICIENT STORAGE
```

Version 4:

```
IST1145I TRACE REQUEST FAILED, %17 - STORAGE SHORTAGE
IST1045I NODE TYPE = %17
IST314I  END
```

BASE:

```
IST660I  %10 FOR ID = %8 FAILED - PARM: %15 NOT VALID
```

Version 4:

```
IST1146I %17 %10 U = %4 FAILED
```

BASE:

```
IST660I  %10 FOR ID = %8 FAILED - PARM: %15 NOT VALID
```

Version 4:

```
IST1147I %17 %8 LOGON= %17 FAILED
```

BASE:

```
IST660I  %10 FOR ID = %8 FAILED - PARM: %15 NOT VALID
```

Version 4:

```
IST1148I %17 %8 RNAME = %8 FAILED
```

BASE:

```
IST670I  VARY %4 PROCESSING FOR ID = %8 COMPLETE
```

Version 4:

```
IST1149I VARY %4 PROCESSING FOR NODE %17 COMPLETE
```

BASE:

```
IST674I  %10 FOR ID = %8 CONTINUES - PARM: %15 IGNORED
```

Version 4:

```
IST1275I %15 IGNORED ON %10 %17
```

BASE:

```
IST813I  USERVAR %8 CHANGED FROM %8 TO %8
```

Version 4:

```
IST1150I %8 CHANGED: %17 TO %17
```

BASE:

```
IST825I  USERVAR DEFINED - NAME = %8, VALUE = %8
```

Version 4:

```
IST1151I USERVAR %8 DEFINED: VALUE = %17
```

BASE:

```
IST886I  %11 %8 %8 %8 %11 %13 FAILED
```

Version 4:

```
IST1277I %11 %8 %8 %17 %11 %13 FAILED
```

BASE:

```
IST919I  NODE %8 NO LONGER HAS CONTROLLING LU %8
```

Version 4:

```
IST1152I %17 CONTROLLING LU %17 REMOVED
```

BASE:

```
IST930I  %16 - %16 SESSION USING %4 OF %2BUF
```

Version 4:

```
IST1153I %17 %17 SESSION %2BUF USE %4
```

BASE:

```
IST939I  VARY NOLOGON HAD NO EFFECT - %8 NOT FOUND FOR %8
```

Version 4:

```
IST1155I %17 VARY NOLOGON = %17 FAILED
```

BASE:

```
IST970I  LU-LU VERIFICATION ERROR %2 FOR %26
```

Version 4:

```
IST1213I %35 LU-LU VERIFY ERROR %2
```

BASE:

```
IST988I  %8 %8 %8 %8 %8 %8
```

Version 4:

```
IST1154I %17 %17 %17
```

BASE:

```
IST1082I GENERATED ADDRESS FOR %8 %11 FROM %8
```

Version 4:

```
IST1285I ADDRESS FOR %17 %11 FROM %8
```

Appendix E. Message text for VTAM operator messages

This appendix lists the text of VTAM operator messages for MVS/ESA.

For a description of variable information in the messages, see the message explanation in Chapter 5, “IST messages for VTAM network operators IST001I – IST399I” on page 33.

Note: Within the message text, a percent sign (%) represents a character that is reserved for variable information. The maximum length of the variable is indicated by a percent sign and a number (for example, %8). In some messages, if the variable information is shorter than the variable field, the extra blanks might be suppressed, causing the message text to shift to the left.

Message text for ELM logon manager network operator messages

The following table lists the message text for all ELM Logon Manager Network operator messages issued for MVS/ESA.

Message number	Text
ELM001I	REDEFINITION COMPLETE
ELM002I	LOGON MANAGER INITIALIZATION COMPLETED
ELM003I	NO SUBAREAS DETECTED IN CONFIGURATION DEFINITION
ELM004I	REDEFINITION IN PROGRESS —; COMMAND QUEUED
ELM005I	MEMBER REQUEST ACCEPTED
ELM006I	REDEFINITION IN PROGRESS
ELM007I	REDEFINITION UNSUCCESSFUL
ELM008I	REPLY TRUNCATED
ELM009I	STOP REQUEST ACCEPTED
ELM010I	INFO REQUEST ACCEPTED
ELM011I	MINLINK REQUEST ACCEPTED
ELM012I	SELECTED RESOURCE NOT FOUND
ELM013I	MINLINK REQUEST COMPLETED
ELM014I	NAME: TYP: STATUS: CURRENT: CONTROL: REASON: INITS:
ELM015I	NO PENDING RESOURCES FOUND
ELM016I	LOGON MANAGER CLOSEDOWN COMPLETED
ELM017I	REQUIRED STORAGE UNAVAILABLE
ELM018I	SA RECORD CAUSES MAXSUBA PARAMETER TO BE EXCEEDED
ELM019I	LMAPPL RECORD CAUSES MAXAPLC VALUE TO BE EXCEEDED
ELM020I	UNABLE TO ACCESS CONFIGURATION DEFINITION DATA SET MEMBER
ELM021I	ERROR ENCOUNTERED IN READING CONFIGURATION DEFINITION DATA SET MEMBER
ELM022I	HELP REQUEST ACCEPTED
ELM023I	VALID COMMAND PARAMETERS ARE:
ELM024I	HELP ...GET VALID COMMAND FORMATS
ELM025I	INFO,ID=NNNNNNNN ...GET STATUS FOR RESOURCE NAMED NNNNNNNN
ELM026I	INFO,ID=CLU ...GET STATUS FOR EACH CONTROL LOGICAL UNIT
ELM027I	INFO,ID=CLU,PEND ...GET STATUS FOR EACH PENDING CLU
ELM028I	INFO,ID=APPL ...GET STATUS FOR EACH SUPPORTED APPLICATION
ELM029I	INFO,ID=APPL,PEND ...GET STATUS FOR EACH PENDING APPL
ELM030I	INFO,ID=ALL ...GET STATUS FOR EACH CLU AND APPL
ELM031I	INFO,ID=ALL,PEND ...GET STATUS FOR EACH PENDING CLU AND APPL
ELM032I	MEMBER=MMMMMMMM ...PROCESS DEFINITION MEMBER MMMMMMMM

© Copyright IBM Corp. 1984, 2002

Message Text for ELM Logon Manager Network Operator Messages

Message number	Text
ELM033I	MINLINK=VVV,ID=ALL...SET MINLINK VALUE TO VVV (1–255)
ELM034I	FOR EACH SUPPORTED APPLICATION
ELM035I	MINLINK=VVV,ID=NNNNNNNN ...SET MINLINK VALUE FOR APPL NNNNNNNN
ELM036I	STOP ...REQUESTS CLOSEDOWN
ELM037I	LMAPPL RECORD IGNORED — WOULD CAUSE MAXAPLC LIMIT TO BE EXCEEDED
ELM040I	*name type status curop=curcnt conop=concnt reason inits*
ELM050I	SYNTAX ERROR [AFTER *keyword*] [AT *token*] IN *type*
ELM051I	INCORRECT VALUE SPECIFIED FOR *operand* IN *type*
ELM060I	NO VALID VALUE FOR PARAMETER *parameter* PROVIDED
ELM061I	CURRENT VALUE OF MEMBER PARAMETER IS *membername*
ELM062I	CURRENT VALUE OF MAXSUBA PARAMETER IS *value*
ELM063A	ENTER LOGON MANAGER START PARAMETERS (OR 'END')
ELM070I	*macro* FAILURE [FOR APPLICATION *applname*][,RETURN CODE *value*]
ELM075I	SESSION SETUP FOR *olu* TO *dlu* FAILED, SENSE = *code*
ELM080I	ATTACH FAILED FOR SUBTASK *taskname*
ELM081I	BUFFER STORAGE NOT AVAILABLE FOR RECEIVE FROM CLU *cluname*
ELM090I	SEND TO CLU *cluname* FAILED[, RC/FB=*value*]
ELM091I	RECEIVE FROM CLU *cluname* FAILED[, RC/FB=*value*]
ELM100I	ACB RELEASE-LEVEL VECTOR INDICATES INCORRECT VTAM LEVEL
ELM101A	ENTER 'CONTINUE' WHEN VTAM IS ACTIVE (OR 'END')
ELM110I	INITIALIZATION UNSUCCESSFUL

Message text for IKT TSO/VTAM network operator and terminal user messages

The following table lists the message text for all IKT TSO/VTAM Network Operator and Terminal User messages issued for MVS/ESA.

Message number	Text
IKT001D	*nnnn* USER(S) ACTIVE REPLY ‘U’, ‘SIC’, OR ‘FSTOP’
IKT002I	TCAS IS TERMINATING, REASON CODE=*code*
IKT003D	TCAS UNABLE TO ACCEPT LOGONS, REASON CODE=*code* REPLY ‘RETRY’ OR ‘TERM’
IKT004D	INVALID PARAMETERS SPECIFIED, RESPECIFY OR REPLY ‘U’
IKT005I	TCAS IS INITIALIZED
IKT006I	TCAS ENDED
IKT007I	TCAS ACCEPTING LOGONS
IKT008I	TCAS NOT ACCEPTING LOGONS
IKT009I	TPEND HAS OCCURRED, TCAS TERMINATION IN PROGRESS
IKT010D	*nnnnn* USER(S) ACTIVE, REPLY ‘SIC’ OR ‘FSTOP’
IKT011I	TCAS UNABLE TO {ACCEPT|QUIESCE} LOGONS, REASON CODE=*code*
IKT012D	TCAS TERMINATION IN PROGRESS — SPECIFY ‘U’ OR ‘DUMP’
IKT013I	PARAMETER FILE CANNOT BE OPENED - DEFAULT PARAMETERS USED
IKT014I	I/O ERROR READING MEMBER *member_name* - DEFAULT PARAMETERS USED
IKT015I	MODIFY COMMAND REJECTED, INVALID PARAMETERS SPECIFIED
IKT016D	INVALID REPLY — RESPECIFY
IKT017I	FILE FOR PRINTING TSO/VTAM TIME SHARING PARAMETERS CANNOT BE OPENED
IKT018I	I/O ERROR PRINTING TSO/VTAM TIME SHARING PARAMETERS, PRINTING STOPPED
IKT020I	TCAS CONSOLE COMMUNICATION TASK ABENDED, RECOVERY IN PROGRESS
IKT026D	TCAS ABEND IN PROGRESS — SPECIFY ‘U’ OR ‘DUMP’
IKT028I	RC= *aabbcc* SENSE= *code* TERMINAL *termid* CANNOT BE CONNECTED OR RELEASED BY VTAM
IKT029I	RC= *aabbcc* SENSE= *code* TERMINAL *termid* ABOUT TO BE RELEASED BY VTAM

Message Text for IKT TSO/VTAM Network Operator and Terminal User Messages

Message number	Text
IKT030I	TCAS LOGON PROCESS FAILURE PLU=*pluname* SLU=*sluname* [SENSE= *code*]
IKT031I	PARAMETER(S) SPECIFIED IN MEMBER *member_name* NOT VALID
IKT032I	*macro* FAILED FOR *gname* RPLRTNCD *aa* RPLFDB2 *bb*
IKT033I	TCAS USERMAX VALUE SET TO *count*
IKT100I	USERID *userid* CANCELED DUE TO UNCONDITIONAL LOGOFF
IKT103I	UNKNOWN ENTRY CODE *code* TO VTAM LOSTERM EXIT
IKT105I	LOGON REJECTED DUE TO INVALID APPLICATION ID
IKT106I	LOGON REJECTED, CANNOT OPEN ACB, ACBERFLG=X'*nn*
IKT109I	TSO/VTAM LOSTERM FAILED DUE TO VTAM SHORTAGE OF UECB/VRPL
IKT111I	APPLNAME=*applname* FAILED DUE TO: *reason*
IKT112I	{SEND|RECEIVE} ERROR DURING QUERY PROCESSING FOR *applname*,RPLRTNCD= *aa*,RPLFDB2= *bb*,SENSE=*code*
IKT115I	TSO UNABLE TO DISCONNECT TERMINAL *luname*
IKT116I	*userid* {SEND|RECEIVE} ERROR,RPLRTNCD= *aa*, RPLFDB2= *bb*, SENSE= *code*, WAITING FOR RECONNECTION *termid*
IKT117I	TSO/VTAM INITIALIZATION FAILED FOR APPLNAME=*applname*, LUNAME=*luname*
IKT118I	INVALID QUERY REPLY, TERMINAL ID: *termid*
IKT119I	*langcode* MESSAGES NOT AVAILABLE FOR LU *luname*, USING DEFAULT
IKT120I	CLOSE ACB FOR *applname* FAILED, CODE= *returncode*ERROR= *acberflag*
IKT121I	TCAS SEND/RECEIVE NOT POSTED FOR TERMINAL *termid*
IKT122I	IPADDR..PORT *ipaddr..portno*
IKT123I	DNS NAME: *dns_name*
IKT124I	*dns_name_continued*
IKT00201I	MAXIMUM USERS LOGGED ON, TRY LATER
IKT00202I	INSUFFICIENT STORAGE AVAILABLE FOR REQUIRED CONTROL BLOCKS
IKT00203I	ADDRESS SPACE CREATION FAILED
IKT00204I	LOGON FAILED, NO USER APPLID AVAILABLE
IKT00300I	LOGON RECONNECT SUCCESSFUL, SESSION ESTABLISHED
IKT00301I	LOGON RECONNECT UNSUCCESSFUL DUE TO SYSTEM ERROR
IKT00400I	INPUT DATA LOST
IKT00401I	OUTPUT DATA LOST
IKT00402I	REENTER DATA BEGINNING WITH *text*
IKT00403I	ERROR ON OUTPUT, RETRY IN PROGRESS
IKT00405I	SCREEN ERASURE CAUSED BY ERROR RECOVERY PROCEDURE

Message text for IST VTAM operator messages

The following table lists the message text for all IST VTAM operator messages issued for MVS/ESA.

Message number	Text
IST001I	`VTAM START REJECTED - %38`
IST003I	`ABEND OCCURRED DURING NETWORK DEFINITION OF CONFIG %8, CODE = %3`
IST009I	`VTAM ALREADY ACTIVE - START REJECTED`
IST010I	`%8 COMMAND INVALID`
IST011I	`%10 FOR %8 %24`
IST013I	`I/O ERROR FOR %8 IN %8`
IST015A	`ERROR PROCESSING LIST IDENTIFIER - ENTER LIST ID OR BLANK`
IST018I	`CONFIG COULD NOT BE INITIALIZED - VTAM START CONTINUES`
IST020I	`VTAM INITIALIZATION COMPLETE FOR %6`
IST025I	`BLDL FAILED FOR %8 IN %8`
IST033I	`%8 COMMAND CANCELLED`

Message Text for IST VTAM Operator Messages

Message number	Text
IST037I	%8 FAILED - SYNTAX ERROR
IST038I	VARY FAILED FOR ID = %8 - HOST CDRM IS NOT ACTIVE
IST039I	%8 FAILED - CANNOT IDENTIFY COMMAND TYPE
IST040I	START OPTION %8 REQUIRED - REENTER WHEN PROMPTED
IST043I	%8 INVALID VALUE FOR KEYWORD %8
IST049I	VTAM START REJECTED - %8 FOR %2 ACB FAILED
IST050I	%8 COMMAND REJECTED - OPEN FOR VTAM DATA SET %12 FAILED
IST051A	ENTER VTAM START PARAMETERS
IST052I	%8 IS AN INVALID START OPTION KEYWORD - IGNORED
IST054I	%8 IN %8 IS EMPTY - START PROCESSING CONTINUES
IST056A	LIST = %3 IS INVALID - ENTER LIST ID OR BLANK
IST057I	KEYWORD MISSING AFTER TRACE/NOTRACE OPTION ON START PARMS
IST058I	%8 AND %8 OPTIONS HAVE DUPLICATE VALUES
IST059I	%28 IGNORED - INSUFFICIENT STORAGE
IST061I	%10 FOR %17 FAILED - NODE UNKNOWN TO VTAM
IST066I	%10 FAILED - CONFLICTING OR INVALID OPTIONS
IST072I	%10 FOR ID = %8 FAILED DURING NETWORK DEFINITION
IST073I	%10 FOR ID = %8 FAILED - MORE POWERFUL REQUEST IN PROGRESS
IST074I	%10 FOR ID = %8 FAILED - INSUFFICIENT STORAGE
IST075I	NAME = %17, TYPE = %17
IST077I	SIO = %5 CUA = %4 %14
IST080I	%8 %10 %8 %10 %8 %10
IST081I	LINE NAME = %8, LINE GROUP = %8, MAJNOD = %8
IST082I	DEVTYPE = %24 %27
IST084I	NETWORK NODES:
IST085I	DISPLAY FAILED - INFORMATION NOT AVAILABLE
IST087I	TYPE = %19, CONTROL = %4
IST089I	%8 TYPE = %17, %10 %14
IST092I	REQUESTED %11 LESS THAN CURRENT ALLOCATION - REQUEST %8
IST093I	%8 ACTIVE
IST095A	OPTION TO DUMP %8 AVAILABLE - REPLY 'YES' OR 'NO' OR 'YES,DUMPSTA=LINKSTANAME'
IST096I	%8 FAILED - DUPLICATE %8 PARAMETERS SPECIFIED
IST097I	%8 ACCEPTED
IST101I	%8 FAILED - %8 NOT SPECIFIED
IST102I	VTAM IS NOW INACTIVE
IST105I	%8 NODE NOW INACTIVE
IST107I	TIME AND DATE NOT SET IN %8 DUE TO INVALID TIMER IN HOST
IST112I	VTAM INTERNAL TRACE MODIFY FAILED - CONFLICTING MODES
IST113I	%8 IS A USERVAR WITH VALUE %8 IN NETWORK %8
IST115I	INSUFFICIENT STORAGE TO READ %8 MEMBER OF VTAM DEFINITION LIBRARY
IST116I	MEMBER %8 NOT FOUND ON VTAM DEFINITION LIBRARY
IST117I	I/O ERROR READING %8 MEMBER OF VTAM DEFINITION LIBRARY
IST118I	ANOMALY FOUND NEAR RECORD %8 IN MEMBER %8 - CODE = %2
IST120I	NODE %8 NOW HAS CONTROLLING LU %8
IST122I	ATTACH OF VTAM SUBTASK %8 FAILED
IST124I	STOP COMMAND REJECTED - NOT SUPPORTED FOR VTAM
IST126I	%8 MODE NOT SUPPORTED DUE TO LOADING FAILURE
IST127I	%8 STILL ACTIVE - VTAM TERMINATION WAITING FOR %28
IST128I	HALT OF VTAM ALREADY IN PROGRESS
IST129I	UNRECOVERABLE OR FORCED ERROR ON NODE %8 - VARY INACT SCHED
IST130I	VTAM SUBTASK %8 INACTIVE - ABEND THRESHOLD EXCEEDED
IST132I	VTAM SUBTASK %8 NOT REATTACHED - CANNOT BE FOUND
IST133I	VTAM TERMINATION IN PROGRESS

Message number	Text
IST134I	GROUP = %8, MAJOR NODE = %8
IST135I	PHYSICAL UNIT = %8 %10
IST136I	%8 SNA MAJOR NODE = %8
IST137I	CONFIG %8 BYPASSED - LOCAL ADDRESS OF LU %8 IS INVALID
IST142I	CONFIG %8 BYPASSED - PATH MACRO %8 ERROR, REASON CODE %
IST146I	LINE NAME = %8, STATUS = %5
IST148I	DIAL OUT PATH INFORMATION FOR PHYSICAL UNIT %8
IST149I	LINE GRP TELEPHONE NUMBER OR LINE NAME PID GID CNT
IST150I	RRT LOAD MODULE %8 DOES NOT CONTAIN RESOURCE SEGMENT %9
IST153I	PENDING DEACTIVATION OF %8 OVERRIDDEN
IST154I	EXPANSION FAILED FOR %2 BUFFER POOL - CODE %2, USERID=%8
IST155I	SUBTASK %8 HAS ABENDED, CODE %3
IST159I	THE FOLLOWING NODES ARE IN A PENDING STATE
IST165I	CDRM %8 HAS AN INVALID ELEMENT VALUE - 1 IS ASSUMED
IST167I	NO DIAL OUT PATH FOR %8
IST168I	%8 %32 %11 %3 %3
IST169I	DISCONNECTION CAUSED VARY %5 FOR PU = %8
IST170I	LINES:
IST171I	ACTIVE SESSIONS = %10, SESSION REQUESTS = %10
IST172I	NO %21 %9
IST176I	%8 FAILED - %8 AND %8 ARE CONFLICTING OPTIONS
IST180I	OPEN FAILED ON CKPT DS %8 MAJ NODE %8 RTNCD = %2 %2
IST181I	CLOSE FAILED ON CKPT DS %8 MAJ NODE %8 RTNCD = %2 %2
IST182I	UNABLE TO GET STORAGE FOR CKPT %8 MAJOR NODE %8
IST183A	%8 FOUND LOADED WITH %8 - REPLY 'YES' TO REIPL OR 'NO' TO CONTINUE
IST184I	I/O ERROR ON CKPT DS %8 MAJOR NODE %8 RTNCD = %2 %2
IST185I	LOGICAL ERROR ON CHECKPOINT DS %8 MAJOR NODE %8
IST186I	%10 FOR ID = %8 CONTINUES COLD - CHECKPOINT DATA SET %15
IST187I	%10 FOR ID = %8 FAILED - CHECKPOINT DATA SET %15
IST191I	%8 SYNTAX ERROR
IST192I	POA MSG TRANSFER FAILED - INSUFFICIENT STORAGE
IST193I	REPLY %2 IGNORED - REPLY TOO LONG FOR REQUESTOR
IST194I	REPLY %2 NOT OUTSTANDING
IST195I	REPLY %2 IGNORED - NON-DECIMAL ID
IST198I	VTAM INTERNAL TRACE ACTIVATION FAILED - GTF NOT ACTIVE
IST199I	OPTIONS = %51
IST206I	SESSIONS:
IST208I	UNABLE TO TERMINATE SESSIONS FOR ID = %8 - INSUFFICIENT STORAGE
IST211I	NCP SLOWDOWN INITIATED FOR %8
IST212I	ACBNAME = %8
IST213I	ACBNAME FOR ID = %8
IST214I	NCP SLOWDOWN TERMINATED FOR %8
IST219I	I/O ERROR ON READ FOR %8 - BYTECNT MISMATCH
IST223I	MODIFY %8 COMMAND COMPLETED
IST225I	%12 FOR ID = %8 FAILED - %30
IST226I	%10 FOR ID = %8 NOT EFFECTIVE DURING CURRENT OR QUEUED SESSIONS
IST228I	ENCRYPTION = %11 , TYPE = %6
IST231I	%8 MAJOR NODE = %8
IST232I	%8 %10 %13
IST234I	I/O ERROR %23
IST238I	%10 %3 FOR ID = %8 RCVD %60
IST240A	WAIT STATE IN VTAM DUE TO INSUFFICIENT NUMBER OF I/O BUFFERS SPECIFIED BY USER
IST241I	%10 COMMAND COMPLETE FOR %17

Message Text for IST VTAM Operator Messages

Message number	Text
IST242I	%10 COMMAND FAILED FOR ID = %8 SENSE = %8
IST243I	FRAMES SENT = %5, RCVD = %5, RCVD WITHOUT ERRORS = %5
IST244I	NCP %11 STORAGE FOR ID = %8
IST245I	%6 %8 %8 %8 %8
IST247I	LOAD/DUMP PROCEDURE STATUS = %5 %19
IST257I	VTAM SDUMP FAILED WITH RETURN CODE %2 REASON X'%2'
IST258I	STMT IN ERROR = %80
IST259I	INOP RECEIVED FOR %8 CODE = %2 %50
IST260I	%8 - %8 SESSION LOST, SA %10 CODE %2
IST262I	%8 = %8, STATUS = %10
IST264I	REQUIRED %13 %8 %15
IST265I	%10 FOR ID = %8 FAILED - DUP %8 HL %8
IST266I	%8 STARTED
IST270I	LOAD OF %8 COMPLETE - LOAD MODULE = %7
IST271I	JOBNAME = %8, STEPNAME = %8, DSPNAME = %8
IST272A	NO INITIAL TEST FOR %8 - REPLY 'U' TO BYPASS - OR CANCEL
IST278A	INVALID REPLY FOR ID = %8 LOAD - ENTER 'U' - OR CANCEL
IST282A	INVALID REPLY FOR ID = %8 %10 %40
IST284A	OPTION TO RELOAD %8 AVAILABLE - REPLY 'YES' OR 'NO' OR 'YES,LOADSTA=LINKSTANAME'
IST285I	%8 DUMP OF %8 %34
IST302I	INVALID DEFINITION TYPE IN MEMBER %8 IN VTAM DEFINITION LIBRARY
IST303I	INSUFFICIENT STORAGE TO BUILD CONFIGURATION %8
IST309I	UNABLE TO LOAD MODULE %8 FROM LIBRARY %8
IST310I	INVALID SPACE REQUEST FOR CONFIGURATION %8
IST311I	NCP LOAD MODULE LIBRARY %8 - FAILED TO OPEN
IST314I	END
IST315I	VTAM INTERNAL TRACE ACTIVE - MODE = %3, SIZE = %3
IST316I	%13 TRACE USER OPTIONS ARE NOT ACTIVE
IST317I	VTAM INTERNAL TRACE ACTIVATION FAILED - INSUFFICIENT STORAGE
IST318I	VTAM INTERNAL TRACE ACTIVATION FAILED - UNABLE TO FIX STORAGE
IST319I	CONFIGURATION %8 FIRST SPECIFICATION USED %22
IST320I	CONFIGURATION %8 DEFINITION FAILED - %20
IST321I	CONFIGURATION %8 DEFAULT TAKEN - %22
IST322I	CONFIGURATION %8 ERROR IGNORED - %22
IST323I	LABEL = %8 - MACRO TYPE = %8 - KEYWORD = %8
IST324I	%8 IN PROGRESS WITH ID = %8 DUE TO %10 REQUEST
IST326I	REQUEST = %10 FAILED FOR %8 ID = %8, SENSE = %8
IST327I	%8 ID = %8 INCOMPLETE, REQUEST = %10, SENSE = %8
IST328I	COMMUNICATION WITH CDRM ID = %8 LOST
IST330I	TABLE TYPE = %8 NAME = %8
IST331I	CONFIG %8 BYPASSED - 'MAXSUBA' VALUES CONFLICT
IST333I	CONFIG %8 USING DUPLICATE RESOURCE NAME %8 - CODE %
IST336I	THIS NCP MAJOR NODE WAS %28
IST339I	CONFIG %8 BYPASSED - %8 UNKNOWN TO THE NCP
IST348I	UNABLE TO PROCESS DISCONNECTION FOR PU = %8 DUE TO LACK OF STORAGE
IST350I	DISPLAY TYPE = %24
IST351I	LOCAL 3270 MAJOR NODE = %8
IST352I	LOCAL SNA MAJOR NODE = %8
IST353I	SWITCHED SNA MAJOR NODE = %8
IST354I	PU T4/5 MAJOR NODE = %8
IST355I	LOGICAL UNITS:
IST356I	%11 %6 %6 %12 %5 %5/%5 %5
IST359I	ATTACHMENT = %8

Message number	Text
IST360I	APPLICATIONS:
IST361A	%19 FOUND LOADED WITH %19 REPLY 'YES' TO RELOAD OR 'NO' TO CANCEL ACTIVATION
IST362I	GROUP %8 DEVICES UNAVAILABLE - MISSING SYSCNTRL OPTION
IST363I	CONFIG %8 NODES AND SUBNODES SET UNAVAILABLE - %22
IST366I	CONFIG %8 UNABLE TO DEFINE %8 - MAXIMUM NUMBER OF NETWORK ADDRESSES FOR HOST SUBAREA EXCEEDED
IST367I	NO STORAGE TO DEFINE NODE %8 CONFIG %8
IST368I	FUNCTION GROUP %8 FAILED
IST380I	ERROR FOR ID = %8 - REQUEST: %10, SENSE: %8
IST381I	%10 FOR ID = %8 FAILED - CANNOT DEFINE NODE
IST382I	%10 FOR ID = %8 FAILED - STATE: %5 NOT VALID FOR REQUEST
IST383I	DEACTIVATION OF ID = %8 FAILED - REQUEST: %10 SENSE: %8
IST384I	%10 FOR ID = %8 FAILED
IST388I	DYNAMIC CDRSC DEFINITION SUPPORT = %3
IST389I	PREDEFINITION OF CDRSC = %3
IST391I	ADJ LINK STATION = %8, LINE = %8, NODE = %8
IST393I	PU T4/5 MAJOR NODE %8, SUBAREA = %10
IST394I	ADJACENT LINK STATIONS NOT OWNED BUT AWAITING ACTIVATION
IST395I	%8 %8 %8 %8 %8 %8
IST396I	LNKSTA STATUS CTG GTG ADJNODE ADJSA NETID ADJLS
IST397I	%8 %10 %3 %3 %8 %5 %8 %7%
IST398I	LOAD OF %8 FAILED - %8 HAS ZERO ENTRY POINT
IST399E	ISTSDCOS IS NOT A CLASS OF SERVICE TABLE - ISTSDCOS DELETED
IST400I	TERMINATION IN PROGRESS FOR APPLID %8
IST401I	%10 INITIATED FOR ID = %8
IST403I	%8 COMMAND FAILED - MULTIPLE OPTIONS FOR %8 NOT ALLOWED
IST407I	MODIFY ATTACH FAILED - %8 ALREADY ATTACHED
IST408I	MODIFY DETACH FAILED - %8 NOT ATTACHED
IST410I	%2 BUFFER POOL COULD NOT BE BUILT - CODE %
IST411I	%8 COMMAND REJECTED DUE TO TERMINATION IN PROGRESS
IST412I	VTAM COMMAND PROCESSING TERMINATED
IST413I	VTAM DUMPING FOR %26
IST414I	%10 FOR ID = %8 FAILED - PROCESS UNAVAILABLE
IST416I	SDUMP ISSUED DUE TO ADDRESS SPACE TERMINATION
IST422I	I/O ERROR ON DS %8 RTN CD = %2, %2
IST423I	UNABLE TO GET STORAGE FOR DS %8
IST424I	CLOSE FAILED ON DS %8 RTN CD = %2, %2
IST425I	OPEN FAILED ON DS %8 RTN CD = %2, %2
IST430I	%10 FOR ID = %8 DISCARDED
IST432I	TUNING STATISTICS NOT ACTIVE, SMF NOT IN SYSTEM
IST433I	COMMAND REJECTED - TUNING STATISTICS TASK NOT ATTACHED
IST435I	UNABLE TO RECORD ON TUNSTATS FILE, CODE = %10
IST436I	STORAGE NOT AVAILABLE FOR TUNING STATISTICS DATA
IST440I	TIME = %8 DATE = %5 ID = %8
IST441I	DLRMAX = %10 CHWR = %10 CHRD = %10
IST442I	ATTN = %10 RDATN = %10 IPIU = %10
IST443I	OPIU = %10 RDBUF = %10 SLODN = %10
IST447I	BUFFER SIZE WAS IGNORED FOR ONE OR MORE POOLS
IST448I	%8 OPTION IGNORED - %29
IST449I	%11 = %8, CURRENT = %8, MAXIMUM = %8
IST450I	INVALID %8 COMMAND SYNTAX
IST451I	%8 COMMAND UNRECOGNIZED, PARAMETER=%8
IST452I	%8 PARAMETER EXTRANEOUS
IST453I	%8 PARAMETER VALUE %17 NOT VALID

Message Text for IST VTAM Operator Messages

Message number	Text
IST454I	%8 COMMAND FAILED, INSUFFICIENT STORAGE
IST455I	%43 SESSIONS ENDED
IST456I	%8 REQUIRED PARAMETER OMITTED
IST457I	POSITIVE %8 COMMAND RESPONSE
IST458I	USS MESSAGE %3 NOT DEFINED
IST459I	%10 FAILED - ID = %8 - ADJ NODE %55
IST460I	%10 FOR U/RNAME ENTRY ID = %8 FAILED: %40
IST461I	%10 FOR U/RNAME ENTRY ID = %8 STARTED
IST462I	ACTIVATION OF LINK STATION %8 IS DEFERRED PENDING HIGHER LEVEL NODE ACTIVATION
IST464I	LINK STATION %8 HAS CONTACTED %8 SA %10
IST465I	%10 FOR ID = %8 FAILED - NO %4 STATION AVAILABLE
IST466I	%10 FOR ID = %8 CONTINUES - UNABLE TO DO %40
IST467I	CONTACTED ERROR TYPE %3 FOR ID = %8
IST468I	XID1=%56
IST469I	%63
IST470I	XID2=%56
IST471I	%63
IST473I	CONNECTIVITY TEST TO %8 TERMINATED AFTER %3 ECHOES DUE TO I/O ERROR, SENSE = %8
IST475I	%8 FAILED FOR %8 REQUEST %10 SENSE %8
IST476I	CDRM TYPE = %8 %20
IST477I	CDRMS:
IST478I	CDRSCS:
IST479I	CDRM NAME = %8, VERIFY OWNER = %3
IST482I	%8 %5, SA %10, EL %5, NETID = %8
IST483I	%8 %10, CDRM = %8, NETID = %8
IST484I	SUBAREA = %10 %26
IST486I	CURRENT STATE = %10, DESIRED STATE = %5
IST487I	%10 FOR ID = %8 SCHEDULED BY %10
IST488I	%10 FOR ID = %8 FAILED - DUPLICATE NODE: %8
IST489I	%10 FOR ID = %8 CONTINUES - CANNOT DEFINE NODE: %8
IST490I	%10 FOR ID = %8 FAILED - %10 IN PROGRESS
IST493I	%10 FOR ID = %8 OVERRIDDEN BY %10
IST494I	%10 FOR ID = %8 FAILED - ALREADY IN DESIRED STATE
IST495I	%11 HAS BEEN SET TO %8
IST496E	%22 FUNCTION INOPERATIVE DUE TO ABEND
IST499I	DISK FUNCTIONS FOR %8 NOT PERFORMED
IST507I	%8 NOT ACTIVE, TSO TRACE REQUEST IGNORED
IST510I	ROUTE TEST %3 FAILED - %35
IST511I	TRACE REQUEST FAILED - %8 INVALID
IST512I	TRACE TERMINATED FOR NODE = %8 %18
IST513I	TRACE INITIATED FOR NODE %8 %18
IST516I	DESTSUB ADJSUB TGN ER ER STATUS VR(S)
IST517I	%7 %7 %3 %2 %6 %24
IST520I	UNABLE TO PROCESS %44
IST521I	GBIND %6 FOR COS %8 %25
IST522I	%2 %2 %5 %8 SA %10 TO SA %10 %7
IST523I	REASON = %53
IST524I	REVERSE ER MASK = %4
IST525I	REJECTING SA %10 USING TG %3 ADJACENT SA %10
IST526I	ROUTE FAILED FROM %10 TO %10 - DSA %10 - NETID %8
IST528I	VIRTUAL ROUTE NUMBER %32
IST529I	VR SELECTION EXIT %24 %19
IST530I	%10 PENDING %38

Message number	Text
IST531I	%62
IST533I	ER %2 %9 IN ROUTE TEST %3
IST534I	%10 %3 %10 %10 %3
IST535I	ROUTE DISPLAY %3 FROM SA %10 TO SA %10
IST536I	VR TP STATUS ER ADJSUB TGN STATUS CUR MIN MAX
IST537I	%2 %2 %6 %2 %10 %3 %6 %3 %3 %3
IST538I	ROUTE TEST %3 IN PROGRESS
IST539I	DISPLAY ROUTE COMMAND FAILED, COS CANNOT BE RESOLVED
IST540I	DISPLAY ROUTE COMMAND FAILED, SENSE = %8
IST541I	FOLLOWING PATH DEFINITION IS IGNORED
IST542I	INVALID DESTSA %10 FOR PATH DEFINITION - IGNORED
IST543I	PATH %36 IS REDEFINED AS FOLLOWS
IST544I	PATH %36
IST546I	UNABLE TO PROCESS %41
IST547I	EXPLICIT ROUTE MASK %4
IST548I	%10 FAILED %48
IST549I	LL2 TEST FOR ID = %8 ENDED %24
IST561I	STORAGE UNAVAILABLE: %2 BUFFER POOL
IST562I	STORAGE UNAVAILABLE: %11 REACHED
IST563I	STORAGE UNAVAILABLE: MAXPVT REACHED FOR %8 %8
IST564I	STORAGE UNAVAILABLE: COMMON AREA SUBPOOL %3
IST565I	STORAGE UNAVAILABLE: VTAM PRIVATE AREA SUBPOOL %3
IST566I	STORAGE UNAVAILABLE: %8 %8 SUBPOOL %3
IST567I	%10 OF %8 FOR %8 %13
IST571I	LOAD FAILED FOR ID = %8 REQ: %10, SENSE: %8
IST572I	REJECTING TG ADJACENT ER MASK
IST574E	START I/O TIMEOUT OCCURRED FOR %8
IST576I	TSO TRACE = %3
IST577I	TIME = %8 DATE = %5 ID = %8
IST578I	CHNRM = %10 CHMAX = %10 RDBUF = %10
IST579I	ATTN = %10 TIMERS = %10 QDPTH = %10
IST580I	BUFCAP = %10 PRI = %10 SLODN = %10
IST581I	IPIU = %10 OPIU = %10 DLRMAX = %10
IST582I	'EVERY' INVALID FOR TRACE OF ID = %8 - OPERAND IGNORED
IST583I	CONFIG %8 NOT PROCESSED - SYSDEF TASK NOT ATTACHED
IST585E	VTAM UNABLE TO CLOSE %8 - RESOURCES MAY BE LOST TO VTAM
IST587I	IRN STORAGE %8 CAUSED BY SLOWDOWN OF NODE %8
IST588I	SIT TRACE STATUS = %5
IST589I	ERROR FOR ID = %8, CODE = %, NET = %8
IST590I	CONNECT%3 %11 FOR PU %8 ON LINE %8
IST591E	VTAM COMMAND CANCELED DUE TO VTAM TASK ABEND - %3 - RETRY COMMAND
IST592I	VTAM MAIN TASK ABEND - CODE %3 - VTAM IS BEING TERMINATED
IST593I	ISTPDCLU %17 SESSION ENDED
IST594I	ISTPDCLU %9 FAILED %3 %3
IST595I	IRNLIMIT = %8, CURRENT = %8, MAXIMUM = %8
IST596I	IRN TRACE = %3
IST597I	CAPABILITY-PLU %9,SLU %9,SESSION LIMIT %8
IST599I	REAL NAME = %17
IST602I	%8 FAILED ID = %8 - HIGHER NODE HAS BECOME INACTIVE
IST605I	ERROR FOR ID = %8 - %8 : %10, DATA INVALID FOR THIS NODE
IST607I	%10 FOR %17 FAILED - INVALID NODE TYPE OR STATE
IST608I	%10 FOR ID = %8 FAILED - HIGHER NODE: %8 NOT ACTIVE
IST610I	LINE %8 - STATUS %10

Message Text for IST VTAM Operator Messages

Message number	Text
IST611I	ADJACENT SSCP TABLE FOR %8 %11
IST617I	DEACTIVATION IN PROGRESS FOR %8
IST619I	ID = %8 FAILED - RECOVERY IN PROGRESS
IST621I	%22 FOR NETWORK NODE %8
IST623I	%7 ADJACENT SSCP TABLE %12
IST624I	%8 %8 %5 %7
IST627I	%8 - INSUFFICIENT STORAGE
IST632I	BUFF BUFF CURR CURR MAX MAX TIMES EXP/CONT EXP
IST633I	ID SIZE TOTAL AVAIL TOTAL USED EXP THRESHOLD INCR
IST634I	NAME STATUS SID SEND RECV VR TP NETID
IST635I	%8 %10 %16 %8 %2 %2 %7%
IST636I	CDRSCS OWNED BY %8 -
IST637I	SUBAREA=%10 ELEMENT=%5
IST638I	ADJNETSA = %10, ADJNETEL = %5
IST639I	GWN = %8, ADJNET = %8
IST640I	%8 ADDR IN ADJNET - SA = %10, EL = %5
IST641I	GATEWAY PATH SELECTION LIST - %15
IST642I	ADJNET GWN SUBAREA ELEM ADJNETSA ADJNETEL
IST643I	%8 %8 %10 %5 %10 %5
IST644I	%8 TG %8 %8
IST645I	%8 DEFINITION FAILED - NO VALID %8 MACRO
IST650I	POLL = %3, NEGPOLL = %3, SESSION(S) = %3
IST652I	%8 IS A DUPLICATE KEYWORD IN THE TRACE/NOTRACE OPTION
IST654I	I/O TRACE = %3, BUFFER TRACE = %3 %18
IST655I	%8 TRACE STATUS = %5
IST656I	ACTIVATE REJECTED FROM UNDEFINED CDRM, SA %10 EL %5
IST658I	%8 COMMAND FAILED - %8 NOT FOUND
IST660I	%10 FOR ID = %8 FAILED - PARM: %15 NOT VALID
IST663I	%10 REQUEST %22, SENSE=%8
IST664I	%5 %3=%17 %5 %3=%17
IST670I	VARY %4 PROCESSING FOR ID = %8 COMPLETE
IST674I	%10 FOR ID = %8 CONTINUES - PARM: %15 IGNORED
IST675I	VR = %2, TP = %2
IST678I	INSUFFICIENT STORAGE TO SCHEDULE TPEND EXIT FOR %8
IST679A	PLEASE DIAL LINE = %8, NUMBER = %32
IST680I	CONNECTION REQUEST DENIED - ID = %8 %20
IST683I	CONNECTION REQUEST DENIED, ID = %8
IST684I	I/O ERR, CSW = %16, SENSE = %4
IST688I	VARY FAILED FOR ID = %8 - INSUFFICIENT STORAGE
IST690I	CONNECTION REQUEST DENIED - INVALID STATION ID = %12
IST693I	UNABLE TO DISCONNECT ID = %8
IST700I	INVALID %5 - SKIPPING TO NEXT NETWORK STMT OR EOF
IST701I	CONFIG %8 LABEL = %8 STMT TYPE = %8
IST702I	CONFIG %8 - UNEXPECTED %22
IST703I	CONFIG %8 ADJSSCP DEFINITIONS IGNORED - NO ADJCDRM STMT
IST706I	ADJSSCP TABLE FOR %8 IGNORED - INSUFFICIENT STORAGE
IST707I	ADJSSCP TABLE BEING MODIFIED BY ACTIVATION OF %8
IST708I	%16 %18 %15
IST709I	CONFIG %8 FAILED-%38
IST710I	CONFIG = %8 NETWORK = %8 %22
IST712I	CONFIG %8 GWPATH %8 IGNORED - MISSING OPERANDS
IST713I	CONFIG %8 GWPATH %8 - %8 OPERAND IGNORED
IST714I	CONFIG %8 GWPATH %8 IGNORED - INVALID STMT

Message number	Text
IST715I	CONFIG %8 CDRM %8 IGNORED - GWPATH STMT MISSING
IST716I	%10 FOR %8 FAILED
IST717I	NETID %8 ID %8 SA %10 %27
IST718I	ADDRESS INVALID FOR NETID=%8 CDRM=%8 CODE=X'%2'
IST719I	%63
IST720I	%8 HAS CONTACTED %8 IN %8, SA %10
IST721I	SESSION SETUP FOR CDRM %8 USING GWN %8 FAILED
IST723I	SSCPID %12 ALREADY IN USE BY CDRM %8
IST725I	GWN %8, SUBAREA %10, CDRM ALIAS ELEMENT %5
IST726I	ADJNET %8, ADJNETSA %10, ADJNETEL %5
IST727I	COMMUNICATION WITH CDRM %8 LOST - REASON = X'%2'
IST728I	GWPATHS FOR GWN %8 ARE NOW %8 FOR THESE CDRMS
IST732I	%10 REJECTED DUE TO %20
IST734I	ACTIVATION OF CDRM %8 USING GWN %8 FAILED
IST735I	NO ADDRESS TRANSFORMS - REQACTCDRM SENT
IST737I	DEFAULT VR LIST USED FOR CDRM %8 USING GWN %8
IST740I	UNABLE TO FREE ALIAS ADDRESSES FOR CDRM %8 GWN %8
IST742I	ACTIVATION OF CDRM %8 %6 - GWN PATH NOT AVAILABLE
IST744I	CROSS-NETWORK SESSION SETUP FAILED, NETWORK = %8
IST745I	ACTCDRM TO CDRM = %8 FAILED, SENSE = %8
IST746I	BIND FAILED FROM %8 TO %8, SENSE = %8
IST751I	SIO = %8, ERROR CT = %8, CUA = %4
IST752I	GPT TRACE STATUS = %11 %18
IST755I	ALERT FROM PU %8 FOLLOWS
IST756E	ALERT FROM PU %8 FOLLOWS
IST757E	MOSS UNAVAILABLE - HARDWARE ERROR
IST758E	MOSS RELOADED - HARDWARE ERROR
IST759E	MOSS DISKETTE UNUSABLE
IST760E	MOSS DISKETTE HARDWARE ERROR
IST761E	MOSS CONSOLE UNAVAILABLE
IST762I	MOSS IN MAINTENANCE MODE
IST763I	PHYSICAL UNIT RELOADED - HARDWARE ERROR
IST764I	PHYSICAL UNIT RELOADED - PRIOR ABEND CODE WAS %8
IST765E	CHANNEL ADAPTER %8 UNAVAILABLE - HARDWARE ERROR
IST766I	DUMP FAILED - NO %4 DUMP ON %8 DISK(ETTE)
IST767E	SCANNER %8 (%8-%8) UNAVAILABLE - HARDWARE ERROR
IST768E	SCANNER %8 (%8-%8) UNAVAILABLE - HARDWARE ERROR
IST769E	SCANNER %8 (%8-%8) UNAVAILABLE - SOFTWARE ERROR
IST770E	SCANNER %8 (%8-%8) UNAVAILABLE - SOFTWARE ERROR
IST771E	SCANNER %8 LINE %8 UNAVAILABLE - HARDWARE ERROR
IST772I	UAC = %2 %42
IST773I	SESSION WITH %8 IN PROCESS OF BEING TERMINATED
IST778I	%8 %8 %8 %8 %8 %8
IST784I	SESSION(S) EXIST(S) WITH UNKNOWN PARTNER(S)
IST786I	%8 COMMAND REJECTED - %28
IST787I	SSCP TAKEOVER FOR NODE %8 IN PROGRESS
IST789I	%10 FAILED FOR ID = %8, CA / NCP CONFLICT
IST790I	MAXIMUM %5 USED = %7K
IST792I	NO SUCH SESSION EXISTS
IST793E	SESSION MANAGEMENT ERROR, CODE %29
IST796I	HOSTSA VALUE EXCEEDS %8
IST797I	FROM VIA ADJACENT DEST ER LENGTH
IST798I	%8

Message Text for IST VTAM Operator Messages

Message number	Text
IST799I	%15 %4 IN PROGRESS
IST803I	VTAM TERMINATION TASK TERMINATED-OPEN FAILED
IST804I	CLOSE IN PROGRESS FOR %8 OPENED BY %8 %8
IST805I	VTAM CLOSE COMPLETE FOR %8
IST807I	%10 FOR ID = %8 FAILED - NODE IS IN TEST MODE
IST808I	ORIGIN PU = %8 DEST PU = %8 %16
IST809I	XRF SESSIONS - PRIMARY = %5 BACKUP = %5
IST812I	%8 COMMAND NOT ACCEPTED
IST813I	USERVAR %8 CHANGED FROM %8 TO %8
IST814I	USERVAR %8 DELETED
IST815I	AUTOMATIC RECOVERY IS SUPPORTED
IST816I	%10 %3 %10 %4
IST819I	CDRM %8 COMMUNICATION LOST - RECOVERY IN PROGRESS
IST820I	%5 RSP DATA DISCARDED FOR ID = %8 - INSUFF STORAGE
IST821I	SUBTASK %8 TERMINATED, COMPLETION CODE %6
IST822I	CDRM %8 RECOVERY FAILED - INSUFFICIENT STORAGE
IST825I	USERVAR DEFINED - NAME = %8, VALUE = %8
IST826I	VTAM START REJECTED--START COMMAND NOT USED FOR VTAM INITIALIZATION
IST830I	ORIGINATING SSCP NAME = %8, NETID = %8
IST831I	DUPLICATE ADJCDRM NAME %8 IN %8
IST832I	UNLABELED %8 STMT IN %8
IST833I	SKIPPING TO NEXT %37
IST834I	%4 BACKUP SESSION(S) EXIST(S) WITH UNKNOWN PARTNERS
IST838I	TRACE STATUS DISPLAY FOR ID = %8
IST839I	PU NAME LINE NAME
IST840I	%8 %8
IST841I	NO RESOURCES ARE BEING TRACED FOR %8
IST842I	UNABLE TO FIND BUFFERS IN %2 POOL - DUMP IN PROGRESS
IST844I	VTAM START REJECTED - %8 IS DUPLICATE NAME
IST846I	REAL I/O NOT SUPPORTED BECAUSE %32
IST849I	%8 INCONSISTENT WITH USE OF %8 IN %8
IST860I	DEACTIVATION OF %8 INCOMPLETE - INSUFFICIENT STORAGE
IST861I	MODETAB=%8 USSTAB=%8 LOGTAB=%8
IST862I	NETID = %8 COSTABLE = %19
IST863I	MODIFY TABLE COMMAND FAILED-%33
IST864I	NEWTAB=%8, OLDTAB=%8, OPT=%9, TYPE=%7
IST865I	%12 COMMAND COMPLETE-%29
IST866I	%10 HAD NO EFFECT - %40
IST867I	SIT TRACE FOR %8 FAILED TO ACTIVATE
IST869I	USERID = %8
IST870I	NETWORK ADDRESS RECEIVED FOR %8 IN USE BY %8
IST871I	RESOURCE %8 %11
IST872I	DR MOVE MISMATCH DETECTED FOR %8
IST873I	PLU SLU SID STATUS
IST874I	%17 %17 %16 %8
IST875I	%7 TOWARDS %3 = %8 %28
IST876I	SIGNALS NEEDED TO COMPLETE SESSION %8
IST877I	%14 %14 %14 %14
IST878I	NUMBER OF %7 SESSIONS = %10
IST879I	%7 REAL = %17 ALIAS = %17
IST880I	SETUP STATUS = %8 %26
IST881I	%17 LINK STATION %8
IST882I	WAITING FOR DEVICE END FROM DEVICE

Message number	Text
IST883I	%9 OF SAW BUFFERS USED %27
IST886I	%11 %8 %8 %8 %11 %13 FAILED
IST887I	NO COS TABLE FOR %8 - %17 MAY BE USED
IST888I	ADDR + LENGTH VALUES EXCEED STORAGE - LENGTH SET TO %3
IST889I	SID = %16
IST890I	AUTOLOGON SESSION SETUP FAILED
IST891I	%26 GENERATED FAILURE NOTIFICATION
IST892I	%17 ORIGINATED FAILURE NOTIFICATION
IST893I	ORIGINAL FAILING REQUEST IS %10
IST894I	ADJSSCPS TRIED FAILURE SENSE ADJSSCPS TRIED FAILURE SENSE
IST895I	%8 %8 %8 %8
IST896I	AUTOLOGON WILL BE RETRIED WHEN CONTROLLING PLU IS AVAILABLE
IST897I	LOAD OF %8 STARTED
IST898I	GWSELECT = %3
IST899I	RETRY OF AUTOLOGON(S) TO %17 %14
IST919I	NODE %8 NO LONGER HAS CONTROLLING LU %8
IST920I	%4 % % BUFF SIZE %5 EXP INCREMENT %5
IST921I	TIMES EXP %10 EXP/CONT THRESH %5 / %5
IST922I	CURR TOTAL %11 CURR AVAILABLE %11
IST923I	MAX TOTAL %11 MAX USED %11
IST924I	----------
IST925I	DYNAMIC PATH DEFINITION %8 STATUS = %5
IST926I	PATH FOR %8 IGNORED - NODE %8 NOT FOUND/INVALID
IST927I	ERROR FOR %17 DSA %10 %15 CODE %2
IST928I	DELETER KEYWORD FOR %8 IGNORED
IST929I	LOAD OF DYNAMIC PATH DEFINITION %17 COMPLETE
IST930I	%16 - %16 SESSION USING %4 OF %2BUF
IST931I	SYMPTOM STRING = %44
IST932E	FAILURE OCCURRED DURING TAKEOVER OF %8, SENSE=%8
IST933I	LOGMODE=%8, COS=%8 %10
IST934I	DLOGMOD=%8 USS LANGTAB=%8
IST935I	ORIGIN=%8, NETID=%8, ID=%17
IST936I	ANSWER MODE = %28
IST937A	%8 CORRELATOR MISMATCH %17 %17 REPLY 'RELOAD'
IST938I	OPEN ACB REJECTED, CANNOT LOAD %8
IST939I	VARY NOLOGON COMMAND HAD NO EFFECT - %8 NOT FOUND FOR %8
IST940I	%64
IST946I	BASENO %5 GREATER OR EQUAL TO XPANLIM %10 BUFFERS
IST947I	STATIC BUFFERING ASSUMED FOR %2BUF
IST948I	XPANLIM TOO SMALL FOR %2BUF - CHANGED TO %10 BUFFERS
IST949I	ISTMGC10 IN VTAMLIB %10 - VTAM PROCESSING CONTINUES
IST950I	VCNS = %10
IST951I	DISPLAY DISK INFORMATION FOR %8
IST952I	DUMP NAME DATE TIME
IST953I	%8 %8 %8
IST954I	LOAD MODULE DATE TIME STORE STATUS [ACTIVE]
IST955I	%8 %8 %8 %9 %3
IST956I	%4 SAP=%3 MAC=%12 %13 %12
IST957I	NO NCP LOAD MODULE OR DUMP ON DISK
IST958I	INBND=%5 OUTBND=%5 PENDING=%3 ATTN=%5 CUA=%4
IST959I	INVALID PIU RECEIVED FROM %8 - VARY INACT SCHEDULED
IST960I	DISPLAY TABLE FAILED - %8 NOT FOUND
IST961I	LOAD OF %8 %12 FAILED

Message Text for IST VTAM Operator Messages

Message number	Text
IST962I	INOP X'%2' RECEIVED FOR PU UNDER SWITCHED LINE %8
IST963I	LOAD MODULE = %7
IST965I	AUTO DUMP/LOAD: %3
IST966I	USER=VCNS
IST967I	%20 FAILED FOR %8; RC %2 RS%8
IST968I	INTERFACE INITIALIZATION FAILED - REASON %2
IST970I	LU-LU VERIFICATION ERROR %2 FOR %26
IST971I	ADJ LINK STATION %8 USING %8 IN %8
IST972I	SIT TRACE FOR %8 TERMINATED - %8
IST973I	USERVAR %8 %47
IST976I	ENTRY %8 DEFINED BUT NO %6 DEFINED FOR %8
IST977I	MDLTAB=%8 ASLTAB=%8
IST979I	BUILD FAILED FOR TABLE %8
IST981I	PRIVATE: CURRENT = %8, MAXIMUM USED = %8
IST982I	%10 %10 REQUEST(S) PENDING TO SUBAREA %10
IST983E	%8 MESSAGE QUEUE LIMIT EXCEEDED - FURTHER MESSAGES WILL BE DISCARDED
IST984I	USER EXIT %17 IS %8
IST985I	USER EXIT %17 %14 FAILED-CODE %2
IST986I	TABLE=%8 TYPE=%8 USE COUNT=%8
IST987I	THE RESOURCES THAT USE THE TABLE ARE:
IST988I	%8 %8 %8 %8 %8 %8
IST989I	EXP LIMIT %8 BUFFS REQUESTED %8
IST990E	CORRELATOR MISMATCH FOR %8 IGNORED - ACTIVATION CONTINUES
IST991I	CORRELATOR MISMATCH FOR %8 FOUND-RELOAD SCHEDULED
IST998E	VTAM MESSAGE %5 ISSUED BUT DOES NOT EXIST
IST999E	VTAM MESSAGE LOST - INSUFFICIENT STORAGE
IST1001I	ID= %8 %15 %16
IST1002I	RCPRI=%4 RCSEC=%4
IST1003I	%7 CNOS=%8 DEFINE=%8
IST1004I	%10 FOR %8 FAILED - %28
IST1005I	%17 %17 %17
IST1006I	%8 NAMES DEFINED %23 FOR %8
IST1007I	PARTNER = %17, LOGMODE = %8
IST1008I	CONVID = %8, STATUS = %9, ETIME = %5
IST1009I	SID = %16
IST1010I	NO CONVERSATION(S) FOUND FOR %8
IST1011I	ENTRY %8 NOT FOUND IN %6 %8 FOR %8
IST1012I	NO PARTNER LU(S) DEFINED FOR %8
IST1013I	NO LOGMODE(S) DEFINED IN LU %8 FOR %8
IST1015I	APPLICATION SUPPLIED %21=%16
IST1016I	DYNANMIC DEFINITION OF %8 FAILED
IST1017I	MODELS:
IST1018I	MODEL MAJOR NODE = %8
IST1019I	USERVAR VALUE CLASS TYPE EXIT APPC
IST1020I	INSUFFICIENT STORAGE-DATA SPACE %8 FULL
IST1021I	MEDIUM=%8,ADAPNO=%4,CUA=%4,SNASAP=%4
IST1022I	WRBUF = %10
IST1023E	START I/O TIMEOUT OCCURRED FOR CUA=%4
IST1024I	I/O ERROR ON READ FOR CUA=%4-BYTE COUNT MISMATCH
IST1028I	%59
IST1029I	%8 %17 %5 %8 %4 %4
IST1030I	USERVAR EXIT IS %8
IST1031I	MODIFY COMMAND FAILED - %8: EXIT FAILURE, CODE %4

Message number	Text
IST1032I	%2 BUFFER SIZE TOO SMALL-SIZE MUST BE AT LEAST %8
IST1033I	%8 ALREADY DEFINED FOR APPC SESSIONS OF %8
IST1034I	%8 ALREADY USING %8 FOR APPC SESSIONS
IST1035I	ERROR WHILE %8 NETWORK %8 %4 GWN %8
IST1036I	NODE ABEND-UNUSABLE RESOURCE IS %8
IST1037I	NODE ABEND-INOP REPORTED FOR %8
IST1038I	MODIFY NOTRACE REJECTED-VIT IS NOT WAITING TO TERMINATE
IST1039I	SSCP TKOVR FOR ID = %8 FAILED-INACT GVBK SCHEDULED
IST1040I	CONVERSATION(S) FOUND FOR %8
IST1041I	%17 %17
IST1042I	%8 = %5 %18 %13
IST1043I	CP NAME = %8, CP NETID = %8, DYNAMIC LU = %3
IST1044I	ALSLIST = %8 %8 %8 %8
IST1045I	NODE TYPE = %17
IST1046I	%8 %17 ALSO EXISTS
IST1048I	COMPRESSION LEVEL - INPUT = %4, OUTPUT= %4
IST1049I	PERCENT REDUCTION - INPUT = %4, OUTPUT= %4
IST1050I	MAXIMUM COMPRESSION LEVEL - INPUT = %4, OUTPUT = %4
IST1051I	EVENT CODE = %4
IST1052I	SYNTAX ERROR AFTER %8-ALL FURTHER OPTIONS IGNORED
IST1053I	VALUE FOR %8 MUST BE 'YES' OR 'NO'
IST1054I	VALUE FOR %8 MUST BE BETWEEN %8 AND %10
IST1055I	VALUE FOR %8 MUST BE %7
IST1056I	%8 PARAMETER %2 MUST BE BETWEEN %4 AND %10
IST1057I	%17 IS ALSO A REAL RESOURCE
IST1058I	MODEL LU GROUP = %8, LUSEED = %8
IST1059I	MODEL NAME = %8
IST1060I	LUGROUP MAJOR NODE = %8
IST1061I	FAILURE OCCURRED ON %8 AT %4
IST1062I	EVENT ID = %40
IST1063I	MODELS AFTER THE 255TH MODEL IN LUGROUP %8 IGNORED
IST1064I	TRACE IGNORED, %17 - STORAGE SHORTAGE
IST1065I	LOAD MODULE REQUESTED IPL ESTIMATED IPL
IST1066I	%8 %14 %14
IST1067I	LOGICAL LINES:
IST1068I	PHYSICAL RESOURCE (PHYSRSC) = %8
IST1069I	PARAMETER %2 FOR %8 MUST BE %7
IST1070I	%8 FOR %8 IS NOT VALID-START CONTINUES
IST1071I	SONLIM OPTION PARAMETER 1 MUST BE GREATER THAN PARAMETER 2
IST1072I	%8 HAS TOO MANY PARAMETERS-START OPTION IGNORED
IST1073I	%8 CAN ONLY BE SPECIFIED AFTER OPTION %8
IST1074I	PARAMETERS FOR %8 ARE NOT WITHIN THRESHOLD LIMITS
IST1075I	PARAMETER %2 FOR %8 IS NOT VALID
IST1076I	VALUE DEFINED FOR HOSTPU, %8, IS A RESERVED KEYWORD
IST1077I	OPTION %8 AFTER %8 %8 IS NOT VALID
IST1078I	LIST START OPTION CANNOT BE IN START FILE-OPTION IGNORED
IST1079I	%8 ACTIVATION CONTINUES - CANNOT ASSOCIATE %8
IST1080I	%4 STATION NAME = %8
IST1081I	ADJACENT LINK STATION = %8
IST1082I	GENERATED ADDRESS FOR %8 %11 FROM %8
IST1083I	ERROR ACTIVATING ADJCP %17 SENSE = %8
IST1084I	START LIST IGNORED - %13 WILL BE USED
IST1085I	%5 ACTIVATION ERROR %20 SENSE = %8

Message Text for IST VTAM Operator Messages

Message number	Text
IST1086I	APPN CONNECTION FOR %17 IS ACTIVE - TGN = %3
IST1088I	ADJCP %17 HAS BEEN DEACTIVATED
IST1089I	MODIFY FAILED-TGP %8 DOES NOT EXIST
IST1090I	TGP FOR %6 %22 IS SET TO %8
IST1091I	MODIFY TGP FAILED - %6 %22 IS UNKNOWN
IST1092I	MODIFY TGP FAILED, INSUFFICIENT STORAGE
IST1093I	%8 IS IGNORED-ONLY VALID WHEN %11 IS SPECIFIED
IST1094I	GWSSCP VALUE FORCED TO NO-NODETYPE IS EN
IST1095I	INITIATION FAILED FOR %17 - NO LINK TO ADJCP
IST1096I	CP-CP SESSIONS WITH %17 ACTIVATED
IST1097I	CP-CP SESSION WITH %17 TERMINATED
IST1098I	%8 DEACTIVATED, DEPLETING IO BUFFER POOL
IST1099I	SESSION TERMINATED, DEPLETING %2 BUFFER POOL
IST1100I	ADJACENT CONTROL POINTS FROM MAJOR NODE %8
IST1101I	ADJCP DISPLAY SUMMARY FOR %17
IST1102I	NODENAME NODETYPE CONNECTIONS CP CONNECTIONS NATIVE
IST1103I	%17 %4 %3 %3 %4
IST1104I	CONNECTION SUMMARY FOR %17
IST1105I	RESOURCE STATUS TGN CP-CP TG CHARACTERISTICS
IST1106I	%8 %6 %3 %5 %32
IST1107I	TGP NAME TG CHARACTERISTICS
IST1108I	%8 %32
IST1110I	ACTIVATION OF CP-CP SESSION WITH %17 FAILED
IST1111I	ADJACENT NODE DOES NOT SUPPORT UNSOLICITED BINDS
IST1112I	CP ALREADY HAS A CP-CP SESSION WITH A NETWORK NODE
IST1113I	EN-EN SESSION IS NOT VALID
IST1114I	%8 START OPTION IGNORED - NOT VALID FOR %12
IST1115I	CDRM NAME %8 IS DIFFERENT THAN SSCPNAME START OPTION
IST1116I	SSCP NAME %8 IS USED
IST1117I	PHYSICAL RESOURCE (PHYSRSC) %8 %12
IST1118I	LINK DEFINITION FAILURE, CP = %17 TGN = %3
IST1119I	FAILURE REASON IS INSUFFICIENT STORAGE
IST1120I	%8 %8 DEFINITION FAILED-INSUFFICIENT STORAGE
IST1121I	COSAPPN IN %11 %9 - PROCESSING CONTINUES
IST1122I	CHKPT TO DATASET %8 WAS NOT SUCCESSFUL, CODE= %2
IST1123I	MODIFY CHKPT TO DATASET %8 WAS SUCCESSFUL
IST1124I	UNABLE TO REGISTER RESOURCES WITH %17
IST1125I	END NODE IS NOT AUTHORIZED
IST1126I	END NODE NETID REJECTED
IST1127I	UNRECOGNIZED REGISTRATION REQUEST
IST1128I	PATH %8 IGNORED, %17 - STORAGE SHORTAGE
IST1129I	%10 FAILED, %17 - DEACTIVATE PENDING
IST1130I	%10 FOR %17 FAILED - STORAGE SHORTAGE
IST1131I	DEVICE = %12 %35
IST1132I	%17 IS ACTIVE, TYPE = %17
IST1133I	%17 IS NOW INACTIVE, TYPE = %17
IST1134I	%17 NOW HAS CONTROLLING LU %17
IST1135I	FORCED VARY INACT SCHEDULED FOR %17
IST1136I	VARY INACT %17 SCHEDULED - UNRECOVERABLE ERROR
IST1137I	%11 FAILED, %17 - %19
IST1138I	REQUIRED %13 %32
IST1139I	%10 FOR %17 FAILED - SENSE: %8
IST1140I	%10 FAILED %17 - STATE %5 NOT VALID

Message number	Text
IST1141I	%10 FOR %17 OVERRIDDEN BY %10
IST1142I	TRACE REQUEST FAILED - %17 NOT VALID
IST1143I	TRACE TERMINATED FOR %17 %18
IST1144I	TRACE INITIATED FOR %17 %18
IST1145I	TRACE REQUEST FAILED, %17 - STORAGE SHORTAGE
IST1146I	%17 %10 U = %4 FAILED
IST1147I	%17 %8 LOGON= %17 FAILED
IST1148I	%17 %8 RNAME = %8 FAILED
IST1149I	VARY %4 PROCESSING FOR NODE %17 COMPLETE
IST1150I	%8 CHANGED: %17 TO %17
IST1151I	USERVAR %8 DEFINED: VALUE = %17
IST1152I	%17 CONTROLLING LU %17 REMOVED
IST1153I	%17 %17 SESSION %2BUF USE %4
IST1154I	%17 %17 %17
IST1155I	%17 VARY NOLOGON = %17 FAILED
IST1156I	USERVAR %8 IN %8 HAS VALUE %17
IST1157I	DUPLICATE REGISTRATION %17 %17
IST1158I	MODIFY TOPO COMMAND FAILED, ID = %17 %9
IST1159I	HOST NODE DATABASE ENTRY CANNOT BE DELETED
IST1160I	TYPE=FORCE MUST BE SPECIFIED FOR LOCAL TG OR ADJACENT NODE
IST1161I	SSCP SESSIONS
IST1162I	%15 = %10
IST1163I	RSN HPR
IST1164I	%10 %3
IST1165I	%6 %8 ADDRESS = %22
IST1166I	VIRTUAL NODE %17 CONNECTION ACTIVATION FAILED
IST1167I	VN %17 CONNECTION DEACTIVATION FAILED
IST1168I	VIRTUAL NODE %17 CONNECTION ACTIVE
IST1169E	%8 REPLY ID FOR MESSAGE %8 NOT AVAILABLE
IST1176I	BASIC FROZEN
IST1177I	% %7 %7 %7
IST1183I	%8 EXIT RETURNED A CODE OF %2 %21 %2
IST1184I	CPNAME = %17 - NETSRVR = %17
IST1185I	NAME = %17 - DIRECTORY ENTRY = %10 %2
IST1186I	DIRECTORY ENTRY = %10 %2
IST1187I	%10 NOT VALID-APPN NOT SUPPORTED BY %17
IST1188I	VTAM %6 STARTED AT %8 ON %8
IST1189I	%28 %26
IST1190I	OPEN FAILED FOR %8 ABEND = %3 RC = %2
IST1191I	I/O ERROR ON %8 %23
IST1192I	CLOSE FAILED FOR %8 ABEND = %3 RC= %2
IST1193I	%6 SESSION DEACTIVATION FAILURE FOR %17
IST1194I	DUPLICATE RESOURCE IS %17
IST1196I	APPN CONNECTION FOR %17 INACTIVE - TGN = %3
IST1197I	ADJCP MAJOR NODE = %17
IST1198I	%17 DELETED FROM DIRECTORY
IST1199I	%10 FOR %17 FAILED, UNKNOWN RESOURCE
IST1200I	%8 TSO USERID TRACE = %3
IST1201I	COMMAND REJECTED BY ISTCMMND EXIT
IST1202I	VALUE %17 FOR %8 IS NOT A VALID NAME
IST1203I	VALUE %17 FOR %8 IS UNKNOWN RESOURCE
IST1204I	VALUE %17 FOR %8 NOT VALID FOR REQUEST
IST1205I	MANAGEMENT SERVICES TRANSPORT UNAVAILABLE

Message Text for IST VTAM Operator Messages

Message number	Text
IST1206I	LOAD FAILED FOR THE PROGRAM-TO-PROGRAM INTERFACE
IST1207I	NETWORK MANAGEMENT IS INACTIVE
IST1208I	PROGRAM-TO-PROGRAM INTERFACE MODULE IS INACTIVE
IST1209I	PROGRAM-TO-PROGRAM INTERFACE MODULE STORAGE SHORTAGE
IST1211I	I/O ERROR %17 %4 %4 %4
IST1212I	%8 = %17 STATUS = %10
IST1213I	%35 LU-LU VERIFY ERROR %2
IST1214I	FFST %38
IST1215I	ERROR IN START LIST %8 - %22
IST1216A	ENTER 1 TO CONTINUE-2 TO REENTER LIST-3 TO TERMINATE VTAM
IST1217A	RESPONSE NOT VALID: REENTER 1, 2, OR 3
IST1218I	ACB ERROR FIELD = %2
IST1219I	RTNCD = %2, FDB2 = %2
IST1220I	SSCPNAME NETID CURRENT STATE ROUTING STATUS
IST1221I	%5 DEV = %4 STATUS = %10 STATE = %12
IST1222I	%5 DEVICE %4 IS INOPERATIVE, NAME IS %8
IST1223I	BN NATIVE TIME LEFT LOCATE SIZE
IST1224I	%3 %4 %2 %4
IST1225I	VIRTUAL NODE %17 CONNECTION INACTIVE
IST1226I	TOPOLOGY UPDATE FAILED, INSUFFICIENT STORAGE
IST1227I	%5 %10 = %41
IST1228I	%10 FOR %17 FAILED, CODE = %
IST1229I	%10 FAILED, %17 IS NOT A %2
IST1230I	TIME = %8 DATE = %5 ID = %8
IST1231I	IPIU = %8 OPIU = %8
IST1232I	TSWEEP = %7 QSWEEP = %8
IST1233I	DEV = %7 DIR = %8
IST1234I	BSIZE = %7 MAXBYTES = %8
IST1235I	SIO = %7 SLOWDOWN = %8
IST1236I	BYTECNTO = %10 BYTECNT = %10
IST1237I	%8 = %10 %21
IST1238I	DSPNAME CURRENT MAXIMUM QUEUED
IST1239I	%8 %7 %7 %7
IST1240I	DSPNAME CURRENT MAXIMUM JOBNAME APPL COUNT
IST1241I	%8 %7 %7 %8 %8 %10
IST1242I	POOL CURRENT MAXIMUM %4 %7 %7
IST1243I	%8 %7 %7 %8 %7 %7
IST1244I	TOTAL %8 POOL STORAGE USAGE: %7 %7
IST1245I	NO NETWORK NODE SERVER IS AVAILABLE FOR CP-CP SESSIONS
IST1246I	NO ADJACENT NETWORK NODES ALLOWED BY SERVER LIST
IST1247I	ALL ATTEMPTS TO ESTABLISH A SESSION WERE UNSUCCESSFUL
IST1248I	DEACTIVATE LOCAL LINK BEFORE DELETING
IST1249I	IST1249I SYNTAX ERROR AT RECORD %8 IN MEMBER %8
IST1250I	NAME LEVEL MODULE STATUS
IST1251I	%8 %8 %8 %24
IST1252I	DEFINED NETWORK NODE SERVER LIST, NAME = %8
IST1253I	%17 %13
IST1254I	SERVER LIST PROCESSED ORDER = %5
IST1255I	OTHER NETWORK NODES ALLOWED AS SERVERS
IST1256I	CURRENT NETWORK NODE SERVER
IST1257I	SEQUENCE NOT VALID, STATEMENT IGNORED, SKIPPING TO EOF
IST1258I	%10 IS NOT VALID FOR %2
IST1259I	VBUILD TYPE = %8 IS ONLY VALID FOR%4

Message number	Text
IST1260I	%24 TRUNCATED - INSUFFICIENT STORAGE
IST1261I	ABEND OCCURRED DURING LINK DEFINITION
IST1262I	MODULE %8 LOAD FAILED - %26
IST1263I	%10 FOR %17 FORCED COLD, %12 %2
IST1264I	%10 FOR %17 FAILED DURING DEFINITION
IST1265I	%10 FOR %17 FAILED - %15
IST1266I	%10 FOR %17 AFFECTS NEW SESSIONS ONLY
IST1267I	%10 FAILED - CANNOT DEFINE %17
IST1268I	%17 DEACTIVATION %10 FAILED: %8
IST1269I	%10 FOR %17 FAILED
IST1270I	%10 FAILED - %17 NOT ACTIVE
IST1271I	%10 FOR %17 SCHEDULED BY %10
IST1272I	%8 %8 CONTINUES - %17 UNDEFINED
IST1273I	%10 %17 FAILED: %10 PENDING
IST1274I	%10 %17 FAILED: %8 NOT ACTIVE
IST1275I	%15 IGNORED ON %10 %17
IST1276I	%17 %10 CDRM = %8
IST1277I	%11 %8 %8 %17 %11 %13 FAILED
IST1278I	%10 %47
IST1279I	%17 NOT UPDATED, %8 AND CDRSC CONFLICT
IST1280I	SESSION TYPE = %9 - SENSE = %8
IST1281I	%8 ON %8 MUST BE NETWORK QUALIFIED
IST1283I	MODIFY USERVAR COMMAND COMPLETE
IST1284I	LUALIAS %8 IS %17 FOR APPLICATIONS
IST1285I	ADDRESS FOR %17 %11 FROM %8
IST1286I	SHADOW PROCESSING FAILED, %8 - %17 RESET
IST1287I	FAILURE REASON IS LUALIAS %8 ALREADY IN USE
IST1288I	TOPOLOGY DATASET RETRIEVAL WAS NOT SUCCESSFUL, CODE = %2
IST1289I	FRSESET %8 PHYSICAL UNITS:
IST1290I	FRSESET HAS BEEN SUCCESSFULLY SENT TO NCP %8
IST1291I	FRSESET WILL BE SENT TO THE NCP DURING PU ACTIVATION
IST1292I	FRSESET WILL NOT BE SENT TO THE NCP DUE TO DEFINITION ERROR
IST1293I	CMIP SERVICES IS ACTIVE
IST1294I	FRSESET HAS BEEN SENT TO NCP %8 BUT FAILURE OCCURRED
IST1295I	CP NAME NODETYPE ROUTERES CONGESTED CP-CP WEIGHT
IST1296I	%17 %7 %4 %8 %5
IST1297I	ICN/MDH CDSERVR RSN HPR
IST1298I	%3 %3 %10 %4
IST1299I	TRANSMISSION GROUPS ORIGINATING AT CP %17
IST1300I	DESTINATION CP TGN STATUS TGTYPE VALUE WEIGHT
IST1301I	%17 %3 %5 %10 %3 %5
IST1302I	CAPACITY PDELAY COSTTIME COSTBYTE
IST1303I	%7 %8 %3 %3
IST1304I	SECURITY UPARM1 UPARM2 UPARM3
IST1305I	%8 %3 %3 %3
IST1306I	LAST CHECKPOINT ADJ NN EN SERVED EN CDSERVR ICN BN
IST1307I	%8 %8 %4 %4 %4 %4 %4 %4
IST1308I	RESOURCE WAS NOT FOUND IN THE TOPOLOGY DATABASE
IST1309I	START OPTION CURRENT VALUE ORIGINALVALUE ORIGIN
IST1310I	%8 %17 %17 %8
IST1311A	ENTER START OPTION OVERRIDES OR ENTER HALT TO EXIT VTAM
IST1312I	NO START OPTIONS HAVE BEEN MODIFIED
IST1313I	NO TRACES ACTIVE FOR %17

Message Text for IST VTAM Operator Messages

Message number	Text
IST1314I	TRLE = %8 STATUS = %10 CONTROL = %4
IST1315I	DISPLAY TRUNCATED AT %3 = %10
IST1316I	PU NAME = %8 STATUS = %10 TRLE = %8
IST1317I	DLCADDR SUBFIELDS FOR PID: %3 %5
IST1318I	%60
IST1319I	%57
IST1320I	%21 IS ONLY VALID AT %12
IST1321I	TABLE FOR %8 %13
IST1322I	NON-NATIVE NATIVE
IST1323I	%8 %8 %7
IST1324I	VNNAME = %17 VNGROUP = %8
IST1325I	%7 TABLE FOR %13 DYNAMICS = %7
IST1326I	CP NAME TYPE STATE STATUS SNVC
IST1327I	%17 %7 %10 %12 %3
IST1328I	TRLE %8 NOT FOUND IN TRL
IST1329I	%10 %8 FAILED - VIRTUAL NODE NOT DEFINED
IST1330I	%7 CANNOT BE ACTIVATED FROM %12
IST1331I	%13 IS INACTIVE
IST1332I	CMIP SERVICES LOAD FAILED FOR %8 IN %8
IST1333I	ADJLIST = %8
IST1334I	TGN NOT AVAILABLE
IST1335I	%8 HAS NO ADJCDRM STATEMENT FOR ADJLIST %8
IST1336I	%8 ACTIVATION FAILED = CONFLICTING%8 VALUES
IST1337I	%6 ON %8 IGNORED - ONLY VALID FOR BN
IST1338I	%8 VALUE ON %17 IGNORED-VALUES CONFLICT
IST1340I	TAKEOVER OF %8 FAILED - NCP IS %8
IST1341I	BEGINNING DACTLINK(GIVEBACK) FOR %8
IST1342I	DNSUFX = %50
IST1343I	%50
IST1345I	ID VALUE DESCRIPTION
IST1346I	NCP DOES NOT SUPPORT CONNECTION NETWORK FUNCTION
IST1347I	INSUFFICIENT STORAGE TO DELAY DISCONNECTOF %8
IST1348I	VTAM STARTED AS %19
IST1349I	COMPONENT ID IS %14
IST1350I	DEFINITION ERROR: %42
IST1351I	DLURNAME DIALNUMBER PID GID CNT
IST1352I	DLUR NAME DLUS CONWINNER STATE DLUS CONLOSER STATE
IST1353I	%17 %16 %16
IST1354I	DLUR NAME = %17 MAJNODE =%17
IST1355I	PHYSICAL UNITS SUPPORTED BY DLUR %17
IST1356I	NETWORK NODE DOES NOT PROVIDE REQUIRED SERVER FUNCTION
IST1357I	CPCP
IST1358I	NO QUALIFYING MATCHES %3 %17
IST1359I	MEMBER NAME OWNING CP SELECTABLE APPC
IST1360I	%17 %8 %3 %3
IST1361I	%8 FROM %16 IGNORED -NOT A VALID NAME
IST1362I	%8 FORCED TO %8 BECAUSE %16 DEFINED
IST1363I	GENERIC RESOURCE NAME %8 REPRESENTS %17
IST1364I	%8 IS A GENERIC RESOURCE NAME FOR:
IST1365I	CONNECTION ATTEMPT TO STRUCTURE %16 FAILED
IST1366I	MVS MACRO %8 FAILED - RTN CODE= %2- REASON CODE= %4
IST1367I	COUPLING FACILITY STRUCTURE %16 NOT AVAILABLE
IST1368I	CONNECTION IS PENDING

Message number	Text
IST1369I	REBUILD IS IN PROGRESS
IST1370I	%17 IS CONNECTED TO STRUCTURE %16
IST1371I	STRUCTURE TYPE = %5 - VERSION NUMBER = %16
IST1372I	STRUCTURE %16 IS BEING DUMPED
IST1373I	STORAGE ELEMENT SIZE = %10
IST1374I	CURRENT MAXIMUM PERCENT
IST1375I	STRUCTURE SIZE %10 %10 %4
IST1376I	STORAGE ELEMENTS %10 %10 %4
IST1377I	LIST ENTRIES %10 %10 %4
IST1378I	%9 FAILED FOR %8 - GENERIC RESOURCE NAME EXISTS
IST1380I	DISCONNECTING FROM STRUCTURE %16
IST1381I	REBUILD STARTED FOR STRUCTURE %16
IST1382I	REBUILD HAS BEEN STOPPED FOR STRUCTURE %16
IST1383I	REBUILD COMPLETE FOR STRUCTURE %16
IST1385I	ADJCLUST INFORMATION WAS IGNORED DUE TO INSUFFICIENT STORAGE
IST1386I	DYNAMIC ALLOCATION FAILED FOR %4 CODE= %2 REASON = %4
IST1387I	TCP PU %8 IS UNABLE TO ACCEPT CONNECTION REQUESTS
IST1388I	SOCKET %10 CALL FAILED, TCP ERRORNUMBER = %8
IST1389I	NO TCB IS AVAILABLE FOR SOCKET
IST1390I	NO SOCKET DESCRIPTOR IS AVAILABLE
IST1391I	DELAYED DISCONNECT OF %8 FAILED DUE TO ABEND
IST1392I	DISCNTIM = %5 DEFINED AT %4 FOR DISCONNECT
IST1393I	GENERIC RESOURCE NAME RESOLUTION EXIT IS%8
IST1394I	CPNAME = %17 STATION ID =%12
IST1395I	FLDTAB = %8 FILTER = %8
IST1396I	DISK I/O INITIALIZATION FAILED FOR CMIP SERVICES
IST1397I	INITIALIZATION FAILED FOR CMIP SERVICES
IST1398I	ALL ATTEMPTS TO RESTART CMIP SERVICES WERE UNSUCCESSFUL
IST1399I	ATTEMPTING TO RESTART CMIP SERVICES
IST1400I	DGTIMER = %5 EXTIMER = %5
IST1401I	RESOURCE NOT FOUND-RETRY IN %5 SEC(S)OR %5 REQUEST(S)
IST1402I	SRTIMER = %5 SRCOUNT = %5
IST1403I	MODIFY QUERY REPLY FROM %8
IST1404I	%2 %56
IST1405I	%56
IST1406I	CONTIMER = %5 IATIMER = %5
IST1407I	%8 IS A MULTIPLE INSTANCE OF EXIT %8
IST1408I	MODIFY TGP NOT APPLICABLE FOR %6 %22
IST1409I	%17 ASSOC = %17 ETYPE = %8
IST1410I	QUERY %10 %8
IST1411I	INOP GENERATED FOR %8
IST1412I	%30 %8 - RETURN CODE %4
IST1413I	%19 - REDIAL ATTEMPTED FOR %8
IST1414I	%19 - REDIAL NOT ATTEMPTED FOR %8
IST1415I	%8 CONFLICTS WITH A GENERIC RESOURCE NAME
IST1416I	ID = %17 FAILED - RECOVERYIN PROGRESS
IST1417I	NETID NAME STATUS TYPE MAJNODE
IST1418I	%8 %8 %10 %17 %8
IST1419I	DUPLICATE SESSION INFORMATION REPORTED FOR %17
IST1420I	UNABLE TO ASSOCIATE THE FOLLOWING SESSION(S) WITH %8
IST1421I	%17 %17 HAS DUPLICATE ADDRESS
IST1422I	SAVED TRACE REQUESTS FOR %17
IST1423I	%17 REJECTED BECAUSE DSPLYWLD = %8

Message Text for IST VTAM Operator Messages

Message number	Text
IST1424I	APPLICATIONS DEFINED USING THIS MODEL:
IST1425I	DEFINED USING MODEL %8
IST1426I	NO APPLICATIONS DEFINED USING THIS MODEL
IST1427I	NAME = %17 FOUND TYPE = %9
IST1430I	REASON FOR INOP IS %41
IST1432I	DYNLU AND CDRSC VALUES FOR %17 CONFLICT
IST1433I	%17 REJECTED - DSPLYWLD = NO FOR APPL %8
IST1434I	DLUR ANS SUPPORT CONFLICT FOR PU %8 - SET TO ANS=STOP
IST1435I	LEVEL INPUT OUTPUT
IST1436I	RU PENDING:
IST1438I	LOGMODE %8 UNKNOWN IN THIS DOMAIN,DEFAULT IS ISTCOSDF
IST1439I	IST1439I %3 PERCENT OF %8 USED FOR STRUCTURE %16
IST1440I	USE = %42
IST1441I	VARY ACT FOR %8 FAILED, USE=SPARE
IST1442I	MODIFY LINEDEF FAILED, %8 CANNOT BE REDEFINED
IST1443I	ACYDDF LOADED = NO ACCESS AUTHORITY CHECKING
IST1444I	%8 NOT LOADED = %35
IST1445I	RESOURCE %17 FOR USERVAR %8 NOT FOUND
IST1446I	SYMBOLIC SUBSTITUTION NOT AVAILABLE IN THIS RELEASE OF MVS
IST1447I	REGISTRATION TYPE = %7
IST1449I	DEFAULT(S) WILL BE USED IF NO OVERRIDE IS SPECIFIED
IST1450I	GLOBAL TNSTAT = %8 CNSL = %3 TIME = %4
IST1451I	TRLE = %8 TNSTAT = %8
IST1452I	%10 MISMATCH IGNORED FOR %8
IST1453I	VARY INACT FOR %17 FAILED - FRSESET PU ACTIVE
IST1454I	%10 %12 DISPLAYED [FOR ID = %24 | FOR LU = %24]
IST1455I	ERROR DETECTED BY EXIT SERVICES FOR %8 IN %8
IST1456I	FUNCTION %8 - REASON: %32
IST1457I	VTAM APING VERSION %5 (PARTNER TP VERSION %5)
IST1458I	ORIGIN ADJSUB VR TP ER REVERSE ER
IST1459I	%5 %5 %3 %3 %3 %3
IST1460I	TGN CPNAME TG TYPE HPR
IST1461I	%3 %17 %11 %4
IST1462I	ECHO IS %6
IST1463I	ALLOCATION DURATION: %8 MILLISECONDS
IST1464I	PROGRAM STARTUP AND VERSION EXCHANGE: %8 MILLISECONDS
IST1465I	DURATION DATA SENT DATA RATE DATA RATE
IST1466I	(MILLISECONDS) (BYTES) (KBYTE/SEC) (MBIT/SEC)
IST1467I	%8 %8 %8 %8
IST1468I	TOTALS: %8 %8 %8 %8
IST1469I	DURATION STATISTICS:
IST1470I	MINIMUM = %8 AVERAGE = %8 MAXIMUM = %8
IST1471I	SESSION UNAVAILABLE FOR APING
IST1472I	APING %11 ERROR
IST1473I	SENSE = %8
IST1474I	APINGD TP CONCURRENT INSTANCE LIMIT = %9
IST1475I	EXIT %17 IN USE: REENTER COMMAND TO FORCE
IST1476I	TCID X'%16' - REMOTE TCID X'%15'
IST1477I	ALLOWED DATA FLOW RATE = %6 %9
IST1478I	NUMBER OF UNACKNOWLEDGED BUFFERS = %5
IST1479I	RTP CONNECTION STATE = %15
IST1480I	RTP END TO END ROUTE
IST1481I	DESTINATION CP %17 - NCE X

Message number	Text
IST1482I	HPR = %3 - OVERRIDE = %3 - CONNECTION = %3
IST1483I	DTEAD = %15 VNREVCHG = %6
IST1484I	%17 %8
IST1485I	DLCADDR SUBFIELDS FOR %8
IST1486I	RTP NAME STATE DESTINATION CP
IST1487I	%8 %15 %17
IST1488I	%12 FOR RTP %8 AS %7PARTNER COMPLETED
IST1489I	APING SESSION INFORMATION
IST1490I	DLU=%17 SID=%16
IST1491I	DYNAMIC ALLOCATION FAILED FOR %4
IST1492I	VTAM DOES NOT SUPPORT 31-BIT UCB ADDRESS
IST1493I	RTP SUMMARY FOR %17 COUNT = %5
IST1494I	PATH SWITCH %9 FOR RTP %8
IST1495I	NO ALTERNATE ROUTE AVAILABLE
IST1496I	DISPLAY APING FAILED - PRIOR DISPLAY APING IS EXECUTING
IST1498I	LOADING NCP FROM %13
IST1499I	AHHC SUBCHANNEL %4 %15
IST1500I	STATE TRACE = %19
IST1501I	XCF TOKEN = %16
IST1502I	ADJACENT CP = %17
IST1503I	XCF TOKEN = %16 STATUS = %10
IST1504I	XCF CONNECTION WITH %17 ISINOPERATIVE
IST1505I	TYPE = %4 TOKEN = %16
IST1506I	%8 FAILED FOR %17 - MEMBER LEAVING GROUP
IST1507I	VR-BASED TG NOT SUPPORTED
IST1508I	CP-CP SESSIONS ON VR-BASED TG NOT SUPPORTED
IST1509I	%8 UNKNOWN BUT ACCEPTED -- PREVIOUS VALUE WAS %8
IST1510I	LLERP = %8 - RECEIVED = %8
IST1511I	MAXIMUM NETWORK LAYER PACKET SIZE = %6 BYTES
IST1512I	%27 FAILED - CODE X'%4' - CUA %4
IST1513I	%14 FAILED - %36
IST1514I	SUBAREA COS APPNCOS
IST1515I	%6 TRACE ACTIVE
IST1516I	INITIAL DATA FLOW RATE = %6 %9
IST1517I	LIST HEADERS = %10 - LOCK HEADERS= %10
IST1518I	BASE STRUCTURE IS %16
IST1519I	ALTERNATE STRUCTURES ARE:
IST1520I	SUBAREA SEARCH INFORMATION:
IST1521I	%8 NAME CDINIT DSRLST IOCD INTOTH TOTAL
IST1522I	%8 %5 %5 %5 %5 %6
IST1523I	OLU DLU SID RU
IST1524I	%17 %17 %16 %6
IST1525I	TOTAL NUMBER OF OUTSTANDING SEARCHES =%10
IST1526I	APPN SEARCH INFORMATION:
IST1527I	%6 NAME TYPE STATUS BROADCAST DIRECTED TOTAL
IST1528I	%17 %2 %4 %5 %5 %6
IST1529I	OLU DLU SID LOCATE
IST1530I	%17 %17 %16 %5
IST1531I	SID = %16 CP(OLU)= %17
IST1532I	OLU = %17 DLU = %17
IST1533I	SEARCH CONCENTRATED = %3 RDS = %3
IST1534I	SSCP/CP IN OLU DIRECTION = %17
IST1535I	REPLY RETURNED TO ORIGINATING CP = %3

Message Text for IST VTAM Operator Messages

Message number	Text
IST1536I	CONCENTRATED BEHIND %16 %20
IST1537I	AWAITING REPLY FROM THE FOLLOWING NODE(S):
IST1538I	%17 %34
IST1539I	PCID MODIFIER = %20
IST1540I	SEARCH STATUS = %10 SSCP(OLU) = %8
IST1541I	LOCATES PENDING = %10 CURRENTTASK = %5
IST1542I	NO ADJSSCP ROUTING INFORMATION AVAILABLE
IST1543I	REQUESTS CONCENTRATED BEHIND THIS SEARCH = %5
IST1544I	DIAL OUT PURGE IN PROGRESS - ID = %8
IST1545I	NODE ROLE VECTOR = %7
IST1546I	CDRM STATUS SUBAREA ELEMENT NETIDSSCPID
IST1547I	%8 %5 %10 %5 %8 %5
IST1548I	BROADCAST = %3 DIRECTED = %3
IST1549I	OWNER = %17 MNPS STATE = %21
IST1550I	MNPS STATE = %21
IST1551I	%51
IST1552I	MAC = %11 MACTYPE = %4
IST1553I	%47 %4
IST1554I	PVCNAME = %8
IST1555I	VPCI/VCI = %6
IST1556I	ATM %7 FAILURE: ID = %8 STATUS = %8
IST1557I	MEDIUM = %3, PORT NAME = %8
IST1558I	DIAG = %8 %8 %8 %8 %8 %8
IST1559I	ATM ADDRESS TYPE FORMAT
IST1560I	VARY ACT %8 CHANGE FAILED
IST1561I	PORTNAME ON TRLE NOT VALID
IST1562I	CAUSE = %3
IST1563I	CKEYNAME = %8 CKEY = %9
IST1564I	TSO NOT ACTIVE
IST1565I	%7 MODULES = %7K
IST1566I	MODULE %8 IS NOT LOADED INTO CSA/ECSA
IST1567I	%16 %16 %16
IST1568I	INLP = %10 ONLP = %10 BFNLP = %10
IST1569I	INLP = %8 ONLP = %8
IST1570I	NBYTECTO = %8 NBYTECT = %8
IST1571I	%8 ENTRY POINT IS %8 LEVEL IS %7
IST1572I	MODULE %8 CANNOT BE LOCATED
IST1573I	%12 STORAGE DISPLAY BEGINS AT LOCATION %8
IST1574I	%4 %8 %8 %8 %8 %17
IST1575I	DIALNO FOR PID: %3 %5
IST1576I	DYNAMIC SWITCHED MAJOR NODE %8 CREATED
IST1577I	HEADER SIZE = %5 DATA SIZE = %7 STORAGE = %9
IST1578I	%6 INOP DETECTED FOR %8 BY %8 CODE = %3
IST1579I	----------
IST1580I	XID RECEIVED BY VTAM:
IST1582I	CONTROL VECTOR X'22'' ANALYSIS:
IST1583I	BYTE OFFSET OF FIRST BYTE IN ERROR =%7
IST1584I	BIT OFFSET OF FIRST BIT IN ERROR = %5
IST1585I	SENSE CODE = %11
IST1586I	XID SENT BY VTAM:
IST1587I	ORIGIN NCE X'%16'
IST1588I	RTP END TO END ROUTE - COMPUTED SESSION PATH
IST1590I	PU NETID DIFFERENT THAN HOST AND CONTACTED REQUEST

Message number	Text
IST1591I	NCP NOT LOADED
IST1592I	NETID IN XID DID NOT MATCH NETID OF PU
IST1593I	RESOURCE TYPE NOT VALID
IST1594I	CPNAME IN CONTACTED REQUEST SAME AS SSCPNAME
IST1595I	LINK STATION NOT ASSOCIATED WITH AN NCP
IST1596I	SWITCHED LINK STATION STATE PCTD2 NOT VALID FOR LOAD
IST1597I	SWITCHED CALL=IN NCP NOT VALID
IST1598I	LEASED LINK STATION STATE PCTD2 NOT VALID FOR LOAD
IST1599I	NCP INDICATES LOAD REQUIRED BUT LOAD=NO
IST1600I	LOAD MODULE MISMATCH - LOAD=NO
IST1602I	RU ERROR: EXTRA CV X'%2'
IST1603I	RU ERROR: INVALID POSITIVE RESPONSE
IST1604I	RU ERROR: LENGTH, FORMAT, OR TYPE NOT VALID
IST1605I	RU ERROR: MISSING CV X'0B'
IST1606I	DIAL RETRY FAILED
IST1607I	RU ERROR: RESPONSE TOO LONG
IST1608I	RU ERROR: RESPONSE TOO SHORT
IST1609I	CV X'0B'' INDICATES ADJACENT LINK STATION NOT SUPPORTED
IST1610I	CORRELATOR MISMATCH - LOAD=NO
IST1611I	CORRELATOR MISMATCH - NCP ACQUIRED BEFORE ACTIVATION
IST1612I	LOAD MODULE MISMATCH - EXPECTED %8FOUND %8
IST1613I	TYPE = %4 ATTN = %8
IST1614I	RSIO = %8 INPACKET = %8 INBYTE = %8
IST1615I	ARPACKET = %8 ARBYTE = %8 MAXRCVD = %8
IST1616I	WSIO = %8 OTPACKET = %8 OUTBYTE = %8
IST1617I	AWPACKET = %8 AWBYTE = %8 MAXSENT = %8
IST1618I	READCCW = %8 PCICNT = %8
IST1619I	WRITECCW = %8 APPEND = %8
IST1621I	DUPLICATE CP NAME: %17 FORID = %8
IST1622I	DLCADDR SUBFIELD %2 NOT VALID - %28
IST1623I	DUPLICATE DLCADDR SUBFIELD %2 - %28
IST1624I	DLCADDR SUBFIELD %2 NOT SPECIFIED - %23
IST1625I	STORAGE ADDRESS %8 IS UNAVAILABLE
IST1626I	ALL DATA IN %16 FOR %17 REMOVED
IST1627I	MULTI-NODE PERSISTENT SESSION TIMER EXPIRED
IST1628I	DATA WAS IN AN UNRECOVERABLE STATE - %21
IST1646I	%8 %12 FAILED FOR SOCKET DESCRIPTOR %8
IST1647I	RETURN VALUE %2 RETURN CODE %8 REASON CODE %8
IST1648I	LOCAL LU = %16 REMOTE LU = %17
IST1649I	ORIGIN = %8 TARGET = %8 STATUS = %10
IST1650I	IDX INITIALIZATION FAILED FOR %8 DEVICE %4 CODE %2
IST1651I	IDX RECEIVED BY VTAM:
IST1652I	IDX SENT BY VTAM:
IST1653I	RWSIO = %8 CHWR = %8 CHRD = %8
IST1654I	INPACKET = %8 INBYTE = %8 MAXRCVD = %8
IST1655I	OTPACKET = %8 OTBYTE = %8 MAXSENT = %8
IST1656I	VTAMTOPO = %8, NODE REPORTED - %3
IST1657I	MAJOR NODE VTAMTOPO = %8
IST1658I	XID3 NEGOTIATION ERROR - DEVICE %8 - SENSE = %8
IST1659I	DATA SPACE %8 DSPSIZE = %2 %7
IST1660A	ENTER PASSWORD FOR %8 %8
IST1661I	%8 PARAMETER NOT VALID FROM PROGRAM OPERATOR
IST1662I	%8 PARAMETER VALUE NOT ALLOWED

Message Text for IST VTAM Operator Messages

Message number	Text
IST1663I	%8 %8 COMMAND FAILED - %20
IST1664I	PASSWORD MUST BE 1-8 CHARACTERS
IST1668I	LUNAME: IPADDR..PORT
IST1669I	IPADR..PORT %21
IST1670I	%17 %21
IST1671I	Entry Subarea Exit Subarea
IST1672I	CURRENT NETWORK NODE SERVER NOT FOUND IN ACTIVE NETSRVR LIST
IST1673I	SWITCH TO PREFERRED NETWORK NODE SERVER IS COMPLETE
IST1674I	PREFERRED NETWORK NODE SERVER = %18
IST1675I	ACTIVE NETSRVR LIST AND PREFERRED NN SERVER ARE MERGED
IST1676I	SWITCH TO PREFERRED NETWORK NODE SERVER FAILED - CODE = %2
IST1677I	PREFERRED NETWORK NODE SERVER
IST1679I	MEDIUM = %5
IST1680I	%6 IP ADDRESS %15
IST1681I	LOCAL SAP = %3 REMOTE SAP = %3
IST1682I	HPR/IP %8 FAILURE: ID = %8
IST1683I	HPR/IP %7 FAILURE: ID = %8 STATUS = %8
IST1684I	RETURN CODE = %8 REASON CODE = %8
IST1685I	TCP/IP JOB NAME = %8
IST1686I	NO USABLE TCP/IP JOB AVAILABLE FOR HPR/IP
IST1687I	HPR/IP PORT NOT AVAILABLE
IST1688I	EXCESSIVE TIME %5 DETECTED FOR STRUCTURE %16
IST1689I	%10 FAILED - NOT CONNECTED TO %16
IST1690I	VARY CFS FAILED - ALREADY CONNECTED TO %16
IST1691I	VARY CFS FAILED - %16 IS NOT AVAILABLE
IST1692I	TCB = %2 TCP PORT = %3
IST1693I	NETWORK ADDRESS RECEIVED FOR %17 IN USE
IST1694I	REASON = SEQUENCE NUMBER ERROR
IST1695I	PU NAME CP NAME COS NAME SWITCH CONGEST SESSIONS
IST1696I	%8 %17 %8 %3 %3 %10
IST1697I	RTP PACING ALGORITHM = ARB RESPONSIVE MODE
IST1698I	PROBE %8 ATTEMPTED - FFST NOT AVAILABLE
IST1700I	%9 CONFLICTS WITH %17 %17
IST1701I	CP NAME LOCATE SIZE
IST1702I	%17 %4
IST1703I	DESIRED LOCATE SIZE = %4 LAST LOCATE SIZE = %4
IST1704I	SORDER = %8 FROM ADJACENT SSCP TABLE
IST1705I	SORDER = %8 FROM START OPTION
IST1706I	PARTNER NAME GENERIC RESOURCE MEMBER ATTRIBUTES
IST1707I	%17 %17 %8 %8
IST1708I	%10 FAILED - GENERIC RESOURCES NOT AVAILABLE
IST1709I	%10 FAILED - NOT CONNECTED TO %16
IST1710I	RSCV FROM PLU SAVED AT SESSION ACTIVATION
IST1711I	RSCV TOWARDS SLU SAVED AT SESSION ACTIVATION
IST1713I	RTP RSCV IN THE DIRECTION OF THE %3
IST1714I	NO PATH INFORMATION EXISTS
IST1715I	MPCLEVEL = %6 MPCUSAGE = %9
IST1716I	PORTNAME = %8 LINKNUM = %3 OSA CODE LEVEL = 4%
IST1717I	ULPID = %8
IST1718I	DATAPATH DEVICE %4 NOT FOUND FOR TRLE %8
IST1719I	PCIREALO = %8 PCIREAL = %8
IST1720I	PCIVIRTO = %8 PCIVIRT = %8
IST1721I	SBALCNTO = %8 SBALCNT = %8

Message number	Text
IST1722I	PACKCNTO = %8 PACKCNT = %8
IST1723I	SIGACNTO = %8 SIGACNT = %8
IST1724I	I/O TRACE = %3 TRACE LENGTH = %4
IST1725E	STORAGE SHORTAGE IN %16 - UNABLE
IST1726I	ADDRESS FOR %17 DELETED FROM %8
IST1727I	DNS NAME: %50
IST1728I	%60
IST1729I	OPTION %4 MUST BE CODED WHEN SUBTRACE %4 IS SPECIFIED
IST1730I	SUBTRACE %4 ACTIVE UNDER TRACE OPTION %4
IST1731I	%8 ACTIVATION FAILED - HPR=RTP REQUIRED WITH HPR/IP
IST1732I	VTAM INITIATED SLOWDOWN TERMINATION FOR DEVICE %8
IST1733I	%8 DEVICE HAS BEEN IN SLOWDOWN MORE THAN %3 SECONDS
IST1734I	DEVICE %8 INITIATED SLOWDOWN TERMINATION
IST1736I	PU NAME
IST1737I	%8
IST1738I	ANR LABEL TP ER NUMBER
IST1739I	%16 %8 %
IST1740I	IBMTGPS IN %11 IS EMPTY - PROCESSING CONTINUES
IST1741I	DATA SPACE SDUMPX FAILED WITH RETURN CODE % REASON X'%2'
IST1743I	IBMTGPS IN %11 NOT FOUND - PROCESSING CONTINUES
IST1744I	IBMTGPS IN %11 IN ERROR - PROCESSING CONTINUES
IST1745I	%17 REJECTED BECAUSE VARYWLD = %8
IST1746I	%7 COMMAND PROCESSING COMPLETE
IST1747I	SUMMARY OF STATE INFORMATION:
IST1748I	%5 = %10 %5 = %10 %5 = %10
IST1749I	%17 REJECTED - VARYWLD = NO FOR APPL %8
IST1750I	PCITHRSO = %10 PCITHRSH = %10
IST1751I	PCIUNPRO = %10 PCIUNPRD = %10
IST1752I	RPROCDEO = %10 RPROCDEF = %10
IST1753I	RREPLDEO = %10 RREPLDEF = %10
IST1754I	NOREADSO = %10 NOREADS = %10
IST1755I	SBALMAX = %10 SBALAVG = %10
IST1756I	QDPTHMAX = %10 QDPTHAVG = %10
IST1757I	PRIORITY%: %11 PRIORITY%: %11
IST1758I	RSCV TOWARDS DLUR SAVED AT SESSION ACTIVATION
IST1759I	RTP RSCV FROM THE DIRECTION OF THE DLUR
IST1760I	%8 SUBCHANNEL %4 VARY OFFLINE NOT ALLOWED
IST1761I	%8 PARAMETER EXTRANEOUS FOR DISPLAY ID COMMAND
IST1762I	%8 ACT FAILED - TCPNAME/IPADDR START OPTION REQUIRED
IST1763I	NO ACTIVE CP-CP SESSION-CAPABLE TGS EXIST
IST1764I	NO ACTIVE CP-CP SESSION-CAPABLE TG TO %17
IST1765I	ADJACENT CP WINNER LOSER STATE NODE ANDCB
IST1766I	%17 %6 %6 %9 %2 %8
IST1767I	TRACE INITIATED FOR %8 DYNAMIC APPLICATIONS
IST1768I	TRACE TERMINATED FOR %8 DYNAMIC APPLICATIONS
IST1769I	LAST TDU RECEIVED - %8 %8 FROM %17
IST1770I	TDU COUNTS RESET - %8 %8
IST1771I	SENT - %5 RECEIVED - %5 ACCEPTED - %5
IST1772I	REJECTED - %5 IGNORED - %5
IST1773I	TNSTAT RECORDS CANNOT BE SENT TO SMF - SMF NOT IN SYSTEM
IST1774I	OPTIMAL CNN ROUTE NOT CHOSEN - ENTRY/EXIT SUBAREA MISMATCH
IST1775I	CNN ENTRY SUBAREA = %5 CNN EXIT SUBAREA = %5
IST1776I	TDUS RECEIVED MOST RECENTLY

Message Text for IST VTAM Operator Messages

Message number	Text
IST1777I	CP NAME RSN DESTINATION CP TGN ACC REJ
IST1778I	%17 %8 %17 %3 %5 %5
IST1779I	TDUS RECEIVED BETWEEN %8 %8 - %8 %8
IST1780I	TOPOLOGY RESOURCE RECORDS REFERENCED MOST FREQUENTLY
IST1781I	INITDB CHECKPOINT DATASET LAST GARBAGE COLLECTION
IST1782I	ENTRY NAME TABLE NAME ACTIVATION TIME
IST1783I	%8 %8 %8 %8
IST1784I	LAST TDU RECEIVED - NONE
IST1785I	%8 %8 %8 %8
IST1786I	HPR ROUTE TEST INITIATED FOR RTP PU
IST1787I	HPR ROUTE TEST RESULTS FOR RTP PU %8
IST1788I	NODE CP NAME TG NUMBER PARTNER CP NAME INTERNODAL TIME
IST1789I	(MILLISECONDS)
IST1790I	%17 %8 %17 %15
IST1791I	HPR ROUTE TEST PACKET NOT RETURNED BY NODE %17
IST1792I	TOTAL RTP TRAVERSAL TIME %15 MILLISECONDS
IST1793I	HPR ROUTE TEST NOT INITIATED - RTP PU NOT IN PROPER STATE
IST1794I	HPR ROUTE TEST NOT INITIATED - TEST ALREADY IN PROGRESS
IST1795I	HPR ROUTE TEST NOT INITIATED - INSUFFICIENT STORAGE
IST1796I	SYSTEM-MANAGED DUPLEXING REBUILD IS IN PROGRESS
IST1797I	STRUCTURE TYPE = %5
IST1798I	TOPOLOGY DATASET RETRIEVED WAS CREATED ON %8 %8
IST1799I	NO ROUTE AVAILABLE TO DESTINATION IP ADDRESS %15
IST1800I	TRLE = %8 ** CONGESTED **
IST1801I	UNITS OF WORK FOR NCB AT ADDRESS X''%8''
IST1802I	%2 CURRENT = %4 AVERAGE = %4 MAXIMUM = %4
IST1803I	%8 PARAMETER VALUE NOT VALID - DEFAULT %8 USED
IST1804I	%8 PARAMETER NOT VALID - IGNORED
IST1805I	ONLY LOCAL TOPOLOGY INFORMATION IS AVAILABLE
IST1806I	NO DIAL-IN LINE FOUND FOR HPR/IP SWITCHED CONNECTION
IST1807I	NO DIAL-IN LINE FOR HPR/IP VIRTUAL NODE %17
IST1809I	HPR ROUTE TEST NOT INITIATED - INSUFFICIENT PATH INFORMATION
IST1810I	PKTIQDO = %10 PKTIQD = %10
IST1811I	BYTIQDO = %10 BYTIQD = %10
IST1812I	PKTIQEO = %10 PKTIQE = %10
IST1813I	BYTIQEO = %10 BYTIQE = %10
IST1814I	IQDIO ROUTING ENABLED
IST1815I	IQDIO ROUTING DISABLED
IST1816I	PARAMETER 1 FOR DISCNTIM MUST BE NUMERIC OR IMMED
IST1817I	PATH SWITCH REASON: RTP CONNECTION UNAVAILABLE
IST1818I	PATH SWITCH REASON: SHORT REQUEST RETRY LIMIT EXHAUSTED
IST1819I	PATH SWITCH REASON: TG INOP
IST1820I	PATH SWITCH REASON: MODIFY RTP COMMAND ISSUED
IST1821I	PATH SWITCH REASON: AUTO PATH SWITCH FOR PSRETRY
IST1822I	PATH SWITCH REASON: UNKNOWN
IST1823I	LIST DVIPA SYSNAME TCPNAME # ASSIGNED PORTS
IST1824I	%4 %15 %5
IST1825I	%8 %8 %5
IST1826I	PORTS: %5 %5 %5 %5 %5 %5
IST1827I	%5 %5 %5 %5 %5 %5
IST1828I	LIST %4 IS UNCLAIMED
IST1829I	NO CLAIMED LISTS FOUND FOR THE SPECIFIED DVIPA
IST1830I	NO CLAIMED LISTS FOUND

Message number	Text
IST1831I	%3 OF SYSTEM CSA STORAGE REMAINING = %9
IST1832I	CSALIMIT VALUE %9 MIGHT BE TOO SMALL
IST1833I	CSA STORAGE ALLOCATION EXCEEDS SPECIFIED CSALIMIT VALUE
IST1834I	LIST DVIPA SYSNAME TCPNAME #ENTRIES TGCOUNT SEQNUMBER
IST1835I	%4 %15
IST1836I	%8 %8 %10 %10
IST1837I	%8 %8 %10 %10
IST1838I	LIST ENTRY KEYS:
IST1839I	%32
IST1841I	ACTUAL DATA FLOW RATE = %6 %9
IST1842I	NUMBER OF NLPS RETRANSMITTED = %10
IST1843I	NUMBER OF NLPS ON WAITING-TO-SEND QUEUE = %5
IST1844I	ARB MODE = %6
IST1845I	BOUNDARY DIVIDING REGIONS % AND % = %10 MILLISECONDS
IST1846I	%7 RECEIVER THRESHOLD = %9 MICROSECONDS
IST1847I	NUMBER OF NLPS ON WAITING-FOR-ACKNOWLEDGEMENT QUEUE = %5
IST1848I	SEND BYTE COUNT = %10 RECEIVE BYTE COUNT = %10
IST1849I	LARGEST NLP SENT = %10 BYTES
IST1850I	LARGEST NLP RECEIVED = %10 BYTES
IST1851I	SMOOTHED ROUND TRIP TIME = %10 MILLISECONDS
IST1852I	LIVENESS TIMER = %10 SECONDS
IST1853I	NUMBER OF NLPS ON OUT-OF-SEQUENCE QUEUE = %5
IST1854I	NUMBER OF NLPS ON INBOUND SEGMENTS QUEUE = %5
IST1855I	NUMBER OF SESSIONS USING RTP = %10
IST1856I	LAST PATH SWITCH OCCURRENCE WAS ON %8 AT %8
IST1857I	BACKPRESSURE REASON COUNTS:
IST1858I	PATHSWITCH SEND QUEUE MAX STORAGE FAILURE
IST1859I	%3 %3 %3
IST1860I	NUMBER OF NLPS SENT = %10 - OVERFLOW = %10
IST1861I	NUMBER OF NLPS RECEIVED = %10 - OVERFLOW = %10
IST1862I	ARB MAXIMUM SEND RATE = %6 %9
IST1863I	SUBAREA INDEX ELEMENT
IST1864I	X'%4' (%5) X'%4' (%5) X'%4' (%5)
IST1865I	GLOBAL INOPDUMP = %3
IST1866I	TRLE = %8 INOPDUMP = %3
IST1867I	INOPDUMP = %3 FOR ALL TRLE-BASED RESOURCES

Message text for ISU VTAM operator messages

The following table lists the message text for all ISU VTAM operator messages issued for MVS/ESA.

Message number	Text
ISU1500I	SOCKETS-OVER-SNA JOB: *jobname* APPLID: *applid*
ISU1501I	SOCKETS-OVER-SNA *jobname* INITIALIZATION COMPLETE
ISU1502I	ENVVAR VALUE IS NOT VALID, DEFAULT USED
ISU1508I	UNABLE TO ALLOCATE STORAGE
ISU1511I	SOCKETS-OVER-SNA *jobname* SHUTDOWN INITIATED
ISU1512I	*parameter_name* IS SET TO *value*
ISU1513I	SOCKETS-OVER-SNA *jobname* SHUTDOWN COMPLETE
ISU1516I	END OF SOCKETS-OVER-SNA MESSAGE GROUP
ISU1517I	UNABLE TO MAP IP ADDRESS *ip_address* TO LU

Message Text for ISU VTAM Operator Messages

Message number	Text
ISU1519I	ERROR CONFIGURING SNA0 INTERFACE
ISU1520I	VTAM *macroname* MACRO FAILED
ISU1521I	REGISTER *regnum* = *regval*
ISU1522I	MVS LOAD MACRO FAILED FOR MODULE *modulename*
ISU1523I	ACB ERROR FIELD = *acberflg*
ISU1524I	CONVERSATION = *conversation_id*
ISU1525I	RTNCD = *rtncd* FDB2 = *fdb2*
ISU1526I	SSENSEI = *ssensei* SSENSMI = *ssensmi*
ISU1527I	COULD NOT ALLOCATE *byte_num* BYTES OF STORAGE
ISU1528I	CONVERSATION *conversation_id* NOT USABLE FOR SEND PROCESSING
ISU1532I	APPCCMD ERROR REQUEST = *request_type* STAGE = *stage*
ISU1533I	RCPRI = *rcpri* RCSEC = *rcsec*
ISU1534I	INCONSISTENCY IN MAPPING IP ADDRESS *ip_address* TO LU
ISU1535I	SOURCE LU *source_lu* - MAPPED LU *mapped_lu*
ISU1538I	SOCKETS-OVER-SNA MESSAGE GROUP: *jobname*
ISU1554I	SESSION LIMIT OF *session_limit* EXCEEDED
ISU1557I	ERROR RC *X'value'* FROM MVS SERVICE *name*
ISU1559I	RV = *rv* RC = X'*rc*' RSN = X'*rsn*'
ISU1560I	OPENEDITION TERMINATION FAILED -- NO RECOVERY ATTEMPTED
ISU1561I	FAILURE UPDATING OPENEDITION SOCKET TABLE CMD = *cmd*
ISU1562I	OPENEDITION CALLABLE SERVICE *service* FAILED
ISU1563I	OPENEDITION SHARED DATA UPDATE FAILED
ISU1564I	OPENEDITION REQUEST FAILED
ISU1567I	FAILURE UPDATING OPENEDITION ROUTE TABLE - CMD = *cmd*
ISU1568I	ENVVAR *parameter_name* VALUE IS NOT VALID, ENVVAR IGNORED
ISU1569I	ENVVAR *parameter_name1* IGNORED
ISU1570I	ENVVAR *parameter_name2* MUST ALSO BE SPECIFIED
ISU1571I	FAILURE TO REGISTER WITH OPENEDITION - CMD = *cmd*
ISU1576I	TRACING DISABLED
ISU1577I	ERROR WRITING TO TRACE DATA SET - ERRNO *errno*
ISU1578I	ERROR OPENING TRACE DATA SET - ERRNO *errno*
ISU1579I	INITIALIZATION FAILED - UNABLE TO LOAD *module*
ISU1580I	INITIALIZATION FAILED: *reason*
ISU1581I	THREAD *thread_identifier* DETECTED A SEVERE ERROR
ISU1582I	SOCKETS-OVER-SNA TRACING TO *ddname*
ISU1583I	ERROR OPENING TRACE *ddname* - FORMAT NOT VALID

Message text for IUT VTAM operator messages

The following table lists the message text for all IUT VTAM operator messages issued for MVS/ESA.

Message number	Text
IUT5000I	`%8 STILL ACTIVE: VTAM TERMINATION WAITING FOR %8`
IUT5001I	`VTAM REGISTRATION MANAGER PROCESSING TERMINATED`

Message text for IVT VTAM operator messages

The following table lists the message text for all IVT VTAM operator messages issued for MVS/ESA.

Message number	Text
IVT5501I	CSM PARMLIB MEMBER %8 NOT FOUND - DEFAULT VALUES USED
IVT5502I	READ ERROR ON PARMLIB MEMBER %8 - DEFAULT VALUES USED
IVT5503I	CSM PARMLIB PARAMETER NOT VALID - %26
IVT5504I	ABEND %3 OCCURRED IN %8 - SDUMP HAS BEEN ISSUED
IVT5505I	CSM SDUMP FAILED WITH RETURN CODE %2 REASON X'%2'
IVT5506I	%8 STORAGE ALLOCATION FAILED IN CSM
IVT5507I	CSM PARMLIB INFORMATION FOUND IN MEMBER %8
IVT5508I	DISPLAY ACCEPTED
IVT5510I	MODIFY ACCEPTED
IVT5511I	%7 CSM COMMAND SYNTAX NOT VALID
IVT5512I	FIXED PARAMETER VALUE NOT VALID
IVT5513I	ECSA PARAMETER VALUE NOT VALID
IVT5516I	ERROR OBTAINING CSM PARMLIB INFORMATION - LIMITS UNCHANGED
IVT5517I	CSM LIMITS PRIOR TO MODIFY CSM PROCESSING:
IVT5518I	CSM LIMITS AFTER MODIFY CSM PROCESSING:
IVT5519I	ECSA MAXIMUM = %5 - FIXED MAXIMUM = %5
IVT5520I	OWNERID VALUE NOT VALID
IVT5521I	NO CSM STORAGE IS CURRENTLY ALLOCATED TO OWNERID %4
IVT5529I	PROCESSING DISPLAY CSM COMMAND - OWNERID NOT SPECIFIED
IVT5530I	BUFFER BUFFER
IVT5531I	SIZE SOURCE INUSE FREE TOTAL
IVT5532I	----------
IVT5533I	%5 %13 %9 %9 %9
IVT5534I	%5 %13 POOL DOES NOT EXIST
IVT5535I	TOTAL %13 %9 %9 %9
IVT5536I	TOTAL ALL SOURCES %9 %9 %9
IVT5538I	FIXED MAXIMUM = %9 FIXED CURRENT = %9
IVT5539I	ECSA MAXIMUM = %9 ECSA CURRENT = %9
IVT5541I	%5 MAXIMUM USED = %9
IVT5549I	PROCESSING DISPLAY CSM COMMAND - OWNERID SPECIFIED
IVT5551I	SIZE SOURCE STORAGE ALLOCATED TO OWNER
IVT5553I	%5 %13 %9
IVT5554I	TOTAL %13 %9
IVT5556I	TOTAL FOR OWNERID %9
IVT5557I	OWNERID: ASID = %4 JOBNAME = %8
IVT5558I	%5 %13 UNABLE TO DETERMINE BUFFER VALUES
IVT5559I	CSM DATA SPACE % NAME: %8
IVT5560I	CSM ECSA STORAGE LIMIT EXCEEDED
IVT5561I	CSM FIXED STORAGE LIMIT EXCEEDED
IVT5562I	CSM ECSA STORAGE AT CRITICAL LEVEL
IVT5563I	CSM FIXED STORAGE AT CRITICAL LEVEL
IVT5564I	CSM ECSA STORAGE SHORTAGE RELIEVED
IVT5565I	CSM FIXED STORAGE SHORTAGE RELIEVED
IVT5599I	END
IVT5600I	PROBE %8 ATTEMPTED - FFST NOT AVAILABLE
IVT5602I	DATA SPACE SDUMPX FAILED WITH RETURN CODE % REASON X'%2'

Appendix F. Architectural specifications

This appendix lists documents that provide architectural specifications for the SNA Protocol.

The APPN Implementers' Workshop (AIW) architecture documentation includes the following architectural specifications for SNA APPN and HPR:

- APPN Architecture Reference (SG30-3422-04)
- APPN Branch Extender Architecture Reference Version 1.1
- APPN Dependent LU Requester Architecture Reference Version 1.5
- APPN Extended Border Node Architecture Reference Version 1.0
- APPN High Performance Routing Architecture Reference Version 4.0
- SNA Formats (GA27-3136-19)
- SNA Technical Overview (GC30-3073-04)

For more information, refer to the AIW documentation page at http://nhdidd.raleigh.ibm.com/app/aiwdoc.htm.

The following RFC also contains SNA architectural specifications:

- RFC 2353 *APPN/HPR in IP Networks APPN Implementers' Workshop Closed Pages Document*

RFCs can be obtained from:

Government Systems, Inc.
Attn: Network Information Center
14200 Park Meadow Drive
Suite 200
Chantilly, VA 22021

Many RFCs are available online. Hardcopies of all RFCs are available from the NIC, either individually or by subscription. Online copies are available using FTP from the NIC at http://www.rfc-editor.org/rfc.html.

Use FTP to download the files, using the following format:

```
RFC:RFC-INDEX.TXT
RFC:RFCnnnn.TXT
RFC:RFCnnnn.PS
```

where:

- *nnnn* is the RFC number.
- TXT is the text format.
- PS is the postscript format.

You can also request RFCs through electronic mail, from the automated NIC mail server, by sending a message to `service@nic.ddn.mil` with a subject line of `RFC` *`nnnn`* for text versions or a subject line of `RFC` *`nnnn`*`.PS` for PostScript versions. To request a copy of the RFC index, send a message with a subject line of `RFC INDEX`.

For more information, contact `nic@nic.ddn.mil`.

© Copyright IBM Corp. 1984, 2002

Appendix G. Information APARs

This appendix lists information APARs for IP and SNA documents.

Notes:

1. Information APARs contain updates to previous editions of the manuals listed below. Documents updated for V1R4 are complete except for the updates contained in the information APARs that may be issued after V1R4 documents went to press.
2. Information APARs are predefined for z/OS V1R4 Communications Server and may not contain updates.
3. Information APARs for OS/390 documents are in the document called *OS/390 DOC APAR and PTF ++HOLD Documentation*, which can be found at http://publibz.boulder.ibm.com/cgi-bin/bookmgr_OS390/BOOKS/IDDOCMST/CCONTENTS.
4. Information APARs for z/OS documents are in the document called *z/OS and z/OS.e DOC APAR and PTF ++HOLD Documentation*, which can be found at http://publibz.boulder.ibm.com:80/cgi-bin/bookmgr_OS390/BOOKS/ZIDOCMST/CCONTENTS.

Information APARs for IP documents

Table 4 lists information APARs for IP documents.

Table 4. IP information APARs

Title	z/OS CS V1R4	z/OS CS V1R2	CS for OS/390 2.10 and z/OS CS V1R1	CS for OS/390 2.8
IP API Guide	ii13255	ii12861	ii12371	ii11635
IP CICS Sockets Guide	ii13257	ii12862		ii11626
IP Configuration				ii11620 ii12068 ii12353 ii12649 ii13018
IP Configuration Guide	ii13244	ii12498 ii13087	ii12362 ii12493 ii13006	
IP Configuration Reference	ii13245	ii12499	ii12363 ii12494 ii12712	
IP Diagnosis	ii13249	ii12503	ii12366 ii12495	ii11628
IP Messages Volume 1	ii13250	ii12857 ii13229	ii12367	ii11630 13230
IP Messages Volume 2	ii13251	ii12858	ii12368	ii11631
IP Messages Volume 3	ii13252	ii12859	ii12369 12990	ii11632 ii12883
IP Messages Volume 4	ii13253	ii12860		
IP Migration	ii13242	ii12497	ii12361	ii11618

© Copyright IBM Corp. 1984, 2002

Table 4. IP information APARs (continued)

Title	z/OS CS V1R4	z/OS CS V1R2	CS for OS/390 2.10 and z/OS CS V1R1	CS for OS/390 2.8
IP Network and Application Design Guide	ii13243			
IP Network Print Facility		ii12864		ii11627
IP Programmer's Reference	ii13256	ii12505		ii11634
IP and SNA Codes	ii13254	ii12504	ii12370	ii11917
IP User's Guide			ii12365 ii13060	ii11625
IP User's Guide and Commands	ii13247	ii12501	ii12365 ii13060	ii11625
IP System Admin Guide	ii13248	ii12502		
Quick Reference	ii13246	ii12500	ii12364	

Information APARs for SNA documents

Table 5 lists information APARs for SNA documents.

Table 5. SNA information APARs

Title	z/OS CS V1R4	z/OS CS V1R2	CS for OS/390 2.10 and z/OS CS V1R1	CS for OS/390 2.8
Anynet SNA over TCP/IP				ii11922
Anynet Sockets over SNA				ii11921
CSM Guide				
IP and SNA Codes	ii13254	ii12504	ii12370	ii11917
SNA Customization	ii13240	ii12872	ii12388	ii11923
SNA Diagnosis	ii13236	ii12490 ii13034`	ii12389	ii11915
SNA Messages	ii13238	ii12491	ii12382 ii12383	ii11916
SNA Network Implementation Guide	ii13234	ii12487	ii12381	ii11911
SNA Operation	ii13237	ii12489	ii12384	ii11914
SNA Migration	ii13233	ii12486	ii12386	ii11910
SNA Programming	ii13241	ii13033	ii12385	ii11920
Quick Reference	ii13246	ii12500	ii12364	ii11913
SNA Resource Definition Reference	ii13235	ii12488	ii12380 ii12567	ii11912 ii12568
SNA Resource Definition Samples				
SNA Data Areas	ii13239	ii12492	ii12387	ii11617

Other information APARs

Table 6 on page 805 lists information APARs not related to documents.

Table 6. Non-document information APARs

Content	Number
OMPROUTE	ii12026
iQDIO	ii11220
index of recomended maintenace for VTAM	ii11220
CSM for VTAM	ii12657
CSM for TCP/IP	ii12658
AHHC, MPC, and CTC	ii01501
DLUR/DLUS for z/OS V1R2	ii12986
Enterprise Extender	ii12223
Generic resources	ii10986
HPR	ii10953
MNPS	ii10370
Performance	ii11710 ii11711 ii11712

Appendix H. Accessibility

Accessibility features help a user who has a physical disability, such as restricted mobility or limited vision, to use software products successfully. The major accessibility features in z/OS enable users to:

- Use assistive technologies such as screen-readers and screen magnifier software
- Operate specific or equivalent features using only the keyboard
- Customize display attributes such as color, contrast, and font size

Using assistive technologies

Assistive technology products, such as screen-readers, function with the user interfaces found in z/OS. Consult the assistive technology documentation for specific information when using it to access z/OS interfaces.

Keyboard navigation of the user interface

Users can access z/OS user interfaces using TSO/E or ISPF. Refer to *z/OS TSO/E Primer*, *z/OS TSO/E User's Guide*, and *z/OS ISPF User's Guide Volume I* for information about accessing TSO/E and ISPF interfaces. These guides describe how to use TSO/E and ISPF, including the use of keyboard shortcuts or function keys (PF keys). Each guide includes the default settings for the PF keys and explains how to modify their functions.

© Copyright IBM Corp. 1984, 2002

Notices

IBM may not offer all of the products, services, or features discussed in this document. Consult your local IBM representative for information on the products and services currently available in your area. Any reference to an IBM product, program, or service is not intended to state or imply that only that IBM product, program, or service may be used. Any functionally equivalent product, program, or service that does not infringe any IBM intellectual property right may be used instead. However, it is the user's responsibility to evaluate and verify the operation of any non-IBM product, program, or service.

IBM may have patents or pending patent applications covering subject matter described in this document. The furnishing of this document does not give you any license to these patents. You can send license inquiries, in writing, to:

IBM Director of Licensing
IBM Corporation
North Castle Drive
Armonk, NY 10504-1785
U.S.A.

For license inquiries regarding double-byte (DBCS) information, contact the IBM Intellectual Property Department in your country or send inquiries, in writing, to:

IBM World Trade Asia Corporation
Licensing
2-31 Roppongi 3-chome, Minato-ku
Tokyo 106, Japan

The following paragraph does not apply to the United Kingdom or any other country where such provisions are inconsistent with local law:
INTERNATIONAL BUSINESS MACHINES CORPORATION PROVIDES THIS PUBLICATION "AS IS" WITHOUT WARRANTY OF ANY KIND, EITHER EXPRESS OR IMPLIED, INCLUDING, BUT NOT LIMITED TO, THE IMPLIED WARRANTIES OF NON-INFRINGEMENT, MERCHANTABILITY OR FITNESS FOR A PARTICULAR PURPOSE. Some states do not allow disclaimer of express or implied warranties in certain transactions, therefore, this statement may not apply to you.

This information could include technical inaccuracies or typographical errors. Changes are periodically made to the information herein; these changes will be incorporated in new editions of the publication. IBM may make improvements and/or changes in the product(s) and/or the program(s) described in this publication at any time without notice.

Any references in this information to non-IBM Web sites are provided for convenience only and do not in any manner serve as an endorsement of those Web sites. The materials at those Web sites are not part of the materials for this IBM product and use of those Web sites is at your own risk.

IBM may use or distribute any of the information you supply in any way it believes appropriate without incurring any obligation to you.

Licensees of this program who wish to have information about it for the purpose of enabling: (i) the exchange of information between independently created programs

© Copyright IBM Corp. 1984, 2002

and other programs (including this one) and (ii) the mutual use of the information which has been exchanged, should contact:

Site Counsel
IBM Corporation
P.O.Box 12195
3039 Cornwallis Road
Research Triangle Park, North Carolina 27709-2195
U.S.A

Such information may be available, subject to appropriate terms and conditions, including in some cases, payment of a fee.

The licensed program described in this information and all licensed material available for it are provided by IBM under terms of the IBM Customer Agreement, IBM International Program License Agreement, or any equivalent agreement between us.

Any performance data contained herein was determined in a controlled environment. Therefore, the results obtained in other operating environments may vary significantly. Some measurements may have been made on development-level systems and there is no guarantee that these measurements will be the same on generally available systems. Furthermore, some measurement may have been estimated through extrapolation. Actual results may vary. Users of this document should verify the applicable data for their specific environment.

Information concerning non-IBM products was obtained from the suppliers of those products, their published announcements or other publicly available sources. IBM has not tested those products and cannot confirm the accuracy of performance, compatibility or any other claims related to non-IBM products. Questions on the capabilities of non-IBM products should be addressed to the suppliers of those products.

All statements regarding IBM's future direction or intent are subject to change or withdrawal without notice, and represent goals and objectives only.

All IBM prices shown are IBM's suggested retail prices, are current and are subject to change without notice. Dealer prices may vary.

This information is for planning purposes only. The information herein is subject to change before the products described become available.

This information contains examples of data and reports used in daily business operations. To illustrate them as completely as possible, the examples include the names of individuals, companies, brands, and products. All of these names are fictitious and any similarity to the names and addresses used by an actual business enterprise is entirely coincidental.

COPYRIGHT LICENSE:

This information contains sample application programs in source language, which illustrates programming techniques on various operating platforms. You may copy, modify, and distribute these sample programs in any form without payment to IBM, for the purposes of developing, using, marketing or distributing application programs conforming to the application programming interface for the operating platform for which the sample programs are written. These examples have not been thoroughly

tested under all conditions. IBM, therefore, cannot guarantee or imply reliability, serviceability, or function of these programs. You may copy, modify, and distribute these sample programs in any form without payment to IBM for the purposes of developing, using, marketing, or distributing application programs conforming to IBM's application programming interfaces.

Each copy or any portion of these sample programs or any derivative work, must include a copyright notice as follows:

© (your company name) (year). Portions of this code are derived from IBM Corp. Sample Programs. © Copyright IBM Corp. _enter the year or years_. All rights reserved.

This product includes cryptographic software written by Eric Young.

If you are viewing this information softcopy, photographs and color illustrations may not appear.

You can obtain softcopy from the z/OS Collection (SK3T-4269), which contains BookManager and PDF formats of unlicensed books and the z/OS Licensed Product Library (LK3T-4307), which contains BookManager and PDF formats of licensed books.

Trademarks

The following terms are trademarks of the IBM Corporation in the United States or other countries or both:

ACF/VTAM
Advanced Peer-to-Peer Networking
AFP
AD/Cycle
AIX
AIX/ESA
AnyNet
APL2
AS/400
AT
BookManager
BookMaster
CBPDO
C/370
CICS
CICS/ESA
C/MVS
Common User Access
C Set ++
CT
CUA
DATABASE 2
DatagLANce
DB2
DFSMS
DFSMSdfp
DFSMShsm
DFSMS/MVS
DPI
Domino
DRDA
eNetwork
Enterprise Systems Architecture/370
ESA/390
ESCON
eServer
ES/3090
ES/9000
ES/9370
EtherStreamer
Extended Services
FAA
Micro Channel
MVS
MVS/DFP
MVS/ESA
MVS/SP
MVS/XA
MQ
Natural
NetView
Network Station
Nways
Notes
NTune
NTuneNCP
OfficeVision/MVS
OfficeVision/VM
Open Class
OpenEdition
OS/2
OS/390
OS/400
Parallel Sysplex
Personal System/2
PR/SM
PROFS
PS/2
RACF
Resource Link
Resource Measurement Facility
RETAIN
RFM
RISC System/6000
RMF
RS/6000
S/370
S/390
SAA
SecureWay
Slate
SP
SP2
SQL/DS
System/360

FFST
FFST/2
FFST/MVS
First Failure Support Technology
GDDM
Hardware Configuration Definition
IBM
IBMLink
IBMLINK
IMS
IMS/ESA
InfoPrint
Language Environment
LANStreamer
Library Reader
LPDA
MCS
System/370
System/390
SystemView
Tivoli
TURBOWAYS
UNIX System Services
Virtual Machine/Extended Architecture
VM/ESA
VM/XA
VSE/ESA
VTAM
WebSphere
XT
z/Architecture
z/OS
z/OS.e
zSeries
400
3090
3890

Lotus, Freelance, and Word Pro are trademarks of Lotus Development Corporation in the United States, or other countries, or both.

Tivoli and NetView are trademarks of Tivoli Systems Inc. in the United States, or other countries, or both.

DB2 and NetView are registered trademarks of International Business Machines Corporation or Tivoli Systems Inc. in the U.S., other countries, or both.

The following terms are trademarks of other companies:

ATM is a trademark of Adobe Systems, Incorporated.

BSC is a trademark of BusiSoft Corporation.

CSA is a trademark of Canadian Standards Association.

DCE is a trademark of The Open Software Foundation.

HYPERchannel is a trademark of Network Systems Corporation.

UNIX is a registered trademark in the United States, other countries, or both and is licensed exclusively through X/Open Company Limited.

Microsoft, Windows, Windows NT, and the Windows logo are trademarks of Microsoft Corporation in the United States, other countries, or both.

ActionMedia, LANDesk, MMX, Pentium, and ProShare are trademarks of Intel Corporation in the United States, other countries, or both. For a complete list of Intel trademarks, see http://www.intel.com/sites/corporate/tradmarx.htm .

Other company, product, and service names may be trademarks or service marks of others.

Communicating Your Comments to IBM

If you especially like or dislike anything about this document, please use one of the methods listed below to send your comments to IBM. Whichever method you choose, make sure you send your name, address, and telephone number if you would like a reply.

Feel free to comment on specific errors or omissions, accuracy, organization, subject matter, or completeness of this document. However, the comments you send should pertain to only the information in this manual and the way in which the information is presented. To request additional publications, or to ask questions or make comments about the functions of IBM products or systems, you should talk to your IBM representative or to your IBM authorized remarketer.

When you send comments to IBM, you grant IBM a nonexclusive right to use or distribute your comments in any way it believes appropriate without incurring any obligation to you.

If you are mailing a readers' comment form (RCF) from a country other than the United States, you can give the RCF to the local IBM branch office or IBM representative for postage-paid mailing.

- If you prefer to send comments by mail, use the RCF at the back of this document.
- If you prefer to send comments by FAX, use this number: 1-800-254-0206
- If you prefer to send comments electronically, use this network ID: usib2hpd@vnet.ibm.com

Make sure to include the following in your note:

- Title and publication number of this document
- Page number or topic to which your comment applies.

© Copyright IBM Corp. 1984, 2002

Readers' Comments — We'd Like to Hear from You

z/OS Communications Server
SNA Messages
Version 1 Release 4

Publication No. SC31-8790-02

Overall, how satisfied are you with the information in this book?

	Very Satisfied	Satisfied	Neutral	Dissatisfied	Very Dissatisfied
Overall satisfaction	☐	☐	☐	☐	☐

How satisfied are you that the information in this book is:

	Very Satisfied	Satisfied	Neutral	Dissatisfied	Very Dissatisfied
Accurate	☐	☐	☐	☐	☐
Complete	☐	☐	☐	☐	☐
Easy to find	☐	☐	☐	☐	☐
Easy to understand	☐	☐	☐	☐	☐
Well organized	☐	☐	☐	☐	☐
Applicable to your tasks	☐	☐	☐	☐	☐

Please tell us how we can improve this book:

Thank you for your responses. May we contact you? ☐ Yes ☐ No

When you send comments to IBM, you grant IBM a nonexclusive right to use or distribute your comments in any way it believes appropriate without incurring any obligation to you.

Name _____ Address _____

Company or Organization _____

Phone No. _____

Readers' Comments — We'd Like to Hear from You
SC31-8790-02

IBM

Cut or Fold
Along Line

Fold and Tape | **Please do not staple** | Fold and Tape

NO POSTAGE
NECESSARY
IF MAILED IN THE
UNITED STATES

BUSINESS REPLY MAIL

FIRST-CLASS MAIL PERMIT NO. 40 ARMONK, NEW YORK

POSTAGE WILL BE PAID BY ADDRESSEE

IBM Corporation
Software Reengineering
Department G7IA/ Bldg 503
Research Triangle Park, NC
27709-9990

Fold and Tape | **Please do not staple** | Fold and Tape

SC31-8790-02

Cut or Fold
Along Line

Program Number: 5694–A01 and 5655–G52

Printed in U.S.A.

SC31-8790-02

Spine information:

z/OS Communications Server z/OS V1R4.0 CS: SNA Messages Version 1 Release 4