z/OS

JES2 Commands

SA22-7526-03

z/OS

JES2 Commands

SA22-7526-03

Note

Before using this information and the product it supports, be sure to read the general information under “Notices” on page 863.

Fourth Edition, September 2002

This is a major revision of SA22-7526-02.

This edition applies to Version 1 Release 4 of z/OS (5694-A01), Version 1 Release 4 of z/OS.e (5694-G52), and to all subsequent releases and modifications until otherwise indicated in new editions.

Order documents through your IBM® representative or the IBM branch office serving your locality. Documents are not stocked at the address below.

IBM welcomes your comments. A form for readers’ comments may be provided at the back of this document, or you may address your comments to the following address:

International Business Machines Corporation
Department 55JA, Mail Station P384
2455 South Road
Poughkeepsie, NY 12601-5400
United States of America

FAX (United States & Canada): 1+845+432-9405
FAX (Other Countries):
Your International Access Code +1+845+432-9405

IBMLink™ (United States customers only): IBMUSM10(MHVRCFS)
Internet e-mail: mhvrcfs@us.ibm.com
World Wide Web: http://www.ibm.com/servers/eserver/zseries/zos/webqs.html

If you would like a reply, be sure to include your name, address, telephone number, or FAX number.

Make sure to include the following in your comment or note:
- Title and order number of this document
- Page number or topic related to your comment

When you send information to IBM, you grant IBM a nonexclusive right to use or distribute the information in any way it believes appropriate without incurring any obligation to you.

© Copyright International Business Machines Corporation 1988, 2002. All rights reserved.
US Government Users Restricted Rights – Use, duplication or disclosure restricted by GSA ADP Schedule Contract with IBM Corp.

Contents

Figures xi

Tables xiii

About this document xv
Who should use this document xv
Where to find more information xv
Accessing z/OS™ licensed documents on the Internet xv
Using LookAt to look up message explanations xvi
Additional information xvi
Determining If a Publication Is Current xvii

Summary of changes xix

Chapter 1. Controlling JES2 1
Controlling the JES2 Environment 5
Specifying the Start Options 6
Displaying Status of JES2 11
Restarting JES2 11
Stopping JES2 14
Withdrawing JES2 from the System 14
Specifying JES2 Exit Point Characteristics 14
Monitoring Buffers 15
Controlling Your MAS Environment 15
Using Independent Mode Processing 15
Displaying Status and Settings of the MAS 16
Using JES2 and MVS Commands Together 16
Changing Settings of the MAS 17
Making Jobs Eligible to Restart 18
Controlling Automatic Command Processing 19
Controlling JES2 Diagnostics 20
Controlling JES2 Tracing 20
Recovering From Errors 20
Debugging Errors 21
Displaying Module Information 21
Controlling JES2 Spooling 21
Spool Addressing Modes 21
Considerations for Draining a Spool Volume 22
Controlling Spool Partitioning 22
Spool Volume States 22

Chapter 2. Controlling JES2 Devices and Functional Subsystems 25
Overview of Devices 31
Controlling the Device Environment 32
JES2 Input Processing 33
Controlling Readers 33
JES2 Output Processing 34
Controlling Printers 35
Controlling Punches 37
Remote Job Entry (RJE) 37
Specifying JES2 Teleprocessing Characteristics 38
Remote Entry Restrictions 39
Controlling Spool Offload and Reload Functions 46

© Copyright IBM Corp. 1988, 2002

Controlling Offload Devices 46
Controlling Offload Transmitters and Receivers 47

Chapter 3. Controlling Jobs and Output 49
Controlling Jobs 54
Controlling the Scope of Commands 54
Displaying Job Information 55
Controlling Job Execution 57
Controlling JES2 Initiators 57
Controlling WLM Initiators 58
Specifying JES2 Job Characteristics 59
JES2 Job Execution Commands 59
Holding and Releasing Jobs 60
Controlling Jobs at Another Node 61
Controlling Job Output 62
Specifying Job Output Characteristics 62
JES2 Job Output Commands 66
Controlling Output Groups and Job Output Elements 67

Chapter 4. Controlling a Network 69
Controlling the NJE Environment 72
Specifying Node Characteristics 73
Modifying Transmission Delays and Excessive Looping Through a Network 73
Modifying Sign-on Tolerance 73
Defining a Symbolic Destination Name 74
Deleting a Symbolic Destination Name 74
Displaying Subnets and their Paths Across a Network 74
Displaying Node Attributes. 75
Setting Node Attributes 75
Starting NJE Communications 76
Starting Node Communication on a BSC Line 76
Starting Node Communication Using SNA/VTAM 77
Controlling the JES2/VTAM Interface 78
Defining and Changing Applications 78
Controlling NJE Lines 79
Controlling NJE Static Connections 80
Controlling JES2 Transmitting and Receiving Devices 81
Sending Messages and Commands Through the Network 81
Displaying and Controlling Jobs at Other Nodes. 82

Chapter 5. Command Reference Section 83
Command Reference Section 83
Command Syntax Conventions 83
How to read syntax diagrams 101
Keywords defined 103
$A A - Release All Jobs 105
$A Job - Release Held Jobs 106
$ACTIVATE - Activate New Functions at the Current Release of JES 111
$ADD APPL - Define a VTAM Application to JES2 113
$ADD CONNECT - Dynamically Add Network Connections 115
$ADD DESTID - Define a Symbolic Destination 118
$ADD FSS - Define a Functional Subsystem 123
$ADD LINE(nnnn) - Add Line 125
$ADD LOGON (nn) - Add a Logon 130
$ADD PROCLIB(xxxxxxxx) - Define a New Dynamic PROCLIB Concatenation 132
$ADD PRT - Define a Local Printer 135

$ADD REDIRECT - Set Redirection for Commands 149
$ADD RMT(nnnn) - Add an RJE Workstation 152
$B PRTnnnn and $B Rnnnn.PRm - Logically Backspace Printer Output . . . 161
$B PUNnn and $B Rnnnn.PUm - Logically Backspace Punch Output 164
$C A - Cancel Automatic Commands 166
$C Job - Cancel a Job 168
$C Lnnnn.xxn - Cancel NJE Device Activity 174
$C O Job - Cancel Output 176
$C OFFn.xx - Cancel a Spool Offload Transmitter/Receiver 182
$C PRTnnnn and $C Rnnnn.PRm - Cancel Printer Output 184
$C PUNnn and $C Rnnnn.PUm - Cancel Punch Output 185
$C RDR and $C Rnnnn.RDm - Cancel Reader Activity. 186
$D A - Display Information About Currently Active Jobs. 187
$D ACTIVATE - Display Current JES2 Checkpoint Set by $ACTIVATE 191
$D ACTRMT - Display Active RJE Workstations in a MAS 193
$D APPL - Display JES2 SNA NJE Application(s). 195
$D BUFDEF - Display JES2 Buffer Definitions 198
$D CKPTDEF - Display the Checkpoint Definition 200
$D CKPTSPACE - Display Checkpoint Spaces. 204
$D COMPACT - Display JES2 Compaction Tables 206
$D CONDEF - Display Console Communication Characteristics 208
$D CONNECT - Display Network Connections 211
$D DESTDEF - Display Symbolic Destination Settings 215
$D DEStid - Display a JES2 Symbolic Destination 217
$D ESTBYTE - Display Number of Bytes Set for Jobs and their Output . . . 220
$D ESTLNCT - Display Number of Lines for Jobs and their Output 221
$D ESTPAGE - Display Number of Pages Set for Jobs and their Output . . . 222
$D ESTPUN - Display Number of Punch Pages Set for Jobs and their Output 223
$D ESTIME - Display Amount of Time Set for Jobs and their Output. 224
$D EXIT - Display Current Characteristics of Specified JES2 Exit Points . . . 225
$D F - Display the Job Output Forms Queue 228
$D FSS - Display the Characteristics of the Specified Functional Subsystems 232
$D INITDEF - Display the Number of Logical Initiators Currently Defined . . . 234
$D I[nnmm] - Display Initiator Information. 235
$D INTRDR - Display the Current INTRDR Initialization Statement
Characteristics. 239
$D Job - Display Information About Specified Jobs 241
$D JOBCLASS(n) - Display Job Class Characteristics 251
$D JOBDEF - Display Characteristics Assigned to Jobs 257
$D JOBPRTY - Display Current Job Priority Characteristics 260
$D L(nnnn).JR(n) - Display Line and Job Receiver Status. 261
$D L(nnnn).JT(n) - Display the Job Transmitter Status 264
$D L(nnnn).SR(n) - Display SYSOUT Receiver Status 267
$D L(nnnn).ST(n) - Display SYSOUT Transmitter Status 270
$D LINE(nnnn) - Display a Line 273
$D LOADmod(jxxxxxxx) - Display Load Module Information 279
$D LOGON - Display the Status of JES2/VTAM Interface(s) and their
Characteristics. 282
$D M - Send a Message 284
$D MASDEF - Display the Multi-access Spool Environment 288
$D MEMBer - Display Information about MAS Members 291
$D MODule(jxxxxxxx) - Display Assembled Module Information 296
$D N - Display Job Queue Information. 303
$D NETACCT - Display Networking Account Numbers 309
$D NJEDEF - Display the JES2 Network Environment 311
$D NODE(nnnn) - Display a Node's Characteristics 314

$D O Job - Display Output Characteristics 319
$D OFF.JR - Display Offload Job Receiver 328
$D OFF.JT - Display Offload Job Transmitter 332
$D OFF.SR - Display Offload SYSOUT Receiver 336
$D OFF.ST - Display Offload SYSOUT Transmitter 344
$D OFFLOAD - Display Offload Devices 350
$D OPTsdef - Display Start Options Processing Definitions 353
$D OUTCLASS - Display Output Classes. 355
$D OUTDEF - Display Output Definition Options 357
$D OUTPRTY - Display Job Output Priority 360
$D PATH - Display Paths from Node to Node 362
$D PCE - Display Tracing Status for JES2 Processors 364
$D PCEDEF - Display PCE Definitions 370
$D PRINTDEF - Display Print Environment Characteristics 371
$D PROCLIB(xxxxxxxx) - Display a Dynamic PROCLIB Concatenation 373
$D PRTnnnn and $D R(nnnn).PR(m) - Display Printers 376
$D PUNCHDEF - Display Punch Environment Characteristics 386
$D PUN(nn) and $D R(nnnn).PU(m) - Display a Remote Punch 388
$D Q - Display the Number of Jobs Queued 392
$D R(nn).CON(mm) - Display the Specified Remote Console 397
$D RDI - Display the Status of JES2-Controlled Internal Reader 399
$D RDR(nn) and $D R(nn).RD(mm) - Display Command Authority for a Reader 402
$D REBLD - Display Rebuild Queue Information 406
$D RECVopts - Display Current RECVOPTS Settings 408
$D REDIRect - Redirect Command Responses 410
$D REQJOBID - Display Attributes of JOBID Address Spaces 412
$D SMFDEF - Display Status of SMF Buffers 413
$D SPOOL - Display the Status of Spool Volumes 415
$D SPOOLDEF - Display the JES2 Spooling Environment 419
$D SSI(nnn) - Display Subsystem Interface Function Information 422
$D SUBTDEF - Display Subtask Definitions 424
$D SUBNET - Display Subnet Connections 425
$D TPDEF - Display Current Teleprocessing Characteristics 427
$D TRace(nnn) - Display Current Status of Trace IDs 430
$D TRACEDEF - Display Current Trace Environment Characteristics 432
$D U - Display the Status of JES2-Controlled Devices 434
$DEL CONNect - Delete Network Connections. 439
$DEL DEStid - Delete a Symbolic Destination 441
$DEL PROCLIB(xxxxxxxx) - Delete a Dynamic PROCLIB Concatenation . . . 443
$E CKPTLOCK, HELDBY - Reset the Checkpoint Lock 446
$E Job - Restart a Job 449
$E Lnnnn.xxn - Restart NJE Device Activity 453
$E LINE(nnnn) - Restart Line Activity 455
$E LOGON(nn) - Restart the JES2/VTAM Interface 457
$E MEMBer - Restart Jobs from a Failed Member in a MAS. 458
$E OFFn.xx - Restart a Spool Offload Transmitter 462
$E PRTnnnn and $E Rnnnn.PRm - Restart Printer Activity 463
$E PUNnn and $E Rnnnn.PUm - Restart Punch Activity 464
$F PRTnnnn and $F Rnnnn.PRm - Logically Advance Printer Output 465
$F PUNnn and $F Rnnnn.PUm - Logically Advance Punch Output 468
$G A - Release a Job at Another Node 470
$G C - Cancel a Job at Another Node 472
$G D - Display Job Information for a Job at Another Node 474
$G H - Hold a Job at Another Node. 476
$G R, OUT - Request Another Node to Route Job Output 478
$G R, XEQ - Request Another Node to Route a Job for Execution 481

$H A - Hold All Jobs 484
$H Job - Hold Specific Jobs 486
$JDDETAILS - Display details summary of jobs 491
$JDHISTORY - Display history of JES2 resource usage 494
$JDJES - Display non-severe incident report 497
$JDMONITOR - Display current status of JES2 monitor subtasks 499
$JDSTATUS - Display current status 501
$JSTOP - Terminate monitor address space. 503
$I PRTnnnn and $I Rnnnn.PRm - Interrupt Printer Activity 505
$I PUNnn and $I Rnnnn.PUm - Interrupt Punch Activity 507
$L Job - List Job Output Information 508
$Mnn - Send Commands to Other MAS Members 511
$Nnnnn - Send Commands through the Network 512
$N PRTnnnn and $N Rnnnn.PRm - Repeat Printer Output 514
$N PUNnn and $N Rnnnn.PUm - Repeat Punch Output 515
$O Job - Release or Cancel Held Output Groups. 516
$P - Stop JES2 Processing 521
$P I[nnmm] - Stop an Initiator 522
$P JES2 - Withdraw JES2 from the System. 524
$P Job - Purge a Job 527
$P Lnnnn.xxn - Stop an NJE Device 532
$P LINE(nnnn) - Stop a Line 533
$P LOGON(nn) - Stop the JES2/VTAM Interface 534
$P O Job - Purge a Job's Output. 535
$P OFFn.xx - Stop an Offload Transmitter/Receiver 541
$P OFFLOADn - Stop an Offload Device 543
$P PRTnnnn and $P Rnnnn.PRm - Stop a Printer 544
$P PUNnn and $P Rnnnn.PUm - Stop a Punch 546
$P RDRnn and $P Rnnnn.RDm - Stop a Reader 547
$P RMT(nnnn) - Terminate a Remote Terminal Connection 548
$P SPOOL - Drain a Spool Volume 549
$P TRace - Stop a Trace ID 552
$P XEQ - Prevents JES2 and WLM-Controlled Initiators from Work 553
$R - Route Job Output 554
$R XEQ - Route Specific Jobs for Execution 559
$S - Start System Activity 561
$S A - Start Automatic Command Processing 562
$S I[vvvv] - Start an Initiator 563
$S Job - Initiate a Batch Job into Execution. 565
$S Lnnnn.xxn - Start an NJE Device 567
$S LINE(nnnn) - Start a Line 569
$S LOGON - Start the JES2/VTAM Interface 571
$S N - Start Node Communication on a BSC Line 573
$S N - Start Node Communication on a SNA Line 576
$S OFFn.xxn - Start Offload Transmitters and Receivers 578
$S OFFLOADn - Start an Offload Device. 580
$S PRTnnnn and $S Rnnnn.PRm - Start a Printer 582
$S PUNnn and $S Rnnnn.PUm - Start a Punch 584
$S RDRnn and $Rnnnn.RDm - Start a Reader. 586
$S RMT(nn) - Automatically Connect a Remote Terminal 587
$S SPOOL - Start a Spool Volume 589
$S TRACE(nn) - Start a Trace ID. 592
$S XEQ - Allow JES2 and WLM-Controlled Initiators to Select Work. 594
$T A - Display, Specify, and Modify Automatic Commands 595
$T APPL - Control JES2 Applications 600
$T BUFDEF - Control Local Buffers. 603

$T CKPTDEF - Set the Checkpoint Definition 605
$T CKPTSPACE - Set the Checkpoint Space 612
$T CONDEF - Set Console Communication Characteristics 613
$T CONNect - Change Static Network Connections 616
$T DEBUG - Set the JES2 DEBUG Option 619
$T DESTDEF - Control JES2 Symbolic Destination Displays 622
$T DEStid - Control a JES2 Symbolic Destination 624
$T ESTBYTE - Control the Default Spool Space Utilization Per Job 630
$T ESTIME - Control the Default Execution Time 632
$T ESTLNCT - Control the Default Print Line Count Per Job 634
$T ESTPAGE - Control the Default Page Count Per Job 636
$T ESTPUN - Control the Default Punched Card Output Per Job 638
$T EXIT(nn) - Control JES2 Installation Exit Points 640
$T FSS - Control a Functional Subsystem 642
$T Init - Control Initiators 644
$T INTRDR - Control Internal Readers. 647
$T Job - Change a Job's Class, Scheduling Priority, or Affinity 651
$T JOBCLASS - Set Job Class Characteristics 659
$T JOBDEF - Set Job Processing Characteristics. 668
$T JOBPRTY(n) - Set Job Scheduling Characteristics 673
$T L(nn).JT(nn) - Specify Network Job Transmitter Characteristics 675
$T L(nnnn).ST(n) - Specify Network SYSOUT Transmitter Characteristics 678
$T LINE(nnnn) - Control a Line 682
$T LOGON(n) - Control the JES2/VTAM Interface 689
$T MASDEF - Control the Multi-Access Spool Environment 692
$T MEMBer - Change a Member's Operational Mode 695
$T NJEDEF - Control JES2 Network Environment 699
$T NODE(nnnn) - Set a Node's Characteristics 703
$T NUM - Set the JES2 Internal Job Numbers 711
$T O Job - Set Output Characteristics 712
$T OFF(nn).JR - Set Offload Job Receiver Characteristics 722
$T OFF(nn).JT - Set Offload Job Transmitter Characteristics. 728
$T OFF(n).SR - Set Offload SYSOUT Receiver Characteristics. 735
$T OFF(n).ST - Set Offload SYSOUT Transmitter Characteristics 743
$T OFFLOAD(n) - Set Offload Device Characteristics 752
$T OUTCLASS(n) - Set SYSOUT Class Characteristics 756
$T OUTDEF - Set Job Output Characteristics 759
$T OUTPRTY(n) - Set Output Scheduling Priorities 763
$T PCE - Trace All JES2 Processors of a Given Type 765
$T PRINTDEF - Control the JES2 Print Environment 769
$T PROCLIB(xxxxxxxx) - Modify an Existing Dynamic PROCLIB Concatenation 771
$T PRTnnnn and $T Rnnnn.PRm - Control a Printer 775
$T PUNnn and $T Rnnnn.PUm - Control a Punch 795
$T RDRnn and $T Rnnnn.RDm - Control a Reader 806
$T RECVopts - Set JES2 Recovery Options. 813
$T REDIRect - Redirect Command Responses 815
$T RMT(nn) - Change an RJE Workstation 818
$T REQJOBID - Set JOBID attributes. 831
$T SMFDEF - Control SMF Buffers 833
$T SPOOL - Modify a Spool Volume 834
$T SPOOLDEF - Set the JES2 Spooling Environment 836
$T SSI(nnn) - Control the Subsystem Interface Definition 839
$T TPDEF - Set JES2 Teleprocessing Characteristics 841
$T TRACEDEF - Control the Trace Facility 844
$VS - Enter MVS System Commands through JES2 846
$Z A - Halt Automatic Command Processing 847

$ZAPJOB - Remove Job Structure from Job Queue 849
$Z I[vvvv] - Halt Initiator Activity 851
$Z OFFLOADn - Halt Offload Activity 853
$Z PRTnnnn and $Z Rnnnn.PRm - Halt Printer Activity. 854
$Z PUNnn and $Z Rnnnn.PUm - Halt Punch Activity 855
$Z RDRnn - Halt Reader Activity 856
$Z SPOOL - Halt a Spool Volume 857

Appendix A. Notes About the Publication Index 859

Appendix B. Accessibility 861
Using assistive technologies 861
Keyboard navigation of the user interface. 861

Notices 863
Programming Interface Information 864
Trademarks. 865

Index 867

Figures

1. Specify Output Dispositions 65

© Copyright IBM Corp. 1988, 2002

Tables

1. Controlling the JES2 Environment . . . 1
2. Controlling Your Multi-access Spool (MAS) Environment . . . 2
3. Controlling Automatic Command Processing . . . 3
4. Controlling JES2 Diagnostics . . . 4
5. Controlling JES2 Spooling . . . 5
6. JES2/MVS Commands . . . 5
7. JES2 Start Options . . . 8
8. Types of JES2 Warm Start . . . 12
9. Controlling the Device Environment . . . 25
10. Controlling Readers . . . 25
11. Controlling Printers . . . 26
12. Controlling Punches . . . 27
13. Controlling the JES2/VTAM Interface . . . 28
14. Controlling RJE Lines . . . 29
15. Controlling RJE Workstations . . . 29
16. Controlling Offload Devices . . . 30
17. Remote Entry Restrictions ($A-$D) . . . 40
18. Remote Entry Restrictions ($E-$O) . . . 41
19. Remote Entry Restrictions ($P-$S) . . . 42
20. Remote Entry Restrictions ($S-$T) . . . 43
21. Remote Entry Restrictions ($T-$Z) . . . 44
22. Displaying JES2 Job Information . . . 49
23. Specifying Job Execution Characteristics . . . 50
24. Controlling Initiators . . . 50
25. Controlling Job Execution . . . 51
26. Holding and Releasing Jobs . . . 51
27. Controlling Jobs at Another Node . . . 52
28. Specifying Job Output Characteristics . . . 53
29. Controlling Output . . . 54
30. Changing Output Characteristics for SYSOUT Data . . . 63
31. Specifying Node Characteristics . . . 69
32. Starting BSC Node Communications . . . 70
33. Starting SNA Node Communications . . . 70
34. Controlling the JES2/VTAM Interface . . . 70
35. Defining and Changing Applications . . . 71
36. Controlling NJE Lines . . . 71
37. Controlling NJE Static Connections . . . 71
38. Controlling NJE Devices . . . 72
39. Sending Messages and Commands Through the Network . . . 72
40. Command Syntax Character Meanings . . . 83
41. Command Syntax Conventions . . . 83
42. Coding Asterisks on Initialization Statements . . . 92
43. Numeric Only (used for most devices, such as PRT, PUN, LINE, RMT) . . . 94
44. Symbolic Only (REDIRECT, APPL, JOBCLASS, OUTCLASS, SPOOL) . . . 95
45. Numeric and Symbolic (NODE, MEMBER, INIT.) . . . 96
46. JES2 Processing of Initiators . . . 97
47. Syntax examples . . . 102
48. Printer Work Selection Values . . . 147
49. JES2 BUFSIZE Defaults for RJE Workstations . . . 154
50. $D U Messages . . . 437
51. SYSOUT Transmitter Work Selection Criteria . . . 677
52. SYSOUT Transmitter Work Selection and Output Criteria . . . 681
53. Offload Job Transmitter Work Selection Criteria . . . 733

© Copyright IBM Corp. 1988, 2002

54. Offload SYSOUT Transmitter Work Selection Criteria 750
55. Printer Work Selection Criteria 793
56. Punch Work Selection Criteria 804
57. JES2 BUFSIZE Minimum Buffer Size Requirements for RJE Workstations 821

About this document

This document describes the commands that operate the JES2 element of z/OS and z/OS.e. Use this document with *z/OS MVS System Commands*, which provides basic MVS system information, in any JES2 complex that runs z/OS.

JES2 can operate in two modes; Full function mode (z2) or compatibility mode (R4). Unless otherwise stated all discussion in this document assume JES2 is running in z2 mode. For more discussion about the two modes and how to switch between the two modes, see the $ACTIVATE command.

Who should use this document

This document is intended for use by a system console operator who controls JES2 on a system running under MVS.

Where to find more information

This document references other publications for further details about specific topics. The following table lists these publications, the abbreviated forms of their titles used throughout this document, and their order numbers.

Short Title Used in This document	Title	Order Number
z/OS Communications Server: SNA Operation	*z/OS Communications Server: SNA Operation*	SC23-0113
z/OS Communications Server: SNA Migration	*z/OS Communications Server: SNA Migration*	SC23-0111
NJE with JES2 and Other Systems	*NJE with JES2 and Other Systems*	GG22-9339
	Operator's Library: z/OS Remote Terminals (JES2)	GC38-0228
	SDSF Guide And Reference	SC23-0408

Most licensed documents were declassified in z/OS V2R4 and are now included on the z/OS Online Library Collection, SK2T-6700. The remaining licensed documents appear in unencrypted documentManager softcopy and PDF form on the z/OS Licensed Product Library, LK2T-2499.

Accessing z/OS™ licensed documents on the Internet

z/OS licensed documentation is available on the Internet in PDF format at the IBM Resource Link™ Web site at:

`http://www.ibm.com/servers/resourcelink`

Licensed documents are available only to customers with a z/OS license. Access to these documents requires an IBM Resource Link user ID and password, and a key code. With your z/OS order you received a Memo to Licensees, (GI10-0671), that includes this key code. [1]

To obtain your IBM Resource Link user ID and password, log on to:

`http://www.ibm.com/servers/resourcelink`

1. z/OS.e™ customers received a Memo to Licensees, (GI10-0684) that includes this key code.

© Copyright IBM Corp. 1988, 2002

To register for access to the z/OS licensed documents:

1. Sign in to Resource Link using your Resource Link user ID and password.
2. Select **User Profiles** located on the left-hand navigation bar.

Note: You cannot access the z/OS licensed documents unless you have registered for access to them and received an e-mail confirmation informing you that your request has been processed.

Printed licensed documents are not available from IBM.

You can use the PDF format on either **z/OS Licensed Product Library CD-ROM** or IBM Resource Link to print licensed documents.

Using LookAt to look up message explanations

LookAt is an online facility that allows you to look up explanations for most messages you encounter, as well as for some system abends and codes. Using LookAt to find information is faster than a conventional search because in most cases LookAt goes directly to the message explanation.

You can access LookAt from the Internet at:

`http://www.ibm.com/eserver/zseries/zos/bkserv/lookat/`

or from anywhere in z/OS where you can access a TSO/E command line (for example, TSO/E prompt, ISPF, z/OS UNIX System Services running OMVS). You can also download code from the *z/OS Collection* (SK3T-4269) and the LookAt Web site that will allow you to access LookAt from a handheld computer (Palm Pilot VIIx suggested).

To use LookAt as a TSO/E command, you must have LookAt installed on your host system. You can obtain the LookAt code for TSO/E from a disk on your *z/OS Collection* (SK3T-4269) or from the **News** section on the LookAt Web site.

Some messages have information in more than one document. For those messages, LookAt displays a list of documents in which the message appears.

Additional information

Additional information about z/OS elements can be found in the following documents.

Title	Order Number	Description
z/OS Introduction and Release Guide	GA22-7502	Describes the contents and benefits of z/OS as well as the planned packaging and delivery of this new product.
z/OS and z/OS.e Planning for Installation	GA22-7504	Contains information that lets users: • Understand the content of z/OS • Plan to get z/OS up and running • Install the code • Take the appropriate migration actions • Test the z/OS system
z/OS Information Roadmap	SA22-7500	Describes the information associated with z/OS including z/OS documents and documents for the participating elements.

Title	Order Number	Description
z/OS Summary of Message Changes	SA22-7505	Describes the changes to messages for individual elements of z/OS. **Note:** This document is provided in softcopy only on the message bookshelf of the z/OS collection kit.

Determining If a Publication Is Current

As needed, IBM updates its publications with new and changed information. For a given publication, updates to the hardcopy and associated BookManager softcopy are usually available at the same time. Sometimes, however, the updates to hardcopy and softcopy are available at different times. Here's how to determine if you are looking at the most current copy of a publication:

1. At the end of a publication's order number there is a dash followed by two digits, often referred to as the dash level. A publication with a higher dash level is more current than one with a lower dash level. For example, in the publication order number GC28-1747-07, the dash level 07 means that the publication is more current than previous levels, such as 05 or 04.
2. If a hardcopy publication and a softcopy publication have the same dash level, it is possible that the softcopy publication is more current than the hardcopy publication. Check the dates shown in the Summary of Changes. The softcopy publication might have a more recently dated Summary of Changes than the hardcopy publication.
3. To compare softcopy publications, you can check the last two characters of the publication's filename (also called the book name). The higher the number, the more recent the publication. Also, next to the publication titles in the CD-ROM booklet and the readme files, there is an asterisk that indicates whether a publication is new or changed.

Summary of changes

Summary of changes
for SA22-7526-03
z/OS Version 1 Release 4

This document contains information previously presented in *z/OS JES2 Commands*, SA22–7526–02, which supports z/OS Version 1 Release 3.

New information

- Information has been added to indicate this document supports z/OS.e.
- New section ″Keywords defined″ added to Chapter 5.
- New commands for the JES2 Monitor: $JDMONITOR, $JDSTATUS, $JDJES, $JDDETAILS, $JDHISTORY, $JDSTOP
- $D Job – New keyword added.
- $D OFFLOAD – New keyword added.
- $D JOBDEF – New keyword added: BAD_JOBNAME_CHAR.
- $D OPTSDEF – New keyword added.
- $HA–new information to clarify the ″Processing Considerations.″
- $O Job CANCEL keyword has a new ’Note.’
- $SN–note added to clarify ’A’ parameter.
- $T OFFLOAD – New keyword added.

Changed information

- Chapter 1–Clarified the Single member warm start conditions.
- Chapter 5–Route Codes example has been clarified.
- $C Job – Function description and examples have been updated.
- $DF command function has been clarified.
- $E CKPTLOCK, HELDBY has updated function description.
- $L Job syntax diagram has been clarified.
- $P, $PXEQ – $DMEMBER command will tell you if a $P, $PXEQ, or both are in effect.
- $T Job parameters have been clarified.
- $T O Job – Examples have been corrected.

Deleted information

- Information on $TA command indicating the maximum length is 80 characters.

This document contains terminology, maintenance, and editorial changes. Technical changes or additions to the text and illustrations are indicated by a vertical line to the left of the change.

Starting with z/OS V1R2, you may notice changes in the style and structure of some content in this document—for example, headings that use uppercase for the first letter of initial words only, and procedures that have a different look and format. The changes are ongoing improvements to the consistency and retrievability of information in our documents.

© Copyright IBM Corp. 1988, 2002

Summary of changes
for SA22-7526-02
z/OS Version 1 Release 3

This document contains information previously presented in *z/OS JES2 Commands*, SA22–7526–01, which supports z/OS Version 1 Release 2.

New information

- An appendix with z/OS product accessibility information has been added.

Changed information

- $D REQJOBID- SPIN parameter has been clarified.
- $T A- 'command' parameter example has been clarified.
- TIMEtol= keyword parameter on $T NJEDEF has been modified.

Deleted information

- Misplaced information in $D REQJOBID has been removed.

This document contains terminology, maintenance, and editorial changes. Technical changes or additions to the text and illustrations are indicated by a vertical line to the left of the change.

Summary of changes
for SA22-7526-01
z/OS Version 1 Release 2

This document contains information previously presented in *z/OS JES2 Commands*, SA22–7526–00, which supports z/OS Version 1 Release 1.

New information

- Updated ″About this document.″
- Table: ″JES2 Start Options″ has been updated for COLD starts.
- Chapter 1: Section: ″Spool Addressing Modes.″
- Chapter 3: New eight-character string forms in section ″Controlling Jobs.″
- $ACTIVATE has been introduced.
- $ADD LINE: JRNUM, JSNUM, SRNUM, STNUM
- $ADD PROCLIB: New command.
- $D Job: SPINNABLE keyword added.
- $D JOBCLASS: JESLOG keyword added.
- $D MEMBer: WAITING keyword added to STATUS.
- $D PCE has new parameters.
- $D PROCLIB: New command.
- $D SPOOL: New keyword under UNITDATA keyword: BASETRAK.
- $D SPOOLDEF: RELADDR keyword added.
- $DEL PROCLIB: New command.
- $T CHKPTDEF: MODE= parameter.
- $T CKPTSPACE: BERTNUM range is (200–500000).
- $T Job: New keyword SPIN.
- $T JOBCLASS: JESLOG keyword added.
- $T LINE: JRNUM, JSNUM, SRNUM, STNUM

- $T MEMBer: WAITING-WARMSTART-CLEANUP keyword added to STATUS.
- $T PCE has new parameters.
- $T PROCLIB: New command.
- $T RECVopts: New information in parameter ″type″ list.
- $T SPOOLDEF: New parameter RELADDR.

Changed information

- The ″Parameter Ranges″ definition in the Command Reference section has been clarified.
- $D ACTIVATE: Examples have been updated for z/OS.
- $D CKPTDEF: Examples have been updated for z/OS.
- $D ESTIME: OPT parameter has been corrected to show only two values, YES and NO.
- $D JOBCLASS: Examples have been updated for z/OS.
- $D RECVopts: Examples have been updated for z/OS.
- $D SPOOL: Examples have been updated for z/OS.
- $D SPOOLDEF has been clarified.
- JOBID variable format has been changed.
- JOBNUM parameter maximum value is 200000.
- $P JES2: Examples have been updated for z/OS.
- RANGE parameter maximum value is 999999.
- $TCKPTDEF documentation has been updated.
- TGSPACE=(MAX=nnn) parameter maximum value is 16581184.
- $T NUM: BASE parameter max range now 999999.
- $T OFFLOAD: RETPD minumum range is 0.

Deleted information

- APPLCOPY parameter has been deleted from $D CKPTDEF.
- A non-valid note regarding the JOBQ and JM parameters has been removed.
- $T DEBUG: APPLCOPY parameter.

Chapter 1. Controlling JES2

This chapter describes how to:

- Start, stop, and restart JES2
- Control the JES2 processing environment independent of devices, jobs, and networks. (Chapters 2 through 4 discuss devices, jobs, and networks, respectively.)

The following tables list the tasks discussed in this chapter and provide a cross reference to the detailed descriptions of the corresponding commands.

Table 1. Controlling the JES2 Environment

Task	Command	Location
Start JES2 processing	$S	"$S - Start System Activity" on page 561
Stop JES2 processing	$P	"$P - Stop JES2 Processing" on page 521
Withdraw JES2 from the system	$P JES2	"$P JES2 - Withdraw JES2 from the System" on page 524
Specify the characteristics of JES2 exit points	$T EXIT(nnn)	"$T EXIT(nn) - Control JES2 Installation Exit Points" on page 640
Monitor local buffers	$T BUFDEF	"$T BUFDEF - Control Local Buffers" on page 603
Monitor SMF buffers	$T SMFDEF	"$T SMFDEF - Control SMF Buffers" on page 833

© Copyright IBM Corp. 1988, 2002

Table 2. Controlling Your Multi-access Spool (MAS) Environment

Task	Command	Location
Change a member's operational mode	$T MEMBER(memname),IND=	"$T MEMBer - Change a Member's Operational Mode" on page 695
Display characteristics of the MAS	$D MASDEF	"$D MASDEF - Display the Multi-access Spool Environment" on page 288
Display the status of MAS members	$D MEMBER	"$D MEMBer - Display Information about MAS Members" on page 291
Redirect responses to commands entered at the entry console	$T REDIRECT	"$T REDIRect - Redirect Command Responses" on page 815
Control the MAS environment	$T MASDEF	"$T MASDEF - Control the Multi-Access Spool Environment" on page 692
Display the checkpoint definition	$D CKPTDEF	"$D CKPTDEF - Display the Checkpoint Definition" on page 200
Control the checkpoint definition	$T CKPTDEF	"$T CKPTDEF - Set the Checkpoint Definition" on page 605
Restart jobs from a failed member	$E MEMBER(member)	"$E MEMBer - Restart Jobs from a Failed Member in a MAS" on page 458
Reset the checkpoint lock	$E CKPTLOCK, HELDBY=	"$E CKPTLOCK, HELDBY - Reset the Checkpoint Lock" on page 446

Table 3. Controlling Automatic Command Processing

Task	Command	Location
Display, specify, and modify automatic commands	$T A	"$T A - Display, Specify, and Modify Automatic Commands" on page 595
Start automatic command processing	$S A	"$S A - Start Automatic Command Processing" on page 562
Halt automatic command processing	$Z A	"$Z A - Halt Automatic Command Processing" on page 847
Cancel automatic commands	$C A	"$C A - Cancel Automatic Commands" on page 166

Table 4. Controlling JES2 Diagnostics

Task	Command	Location
Specify the JES2 trace environment characteristics	$T TRACEDEF	"$T TRACEDEF - Control the Trace Facility" on page 844
Activate a trace identifier	$S TRACE(n)	"$S TRACE(nn) - Start a Trace ID" on page 592
Deactivate trace identifiers	$P TRACE(n)	"$P TRace - Stop a Trace ID" on page 552
Trace all JES2 processors of a given type (start/stop tracing)	$T PCE	"$T PCE - Trace All JES2 Processors of a Given Type" on page 765
Display tracing status for JES2 processors	$D PCE	"$D PCE - Display Tracing Status for JES2 Processors" on page 364
Control subsystem interface function tracing	$T SSI(n)	"$T SSI(nnn) - Control the Subsystem Interface Definition" on page 839
Control JES2 recovery options	$T RECVopts	"$T RECVopts - Set JES2 Recovery Options" on page 813
Control the JES2 debug option	$T DEBUG	"$T DEBUG - Set the JES2 DEBUG Option" on page 619
Display module information	$D MODULE	"$D MODule(jxxxxxxx) - Display Assembled Module Information" on page 296
Display load module information	$D LOADMOD	"$D L(nnnn).SR(n) - Display SYSOUT Receiver Status" on page 267
Display subsystem interface function information	$D SSI	"$D SSI(nnn) - Display Subsystem Interface Function Information" on page 422

Table 5. Controlling JES2 Spooling

Task	Command	Location
Display spool volume usage	$D SPOOL	"$D SPOOL - Display the Status of Spool Volumes" on page 415
Start a spool volume	$S SPOOL	"$S SPOOL - Start a Spool Volume" on page 589
Control the JES2 spool volume	$T SPOOL	"$T SPOOL - Modify a Spool Volume" on page 834
Control the JES2 spooling environment	$T SPOOLDEF	"$T SPOOLDEF - Set the JES2 Spooling Environment" on page 836
Drain a spool volume	$P SPOOL	"$P SPOOL - Drain a Spool Volume" on page 549
Halt a spool volume	$Z SPOOL	"$Z SPOOL - Halt a Spool Volume" on page 857

Table 6. JES2/MVS Commands

Task	Command	Location
Enter MVS system commands through JES2	$VS	"$VS - Enter MVS System Commands through JES2" on page 846
Display operator requests	D(DISPLAY) R	16
Start JES2	S JES2	5
Halt the system and preserve MVS statistics and data records	HALT EOD	14

Controlling the JES2 Environment

JES2 can be started after the MVS system has been initialized. The MVS system automatically starts JES2 if your installation provides this capability. Otherwise, you must issue the START JES2 (or S JES2) command to invoke a JCL procedure in SYS1.PROCLIB that starts JES2. See *z/OS MVS System Commands* for a complete description of this command.

JES2 initialization is performed after JES2 has been started. Initiators will not accept work (process jobs) until JES2 initialization is complete. This section presents detailed information about the JES2 start processes and describes commands you can use to stop JES2, withdraw it from the system, specify exit point characteristics, and monitor buffers.

Specifying the Start Options

When JES2 is started, it uses the start options specified to determine how it will perform the current initialization. The start options described in this section are defined by JES2. However, you can define other start options for your installation by using the scanning facility (a $SCAN table is provided for initialization options) or an Exit 0 routine for this purpose. (Refer to *z/OS JES2 Installation Exits* for further information on these procedures.) Unless these options are specified in the JCL procedure used for automatic starting of JES2, you must specify the start options from the console.

Starting Using a JCL Procedure

When the options are specified on the JCL procedure (on the EXEC statement) or by specifying the PARM= parameter on the MVS START command, JES2 suppresses the $HASP426 (SPECIFY OPTIONS) message and completes initialization without operator intervention unless CONSOLE control statements have been added to the JES2 initialization data set or an initialization statement is in error. *z/OS MVS JCL Reference* gives these rules using the MVS START command. These rules govern the use of the PARM= parameter on the EXEC JCL statement and apply to how you specify JES2 start options with a JCL procedure. The examples below illustrate both correct and incorrect use of these rules in starting JES2.

```
S JES2,PARM=(FORMAT,SPOOL=VALIDATE)   ...  is incorrect.
S JES2,PARM=(FORMAT,'SPOOL=VALIDATE') ...  is correct.
S JES2,PARM='FORMAT,SPOOL=VALIDATE'   ...  is correct.
S JES2,PARM=(FORMAT,SPOOL='VALIDATE') ...  is incorrect.
```

Once the options are specified (from the JCL procedure or on the MVS START command), JES2 does some initial verification, then issues the $HASP493 message indicating that initialization has started. After it has accepted the options, JES2 reads the specified initialization data set. Message $HASP492 indicates that initialization is complete. JES2 is then ready to start processing jobs. If the NOREQ options was specified, JES2 automatically starts processing. Otherwise, you will receive the following messages:

```
$HASP400 ENTER REQUESTS
```

This message requests the operator to use the $S command to start JES2 processing. JES2 issues the $HASP492 message to indicate whether initialization was performed for all members of the MAS configuration or only for the member indicated by **memname** (the member name). $HASP492 also indicates the type of start performed to start member activity.

Starting Using the Console

If the PARM= parameter is not specified on the MVS START command for JES2 then you are choosing to start JES2 by specifying options from the console. JES2 issues message $HASP426:

```
*id $HASP426 SPECIFY OPTIONS - JES jeslevel SSNAME=ssname
```

You should respond using the MVS REPLY command to specify the JES2 options determined by your installation procedures. (See *z/OS MVS System Commands* for a complete description of the REPLY command.)

```
REPLY id,options
```

For example, if the id for a reply is ″003″, the $HASP426 message is:

```
003 $HASP426 SPECIFY OPTIONS..... message
```

You would reply as follows:

```
REPLY 003,options...........
```

Notes:

1. You only are allowed one line on the operator console to provide the JES2 options in your reply.
2. The reply to supply options must follow the rules for JES2 initialization statements.

The examples below illustrate correct responses:

```
REPLY 003,a,b,c,d,e
REPLY 003,'a,b,c,d,e'
REPLY 003,a,b,x=144,d,e
```

The option table that follows, Table 7, lists the JES2 start options and an explanation of each. If you respond to message $HASP426 with the $PJES2 command, JES2 will terminate.

If this is the first start of JES2, then the following sequence applies:

1. You should specify the COLD (or FORMAT) option. If COLD (or FORMAT) is not specified, JES2 issues the following messages:

   ```
   $HASP479 UNABLE TO OBTAIN CKPT DATA SET LOCK - I/O ERROR
   $HASP454 SHOULD JES2 BYPASS THE MULTI-MEMBER INTEGRITY LOCK?
            (Y OR N)
   ```

   Reply Y to message $HASP454; JES2 will then issue:

   ```
   $HASP478 INITIAL CHECKPOINT READ IS FROM CKPTn
            (dsname ON volser)
   $HASP434 INVALID CHECKPOINT RECORD ON CKPTn DATASET
   $HASP285 JES2 CHECKPOINT RECONFIGURATION IN PROGRESS
   $HASP289 CKPT1 AND/OR CKPT2 SPECIFICATIONS ARE REQUIRED.
   $HASP272 ENTER RESPONSE
   ```

   Reply TERM to the $HASP289/$HASP272 message pair. You will then have to restart JES2 specifying the COLD (or FORMAT) option.
2. All options may be entered in uppercase or lowercase and must be separated by commas.
3. If two options are entered that are considered opposite, for example (WARM,COLD), the last option specified is the one JES uses.
4. If FORMAT is specified, the system will perform a cold start even though WARM is also specified.

The operator then enters the options using the standard reply format.

JES2 must be started and completely initialized before initiators will accept work.

Table 7. JES2 Start Options

Option	Explanation
FORMAT **NOFMT**	FORMAT specifies that JES2 is to format all existing spool volumes. If you add unformatted spool volumes, JES2 automatically formats them whether FORMAT is specified or not. When you specify FORMAT, JES2 will automatically be cold started. **Note:** The FORMAT option is denied if this is a multi-access spool configuration, and JES2 is processing in one or more of the other members. ***Default***: NOFMT specifies that JES2 is not to format existing spool volumes unless JES2 determines that formatting is required.
COLD **WARM**	COLD specifies that JES2 is to be cold started. All jobs in the member are lost. **Notes:** 1. The COLD option is denied if this is a multi-access spool configuration and JES2 is processing in one or more of the other members. 2. If the member to be warm started is in a multi-access spool configuration with any other active members, only this member is warm started. 3. When JES2 is cold started, it will be default start with z2 functions activated unless the UNACT parameter is also specified. ***Default***: WARM specifies that JES2 is to be warm started. JES2 will continue processing jobs from where they were stopped. If the FORMAT option was also coded, then JES2 will ignore the WARM specification and will cold start.
NOREQ **REQ**	NOREQ specifies that the $HASP400 (ENTER REQUESTS) message is to be suppressed and that JES2 is to automatically start processing when initialization is complete. ***Default***: REQ specifies that the $HASP400 (ENTER REQUESTS) message is to be written at the console. This message allows the operator to restore the MVS environment (VTAM, for example) to what it was before the preceding shutdown and start JES2 processing with the $S command. This can be overridden with OPTSDEF.
NOLIST **LIST**	NOLIST specifies that JES2 is not to print the contents of the initialization data set or any error flags that occur during initialization. If you specify NOLIST, JES2 ignores any LIST control statements in the initialization data set. The *z/OS JES2 Initialization and Tuning Reference* presents an example of an initialization data set listing produced by using the list option. ***Default***: LIST specifies that JES2 is to print all the statements in the initialization data set and any error flags that occur during initialization. (JES2 prints these statements if a printer is defined for that purpose when JES2 is started.) LIST will not print any statements that follow a NOLIST control statement in the initialization data set. This can be overridden with OPTSDEF.

Table 7. JES2 Start Options (continued)

Option	Explanation
NOLOG **LOG**	NOLOG specifies that JES2 is not to copy initialization statements or initialization errors to the HARDCPY console. If you specify NOLOG, JES2 ignores LOG control statements in the initialization data set. ***Default***: LOG specifies that JES2 is to honor any LOG statements in the initialization data set. This can be overridden with OPTSDEF.
SPOOL=VALIDATE SPOOL=**NOVALIDATE**	VALIDATE specifies that the track group map is validated on a JES2 all-member warm start. This option when used in conjunction with job queue validation is useful for several special situations that require immediate track group map validation. Refer to the*z/OS JES2 Initialization and Tuning Guide* for a further discussion of using SPOOL=VALIDATE. ***Default***: SPOOL=NOVALIDATE specifies that the track group map is not validated when JES2 restarts (single-member and all-member warm start and hot start).
CKPT1 CKPT2	CKPT1 specifies that JES2 reads the CKPT1 data set as the source of the checkpoint data for building the JES2 work queues.CKPT2 specifies that JES2 reads the CKPT2 data set as the source of checkpoint data for building the JES2 work queues. **Note:** This option is valid only on an all-member warm start. ***Default***: If you do not specify this option, JES2 determines which checkpoint data set to initially read based on information in the checkpoint data set. This can be overridden with OPTSDEF or CKPTDEF.
RECONFIG	RECONFIG specifies that JES2 will use the checkpoint data set definitions as specified on the CKPTDEF statement in the initialization data set. JES2 overrides any modifications to the checkpoint data set definitions previously made either by the $T CKPTDEF command or through the use of the checkpoint reconfiguration dialog. Specifying RECONFIG will also cause JES2 to enter the reconfiguration dialog during initialization; and issue message $HASP289 CKPT1 AND/OR CKPT2 SPECIFICATIONS ARE REQUIRED. **The CKPTDEF statement definition cannot contain the most current checkpoint definition if you have previously reconfigured your checkpoint configuration through the checkpoint reconfiguration dialog because changes made through the dialog are not saved in the input stream data set.** **Notes:** 1. This option is valid only on an all-member warm start. 2. Specifying PARM=RECONFIG has the same affect as specifying RECONFIG=YES on the CKPTDEF initialization statement.

Table 7. JES2 Start Options (continued)

Option	Explanation
HASPPARM=ddname HASPPARM=**HASPPARM**	HASPPARM=ddname specifies the name of the data definition (DD) statement that defines the data set containing the initialization statements that JES2 is to use for this initialization. ***Default***:HASPPARM=**HASPPARM** specifies that JES2 is to be initialized using the initialization statements in the data set defined by the HASPPARM DD statement in the JES2 procedure. Mutually exclusive with MEMBER=.
MEMBER=membname or PARMLIB_MEMBER=membname MEMBER=**HASjesx**	MEMBER=membname specifies the member of the default PARMLIB concatination containing the initialization statments that JES2 is to use for this initialization. PARMLIB_MEMBER= is a synonym for MEMBER=. MEMBER is mutually exclusive with HASPPARM=. The order of processing is: 1. MEMBER= if specified 2. HASPPARM= if specified 3. default HASPPARM=HASPPARM if DD can be opened 4. default MEMBER=HASjesx member of the default PARMLIB concatination
CONSOLE	Causes JES2 to simulate receiving a CONSOLE initialization statement after all initialization statements are processed. That is, if CONSOLE is specified, JES2 will divert to the operator console for further parameter input after all PARMLIB parameter input is exhausted. (Refer to the CONSOLE initialization control statement, above, for further information.) This can be overridden with OPTSDEF.
NONE U N	NONE, U, or N character specifies that JES2 is to use all the default start options. There is no difference between these three options. These options are equivalent. When NONE, U, Or N is specifie, JES2 uses the default start options which are: • NOFMT • WARM • REQ • LIST • LOG
$P JES2	If specified, instructs JES2 to terminate immediately.
UNACT	Unactivates the new JES2 functions introduced in Release z/OS 1.2. This parameter unactivatess an ACTIVATE level=z2. This option can be used on an all-member HOT start or COLD start.

Displaying Status of JES2

Once JES2 has been started, you can display the status of the JES2 subsystem using the MVS DISPLAY command. For a description of the DISPLAY command, see *z/OS MVS System Commands*.

JES2 status information is also maintained by a JES2 monitor address space. The $JD STATUS command can be used to display any problems JES2 may be experiencing.

Restarting JES2

JES2 may be either cold started or warm started, depending on the current environment. You can specify the type of start (COLD or WARM) on the MVS START command, or in response to the $HASP426 SPECIFY OPTIONS message. (See "Specifying the Start Options" on page 6 for information about how to specify JES2 options.) Specifying WARM can result in a hot start or quick start, as described below and summarized in Table 8 on page 12.

Cold Start

If you want to specify the COLD and/or FORMAT initialization options (both of which result in a cold start of JES2), you must IPL the system before you issue the MVS START command, unless you stopped the previous JES2 with a $P JES2 operator command. Implement a cold start with caution because it results in the re-initialization of all JES2 job and output queues. This means all job queue entries and job output elements are cleared and formatted.

If you specify the FORMAT initialization option, JES2 formats all existing spool volumes. Otherwise, JES2 formats any spool volumes it determines are unformatted. No other member in a MAS configuration can be active during a cold start or JES2 will terminate with an error message.

You invoke one of the remaining initialization processes as a result of specifying the WARM initialization option without the FORMAT option. If you specify the FORMAT option, JES2 automatically performs a cold start.

Warm Start

The warm start initialization process applies to:

- Single member
- All members in a MAS configuration.

When you use the warm start initialization process to start a single member the warm start is referred to as a **single-member** warm start. During a single-member warm start, JES2 only re-queues jobs that were previously active on the member.

A single-member warm start occurs if *all* of the following is true:

- This member abnormally terminated.
- This member is not the first member in the MAS configuration to be started.
- You IPL the system before issuing the MVS START command for JES2.

When you start the first member in a MAS configuration that is being initialized after an IPL or clean shutdown of JES2 ($P JES2), the warm start is referred to as an **all-member** warm start.

An all-member warm start applies to every member of the MAS configuration. Because no other member is currently using the checkpoint data set, this is the only

time that activities such as verifying internal control blocks for all jobs in the MAS configuration may occur. All jobs that were previously active on any processor are re-queued to their respective queues.

Hot Start: A hot start is a warm start of an abnormally terminated JES2 member without an intervening IPL. JES2 performs a hot start when a particular JES2 member has stopped but other systems have continued to function and have not experienced problems. When JES2 hot starts, all address spaces continue to execute as if JES2 had never terminated. Jobs that were processing on output devices are re-queued as if a $I command had been issued. Jobs on input devices must be resubmitted and lines must be restarted. Hot starts have no affect on other members in a MAS configuration.

Quick Start: A quick start occurs if you request a warm start and JES2 determines that job queue and job output table updating is not necessary. This can occur in these cases:

- The previous JES2 was stopped by a $P JES2 command and this is not the first member (or only member) in the MAS configuration to start. Because all work is quiesced, there is no need to update the job queue or job output table before restarting.
- An all-member warm start has been performed (which processes all jobs) and this member is already defined to the MAS configuration. There is no need to update the job queues or job output table.
- This member abnormally terminated and a $E MEMBER(member) command was issued from another member in the MAS configuration. This gives the issuing member the ability to:
  - Process any jobs that had a specific affinity for the member being reset.
  - Process any output for the reset member.
  - Restart any jobs that were interrupted on the reset member.
  - Dynamically add a new member to a multi-access spool configuration. A new member is defined as a member that has a NAME (on the MEMBER statement) that has not been previously defined to the MAS.

$E MEMBER Command Start: In addition to the above method of restarting JES2, a restart of work on the failed member can be performed on any other active member in the configuration by the AUTOEMEM facility or by entering the $E MEMBER command. In-process work on the specified member is recovered and made available for selection by other members of the configuration, subject to affinity for execution restart.

The following table summarizes the type of start performed in a given environment and situation when you request a warm start. In the table, “JES2 Terminates Normally” infers that the operator enters a $P JES2 command; “JES2 Terminates Abnormally” infers that the operator enters a $P JES2,ABEND[,FORCE] command or JES2 terminates abnormally.

Table 8. Types of JES2 Warm Start

Environment:	**JES2 Terminates:**			
	Normally with IPL	**Normally without IPL**	**Abnormally with IPL**	**Abnormally without IPL**
First member starting (single member or MAS complex)	All-member warm start	All-member warm start	All-member warm start	Hot start

Table 8. Types of JES2 Warm Start (continued)

Another member joining an already-running MAS complex	Quick start	Quick start	Single-member warm start **	Hot start *

** Assuming no $E MEMBER from another member. If $E MEMBER was issued, a hot start will be denied ($HASP490) and an IPL is required.*

*** Assuming no $E MEMBER from another member (or AUTOEMEM option) from another member. If $E MEMBER was issued, a quick start results.*

Warm Start Processing Considerations

You must consider the following when performing a JES2 warm start:

Spool volumes

No new spool volumes can be added during a warm start of JES2; they must be added with the start spool ($S SPOOL) command. A volume may be removed using the drain spool ($P SPOOL) or halt spool ($Z SPOOL) operator command.

Console printers defined for output only

During a re-initialization without an IPL, you must issue the MVS VARY command (V SYSLOG, HARDCPY) if you have defined any console printers for output only in &SYS1.&PARMLIB.

Reestablishing the previous environment

It is recommended that you specify the REQ initialization option when performing a warm start. This option gives you the chance to reestablish the processing environment that existed before JES2 terminated (by restoring the VTAM environment, restoring the TCAS environment, and/or modifying the MVS environment) before starting JES2 processing.

Job status

Any jobs being read into the system when it failed must be resubmitted by the originator of the job. Those jobs awaiting execution, and completed jobs awaiting output processing, are unaffected by the system failure. Jobs active on printers or punches are returned to the hardcopy queue, and will start at the latest checkpoint when selected.

JES2 examines jobs interrupted during execution to determine which are eligible for restart. (For a discussion of job restart eligibility, see *z/OS JES2 Initialization and Tuning Reference*.) The following message is displayed for each eligible job:

```
*id IEF225D SHOULD jobname.stepname.procedure [ checkid ] RESTART
```

If you reply:

YES

The job is restarted.

NO

The job is queued for output or queued for re-execution (if the RESTART option was specified on the job's /*JOBPARM statement).

HOLD

The job is placed in hold status, to be restarted when it is released.

Once you have determined that the system is ready to resume processing, enter the $S command (unless NOREQ was specified).

Stopping JES2

Before stopping JES2, issue the $P command to stop all JES2 processing. System initiators, printers, punches, job transmitters, and SYSOUT transmitters will not accept any new work and will become inactive after completing their current activity. However, new jobs will be accepted through input devices; JES2 issues message $HASP099 ALL AVAILABLE FUNCTIONS COMPLETE when JES2 has stopped processing.

Withdrawing JES2 from the System

Once JES2 processing is complete, you can issue the $P JES2 command to withdraw JES2 from the system to which the entering console is attached. Specifying $P JES2 also turns off event tracing with essentially the same results as specifying $T TRACEDEF,ACTIVE=NO. You can later return JES2 to the system by issuing the MVS START command, which invokes a procedure in SYS1.PROCLIB that contains the JCL necessary to start JES2. If any jobs are being processed or any devices active, the $P JES2 command is processed as a $P command (which can be restarted by $S) and drains JES2 work from the system.

If it is not possible or reasonable to drain the JES2 member (for example, due to large numbers of lines, jobs, and remotes; or, if you plan to restart JES2 using a hot start) you can specify $P JES2,ABEND. The ABEND parameter forces JES2 termination regardless of any JES2 or system activity. If the checkpoint resides on a coupling facility structure and the member is processing a write request, JES2 issues the $HASP552 message and delays the $P command until the checkpoint write has completed. Before issuing the $P JES2,ABEND command, you may wish to display current activity using the $D A or $D U commands.

If the $P JES2,ABEND command does not successfully terminate JES2, you can also specify the FORCE parameter. The $PJES2,ABEND,FORCE command results in a call to the recovery termination manager (RTM) to terminate the JES2 address space. Because the FORCE parameter can cause unpredictable results, always attempt to enter the $P JES2,ABEND command first. If you enter the $P JES2,ABEND,FORCE command before entering $P JES2,ABEND, JES2 issues the $HASP553 message and ignores the entire command.

To withdraw JES2 from a system involved in cross-system activity, you can issue the $P JES2, QUICK command. Cross-system activity occurs when a user on one JES2 subsystem requests a cross-system function from another JES2 subsystem within the same poly-JES2 environment (An MVS system in which more than one JES2 is running concurrently). This option deletes the control blocks for the request submitted by the user who requested cross-system function. Before using the QUICK keyword on the $P JES2 command, you should send a message to the user asking them to end their cross-system activity.

After the $P JES2 command completes processing,issue the HALT EOD command if you are planning to turn the system over for software or hardware maintenance. Issuing the HALT EOD command ensures that important statistics and data records in storage are not permanently lost. Refer to *z/OS MVS System Commands* for further information regarding system action.

Specifying JES2 Exit Point Characteristics

JES2 allows the system programmer to add functions or modify processing by writing exits to be executed at certain points during JES2 processing. You can use the $T EXIT(nnn) command to control the invocation and tracing of JES2

installation exit points. (The nnn subscript defines the exit points affected by this command.) The STATUS parameter specifies whether the exit points are enabled or disabled. The TRACE parameter specifies whether the exit points are traced.

Monitoring Buffers

All JES2 buffers are maintained in a dynamic pool until required by an active function. The BUFDEF initialization statement defines the number of local I/O buffers to be acquired by JES2 (10 to 2000). To help you tune your system, you may wish to closely monitor local buffer usage during JES2 processing by issuing the $T BUFDEF command. (For performance considerations associated with buffer usage, see *z/OS JES2 Initialization and Tuning Reference*.)

Use the $T BUFDEF command to specify the percentage of local buffers used at which JES2 alerts you of a local buffer shortage. The $HASP840 message displays the number of local buffers in use, the number currently free, and the percentage of usage at which you are alerted.

Use the $T SMFDEF command to monitor SMF buffers in the same manner. The $HASP841 message displays the current values of all the parameters on the SMFDEF initialization statement when you enter the $T SMFDEF command. The $HASP050 message alerts you of a shortage of either SMF buffers or local buffers. JES2 deletes this message when the resource shortage is relieved (by a decrease in resource use or an increase in the threshold).

Controlling Your MAS Environment

JES2 provides commands you can use to control your multi-access spool configuration. You can place a member in independent mode to process jobs separately from other members. Displaying the status and settings of members in the MAS configuration enables you to change specifications to modify job execution.

You can specify the processing characteristics of MAS members and control the JES2 checkpointing mechanism, which enables you to restart or duplicate processing. JES2 allows you to reset the checkpoint lock if a member in the MAS configuration should fail while holding the lock. Additionally, you can make the failed member's jobs eligible for restart on other members.

This section describes the commands you use to perform these functions to control your MAS environment.

Using Independent Mode Processing

During processing, your installation may want to test a new system or make modifications to an existing system without disrupting the other processors or their workloads. The $T MEMBER(memname),IND= command allows you to change the operational mode of the system on which the command is entered. Specifically, you may set a member within a MAS configuration to independent mode so that it may operate independently of the configuration.

A processor designated as operating in independent mode processes only jobs that are routed to it and designated to execute on a processor in independent mode. Non-independent mode jobs that try to execute on that processor can not do so until the processor is taken out of independent mode. The spool volumes are still shared with other processors in the MAS configuration.

Displaying Status and Settings of the MAS

In order to control your MAS environment, you must know its present status and settings. You can issue the $D MASDEF command to display the characteristics of the MAS configuration. The $HASP843 message displays information including the time limits on maintaining control of the checkpoint data set, and whether a member can reset the checkpoint data set automatically.

The $D MASDEF command also provides a means of determining what member owns the checkpoint data set lock, and if a member is actively updating the checkpoint data set. The RSVHELD parameter displays the member that has access to the checkpoint data set, but is not actively updating the data set; the QUESHELD parameter displays the member that has access to the checkpoint data set, and is actively updating the data set.

Use the $D MEMBER command to list the status of the members in the MAS configuration. The $HASP673 message displays information including the member name, the MVS system name, and the status of each member.

You can use the $D command at any time during processing to display the current settings of JES2 initialization statement parameters. If you specify only the statement name, JES2 will display all of the parameters defined on that statement. If you want to display only certain parameters, you must specify the statement name followed by the parameters requested, separated by commas. Because the $D command allows you to examine the controls in effect, it is recommended that you use this command before making any modifications with the $T command.

You can route the output of certain $D commands to an alternate area and/or console. The $ADD REDIRECT command allows you to specify on which consoles such output can be displayed. For a list of the supported parameters for this command, see the description of the $ADD REDIRECT command. The $D REDIRECT command allows you to display the redirection that is already in effect on the member. For a list of the supported parameters for this command, see the description of the $D REDIRECT command. You can alter the REDIRECT initialization statement and specify different consoles for output by issuing the $T REDIRECT command. For a list of the supported parameters for this command, see the description of the $T REDIRECT command. *z/OS JES2 Initialization and Tuning Reference* contains a complete description of the REDIRECT initialization statement.

Using JES2 and MVS Commands Together

Use the JES2 $VS command to enter MVS system commands as automatic commands or in a job stream.

The MVS D (DISPLAY) R command is a JES2-associated command you may issue from the operator console to display a list of JES2 operator requests that have not yet been fulfilled. It specifies that JES2 is to display the text of any message awaiting reply if the message identifier begins with $HASP where $ is the defined console character. To display messages awaiting a reply, enter the following:

```
D R,,MSG=$HASP
```

Note that if the installation changes the console character (as defined on CONDEF CONCHAR), that value must be used instead. See *z/OS MVS System Commands* for a description of other operands you may specify on this command.

You can use the MVS ROUTE command to send a JES2 command to one or more systems in a sysplex. Use the ROUTE command, for example, to change initialization definitions, to control JES2 installation exit points ($T EXIT) or to define a VTAM application to JES2 ($ADD APPL). To route a JES2 command (such as $ADD APPL) to all systems in a sysplex, enter the following:

```
ROUTE *ALL,$ADD APPL
```

In some cases, however, you should not route commands to more than one system. For example, you would not route a command

- If the routed command results in a WTOR.
- If the routed command displays an excessive amount of data.

For more information about the ROUTE command, see *z/OS MVS System Commands* .

Using the MVS ROUTE *ALL to Expand the Scope of a Command

Some commands display information or affect the entire MAS, while others display information or affect only the member where the command is issued.

You might want to expand the scope of a command that affects only that single member to all members of the MAS. If so, you can use the MVS ROUTE *ALL command to issue a command to all active members of the MAS.

However, to use the ROUTE *ALL command to send a command to all members of the MAS, each member of the MAS must have the same console character. See the CONCHAR parameter on the CONDEF initialization statement or the $T CONDEF command for information about setting the console character.

Each command includes a description of the scope of that command.

Changing Settings of the MAS

During execution it is sometimes necessary or desirable to change certain JES2 specifications. For example, you may want to redefine processing characteristics to favor a different workload from the current one. Also, when the MAS configuration grows, the associated values must be changed as well.

Use the $T command to define and change most initialization statement parameters. The new specifications take effect when jobs enter their next phase of JES2 processing. These modifications are not checkpointed, however, and are not carried across a restart of JES2 (that is, &SYS1.&PARMLIB. is not updated).

This section describes the $T commands associated with the general JES2 processing environment. Chapters 2, 3, and 4 describe initialization statements associated with devices, jobs, and networks, respectively.

Controlling the Checkpoint Definition

The JES2 checkpointing mechanism preserves processing information during a program's operation to allow that processing to be restarted or duplicated. Your checkpoint configuration can be set up in either of two modes: DUPLEX or DUAL.

DUPLEX mode processing allows MAS configuration members to maintain a primary checkpoint data set (CKPT1) and, optionally, a backup checkpoint data set (CKPT2). DUAL mode processing uses the same two checkpoint data sets in a "flip-flop" scheme designed to aid system performance. DUAL mode processing is recommended for installations with high checkpoint data set I/O.

If one or both checkpoint data sets at your installation reside on a coupling facility structure instead of on DASD, you cannot use DUAL mode; JES2 processing forces the mode to DUPLEX. For a more detailed discussion of both DUPLEX and DUAL mode processing, refer to *z/OS JES2 Initialization and Tuning Guide*.

Specifying MAS definition parameters and Initiating a Checkpoint Reconfiguration Dialog: You control the use of the checkpoint data set by specifying parameters on the $T MASDEF and $T CKPTDEF commands. The $T MASDEF command allows you to specify MAS definition and tuning parameters. You can specify the minimum and maximum time a MAS member must wait to regain control of the checkpoint data set, how long that member can have control, and at what time interval JES2 determines that a lockout condition exists. You can also specify whether direct access volumes should be marked "shared" or "non-shared", and at what time interval JES2 assumes that a MAS member is inoperative.

You can use the $T CKPTDEF command to specify the checkpoint definition and to initiate a checkpoint reconfiguration dialog with JES2. Specify ON or OFF on the DUPLEX parameter to tell JES2 whether or not CKPT2 is used as a backup of the CKPT1 data set. You may specify that alternate data sets be used in place of the CKPT1 and CKPT2 data sets. The RECONFIG=Y parameter puts JES2 in a dialog so that you can supply the information necessary to reconfigure the checkpoint data set specifications.

z/OS JES2 Initialization and Tuning Guide provides several examples of JES2- and operator-initiated checkpoint failure and recovery procedures. It is highly recommended that you familiarize yourself with these dialogs and procedures before attempting to reconfigure the checkpoint environment.

Making Jobs Eligible to Restart

When a checkpoint data set resides on a coupling facility structure instead of on a DASD volume, neither the software checkpoint lock nor the hardware lock are set. Therefore, neither lock has to be released. However, the jobs from the failed processor must be requeued for execution on an active member of the MAS.

When a JES2 member of a MAS configuration fails while holding the software checkpoint lock, other members within the configuration cannot access the checkpoint data set. JES2 issues the message:

```
$HASP264 WAITING FOR RELEASE OF JES2 CKPT LOCK BY memname.
```

To make jobs from a failed JES2 member eligible for restart on another member when both the MVS system and the JES2 subsystem fail, the hardware lock (if held) must be reset and the software checkpoint lock must be reset. If the JES2 subsystem fails and the MVS system continues to run jobs, reset the software lock and restart the JES2 subsystem. After resetting both the hardware and the software checkpoint lock, jobs become eligible for restart:

- Through the use of operator commands.
- Through the use of the AUTOEMEM option.

Using Operator Commands: To make jobs eligible for restart without the AUTOEMEM option (when the JES2 checkpoint data set resides on DASD) an operator must:

- Reset the hardware checkpoint lock.
- Enter the **$E CKPTLOCK, HELDBY=** command to reset the software checkpoint lock, if it is held by the failed member.
- Enter the **$E MEMBER(member)** to requeue jobs for restart on another JES2 MAS member.

Note: When a checkpoint resides on a coupling facility structure, you must still enter the **$E MEMBER(member)** to requeue jobs.

Using the AUTOEMEM Option: In a sysplex, JES2 members of a MAS can take advantage of the AUTOEMEM option to make jobs eligible for restart, with minimal operator intervention. The option can be specified on the MASDEF initialization statement (or dynamically through the $T MASDEF command):

- AUTOEMEM=YES
- RESTART=YES|NO

For a more complete understanding of the AUTOEMEM option, see *z/OS JES2 Initialization and Tuning Guide*.

Controlling Automatic Command Processing

You can specify, from the console or through a local reader, that certain commands or strings of commands take effect automatically at specific times or at regular intervals. Automatic command processing can be used to provide status displays and to lessen your work for common, preset routines or schedules.

You use the $T A command to display, specify, and modify automatic commands. $S A starts automatic command processing; $Z A halts automatic command processing until you wish to restart it; $C A cancels further automatic command processing.

Because automatic commands are executed at system speed, commands may congest the system or messages may flood the console. If this occurs, you can try submitting the commands in a different sequence.

Automatic command processing can also terminate itself prematurely under the following conditions:

- If you enter the $Z A command and then let 24 hours or more elapse without restarting it.
- If the system becomes so congested that the automatic commands are delayed approximately five minutes.
- If you specify a start time for an automatic command that is earlier than the current time, or if your specified start time does not include an hour specification, the command is issued and then cancelled.

For examples and more information about automatic command processing, see *z/OS JES2 Initialization and Tuning Reference*.

Controlling JES2 Diagnostics

This section describes those commands that enable you to trace JES2 processing and diagnose JES2 problems. You can:

- Control JES2 tracing
- Recover from errors
- Debug errors.

Controlling JES2 Tracing

Tracing of JES2 processing is done by activating IBM or installation trace points in the code. Trace points may be put into the code to save register contents and data. Initialize tracing by specifying parameters on the TRACE(n), TRACEDEF, SSI(n), and device initialization statements. Traced data can be accessed in formatted system output and through a dump of unformatted trace tables residing in CSA storage.

Enter the $T TRACEDEF command to start the trace facility. This command allows you to specify the JES2 environment characteristics. The $S TRACE(n) and $P TRACE(n) allow you to activate and deactivate specific trace identifiers, which relate to events to be traced. For a list of the trace identifiers and their associated meanings, see *z/OS JES2 Diagnosis*.

You can trace all processors of a given type using the $T PCE command. This command allows you to start or stop tracing for a particular processor. The $D PCE command displays the tracing status for JES2 processors.

To start or stop tracing for a subsystem interface function, enter the $T SSI(n) command. For more information about the SSI functions that are intended for customer use, and their associated meanings, see *z/OS MVS Using the Subsystem Interface*.

Recovering From Errors

JES2 provides several recovery routines to isolate the effects of JES2 programming errors. A JES2 processor can specify a processor recovery routine to be given control when an error occurs.

Until an installation-specified error rate is reached, recovery is automatically attempted and a dump issued. When the error rate threshold has been reached or exceeded, you are required to authorize the recovery attempt. You can also suppress the dump. The error rate threshold is specified on the RECVOPTS initialization statement.

When an error occurs, JES2 issues the $HASP095 message to describe the error. When the error rate is reached, JES2 issues $HASP070 SPECIFY RECOVERY OPTIONS - (‘RECOVER’ OR ‘TERMINATE’ OR ‘SNAP’, AND, OPTIONALLY, ‘,NODUMP’).

Use the $T RECVopts(type) command to specify the error rate threshold below which automatic SVC dumps are issued and to specify the rate below which you are not involved in the recovery process. The **(type)** parameter specifies the type of recovery for which you will *not* receive the $HASP070 message.

Debugging Errors

The DEBUG facility can be used to trap incorrect alterations of checkpoint data (using DEBUG=Y|N), and it can be used (if additional parameters are included with the command) to record certain JES2 events and activities. For example, you can specify whether to count certain events, provide certain $HASP095 error information to the operator, verify the integrity of a newly created checkpoint version, or, start or stop monitoring updates made to the checkpoint data set. The information collected from the monitoring can be made available through a dump of the JES2 address space.

Note: The CKPT option on the DEBUG facility should not be used in production due to significant performance overhead.

Displaying Module Information

Use the $D MODULE, $D LOADMOD, and $D SSI commands to obtain information about modules, load modules, and subsystem interface functions. This information can be used to determine possible compatibility errors in the levels of code.

Controlling JES2 Spooling

Displaying spool information enables you to monitor JES2 spooling and determine the action to take to control the spool environment. You can use the $D SPOOL command to display the status and utilization of spool volumes. Use the $D JOBQ,SPOOL=(%>NN) to display all the jobs in the configuration that are using a specified amount of spool space.

The SPOOLDEF initialization statement sets the maximum number of spool volumes (1-253) allowed in the MAS configuration. The number you specify is automatically rounded up to a multiple of 32. For example, if you specify SPOOLNUM=33, a maximum of 64 spool volumes is allowed in the MAS configuration. Use the $T SPOOLDEF command to dynamically change some of the JES2 spooling environment characteristics.

You can add (and, optionally, format) a new spool volume dynamically or when performing a cold start by issuing the $S SPOOL command. Additionally, you can use the $S SPOOL command to reactivate a previously inactive volume. Jobs allocate space on the volume only after it has completed start processing. While the volume is starting, other processing within the system continues normally.

You may also drain and delete spool volumes dynamically using the $P SPOOL command as well as halt entire spool volumes using the $Z SPOOL command. Any spooled messages or JESNEWS data sets residing on the volume to be halted or drained are moved to an active spool volume.

Note: If there is no active volume to receive these data sets, the volume to be drained or halted will not complete the draining or halting process.

Spool Addressing Modes

Spool volumes can be referenced using absolute or relative track addresses. The addressing mode is determined at the time the volume is started (or at cold start time). Relative addressing is needed if the spool data set ends beyond track number 65,535. The installation can either request relative addressing be used for

all volumes, only if needed, or never. Use of relative addressing may impact vendor products that access SPOOL directly. For more details see SPOOLDEF initialization statement or $T SPOOLDEF command.

Considerations for Draining a Spool Volume

Issuing the $P SPOOL command allows all work on the spool volume to be processed and prevents any available space from being allocated by new work. You may also cancel and purge all jobs residing on a volume using the CANCEL parameter. If you cancel all work for an inactive volume, JES2 deletes any work remaining on the volume. This could result in lost spool space on other volumes if the jobs on the volume being cancelled have allocated space on other volumes. All other job resources will be recovered. The lost spool space will be recovered upon an all-member warm start if you include SPOOL=VALIDATE as a restart option or automatically within 7 days as provided by the automatic spool reclamation function, whichever occurs first. If the volume can be remounted, you may start it to prevent the loss of spool space by issuing the $S SPOOL,CANCEL,P command.

Controlling Spool Partitioning

JES2 defaults to assigning track groups for jobs evenly across all available spool volumes. If one volume fails, many jobs can be lost. The FENCE parameter on the SPOOLDEF initialization statement and the $T SPOOLDEF command control spool partitioning. When a specific job reaches its fencing limit, additional volumes are assigned only if there are insufficient track groups available on the volumes to which the job is fenced.

Note: If you change the FENCE specification, the new specification is checkpointed and carried across a restart of JES2 unless you perform a cold start. The FENCE specification can only be changed on a cold start or via a $T SPOOLDEF command.

Spool Volume States

The following are possible states of a spool volume:

ACTIVE
The spool volume is in use. Allocation and deallocation of spool space is permitted. The volume is allocated to all members in the MAS configuration.

STARTING
The spool volume is not yet ACTIVE. It is in the process of MVS dynamic allocation or formatting. During this time, the volume is being dynamically allocated to each member in the MAS configuration. Allocation or deallocation of spool space is not permitted.

DRAINING
Jobs residing on the volume are selectable. Allocation of new spool space is not permitted. The volume must be completely empty before the drain process can complete. When the volume is completely empty, the volume will be dynamically unallocated on all members in the MAS configuration. The spool volume then becomes DRAINED.

DRAINED
The spool volume is empty and unallocated, that is, no allocated spool space remains on the volume, and the volume is unallocated on all members in the MAS configuration. The volume is considered nonexistent and can not be displayed by JES2.

HALTING

The spool volume stops allocation of spool space and does not select new work. Currently active work (that is, executing, printing, punching, etc.) is allowed to complete the current phase of processing. When all currently active work that has space allocated on the volume completes, the volume will be dynamically unallocated on all members in the MAS configuration. The spool volume then becomes INACTIVE.

INACTIVE

The spool volume may contain allocated spool space but does not permit further allocation or the processing of currently allocated spool space. The volume has been unallocated on all members in the MAS configuration and may be removed by the operator.

The following table summarizes the characteristics of the six status classifications of spool volumes:

STATUS	IN USE	ALLOCATABLE	SELECTABLE
STARTING	NO	NO	NO
ACTIVE	YES	YES	YES
DRAINING	YES	NO	YES
DRAINED	NO	NO	NO
HALTING	YES	NO	NO
INACTIVE	NO	NO	NO

- IN USE - Active jobs may be using spool space on the volume.
- ALLOCATABLE - Spool space may be allocated on the volume.
- SELECTABLE - Jobs that have spool space on the volume may be selected for JES2 processing.

When an inactive volume isn't available to be started again (for example, the volume may be damaged and cannot be remounted) and the loss of spool space is acceptable, you should cancel all jobs residing on the volume and subsequently drain the volume. Because jobs associated with this volume may also have spool space allocated on other volumes, spool space on other spool volumes may be lost with all currently defined spool volumes active (excluding spool volumes that have been drained). JES2 recovers these lost track groups at the next all-member warm start if you also specify the SPOOL=VALIDATE start option or automatically within 7 days as provided by the automatic spool reclamation function, whichever occurs first. Other JES2 resources, such as job queue elements and job output elements, will be recovered.

For more information on recovering from a JES2 spool failure see "Recovering from Spool Volume Failure" in *z/OS JES2 Initialization and Tuning Guide*.

Chapter 2. Controlling JES2 Devices and Functional Subsystems

This chapter describes how to control:
- The device environment by:
  - Controlling console communication characteristics
  - Displaying device status
  - Controlling functional subsystems
- Local and remote readers
- Local and remote printers and punches
- The remote job entry environment
- Spool offload devices.

The following tables list the tasks discussed in this chapter and provide a cross reference to the detailed descriptions of the corresponding commands.

Table 9. Controlling the Device Environment

Task	Command	Location
Control console communication characteristics	$T CONDEF	"$T CONDEF - Set Console Communication Characteristics" on page 613
Display the status of all JES2 devices	$D U	"$D U - Display the Status of JES2-Controlled Devices" on page 434
Define a new functional subsystem to JES2	$ADD FSS	"$ADD FSS - Define a Functional Subsystem" on page 123
Change a functional subsystem's characteristics	$T FSS	"$T FSS - Control a Functional Subsystem" on page 642

Table 10. Controlling Readers

Task	Command	Location
Assign reader characteristics, hold all jobs, and control tracing	$T RDRnn Rnnnn.RDm	"$T RDRnn and $T Rnnnn.RDm - Control a Reader" on page 806
Start a reader	$S RDRnn Rnnnn.RDm	"$S RDRnn and $Rnnnn.RDm - Start a Reader" on page 586

© Copyright IBM Corp. 1988, 2002

Table 10. Controlling Readers (continued)

Task	Command	Location
Display a reader	$D RDRnn Rnnnn.RDm	"$D RDR(nn) and $D R(nn).RD(mm) - Display Command Authority for a Reader" on page 402
Cancel reader activity	$C RDRnn Rnnnn.RDm	"$C RDR and $C Rnnnn.RDm - Cancel Reader Activity" on page 186
Halt a reader	$Z RDRnn	"$Z RDRnn - Halt Reader Activity" on page 856
Stop a reader	$P RDRnn Rnnnn.RDm	"$P RDRnn and $P Rnnnn.RDm - Stop a Reader" on page 547
Control internal readers	$T INTRDR	"$T INTRDR - Control Internal Readers" on page 647

Table 11. Controlling Printers

Task	Command	Location
Specify printer characteristics and options	$T PRTnnnn Rnnnn.PRm	"$T PRTnnnn and $T Rnnnn.PRm - Control a Printer" on page 775
Specify JES2 printer characteristics	$T PRINTDEF	"$T PRINTDEF - Control the JES2 Print Environment" on page 769
Start a printer	$S PRTnnnn Rnnnn.PRm	"$S PRTnnnn and $S Rnnnn.PRm - Start a Printer" on page 582
Define a local printer	$ADD PRTnnnn	"$ADD PRT - Define a Local Printer" on page 135
Display printers	$D PRT Rnnnn.PRTm	"$D PRTnnnn and $D R(nnnn).PR(m) - Display Printers" on page 376
Interrupt printer activity	$I PRTnnnn Rnnnn.PRm	"$I PRTnnnn and $I Rnnnn.PRm - Interrupt Printer Activity" on page 505

Table 11. Controlling Printers (continued)

Task	Command	Location
Advance printer output	$F PRTnnnn Rnnnn.PRm	"$F PRTnnnn and $F Rnnnn.PRm - Logically Advance Printer Output" on page 465
Backspace printer output	$B PRTnnnn Rnnnn.PRm	"$B PRTnnnn and $B Rnnnn.PRm - Logically Backspace Printer Output" on page 161
Repeat printer output	$N PRTnnnn Rnnnn.PRm	"$T PRTnnnn and $T Rnnnn.PRm - Control a Printer" on page 775
Restart printer activity	$E PRTnnnn Rnnnn.PRm	"$E PRTnnnn and $E Rnnnn.PRm - Restart Printer Activity" on page 463
Cancel printer output	$C PRTnnnn Rnnnn.PRm	"$C PRTnnnn and $C Rnnnn.PRm - Cancel Printer Output" on page 184
Halt printer activity	$Z PRTnnnn Rnnnn.PRm	"$Z PRTnnnn and $Z Rnnnn.PRm - Halt Printer Activity" on page 854
Stop a printer	$P PRTnnnn Rnnnn.PRm	"$P PRTnnnn and $P Rnnnn.PRm - Stop a Printer" on page 544

Table 12. Controlling Punches

Task	Command	Location
Specify punch characteristics and options	$T PUNnn Rnnnn.PUm	"$T PUNnn and $T Rnnnn.PUm - Control a Punch" on page 795
Start a punch	$S PUNnn Rnnnn.PUm	"$S PUNnn and $S Rnnnn.PUm - Start a Punch" on page 584
Display punches.	$D PUNnn Rnnnn.PUm	"$D PUN(nn) and $D R(nnnn).PU(m) - Display a Remote Punch" on page 388

Table 12. Controlling Punches (continued)

Task	Command	Location
Interrupt punch activity	$I PUNnn Rnnnn.PUm	"$I PUNnn and $I Rnnnn.PUm - Interrupt Punch Activity" on page 507
Advance punch output	$F PUNnn Rnnnn.PUm	"$F PRTnnnn and $F Rnnnn.PRm - Logically Advance Printer Output" on page 465
Backspace punch output	$B PUNnn Rnnnn.PUm	"$B PUNnn and $B Rnnnn.PUm - Logically Backspace Punch Output" on page 164
Repeat punch output	$N PUNnn Rnnnn.PUm	"$N PUNnn and $N Rnnnn.PUm - Repeat Punch Output" on page 515
Restart punch activity	$E PUNnn Rnnnn.PUm	"$E PUNnn and $E Rnnnn.PUm - Restart Punch Activity" on page 464
Cancel punch output	$C PUNnn Rnnnn.PUm	"$C PUNnn and $C Rnnnn.PUm - Cancel Punch Output" on page 185
Halt punch activity	$Z PUNnn Rnnnn.PUm	"$Z PUNnn and $Z Rnnnn.PUm - Halt Punch Activity" on page 855
Stop a punch	$P PUNnn Rnnnn.PUm	"$P PUNnn and $P Rnnnn.PUm - Stop a Punch" on page 546

Table 13. Controlling the JES2/VTAM Interface

Task	Command	Location
Define the JES2/VTAM interface	$ADD LOGON(n)	"$ADD LOGON (nn) - Add a Logon" on page 130
Start the JES2/VTAM interface	$S LOGON(n)	"$S LOGON - Start the JES2/VTAM Interface" on page 571

Table 13. Controlling the JES2/VTAM Interface (continued)

Task	Command	Location
Stop the JES2/VTAM interface	$P LOGON(n)	"$P LOGON(nn) - Stop the JES2/VTAM Interface" on page 534
Restart the JES2/VTAM interface	$E LOGON(n)	"$E LOGON(nn) - Restart the JES2/VTAM Interface" on page 457
Assign a password to the JES2/VTAM interface and diagnose SNA problems	$T LOGON(n)	"$T LOGON(n) - Control the JES2/VTAM Interface" on page 689

Table 14. Controlling RJE Lines

Task	Command	Location
Define a RJE line	$ADD LINE(nnn)	"$ADD LINE(nnnn) - Add Line" on page 125
Start an RJE line	$S LINE(nnnn)	"$S LINE(nnnn) - Start a Line" on page 569
Stop an RJE line	$P LINE(nnnn)	"$P LINE(nnnn) - Stop a Line" on page 533
Restart RJE line activity	$E LINE(nnnn)	"$E LINE(nnnn) - Restart Line Activity" on page 455
Disconnect an RJE line, assign a password, or diagnose RJE line problems	$T LINE(nnnn)	"$T LINE(nnnn) - Control a Line" on page 682

Table 15. Controlling RJE Workstations

Task	Command	Location
Specify JES2 teleprocessing characteristics	$T TPDEF	"$T TPDEF - Set JES2 Teleprocessing Characteristics" on page 841
Define an RJE workstation	$ADD RMT(nnnn)	"$T RMT(nn) - Change an RJE Workstation" on page 818
Set an RJE workstation's characteristics	$T RMT(nnnn)	"$T RMT(nn) - Change an RJE Workstation" on page 818

Table 15. Controlling RJE Workstations (continued)

Task	Command	Location
Automatically connect an SNA RJE workstation	$S RMT(nnnn)	"$S N - Start Node Communication on a SNA Line" on page 576
Display active RJE workstations in a MAS	$D ACTRMT	"$D ACTRMT - Display Active RJE Workstations in a MAS" on page 193
Disconnect an RJE workstation	$P RMT(nnnn)	"$P RMT(nnnn) - Terminate a Remote Terminal Connection" on page 548

Table 16. Controlling Offload Devices

Task	Command	Location
Start an offload device	$S OFFLOADn, TYPE=	"$S OFFLOADn - Start an Offload Device" on page 580
Cancel a job/output on offload transmitter/ receiver	$C OFFn.JR OFFn.JT OFFn.SR OFFn.ST	"$C OFFn.xx - Cancel a Spool Offload Transmitter/Receiver" on page 182
Halt an offload device	$Z OFFLOADn	"$Z OFFLOADn - Halt Offload Activity" on page 853
Drain an offload device	$P OFFLOADn	"$P OFFLOADn - Stop an Offload Device" on page 543
Restart an offload transmitter	$E OFFn.JT OFFn.ST	"$E OFFn.xx - Restart a Spool Offload Transmitter" on page 462
Specify offload device characteristics	$T OFFLOAD(n)	"$T OFFLOAD(n) - Set Offload Device Characteristics" on page 752
Start an offload transmitter and/or receiver	$S OFFn.JR OFFn.JT OFFn.SR OFFn.ST	"$S OFFn.xxn - Start Offload Transmitters and Receivers" on page 578
Drain an offload transmitter and/or receiver	$P OFFn.JR OFFn.JT OFFn.SR OFFn.ST	"$P OFFn.xx - Stop an Offload Transmitter/Receiver" on page 541
Specify offload job receiver characteristics	$T OFF(n).JR	"$T OFF(nn).JR - Set Offload Job Receiver Characteristics" on page 722

Table 16. Controlling Offload Devices (continued)

Task	Command	Location
Specify offload job transmitter characteristics	$T OFF(n).JT	"$T OFF(nn).JT - Set Offload Job Transmitter Characteristics" on page 728
Specify offload SYSOUT receiver characteristics	$T OFF(n).SR	"$T OFF(n).SR - Set Offload SYSOUT Receiver Characteristics" on page 735
Specify offload SYSOUT transmitter characteristics	$T OFF(n).ST	"$T OFF(n).ST - Set Offload SYSOUT Transmitter Characteristics" on page 743

Overview of Devices

JES2 is responsible for controlling all system input devices, initiators, and output devices, except those devices controlled by the external writer and programs interfacing with JES2 through an internal reader. The JES2 initiator and device control commands, except the $T command for devices, can be used to control several local and/or remote devices simultaneously. You can specify local input and output devices by either their full or abbreviated names. The device namesand their abbreviations are:

Device Name	Abbreviation	Explanation
LINE(nnnn)	LNE(n)	RJE or NJE line (1-32767)
LOGON(n)	LGN(n)	JES2/VTAM interface
L(n).JR(n)		NJE job receiver
L(n).JT(n)		NJE job transmitter
L(n).SR(n)		NJE SYSOUT receiver
L(n).ST(n)		NJE SYSOUT transmitter
OFFLOAD(n)		Offload device
OFF(n).JR		Offload job receiver
OFFn.JT		Offload job transmitter
OFFn.SR		Offload SYSOUT receiver
OFFn.ST		Offload SYSOUT transmitter
PRINTERnnnn	PRTnnnn	Local printers 1-32767
PUNCHnn	PUNn	Local punches 1-99
RDI		All internal readers 1-32767
READER(nn)	RDR(nn)	Local readers
R(nnnn).CON*		Remote console
R(nnnn).PR(m)*		Remote printers
R(nnnn).PU(m)*		Remote punches
R(nnnn).RD(m)*		Remote readers

All JES2 input devices, initiators, and output devices are in one of several states:

- **Active:** The device or initiator is actively performing a function.
- **Inactive:** The device or initiator is available to perform a function, but no jobs are available.

- **Startable:** A $S command has been issued for the indicated offload transmitter/receiver, but the corresponding offload device has not yet been started.
- **Starting (JES2):** An MVS START command has been issued to activate an initiator, but successful creation of the address space has not been verified. The initiator is not processing work and will not do so until a request is made by MVS started task control to start the initiator job.
- **Starting (device):** A device supported by a functional subsystem (such as a 3800-3 printer) has been started by a $S device command, but successful creation and initialization of the functional subsystem address space has not been verified. The device becomes *active* or *inactive* when functional subsystem initialization is complete.
- **Draining:** The device or initiator is performing a function, but will not begin any new activity upon completion of the current function.
- **Drained:** The device or initiator is inactive and will not become active until you enter a $S command for the device or initiator.
- **Halting:** The initiator is active, but will not select another job after completing the current function.
- **Halted (initiator):** The initiator is inactive and will not become active until you enter a $S command. This differs from drained because the system does not free the resources associated with the initiator.
- **Halted (device):** The device has been halted by a $Z device command or by a requirement for you to perform an action, such as changing the forms, carriage tape, or print train. A $S device command will allow the device to continue.
- **Paused:** The local printer or punch has paused between data set groups. It can be restarted by entering a $S command or by resetting it from a not-ready to a ready state.

Keep the following in mind when entering JES2 device control commands:

- You can enter up to 20 operands in a single JES2 initiator command or device control command.
- Devices generally perform the requested operation after the response to the command.
- Many commands will accept operands as valid, even though the devices are unable to perform the requested function.
- If you enter an incorrect operand on a device command other than a $T device command, JES2 processes all operands preceding the incorrect operand. The operand in error, and those that follow, are ignored.
- Operators at JES2 remote workstations can normally control only the devices attached to their workstations.

Controlling the Device Environment

You issue all JES2 commands and control the JES2 environment from the operator's console. You can control the communication characteristics of the console, itself, using the $T CONDEF command.

The BUFWARN parameter sets the percentage of console message buffers used at which the $HASP050 message alerts you of a shortage of console message buffers. The BUFNUM parameter sets the maximum number of console message buffers that JES2 should obtain from common storage. The CMDNUM parameter sets the maximum number of console message buffers that JES2 should allocate for command processing.

Use the DISPLEN parameter to control message wrapping on the MCS console. It allows you to specify the length used for the display and error message processing of:

- All initialization statements
- Commands processed by $SCAN (mostly $D and $T commands for initialization statement parameters)
- The $D U command, which displays the status of all JES2 devices

The DISPMAX parameter specifies the maximum number of lines displayed for the statements and commands referred to above. MAXMSG specifies the maximum number of message or commands queued between any two members of a MAS configuration. The RDRCHAR parameter allows you to specify the character used to identify all JES2 operator commands issued from a local or remote card reader.

The CONCHAR parameter allows you to identify JES2 commands that originate from local consoles. The RDIRAREA parameter specifies the default console out-of-line area which JES2 uses to direct display responses for commands subject to redirection.

Controlling JES2 Functional Subsystems

A functional subsystem (FSS) is an address space dedicated to performing a specific function. For example, the Print Services Facility is used as a functional subsystem to operate the 3800 Model 3 and 3820 printers. You can dynamically define an FSS to JES2 using the $ADD FSS command or change the characteristics of an existing FSS definition using the $T FSS command.

The parameters are the same for both commands. You specify the name of the FSS, the name of the JCL procedure used to start the FSS, and the name of the module that is loaded into the FSS address space. The load module contains the various JES2-supplied interface routines. The AUTOSTOP parameter specifies whether or not JES2 is to automatically stop the address space when the devices attached to the FSS are drained. See the individual command descriptions in “Chapter 5. Command Reference Section” for the particular processing considerations associated with these commands.

JES2 Input Processing

This section describes the commands you use to control system input readers (local and remote), internal readers, and initiators. For a discussion of holding and releasing jobs processed by a reader, see Chapter 3, “Controlling Jobs and Output” on page 49.

Controlling Readers

At system initialization, JES2 uses the initialization deck to define all local and remote readers and assign each a number from 1 to 99. Use the device numbers with the subsystem commands, to control the various readers. Use the $D U,RDRS command or the $D RDR(nn) command to request a list of the JES2 input devices assigned to each device address.

System Input Readers

A system input reader is a physical device that reads system and subsystem commands, control statements, and user jobs to be processed by the operating system. There are three ways to start an input reader:

1. Enter the $S reader command when the device is halted, drained, or inactive.
2. Ready the reader with cards before replying to the initialization message.

3. If your installation has selected the Automatic Start Reader feature, ready the reader with cards at any time, unless the $P reader command is in effect. This feature does not apply to secondary JES2 subsystems.

JES2 provides commands for cancelling, halting, and stopping local and remote reader activity ($C, $Z, and $P, respectively). You alter reader characteristics using the $T RDRnn command ($T Rnnnn.RDm for remotes). The $T RDRnn command performs the following functions:

- Assigns command authority for the specified reader
- Specifies default routing, member affinities, and job and message classes for jobs read by the specified reader
- Holds all jobs read by a reader
- Starts or stops tracing of the JES2 processor associated with a reader

Internal Readers

An internal reader is a logical device. It is a special SYSOUT data set, available to problem programs, that allows jobs to be entered directly into the job stream from other programs executing in the system (for example, from a time-sharing user). Although you control all the internal readers much the same as an input reader, they are not real devices. You can control all internal readers using the $T INTRDR command with certain parameters, but you cannot control individual internal readers. JES2 automatically starts internal readers when they are required.

Reader devices not supported by JES2 may be supported by utilities that interface with the JES2 internal reader. For more information, see *z/OS MVS System Commands*.

JES2 Output Processing

Once a job has finished executing, the output it created must be processed. First, the job is placed on the output queue, where the output processor groups a job's output data sets together based on similar output characteristics. Each of these output groups is represented by a job output element (JOE), which is identified by a group id. Using the $L and $T O commands, you can display and modify each of these job output elements. The $D O job and $T O commands are described in Chapter 3, "Controlling Jobs and Output" on page 49.

Once the JOEs are created, the job is placed on the hardcopy queue. The JES2 print/punch processor, the functional subsystem (FSS), or the external writer can now process the job. While it is generally more efficient to use the JES2 print/punch processor or the FSS, you will occasionally want to use the external writer (for example, when you want to put your output on magnetic tape or disk). For further information, see *z/OS MVS System Commands*.

Your installation, depending on its needs, can group SYSOUT data into as many as 36 different classes. Each class consists of all system messages and SYSOUT data sets the system associates with that class name. Furthermore, users may determine the grouping of their system messages and SYSOUT data sets by using the GROUPID keyword on the OUTPUT JCL statement. Groups formed in this manner must match on class, destination, writer name, and process mode; however, groups may be formed that have SYSOUT data sets that differ on forms, burst, flash, and other characteristics.

At system initialization, JES2 uses the initialization deck to define all local printers and punches and assign a numeric identifier to each local printer (1-32767) and

punch (1-99). You use these identifiers to control the associated devices. If you are uncertain of the status or characteristics assigned to a device, you can display them using the appropriate $D U command ($D U,PRTS for printers; $D U,PUNS for punches) or $D PRT for printers.

JES2 selects output for a device on the basis of a work selection (WS=) list. This list contains criteria that must be matched exactly with the characteristics of the output device and criteria that are preferred in priority sequence. Using any combination of user- and JES2-defined criteria, you can specify up to 19 criteria in the WS= list. The individual criteria can be specified using the WS= keyword on the output device initialization statement or using the WS= operand on the following commands: $T L(nnnn).ST(n), $T OFF(n).JR, $T OFF(n).JT, $T OFF(n).SR, $T OFF(n).ST, $T PRTnnnn, and $T PUNnn.

Notes:

1. If a JES2 device becomes inoperative and you fail to get a system response when you enter a $C, $I, or $E command, reenter the command. JES2 processes the output according to the command you entered.
2. If a 3800 printer fails because of a hardware malfunction, JES2 halts that printer. After you start the printer by operator command, JES2 initiates an automatic restart.

   If you try to restart the printer by using the $E operator command, your output might be printed twice. You can control the number of output groups that refer to JOEDID1 by issuing the $L command and then cancelling unnecessary queued output.
3. When controlling remote devices, you should be aware that the central system is always several lines or cards ahead of the physical output at a remote workstation.

Controlling Printers

Starting Printers

The output characteristics of printers can be defined at initialization though the PRT(nnnn) initialization statement (for local printers defined to JES2) and the R(nnnn).PR(m) initialization statement (for remote printers), or defined dynamically. Output characteristics are the attributes that define how the printer produces output in a hardcopy format.

Starting a printer defined to JES2: Once the system has been initialized, you must use the MVS command to VARY the printer online. Then enter the $S PRT(nnnn) command to start this printer. If the initialization statement specifies SETUP=HALT, JES2 issues the $HASP190 message, which specifies what output characteristics were specified during initialization. You should verify that the output characteristics of your printer match the output characteristics specified on the initialization statement. Then reenter the $S command to activate this device.

Dynamically defining a local printer to JES2: After initialization, the $ADD PRT(nnnn) command allows you to define a local printer to JES2. Then enter the $S PRT(nnnn) command to activate this device. If you reinitialize the system, this local printer is not defined to JES2 unless it has been added to the initialization deck.

Halting, Restarting, Interrupting, Purging and Stopping Printers

The $T PRTnnnn,SETUP=HALT command allows you to specify that a printer should halt so you can verify output characteristics before it starts printing data sets. The $T PRT can only be entered on an inactive printer. Use the $Z PRTnnnn

command when you want to temporarily halt a printer in the middle of a job, rather than requeuing the job. You must use the $S PRT(nnnn) to restart this where it had been halted. The $E PRTnnnn command restarts the job, requeuing the output by its job priority. To interrupt a printer during processing of the current output group (set of a job's output data sets that share output characteristics) and return the output to the output queue, enter the $I PRTnnnn command. To purge the output currently printing, enter the $C PRTnnnn command. To stop a printer after it completes processing the current output group and then drain the device (free the associated system resources), enter the $P PRTn nnn command.

Setting Output Characteristics

You can use JES2 commands to specify printer characteristics, override a system request for a setup you are unable to fulfill, and display the controls in effect for a printer. You can also specify, verify, and reset the work selection values for a printer.

The list of work selection values specifies those output characteristics that are considered during work selection. The output characteristics for a printer are defined during initialization or dynamically through the $ADD PRT(nnnn) command. All output characteristics can be modified through the $T PRT(nnnn) command. This command allows you to remove, add, and rearrange values to the list.

The UNIT= parameter of the $T PRT(nnnn) command allows you to reassign the unit address of a JES2 printer or a non-channel attached printer. Before entering $T PRT,UNIT=, you must ensure that no address is specified on the UNIT= parameter of the initialization statement for this printer. Use the $D PRT command or the $D U, PRTS command to check the status of all output characteristics assigned at initialization. If no unit address has been assigned, enter the $T PRT,UNIT= command, followed by the $S PRT(nnnn) command.

To reassign the unit address of a channel attached FSS on an installation running on Print Service Facilities (PSF) version 1.4 or lower, you must perform the following actions:

- Ensure that the printer for this unit is defined as installation-static.
- Enter the $T PRTnnnn,UNIT= command to reassign the device address.
- Enter the $S PRTnnnn command to start the printer.

You can find whether a printer is installation-static from that printer's I/O definition file (IODF). See *z/OS HCD Planning*.

While printing the output of a data set, FSS-managed printers pre-select the next data set for printing, making that data set unselectable for another printer that may have become free. Using the PRESELCT=NO parameter on the $T PRTnnnn command, you can prevent a printer from pre-selecting data sets, making them selectable for **any** printer.

Controlling Printer Output

Use the $N PRT(nnnn) command to repeat the printing of job output. You must repeat the command for each copy, then wait for the $HASP170 PRINTER REPEATED message to appear between the scheduling of each printing.

Backspace or advance printer output a specified number of pages using the $B PRT(nnnn) and $F PRT(nnnn) commands, respectively. You can also backspace output to the beginning of a data set or to the most recent checkpoint; you can advance output to the end of a data set or advance it from the most recent checkpoint. For a complete description of the parameters you can specify on these

commands and the processing considerations associated with each, see the individual command descriptions in Chapter 5.

Processing output on a 3800: Output on a 3800 printer is not purged or requeued until that output group has reached the stacker. Normally, this task is accomplished as output groups are printed and progress through the paper path to the stacker. However, if there are no more output groups available to be printed, you must finish processing the output group before the work can be requeued or purged. Do one of the following actions:

- For the 3800-1 printer, perform a non-process runout by pressing STOP, NPRO, READY.
- Enter the $P PRTnnnn command to drain the printer.
- Make other output groups available to print.
- For the 3800-3 printer, allow the NPRO time interval to expire.

Controlling Punches

JES2 provides commands for controlling punches that are identical to those described for printers. (See the preceding sections, “Controlling Printers” and “Specifying Printer Characteristics”.) For a list of the commands used for controlling punch activity and references to the individual command descriptions, see Table 12 on page 27 at the beginning of this chapter.

Note: If a device (printers and punches) cannot select output because the device does not have sufficient access to that output, the output remains on the output queue until you:

- Change the security attributes of the device; you must then stop and restart that device for the security attributes to take affect.
- Authorize the userid associated with the output to the device.
- Change the work selection criteria of the output so that a device with the appropriate security attributes can select the output.

Remote Job Entry (RJE)

The remote job entry (RJE) facility of JES2 allows RJE workstations to use the job entry subsystem. Remote jobs are processed in the same manner as those received from local readers, printers, and punches. JES2 supports both systems network architecture (SNA) and binary synchronous communication (BSC) remote stations as RJE facilities. JES2 expects the RJE workstations to be under the control of a remote operator.

RJE workstations usually have a processor. A processor (for example, System/390®) executes a JES2-generated program that allows it to send jobs to, and receive data from, JES2. An RJE workstation, which includes printers, punches, card readers, and a console, is established by a JES2 program, RMTGEN.

An RJE workstation can also consist of a remote terminal that does not have a processor. A remote terminal (for example, a 2780 or 2770) can be used for entering jobs into, and receiving data from, JES2. For a description of the commands you can issue to control remote terminals, see “Controlling RJE Workstations” on page 38.

Specifying JES2 Teleprocessing Characteristics

You can specify the characteristics of the JES2 teleprocessing environment using the $T TPDEF command. Its parameters allow you to monitor teleprocessing buffer usage, control message queueing to a remote console, and specify the interval between autologon scans.

SNA RJE Considerations

RJE workstations use the facilities of an SNA network to gain access to JES2 through VTAM. During VTAM system definition, these RJE stations (for example, 3790 terminals, 3770 terminals, and the System/32 workstation) are defined to VTAM as logical units (LUs) and physical units (PUs). The installation must decide at VTAM system definition how to tailor the JES2/VTAM support for its SNA stations because the parameters of the LU and PU VTAM definition statements affect not only how JES2 operates, but also how the remote operator uses the station.

Controlling the JES2/VTAM Interface

In the JES2 networking environment, each job entry subsystem must have a unique name by which it is defined to VTAM. You use the APPLID parameter on the $T LOGON(n) command to identify JES2 as an application to VTAM. The $T LOGON(n) command also allows you to assign or delete a password for the JES2/VTAM interface and diagnose SNA problems by monitoring the interface and recording all SNA events on the console with master level authority. You use the $S, $P, and $E LOGON(n) commands respectively to start, stop, and restart the JES2/VTAM interface.

Controlling RJE Lines

RJE lines are the logical connections between JES2 and VTAM. Use the $T LINE(nnnn) command to specify the characteristics of a line, diagnose line problems, and disconnect a line. This command allows you to change many of the parameters specified on the LINE(nnnn) initialization statement. Use the $D U LINE(nnnn) or the $D LINE(nnnn) command to display current values through the $HASP880 message. In particular, the RMTSHARE= parameter displays whether or not a line can be dedicated to an RJE workstation.

You can dynamically define RJE workstations through the $ADD RMT(nnnn) command only if all RJE lines have been predefined at initialization.

Because teleprocessing lines are not considered active at JES2 initialization, each line must be activated using a JES2 $S LINE(nnnn) command. You issue this command through a command stream (for example, in the JES2 initialization data set), through the automatic command processor, or in a job stream. A line is dynamically allocated when activated; you deactivate a line using the $P LINE(nnnn) command. You can restart a line using the $E LINE(nnnn) command.

Note: You may also specify a range of lines on the $S, $T, $E, $P, and $D U LINE(nnnn) commands.

Controlling RJE Workstations

You can use the $T RMT(nnnn) command to dynamically change the characteristics of remote terminals you have previously defined in the initialization deck and to set terminals to disconnect after a specified period of inactivity. This command also allows SNA RJE workstations to be connected automatically. You can use the $P RMT(nnnn) command to terminate an RJE workstation connection.

Specifying RJE workstation characteristics: Use the $T RMT(nnnn) command to change the characteristics of RJE workstations. The AUTOLOG= parameter

specifies whether an SNA terminal is to be automatically connected when output or messages are queued for transmission to the terminal. The DISCINTV=nnnn parameter specifies the time interval (in seconds) after which, if there has been no session activity, the RJE workstation is disconnected from the processing unit.

The MFORM= parameter controls the amount of information displayed for JES2 BSC remote operator messages for a specified console. For messages that cannot be displayed on a console, use the MSGPRT=Y|N parameter to specify whether JES2 should print those messages (MSGPRT=Y) or discard them (MSGPRT=N). Note that certain parameters on the $T RMT(nnnn) command can only be altered when the RJE workstation is inactive.

Setting a terminal to automatically connect: The automatic logon capability is available only to terminals operating in a VTAM network using SLDC (RECORD) mode communications. Note that automatic logon does not provide for unattended operation of the terminal; the operator must continue to control the terminal and take the necessary error recovery actions. *BSC RJE workstations are not supported by automatic logon*.

If an RJE workstation is set to automatic connect mode using the $T RMT(nnnn),AUTOLOG=Y command, it is connected automatically when output (print/punch) or messages are queued for transmission to that terminal. For automatic connection to be successful, a JES2 line must be available and started.

To start an SNA remote job entry station, you must first issue the $S LOGON(n) command to start the JES2/VTAM interface. You then issue the $S LINE(nnnn) command to activate a line to VTAM for the SNA RJE station. This allows JES2 to begin processing logons from remote stations.

Note: The maximum number of sessions specified at initialization must not be exceeded.

Issue the $S RMT(nnnn) command to automatically logon to a specified SNA RJE workstation. The actual logon will take place when needed system resources are available. For a detailed description of the automatic logon facility, see *z/OS JES2 Initialization and Tuning Guide*.

Note that you cannot start a remote, whether BSC or SNA, if the remote number is already being used on another JES2 member of the MAS. Use the $D ACTRMT command to determine which RJE workstations are active in a MAS.

Disconnecting an RJE workstation: Disconnect a specific RJE workstation by entering the $P RMT(nnnn) command. If the RJE workstation is already connected when the command is entered, it will finish all printing and punching already in progress and then disconnect. If the RJE workstation is not connected, but the operator has requested its connection using the $S RMT(nnnn) command, the connection request will be cancelled.

Remote Entry Restrictions

The following tables list the remote entry restrictions for all commands. The **RJE** and **NJE** columns list the restrictions placed on a JES2 command received from either of two remote sources:

- Over an RJE line from a directly attached RJE workstation.
- Over an NJE line from another node in the network. The command was entered as the text portion of a node send ($Nnnnn) command.

The entries in these columns assume that the node at which the command originated *does not* have network authority at the receiving node. If it does, there are no restrictions (unless otherwise noted) and the command is honored as though it were entered at the local system console.

Notes:

1. System, job, or device authority is required *in addition to* network authority in order to have commands take effect at another node.
2. The tables represent the restrictions applied if there is no security product active to control commands; otherwise, the security product determines whether or not the command can be issued.

Table 17. Remote Entry Restrictions ($A-$D)

Command	RJE	NJE
$A A	Prohibited	Prohibited
$A job	Owner	(4) Owner
$ACTIVATE	Prohibited	Prohibited
$ADD APPL	Prohibited	Prohibited
$ADD CONNECT	Prohibited	None
$ADD DEStid	Prohibited	Prohibited
$ADD FSS	Prohibited	Prohibited
$ADD LINE(nnnn)	Prohibited	Prohibited
$ADD LOGON(nnn)	Prohibited	Prohibited
$ADD PROCLIB	Prohibited	Prohibited
$ADD PRT	Prohibited	Prohibited
$ADD RMT(nnnn)	Prohibited	Prohibited
$B PRT	(2) (3)	Prohibited
$B PUN	(2) (3)	Prohibited
$C A	Prohibited	Prohibited
$C job	(2)	(2)
$CO Job	Owner	Owner
$C Lnnnn.xxn	Prohibited	Prohibited
$C OFFn.xx	Prohibited	Prohibited
$C PRTnnnn	(2) (3)	Prohibited
$C PUN	(2)	Prohibited
$C RDR	Owner	Prohibited
$D A	None	None
$D ACTIVATE	None	None
$D ACTRMT	None	None
$D CONNECT	Prohibited	None
$D F	None	None
$D I	None	None
$D L(nnnn).JR(n)	None	None
$D L(nnnn).JT(n)	None	None
$D L(nnnn).SR(n)	None	None

Table 17. Remote Entry Restrictions ($A-$D) (continued)

Command	RJE	NJE
$D L(nnnn).ST(n)	None	None
$D job	Owner	Owner
$D M	None	None
$D MEMBER	None	None
$D N	(1) None	(1) None
$DO Job	Owner	Owner
$D PATH	None	None
$D PCE	None	None
$D PROCLIB	None	None
$D PRTnnnn	None	None
$D PUNnn	None	None
$D Q	(1) None	(1) None
$D RDI	None	None
$D SPOOL	None	None
$D SUBNET	None	None
$D U	None	None
$DEL CONNECT	Prohibited	None
$DEL CONNECT	Prohibited	Prohibited
$DEL PROCLIB	Prohibited	Prohibited

(1) If the R= operand is omitted from either the $D N or $D Q command, and the command is entered from a remote workstation or another node, the only jobs qualifying will be those with a default print/punch routing to that particular remote workstation or node.

If the R= operand is included in either the $D N or $D Q command, all jobs within the specified range will be displayed regardless of the default print/punch routing of the console on which the command was issued.

(2) Prohibited on local devices, but this command can be entered by the owner on remote workstations.

(3) When a non-multileaving remote device is in command input mode, output devices on that remote device are not active.

(4) Job-related commands from another node will be honored only insofar as they affect jobs “owned” by that node. A node is considered to “own” a job if the job originated at that node or if the job’s default print/punch output is destined for that node.

Table 18. Remote Entry Restrictions ($E-$O)

Command	RJE	NJE
$E Jn[-n]	(1)	(1)
$E Lnnnn.xxn	Prohibited	Prohibited
$E LINE(nnnn)	Prohibited	Prohibited
$E LOGON(n)	Prohibited	Prohibited
$E OFFn.xx	Prohibited	Prohibited
$E PRTnnnn	(1) (2)	Prohibited

Table 18. Remote Entry Restrictions ($E-$O) (continued)

Command	RJE	NJE
$E PUNnn	(1)	Prohibited
$E MEMBER(member)	Prohibited	Prohibited
$E CKPTLOCK, HELDBY=	Prohibited	Prohibited
$F PRTnnnn	(1) (2)	Prohibited
$F PUNnn	(1)	Prohibited
$G A	Owner	(3) Prohibited
$G C	Owner	(3) Prohibited
$G D	Owner	(3) Prohibited
$G H	Owner	(3) Prohibited
$G R	Owner	(3) Prohibited
$H A	Prohibited	Prohibited
$H job	Owner	Owner
$I PRTnnnn	(1) (2)	Prohibited
$I PUNnn	(1)	Prohibited
$JDDETAILS	Prohibited	Prohibited
$JDHISTORY	Prohibited	Prohibited
$JDJES	Prohibited	Prohibited
$JDMONITOR	Prohibited	Prohibited
$JDSTATUS	Prohibited	Prohibited
$JSTOP	Prohibited	Prohibited
$L job	Owner	Owner
$M N	Prohibited	(3) Prohibited
$Nnnnn	Prohibited	(3) Prohibited
$N PRTnnnn	(1) (2)	Prohibited
$N PUNnn	(1)	Prohibited
$O	Owner	Owner

(1) Prohibited on local devices, but this command can be entered by the owner on remote workstations.

(2) When a non-multileaving remote device is in command input mode, output devices on that remote device are not active.

(3) This command will always be rejected if received over an NJE line as the text portion of a node send ($Nnnnn) command, even if the sending node has network authority at the destination node.

Table 19. Remote Entry Restrictions ($P-$S)

Command	RJE	NJE
$P	Prohibited	Prohibited
$P JES2	Prohibited	Prohibited
$P I	Prohibited	Prohibited
$P job	Owner	Owner
$P Lnnnn.xxn	Prohibited	Prohibited

Table 19. Remote Entry Restrictions ($P-$S) (continued)

Command	RJE	NJE
$P LINE(nnnn)	Prohibited	Prohibited
$P LOGON(n)	Prohibited	Prohibited
$P OFFn.xx	Prohibited	Prohibited
$P OFFLOADn	Prohibited	Prohibited
$P PRTnnnn	(2) (3)	Prohibited
$P PUNnn	(2)	Prohibited
$P Q	Prohibited	Prohibited
$P RDR	(2)	Prohibited
$P RMT(nnnn)	(2)	(2)
$P SPOOL	Prohibited	Prohibited
$P TRACE(n)	Prohibited	Prohibited
$P XEQ	Prohibited	Prohibited
$PO Job	Owner	Owner
$R	(1) Owner	Owner
$R XEQ	Owner	Owner
$S	Prohibited	Prohibited
$S A	Prohibited	Prohibited
$S I[vvvv]	Prohibited	Prohibited
$S Job	Owner	Owner
$S Lnnnn.xxn	Prohibited	Prohibited
$S LINE(nnnn)	Prohibited	Prohibited
$S LOGON(n)	Prohibited	Prohibited
$S N	Prohibited	Prohibited
$S OFFLOADn	Prohibited	Prohibited
$S PRTnnnn	(2)	Prohibited
$S PUNnn	(2)	Prohibited
$S RDR	(2)	Prohibited

(1) $R requires that the job to be routed belong to the JES2 remote workstation; that is, normal print or normal punch must be routed to that workstation.

(2) Prohibited on local devices, but this command can be entered by the owner on remote workstations.

(3) When a non-multileaving remote device is in command input mode, output devices on that remote device are not active.

Table 20. Remote Entry Restrictions ($S-$T)

Command	RJE	NJE
$S RMT(nnnn)	(1)	(1)
$S SPOOL	Prohibited	Prohibited
$S TRACE(n)	Prohibited	Prohibited
$S XEQ	Prohibited	Prohibited

Table 20. Remote Entry Restrictions ($S-$T) (continued)

Command	RJE	NJE
$T A	Prohibited	(2) Prohibited
$T APPL	Prohibited	Prohibited
$T BUFDEF	Prohibited	Prohibited
$T CKPTDEF	Prohibited	Prohibited
$T CONNECT	Prohibited	None
$T CONDEF	Prohibited	Prohibited
$T DEBUG	Prohibited	Prohibited
$T DEStid	Prohibited	Prohibited
$T ESTBYTE	Prohibited	Prohibited
$T ESTIME	Prohibited	Prohibited
$T ESTLNCT	Prohibited	Prohibited
$T ESTPAGE	Prohibited	Prohibited
$T ESTPUN	Prohibited	Prohibited
$T EXIT(nnn)	Prohibited	Prohibited
$T FSS	Prohibited	Prohibited
$T I	Prohibited	Prohibited
$T job	Prohibited	Prohibited
$T JOBCLASS(n)	Prohibited	Prohibited
$T JOBDEF	Prohibited	Prohibited
$T JOBPRTY(n)	Prohibited	Prohibited
$T LINE(nnnn)	Prohibited	Prohibited
$T LOGON(n)	Prohibited	Prohibited
$T M	Prohibited	Prohibited
$T MASDEF	Prohibited	Prohibited
$T MEMBER(member)	Prohibited	Prohibited
$T NJEDEF	Prohibited	Prohibited
$T NODE(nnnn)	Prohibited	Prohibited
$T NUM	Prohibited	Prohibited
$T O	Owner	Owner
(1) Prohibited on local devices, but this command can be entered by the owner on remote workstations. (2) This command will always be rejected if received over an NJE line as the text portion of a node send ($Nnnnn) command, even if the sending node has network authority at the destination node.		

Table 21. Remote Entry Restrictions ($T-$Z)

Command	RJE	NJE
$T OFF(n).JR	Prohibited	Prohibited
$T OFF(n).JT	Prohibited	Prohibited
$T OFF(n).SR	Prohibited	Prohibited
$T OFF(n).ST	Prohibited	Prohibited

Table 21. Remote Entry Restrictions ($T-$Z) (continued)

Command	RJE	NJE
$T OFFLOAD(n)	Prohibited	Prohibited
$T OUTCLASS(n)	Prohibited	Prohibited
$T OUTDEF	Prohibited	Prohibited
$T OUTPRTY(n)	Prohibited	Prohibited
$T PCE	Prohibited	Prohibited
$T PRINTDEF	Prohibited	Prohibited
$T PROCLIB	Prohibited	Prohibited
$T PRTnnnn	(2) (3)	Prohibited
$T PUNnn	(2)	Prohibited
$T INTRDR	(2) Prohibited	Prohibited
$T RDRnn	(2) Prohibited	Prohibited
$T RECVopts	Prohibited	Prohibited
$T RMT(nnnn)	Prohibited	Prohibited
$T SMFDEF	Prohibited	Prohibited
$T SPOOLDEF	Prohibited	Prohibited
$T SSI(nnn)	Prohibited	Prohibited
$T TPDEF	Prohibited	Prohibited
$T TRACEDEF	Prohibited	Prohibited
$VS	Prohibited	(4)
$Z A	Prohibited	Prohibited
$Z I	Prohibited	Prohibited
$Z OFFLOADn	Prohibited	Prohibited
$Z PRTnnnn	Prohibited	Prohibited
$Z PUNnn	Prohibited	Prohibited
$Z RDRnn	Prohibited	Prohibited
$Z SPOOL	Prohibited	Prohibited

(1) Prohibited on local devices, but this command can be entered by the owner on remote workstations.

(2) When a non-multileaving remote device is in command input mode, output devices on that remote device are not active.

(3) This command will always be rejected if received over an NJE line as the text portion of a node send ($Nnnnn) command, even if the sending node has network authority at the destination node.

(4) Job-related commands from another node will be honored only insofar as they affect jobs “owned” by that node. A node is considered to “own” a job if the job originated at that node or if the job’s default print/punch output is destined for that node.

Controlling Spool Offload and Reload Functions

This section describes the JES2 commands you use to control the spool offload devices and the corresponding transmitters and receivers. For an overview of the spool offload facility, initializing offload devices, and issuing commands for controlling spool offload operations, see *z/OS JES2 Initialization and Tuning Guide*.

Spool offload devices are started dynamically with operator commands. Eight spool offload devices can be defined per system; however, only a maximum of eight can be active within the MAS configuration. Each individual device corresponds to a unique offload data set.

A job transmitter, SYSOUT transmitter, job receiver, and SYSOUT receiver are automatically associated with each offload device defined. These enable the offload device to control both offload (TRANSMIT) and reload (RECEIVE) functions. When specifying one of these transmitters or receivers, you must specify the device number of the associated offload device.

Controlling Offload Devices

JES2 provides commands you can issue for:

- Starting an offload device
- Draining an offload device
- Halting an offload device
- Setting offload data set characteristics

Starting an offload device

When an offload device is started, any associated transmitters/receivers that have been started, will become active. If the offload device is already in use on any member in the multi-access configuration, JES2 denies the start and the $HASP593 message is issued. If the corresponding data set is already in use by another offload device, JES2 denies the start and issues the $HASP614 message.

Draining an offload device

The current job completes processing before the device is allowed to drain. This draining process stops the selection process for associated transmitters and receivers that are currently active. When the device is drained, JES2 closes and deallocates the offload data set.

If you issue the $P OFFn.xx (where xx is JT, JR, ST, or SR) command for an offload device that has been halted ($Z) during the receive operation, you may need to restart the reload operation to finish the job that was halted. Then the device will drain.

Note: On the receive operation, the offload device is automatically drained when an end-of-file is encountered.

Halting an offload device

Halting an offload device does not cause the offload data set to be deallocated, but the selection process for active transmitters and receivers is automatically stopped so that the operator can reset the work selection criteria before restarting the transmit or receive operation.

If you issue the $Z command during the transmit operation, any active transmitter(s) will finish processing their currently active jobs before the selection process is halted. If you issue the $Z command during the receive operation, any active receivers will be halted immediately in the middle of the

jobs being processed. When the receive operation is restarted, the offload device will begin to read the offload data set at the point where it was halted.

Displaying the status of an offload device

You can display detailed information about a specific offload device ($D OFFLOAD(n)), or about all offload devices defined to JES2 ($D U,OFFS). Unless you request limited status information, the status of all corresponding transmitters and receivers is also displayed.

Setting offload data set characteristics

You may set offload data set characteristics only if the indicated offload device is drained.If you are uncertain of the characteristics in effect, you may display the characteristics for the offload device in question. Use $D OFFLOAD(n) to display detailed information about an offload device; use $T OFF(n).xx,WS= to set offload data set characteristics.

Controlling Offload Transmitters and Receivers

JES2 provides commands you can issue for:

- Starting offload transmitters and receivers
- Draining offload transmitters and receivers
- Displaying the status of offload transmitters and receivers
- Setting offload transmitter and receiver characteristics
- Canceling jobs on offload transmitters and receivers
- Restarting offload transmitters.

Starting offload transmitters and receivers

You can cause a specified offload transmitter or receiver to automatically start each time the corresponding offload device is started. If the offload device is already active, the transmitter or receiver will start immediately. Only one job transmitter and one SYSOUT transmitter can be started for a specific offload device and they must be specified with the corresponding device number. The same rule applies to job receivers and SYSOUT receivers. For example, if you issue the $T OFF1.JR and $T OFF1.SR commands, JES2 automatically starts the offload job and SYSOUT receivers for offload device 1 when you issue the $S OFFLOAD1,TYPE=RECEIVE command.

Note: If you issue the display command for the transmitters or receivers ($D OFFn.xx) before the associated offload device is started, it will display their status as “STARTABLE”.

Draining offload transmitters and receivers

When you issue the $P OFFn.xx command, the current job completes processing before the device is allowed to drain. Once drained, the transmitter or receiver will not be automatically started when the corresponding offload device is started; it must be individually started using the $S OFFn.xx command.

If both receivers have been drained while the corresponding offload device is still active, the offload device will be automatically halted. You can then terminate the reload operation by issuing the $P OFFLOADn command or continue loading by starting the offload receivers ($S OFFn.xR).

Displaying the status of offload transmitters and receivers

You can display detailed information about specific offload job transmitters and offload SYSOUT transmitters using the $D U,OFFn.XT command. The $D U,OFFn.xR does the same for offload job and SYSOUT receivers.

Setting offload transmitter and receiver characteristics

You can specify the work selection characteristics of an offload job transmitter

or receiver by issuing the $T OFFn.xx,WS= command. You can do the same for offload SYSOUT transmitters and receivers. If you are uncertain of the characteristics in effect, you can display the characteristics for a particular offload transmitter or receiver by issuing the $D U,OFFn.xx command.

Canceling offload transmitters and receivers

The job currently active on a transmitter or receiver may be cancelled by issuing the $C OFFn.xx command. When canceling a job transmitter, the job will be terminated and deleted from the queue from which it was selected. The transmitter then selects the next job eligible for processing. When canceling a SYSOUT transmitter, the output groups for the job that were eligible to be offloaded according to the work selection criteria, will be terminated and deleted from the queues from which they were selected. The transmitter then selects the next job eligible for processing. When canceling a receiver, reception of job or SYSOUT data continues until the end-of-job indicator is recognized, at which time the received job is deleted from JES2 spool. The transmitter/receiver continues processing as long as the spool offload media device provides data.

Restarting offload transmitters

Processing of the job currently active on a transmitter may be interrupted by issuing the $E OFFn.xT command. Restarting an offload transmitter is similar to the cancel command with the exception that the job is not deleted from JES2 spool but remains on the queue from which it was selected. The transmitter continues by selecting the next job eligible for processing, which may be the same job that was interrupted. To prevent the interrupted JOB/SYSOUT from being re-selected, the job should be put in HOLD status prior to the $E OFFn.xT command.

Chapter 3. Controlling Jobs and Output

This chapter describes the JES2 commands you use to start and stop jobs and to control the flow of work through the system and the network. It also describes the JES2 commands you use to control the output of jobs. These commands allow you to display job information.

The following tables list the tasks discussed in this chapter and provide a cross reference to detailed descriptions of the corresponding commands.

Table 22. Displaying JES2 Job Information

Task	Command	Location
Display job queue information	$D N	"$D N - Display Job Queue Information" on page 303
Display the number of jobs queued	$D Q	"$D Q - Display the Number of Jobs Queued" on page 392
Display the job output forms queue	$D F	"$D F - Display the Job Output Forms Queue" on page 228
Display jobs on the rebuild queue	$D REBLD	"$D REBLD - Display Rebuild Queue Information" on page 406
Display information about active jobs	$D A	"$D A - Display Information About Currently Active Jobs" on page 187
Display information about specified jobs	$D job	"$D Job - Display Information About Specified Jobs" on page 241
Display count of output group information	$L job	"$L Job - List Job Output Information" on page 508
Display information about specified output groups	$DO Job	"$D O Job - Display Output Characteristics" on page 319
Display information for a job at another node	$G D	"$G D - Display Job Information for a Job at Another Node" on page 474
Display a message at another operator console or send a message to an executing job's JES2 job log	$D M	"$D M - Send a Message" on page 284

© Copyright IBM Corp. 1988, 2002

Table 23. Specifying Job Execution Characteristics

Task	Command	Location
Set the JES2 internal job numbers	$T NUM	"$T NUM - Set the JES2 Internal Job Numbers" on page 711
Specify the JES2 job characteristics	$T JOBDEF	"$T JOBDEF - Set Job Processing Characteristics" on page 668
Specify the JES2 job scheduling priority	$T JOBPRTY(n)	"$T JOBPRTY(n) - Set Job Scheduling Characteristics" on page 673
Specify the estimated execution time for jobs	$T ESTIME	"$T ESTIME - Control the Default Execution Time" on page 632

Table 24. Controlling Initiators

Task	Command	Location
Start an initiator	$S I	"$S I[vvvv] - Start an Initiator" on page 563
Display initiator information	$D I	"$D I[nnmm] - Display Initiator Information" on page 235
Assign initiator classes	$T I	"$T Init - Control Initiators" on page 644
Halt an initiator	$Z I	"$Z I[vvvv] - Halt Initiator Activity" on page 851
Stop an initiator	$P I	"$P I[nnmm] - Stop an Initiator" on page 522
Start initiation of batch jobs into execution	$S XEQ	"$S XEQ - Allow JES2 and WLM-Controlled Initiators to Select Work" on page 594
Stop initiation of batch jobs into execution	$P XEQ	"$P XEQ - Prevents JES2 and WLM-Controlled Initiators from Work" on page 553

Table 25. Controlling Job Execution

Task	Command	Location
Route specified jobs for execution	$R XEQ, D=	"$R XEQ - Route Specific Jobs for Execution" on page 559
Cancel a job	$C job	"$C Job - Cancel a Job" on page 168
Purge a job	$P job	"$P Job - Purge a Job" on page 527
Drain a spool volume (process/cancel remaining jobs)	$P SPOOL	"$P SPOOL - Drain a Spool Volume" on page 549
Restart a currently executing job	$E Job	"$E Job - Restart a Job" on page 449
Change a job's class, scheduling priority, or member affinity	$T job	"$T Job - Change a Job's Class, Scheduling Priority, or Affinity" on page 651
Initiate a batch job into execution	$S Job	"$S Job - Initiate a Batch Job into Execution" on page 565
Specify an XBM procedure to be used for jobs in a selected class.	$T JOBCLASS(n)	"$T JOBCLASS - Set Job Class Characteristics" on page 659

Table 26. Holding and Releasing Jobs

Task	Command	Location
Hold all jobs	$H A	"$H A - Hold All Jobs" on page 484
Release all jobs	$A A	"$A A - Release All Jobs" on page 105
Hold specified jobs	$H job	"$H Job - Hold Specific Jobs" on page 486
Release specified jobs	$A job	"$A Job - Release Held Jobs" on page 106
Hold job queues	$T JOBCLASS(x),QHELD=Y	"$T JOBCLASS - Set Job Class Characteristics" on page 659
Release job queues	$T JOBCLASS(x),QHELD=N	"$T JOBCLASS - Set Job Class Characteristics" on page 659

Table 27. Controlling Jobs at Another Node

Task	Command	Location
Hold a job at another node	$G H	"$G H - Hold a Job at Another Node" on page 476
Release a job at another node	$G A	"$G A - Release a Job at Another Node" on page 470
Cancel a job at another node	$G C	"$G C - Cancel a Job at Another Node" on page 472
Request another node to route a job for execution	$G R	"$G R, XEQ - Request Another Node to Route a Job for Execution" on page 481
Request another node to route job output	$G R	"$G R, OUT - Request Another Node to Route Job Output" on page 478

Table 28. Specifying Job Output Characteristics

Task	Command	Location
Set output characteristics	$TO Job	"$T O Job - Set Output Characteristics" on page 712
Specify JES2 job output characteristics	$T OUTDEF	"$T OUTDEF - Set Job Output Characteristics" on page 759
Set job class characteristics	$T JOBCLASS(n)	"$T JOBCLASS - Set Job Class Characteristics" on page 659
Set SYSOUT class characteristics output classes	$T OUTCLASS(n)	"$T OUTCLASS(n) - Set SYSOUT Class Characteristics" on page 756
Specify JES2 output scheduling priority	$T OUTPRTY(n)	"$T OUTPRTY(n) - Set Output Scheduling Priorities" on page 763
Specify the estimated amount of spool space needed for a job output	$T ESTBYTE	"$T ESTBYTE - Control the Default Spool Space Utilization Per Job" on page 630
Specify the estimated print line count for job output	$T ESTLNCT	"$T ESTLNCT - Control the Default Print Line Count Per Job" on page 634
Specify the estimated page count for job output	$T ESTPAGE	"$T ESTPAGE - Control the Default Page Count Per Job" on page 636
Specify the estimated number of punched cards for job output	$T ESTPUN	"$T ESTPUN - Control the Default Punched Card Output Per Job" on page 638

Table 29. Controlling Output

Task	Command	Location
Release or cancel held output data sets	$O	“$O Job - Release or Cancel Held Output Groups” on page 516
Cancel output groups	$PO Job	“$P O Job - Purge a Job’s Output” on page 535
Route job output	$R ,D=	“$R - Route Job Output” on page 554
Cancel output groups	$CO Job	“$C O Job - Cancel Output” on page 176

Controlling Jobs

For JES2, a “job” can actually be a batch job, started task, or time-sharing user (known as a job, STC, and TSU, respectively). They are further identified by a job identifier (jobid), which is an eight-character string of the form “JOBnnnnn”, “J0nnnnnn”, “STCnnnnn”, “S0nnnnnn”, “TSUnnnnn”, and “T0nnnnnn” respectively. You can control the action JES2 is to take on jobs, (for example, cancel, display, or hold), and you can control the display of information about jobs, as the following topics explain.

Controlling the Scope of Commands

Operators can control batch jobs, started tasks (STCs), and time-sharing userids (TSUs) through commands, parameters (for example, the JOBQ and JOBMASK parameters) and wildcards.

Using Parameters on Job-Related Commands

The JOBQ and JOBMASK parameters can help you to limit the amount of processing needed to control batch jobs, STCs and TSUs. You can specify these parameters on the job-related commands listed below.

Use the JOBQ parameter to control **all** batch jobs, STCs, and TSUs. Use the JOBMASK parameter to select, or filter, a subset of jobs whose job name matches this combination of characters (mask). The JOBMASK parameter can include wildcard characters.

For example, to display all batch jobs, STCs, and TSUs whose name begins with the characters IBM, enter the command:

```
$D JOBQ, JOBMASK=IBM*
```

The command produces a display of jobs meeting the JOBMASK criteria anywhere in the MAS.

For more information about using wildcards, see “Using Wildcards” on page 93.

Job-Related Commands: The JOBQ and JOBMASK parameters can be specified on the following commands:

- $A Job
- $C Job

- $CO Job
- $D Job
- $DO Job
- $E Job
- $H Job
- $L Job
- $O Job
- $P Job
- $PO Job
- $T Job
- $T O

On the $E job command, only the JOBMASK parameter can be specified.

Displaying Job Information

You can display job information to monitor the JES2 system and control job processing. Displaying information such as the amount of output for jobs in the held output class and the output processing characteristics of designated output groups enables you to plan job execution. You may wish to change some of this information to process jobs more efficiently. (For information about the $T commands you can specify to change output processing characteristics, see “Controlling Job Output”).

Using the MVS CONTROL command, you can include the job identifier in the message output. For example, you first enter the MVS command

```
CONTROL S,MFORM=(J)
```

Now, when you enter JES2 commands such as:

```
$d jq'myjob'

JOB00017 $HASP890 JOB(MYJOB)
$HASP890 JOB(MYJOB)   STATUS=(AWAITING EXECUTION),CLASS=H,
$HASP890              PRIORITY=9,SYSAFF=(ANY),HOLD=(JOB)
```

the job identifier is displayed before the message number. For more information about using the MVS CONTROL command see *z/OS MVS System Commands*.

JES2 allows you to display the following job information:

Number of jobs on a queue
The $D Q command displays the number of jobs on a particular queue. The parameters on this command allow you to display detailed job information, including the percentage of spool disk utilization for all jobs that have data on the spool volume specified on the V=volser parameter.

Number of jobs on the rebuild queue
Use the $D REBLD command to display all job output elements (JOEs) and job queue elements (JQEs) on the rebuild queue and the total number of each. JES2 moves JOEs and JQEs to the rebuild queue when JES2 determined that particular element was not valid or corrupted. Typically the rebuild queue is empty; however, you might find this command useful if:
- You receive messages indicating that JOEs or JQEs are pending discard and you require further information.
- In response to other display commands, JES2 indicates the job is not found or found on the rebuild queue.

Currently active jobs

Use the $D A command to display information about currently active jobs (batch jobs, started tasks, and time-sharing users). You can also display information about jobs being processed on unit record devices or spool offload devices. For example, issuing $D A,SYSA,DEV,L=4A displays information on area A of console 4 for all jobs (batch, STCs, and TSUs) active on unit record devices on the member whose identifier is SYSA.

The MVS DISPLAY ACTIVE command provides further information about active jobs. For a description of this command, see *z/OS MVS System Commands*.

For specific jobs

To display information about a specific job or range of jobs, issue the $D job command. The $HASP890 message displays number, name, status, class, priority, and spool volume information for the specified job(s).

Job output forms queue

Use the $D F command to display the number of data sets queued for output. The $HASP621 message displays the destination and processing requirements (such as forms, carriage, print train, bursting) of the work on the output forms queue.

Note: The $D F command does not display specific job information; it displays only the number of queued elements according to their attributes.

Job queue information

Use the $D N command to display information about a specific job or range of jobs:

- Whose affinities include that specified (member name)
- With affinities of ANY
- For all jobs in the MAS configuration (ALL)
- For all jobs whose affinity is for members operating in independent mode (IND)

The $HASP890 message displays number, name, status, class, priority, and affinity information. The $HASP646 message displays the percentage of spool disk utilization for the specified jobs that have data on the spool volume specified on the V=volser parameter.

Output information

Use the $L job command to display the number of held or non-held data sets for a specified job or range of jobs. Use the $DO Job command to display the output processing characteristics of specified output groups or individual job output elements (JOEs).

For a job at another node

Issue the $G D command to display information about jobs you previously routed for execution at another node (by using the $R XEQ,D= command) or to display information about *any job at any node* (subject to your node's command authority at that node). You must specify the O= parameter if the job did not originate at your node.

You can also use the $G D command to locate a job. By omitting the destination name, you are effectively issuing a global locate command that is sent to all reachable nodes in the network. Each node responds individually in this case.

Display a message

Issue the $D M command to display a message on a specified operator

console or a range of consoles. This includes remote workstations at other nodes and consoles at other MAS members.

You may also use this command to send a message to an executing job's JES2 job log. The job can be on any member of the MAS, but must be currently executing within the MAS, not awaiting execution or output.

Controlling Job Execution

Batch jobs are selected for execution by initiators, each one running in a separate address space. Initiators are controlled by JES2 or by the workload manager (WLM). Who controls the initiators is determined by the job class and by the MODE= parameter (JES or WLM) in the JOBCLASS statement. JES2 maintains two different queue organizations for all jobs awaiting execution to service the two different selection mechanisms:

1. All jobs are queued by job class, priority, and the order in which they finished conversion. This is the queue from which JES2 managed initiators select jobs for execution.
2. Jobs awaiting execution in WLM managed job classes are also queued by their WLM assigned service class in the order they were made available for execution. This is the queue from which WLM managed initiators select jobs for execution.

You can switch job classes between JES mode and WLM mode with the $T JOBCLASS,MODE= command.

Controlling JES2 Initiators

JES2 associates one logical initiator residing in JES2 with each system initiator interfacing with JES2. You can control the number of active logical initiators and, using commands or during JES2 initialization, you associate logical initiators with the order in which JES2 selects the classes. During execution, an initiator selects non-held jobs in priority order within each non-held class in the order specified for that initiator. That is, the lowest priority job in the first non-empty class is selected ahead of the highest priority job of the next class assuming neither job nor class is held. The only exception is that a job with a name duplicating a job currently in execution will not be selected until after the executing job completes.

At system initialization, JES2 uses the initialization deck to assign an identifier to each initiator, to a maximum of 9999. Use these identifiers with JES2 commands to control the initiators. For information about naming initiators, see *z/OS JES2 Initialization and Tuning Reference*.

When JES2 finishes reading a job that is to be executed locally, it is converted and placed in one of the execution queues according to its job class. The appropriate job class is determined by:

- The CLASS= parameter on the JCL JOB statement.
- The JES2 command $T J(n), C=class, which you may issue to change the job class after the job has been read and queued.
- The default class assigned for that particular reader if the CLASS= parameter is not specified on the JCL JOB statement and you did not alter the job class.

Jobs are placed on the queues in priority sequence. Jobs of the same priority are selected on a first-in first-out basis. A job's priority is determined by:

- The JES2 command $T J(n), P=priority, which you may issue to change the job's priority after the job has been read and queued.
- The /*PRIORITY control statement.
- The job time estimate information on the JOB statement or /*JOBPARM statement.

When an initiator is started, it will search its assigned queues for a job to process. On completion, it searches its queues for another job. The initiator processes jobs in priority order; for example, if the initiator is assigned classes A, B, and X, it will initiate only class A jobs as long as there are class A jobs ready for execution. When no class A jobs are available, the initiator will select only class B jobs or, if no class A or B jobs are available, class X. If there are no jobs available in the assigned classes, the initiator is inactive until such jobs are available.

This process is repeated each time an initiator attempts to select a job. An exception to this order of selecting jobs occurs when an execution batch monitor is active. Inthis case, the execution batch monitor class temporarily assumes the highest priority (for as long as the execution batch monitor remains active), thus reducing the overhead of bringing an execution batch monitor in and out of the system.

Initiator Commands

JES2 provides commands you issue to display initiator information, assign initiator classes, halt, start, and stop initiators. For a list of the JES2 commands associated with these functions and references to their detailed command descriptions, see Table 24 on page 50 at the beginning of this chapter.

Controlling WLM Initiators

Job initiators for WLM managed job classes are controlled dynamically by workload management. These initiators run under the Master Subsystem and are not assigned JES2 job numbers. WLM can adjust the number of initiators on each system based on:

- The queue of jobs awaiting execution in WLM managed classes
- The performance goals and relative importance of this work
- The success of meeting these goals
- The capacity of each system to do more work.

The following must also be true for WLM managed initiators to be active:

1. OS/390 JES2 Release 4 must be active on all members in the MAS.
2. Once all members are at JES2 Release 4, the $ACTIVATE command must be issued on one of the members.
3. WLM must be operating in Goal mode. All members of the MAS must be in goal mode for consistent operation.

Although workload management dynamically controls its initiators, there are several mechanisms by which you can manage them with JES2 commands:

- Limit the number of jobs in each class that can execute simultaneously in the MAS by using the XEQCOUNT=MAXIMUM= parameter on the JOBCLASS statement. This can be altered with the $T JOBCLASS command. There is no facility to control the number of jobs in execution by class on an individual system basis.
- Stop or start the selection of batch jobs by JES or WLM managed initiators on an individual system with the $P XEQ and $S XEQ commands. The initial setting

when JES2 first initializes is to allow selection. If you want to prevent this, place a $P XEQ command in your JES2 initialization deck.

- Immediately start the execution of a batch job in a WLM managed job class, with the $S Job operator command. Workload management will select the job for immediate execution from the list of systems where the job is eligible to run (based on SYSAFF and SCHENV parameters). This is processed even if the job is held.

Specifying JES2 Job Characteristics

You can control job execution by specifying JES2 job characteristics in the following ways:

Set the JES2 internal job numbers

The $T NUM command allows you to set (or reset) the JES2job number base. JES2 assigns the new number base to the next job entering the system; if the specified number is being used, JES2 assigns the next available number to the job.

Use the $T NUM,BASE= command to help you track all new work entering the system or when performing a reload operation. The $HASP609 message displays the new job number base.

Note: If you enter the $D JOBDEF command after issuing the $T NUM command, the JNUMBASE field displays a value 1 less than the one you specified on the $T NUM command. The next job number is actually the value of JNUMBASE + 1.

Specify JES2 job characteristics

The $T JOBDEF command allows you to control scanning of the job's JCL as well as prioritization in relation to the length of time the job awaits execution. Additional parameters allow you to specify when you are to be alerted of a shortage of job numbers and a shortage of job queue elements.

Specify job scheduling priority

The $T JOBPRTY(n) command allows you to specify the job scheduling priority in relation to execution time. This command affects only those jobs that have not yet entered the system. When you enter the $T JOBPRTY(n) command, the $HASP832 message displays the current values of all the parameters on the JOBPRTY(n) initialization statement.

Specify the estimated execution time for jobs

The $T ESTIME command allows you to specify the default time for jobs that have not yet been selected for execution and the action that JES2 takes (to notify you at specified intervals or not) if a job exceeds this time. You can issue the $T JOBPRTY(n) command to increase the priority of jobs that have exceeded the time specified on the $T ESTIME,NUM= command.

There are other JES2 commands you can issue that allow you to specify job characteristics that control job output. These commands are described in the "Controlling Job Output" section later in this chapter.

JES2 Job Execution Commands

JES2 allows you to issue commands to control job execution in the following ways:

Route specified jobs for execution

Issue the $R XEQ,D= command to route specified jobs to another node (D=) for execution. You can use the J= parameter to specify a particular batch job to

be routed or use the R= parameter to specify that all jobs in the system are to be routed to the node named on the D= parameter.

You can still control the execution of jobs you've routed to another node. For a description of the commands you can use, see "Controlling Jobs at Another Node" later in this chapter.

Stop a job

Use the $C job command to cancel a job or time sharing user (TSU) *immediately*, regardless of the member of the MAS on which the job is executing. To stop a job *after it has completed its current activity* and remove all traces of it from the system, issue the $P job command. STCs, however, can only be cancelled using these commands after they have executed. (Use the MVS CANCEL command if you wish to cancel these types of jobs during execution.)

The $C job command terminates the scheduling of a job or range of jobs. If the job is in execution, you can also request a storage dump to diagnose a problem by specifying $C job,D. Issue the $C job,P command to purge the job output.

The $P job command cancels job output and purges all information about the job from the system. The $P job,Q= command allows you to specify up to 36 classes of output to be cancelled for the job. However, if data for the job remains queued in an output class you did not specify, JES2 does not cancel the job from the system.

The CANCEL parameter on the $P SPOOL,V=volser,CANCEL command cancels all jobs on the volume that can be cancelled. If any job being cancelled has data sets residing on another volume, those data sets are also cancelled. JES2 issues the $HASP890 message to display the status of cancelled jobs.

Restart a currently executing job

Issue the $E Jn[-n] command to queue one or more batch jobs for re-execution, regardless of which member of the MAS the job is on. If you wish to restart a job, butdo not want it to execute at this time, first hold the job using the $H command, then issue the $E command.

Change the execution class, scheduling priority, or affinity

Use the $T job command to change these characteristics for a single job or a specified range of jobs.

The $T JOBCLASS(n),XBM=xxxxxxxx command allows you to specify that all jobs in the specified class (n) be processed by the named execution batch monitor procedure.

Holding and Releasing Jobs

Jobs being processed, or waiting to be processed, are kept on a job queue in priority sequence. You can issue JES2 commands to hold and release specified jobs or all jobs currently in a system. You can also keep jobs in specified job queues or all job queues from being executed until you release them.

The following describes the JES2 commands you can issue to hold and release local jobs and queues. For information about holding and releasing jobs at another node, see "Controlling Jobs at Another Node" later in this chapter.

Holding and Releasing All Jobs

Use the $H A command to hold all jobs currently in the member from which the command is issued. Issuing $H A,memname holds all jobs in the MAS configuration whose affinities include the specified member name; $H A,ALL

holds all jobs in the MAS configuration regardless of affinity. Use the $A A command with the same parameters to release the held jobs.

Holding and Releasing Specified Jobs

Use the $H job command to hold a specific job or a range of jobs . For example, issuing $H J5-8 places batch jobs 5, 6, 7, and 8 in hold status. The current status of the indicated jobs is displayed in the $HASP890 message.

The $A job command releases specified jobs in the same manner. The current status of the indicated jobs is displayed in the $HASP890 message.

Note: The $A job command may be used to release any held job or range of jobs, not just those held by the $H job command.

Holding and Releasing Job Queues

Use the $T JOBCLASS(x),QHELD=YES command to keep jobs in a specified job queue from being executed. To allow jobs on that queue to be executed again, issue $T JOBCLASS(x),QHELD=NO.

Controlling Jobs at Another Node

JES2 allows you to route jobs for execution at other nodes using the $R XEQ,D= command. You can display information about these jobs using the $G D command and control their processing using the commands described in this section.

Note: You may issue the $G D command or any of the commands listed in the following description for *any job at any node*. Yours does not have to be the originating node.

The following considerations apply to all $G commands issued to display information about, or control, jobs at another node:

- The destination node must have your node flagged as having job authority. If the job did not originate at your node or have default print/punch output for your node, the destination node must have your node flagged as having network authority. (The destination node can issue the $T NODE(nnnn),AUTH= command to assign your node command authority.)
- If more than one job has the specified job name, you'll need to specify the job ID. If you do not know the job ID, issue the $G D command to display the IDs of all of the jobs with this name at a specific node.

You can control jobs at another node in the following ways:

- Issue the $G H command to hold a job at another node.
- Issue the $G A command to release a job at another node.
- Issue the $G C command to cancel a job at another node:
  - The $G C command allows you to terminate the scheduling or execution of a batch job. You can also issue this command to cancel STCs or TSUs after they have completed execution.
  - To diagnose a problem, you may specify the D parameter to request a storage dump upon cancellation. Alternatively, you may cancel the job output by specifying the P parameter. You *must* specify the P parameter to cancel a job that is already in the output processing phase.
- Issue the $G R command to request another node to route a job to yet another node for execution. By issuing the $G R command, you are, in effect, issuing a $R XEQ,D= command for another node.
  - You can also issue the $G R command to route normal output for a job at another node to an alternate location. You are, in effect, issuing a $R ,D= command for another node.

Controlling Job Output

Following job execution, JES2 queues each output unit of work for a job according to a priority based on the volume of output represented by that work unit. Alternatively, you can specify a priority on the JCL OUTPUT statement to control job queuing.

Job output elements (JOEs) are created by JES2 during output processing (or during execution in the case of spinoff data sets.) Each JOE represents a unit of output work to JES2 and is queued in order of output priority. If a priority was not specified on the JCL OUTPUT statement, a separate JOE priority is computed for each JOE using the tables specified by the PRIORITY parameter on the OUTPRTY initialization statement in combination with either the RECORD parameter statement for line data, the PAGE parameter for page data, or both the RECORD and PAGE parameters for data containing both line and page data.

The JOE priority is computed based on the total number of print lines, punch cards, or pages in the data set which the JOE represents. If the JOE represents a data set containing both line and page data, the output priority is the average of the priorities specified by the RECORD and PAGE parameters, respectively. The default table values for the priority calculation are presented in *z/OS JES2 Initialization and Tuning Reference*.

Specifying Job Output Characteristics

JOEs are selected for output processing based on the job's output priority. The original priority is set by the OUTPRTY(n) statement, but this level is permitted to increase based on the minimal priority aging level set by the PRTYLOW= and the maximum priority aging level set by the PRTYHIGH= parameters on the OUTDEF statement at a rate as specified by the PRTYRATE= parameter on the JOBDEF statement. You can use JES2 commands to specify these and other parameters and control output processing.

JES2 allows you to specify print train and either carriage tape name or forms control buffers for SYSOUT directed to printers with these features. JES2 also supports the 3525 print and interpret features for SYSOUT data sets. Additionally, you can specify all options and features of the 3800 printer for SYSOUT data sets directed to the 3800. This allows you to minimize operator interaction due to forms, carriage tape, and print train loading for impact printers, and forms, overlay frames, and burster loading for the 3800.

You can specify JES2 output characteristics in the following ways:

Set output characteristics for JOEs

There are two ways of dynamically changing the output characteristics for all or selected JOEs belonging to the specified job(s):

- By using SDSF or a functionally equivalent product to access the output JCL statements
- By using the $T O command to set output characteristics

Since all JES2 output characteristics are assigned on either output JCL statements or on JES2 initialization statements, it is recommended that you use the SDSF interface to change the output characteristics for a SYSOUT data set. For further information about the SDSF interface, refer to the *SDSF Guide and*

Reference. For further information on output JCL statements, refer to *z/OS MVS JCL Reference*. The following table lists all output characteristics and shows how they can be dynamically modified.

Table 30. Changing Output Characteristics for SYSOUT Data

Output Characteristic keyword	Purpose	How To Modify
ADDRESS=	Specifies an address to be printed on print separator pages.	SDSF
BUILDING=	Specifies a building location to be printed on print separator pages.	SDSF
BURST=	Directs output to a stacker on a 3800 printer subsystem.	SDSF(BURST=) or $T O line command (B=)
CLASS=	Assigns the data set to an output class.	SDSF(CLASS=) or $T O line command (Q=)
COMSETUP=	Specifies options for microfiche printers.	SDSF
CONTROL=	Specifies that the data set records begin with carriage control characters or specifies line spacing.	SDSF(CONTROL=) or $T O line command (C=)
DEPT=	Specifies a department identification to be specified on separator pages.	SDSF
DEST=	Sends a data set to the specified destination.	SDSF(DEST=) or $T O line command (D=)
FLASH=	Indicates that the data set is to be printed with forms overlay and can specify how many copies are to be flashed.	SDSF(FLASH=) or $T O line command (O=)
FORMS=	Identifies forms on which the data set is to be printed or punched.	SDSF(FORMS=) or $T O line command (F=)
FORMDEF=	Names a library member that PSF uses in printing the SYSOUT data set on a page-mode printer.	SDSF
NAME=	Specifies the preferred name to be printed on output separator pages.	SDSF
NOTIFY=	Specifies the print complete message to as many as four users.	SDSF
OUTBIN=	Specifies the output bin.	SDSF
OUTDISP=	Specifies the disposition of the process instance for normal or abnormal termination of the job step.	SDSF(OUTDISP) or $T O line command (NDISP=; ODISP)
PAGEDEF=	Names a library member SYSOUT data set on a page-mode printer.	SDSF
PRMODE=	Identifies the process mode required to print the SYSOUT data set.	SDSF(PRMODE) or $T O line command (PRMODE=)
PRTY=	Specifies initial priority at which the SYSOUT data set enters the output queue.	SDSF(PRTY) or $T O line command (P=)
ROOM=	Specifies a room identification to be printed on output separator pages.	SDSF
TITLE=	Identifies a report title to be printed on new separator pages.	SDSF

Table 30. Changing Output Characteristics for SYSOUT Data (continued)

Output Characteristic keyword	Purpose	How To Modify
USERLIB=	Identifies the libraries containing Advanced Function Printing (AFP) resources to be used by Print Services (PSF) when processing SYSOUT data sets.	SDSF
UCS=	Specifies universal character set, print train, or character-arrangement table for a 3800 Printing Subsystem.	SDSF(UCS=) or $T O line command (T=)
WRITER=	Names an external writer to process the SYSOUT data set rather than JES2.	SDSF(WRITER=) or $T O line command (W=)

Specify JES2 job output characteristics

The $T OUTDEF command allows you to specify the general output processing characteristics of JES2, such as whether or not the MAS configuration is to use shared broadcasting. You also specify the number of job output copies that may be requested, set the percentage of JOE usage at which you are alerted of a shortage, and set the PRTYHIGH and PRTYLOW characteristics for jobs that have not yet been selected for execution. The PRTYOUT=Y|N parameter specifies whether the priority specification (PRTY=) on the JCL OUTPUT statement is supported or not.

Note: The $T OUTDEF command does not affect output that has already been created. This also applies to the $T commands that control conditional purging described below.

You can control conditional purging of output for jobs according to the type of job.

- STCs, using the $T JOBCLASS(STC) command.
- TSUs, using the $T JOBCLASS(TSU) command.

Specify output disposition

You can specify the disposition for output data sets through the OUTDisp parameter on the following commands:

- $T JOBCLASS
- $T OUTCLASS

You can specify the following dispositions:

HOLD Hold the output. JES2 does not process the output until you either change the disposition to WRITE or KEEP, or release the output. When the output is released, the disposition changes to WRITE.

KEEP Process the output and then keep a copy of it on spool. After processing, the disposition of this output becomes LEAVE.

LEAVE
JES2 does not process the output until you change the disposition to either WRITE or KEEP, or release the output. When the output is released, the disposition changes to KEEP.

PURGE
Purge the output immediately.

WRITE
Process the output then purge it.

For each command you can specify abnormal and normal dispositions. The abnormal disposition applies when a job abends or contains a JCL error. The default is abnormal disposition.

Below you can see the output disposition changes that take place after a data set has been released and/or processed.

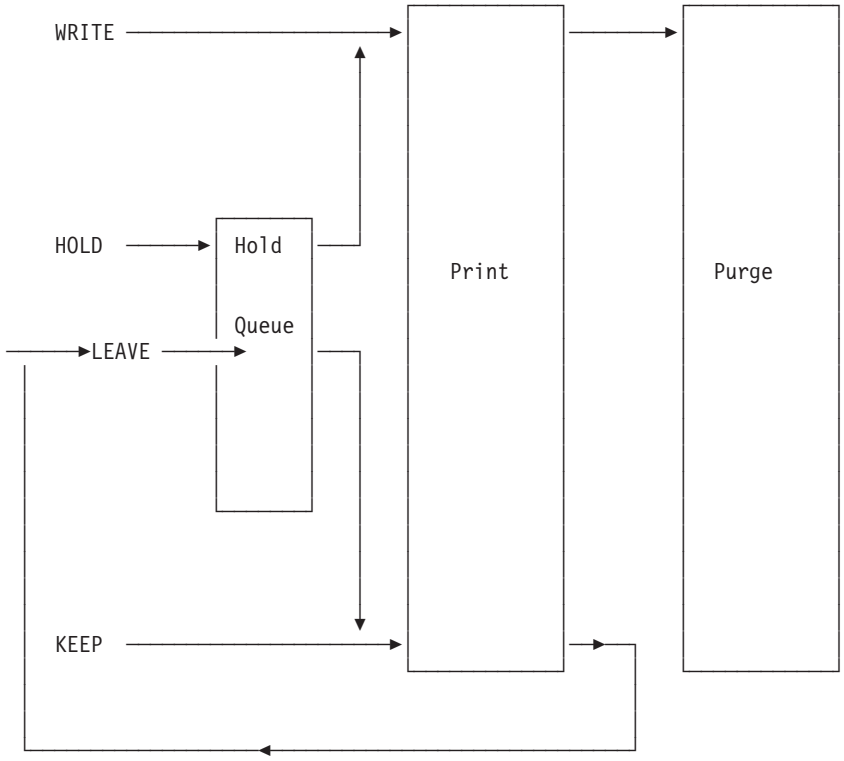

Figure 1. Specify Output Dispositions

Specify JES2 output scheduling priority in relation to output quantity

The $T OUTPRTY(n) relates scheduling to the quantity of records or pages of output. When JES2 builds JOEs for a job, it assigns a priority to each JOE based on the total number of output lines, cards, or pages represented by the JOE. The $T OUTPRTY(n) command allows you to specify page, record, and priority parameters to control output scheduling.

Note: This command does not affect post-execution jobs, nor does it affect an output data set if the PRTY= parameter was specified on the data set's OUTPUT JCL statement and PRTYOUT=YES was specified on the OUTDEF initialization statement.

Specify the default spool space utilization for job output

Use the $T ESTBYTE command to specify the default amount of spool space needed for a job's output (1-99999 bytes) and the action that JES2 takes if the output exceeds this amount. You specify the interval at which JES2 issues the $HASP375 message informing you that the amount has been exceeded and control whether the job is to continue executing or be cancelled (with or without issuing a dump).

Specify the estimated print line count for jobs

The $T ESTLNCT command allows you to specify the default print line count

(1-9999) in thousands of lines for a job's output and the action JES2 takes if the job exceeds this estimate. You receive the $HASP375 message informing you that the line count has been exceeded at the interval specified on the INT parameter. The OPT parameter allows you to control whether JES2 is to allow the job to continue executing or cancel the job and, optionally, issue a dump.

For example, specifying $T ESTLNCT,NUM=20,INT=1000,OPT=1 indicates to JES2 that, if a job that has not yet been selected for execution exceeds 20,000 print lines, JES2 should issue the $HASP375 message for every 1000 lines after 20,000 and cancel the job without issuing a dump.

Specify the estimated page count for a job's output

The $T ESTPAGE command allows you to specify the default page count (1-999999)for a job's output and the action JES2 takes if the job exceeds this estimate. You receive the $HASP375 message informing you that the page count has been exceeded at the interval specified on the INT parameter. The OPT parameter allows you to control whether JES2 is to allow the job to continue executing or cancel the job and, optionally, issue a dump.

Specify the estimated punched card output for jobs

The $T ESTPUN command allows you to specify the default number of punched cards per job (0-9999999) and the action JES2 takes if the job exceeds this estimate. You receive the $HASP375 message informing you that the page count has been exceeded at the interval specified on the INT parameter. The OPT parameter allows you to control whether JES2 is to allow the job to continue executing or cancel the job and, optionally, issue a dump.

JES2 Job Output Commands

JES2 commands allow you to display and control job output. For example, you can display the amount of output for a job or jobs in either the held or released output classes. For information about JES2 commands you can issue to display job output, see "Displaying Job Information" at the beginning of this chapter.

You can issue commands to release or cancel held output data sets. You can also cancel all or selected ready but inactive output data sets on a class and/or routing basis.

Releasing or canceling output groups

Use the $O command to release or cancel held output groups. You can control the held output of a single job, a range of jobs, specific output classes, or all output classes. Specify CANCEL to cancel held output groups; use the R= parameter to release held output groups to a specified destination.

The DAYS= and HOURS= parameters allow you to control held output according to the day and hour it was created. For example, issuing $O J1-20,DAYS>5 causes JES2 to release all held output groups that are at least 5 days old for batch jobs 1 through 20.

Canceling output data sets

To cancel a job's output, issue either the $Co Job command or the $PO Job command. You can cancel a job's output by output class (using the Q= filter), route code (using the R= filter) or output group (the OUTGRP= filter). The $HASP686 message displays information about each output group cancelled. The $HASP250 message is issued when all output for a job is deleted and the job is purged.

To speed throughput or ease the amount of work queued for a device, you can route both normal and specially routed output for a job or jobs to an alternate location. Specially routed output is independent of the normal job output, which is unaffected.

Producing a separator page

The $T PRINTDEF command allows you to specify whether JES2 produces the print separator page or the format of the print separator page through the SEPPAGE= parameter.You can suppress the separator page, print only the detail box information, print one full separator page, or print two full separator pages. For more information about this function, refer to “Control a Printer” in chapter 5.

Rerouting job output

The $R command allows you to reroute to another destination both ready and held output for batch jobs, started tasks, or TSO/E users. This command allows an operator to change the specified destination on a piece of output as often as necessary. You can issue the $R command only for output groups. You can display the destination of output groups by entering the $DO J command (destination appears on the ROUTECDE= parameter in the display).

In addition, you can use the $R command to change the command authority routing on jobs, or allow them to remain the same. Command authority allows an operator to control output disposition and display jobs.

A job’s command authority can be specified from two distinct places:

- The route code of the input device that brought the job into the system
- The remote or node specified on either the JES2 /*ROUTE PRT or the /*ROUTE PUN JES2 control statement.

You can display a job’s command authority by entering the $D Jn,LONG command; the $HASP890 message displays the CMDAUTH= parameter. If you do not code ALL,Q= or OUTDISP= with the J= or the R= parameter (in conjunction with the D= parameter) on the $R command, both the routing for that job’s output and the command authority are transferred.

For the sending node to retain the authority to change output characteristics while routing all output from one remote to another, specify the ALL,Q= parameters or OUTDisp= parameter to reroute the specified JOE (job output elements) to an alternate location. The command authority for those jobs remains unchanged. If you enter

```
$R all,r=j5,d=r7,outd=(w,h,k,l),
```

JES2 routes all eligible print and punch output from remote 5 to remote 7, but retains command authority at remote 5.

If you do not specify the OUTDisp parameter, all output with a disposition of WRITE, HOLD, KEEP, or LEAVE will be rerouted.

If output is not routed when you issue the $R command, wait a few minutes and retry the command. If your output is still not routed, contact your system programmer.

Controlling Output Groups and Job Output Elements

To optimize the use of print/punch devices, JES2, or the user, groups a job’s output data sets together based on similar output characteristics. Data sets must agree on class, destination, writer name and process mode characteristics to be grouped

together. These characteristics are called grouping characteristics. Each of these output groups is represented by a job output element (JOE), which is the smallest unit of a job's output that JES2 selects for output device processing.

An output group has three identifiers (for example, group10.1.2). The first identifier is the group id. This is a 1 to 8 character alphameric name that the user can specify in the JCL. If the user does not specify a name, JES2 will generate one. The name refers to the collection of data sets that JES2 grouped together because their grouping characteristics matched.

The second identifier distinguishes between job output elements of the same group. Job output elements may have the same group id when JES2 constructs more than one job output element for the group because class, destination, writer, and/or mode were not identical within the group, or because device setup characteristics were not identical within the group and your installation does not permit demand setup job output elements (that is, job output elements that require more than one device setup).

The third identifier is used to distinguish between copies of the same job output. Multiple copies of the same job output may result from job copies (COPIES= on the output JCL statement) or the $N command.

Qualifying the output group name with a job output element identifier allows you to address, and thus control the job output element.

JES2 commands allow you to control various aspects of the job processing cycle by addressing the data by output group name, with or without a job output element identifier. You can set the output characteristics for one or all of the job output elements in a job, or range of jobs using the $T O command. You can also display the output processing characteristics of designated output groups or individual job output elements (JOEs) using the $DO job command and cancel specific output groups or JOEs created by a job.

Chapter 4. Controlling a Network

Through network job entry (NJE), a user located at a node, or remotely attached to a node by a remote job entry (RJE) line, can use the capabilities of any other reachable node in the network. This chapter describes the JES2 commands you use to control a network. (For an overview of NJE and RJE, refer to *z/OS JES2 Initialization and Tuning Guide*.)

The following tables list the tasks discussed in this chapter and provide a cross reference to the detailed descriptions of the corresponding NJE commands.

Table 31. Specifying Node Characteristics

Task	Command	Location
Specify the JES2 network environment for message, command, and data transmission among nodes.	$T NJEDEF	"$T NJEDEF - Control JES2 Network Environment" on page 699
Display the JES2 network environment for message, command, and data transmission among nodes.	$D NJEDEF	"$D NJEDEF - Display the JES2 Network Environment" on page 311
Define a symbolic destination name	$ADD DEStid	"$ADD DESTID - Define a Symbolic Destination" on page 118
Change the route code associated with a symbolic destination name	$T DEStid	"$T DEStid - Control a JES2 Symbolic Destination" on page 624
Delete a symbolic destination name	$DEL DEStid	"$DEL DEStid - Delete a Symbolic Destination" on page 441
Display subnets and node names	$D SUBNET	"$D SUBNET - Display Subnet Connections" on page 425
Display node attributes	$D U,LINEn or $D NODE	"$D U - Display the Status of JES2-Controlled Devices" on page 434 "$D NODE(nnnn) - Display a Node's Characteristics" on page 314
Change node characteristics	$T NODE	"$T NODE(nnnn) - Set a Node's Characteristics" on page 703

© Copyright IBM Corp. 1988, 2002

Table 32. Starting BSC Node Communications

Task	Command	Location
Start an NJE line	$S LINExx	"$S LINE(nnnn) - Start a Line" on page 569
Establish an NJE connection with an adjacent node	$SN,LINExx, N=nodename	"$S N - Start Node Communication on a BSC Line" on page 573

Table 33. Starting SNA Node Communications

Task	Command	Location
Start the JES2/VTAM interface	$S LOGON(n)	"$S LOGON - Start the JES2/VTAM Interface" on page 571
Start an NJE line	$S LINExx	"$S LINE(nnnn) - Start a Line" on page 569
Start an SNA application-to-application session with another node	$S N,A=	"$S N - Start Node Communication on a SNA Line" on page 576

Table 34. Controlling the JES2/VTAM Interface

Task	Command	Location
Define the JES2/VTAM interface	$ADD LOGON(n)	"$ADD LOGON (nn) - Add a Logon" on page 130
Start the JES2/VTAM interface	$S LOGON(n)	"$S LOGON - Start the JES2/VTAM Interface" on page 571
Assign a password to the JES2/VTAM interface and diagnose SNA problems	$T LOGON(n)	"$T LOGON(n) - Control the JES2/VTAM Interface" on page 689
Stop the JES2/VTAM interface	$P LOGON(n)	"$P LOGON(nn) - Stop the JES2/VTAM Interface" on page 534
Restart the JES2/VTAM interface	$E LOGON(n)	"$E LOGON(nn) - Restart the JES2/VTAM Interface" on page 457

Table 35. Defining and Changing Applications

Task	Command	Location
Define a new JES2 application	$ADD APPL	"$ADD APPL - Define a VTAM Application to JES2" on page 113
Change an application's characteristics	$T APPL	"$T APPL - Control JES2 Applications" on page 600

Table 36. Controlling NJE Lines

Task	Command	Location
Define an NJE line	$ADD LINE(nnnn)	"$ADD LINE(nnnn) - Add Line" on page 125
Start an NJE line	$S LINE(nnnn)	"$S LINE(nnnn) - Start a Line" on page 569
Disconnect an NJE line, assign a password, or diagnose NJE line problems	$T LINE(nnnn)	"$T LINE(nnnn) - Control a Line" on page 682
Restart NJE line activity	$E LINE(nnnn)	"$E LINE(nnnn) - Restart Line Activity" on page 455
Stop an NJE line	$P LINE(nnnn)	"$P LINE(nnnn) - Stop a Line" on page 533

Table 37. Controlling NJE Static Connections

Task	Command	Location
Add static network connections	$ADD CONNECT	"$ADD CONNECT - Dynamically Add Network Connections" on page 115
Display network connections that are defined to JES2	$D CONNECT	"$D CONNECT - Display Network Connections" on page 211
Change static network connections that have been previously defined	$T CONNECT	"$T CONNect - Change Static Network Connections" on page 616
Delete static connections	$DEL CONNECT	"$DEL CONNect - Delete Network Connections" on page 439

Table 38. Controlling NJE Devices

Task	Command	Location
Start an NJE device	$S L(nnnn).JR(n) L(nnnn).JT(n) L(nnnn).SR(n) L(nnnn).ST(n)	"$S Lnnnn.xxn - Start an NJE Device" on page 567
Restart NJE device activity	$E L(nnnn).JR(n) L(nnnn).JT(n) L(nnnn).SR(n) L(nnnn).ST(n)	"$E Lnnnn.xxn - Restart NJE Device Activity" on page 453
Control work selection on an NJE device	$T L(nnnn).ST(n)	"$T L(nnnn).ST(n) - Specify Network SYSOUT Transmitter Characteristics" on page 678
Cancel NJE device activity	$C L(nnnn).JR(n) L(nnnn).JT(n) L(nnnn).SR(n) L(nnnn).ST(n)	"$C Lnnnn.xxn - Cancel NJE Device Activity" on page 174
Stop an NJE device	$P L(nnnn).JR(n) L(nnnn).JT(n) L(nnnn).SR(n) L(nnnn).ST(n)	"$P Lnnnn.xxn - Stop an NJE Device" on page 532

Table 39. Sending Messages and Commands Through the Network

Task	Command	Location
Send messages through the network	$D M	"$D M - Send a Message" on page 284
Send commands to another MAS member	$M n	"$Mnn - Send Commands to Other MAS Members" on page 511
Send commands to another RJE node	$N n	"$Nnnnn - Send Commands through the Network" on page 512
Display information about a job at another node	$G D	"$G D - Display Job Information for a Job at Another Node" on page 474

Controlling the NJE Environment

You define nodes to a network through the NJEDEF and the NODE initialization statements. Use the NJEDEF statement to define your own node characteristics, and the NODE statement to define other nodes. JES2 provides $T commands to modify some of the parameters on these initialization statements.

You can use symbolic destination names to reference nodes, remote workstations, and local devices or workstations and devices attached to a network node. The $ADD DEStid command allows you to dynamically define a symbolic destination name for a node, workstation, or device. You can use the $T DEStid to change a symbolic destination name.

Once you have defined nodes to the network, you can start node communications using binary synchronous communication (BSC) lines or through VTAM, which maintains the connection information for SNA NJE application-to-application sessions. You start the two types of connections using different JES2 commands. (For an overview of connecting the network through BSC lines and establishing an SNA session through VTAM, see *z/OS JES2 Initialization and Tuning Guide*.)

JES2 allows you to control the VTAM interface for SNA sessions and define new applications dynamically to VTAM. You can also set SNA remote terminals to automatically connect and disconnect. (For a description of controlling remote terminals, see “Remote Job Entry”.)

You can control NJE lines and devices using the same JES2 commands, regardless of how the NJE connection was established. JES2 also provides networking commands you can use to send requests to any other node in the network. (For a list of all JES2 commands and their RJE restrictions in an NJE environment, see “Remote Entry Restrictions”.)

Specifying Node Characteristics

This section describes the commands you can issue to specify node characteristics. It includes information about dynamically defining a destination name for a node, displaying node attributes, and setting node command authority. All these values have been set through the JES2 initialization stream. These commands should be used only after you contact your system programmer.

Modifying Transmission Delays and Excessive Looping Through a Network

Use the $T NJEDEF command to modify the specified delay interval for message and command transmission, the range of sign on time between the local and adjacent nodes, and the maximum number of nodes a job or output can cross.

The DELAY=nnn parameter enables JES2 to attempt to remedy a lockout condition by clearing transmission congestion between nodes. It specifies the number of seconds that a message or command will be delayed in any stage of transmission between nodes before the system assumes that a lockout condition exists.

The MAXHOP=nnnn parameter specifies the maximum number of nodes a job or output can cross to reach a destination. JES2 issues the $HASP528 message when a job exceeds this limit. If you receive this message, your MAXHOP value may be set too low or your net may be in a loop.

Modifying Sign-on Tolerance

The TIMETOL=nnnn parameter specifies the difference between the time-of-day (TOD) clocks of this node and any adjacent node at signon. JES2 checks this value when the adjacent node attempts to sign on to your NJE network. Any adjacent node whose value is above or below the TIMETOL value is rejected by JES2. Nodes that had signed on under an earlier TIMETOL value are not disconnected by this command.

Defining a Symbolic Destination Name

Use the $ADD DEStid command to dynamically define a symbolic destination name for a node, workstation, or device. The DEST= parameter specifies the route code (destination) you want to associate with the DEStid name. When you dynamically define a JES2 symbolic destination, it is carried across a hot start of JES2 only. To permanently define the symbolic destination, add a new DEStid initialization statement before restarting JES2.

Changing the destination associated with a DEStid

Use the $T DEStid command to change the route code (destination) name associated with a specific or generic DEStid. The DEST= parameter specifies the destination you wish to change.

Note: You cannot alter a DEStid whose status is the node name. (Use the $D DEStid command to determine the status of a DEStid.) Change the node name first (to make it inactive) using the $T NODE command, then issue the $T DEStid command.

Deleting a Symbolic Destination Name

Use the $DEL DEStid command to delete a symbolic destination (destid). Note that when you dynamically delete a destid, JES2 honors the deletion across a restart only if you perform a hot start. To permanently delete the symbolic destination, remove the DEStid initialization statement before restarting JES2.

Displaying Subnets and their Paths Across a Network

Use the $D SUBNET command to display the subnet connections defined to JES2. A subnet is any subset of a network identified to an installation by the eight-character 'SUBNET' name on the JES2 NODE initialization statement. Generally, the nodes in a subnet are physically close and perform a similar function. If you have access to one node within a subnet, JES2 assumes you have access to them all.

You could enter a **$D SUBNET(*)** to display all the subnets within the network.

```
$HASP816       SUBNET (A)     N1,N2
$HASP816       SUBNET (B)     N3,N4
$HASP816       SUBNET (C)     N5,N6
```

JES2 shows each node on each subnet.

The $D SUBNET shows what nodes are located within a particular subnet. The $D PATH command provides the installation's view of the path to a particular node and the resistance level of that path. The resistance indicates how likely an installation is to use a path. In all instances, the path manager chooses the path of least resistance.

When the $D SUBNET command is used in conjunction with the $D PATH command, it provides a powerful diagnostic tool. To determine network connectivity to remote node 6, an operator enters a **$D PATH(6)** and receives the following console display:

```
$HASP231  PATH(N6)      STATUS=(through LINE 7),REST=20,
$HASP231                PATH=(N1,N2,N3...N4,N5...N6)
```

JES2 shows that LINE 7 is the conduit that connects local node 1 to target node 6. The resistance is 20 and the actual path travels from node N1 to N6. The comma

between nodes indicate a direct path from one node to the other, while the ellipsis (...) indicates that N3 to N4 and N5 to N6 involve travel through subnets.

In complex network configurations, these commands can help users determine why a path link is not receiving information and how to resend jobs across a network to reduce processing bottlenecks. For more information about networking, refer to *z/OS JES2 Initialization and Tuning Guide*.

Displaying Node Attributes

Each system in the network has a node information table,which contains an entry for every node (up to 32767) capable of being attached to the network. You can display the following information from this table using the $D U,LINEn and $D NODE commands as indicated:

- Node number and node name (use $D NODE)
- Password status (whether or not the node requires a password when signing on -- use either command)
- Connected/unconnected status (whether the node is reachable); if connected, the name of the locally attached NJE line used to begin transmission to this node (use either command)
- Command authority for any commands originating from this node (use $D NODE)
- A list of the active (not drained) JES2 transmitting and receiving devices that exist (or are allowed to exist) for all NJE lines directly attached to this node. (use $D U,LNES)

Setting Node Attributes

Use the $T NODE command to change node characteristics for nodes other than your own. The AUTH= parameter specifies the types of commands that the indicated node has authority to issue to the local node. You can also specify a password on the PASSWORD= parameter that will be used to verify the identity of the indicated node during an NJE connection. The following describes these parameters in further detail. (For a description of all $T NODE command parameters, see the command description in “Chapter 5. Command Reference Section”.)

Setting Node Command Authority

The $T NODE(nnnn),$AUTH= command sets the command authority to be attributed to all commands originating at a specific node. (System authority is required to use this command.) Use any combination of the following authority codes:

- NET - network command authority
- JOB - job command authority
- DEV - device command authority
- SYS - system command authority

System, job, or device authority is required, in addition to network authority, to have commands take effect at another node.

Note: In a MAS configuration, you should enter the $T NODE(nnnn), $AUTH= command on each member of the node because each member maintains its own version of the node information table.

Setting Node Password

Use the $T NODE(nnnn) command to assign or delete a password for a node. Both PASSWORD=xxxxxxxx and PASSWORD=(SEND=xxxxxxxx,VERIFY=xxxxxxxx) specify the password used to verify the identity of the node during an NJE connection.

Note: Be certain to make a note of the password you assign because there is no facility for displaying the passwords in effect.

Starting NJE Communications

NJE communications can be started over a BSC line or using SNA/VTAM. You start NJE communications differently depending on which method your installation uses. Controlling NJE lines and devices is the same (except where noted) once NJE communication has been established.

This section describes starting node communication on a BSC line and starting node communication using SNA/VTAM.

Starting Node Communication on a BSC Line

To start node communication on a BSC line:

1. Enter the $S LINE(nnnn) command to start the specified NJE line(s), this is not required when the line(s) are specified on the NODE initialization statement.
2. Enter the $S N,LINEnnnn command or the $SN,N=nodename command to establish an NJE connection with an adjacent node by identifying the started BSC line upon which this system is to try to establish an NJE connection.

The system will try to sign on to whatever system is at the other end of the specified line by sending an NJE sign-on record over the line. The command will be ignored if the line is currently signed on for RJE or NJE activity.

Note: Before starting networking on a line, it is necessary that the line be started from both nodes using the $S LINE(nnnn) command. This is not required when the line(s) are specified on the NODE initialization statement.

The $S N,LINEnnnn command also allows you to specify a node password (up to 8 alphameric characters) that is to be transmitted in the sign-on record resulting from this command. If the password is omitted, the node password contained in the node information table entry for the local node is used. Each side of the connection must assign the same password for the line used in the connection. For information about establishing a BSC network connection, see *z/OS JES2 Initialization and Tuning Reference*.

If the $S N command is unsuccessful, do the following:

1. Enter a $D U command to ensure that the BSC line is started.
   - If it is not started, issue a $S LINE(nnnn) command.
2. If the line is active, issue a $E LINE(nnnn) command to stop the current activity.
3. Reissue the $S N command.

If this also fails (having been attempted from both nodes, if necessary), then:

1. Drain the line from both nodes using a $P LINE(nnnn) command followed by a $E LINE(nnnn) command.
2. Start the line from both nodes with a $S LINE(nnnn) command. (If a dial-up line is used, you will have to re-dial after issuing the $S LINE(nnnn) command.)

3. Enter the $S N command from one of the nodes.

When you wish to stop an NJE line after it completes its current activity, issue the $P LINE(nnnn) command.

Starting Node Communication Using SNA/VTAM

To start node communication using SNA/VTAM:

1. Enter the MVS commands necessary to start VTAM (S VTAM and VTAM VARY)
2. Enter the $S LOGON(n) command to start the JES2/VTAM interface
3. Enter the $S LINE(nnnn) to start the specified NJE line(s)
4. Enter the $S N command to start a session with another node, specifying the name of the application with which the session is started on the A= parameter.

The following describes each of these commands in more detail:

Starting VTAM

The MVS S VTAM command starts the network controllers or communication linksneeded to establish a path to the remote workstation and the physical unit. The MVS VTAM VARY command activates the logical unit associated with the workstation. This activation can also be accomplished by an automatic activation specified inthe VTAM network definition.

For information about starting VTAM and activating the network, refer to *z/OS Communications Server: SNA Operation*.

Starting the JES2/VTAM interface

Issuing the $S LOGON(n) command allows JES2 to begin processing connection requests from SNA remote workstations. Use the value of n specified in the LOGON(n) initialization parameter for the interface to be started.

Starting the specified NJE line(s)

Use the $S LINE(nnnn) command to start the specified NJE line(s). You must know how the systemprogrammer defined your NJE network in the JES2 initialization procedure; that is, you must know which workstations can use which lines. Ask your system programmer for this information.

Note: JES2 cannot be withdrawn from the system until all lines are drained.

Starting an SNA session

The $S N,A= command starts an SNA application-to-application session with another node. The optional LINE(nnnn) parameter identifies the started logical line to be used for the session. The physical SDLC line(s) involved will be managed by VTAM and the Network Control Program (NCP). If you do not identify the line to be used, an SNA logical line will be selected from a pool of available, idle SNA logical lines. At least one SNA line must be available to establish an SNA session. If you specify a currently-used or drained line, the command is rejected.

Use the A= parameter to provide the name of the application with which an SNA application-to-application session is to be started. This application name corresponds to the APPLID= value on the LOGON(nnn) initialization statement at the node with which a session is desired.

If a node consists of more than one member, each member of that node must be uniquely defined as an application to VTAM and the application names used must be defined to JES2 with APPL initialization statements. APPL initialization statements must be supplied at every node in the network that may initiate SNA sessions with these applications.

Controlling the JES2/VTAM Interface

You use the $S LOGON(n) command to start the JES2/VTAM interface, as previously described in “Starting Node Communication Using SNA/VTAM”. JES2 allows you to assign a password and ID to the JES2/VTAM interface and monitor the interface activity. You can also stop and restart the interface. The following describes the commands you issue to perform these functions:

Assigning a password and ID to the JES2/VTAM interface

Use the $T LOGON(n) command to assign a password and an application ID to the JES2/VTAM interface. You must be certain to make note of the password assigned because there is no facility for displaying the password in effect. This command requires system authority.

Note: The password and application ID assigned to the JES2/VTAM interface must also be defined to VTAM. For VTAM interface information, refer to *z/OS Communications Server: SNA Migration*.

Monitoring the JES2/VTAM interface

You can also use the $T LOGON(n) command to record SNA events on the master console as an aid in diagnosing SNA problems. These events can also be traced. This command requires system authority.

Note: When the JES2/VTAM interface is monitored, activity on all SNA lines is monitored.

Stopping the JES2/VTAM interface

For SNA remote workstations, use the $P LOGON(n) command to stop the JES2/VTAM interface. When you issue this command, all logon requests are rejected. Sessions that are already established are allowed to finish normally. Use the value of n specified in the LOGON(n) initialization parameter that defines the interface to be stopped.

Restarting the JES2/VTAM interface

Use the $E LOGON(n) command to stop and restart the JES2/VTAM interface on a logical line. Use the value of n as defined in the LOGONn initialization parameter for the interface to be restarted. When you issue this command, data currently being transmitted immediately stops, and the partial input is purged. Any output being transmitted is placed on the output queue. When data is transmitted again, the output is transmitted from the point where it was stopped.

Defining and Changing Applications

You can dynamically define JES2 as an application to VTAM and change the characteristics of JES2 applications in the following ways:

Defining a new JES2 application

Use the $ADD APPL to dynamically define JES2 as an application to VTAM at a specified JES2 node. You identify the application name by which JES2 is known to VTAM at the indicated node (NODE=nnnn). The NODE=nnnn initialization statement that defines the node indicated on the $ADD APPL command *must* specify the SNA parameter. You can also specify a compaction table number and a resistance rating of the connection.

Note: When you dynamically define JES2 as an application to VTAM, its specifications are not checkpointed and are not carried across a restart of JES2. If you want to permanently define the new application, you must add a new APPL initialization statement before restarting JES2.

Changing an application's characteristics

Use the $T APPL command to specify the characteristics of one or more JES2 applications. You specify the application name, compaction table number, the node at which JES2 is defined as an application to VTAM, and the resistance rating of the connection. (For information about selecting resistance values, see *z/OS JES2 Initialization and Tuning Reference*.)

Note: If the application is active, you cannot change the specifications.

Controlling NJE Lines

This section describes the JES2 commands for controlling NJE lines. Many of the commands you issue to control NJE activity are used for controlling remote job entry (RJE) lines as well. For information about controlling the RJE environment, see the "Remote Job Entry" section in "Chapter 2. Controlling JES2 Devices and Functional Subsystems". (For a discussion of the RJE and NJE facilities, see *z/OS JES2 Initialization and Tuning Reference*.)

Starting a line

To start an NJE line for an SNA remote workstation, you must know how the system programmer defined your NJE network in the JES2 initialization procedure; that is, you must know which workstations can use which lines. Ask the system programmer for this information.

Issue the $S LINE(nnnn) command to start an NJE line. This activates a line to VTAM for the SNA NJE station, allowing JES2 to begin processing logon requests from remote stations. Use the $S RMT(nnnn) command to cause a remote terminal to logon automatically if you have placed the terminal in automatic logon mode by previously issuing the $T RMT(nnnn) command. (For a description of controlling remote terminals, see "Remote Job Entry" in "Chapter 2. Controlling JES2 Devices and Functional Subsystems".)

Assigning a password to a line

Use the $T LINE(nnnn) command to assign or delete a password for a line. You must be certain to make a note of those passwords assigned because there is no facility for displaying the passwords in effect. Assigning and deleting passwords requires system authority. (Use the $T NODE(nnnn),$AUTH= command to set node command authority.)

Diagnosing line problems

Use the $T LINE(nnnn) command when you suspect there is a problem on a line. For BSC lines, this command causes the system to issue a diagnostic message on the console with master level authority every time a channel end is detected on the specified line. For SNA lines, this command causes the system to issue a diagnostic message on the console with master level authority for each event detected on the specified line. This command requires system authority and should be used only at the direction of your system programmer. In addition, you can trace I/O activity on a line using this command.

Restarting line activity

Use the $E LINE(nnnn) command to stop the current activity on an NJE line. Any input currently being transmitted over the specified line will immediately stop, and the partial input will be purged. Any output being transmitted over the line will be placed on the hardcopy queue.

The NJE node or JES2 remote workstation currently signed on to the restarted line is disconnected. If the line status was active, new JES2 remote workstations can sign on to the line or it can be used for networking. If the line

status was draining, it becomes drained and unusable for JES2 I/O until the operator starts it again. For an NJE line, $E LINE(nnnn) stops attempts to sign on to another node.

Note: If the line status remains draining because of an I/O device missing an interrupt, a second $E LINE(nnnn) command is required to restart the line.

Disconnecting a line

You can disconnect an NJE line immediately using the $T LINE(nnnn),DISCON=I command or when all data set communications over the line cease (DISCON=Q). When the line is disconnected immediately, a sign-off record is sent to a multi-leaving remote workstation or to the connected NJE node. When the line is disconnected after communications cease, the disconnection occurs as though the remote operator or NJE node had signed off.

Stopping a line

Use the $P LINE(nnnn) command to stop an NJE line. The specified line will not start any new activity and will stop upon completion of its current activity.

Controlling NJE Static Connections

This section describes the JES2 commands for controlling NJE static connections. Static connections applies to all connections created through a JES2 CONNECT initialization statement or a $ADD command; the system presumes the connections are logically static and will not end. For the following four commands, you can use symbolic names to specify the nodes involved in a connection through the NODEA= and NODEB= parameters.

Adding network connections

To add static network connections, you must know how your NJE network in the JES2 initialization procedure is defined; that is, you must know which nodes can use which lines.

Enter the $ADD CONNECT command to dynamically add network connections. (For a description of controlling remote terminals, see “Remote Job Entry” in “Chapter 2. Controlling JES2 Devices and Functional Subsystems.”)

Changing static network connections

Enter the $T CONNECT command to dynamically change previously defined network path connections. Through this command you can change only static connections: those defined by a CONNECT initialization statement or established by the $ADD CONNECT command. However, you cannot use this command to change the NODE and MEMBER attributes of new connections. (Change NODE and MEMBER by using the $DEL CONNECT command to delete the existing connection and the $ADD CONNECT command to add the required connection.)

Displaying network connections

Enter the $D CONNECT command to display network path connections defined to JES2. The $D CONNECT displays both static and non-static (connection records received from other nodes) connections.

Deleting network connections

Enter the $DEL CONNECT command to delete static path connections. Through this command you can delete only static connections: those defined by a CONNECT initialization statement or established by the $ADD CONNECT command.

Controlling JES2 Transmitting and Receiving Devices

JES2 allows you to start, restart, cancel, or stop NJE device activity. All commands allow you to specify the job receivers, job transmitters, SYSOUT receivers, and SYSOUT transmitters to be acted upon.

Starting an NJE device

Use the $S L(nnnn).xx(n) command to start one or more currently drained transmitting or receiving devices. A transmitter will drain if it attempts to send a unit of work to a receiving node that has any of the following:

1. The corresponding receiver drained
2. The corresponding receiving function drained
3. No corresponding receiver

To activate the receiving function, the operator at the receiving end (except for case 3) should start the function ($T NODE,RECEIVE=) or receiver ($S) before the operator at the transmitting end attempts to start the transmitter.

Restarting an NJE device

Use the $E L(nnnn).xx(n) command to stop the current transmission or receipt of a job or SYSOUT data over an NJE line and requeue the data for the transmission at the appropriate node.

Controlling Work Selection on an NJE Device

You can specify the work selection characteristics of a SYSOUT transmitter by issuing the $T L(nnnn).ST(n),WS= command. Work selection can specify the size of the SYSOUT data set, in lines and pages, that is used to determine what the transmitter will select. If you are uncertain of the characteristics in effect, you can display the characteristics for a particular SYSOUT transmitter by issuing the $D L(nnnn).ST(n) command.

Canceling an NJE device

Use the $C L(nnnn).xx(n) command to cancel a job or SYSOUT data currently being received or transmitted over an NJE line.

Note: Canceling a receiver does not stop the actual transmission of data. The operator at the receiving node can elect to cancel job or SYSOUT reception by having the operator at the transmitting end cancel the transmitter.

Stopping an NJE device

Use the $P L(nnnn).xx(n) command to stop the specified NJE transmitting or receiving devices after they complete their current work. When a specified device has been drained, JES2 issues the $HASP097 device IS DRAINED message.

Sending Messages and Commands Through the Network

Use the $D M command to send a *message* to a remote workstation operator, a console operator on another multi-access spool member, or to a console or remote workstation operator at another node.

To send a *command* through the network to an indicated system, use the $M n command (for communication between MAS members) or the $N n command (for communication between NJE node members). Identify the node and, optionally, the specific MAS member of that node to which the command text is to be sent. Both commands allow you to specify:

- The MAS member and the node (by number or installation-defined name) to which the command text is to be sent.
- The area and console identifier of the active MCS console at which the response to the command is to appear.

A command authority check is performed on all JES2 commands received from another node. The command authority defined for the sending node in the receiving node's node information table is used as the authority to govern all JES2 commands received from that node. Commands are ignored if the required authority is lacking. If the sending node is not defined as having network authority, job-related commands are processed to the extent in which they affect jobs in the system owned by the sending node. A node is considered to own a job if the job originated at that node or if the job's default print and/or punch output is for that node. (Use the $T NODE(nnnn),$AUTH= command to set node command authority.)

If the command is not a JES2 command, the receiving JES2 passes the text to the operating system for processing (providing the sending node has network and system authority); however, no attempt is made to return MVS responses.

Displaying and Controlling Jobs at Other Nodes

JES2 provides networking commands ($G or "global" commands), which are those capable of being sent to any node within a network (except the node of entry). These are sent as formatted control blocks so they can be understood by any subsystem type, whereas commands sent using the $N command must be in the syntax of the target subsystem. For more information, see *NJE with JES2 and Other Systems.*

Global commands request that some type of action be taken for a specific job at another node. If a command is entered from a remote workstation, it will result in a "job not found" response unless the job's default print and/or punch output is for that workstation. Even a command entered from the system console will result in a "job not found" response if the job did not originate at or have default print and/or punch output for that node (unless the destination node has the sending node flagged as having network authority). (Use the $T NODE(nnnn),$AUTH= command to set node command authority.)

Use the $G D display command to obtain job information for a specified job at another node. The information returned from the other node contains the job number assigned to the job by the node at which the job was first introduced to the network.

The target node for the display command must be currently connected to the network. If the node name is omitted, the command is treated as a locate command and is sent to all reachable nodes in the network and each node will respond individually to the command.

Besides displaying information about a job at another node, you may hold and release a job, cancel a job, or request another node to route job output or to route a job for execution. For information about using these commands, see "Controlling Jobs at Another Node" in "Chapter 3. Controlling Jobs and Output".

Chapter 5. Command Reference Section

Command Reference Section

This chapter describes all JES2 commands in alphabetical order. Each command description contains the following parts:

- Function
- Syntax
- Parameters
- Authority Required
- Processing Considerations (if applicable)
- Messages
- Examples

For information about filtering, see “Using filtering to control and display information” on page 99.

Command Syntax Conventions

The command syntax used in this publication involves lowercase characters that have special meanings. For example, the characters v, x, and n in $S Ivvvv[-vvvv] and $E Lnnnn.xxn mean that you may code values for these characters according to the rules depicted in Table 40.

Table 40. Command Syntax Character Meanings

Character	Meaning
a	Alphabetic (A-Z)
c	All EBCDIC characters except **( ) - =,**
n	Numeric (0-9)
m	Numeric (0-9)
h	Hexadecimal (0-9 and A-F)
j	Alphabetic (A-Z) and the special characters $ # @
v	Alphabetic (A-Z) and numeric (0-9)
x	Alphabetic (A-Z), numeric (0-9), and the special characters $ # @

When entering JES2 operator commands, follow the syntax rules in Table 41, unless specifically indicated otherwise. *z/OS JES2 Commands Summary* contains a summary of the syntax of each command and its operands.

Table 41. Command Syntax Conventions

		Example	
Notation	**Description**	**Book Syntax**	**Sample Entry**
$	The command is a JES2 command. Enter the **$** command identifier as shown. (See notes below.)	$S Ivvvv[-vvvv]	$S I3-7
Apostrophes (also referred to as single quotes)	Must be entered as shown.	$D MRn[-n],‘message’	$D MR2-33, ‘OK’
Brackets	Enter all, some, or none of the enclosed parameters in any order. **Do not enter the brackets**	$S I[vvvv[-vvvv]]	$S I3

© Copyright IBM Corp. 1988, 2002

Table 41. Command Syntax Conventions (continued)

Ellipsis (...)	The parameter can be repeated. **You cannot enter both unit record and teleprocessing (tp) devices on the same command**. Do not enter the ellipsis.	$Z PRTnnnn[,PRTnnnn]...	$Z PRT2,PRT3,PRT4
Lower case	A parameter must be substituted. You can enter the parameter in either uppercase or lowercase.	$T LNEn,P=[password]	$T LNE4,P=SECRET or $t lne4,p=secret
Parentheses	Must be entered as shown if more than one value is specified.	$T PRT3,V=(volume, [,volume]...)	$T PRT3,V=(v1,v2)
Single quotes (see Apostrophe)	Must be entered as shown.	$D MRn[-n],‘message’	$D MR2-33, ‘OK’
Items in braces-stacked or denoted by an OR symbol (|)	*One* and only *one* of the parameters must be entered unless otherwise noted. **Do not enter the braces or the OR symbol**.	$D {Jn|Sn|Tn} or $D {Jn } {Sn } {Tn }	$D J100
Underscore	The underscored parameter is the system default. If you do not enter any of the parameters, the system will supply the underscored parameter.	$D A [{,**JOB**|,STC|,TSU}]	$D A,STC
Uppercase	The parameter must be spelled as shown. You can enter the parameter in either uppercase or lowercase.	$C A	$C A or $c a

Notes:

1. Because your installation establishes the JES2 command identifier, it may be some character other than $. If your installation’s command identifier is not specified in your initialization stream by CONCHAR= parameter on the CONDEF statement, the $ is the default.This publication shows the format of a command entered through any console. A command entered through a card reader has a /* (slash asterisk) in card columns 1 and 2 preceding the command identifier.
2. The system recognizes the following hexadecimal representations of the U.S. National characters; @ as X'7C'; $ as X'5B'; and # as X'7B'. In countries other than the U.S., the U.S. National characters represented on terminal keyboards might generate a different hexadecimal representation and cause an error. For example, in some countries the $ character may generate a X'4A'.

This publication uses the full syntax for the LINE and LOGON commands. JES2 accepts LNE for LINE and LGN for LOGON if you prefer to use the shorter syntax for these commands.

This publication may use **sysid** to denote “system identifier or member name”.Likewise, **jobid** denotes “job identifier”. A job identifier is the type of job (JOB, TSU, or STC) followed by the job number.

Specifications

Specifying JES2 initialization statements and commands involves using numeric values, alphabetic values, uppercase or lowercase characters, or blanks.

- You must code written uppercase operands as they appear in the syntax diagrams. Also, punctuation such as commas, parentheses, and single quotes are not metasymbols; if present in the syntax diagrams they **must** be coded. Parameters shown in lowercase are **not** to be coded as written; they denote variables that are explained in the description of the particular parameter for the initialization statement or command.
- You must code numbers and uppercase letters exactly as shown.
- You must substitute specific information or specific values for lowercase letters, which represent variables.
- You can use blanks anywhere within an initialization statement or command, but you need not use any blanks.

Command Syntax

JES2 command input processing requires that you use the following set of syntax rules. JES2 performs syntax checking for commands. While syntax is strictly checked to ensure that JES2 performs only those actions that the operator intends to effect, note that some commands may ignore additional characters following an alphabetic operand (for example, if you enter $NAD3JESZ,'$CJ2457' instead of $N,D=AD3JESZ,'$CJ2457'.)

- **JES2 Command Identifier**

  JES2 commands must begin with a character that identifies the command as one that is processed by JES2. This character, the command identifier, is a dollar sign ($) by default. You can redefine the identifier to another character by using the CONCHAR= parameter on the CONDEF initialization statement. (Refer to *z/OS JES2 Initialization and Tuning Reference* for specifying CONCHAR=.)
- **Case**

  Use uppercase or lowercase to enter a command.
- **Blanks**

  You can use blanks anywhere within a command. For example:

```
$s lne4            /*  VALID USE OF BLANKS          */

$ s  l    n e 4     /*  ALSO VALID USE OF BLANKS     */
```

  During command processing, JES2 removes all blanks within commands. Therefore, to JES2, both examples of the start line 4 command shown above are equivalent to $SLNE4. (To prevent blanks in text strings from being deleted, enclose the text strings in apostrophes. See the $DM example below.)
- **Maximum Command Length**

  The maximum length for a command depends on where the command originates, as follows:
  – Console - 120 characters
  – Card reader - 70 characters
- **Maximum Operands**

  The maximum number of operands varies with each command but cannot exceed 20.
- **Apostrophes**

  If you require an apostrophe within a text string, enclose the text string in apostrophes and enter two apostrophes where you want an apostrophe to appear. For example:

```
$d mr1, 'your job's done'     /* USE 2 APOSTROPHES IN TEXT */
```

Sharing JES2 Commands by Using System Symbols

JES2 allows two or more members of a multi-access spool (MAS) configuration to share commands while retaining unique values in those commands. A single command can affect multiple, unique entities on different JES2 members, allowing you to view a MAS as a *single image* with one point of control.

System symbols represent unique values in shared commands. Each member defines its own values to system symbols. When shared commands are processed, each member replaces the system symbols with its own values.

Before you use system symbols in JES2 commands, you must understand the types of system symbols, the elements that comprise them, and the general rules for using them. See *z/OS MVS Initialization and Tuning Reference* for details about planning to use system symbols.

Displaying Static System Symbols

You can enter the MVS DISPLAY SYMBOLS command to display the static system symbols and associated substitution texts that are in effect for a member, and determine the system symbols you can specify in JES2 commands. See the description of DISPLAY SYMBOLS in *z/OS MVS System Commands*.

Rules and Recommendations for Using System Symbols: The general rules and recommendations for using system symbols (which are described in *z/OS MVS Initialization and Tuning Reference*) also apply to JES2 commands. The following are exceptions to those general rules and recommendations:

- ***Use at least one blank:***

  When you enter a JES2 command that contains system symbols, you must code at least one blank or comma before the first system symbol occurs. Otherwise symbolic substitution does not occur for the system symbols in the command.

  For example, symbolic substitution occurs in the following command, which specifies a VTAM application identifier of **jes**, because a blank appears after the **$e** character string and before the &SYSNAME system symbol:

  ```
  $e logon(1),a=jes&SYSNAME.
  ```

  If the command is routed to two systems named SYS1 and SYS2, the following are the results of symbolic substitution:

  ```
  $e logon(1),a=JESSYS1     /* Command entered on system SYS1  */
  $e logon(1),a=JESSYS2     /* Command entered on system SYS2  */
  ```

  However, symbolic substitution does not occur for the following valid command, which does not include a blank or comma before the &SYSNAME system symbol:

  ```
  $DJ'&SYSNAME.'  /* Substitution does not occur for &SYSNAME! */
  ```

- ***Use the MVS ROUTE command to route a command:***

  If you want to route a command on one member to be processed on another member in a MAS, use the MVS ROUTE command instead of the JES2 $M command. For details on how to use the ROUTE command, see the description of ROUTE in *z/OS MVS System Commands*.

- ***Use double ampersands with the $N command:***

If you use the $N command to route a command to another node in a network, or if you enter a command from a workstation that is attached to an RJE line, use *double ampersand (&&) notation* to cause substitution to occur on the receiving node.

For example, to enter a single JES2 command from another node in a network to specify unique offload data set names for three local members of a MAS(SYS1, SYS2, and SYS3), enter the following command from the remote node:

```
$N,D=targetnode,'$t offload1,dsn=&&sysname..offload'
```

When the command reaches the target node, JES2 substitutes text for &SYSNAME as follows:

```
SYS1.OFFLOAD on system SYS1
SYS2.OFFLOAD on system SYS2
SYS3.OFFLOAD on system SYS3
```

For more information about using double ampersand notation, see *z/OS MVS Initialization and Tuning Reference*.

- ***Restrictions:***
- For lower releases of JES2, do not send JES2 commands that contain system symbols to members that are below the JES SP 5.2 level. Those members cannot substitute text for system symbols in JES2 commands.
- JES2 commands containing system symbols, which enter the system through card readers, are not translated.

Using System Symbols As Application Identifiers

Use the following examples as guides when specifying system symbols in JES2 commands for application identifiers.

In the JES2 network environment, each job entry subsystem must have a unique name defined to VTAM. When you need to define several instances of JES2 as VTAM applications, you can enter a single command to define a unique name to each instance. For example, you can establish the following naming convention for the application names:

```
JES&SYSNAME.
```

If you enter the following command:

```
ROUTE *ALL $t logon(1),p=,a=jes&SYSNAME.
```

For a sysplex that contains three MVS systems names SYS1, SYS2, and SYS3, the following commands are entered on each system:

```
$t logon(1),p=,a=jessys1  /* Define appl jessys1 on system SYS1 */
$t logon(1),p=,a=jessys2  /* Define appl jessys2 on system SYS1 */
$t logon(1),p=,a=jessys3  /* Define appl jessys3 on system SYS2 */
```

Because the application names follow a naming convention, you can enter subsequent commands to affect some or all of the JES2 instances identified by application names. For example, to stop JES2 and restart all the JES2/VTAM interfaces in the sysplex, enter the following command:

```
ROUTE *ALL $e logon(1),a=jes&SYSNAME.
```

The commands entered on each system are:

```
$e logon(1),a=jessys1  /* Restart appl jessys1 on system SYS1 */
$e logon(1),a=jessys2  /* Restart appl jessys2 on system SYS1 */
$e logon(1),a=jessys3  /* Restart appl jessys3 on system SYS2 */
```

Note that the use of system symbols allows you to enter one command to restart applications with different names on different systems.

Entering Multiple Commands on One Line

Both JES2 and MVS support the use of a delimiter character to enter more than one command on a single input line. JES2 uses a semicolon to delimit multiple lines. MVS uses the character specified by the CMDDELIM parameter in the CONSOLXX member of SYS1.PARMLIB.

Following are guidelines and examples for using JES2 and MVS delimiters:

1. If you use the JES2 delimiter, separate the commands by a semicolon. Only the first command is prefixed by the $-sign (or the character you specified in CONDEF CONCHAR initialization parameter). You can only use the JES2 command delimiter (;) if MVS does NOT use the same character for CMDDELIM.

   Note: The JES2 command cannot be used with JES2 monitor commands (commands that start with $J).

   For example, you can use the JES2 delimiter between JES2 commands:

```
$da;du;dn,all
```

2. If you use the MVS command delimiter (CMDDELIM), you can enter multiple JES2 or MVS commands on a single input line, but each JES2 command must begin with a $-sign (or the CONDEF CONCHAR initialization parameter character).

   For example, if you specified the MVS delimiter CMDDELIM(″):

```
$da"$du"$dn,all
```

   If you specified the MVS delimiter CMDDELIM(]):

```
$da]$du]$dn,all
```

   You can even mix JES2 and MVS commands on the same line:

```
$da]$du]d a,all
```

3. You can use both the MVS delimiter and the JES2 delimiter to enter JES2 and MVS commands on the same line:

```
$da;du]d a,all
```

If you enter multiple commands on one line, do not exceed the maximum number of characters - (console - 120, card reader - 70).

Routing JES2 Command Responses

Because JES2 permits the entry of multiple commands on one line, you can enter the L= parameter to route command responses for:

- A single command
- All commands
- Certain commands to specified active MCS consoles and the remaining responses to an alternate active MCS console.

Note: If you use the L= parameter or any of the REDIRect commands to redirect output to any out-of-line area, the output is issued as a multi-line WTO (write to operator) response to the specified area. The first line is the $HASP636 control line.

To route command responses for a single command, enter the L= parameter as an operand of the command.

For example:

```
$d j1-5,l=12b;ds1-5;dt1-5
```

JES2 routes the job information to display area B of console 12 while routing remaining commands' responses to the default console.

To route command responses for all commands, enter a semicolon and the L= parameter after the last command.

For example:

```
$d j1-5;ds1-5;dt1-5;l=12b
```

JES2 routes the job, system task, and time-sharing information to display area B of console 12 rather than to the default console.

To route certain command responses to a specified destination and the remaining responses to another, enter:

- The L= parameter with the commands that are to be specially routed responses.
- A semicolon and L= to route all commands not requiring specially routed responses.

For example:

```
$d j1-5,l=12;;ds1-5;dt1-5;1=4a
```

JES2 routes the job information to console 12, while routing the system task and time-sharing information to area A of console 4.

Note: The L= parameter is invalid if entered through an internal reader. This restriction does not apply to L= subparameters that are normally enclosed in apostrophes.

For example:

```
$ta,i=30,'$da,l=01a',l=01  /* AN INVALID COMMAND */
$ta,i=30,'$da,l=01a'       /* A VALID COMMAND */
```

Adding Comments to Commands

You can add comments to JES2 commands to explain the intended action. This option often aids in later problem diagnosis. (All JES2 commands are recorded in SYSLOG.) The rules for coding comments are:

- **Delimiters**

  Use the beginning delimiter (/*) and the ending delimiter (*/). They cannot be interchanged. See the following example. If you omit the beginning delimiter, JES2 includes the comment text as part of the command. If you omit the ending delimiter, JES2 fails the command and issues the $HASP649 INVALID COMMAND message.

```
$t a,t=11.15,'$slne4'/* at 11:15 AM START LINE 4 AUTOMATICALLY */
```

  Note: The JES2 command processor deletes all comments, just as it deletes blanks. If you need to retain comments, enclose the comment within apostrophes. In the following example, JES2 retains the first comment, AUTO START, but deletes the second comment, AT 11:15 AM START LINE 4 AUTOMATICALLY.

```
$t a,t=11.15,'$slne4/*AUTO START*/' /* AT 11:15 AM START LINE 4 AUTOMATICALLY */
```

  If you enter a command with a comment and omit the comment delimiters, the command fails because JES2 compresses the command and deletes all the blanks. For example:

```
$h j123        INVALID COMMAND WITHOUT COMMENT DELIMITERS
```

  This command is not valid. JES2 issues a message because 123INVALID is not a valid job identifier.

- **Placement**

  Place comments anywhere within a command. For example:

```
$d/*SAME */ spl/*COMMAND*/,v/*AS*/=spo/*THE ONE*/ol12,/*BELOW*

$d spl,v=spool12  /* SAME COMMAND AS THE ONE ABOVE  */
```

  Because JES2 deletes all blanks and comments within commands, both examples of the display spool command shown above are equivalent to $DSPL,V=SPOOL12.

Parameter Ranges

Some commands have parameters that allow you to specify a range of values. The following explains the ranges for parameters with subscripts **(nnnn), (nnn),** or **(n)**:

- **(nnnn)** - denotes that you may specify a range for the subscript as follows:

  nnnn
  A specific numeric value.

  nnnn-nnnn
  A specific numeric range (for example, 1–15 or 15–1 where 15–1 is interpreted as having all the values from 1 to 15). No matter how the range is specified, all members of the range are processed. Descending or ascending specification does not matter.

  nnnn-*
  A generic numeric range (for example, 3-* denotes a range from 3 to the highest value allowed).

  ***-nnnn**
  A generic numeric range (for example, *-3 denotes a range from the highest value allowed to 3).

  ***** A generic value that denotes all values in a defined range.
- **(nnn)** - denotes that you may specify a range for the subscript in the same way as (nnnn), where (nnn) is 1-255.
- **(n)** - denotes that you may specify a value (0-9) or a generic range (*).

Note: For display commands, you can omit the subscript. If omitted, this denotes a generic value to include all values in a defined range. For example, the command $D MEMBER is equivalent to $D MEMBER(*).

For a description of the allowed ranges for **all** parameter specifications, see “JES2 Initialization Statement and Parameter Summary Table” in *z/OS JES2 Initialization and Tuning Reference*.

Note: Using the ALL parameter on any type of display command that may involve up to 30,000 jobs is not recommended.

Subscript Ranges

Ranges appear in JES2 initialization statements and commands as subscripts of the name associated with the initialization statement.

```
REDIRect(vvvvvvvv)

$ADD REDIRect(vvvvvvvv)
```

Note: The name of the initialization statement and the target of the command are the same.

All KEYWORD= ranges must be coded explicitly; whereas subscript ranges can either be coded explicitly or as a generic range using the asterisk (*). The use of parenthesis with a generic range is optional for all numeric ranges, but is required for symbolic (character) ranges. Throughout this book, the parenthesis are included for consistency and clarity of presentation. It is recommended that you use parenthesis when you specify a range.

- Example: Initialization statement (generic subscript)

  ```
  NODE(5-*) PATHMGR=NO
  ```
- Example: Commands (generic subscript)

  ```
  $d jobclass(d-*),qheld=yes,qheld

  $Doff(*-5).JT,CLASS=a,b,c,z

  $D OFF(1-10).ST
  ```

How JES2 interprets the use of the asterisk in specifying the subscript depends on how it is used in the command or statement. “Using Wildcards” on page 93 shows how the asterisk is coded to indicate various ranges.

Table 42. Coding Asterisks on Initialization Statements

```
RANGE     INTERPRETATION and RESULT

*   All values in the range (for nodes and jobclasses)
    Statement: NODE(*) COMPACT=1,.-->All nodes
    Command:   $d jobclass(*),.   -->All jobclasses

n-* Range from n to highest value
    Statement: NODE(5-*) compact=2  -->5 to highest value
    Command:   $Dnode(3-*)NAME=XRAY -->3 to highest value

*-m  Range from highest descending to m
     Statement: PRT(*-1) ws=(W,Q,R/)       -->highest to 1
     Command:   $d jobclass(*-C),qheld=yes -->highest to C

c*   All values starting with char "c"
     Statement: APPL(OUT*).JT  All APPLs
                                 starting with OUT
     Command:   $d jobclass(A*),... -->All jobclasses
                                        starting with A
```

Note: When specified in a numeric range, the asterisk **always** indicates the highest defined value in either the ascending (n-*) or descending (*-m) order.

Statement Range Considerations: Care should be taken when using the asterisk on initialization statements and commands. Processing times can increase. For example, the statement NODE(*) increases processing time drastically, although no additional nodes are actually created, and no changes are made to nodes outside the defined range. Likewise, the command, $T NODE(*), increases processing time.

The PRT statement, however, processes differently. The initialization statement, PRT(*), resets values on only those printers that have been previously defined by initialization statements. But the PRT(1-*) initialization statement will define 32767 printers (the maximum number).

Route Codes

A route code defines a destination for a piece of output. NnnnnRmmmm is the most basic form of a JES2 route code, indicating remote mmmmm at node nnnn. This basic form is called the explicit form of a route code. When the node is local (our own node), the Nnnnn can be omitted. In order to have the destination resolved to NODE1, REMOTE1, the destination needs to be qualified with a ’dot’:

```
DEST=N1.R1
DEST=N1.RM1
DEST=N1.RMT1
```

The maximum size of a route code is 18 characters. You can specify a route code in any of the forms listed below (although specific commands may be more limited). Note that a slash, a colon, or parentheses can be used instead of a period anywhere a period appears as a separator in a route code. For example, you could specify node.remote, node:remote, node/remote, or node(remote) for a route code.

- LOCAL.*
- LOCAL|ANYLOCAL
- destid
- Nnnnn|nodename

- Nnnnn.Rmmmm|node.remote|node.userid
- Ummmm
- node.destid
- remote
  - LOCAL|ANYLOCAL
  - Rmmmm
  - destid
  - userid
  - node

If /R=LOCAL is specified on a command, only output that has explicitely a destination of LOCAL will be released. Destination of a userid which resides on local node will not be released. However, if you specify LOCAL.*, outputs having a destination of LOCAL will be released as well as outputs destined to local userid:

```
$HASP686 OUTPUT(JEANAMB)
$HASP686 OUTPUT(JEANAMB)   OUTGRP=1.1.1,BURST=NO,FCB=****,
$HASP686                   FLASH=****,FORMS=STD,HOLD=(NONE),
$HASP686                   OUTDISP=HOLD,PRIORITY=144,
$HASP686                   PRMODE=LINE,QUEUE=B,
$HASP686                   RECORDS=(312 OF 312),ROUTECDE=JFB,
$HASP686                   SECLABEL=,TSOAVAIL=NO,UCS=****,
$HASP686                   USERID=JEAN,WRITER=
```

Above destination is destined to userid JFB on local node. The $OJ1286,/R=LOCAL will have no effect on output. $OJ1286,/R=LOCAL.* will release above output.

In most places, userids may be used instead of remotes. A userid at the local node must have the format of a valid TSO userid. It must begin with an alphabetic character (A-Z) or a special character (@, #, or $). The remaining characters may be alphabetic, numeric, or special characters. Userids at non-local nodes may contain any characters except the following:
- Separators: a period; a colon; a slash; a set of parentheses.
- Delimiters: a comma; a blank; hexadecimal ’00’.

In some commands, generic userids are allowed. A generic userid is a userid that ends in an asterisk (*) and refers to all userids that begin with any characters preceding the *. Note that if the userid is a local userid, then the * can be specified in the last position of the userid.

Using Wildcards

Several types of commands can use wildcards to select or filter on a subset that matches a combination of characters (mask). The types of commands that can use wildcards include:
- Commands that use symbolic subscripts (for example, $D NODE)
- Commands that use filtering (the $D commands)
- Commands that are job-related (for example, $A job)
- Commands that pertain to printers, punches, and job and SYSOUT receivers and transmitters.

The two kinds of wildcards JES2 uses are:

- Multiple-character wildcard, which is specified by an asterisk (*). The asterisk (*) means zero or more characters of any kind can be used here. For example, AB* matches ABC or ABCDEFG or ABCXXE.
- Single-character wildcard, which is specified by a question mark (?). The question mark (?) means any single character can be used here. For example, ABC?E?? matches ABCDEFG or ABC1E23 but not ABCXXE.

The following examples show the different uses of wildcards:

```
$DJ1-*,JOBMASK=IEB*
```

Wildcards are used here to specify the maximum job number, and in the job mask. JES2 displays output for all jobs that have a job name starting with the characters IEB.

```
$D NODE(*),SUBNET=B?E
```

Wildcards are used here to display information about all nodes whose subnet name matches a specific combination of characters.

```
$T PRT(5),JOBNAME=POK?*
```

Wildcards are used to select jobs for this printer whose name matches the selection criteria set by JOBNAME.

Range Summary

The following tables summarize and illustrate how you should code JES2 initialization statements and commands using subscripts. Table 43, Table 44 on page 95, and Table 45 on page 96 focus your attention to the NAME of the initialization statement or the object of the command. You can use these tables as a reference to guide your coding. “Examples of Numeric and Symbolic Subscripts” on page 97 makes you aware of how JES2 processes numbers and names.

Table 43. Numeric Only (used for most devices, such as PRT, PUN, LINE, RMT)

Specification	Explanation and Examples

NAMEnn	number nn
	`RMT44 BUFSIZE=3500,COMPRESS=YES`
	`$T R5.PU1,JOBNAME=todeko,RANGE=(1,6),....`

NAME(nn)	number nn
	`RMT(3) BUFSIZE=4096,COMPRESS=NO`
	`$D R(3).PU(22),COMP,FLUSH,LRECL`

NAMEnn-mm	Ascending or descending range nn to mm
	`LINE5-2 COMPRESS=NO,JRNUM=2,JTNUM=2,...`
	`$T RMT5-1,MFORM=T,SHAR=Y,TRANSPAR=N`

NAME(nn-mm)	Ascending or descending range nn to mm
	`PRT(25-22) CREATOR=fredonia,DEVFCB=TABX`
	`$D PUN(11-10),CR,F,JOB`

NAMEnn-*	Ascending range from nn to maximum possible value
	`LINE5-* COMPRESS=NO,JRNUM=2,JTNUM=2,...`
	`$T RMT5-*,MFORM=T,SHAR=Y,TRANSPAR=N`

NAME(nn-*)	Ascending range from nn to maximum possible value
	`RDR(3-*) XEQDEST=seattle`
	`$Trdr11-*,tr=yes,Q`

Table 43. Numeric Only (used for most devices, such as PRT, PUN, LINE, RMT) (continued)

Specification	Explanation and Examples

NAME*-nn	Dscending range from maximum possible value to nn
	`LINE*-5 LOG=YES,TR=YES,SRNUM=224`
	`$S line *-1`

NAME(*-nn)	Dscending range from maximum possible value to nn
	`LINE(*-12) LOG=YES,TR=YES`
	`$T line (*-10),DISCON=QUIESCE`

NAME(*)	All values, but holes not filled in by create requests
	`RMT(*) BUFSIZE=512,COMPRESS=YES`
	`$T RMT(*),BUFSIZE=1024,COMPRESS=NO`

NAME(mm,nn)	Multiple subscripts
	`LINE(2,6) LOG=YES,TR=YES`
	`$tline(1,3),DISCON=QUIESCE`

NAME(mm,nn-pp)	Multiple subscripts (one subscript is a range)
	
	If the subscripts are processed individually, it is possible for a particular element to be processed multiple times (that is, for NAME(1-3,2), element 2 is processed twice).
	`rdr(1,10-15,22) AUTH=(JOB=YES)`
	`$D rdr(2,4-8,11),AUTH=JOB`

NAME	When allowed, equivalent to NAME(*).
	`d PRT`
	`$D L.jr`

Note: Valid Names: PRT, PUN, LINE, RMT.	

Table 44. Symbolic Only (REDIRECT, APPL, JOBCLASS, OUTCLASS, SPOOL)

Specification	Explanation and Examples

NAME(xxxx)	Explicit subscript
	`REDIR(CN320) DA=cn330`
	`$T REDIR(cn3e0),du=cn320`
	`$ADD redir(cn3e0)`

NAME’xxxx’	Explicit character string
	`APPL'jmaxsum' compact=65,node=3`
	`$dappl'maxsum',compact,line,logmode,...`

NAME(’xxxx’)	Explicit subscript as a character string
	`JOBCLASS('A') COMMAND=DISPLAY,HOLD=YES`
	`$d jobclass('c')`

NAME(xxxx-yyyy)	Explicit symbolic range. Wildcard characters may be specified in ranges, but they are not treated as wildcards.
	`OUTCLASS(a-j) blnktrnc=no,trkcell=no`
	`$Toutclass(2-3),outdisp=(purge,..`

NAME(’xxxx’-’yyyy’)	Explicit symbolic range as characters
	`REDIR('CN320'-'cn321') DA=cn444`
	`$T REDIR('cn3e0'-'cn4e0'),du=cn320`

NAME(X*Y?Z)	* and ? are treated as wildcard characters
	`APPL(jmax*) compact=65,node=3`
	`$dappl('maxs?m'),compact,line,logmode,..`

Table 44. Symbolic Only (REDIRECT, APPL, JOBCLASS, OUTCLASS, SPOOL) (continued)

Specification	Explanation and Examples

NAME'X*Y?Z'	* and ? are NOT treated as wildcard characters
	`OUTCLASS'a*',blnktrnc=no,trkcell=no`
	`$Djob'T?cobell'`

NAME(xxxx,yyyy)	Multiple keywords, must be in parenthesis and may include ranges, wildcards, or quoted strings. If the subscripts are processed individually, it is possible for a particular element to be processed multiple times.
	`JOBCLASS('A','B',c*,D),HOLD=YES`
	`$d jobclass('c'-'d',e,f,g*)`

NAME	When allowed, this is equivalent ot NAME(*). Holes are never filled on create requests.
	`JOBCLASS`
	`$Djob,cards`

Table 45. Numeric and Symbolic (NODE, MEMBER, INIT.)

Specification	Explanation and Examples

NAMEnn	Numeric subscript
	`NODE001 auth=(net=yes),compact=65`
	`$dnode4`

NAME(nn)	Symbolic name nn (if it exists, else numeric value nn)
	`MEMBER(3) NAME=100`
	`$Tmember(100),IND=YES`

NAME'nn'	Name nn
	`INIT'3' name=backup,class=z`
	`$Si'3',status=halted`

NAMEnn-mm	Numeric range
	`INIT01-05 class=x,y,z,start=no`
	`$di01-02,class>x,status=halted`

NAME(nn-mm)	Numeric range. The expected performance would be as symbolic range, and if nothing exists in range, as a numeric range.
	`NODE(001-022) auth=(net=yes),...`
	`$dnode(4-9)`

NAME('nn-mm')	Symbolic range
	`MEMBER('100-115') NAME=wilcox`
	`$dmember('100-112'),IND=YES`

NAME(xxxx-mm)	Symbolic range. See note 3.
	`NODE(nyork-102) auth=(net=yes),compact=65`
	`$dnode(atlanta-austin)`

NAME(nn-xxxx)	Symbolic range. See note 2.
	`INIT(01-txs) class=x,y,z,start=no`
	`$di(5-last),class>x,status=halted`

NAME(xxxx-yyyy)	Symbolic range
	`NODE(gaith-seattle) auth=(net=yes),...`
	`$dnode(atlanta-columbus)`

Table 45. Numeric and Symbolic (NODE, MEMBER, INIT.) (continued)

Specification	Explanation and Examples

NAME(nn,'xxxx')	Multiple subscripts, may mix any valid flavors (numerics, symbolics, ranges, wildcards). See note 1.
	`NODE(100,'alpha'-'sigma',102) PATHMGR=no`
	`$d member (3,'beta',1-5),IND=YES`

Notes:

1. If the subscripts are processed individually, it is possible for a particular element to be processed multiple times.
2. To avoid confusion, it is recommended that when both numerics and symbolics are allowed, symbolic names (usually specified via a NAME=parameter) either include at least one alphabetic character, or match the numeric value exactly (for example, INIT(1) NAME=1).
3. Any numeric is allowed. Symbolic is only allowed when both numeric and symbolic are allowed.
4. All ranges are considered numeric unless at least one of the range limits is forced to be a symbolic. Holes are filled only on numeric ranges.

Examples of Numeric and Symbolic Subscripts: The following table illustrates how numeric and symbolic subscripts are processed. The table is based on the following initialization statements for system initiators.

To avoid confusion, it is recommended that when both numeric names and symbolic names are allowed, symbolic names (specified using the NAME= parameter) either include at least one alphabetic character or match the numeric value exactly (for example, INIT(1) NAME=1). This example illustrates the confusion that can occurs when this is not done.

Based on these initiator definitions, JES2 interprests the initiator number and its name as follows:

Table 46. JES2 Processing of Initiators

Example Initiator Statements	

`INIT1 NAME=3`
`INIT2 NAME=2`
`INIT3 NAME=1`
`INIT4 NAME=4A`
`INIT5 NAME=10`
`INIT6 NAME=6`
`INIT7 NAME=7`
`INIT8 NAME=8`
`INIT9 NAME=9`
`INIT10 NAME=10`
`INIT11 NAME=11`	

Command Example	**JES2 Processing Interpretation**
`$dinit1` `$HASP892 INIT(1) NAME=3`	Initiator number 1.
`$dinit(1)` `$HASP892 INIT(3) NAME=1`	Initiator with name ″1″ exists.
`$dinit(5)` `$HASP892 INIT(5) NAME=10`	Initiator with name ″5″ does not exist, use init number 5.

Table 46. JES2 Processing of Initiators (continued)

Example Initiator Statements	

`INIT1 NAME=3`
`INIT2 NAME=2`
`INIT3 NAME=1`
`INIT4 NAME=4A`
`INIT5 NAME=10`
`INIT6 NAME=6`
`INIT7 NAME=7`
`INIT8 NAME=8`
`INIT9 NAME=9`
`INIT10 NAME=10`
`INIT11 NAME=11`	

Command Example	**JES2 Processing Interpretation**
`$dinit'1'` `$HASP892 INIT(3) NAME=1`	Initiator with name ″1″.

`$dinit3-4`
`$HASP892 INIT(3) NAME=1`
`$HASP892 INIT(4) NAME=4A`
	Initiator in numeric range of 3-4.

`$dinit(3-4)`
`$HASP892 INIT(3) NAME=1`
`$HASP892 INIT(4) NAME=4A`
	Initiator in numeric range of 3-4.

`$dinit('3'-'4')` `$HASP892 INIT(1) NAME=3`	Initiator with names in EBCDIC range ’3’ to ’4’.

`$dinit(3-4b)`
`$HASP892 INIT(1) NAME=3`
`$HASP892 INIT(4) NAME=4A`
	4b is non-numeric, so initiator in EBCIDIC range ’3’-’4b’.

`$dinit('1'-'2')`
`$HASP892 INIT(2) NAME=2`
`$HASP892 INIT(3) NAME=1`
`$HASP892 INIT(5) NAME=10`
`$HASP892 INIT(10) NAME=10`
`$HASP892 INIT(11) NAME=11`
	All initiators between EBCDIC ’1’ to ’2’ in HEX that is `'F1404040'` to `'F2404040'`.

`$dinit('1'-'10')`
`$HASP892 INIT(3) NAME=1`
`$HASP892 INIT(5) NAME=10`
`$HASP892 INIT(10) NAME=10`
	All initiators between EBCDIC ’1’ to ’10’ in HEX that is `'F1404040'` to `'F1F04040'`

`$dinit(4-*)`
`$HASP892 INIT(4) NAME=4A`
`$HASP892 INIT(5) NAME=10`
`$HASP892 INIT(6) NAME=6`
`$HASP892 INIT(7) NAME=7`
`$HASP892 INIT(8) NAME=8`
`$HASP892 INIT(9) NAME=9`
`$HASP892 INIT(10) NAME=10`
`$HASP892 INIT(11) NAME=11`
	Numeric range (4 is numeric and * represents the maximum numeric value).

`$dinit(4a-*)`
`$HASP892 INIT(4) NAME=4A`
`$HASP892 INIT(6) NAME=6`
`$HASP892 INIT(7) NAME=7`
`$HASP892 INIT(8) NAME=8`
`$HASP892 INIT(9) NAME=9`
	Ascending EBCDIC range ’4A’ to ’*’, in HEX that is `'F4C14040'` to `'FFFFFFFF'`

Table 46. JES2 Processing of Initiators (continued)

Example Initiator Statements	

`INIT1 NAME=3`
`INIT2 NAME=2`
`INIT3 NAME=1`
`INIT4 NAME=4A`
`INIT5 NAME=10`
`INIT6 NAME=6`
`INIT7 NAME=7`
`INIT8 NAME=8`
`INIT9 NAME=9`
`INIT10 NAME=10`
`INIT11 NAME=11`	

Command Example	**JES2 Processing Interpretation**
Note: There are exceptions to the processing results above. When using JES2 Commands for JOB, STC, TSU, or JOBQ, a numeric subscript (JOB(nn)) is always treated as numeric unless enclosed in quotes. Also, job names consisting of all numerics are not valid but may occur in error scenarios for example, a job is incorrectly submitted or received from NJE.	

Using filtering to control and display information

JES2 allows you to refine how certain information is displayed or processed. Using command parameters and keyword values, you can define the selection criteria JES2 is to use, and how much information JES2 should display in the message text.

- **Defining the Selection Criteria**

  To limit the type of information JES2 should look for, you can define the selection criteria JES2 is to use by specifying an asterisk or a numerical range within parentheses after the command verb, specific keyword value or part of a keyword value. For example,

```
$D MODULE(*),LOADMOD=HASC*

$HASP468 MODULE(HASCDAU)   ADDRESS=034DD018,ASSEMBLY=(03/08/93,
$HASP468                   13.03),ENVIRON=USER,EXITPTS=(),
$HASP468                   IBMJES2=BASE,LASTAPAR=NONE,
$HASP468                   LENGTH=0002D0,LOADMOD=HASCDAU,
$HASP468                   MACLEVEL=4,SPLEVEL=CHECK

$HASP468 MODULE(HASCDSAL)  ADDRESS=0349F358,ASSEMBLY=(03/08/93,
$HASP468                   13.03),ENVIRON=USER,
$HASP468                   EXITPTS=(31,34,48),IBMJES2=BASE,
$HASP468                   LASTAPAR=NONE,LENGTH=004CA0,
$HASP468                   LOADMOD=HASCDSAL,MACLEVEL=4,
$HASP468                   SPLEVEL=CHECK

$HASP468 MODULE(HASCXJCT)  ADDRESS=033C0090,ASSEMBLY=(04/21/93,
$HASP468                   12.27),ENVIRON=USER,EXITPTS=(),
$HASP468                   IBMJES2=BASE,LASTAPAR=NONE,
$HASP468                   LENGTH=0005B0,LOADMOD=HASCXJCT,
$HASP468                   MACLEVEL=4,SPLEVEL=CHECK
:
```

  JES2 limits its search to load modules that begin with the characters HASC. It then displays a variety of information about all the modules that are assembled and linked into load modules that begins with the characters HASC.

- **Limiting How Much Information JES2 Displays**

To limit the amount of information JES2 should display, specify a parameter, but no keyword value for the parameter. For example,

```
$D MODULE(*),LOADMOD

$HASP468 MODULE(FREDXJ00)
$HASP468 MODULE(HASCDAU)   LOADMOD=HASCDAU
$HASP468 MODULE(HASCDSAL)  LOADMOD=HASCDSAL
$HASP468 MODULE(HASCDSOC)  LOADMOD=HASCDSOC
$HASP468 MODULE(HASCDSS)   LOADMOD=HASCDSS
$HASP468 MODULE(HASCGGKY)  LOADMOD=HASCGGKY
$HASP468 MODULE(HASCGGST)  LOADMOD=HASCGGST
:
:
```

JES2 displays only the limited amount of information you requested to see--all the module names and the load module names.

- **Combining Techniques**

  You can combine both techniques to obtain information that is very specific. For example,

```
$D MODULE(*),LOADMOD=HASCX*,LOADMOD

$HASP468 MODULE(HASCXJCT)  LOADMOD=HASCXJCT
```

  In this example, the command limits the number of modules that meet the criteria set; the module must be assembled and linked into a load module that begins with the characters HASCX. Also, the amount of information you wish to see about each module is limited to display only the load module name.

  Selection filtering is not limited to display commands. For example, you may want to change the destination associated with all SYSOUT queues to class A. This could be done using the $TO JOBQ command. However, the command $TO JOBQ(*),QUEUE=A,DEST=N2 would change both the output queue and the destination assocaited with all SYSOUT. For keywords such as QUEUE= you must indicate whether this is being used as a filter or as a modification keyword. To do this, prefix the keyword with a ″/″. If you want to change all output queues to class A to have a destination of N2, enter the command $TO JOBQ(*),/QUEUE=A,DEST=N2. The ″/″ prefix can be used on any command to indicate that the keyword that follows is a filter. It is only required on commands where a single keyword could be interpreted as both a filter and a modification keyword. For example, to change the execution class of all CLASS A jobs to CLASS B, enter the command $TJOB(*),/CLASS=A,CLASS=B. All filter keywords must precede modification keywords. To ensure compatibility with future changes, IBM recommends that non-display commands which use selection filtering, prefix filter keywords with the ″/″. This is espically important for commands issued by automation scripts.

- **Expanding Filtering Techniques**

  Some commands can use wildcards, the JOBMASK parameter, or the JOBQ parameter (or a combination of all three) to control the action JES2 is to take. For example, using wildcards, and the JOBQ and JOBMASK parameters, you can control the amount of jobs JES2 is to release, as shown in the next example.

```
$A JOBQ,JOBMASK=I*

  STC00010  $HASP890 JOB(INIT)
  $HASP890 JOB(INIT)     STATUS=(EXECUTING/IBM1),CLASS=STC,
  $HASP890               PRIORITY=9,SYSAFF=(IBM1),HOLD=(NONE),
  $HASP890               INITASID=012D
  STC00017  $HASP890 JOB(INIT)
  $HASP890 JOB(INIT)     STATUS=(EXECUTING/IBM2),CLASS=STC,
  $HASP890               PRIORITY=9,SYSAFF=(IBM2),HOLD=(NONE),
  $HASP890               INITASID=NONE
  JOB00018  $HASP890 JOB(IEBGENER)
  $HASP890 JOB(IEBGENR)  STATUS=(AWAITING EXECUTION),CLASS=A,
  $HASP890               PRIORITY=9,SYSAFF=(ANY),HOLD=(NONE),
  $HASP890               INITASID=NONE
  JOB00036  $HASP890 JOB(IBMUSERX)
  $HASP890 JOB(IBMUSERX) STATUS=(AWAITING EXECUTION),CLASS=A,
  $HASP890               PRIORITY=9,SYSAFF=(ANY),HOLD=(NONE)
```

In this example, JES2 releases all held jobs, started tasks, and time-sharing users whose job names begin with the character I.

How to read syntax diagrams

This section describes how to read syntax diagrams. It defines syntax diagram symbols, items that may be contained within the diagrams (keywords, variables, delimiters, operators, fragment references, operands) and provides syntax examples that contain these items.

Syntax diagrams pictorially display the order and parts (options and arguments) that comprise a command statement. They are read from left to right and from top to bottom, following the main path of the horizontal line.

Symbols

The following symbols may be displayed in syntax diagrams:

Symbol	Definition
►►──	Indicates the beginning of the syntax diagram.
──►	Indicates that the syntax diagram is continued to the next line.
►──	Indicates that the syntax is continued from the previous line.
──►◄	Indicates the end of the syntax diagram.

Syntax items

Syntax diagrams contain many different items. Syntax items include:

- Keywords - a command name or any other literal information.
- Variables - variables are italicized, appear in lowercase and represent the name of values you can supply.
- Delimiters - delimiters indicate the start or end of keywords, variables, or operators. For example, a left parenthesis is a delimiter.
- Operators - operators include add (+), subtract (-), multiply (*), divide (/), equal (=), and other mathematical operations that may need to be performed.
- Fragment references - a part of a syntax diagram, separated from the diagram to show greater detail.
- Separators - a separator separates keywords, variables or operators. For example, a comma (,) is a separator.

Keywords, variables, and operators may be displayed as required, optional, or default. Fragments, separators, and delimiters may be displayed as required or optional.

Item type	Definition
Required	Required items are displayed on the main path of the horizontal line.
Optional	Optional items are displayed below the main path of the horizontal line.
Default	Default items are displayed above the main path of the horizontal line.

Syntax examples

The following table provides syntax examples.

Table 47. Syntax examples

Item	Syntax example
Required item. Required items appear on the main path of the horizontal line. You must specify these items.	```►►─KEYWORD─required_item──────────────────►◄``` KEYWORD required_item
Required choice. A required choice (two or more items) appears in a vertical stack on the main path of the horizontal line. You must choose one of the items in the stack.	```►►─KEYWORD─┬─required_choice1─┬──────────►◄ └─required_choice2─┘``` KEYWORD required_choice1 KEYWORD required_choice2
Optional item. Optional items appear below the main path of the horizontal line.	```►►─KEYWORD─┬──────────────────┬──────────►◄ └─optional_item─┘``` KEYWORD optional_item
Optional choice. An optional choice (two or more items) appears in a vertical stack below the main path of the horizontal line. You may choose one of the items in the stack.	```►►─KEYWORD─┬──────────────────────┬──────►◄ ├─optional_choice1─┤ └─optional_choice2─┘``` KEYWORD optional_choice1 KEYWORD optional_choice2
Default. Default items appear above the main path of the horizontal line. The remaining items (required or optional) appear on (required) or below (optional) the main path of the horizontal line. The following example displays a default with optional items.	```┌─default_choice1──┐ ►►─KEYWORD─┼────────────────────┼──────►◄ ├─optional_choice2─┤ └─optional_choice3─┘``` KEYWORD default_choice1 KEYWORD optional_choice2 KEYWORD optional_choice3

Table 47. Syntax examples (continued)

Item	Syntax example
Variable. Variables appear in lowercase italics. They represent names or values.	►►─KEYWORD─*variable*──────────────────────────►◄
Repeatable item. An arrow returning to the left above the main path of the horizontal line indicates an item that can be repeated. A character within the arrow means you must separate repeated items with that character. An arrow returning to the left above a group of repeatable items indicates that one of the items can be selected, or a single item can be repeated.	►►─KEYWORD─┬─repeatable_item─┬──────────────────►◄ │◄──────────────┘ ►►─KEYWORD─┬─,──────────┬─repeatable_item─┬──────────►◄ │◄───────────┘ └─────────────────────────┘
Fragment. The ─┤ fragment ├─ symbol indicates that a labelled group is described below the main syntax diagram. Syntax is occasionally broken into fragments if the inclusion of the fragment would overly complicate the main syntax diagram.	►►─KEYWORD─┤ fragment ├──────────────────────────►◄ **fragment:** ├─┬─,required_choice1─┬─┬─┬─┤ │ │ │ │ └─,required_choice2─┬─┬─,default_choice─┬─┘ │ └─┬─,optional_choice─┬─┘ │ └─────────────────────┘

Keywords defined

Display limiting keywords will restrict the amount of output generated on the display command. This can be particularly useful for automation to parse the result of a $D command. For example:

```
$DOJOBQ,JM=RMF*,PRMODE,OUTGRP,ROUTECDE
```

This means to scan all queues for outputs that start with a jobname of RMF and display the PRMODE, OUTGRP, and ROUTECDE:

```
$HASP686 OUTPUT(RMF) 458
$HASP686 OUTPUT(RMF)       PRMODE=LINE,OUTGRP=2.1.1,
$HASP686                   ROUTECDE=LOCAL
```

Filtering keywords can also be added to the command for more granularity.

Modification limiting keywords are the keywords that can be changed on a command. These keywords will generally appear on most $T commands.

Selection limiting keywords can be viewed as filter keywords. Again, these keywords will appear on most $T and $D commands. In other words, the values you want to modify or display for a given job, on which it should take effect. In order to tell JES2 this is a filter keyword, the keyword must be preceded by a slash. For example:

```
$TOJOBQ,/FCB=JFB,FCB=ABC
```

This will change all output groups that has an FCB=JFB to ABC. Multiple filtering keywords can be used:

```
$TOJOBQ,/FORMS=123,/OUTG=1.1.1,FCB=456
```

This means to scan all queues for output of a FORMS=123 and OUTG=1.1.1 and change the FCB to 456. Additional modification keywords can be added to the same command as well:

```
$TOJOBQ,/FORMS=123,/FCB=789,QUEUE=A,ROUTECDE=PRT5
```

$A A - Release All Jobs

Function

To release all jobs:
- that have the member through which the command is entered as an affinity.
- whose affinities include the specified member.
- within the multi-access spool configuration.

Syntax

```
►►──$A──A──┬──────────┬──────────────────────────────────────────►◄
           ├─,memname─┤
           └─,ALL─────┘
```

Parameters

A All jobs held by the $H A command that are currently in the member are released.

If this is a multi-access spool configuration and neither memname nor ALL is specified, all jobs that have affinity for the member through which the command is entered are released.

ALL
All jobs, regardless of their affinities, are released.

memname
The 1 to 4 character alphameric identifier of a member in the multi-access spool configuration. JES2 releases all jobs that have affinity for the specified member.

Authority Required

This command requires **job** authority. The description of the $T RDRnn command explains how to ensure the proper MVS system command group authority is assigned.

This command requires **update** security access authority. For a description of assigning command input authority, see *z/OS JES2 Initialization and Tuning Guide*.

Scope

MAS-Wide. This command has an effect across the entire MAS.

Messages

The $HASP000 message indicates JES2 has accepted the command.

Example

```
1  $a a

  $HASP000 OK
```

JES2 releases all jobs originally held by a $H A command that are currently in the member. If the member is in a multi-access spool configuration, JES2 releases all jobs originally held by a $H A command that have affinity for the member through which the command is entered.

$A Job - Release Held Jobs

Function

To release held jobs; for example those held by:

- $G H commands
- $H A commands
- $H job commands
- /* SETUP control statements
- $T Nn, H=JR commands
- $T RDRn, H=Y commands
- TYPRUN=HOLD JCL parameters

Syntax

```
►►─$A─┬─Job──────┬─┬─nn──────────────────────────────┬─┬──────────────────────────────────────────────────────────────────►
      ├─JOBQ─────┤ │   └─-──┬─mm──┬──┘ │ └─,──┬─/─┬─CMDauth──┬─=──┬─┬─cmdauth──────────────┬─┘
      ├─JQ───────┤ │        └─*──┘    │                        └─^=─┘ │ ┌──────(1)──────┐    │
      ├─Stc──────┤ │─'job'────────────┤                               └─(──┴──cmdauth──┴──)─┘
      └─Tsu──────┘ └─(──┬──────────────┬──┬─nn──┬──┬──────────┬──┬──┬──┘
                        │ ┌──────,──────┐ │  *  │  └─-──┬─mm──┬─┘  │
                        │ │             │ │     │       └─*──┘    │
                        │ │             │ │     └─job─────────────┤
                        │ │             │ │       'job'           │
                        │ └─────────────┘ │                       │
                        └─────────────────┴───────────────────────┘

►─┬─┬─/─┬─Age──┬─┬─>─┬─days─┬─┬─┬─/─┬─Hours─┬─┬─>─┬─hours─┬─┬─┬─/─┬─JM──────┬─┬─=──┬─jobmask─┬─┬──────────────────►
  │ │   │      │ │ <─┘      │ │ │   │       │ │ <─┘       │ │ │   │         │ │ ^=─┘         │ │
  │ │   └─DAys─┘ │          │ │ │   └─/─┘   └─┘           └─┘ │   └─JOBMASK─┘ │ >─┘         │ │
  │ │   └─/─┘    │          │ │ │           │               │ │   └─/─┘     │ <─┘         │ │
  └─┘            └──────────┘ └─┘           └───────────────┘ └─────────────┘             └─┘

►─┬─┬─/─┬─Queue──┬─=──┬─┬─CNV────┬─┬─┬─/─┬─REBUILD─┬─=──┬─┬─No──┬─┬──────────────────────────────────────────►
  │ │   │        │ ^=─┘ │─INPUT──│ │ │   │         │ ^=─┘ │─Yes─│ │
  │ │   └─/─┘    └──────┘ │─OUT────│ │ │   └─/─┘   └──────┘ └─────┘ │
  └─┘                     │─PPU────│ └─┘                            └─┘
                          │─PURGE──│
                          │─RCV────│
                          │─SETUP──│
                          │─SPIN───│
                          │─XEQ────│
                          └─XMT────┘

►─┬─┬─/─┬─SPL────┬─=(──┬──────────,──────────┬──┬─┬─/─┬─%──┬─┬─>─┬─percent──┬─┬─┬─/─┬─TYPE──┬─=──┬─┬─JOB─┬─┬──────►
  │ │   │        │     │ ┌────────────────┐  │  │ │   │    │ │ <─┘          │ │ │   │       │ ^=─┘ │─STC─│ │
  │ │   └─SPOOL──┘     │ │                │  │  │ │   └─Percent─┘            │ │ └─/─┘       └──────┘ └─TSU─┘ │
  │ │   └─/─┘          │ │                │  │  │ │   └─/─┘                  │ │                              └─┘
  │ │                  │ └────────────────┘  │  │ └─Tgs──┬─>──┬─tgs──────────┤ │
  │ │                  └─────────────────────┘  │   │ /  │ <─┘              │ │
  │ │                                           │   └─Volumes─┬─=──┬─volume─┬─┤ │
  │ │                                           │   │ /  │     ^=─┘        │ │ │
  │ │                                           │   └─/─┘                  │ │ │
  │ │                                           │                          │ │ │
  │ │                                           │                          │ │ │
  │ │                                           │                          
```

Parameters

job
Specifies 1 to 8 alphanumeric, special ($, #, or @) or wildcard characters (or a combination of them) that can be used to select a subset of jobs whose job name matches this combination of characters (mask). For a description of using wildcards, see “Using Wildcards” on page 93.

‘job’
The name of the job that is released. This name must appear as coded on the JOB statement and must be enclosed in apostrophes. If more than one job exists with this name, no action is taken.

Job
A Batch job or range of batch jobs is to be released.

JOBQ|JQ
Specifies *all* jobs, STCs, and TSUs across the MAS for processing.

Stc
A started task or range of started tasks is to be released.

Tsu
A time-sharing user or range of time-sharing users is to be released.

Age|DAys<days | Age|DAys>days
Specifies the age of affected jobs in days. Only jobs more (with DAYS>nn) or less (with DAYS<nn) than the specified number of days in age are affected, The days are counted from the current hour.

CMDauth=(auth1{,auth2})
Only the jobs that can be affected from the specified remote(s) or node(s) will be released. The valid specifications are:

LOCAL|ANYLOCAL
Only the local devices at the local node can affect the output.

Nnnnn|nodename
Only local devices at the specified node can affect the output.

Rnnnn
Only the specified remote device can affect the output.

NnnnnRnnnn|nodename.Rnnnn
Only the specified remote device at the specified remote node can affect the output.

destid
A destid corresponding to any of the above remote devices.

Note: Specification of the CMDAUTH filter does not override the authority of the console from which the command is issued; both the authority of the console and the specified CMDAUTH filter must match for the job to be affected.

H|Hours=hours
Specifies the age of affected jobs in hours. Only jobs more (with HOURS>nn) or less (with HOURS<nn) than the specified number of hours in age are affected.

JM|JOBMASK=jobmask
Specifies 1 to 8 alphanumeric, special ($, #, or @) or wildcard characters (or a combination of them) that can be used to select a subset of jobs whose job

name matches this combination of characters (mask). For a description of using wildcards, see “Using Wildcards” on page 93.

Notes:

1. This is a positional parameter. Specify this following the job_id (JOB, STC, or TSU), or JOBQ parameter.
2. The JOBMASK parameter is not valid with the *‘jobname ’* parameter.

Queue={CNV|INPUT|OUT|PPU|PURGE|RCV| SETUP|SPIN|XEQ|XMT}
Only jobs on the specified job queue are to be released.

CNV
Only jobs awaiting conversion are to be released.

INPUT
Only jobs on the JES2 $INPUT queue are to be released.

OUT
Only jobs awaiting output processing are to be released.

PPU
Only jobs awaiting print/punch processing are to be released.

PURGE
Only jobs awaiting purge processing are to be released.

RCV
Only jobs on the JES2 $RECEIVE queue are to be released.

SETUP
Only jobs on the JES2 $SETUP queue are to be released.

SPIN
Only jobs awaiting spin processing are to be released.

XEQ
Only jobs awaiting execution are to be released.

XMT
Only jobs queued for network transmission are to be released.

REBUILD={No|Yes}
Jobs on the rebuild queue are to be released (Yes) or not released (No).

SPL|SPOOL={Percent|%|Tgs|Volumes}
Only jobs with specific SPOOL characteristics are to be released:

Percent|%
Only jobs using more (with %>nn) or less (with %<nn) than the specified percentage of the total available spool space are to be released.

Tgs
Only jobs using more (with Tgs>nn) or less (with Tgs<nn) than the specified number of track groups are to be released.

Volumes=(v1,v2,...)
Only jobs which have allocated spool space on the specified spool volume(s) are to be released.

TYPE={JOB|STC|TSU}
Indicates whether only batch jobs (JOB), started tasks (STC), or time-sharing users (TSU) are to be released.

XEQNode=xeqnode
Only jobs which are destined to execute at the specified node, or which have

already executed at the specified node, are to be released. The node name may be specified using the decimal node number (Nnnnnn) or an EBCDIC node name.

Authority Required

This command requires **job** authority. The description of the $T RDRnn command explains how to ensure the proper MVS system command group authority is assigned.

This command requires **update** security access authority. For a description of assigning command input authority, see *z/OS JES2 Initialization and Tuning Guide*.

Scope

MAS-Wide. This command has an effect across the entire MAS.

Messages

The $HASP890 message displays the released job.

JES2 issues message $HASP003 if the specified job was not being held.

Examples

1 `$aj'payroll'`

```
JOB00024  $HASP890 JOB(PAYROLL)
$HASP890 JOB(PAYROLL)   STATUS=(AWAITING EXECUTION),CLASS=A,
$HASP890                PRIORITY=9,SYSAFF=(ANY),HOLD=(NONE)
```

JES2 releases the batch job named PAYROLL and makes it available for processing.

2 `$aj(?ebg*)`

```
JOB00005  $HASP890 JOB(IEBGENER)
$HASP890 JOB(IEBGENER)  STATUS=(AWAITING EXECUTION),CLASS=A,
$HASP890                PRIORITY=9,SYSAFF=(ANY),HOLD=(NONE)
JOB00055  $HASP890 JOB(IEBGENER)
$HASP890 JOB(IEBGENER)  STATUS=(AWAITING HARDCOPY),CLASS=A,
$HASP890                PRIORITY=1,SYSAFF=(ANY),HOLD=(NONE)
```

JES2 releases any batch jobs whose job name includes EBG as the second, third, and fourth characters.

3 `$aj1-8,jm=?ebg*`

```
JOB00005  $HASP890 JOB(IEBGENER)
$HASP890 JOB(IEBGENER)  STATUS=(AWAITING EXECUTION),CLASS=A,
$HASP890                PRIORITY=9,SYSAFF=(ANY),HOLD=(NONE)
```

JES2 releases any batch jobs that fall within the range of jobs 1-8 whose job name includes EBG as the second, third, and fourth characters.

4 `$aj(1-3,i*,5-7)`

```
JOB00003  $HASP890 JOB(D96CLW1A)
$HASP890 JOB(D96CLW1A)  STATUS=(AWAITING EXECUTION),CLASS=A,
$HASP890                PRIORITY=9,SYSAFF=(ANY),HOLD=(NONE)
JOB00018  $HASP890 JOB(IEBGENER)
$HASP890 JOB(IEBGENER)  STATUS=(AWAITING EXECUTION),CLASS=A,
$HASP890                PRIORITY=9,SYSAFF=(ANY),HOLD=(NONE)
JOB00036  $HASP890 JOB(IBMUSERX)
$HASP890 JOB(IBMUSERX)  STATUS=(AWAITING EXECUTION),CLASS=A,
```

```
$HASP890                PRIORITY=9,SYSAFF=(ANY),HOLD=(NONE)
JOB00006  $HASP890 JOB(CNTLABC)
$HASP890 JOB(CNTLABC)   STATUS=(AWAITING EXECUTION),CLASS=A,
$HASP890                PRIORITY=9,SYSAFF=(ANY),HOLD=(NONE)
```

JES2 releases any batch jobs that fall within the range of jobs 1-3 or 5-7, PLUS any batch jobs whose job name begins with the letter I.

5 `$ajq(1-3,i*,5-7)`

```
STC00002  $HASP890 JOB(NEWS)
$HASP890 JOB(NEWS)      STATUS=(EXECUTING/IBM1),CLASS=STC,
$HASP890                PRIORITY=9,SYSAFF=(IBM1),HOLD=(NONE)
JOB00003  $HASP890 JOB(D96CLW1A)
$HASP890 JOB(D96CLW1A)  STATUS=(AWAITING EXECUTION),CLASS=A,
$HASP890                PRIORITY=9,SYSAFF=(ANY),HOLD=(NONE)
STC00010  $HASP890 JOB(INIT)
$HASP890 JOB(INIT)      STATUS=(EXECUTING/IBM1),CLASS=STC,
$HASP890                PRIORITY=9,SYSAFF=(IBM1),HOLD=(NONE),
$HASP890                INITASID=012D
STC00017  $HASP890 JOB(INIT)
$HASP890 JOB(INIT)      STATUS=(EXECUTING/IBM2),CLASS=STC,
$HASP890                PRIORITY=9,SYSAFF=(IBM2),HOLD=(NONE)
$HASP890                INITASID=NONE
JOB00018  $HASP890 JOB(IEBGENER)
$HASP890 JOB(IEBGENER)  STATUS=(AWAITING EXECUTION),CLASS=A,
$HASP890                PRIORITY=9,SYSAFF=(ANY),HOLD=(NONE)
JOB00036  $HASP890 JOB(IBMUSERX)
$HASP890 JOB(IBMUSERX)  STATUS=(AWAITING EXECUTION),CLASS=A,
$HASP890                PRIORITY=9,SYSAFF=(ANY),HOLD=(NONE)
JOB00006  $HASP890 JOB(CNTLABC)
$HASP890 JOB(CNTLABC)   STATUS=(AWAITING EXECUTION),CLASS=A,
$HASP890                PRIORITY=9,SYSAFF=(ANY),HOLD=(NONE)
TSU00007  $HASP890 JOB(D96CLW1)
$HASP890 JOB(D96CLW1)   STATUS=(EXECUTING/IBM1),CLASS=TSU,
$HASP890                PRIORITY=9,SYSAFF=(IBM1),HOLD=(NONE)
```

JES2 releases any batch jobs, started tasks, or time-sharing users that fall within the range of jobs 1-3 or 5-7, PLUS any whose job name begins with the letter I.

$ACTIVATE - Activate New Functions at the Current Release of JES

Function

To activate a particular level of JES2 processing.

Syntax

```
►►──$ACTIVATE──LEVEL=──z2──r4──────────────────────────────────────────────────►◄
```

Parameters

LEVEL=

The level of functions that you wish JES2 to support.

R4 activates the compatibility mode of JES2 processing. This allows pre-z/OS 1.2 members to coexist in the MAS with z/OS 1.2. In this mode certain functions of z/OS 1.2 are not available.

z2 activates the full function level of JES2 processing. This enables larger limits for jobs, output elements, trackgroup space, job number range, and improved trackgroup usage tracking. In z2 level, previous levels of JES2 cannot coexist in a MAS. Level z2 has implications for exits and vendor products.

Authority Required

This command requires **system** authority. The description of the $T RDRnn command explains how to ensure the proper MVS system command group authority is assigned.

This command requires **control** security access authority. For a description of assigning command input authority, see *z/OS JES2 Initialization and Tuning Guide* .

Processing Considerations

The $ACTIVATE command expands the JES2 checkpoint to enable functions introduced in z/OS.

JES2 will reject the $ACTIVATE command if:

- Either CKPT1 or CKPT2 is not accessible;
- Either CKPT1 or CKPT2 is too small to accommodate the number of 4K pages in the resulting checkpoint;
- For LEVEL=z2, all active members of the MAS are not at the release level being activated or higher.
- A member is considered active if it is defined and not drained and not initializing.

For level=r4; This command may fail because JES2 is using resources that are not supported in R4 mode.

1. At least one job has a job number above 65534.
2. At least one job has a JOE whose offset is too large.
3. At least one job has a JQE offset whose offset is too large.
4. JOBDEF RANGE= is above 65534.

The offending Jobs must be removed from the system for the $ACTIVATE LEVEL=R4 to succeed.

Scope

MAS-Wide. The command is in effect across the entire MAS.

Messages

The $HASP895 displays the new level of active function.

The $HASP003 or $HASP443 messages indicate that all new function could not be activated.

The $HASP296 message displays the amount of space that must be added to the JES2 checkpoint in order to process the command.

Examples

1
```
$activate, LEVEL=R4

$HASP895 JES2 CHECKPOINT LEVEL IS NOW OS/390 RELEASE 4 OR LATER
```

JES2 activates the OS/390 release 4 function.

2
```
$activate, LEVEL=z2

$HASP296 MEMBER IBM1 -- CKPT1 SYS1.JESCKPT1 ON J2CKPT - SPACE
 INSUFFICIENT -- 18 TRACKS NEEDED
$HASP003 RC=(74),CURRENT CHECKPOINT DATA SETS ARE TOO SMALL
$HASP895 JES2 CHECKPOINT LEVEL IS NOW PRE-OS/390 RELEASE 4
```

JES2 is unable to activate the z/OS 1.2 function because the size of the current CKPT1 data set is too small by 18 tracks. The $HASP895 message indicates that the checkpoint level has remained at the OS/390 release 4 level.

3
```
$activate, LEVEL=z2

$HASP895 JES2 checkpoint level is now z/OS 1.2.
```

JES2 activates the z/OS 1.2 function.

$ADD APPL - Define a VTAM Application to JES2

Function

To dynamically define a VTAM application to JES2 at the specified JES2 node.

Syntax

```
►►─$ADD─APPL─┬─'appl'──────────────────────────────────────────────────►
             │                  ┌─,──────────┐
             │                  ▼            │
             └─(──┬─appl──────┬──────────┬──)─┘
                  └─'appl'────┘          │
                                         │
                  ┌─,COMPACT=compact──┐  ┌─,LINE=line──┐
►──┬─,LOGMODE=logmode──┬──┬─,LOGON=logon──┬──┬─,NODE=node──┬──┬─,REST=rest──┬──►◄
   └─────────────────────┘  └───────────────┘  └─────────────┘  └─────────────┘
```

Parameters

appl
Specifies the 1 to 8 alphanumeric or special ($, #, or @) character application name by which JES2/NJE is known to VTAM at the indicated node.

COMPACT=compact
The compaction table number (0-99) that is used for outbound compaction in communicating with this application at the specified node. Zero denotes no compaction.

Default: The value for COMPACT specified on the NODE(nnnn) initialization statement that defines the node indicated by the NODE=node parameter on this command.

LINE=line
A dedicated line used for the SNA NJE session associated with this application. Specify only when the application is inactive.

Default: 0 (No line is dedicated.)

LOGMODE=logmode
The 1 to 8 character name of the logon mode table entry that is used for this VTAM application. The parameter input must adhere to the VTAM naming conventions for a logon mode table entry name. A logon mode table entry determines which entry in the VTAM application logon mode table will be used. If the program participates as the secondary end of a session (SLU), the table entry provides a set of session parameters. This parameter is used only for NJE applications. If it is specified for non-NJE applications, the parameter is ignored. Specify only when the application is inactive.

Default: If you omit the parameter, the system uses the VTAM defaults.

LOGON=logon
Specifies the number (1-999) of the local LOGON DCT which should be used when specifying connections to the application. The default value of 0 indicates that the LOGON DCT defined with the lowest number is to be used.

NODE=node
The number (1-32767) or the 1 to 8 alphanumeric or special ($, #, or @) symbolic name (xxxxxxxx) of the node at which the JES2 application is defined to VTAM.

Note: The symbolic name must have been specified on the NAME= parameter of the NODE initialization statement for the referenced node, or must have been defined on the DESTID initialization statement.

REST=rest
An integer (0-2000), which represents the resistance rating of the connection as viewed by the installation manager and coordinated with other installations. For information about selecting resistances, see *z/OS JES2 Initialization and Tuning Guide*.

Default: The value for REST specified on the NODE(nnnn) initialization statement that defines the node indicated by the NODE=nnnn parameter on this command.

Authority Required

This command requires **system** authority. The description of the $T RDRnn command explains how to ensure the proper MVS system command group authority is assigned.

This command requires **control** security access authority. For a description of assigning command input authority, see *z/OS JES2 Initialization and Tuning Guide*.

Processing Considerations

When you dynamically define JES2 as an application to VTAM, its specifications are not checkpointed and are not carried across a restart of JES2. If you want to permanently define the new application, you must add a new APPL initialization statement before restarting JES2.

Scope

Single Member. The values supplied for this command will be in effect for this member only.

Depending on your installation's setup, however, you might want this command to be applied to all members of the MAS (to ensure a consistent environment across the MAS). If so, you can use the MVS ROUTE *ALL command to issue this command to all active members (if the JES2 command character is the same on all members). See *z/OS MVS System Commands* for more information on using the ROUTE *ALL command.

Messages

The $HASP821 message displays the current values of all the parameters that define this application.

Example

```
1 $add appl(jesc),node=33

  $HASP821 APPL(JESC) NODE=33,COMPACT=0,LINE=0,LOGMODE=0,
  $HASP821            LOGON=0, REST=0
```

The application named JESC is known to VTAM at node 33.

$ADD CONNECT - Dynamically Add Network Connections

Function

To add static network connections.

Syntax

```
►►──$ADD──CONNect──┬──────────────────────────────┬──┬──────────────┬──┬──────────────────────────────────────────────────►
                   └─,PATHMGR=──┬─No────────┬──┘  └─,REST=rest─┘  └─,──┬──┬─MA──────────┬──=──membera──┘
                                ├─RESET─────┤                          │  └─/─┘                │
                                └─Yes───────┘                          ├──┬─MEMBA───────┤
                                                                       │  └─/─┘                │
                                                                       └──┬─MEMBERA─────┘
                                                                          └─/─┘

►──┬──────────────────────────────────────────────────────────────────────────────────────────────────────────────────►
   └─,──┬──┬─MB──────────┬──=──memberb──┘  └─,──┬──┬─NA──────────┬──=──nodea──┘
        │  └─/─┘          │                     │  └─/─┘          │
        ├──┬─MEMBB───────┤                     └──┬─NODEA───────┘
        │  └─/─┘          │                        └─/─┘
        └──┬─MEMBERB─────┘
           └─/─┘

►──┬──────────────────────────────────────────────────────────────────────────────────────────────────────────────────►◄
   └─,──┬──┬─NB──────────┬──=──nodeb──┘
        │  └─/─┘          │
        └──┬─NODEB───────┘
           └─/─┘
```

Parameters

MA|MEMBA|MEMBERA=membera
The member number at the NODEA end of the connection.

Default: The default is 1. The value for MEMBERA if NODEA is the local node must be a 1. If the member number is greater than a 1 for the local node, the command is rejected.

Note: Most supported NJE nodes require this parameter to be defaulted or set to 1. This parameter should only be used if the documentation for the NJE product on the node specified by NODEA= requires it. Improper specification of this field can cause portions of your NJE network to be unreachable. IBM recommends that you do not specify this parameter, and allow it to default.

MB|MEMBB|MEMBERB=memberb
The member number at the NODEB end of the connection.

Default: The default is 1. The value for MEMBERB if NODEB is the local node must be a 1. If the member number is greater than a 1 for the local node, the command is rejected.

Note: Most supported NJE nodes require this parameter to be defaulted or set to 1. This parameter should only be used if the documentation for the NJE product on the node specified by NODEB= requires it. Improper specification of this field can cause portions of your NJE network to be unreachable. IBM recommends that you do not specify this parameter, and allow it to default.

NA|NODEA=nodea
Specifies the 1 to 8 alphanumeric or special ($, #, or @) character symbolic

node name (xxxxxxxx) or node number (nnnn) at one end of the connection. The name must match the NAME= parameter of the NODE initialization statement for the referenced node. The node number must be less than the NODENUM= parameter of the NJEDEF statement.

Note: NODEA and NODEB may appear in any order when defining a static connection, that is NODEA does not have to be your node or the other end. When JES2 resolves the static connection, the order may be different than what was entered on the command when you issue a $DCONNECT. This is because the node with the smallest number will always be assigned to NODEA. The end result is the same.

NB|NODEB=nodeb
Specifies the 1 to 8 alphanumeric or special ($, #, or @) character symbolic node name (xxxxxxxx) or node number (nnnn) at one end of the connection. The name must match the NAME= parameter of the NODE initialization statement for the referenced node. The node number must be less than the NODENUM= parameter of the NJEDEF statement.

Note: NODEA and NODEB may appear in any order when defining a static connection, that is NODEA does not have to be your node or the other end. When JES2 resolves the static connection, the order may be different than what was entered on the command when you issue a $DCONNECT. This is because the node with the smallest number will always be assigned to NODEA. The end result is the same.

PATHMGR={No|RESET|Yes}
Indicates whether this connection supports path manager type protocols. PATHMGR=RESET indicates that the value of PATHMGR= should be reset to the default.

Default: The default depends on the specifications for the NODEA= and NODEB= parameters.

- If either node is defined as PATHMGR=NO, the default is PATHMGR=NO. You can sign on to JES3 or VM.
- If both nodes are defined as PATHMGR=YES, the default is PATHMGR=YES.

  Note: This static connection has a resistance of 30.

REST=rest
An integer (0-8000) that represents the resistance rating of the connection as viewed by the installation manager and coordinated with other installations. For information about selecting resistances, see *z/OS JES2 Initialization and Tuning Guide*.

Authority Required

This command requires **system** authority. The description of the $T RDRnn command explains how to ensure the proper MVS system command group authority is assigned.

This command requires **control** security access authority. For a description of assigning command input authority, see *z/OS JES2 Initialization and Tuning Guide*.

Scope

Single Member. The values supplied for this command will be in effect for this member only.

Depending on your installation's setup, however, you might want this command to be applied to all members of the MAS (to ensure a consistent environment across the MAS). If so, you can use the MVS ROUTE *ALL command to issue this command to all active members (if the JES2 command character is the same on all members). See *z/OS MVS System Commands* for more information on using the ROUTE *ALL command.

Messages

The $HASP815 message is issued in response to this command.

Example

```
1  $ADD CONNECT, NODEA=PHOENIX, MEMBA=1,
NODEB=TUCSON, MEMBB=2, REST=30
```

This example adds a static connection between member 1 at PHOENIX and member 2 at TUCSON.

$ADD DESTID - Define a Symbolic Destination

Function

To dynamically define a symbolic name for a JES2 route code.

Use the $D DESTID command to view the actual destination for a destid.

Notes:

1. None of the route codes specified on the DEST= of this command are affected by the DESTDEF initialization statement or the $T DESTDEF command.
2. If any parameters on the DESTDEF initialization statement specify USER and multiple destids can match the routing, then at least one of these multiple destids must specify PRIMARY=YES.

   If installations do not specify PRIMARY=YES, application products such as SDSF can have problems altering the routing of a job or SYSOUT data set to that of the multiply defined destids.

Syntax

```
►►─$ADD─DEStid─┬─'xxxxxxxx'──────────────────────────────────────────────────────────────────────►◄
               │                                                                                  │
               │                                                                                  │
               │                                                                                  │
```

LOCAL|ANYLOCAL|Rmmmm|RMmmmm|RMTmmmm|Ummmm|userid
References only the destination at a node (second-level destinations).

When these destids are referenced, users must specify either an explicit first-level destination or allow JES2 to assign a default first-level destination. JES2 determines the first-level portion of the destination from one of the following:

- /*ROUTE PRT JES2 control statement
- /*ROUTE PUN JES2 control statement
- The output route code associated with the device through which the job entered the system.

For example, DESTID(REMOTE5),DEST=R5 defines a second-level destination. Using the destids DESTID(NYCAP) DEST=ALBANY and DESTID(NYCAP) DEST=N10 as specified on DESTID(jxxxxxxx) initialization statements, JCL can route a data set to R5 at N10 by specifying DEST=NYCAP.REMOTE5.

However, if the JCL only specifies DEST=REMOTE5, the nodal portion of the destination is obtained from the default routing of the job. (A job submitted from N10 without any /*ROUTE JES2 control statements has a default nodal routing of N10, regardless of where in the network it executes.)

Valid destinations:

LOCAL|ANYLOCAL
Data is not associated with any specific routing.

Rmmmm|RMmmmm|RMTmmmm
Specify R, RM, or RMT, followed by a numeric value (0-32767). For example, ‘R17’ represents remote work station 17.

Ummmm
Specify U followed by a numeric value in the range of 1 through the value specified on the LOCALNUM= parameter of the DESTDEF initialization statement. For example, ‘U19’ represents special local routing 19.

Use the LOCALNUM= parameter on the DESTDEF initialization statement to specify the highest number for a special local route code. JES2 assumes that numbers beyond this range are userids.

userid Specify a 1 to 8 character string that is interpreted on the destination node. For example, the string ‘TANYA’ represents a userid (assuming that there are no destids that define TANYA at the destination node).

When specifying both the node and a destination at that node (first and second level destinations):

NnnnnRmmmm|node.destination
Allows an installation to define the complete JES2 route code (destination at a specified node). JES2 does not use information from the default routing.

NnnnnRmmmm
Specify ‘N’ followed by a numeric value (1-32767), then ‘R’ followed by a numeric value (0-32767). For example, N5R7 indicates remote 7 at node 5.

node.destination
Specify a first-level destination, followed by a period (.), followed by either a second-level destination or a complete destination.

If ‘destination’ is a second-level destination, the routing associated with this destid is the composite of ‘node’ and ‘destination’.

For the following examples, assume that node 1 is the local node:

- ‘N1.R3’ indicates data routed to remote 3 at the local node.
- ‘N2.R5’ indicates data routed to whatever ‘R5’ is at node 2.
- ‘N5.BOB’ indicates data is routed to whatever ‘BOB’ is at node 5.

If ‘destination’ is a complete destination, the final routing associated with this destid depends on ‘node’.

For the following examples, assume that node 1 is the local node:

- ‘N2.N2R3’ indicates data routed to remote 3 at node 2 because the first-level destination of ‘destination’ matches ‘node’.
- ‘N5.N2R3’ indicates data routed to ’N2R3’ at node 5 because the first-level destination of ‘destination’ does not match ‘node’ and ‘node’ is not the local node. If node 5 has not explicitly defined ‘N2R3’, node 5 routes the data to destination ‘R3’ at node 2.
- ‘N1.N5R3’ results in an error because the first-level destination of ‘destination’ does not match ‘node’ and ‘node’ is the local node.

Note that you can use existing destids to define additional destids. For example, assume that the following destids have been defined through the DESTID(jxxxxxxx) initialization statement:

```
DESTID(ALBANY)  DEST=N10
DESTID(REMOTE5) DEST=R5
```

You can define on the $ADD DESTID(jxxxxxxx) command:

```
DESTID(CAPITOL),DEST=ALBANY.REMOTE5
```

The routing associated with ‘CAPITOL’ is N10.R5.

PRIMARY={No|Yes}
Specifies whether (YES) or not (NO) to display this destid for job and SYSOUT routing. Use this parameter if multiple destids have the same routing.

When searching for a destid to display for a job’s or SYSOUT’s routing, JES2 selects:

1. Node name (destid with STATUS=NODENAME) if routed to a node.
2. First destid found that specifies PRIMARY=YES.

3. If only one destid is found, that destid is used.
4. If multiple destids are found, no destid is used (and routing is displayed explicitly).

If USER is specified for either the Ndest=, Udest=, or R|RM|RMTdest= parameters on the DESTDEF initialization statement and multiple destids can match the routing of a job or SYSOUT data set, then at least one of these multiple destids must specify PRIMARY=YES. If not, products such as SDSF may have problems altering the routing of a job or SYSOUT data set to any of these multiply defined destids.

Because PRIMARY=YES can affect SDSF's security procedures, consult *SDSF Guide and Reference* before using this parameter.

Authority Required

This command requires **system** authority. The description of the $T RDRnn command explains how to ensure the proper MVS system command group authority is assigned.

This command requires **control** security access authority. For a description of assigning command input authority, see *z/OS JES2 Initialization and Tuning Guide*.

Processing Considerations

When you dynamically define a JES2 symbolic destination (destid), JES2 carries it across a restart only if you perform a hot start. To permanently define the symbolic destination, add a new DEStid initialization statement before restarting JES2.

Scope

Single Member. The values supplied for this command will be in effect for this member only.

Depending on your installation's setup, however, you might want this command to be applied to all members of the MAS (to ensure a consistent environment across the MAS). If so, you can use the MVS ROUTE *ALL command to issue this command to all active members (if the JES2 command character is the same on all members). See *z/OS MVS System Commands* for more information on using the ROUTE *ALL command.

Messages

The $HASP822 message displays the current values of all the parameters that define this DEStid. The STATUS= parameter displays whether the DEStid is associated with a particular node. This parameter cannot be altered by command or initialization statement because it is display-only.

Examples

1 `$add destid(wrk1),dest=u34,primary=yes`

```
$HASP822 DESTID(WRK1)      DEST=U34,STATUS=DESTID,PRIMARY=YES
```

JES2 adds destination identifier WRK1 with a special local routing of U34 to the installation. The STATUS= parameter displayed in the $HASP822 message indicates that the symbolic name WRK1 does not match the name of a node. This parameter cannot be altered by command or initialization statement because it is

display-only. The PRIMARY= parameter indicates that this destid is displayed for all job and SYSOUT routing, even if another destid is routed to special local routing 34 at this installation.

2 `$add destid(r0007),dest=R7`

```
$HASP822 DESTID(REMOTE7)     DEST=R7,STATUS=DESTID,PRIMARY=NO
```

JES2 adds destination identifier REMOTE7 with a destination of R7 to the installation. The STATUS= keyword displayed in the $HASP822 message indicates that the symbolic name REMOTE7 does not match the name of a node. The PRIMARY= keyword displayed in the $HASP822 message indicates that JES2 will display a destination of R7 (D=R7) rather than the actual destid subscript (REMOTE7) in any display of SYSOUT routed to this destination.

$ADD FSS - Define a Functional Subsystem

Function

To dynamically define a functional subsystem (FSS) to JES2.

Syntax

```
►►─$ADD──┬─FSS────┬──┬─'acccccc'──────────────────────────────────────────────────────►
         └─FSSDef─┘  │                │ └─,AUTOstop=─┬─No──┬─┘ │ └─,HASPFSSM=─┬─HASPFSSM─┬─┘
                     │ ┌──────────────┐ │              └─Yes─┘   │              └─acccccc──┘
                     └─(─┬─acccccc──┬─┬─)─┘
                         └─'acccccc'─┘
►─┬─────────────────────────────────────────────────────────────────────────────────────►◄
  └─,PROC=acccccc─┘
```

Parameters

acccccc
The 1 to 8 character name of this functional subsystem (FSS).

AUTOstop={No|Yes}
Specifies whether or not JES2 is to automatically stop (shutdown) the FSS address space when all devices attached to the FSS are drained.

HASPFSSM={HASPFSSM|acccccc}
The 1 to 8 character name of the load module that is loaded into the functional subsystem address space. This load module contains the various JES2-supplied FSI service routines.

PROC=acccccc
The 1 to 8 character name of the JCL procedure (usually in SYS1.PROCLIB) required to start the functional subsystem.

Default: The value specified as the FSS token (acccccc).

Authority Required

This command requires **system** authority. The description of the $T RDRnn command explains how to ensure the proper MVS system command group authority is assigned.

This command requires **control** security access authority. For a description of assigning command input authority, see *z/OS JES2 Initialization and Tuning Guide*.

Processing Considerations

When you dynamically define an FSS to JES2, its specifications are carried across a restart of JES2 only if you perform a hot start. To permanently define the functional subsystem, add a new FSS initialization statement before restarting JES2.

Scope

Single Member. The values supplied for this command will be in effect for this member only.

Depending on your installation's setup, however, you might want this command to be applied to all members of the MAS (to ensure a consistent environment across

the MAS). If so, you can use the MVS ROUTE *ALL command to issue this command to all active members (if the JES2 command character is the same on all members). See *z/OS MVS System Commands* for more information on using the ROUTE *ALL command.

Messages

The $HASP824 message displays the current values of all the parameters that define this functional subsystem.

Example

```
1  $add fss(myfss),proc=start1

$HASP824  FSS(MYFSS) PROC=START1,HASPFSSM=HASPFSSM,AUTOSTOP=NO
```

The functional subsystem named MYFSS is defined to JES2.

$ADD LINE(nnnn) - Add Line

Function

To dynamically add a line.

Syntax

```
►►─$ADD──┬─LINE─┬──┬─nn──┬──────┬──┬──────────────────────────────────────────────►
         └─LNE──┘  │     └─-─┬mm┬─┘  │                                              │
                   │         └*─┘    │                                              │
                   │   ┌──────────┐  │                                              │
                   │   ▼          ┌─┴─┐                                            │
                   └─(────┬nn┬──┬──┬──┬──┬──────────────────────────────────────────►
                          └*─┘  │  └─-─┬mm┬─┘  │                                    │
                                │      └*─┘    │                                    │
                                └──────────────┘                                    │
                                                                                    │
                                                                                    │
                                                
```

B Specifies code B for this line. Code B refers to the second code in a BSC adapter that has the dual code features. If the dual code feature is not present, B should not be specified. See *2701 Data Adapter Unit Component Description* , GA22-6864 for information about BSC CCWs and sense codes.

COMPRESS={No|Yes}
For RJE workstations only, specifies whether (Yes) or not (No) BSC hardware terminals attached to this line can utilize data compression. If you specify NO, it overrides the specification of the COMPRESS= parameter on the RJE workstation (RMT(nnnn)) initialization statement for any workstation that might use this line and any remote device statement. Compression compatibility is standard for BSC multileaving workstations.

If you specify COMPRESS=Yes, the specification of the COMPRESS= parameter on the RMT(nnnn) and the COMP parameter on the remote device (Rnnnn.xxx) statements is allowed to take effect. IF RMT(nnnn) specifies COMPRESS=No, or Rnnnn.xxx specifies NOCOMP, no compression will take place.

This parameter defaults to Yes, which specifies that the line allows data compression.

DUPLEX={FULL|HALF}
Specifies whether this is a full-duplex (FULL) or half-duplex (HALF) line.

INTERFAC={A|B}
A specifies interface A for this line; interface A refers to the first interface in a BSC adapter that has the dual-communications interface feature. B specifies interface B for this line; interface B refers to the second interface in a BSC adapter that has the dual-communications interface feature. If the adapter for this line does not have the dual-communications interface feature, B should not be specified.

JRNUM=n|DEFAULT
Specifies the number (0-7) of network job receivers to be associated with this NJE line. The value of n is an integer that specifies the maximum number of input job streams allowed to be concurrently active on this line. This specification should match the value of JTNUM for this line on other nodes with which this node is to communicate directly. The sum of the values of JRNUM and SRNUM for this line must not exceed 8, or the statement is ignored.

This value overrides the default global value set by the JRNUM= parameter of the NJEDEF statement. If this value is omitted or set to DEFAULT, the value is taken from the JRNUM= parameter of NJEDEF. If omission or use of DEFAULT would result in a sum of JRNUM= and SRNUM= exceeding 8, JRNUM= is reduced so that the sum would equal 8.

Default: Value of the JRNUM= parameter of NJEDEF.

Modification: Hot start.

JTNUM=n|DEFAULT
Specifies the number (0-7) of network job transmitters to be associated with this NJE line. The value of n is an integer that specifies the maximum number of output job streams allowed to be concurrently active on this line. This value should remain unchanged unless it is known that a particular user has some jobs with extremely large amounts of input to be transmitted and other short jobs that must be transmitted concurrently. If there are not enough receivers on the receiving node to receive jobs over the line, excess transmitters drain

automatically. The sum of the values JTNUM= and STNUM= for this line must not exceed 8, or the statement is ignored.

This value overrides the default global value set by the JTNUM= parameter of the NJEDEF statement. If this value is omitted or set to DEFAULT, the value is taken from the JTNUM= parameter of NJEDEF. If omission or use of DEFAULT would result in a sum of JTNUM= and STNUM= exceeding 8, JTNUM= is reduced so that the sum would equal 8.

Default: Value of the JTNUM= parameter of NJEDEF.

Modification: Hot start.

LINECCHR={EBCDIC|USASCII}
USASCII specifies that the BSC adapter is configured for ASCII line-control characters. When USASCII is specified, this line must be used with 2770, 2780, or 3780 USASCII terminals. EBCDIC specifies that the BSC adapter is configured for EBCDIC line-control characters.

LOG={No|Yes}
Specifies whether (Yes) or not (No) JES2 is to monitor this line for channel-end completions or SNA events. If you specify LOG=Yes, JES2 issues $HASP094 message for every transmission across this BSC line. You should specify LOG=No if your installation performs extensive networking activity.

Password=password
Specifies a 1 to 8 character security password JES2 uses to prevent unauthorized terminal users from using this line. This password can be used in the connection request from RJE workstations.

If you do not specify a password, one does not exist.

REST=rest
Specifies an integer between 0 and 2000 which represents the resistance rating of the line as viewed by the installation management and coordinated with other installations. Resistance is an arbitrary value set to indicate a specific line's ability/inability to route work due to "normal" workload requirements and line speed. Refer to *z/OS JES2 Initialization and Tuning Guide* for details concerning resistance selection.

SPEED={HIGH|LOW}
Specifies whether this is a high-speed (greater than 9600 bits per second) or low-speed line.

Note: This parameter is only applicable to 360/20 submodels 2 and 4.

SRNUM=n|DEFAULT
Specifies the number (0-7) of network SYSOUT receivers to be associated with this NJE line. The value of n is an integer which specifies the maximum number of SYSOUT receiver streams allowed to be concurrently active on this line. This specification should match the value of STNUM= for this line on the other nodes with which this member is to communicate directly. The sum of the values JRNUM= and SRNUM= for this line must not exceed 8, or the statement is ignored.

This value overrides the default global value set by the SRNUM= parameter on the NJEDEF statement. If this value is omitted or set to DEFAULT, the value is taken from the SRNUM= parameter of NJEDEF. If omission or use of DEFAULT would result in a sum of SRNUM= and JRNUM= exceeding 8, SRNUM= is reduced so that the sum would equal 8.

Default: Value of the SRNUM= parameter of NJEDEF.

Modification: Hot start.

STNUM=n|DEFAULT
Specifies the number (0-7) of network SYSOUT transmitters which will be associated with this NJE line. The value of n is an integer which specifies the maximum number of SYSOUT transmitter streams allowed to be concurrently active on this line. If there are not enough receivers on the receiving node to receive SYSOUT data over the line, excess transmitters drain automatically. The sum of the values JTNUM= and STNUM= for this line must not exceed 8, or the statement is ignored.

This value overrides the default global value set by the STNUM= parameter of the NJEDEF statement. If this value is omitted or set to DEFAULT, the value is taken from the STNUM= parameter of NJEDEF. If omission or use of DEFAULT would result in a sum of STNUM= and JTNUM= exceeding 8, STNUM= is reduced so that the sum would equal 8.

Default: Value of the STNUM= parameter of NJEDEF.

Modification: Hot start.

TRaceio={No|Yes}
Specifies whether (Yes) or not (No) trace ID 4 will trace channel-end completions for BSC lines on VTAM® lines and JES2/VTAM interface events, and trace IDs 21 through 24 will trace network control connect (NCC) records.

TRANSPAR={No|Yes}
Specifies whether (Yes) or not (No) the text transparency feature of the BSC adapter is present on this line. Yes must be specified for NJE lines.

TRANSPAR=No is valid only for EP links generated to operate as a D/T2701 without the transparency feature. For device types which require the transparency feature, such as 2703 and CTC, specifying TRANSPAR=NO will have no effect and TRANSPAR=YES will be forced at initialization.

UNIT=unit
UNIT can be specified as one of the following:

- A 3- or 4-digit hexadecimal device number. Device numbers can be specified in any of the following formats:

  ```
  UNIT=hhh
  UNIT=hhhh
  UNIT=/hhh
  UNIT=/hhhh
  ```

  where hhh and hhhh represent the device numbers.

  A slash (/) can optionally precede the device number (for compatibility with other initialization statements that require a slash to denote a 4-digit device number).
- For RJE BSC lines, specify the device number as the same address that you specified for the subchannel address defined for the communication controller.
- NJE protocols support an ESCON® Basic Mode CTC (defined to the hardware configuration dialog as BCTC) and a 3088 CTC but do not support an ESCON CTC (defined to the hardware as SCTC).

Authority Required

This command requires **device** authority. The description of the $T RDRnn command explains how to ensure the proper MVS system command group authority is assigned.

This command requires **control** security access authority. For a description of assigning command input authority, see *z/OS JES2 Initialization and Tuning Guide*.

Scope

Single Member. The values supplied for this command will be in effect for this member only.

Messages

The $HASP879 message displays the status of the specified RJE workstation.

Example

```
1  $add line125,unit=sna

$HASP880 LINE125     UNIT=SNA,STATUS=DRAINED,COMPRESS=YES,
$HASP880             LOG=NO,PASSWORD=(NOTSET),REST=0,
$HASP880             RMTSHARE=YES,SESSIONS=,TRACEIO=NO,
$HASP880             JRNUM=DEFAULT,JTNUM=DEFAULT,SRNUM=DEFAULT,
$HASP880             STNUM=DEFAULT
```

SNA line 125 is defined to JES2.

$ADD LOGON (nn) - Add a Logon

Function

Creates a new LOGON pseudo-device, which defines JES2 as an application program to VTAM.

Syntax

```
►►──$ADD──┬─LGN──┬──┬─nn──┬──────────┬──┬──────────────────────────────────────────────────►
          └─LOGON─┘  │     └─-──┬─mm─┬─┘  │                                                  │
                     │          └─*──┘    │                                                  │
                     │                    │                                                  │
                     │   ┌──────────────┐ │                                                  │
                     │   ▼              │ │                                                  │
                     └──(──┬─nn──┬──┬─-──┬─mm─┬─┬──)──┘                                        │
                           └─*───┘  │    └─*──┘ │                                             │
                                    │           │                                             │
                                    └───────────┘                                             │
                                                                                              │
                                                                                              │
                                                                                              
```

Authority Required

This command requires **device** authority. The description of the $T RDRnn command explains how to ensure the proper MVS system command group authority is assigned.

This command requires **control** security access authority. For a description of assigning command input authority, see *z/OS JES2 Initialization and Tuning Guide*.

Scope

Single Member. The values supplied for this command will be in effect for this member only.

Messages

The $HASP881 message displays the current status of all the parameters that define this LOGON.

Example

```
1  $add logon4,appl=jes2n2

$HASP881 LOGON4
$HASP881 LOGON4     APPLID=JES2N2,STATUS=DRAINED,LOG=NO,
$HASP881            PASSWORD=(NOTSET),SESSIONS=,TRACEIO=NO
```

LOGON 4 is defined to JES2.

$ADD PROCLIB(xxxxxxxx) - Define a New Dynamic PROCLIB Concatenation

Function

The $ADD PROCLIB(xxxxxxxx) command defines a dynamic PROCLIB concatenation to be used during conversion processing for jobs on this member. Dynamic PROCLIB can override PROCxx DDs in the JES2 start PROC but cannot alter nor delete them.

Syntax

```
►►─$ADD─PROClib─┬─'proclib'──────────────────────────────────────►
                │   ┌──────────────────────────────────────┐
                │   ▼                                      ,│
                └─(──┬─proclib──────────┬──┬──────────────────┬─)─┘
                     ├─'proclib'────────┤  ├─-proclib─────────┤
                     └─*────────────────┘  ├─-'proclib'──────┤
                                           └─-*──────────────┘

►─┬─────────────────────────────────────────────────────────►◄
  └─┤ Modification keywords ├─┘
```

Modification keywords:

```
├──┬──────────────────────────────────────────────────────►
   │                                   ┌──────────────────┐
   │                                   ▼                 ,│
   └─,DD─┬─nn─┬──────────┬─────────────┬─=(──┬─DSName=dsname─┬─)─┘
         │    └─-──┬─mm─┬─┘             │     ├─UNIT=unit─────┤
         │         └─*──┘               │     └─VOLser=volser─┘
         │   ┌──────────────────────┐   │
         │   ▼                     ,│   │
         └─(──┬─nn─┬──┬──────────┬─)─┘   │
              └─*──┘  └─-──┬─mm─┬─┘     │
                           └─*──┘       │

►─┬─────────────────────────────────────────────────────────┤
  └─,─┘
```

Parameters

(xxxxxxxx)
Specifies the 1-8 character PROCLIB DD name being defined. If a dynamic PROCLIB already exists with this name, the command will fail. DD names of the form PROCxx can be referenced by the JOBCLASS PROCLIB= statement. DD names of any format can be referenced on the JECL /*JOBPARM PROCLIB=ddname statement. If this name matches a DD name in the JES2 start PROC, then this PROCLIB concatenation will be used instead of the one in the JES2 start PROC.

DD(nnn)=
Specifies up to 255 data sets to be concatenated to this PROCLIB DD name. Data sets in this list are compacted after the $ADD command is processed. If you specify DD(1), DD(20), and DD(100) for a new PROCLIB concatenation, the resulting concatenation will have DD(1), DD(2) and DD(3). Though up to

255 data sets can be specified, MVS rules limit any data set concatenation to 255 extents. If any data set has more than one extent, then the total number of data sets that can be supported will be reduced.

DSName=jxxx,,,x
Specifies a 1-44 character data set name which JES2 will include in this PROCLIB concatenation. This must specify a partitioned data set (PDS).

UNIT=hhhh|/hhhh|nnnn|cccccccc
If the PROCLIB data set to be used is not cataloged, then the unit information for the device containing the data set must be specified in one of the following ways:

hhhh | /hhhh
specifies a 3 or 4 digit hexadecimal device number. Device numbers can be specified by any of the following formats:

- UNIT=hhh
- UNIT=/hhh
- UNIT=/hhhh

where hhh and hhhh represent the device numbers. A slash (/) must precede a 4 digit device number.

nnnn
Specifies a device name.

cccccccc
Specifies a 1 to 8 character group name assigned to the device or group of devices that contained the non-cataloged PROCLIB data set to be used.

VOLser=xxxxxx
If the PROCLIB data set to be used is not cataloged, then this specifies a 1 to 6 character volume serial number on which the data set resides.

UNCONDitional
Specifies what action should be taken if one of the data sets cannot be allocated. If UNCONDitional is not specified then if any data set cannot be allocated, the $ADD command is failed. If UNCONDitional is specified, then an error allocating a singe data set is ignored. The data set is not added to the concatenation but it remains assigned to the DD(nnn). If the concatenation is displayed, failed DD(nnn) will display the text 'ALLOCATION FAILED' before the data set name. If all the data sets in a concatenation fail to allocate, then the $ADD command fails regardless of whether UNCONDitional was specified.

Authority Required

This command requires **system** authority. The description of the $T RDRnn command explains how to ensure the proper MVS system command group authority is assigned.

This command requires **control** security access authority. For a description of assigning command input authority, see *z/OS JES2 Initialization and Tuning Guide*.

Processing Considerations

$ADD PROCLIB command processing only ensures that the data sets specified can be allocated. It does not ensure that they actually exist or can be opened and used as a PROCLIB data set. That processing occurs when the PROCLIB is used by a job during conversion processing.

Scope

Single Member. The values supplied for this command will be in effect for this member only.

Depending on your installation's setup. however, you might want this command to be applied to all members of the MAS (to ensure a consistent environment across the MAS). If so, you can use the MVS ROUTE *ALL command to issue this command to all active members (if the JES2 command character is the same on all members). See *z/OS MVS System Commands* for more information on using the ROUTE *ALL command.

Messages

The HASP319 message displays the current PROCLIB concatenation.

The HASP003 RC=56 indicates that you are trying to add a PROCLIB concatenation but it already exists.

The HASP003 RC=91 indicates that the command failed because there was an allocation failure. In this case, additional IKJ message will be issued to describe the allocation error.

Example

1

```
$add proclib(proc01),dd1=dsn=sys1.proclib,dd2=dsn=test.proclib
$HASP319 PROCLIB(PROC01)    DD(1)=(DSNAME=SYS1.PROCLIB),
$HASP319                    DD(2)=(DSNAME=TEST.PROCLIB)
```

Add a new PROCLIB concatenation PROC01 with 2 data set SYS1.PROCLIB and TEST.PROCLIB

2

```
$add proclib(proc02),dd1=dsn=sys1.proclib,dd2=dsn=junk.proclib,uncond
IKJ56228I DATA SET JUNK.PROCLIB NOT IN CATALOG OR CATALOG CAN NOT BE ACCESSED
$HASP319 PROCLIB(PROC02)    DD(1)=(DSNAME=SYS1.PROCLIB),
$HASP319                    DD(2)=(ALLOCATION FAILED,
$HASP319                    DSNAME=JUNK.PROCLIB)
```

Add a new PROCLIB concatenation with one data set, JUNK.PROCLIB, that does not exist but UNCOND was specified. In this case, the PROC02 DD is an available PROCLIB with only one active data set

3

```
$add proclib(proc99),dd100=dsn=sys1.proclib,dd200=dsn=test.proclib
$HASP319 PROCLIB(PROC99)    DD(1)=(DSNAME=SYS1.PROCLIB),
$HASP319                    DD(2)=(DSNAME=TEST.PROCLIB)
```

This example shows how DD(nnn) is compressed to form a dense list.

$ADD PRT - Define a Local Printer

Function

To dynamically add a local printer.

Syntax

```
►►─$ADD──┬─PRINTER─┬──┬─nnnn──┬──────────┬──┬──────────────────────────────────►
         └─PRT─────┘  │       └─-─┬─nnnn─┬─┘  │
                      │           └─*────┘    │
                      │   ┌──────────────────┐│
                      │   ▼                  │
                      └─(─┬─nnnn─┬──┬──────┬─┬─)─┘
                          └─*────┘  └─-─┬─nnnn─┬─┘
                                        └─*────┘

►──┬──────────────────┬──┬──────────────────┬──┬──────────────────────────────►
   └─,Burst=─┬─No──┬─┘  └─,CKPTLINE=nnnnn─┘  └─,CKPTMODE=─┬─PAGE─┬─┘
             └─Yes─┘                                     └─SEC──┘

►──┬──────────────────┬──┬──────────────────┬──┬──────────────────────────────►
   └─,CKPTPAGE=nnnnn─┘  └─,CKPTSEC=ttttt───┘  └─,COPYMARK=─┬─CONSTANT─┬─┘
                                                           ├─DATASET──┤
                                                           ├─DEFAULT──┤
                                                           └─JOB──────┘

►──┬──────────────────┬──┬──────────────────────────┬──┬──────────────────────►
   └─,CReator=jccccccc─┘  └─,DEVFCB=─┬─xxxx──┬─┘  └─,DEVFLASH=name─┘
                                     └─RESET─┘

►──┬──────────────────────────┬──┬──────────────────────┬──────────────────────►
   └─,─┬─C───┬─=─┬─id────┬─┘  └─,─┬─FLASH─┬─=name─┘
       └─FCB─┘   └─RESET─┘         └─O─────┘

►──┬──────────────────────────────────┬──┬──────────────────────────────────►
   └─,Forms=─┬─cccccccc──────────────┬─┘  └─,FSS=acccccccc─┘
             │   ┌──────────────────┐│
             │   ▼ (1)              │
             └─(─────cccccccc───────┬─)─┘

►──┬──────────────────────┬──┬──────────────────────────┬──┬──────────────────►
   └─,JOBname=jobname─────┘  └─,LIMit=─┬─m──────────┬─┘  └─,Mark=─┬─────┬─┘
                                       └─(─m─┬─────┬─)─┘             ├─No──┤
                                             └─,n──┘                 └─Yes─┘

►──┬──────────────────┬──┬──────────────────────────┬──┬──────────────────────►
   └─,MODE=─┬─FSS─┬─┘  └─,NEWPAGE=─┬─ALL─────┬─┘  └─,NPRO=tttt─┘
            └─JES─┘                ├─DEFAULT─┤
                                   └─1───────┘

►──┬──────────────────────────┬──┬──────────────────────────┬──┬──────────────►
   └─,Pause=─┬─────┬─┬─No──┬─┘  └─,PLIM=─┬─m──────────┬─┘  └─,PRESELCT=─┬─No─┬─┘
             ├─No──┤ └─Yes─┘              └─(─m─┬─────┬─)─┘                └─Yes─┘
             └─Yes─┘                            └─,n──┘
```

$ADD PRT(nnnn)

```
►─┬─────────────
```

Parameters

Burst=[No|Yes]
Specifies whether the printed output from the indicated 3800 printer is to be burst into separate sheets (Y) or is to be in continuous fanfold form (N).

C|FCB={id|RESET}
Specifies the carriage tape name for the 3211, 3203 Model 5, or 1403 printer for printing this output class.

id The identifier (1-4 alphameric characters) of the tape for a printer lacking a forms control buffer (FCB) feature, or the FCB image for a printer having the FCB feature. If you specify an FCB image, it must be available in SYS1.IMAGELIB.

RESET
Specifies that a 3800 printer or a printer running under the control of a functional subsystem (FSS mode) is to construct a 6 lines per inch FCB based on the forms loaded in the printer. For any printers in FSS mode, JES2 uses the FCB specified in the PROC that starts the FSS. RESET can be used to correct the problem indicated by the $HASP180 load message.

Notes:

1. When you explicitly set the FCB= parameter for the 3800 printer, the specified value is used as the installation's default FCB image for SYSOUT data sets that do not specify the FCB= parameter through JCL.
2. If you have received the $HASP180 load error message indicating an FCB image error, specify the FCB= parameter to correct the problem.

CKPTLINE=nnnnn
The maximum number of lines (range 0-32767) in a logical page. JES2 uses this value, with the CKPTPAGE value, to determine when to take output checkpoints. The size of a logical page is also defined as the number of lines printed until:

- A channel skip is encountered.
- The line count specified by the LINECT parameter on the PRINTDEF initialization statement, the /*JOBPARM control statement, the JCL OUTPUT statement, or the JOB statement accounting field has been exceeded.

If you specify CKPTLINE=0, a logical page is defined only by the items noted above. If the LINECT value specified is greater than zero, setting CKPTLINE to a value greater than LINECT results in the LINECT value being used as the definition of a logical page; it overrides CKPTLINE.

Note: This operand is ignored if specified for a printer under the control of a functional subsystem. The functional subsystem does its own physical and logical pages checkpoint based on the CKPTPAGE and CKPTSEC values passed to it from JES2.

CKPTMODE={PAGE|SEC}
Specifies whether the functional subsystem is to take checkpoints based on page count or elapsed time.

Note: This operand is valid for printers under the control of a functional subsystem only, not those under the control of JES2.

PAGE
The functional subsystem uses the checkpointing interval specified by the CKPTPAGE operand.

SEC
The functional subsystem uses the checkpointing interval specified by the CKPTSEC operand.

Note: The installation should set the values for CKPTSEC and CKPTPAGE so they are best for the printer; then control which checkpoint method to use, either SEC or PAGE, by changing the CKPTMODE parameter.

CKPTPAGE=nnnnn
The number (1-32767) of logical pages for non-page mode printers and physical pages for page-mode printers to be printed before each output checkpoint is taken. This parameter and CKPTLINE control the amount of checkpoint activity to spool.

Notes:

1. When you use the K|SPACE=(1|2|3|R) operand for a data set that is printing on a 3800-3 printer operating in FSS mode, the forced spacing is reset either at the end of that data set, or when you issue a $TPRTnnnn,CKPTPAGE=nnnnn command while this data set is printing. If you issue the $TPRTnnnn,CKPTPAGE command and forced spacing is still desired, you must include the K=(1|2|3|R) operand.
2. The CKPTPAGE parameter should be set to a low value for slow printers and a high value for faster printers such as the 3800 to prevent the occurrence of excessive checkpoint cycles for faster devices.

CKPTSEC=ttttt
The number (0-32767) of seconds to elapse before each output checkpoint is taken. This parameter is valid only for a printer under control of a functional subsystem.

CLass|Queue=c1[...c36]
Specifies the output class(es) (A-Z, 0-9) the printer is to process. You can specify as many as 36 output classes.

COPYMARK={CONSTANT|DATASET|DEFAULT|JOB}
Specifying DATASET or JOB causes copy marks (SYSOUT separation indicator markings) to be incremented on a data set level or on a JOE level, respectively. Copy marks are not incremented when you specify CONSTANT.

Note: The COPYMARK parameter applies to FSS-controlled devices only.

CReator=jcccccccc
Specifies the 1 through 8 character userid that creates the SYSOUT data sets to be processed.

j
An alphabetic character (A-Z) or any of the special characters ($, #, or @).

ccccccc
Any combination of EBCDIC characters except a comma, a right parenthesis, or an equal sign.

DEVFCB={xxxx|RESET}
Specifies the default FCB attribute JES2 uses when FCB= is not coded in the job's JCL. (JES2 does not validate the existence of the FCB name in SYS1.IMAGELIB.) Specifying RESET sets the default FCB attribute to null.

Note: 3800 printers use the FCB specified on the PRT initialization statement.

DEVFLASH|FLASH|O=name
The 1 to 4 alphameric character name that specifies the name of the default forms FLASH ID.

Forms=cccccccc
The 1 to 8 character name of the forms that are loaded into this printer.

Note: You can specify 1 through 8 forms for local printers.

```
F=(STD1,STD2)
```

FSS=acccccccc
Specifies a 1 to 8 character functional subsystem name that supports a page-mode printer. If an FSSNAME is not defined on an FSS initialization statement, the functional subsystem name assigned on this statement will cause the generation of a default FSS initialization statement. The FSS statement then defines (by default) the FSSNAME and PROCname specified here.

Notes:

1. This parameter must be specified if MODE=FSS is specified for this PRT(nnnn) command. If this parameter is not specified, the MODE setting becomes MODE=JES.
2. You must also specify UNIT= if this PRT(nnnn) command defines a 3827 or 3835 printer.

JOBname=jobname
The 1 to 8 character name of jobs whose output is to be selected by this printer.

A null parameter of (JOBname=) specifies that jobname is not a criterion for output selection.

LIMit={m|m-n|m-*}
Specifies the lower and upper limits (in records) for the size of output that is to be selected by this printer.

For both variables *m* and *n*, you can specify a range of values from 0 through 2147483647. *m* and *n* can be equal. If they are not equal, *n* must be larger than *m*.

If you code only *m*, that value becomes both the lower and upper limit. If *m-** is specified, the upper limit is set to the default value (4294967295).

Note: If the printing of a data set is interrupted by a warm start, JES2 uses the original size of the output (prior to any printing) to determine where the remainder of the output is printed. That is, the original size of the JOE is used to determine output device selection.

Mark=[No|Yes]
Specifies for the 3800 printer whether or not the edge of the separator page is to be marked.

Note: If the printer is under control of a functional subsystem, specifying N suppresses marking on the separator page, but produces a unique mark on the carrier strip (that is, the punched, perforated page edge).

MODE={FSS|JES}
Specifies whether the printer is under control of a functional subsystem (FSS) or JES2.

Notes:

1. When a change of control mode is desired for a printer that is active (that is, output is being printed), you must wait for this printer to drain and then enter a $T PRTnnnn command. The $HASP097 message indicates when the draining process is complete. If the printer is not drained before entering this command, JES2 ignores it.
2. JES2 ignores the MODE specification if the printer was not defined as a functional subsystem device (using the FSS= parameter) on the PRTnnnn initialization statement. (If a device was mistakenly defined as being a function subsystem device, JES2 honors the MODE specification, but incorrect output results.

NEWPAGE={ALL|DEFAULT|1}
Specifies when a 'skip to channel' is counted as a new page. You can specify one of the following:

ALL
Specifies that JES2 will treat skip-to-any-channel as a new page.

DEFAULT
Specifies that the NEWPAGE specification on the PRINTDEF initialization statement will be used.

1 Specifies that JES2 will treat only skip-to-channel-one as a new page.

NPRO=tttt
Specifies the non-process runout (NPRO) time interval in seconds (0-3600). You can use this operand to control the amount of time that an FSS-controlled printer is idle with output in the paper path but not at the stacker. When the time interval expires, the functional subsystem directs the printer to force the output to the stacker. NPRO=0 specifies that a timer-based NPRO is not used.

Note: The NPRO operand has no effect on cut-sheet page printers.

Pause=[No|Yes]
Specifies whether or not the local printer is to pause between data sets. If you specify Y, you can restart the device by changing it from a not-ready to a ready state.

Note: This operand has no effect for page-mode printers that operate under the control of a functional subsystem.

PLIM={m|m-n|m-*}
Specifies the lower and upper page limits for the size of output that is to be selected by this printer.

For both variables *m* and *n*, you can specify a range of values from 0 through 2147483647. *m* and *n* can be equal. If they are not equal, *n* must be larger than *m*.

If you code only *m*, that value becomes both the lower and upper limit. If you code *m-** the upper limit is set to the default value (4294967295). This parameter is valid only when the printer is controlled by a functional subsystem.

If the printing of a data set is interrupted by a warm start, JES2 uses the original number of pages specified by the job output element and the original priority value to determine when and where the remaining output is printed.

PRESELCT={No|Yes}
Specifies whether or not JES2 preselects data sets for a device. Specifying PRESELECT=N makes data sets selectable by any device. Y is the default.

Note: The PRESELECT operand is valid only when the printer is under control of a functional subsystem.

PRMode=(mode1[,..mode8])
The SYSOUT mode(s) (1 to 8 alphameric characters) to be processed by this printer. You can specify as many as 8 SYSOUT modes for a single printer. Multiple entries must be separated by commas and the list must be enclosed in parentheses. If all processing modes are selectable by this printer, specify a null parameter of PRMODE= (). You must specify the empty parentheses.

Note: For a list of valid process-mode values, see your system programmer.

RANGE={J|S|T} nnnnn[-nnnnn]| J1-65534
Specifies the job ID range for output jobs that can be selected by this printer. Use “J” to specify batch jobs, “S” to specify started tasks, and “T” for TSO/E jobs. You can specify a single job number or range of jobs. If you code this parameter, you can specify one or two values:

- If you specify one value, that value becomes both the low and the high end of the range.
- If you specify two values, the first value is the low end of the range and the second value the high end. The two values can be equal. If they are not equal, the second value must be larger than the first value.

Routecde=routecde
Specifies up to four internal route codes to be assigned to this printer. If more than one route code is assigned, enclose the list in parentheses. For specification requirements, refer to “Route Codes” on page 92.

Note: NODENAME=REQUIRED on the DESTDEF initialization statement will cause JES2 to require that a userid be prefixed with a node name.

Ummmm
Indicates that output for special local routing is selected. The special routing numbers range from 1 to 32767.

destid
Indicates that output routed to the specified node(s) is selected. If destid is specified alone, it refers to both the node and the remote.

remote
Indicates routing to a remote. Remote can be specified in any of the following ways:

LOCAL|ANYLOCAL
Indicates that jobs are to be run at the local node.

Rnnnn
Indicates routing to the specified remote. Rnnnn can also be specified as RMnnnn or RMTnnnn. The value specified for nnnn can range from 1 to 32767.

destid Indicates routing to a destid referring to a remote.

userid Indicates routing to a valid TSO userid. Generic userids are also valid. A generic userid is a userid that ends in an asterisk (*) and refers to all userids that begin with the characters preceding the *. Note that the * can only be specified in the last position of the userid.

For more information about specifying userids as remotes, refer to “Route Codes” on page 92.

Sep=[No|Yes]
Specifies whether JES2-supplied separator pages are to be placed between output groups. If you specify N, the JESNEWS data set is not printed. If this is a remote printer, specifying N also suppresses transmission of operator messages to the remote terminal, with the exception of the $HASP190 setup message.

Notes:

1. If you specify Sep=Y, but SEPPAGE=(LOCAL=NONE) (for local printers) was specified on either the PRINTDEF initialization statement or through the $T PRINTDEF command, default JES2 separator pages are not produced.
2. If you specify Sep=Y, but SEPPAGE=(REMOTE=NONE) (for remote printers) was specified on either the PRINTDEF initialization statement or through the $T PRINTDEF command, default JES2 separator pages are not produced.
3. If you specify Sep=N, a user created page (made in Exit 1) is not suppressed.

SEPCHARS={CURRENT|DEFAULT}
Specifies the character arrangement table to use for separator pages printed on the 3800 printer. The NUICS parameter on the PRINTDEF initialization statement defines this value at system initialization.

CURRENT
Specifies use of the character arrangement table loaded in the 3800. The first character arrangement table is used if the installation default is not loaded.

DEFAULT
Specifies use of the installation default character arrangement table. If not already loaded, this parameter specifies that this table be loaded before printing the separator pages.

SEPDS=[No|Yes]
Specifies whether a header separator page is to be produced for each copy of each data set within an output group. If the printer is running under JES2, specifying Y causes JES2 to invoke an enabled EXIT 15 (output data set/copy separators) to generate separator pages. For printers under control of a functional subsystem, SEPDS is supported with a default separator page.

Note: If EXIT 15 is not enabled when you specify Y on this operand, separator pages are not generated.

SETUP={HALT|NOHALT}
Specifies whether JES2 issues the device setup message ($HASP190) after a change of device characteristics (for example, forms control).

HALT Allows the operator to verify the changes to the printer by halting the printer and issuing the setup message.

NOHALT
Allows the printer to process output without requiring setup verification by the operator. With SETUP=NOHALT, JES2 can unload any printer characteristics that require no manual intervention. The printer uses any previously existing setup characteristics that you have not changed to process output.

T|UCS=id
Specifies, for impact printers, the 1 to 4 character identifier of the print train that

is mounted on this printer. The identifier must reside in SYS1.IMAGELIB and the indicated printer must have the universal character set (UCS) feature.

For 3800 printers, T= specifies both the identifier (1 to 4 alphameric characters) of the print train character set that is mounted on the printer and the installation's default character set for SYSOUT data sets that do not specify the UCS= parameter through JCL. This identifier must be available in SYS1.IMAGELIB.

Notes:

1. If you specify an invalid identifier, JES2 bypasses the UCS loading procedure and issues the $HASP190 setup message so the operator can specify a valid image.
2. If you specify T=0 or a zero value was specified for the UCS operand on the PRINTDEF initialization statement, JES2 does not load the UCS buffer.

   You would want to nullify the UCS operand when running a printer in FSS mode if you wish to use the default character set specified in the FSS procedure used to start the printer.
3. This operand is only valid for a 1403 printer that has the UCS feature.

TRace={No|P|Yes}
Specifies whether tracing is to be activated or deactivated for this print processor. This operand requires system authority.

No Tracing is disabled.

P|Yes Tracing is activated if trace IDs 11, 12, 14, and 15 are currently enabled. Trace IDs 11, 12, 14, and 15 can be enabled either at initialization on the TRACE(n) statement or through the $S TRACE(n) command.

TRANS={DEFAULT|No|Yes}
IF MODE=JES, the TRANS= parameter on this statement affects data translation:

- If TRANS=YES, JES2 translates each line of output sent to the device regardless of the device type or the setting of the TRANS= parameter of the PRINTDEF initialization statement.
- If TRANS=NO, JES2 does not translate output sent to the device regardless of the device type or the setting of the TRANS= parameter on the PRINTDEF initialization statement.
- If TRANS=DEFAULT, or TRANS= is omitted and the PRINTDEF initialization statement specifies TRANS=YES, and the device is either a local 1403 or a remote printer, JES2 translates each line of output sent to the device. Otherwise, JES2 does not translate output sent to the device.

TRKCELL={No|Yes}
Specifies whether data sets that belong to a SYSOUT class with the track-cell characteristic are read from the spool in one operation. The TRKCELL parameter on the SPOOLDEF initialization statement specifies the number of records in the track cell. If you specify NO, one record is read from the spool for each despooling operation.

UCSVerfy={No|Yes}
Specifies whether (YES) or not (NO) UCS verification processing is performed when a UCS image is loaded for 4245 and 4248 printers. UCS images are loaded on 4245 and 4248 printers only when required for print processing (they are **not** loaded in response to a $T PRT command that specifies a change in UCS setup). Specifying UCSVERFY=YES provides UCS verification and causes

the band image to be displayed to the 4245 and 4248 printers. UCSVERFY=NO suppresses the image display. This operand can be modified through a JES2 Warm start.

UNIT={devnum|/devnum}
Specifies no value or a 3-digit, or 4-digit hexadecimal device number. Device numbers can be specified by any of the following formats:

```
UNIT=        (to specify a null value)
UNIT=ddd
UNIT=dddd
UNIT=/ddd
UNIT=/dddd
```

where ddd and dddd represent the device numbers.

A slash (/) can optionally precede the device number (for compatibility with other commands that require a slash to denote a 4-digit device number).

Notes:

1. You can omit this parameter when defining local printers, however, if you do and the printer requires a unit address (for example, all JES mode printers), you must specify a unit address on the UNIT parameter of the $T command before starting the printer.
2. If UNIT= is not specified at this time, the defaults for COPYMARK, FLASH, FCB, and UCS will be based on the setting of the MODE= parameter. If you specify MODE=FSS, the defaults will be the same as if the device was a non-impact printer. If you specify MODE=JES, the defaults will be set assuming the device is an impact printer.

Volume=volume
Specifies the 5 to 6 character volume serial number of a volume containing a spool data set. Only the output of jobs which reside on one or more of the specified volume(s) can be selected for printing. You can specify as many as four volumes. Use commas to separate individual volume IDs and enclose this list in parentheses if more than one ID is specified.

Note: A null parameter of VOLUME=() specifies that volume is not a value specified for work selection. You must specify the empty parentheses.

Writer=writer
Specifies the 1 to 8 character writer name assigned to this printer. If you do not specify this parameter, no writer name is assigned.

Note: If you do not assign a writer name to this printer but specify Writer as an exact value match in the work selection (WS) list, the printer selects only output groups without a writer name.

WS=ws
Specifies the work values for this printer. Using any combination of user and JES2-defined criteria, you can specify up to 19 criteria in the WS= list. Values which are not specified are not considered during output selection, although they are used by JES2 to determine setup requirements. This operand can be particularly useful when draining a specific spool volume. To specify a printer work selection list, use the following values:

1. One slash (/) can precede or follow any number of values. All values placed before the slash must be matched exactly if the work is to be selected. Values placed after the slash do not have to match exactly except in the following cases:

Queue
Routecde
PRMode
Volume

Table 48 on page 147 defines each value when placed either before or after the slash.

2. Queue, Routecde, PRMode, and Volume can be specified as multiple values on the output device statements. Placing these values before the slash in the WS= list, indicates a left to right priority order of multiple values, if multiple values have been specified. Placing these values after the slash indicates no priority order of multiple values, but a match is still required.
3. The order of those criteria specified after the slash indicates the priority (highest to lowest, in left to right order) in which JES2 attempts to match them.
4. Specifying a minus sign (-) before a value removes it from the list.

   Note: Message $HASP650 is issued if an incorrect operand is found in the WS operand; that is, this message is issued if you try to remove a value that is not there. For example, if you enter: `$addprt1,ws=(-o)` you get the $HASP650 message because 'o' (forms overlay) is not in the current work selection list for printer1.
5. Specifying a value that is not currently specified adds it to the list. List position depends upon whether you specify a slash before or after the value in the command.
6. Demand setup presumes that characteristics change throughout the output group. As a result, if your output specifies demand (DMND) setup, you cannot specify an exact match between that output and the device.

   To print demand (DMND) setup output you must first remove the work selection criteria specified for the printer that is referenced by DMND.
7. If the device is a remote printer, route code (R=) must be specified in the work selection list.
8. The smaller the work selection list, the less the placement of certain values affects work selection. Job output elements are queued to the class queues by route code, then by priority. You can improve system performance by using this information to tune the work selection list.

Authority Required

This command requires **device and system** authority. The description of the $T RDRnn command explains how to ensure the proper MVS system command group authority is assigned.

This command requires **update** security access authority. For a description of assigning command input authority, see *z/OS JES2 Initialization and Tuning Guide*.

Processing Considerations

- If you shut down this JES2 system and then attempt to restart it, you will lose the specifications of any printer defined through the $ADD PRT unless those specifications had been permanently defined by a PRT(nnnn) initialization statement.
- If you are uncertain of the controls in effect, enter either the $D U command or the $D PRT command for the printer in question.

Scope

Single Member. The values supplied for this command will be in effect for this member only.

Depending on your installation's setup, however, you might want this command to be applied to all members of the MAS (to ensure a consistent environment across the MAS). If so, you can use the MVS ROUTE *ALL command to issue this command to all active members (if the JES2 command character is the same on all members). See *z/OS MVS System Commands* for more information on using the ROUTE *ALL command.

Messages

The $HASP603 message displays the status of the specified device and its current characteristics.

The $HASP003 rc=65 indicates that the device specified by the UNIT= parameter exists, but does not match the device type information specified on the $ADD PRT command.

The $HASP003 rc=66 indicates that the device specified by the UNIT= parameter does not exist.

The $HASP003 rc=67 indicates that the FSS device specified by the UNIT= parameter is not defined on the $ADD PRT command or the PRT initialization statement.

Examples

```
1  $add prt999,unit=002
$HASP603 PRT999    UNIT=0002,STATUS=DRAINED,CKPTLINE=0,
$HASP603           CKPTMODE=PAGE,CKPTPAGE=100,CREATOR=,DEVFCB=,
$HASP603           FCB=6,FORMS=(STD,,,,,,,),FSS=,HONORTRC=YES,
$HASP603           JOBNAME=,LASTFORM=STD,LIMIT=(0,*),MODE=JES,
$HASP603           NEWPAGE=DEFAULT,NPRO=300,PAUSE=NO,PLIM=(0,*),
$HASP603           PRMODE=(LINE),QUEUE=AJ,RANGE=(J1,999999),
$HASP603           ROUTECDE=(LOCAL),SEP=YES,SEPCHARS=DEFAULT,
$HASP603           SEPDS=NO,SETUP=HALT,SPACE=,TRACE=NO,
$HASP603           TRANS=DEFAULT,TRKCELL=NO,UCS=0,UCSVERFY=NO,
$HASP603           VOLUME=(,,,),WRITER=,
$HASP603           WS=(W,Q,R,PRM,LIM/F,UCS,FCB),FSATRACE=NO
```

JES2 defines local printer 999 at address 002 to the current installation.

```
2 $add prt114,fss=prt114,mode=fss
$HASP603 PRT114    UNIT=,STATUS=DRAINED,BURST=NO,CKPTLINE=0,
$HASP603           CKPTMODE=PAGE,CKPTPAGE=100,CKPTSEC=0,
$HASP603           CREATOR=,DEVFCB=,DEVFLASH=****,FCB=STD3,
$HASP603           FORMS=(STD,,,,,,,),FSS=PRT114,HONORTRC=YES,
$HASP603           JOBNAME=,LASTFORM=STD,LIMIT=(0,*),
$HASP603           COPYMARK=DATASET,MARK=NO,MODE=JES(SWITCHING),
$HASP603           NEWPAGE=DEFAULT,NPRO=300,PAUSE=NO,PLIM=(0,*),
$HASP603           PRESELCT=YES,PRMODE=(LINE),QUEUE=AJ,
$HASP603           RANGE=(J1,999999),ROUTECDE=(LOCAL),SEP=YES,
$HASP603           SEPCHARS=DEFAULT,SEPDS=NO,SETUP=HALT,SPACE=,
$HASP603           TRACE=NO,TRANS=DEFAULT,TRKCELL=NO,UCS=GT10,
$HASP603           UCSVERFY=NO,VOLUME=(,,,),WRITER=,
$HASP603           WS=(W,Q,R,PRM,LIM/F,UCS,FCB),FSATRACE=NO
```

JES2 defines page-mode printer 114 under the control of a functional subsystem to the current installation.

Table 48. Printer Work Selection Values

VALUE	BEFORE SLASH (/)	AFTER SLASH (/)
Burst	The B= specification of the output group must match the Burst specification of the printer. Otherwise, this output group is not considered selectable.	The B= specification of the output group need not match the burst specification of the printer. However, JES2 issues the $HASP190 message if a difference exists.
CReator	The output group's CReator= specification must match the CReator= specification of the printer. Otherwise, this output group is not selected.	The CReator specification of the output group need not match the burst specification of the printer. However, JES2 issues the $HASP190 message if a difference exists.
{FCB|C}	The output group's FCB image or carriage control tape must match the printer's current FCB or carriage control tape. Otherwise, the output group is not considered selectable.	The output group's FCB image or carriage control tape need not match the FCB or carriage control tape specification of the printer. However, JES2 issues the $HASP190 message if differences exist in both the FCB and FORMS specifications.
{FLash|O}	The output group's FLASH or forms overlay must match the current FLASH (O=) specification for the output printer. Otherwise, the output group is not selected.	The output group's FLASH or forms overlay need not match the FLASH (O=) specification for the printer. However, JES2 issues the $HASP190 message if a difference exists. In this case it is preferred that the forms of the output group match one of the forms specified for the printer.
Forms	The output group's FORMS specification must match one of the forms specified for the printer. Otherwise, the output group is not considered selectable. If there are multiple forms, the forms have equal priority.	It is not required that the output group's forms match the current forms setup of the printer. However, JES2 issues the $HASP190 message if a difference exists.
JOBname	The output group's jobname must match the jobname specified (JOBNAME=) for this printer.	It is not required that the output group's jobname match the jobname specified (JOBNAME=) for this printer. JES2 attempts to consecutively select all eligible output for a particular job.
LIMit	The amount of output generated by an output group must fall within the limits (LIM= or PLIM=) set for this printer. Otherwise, the output group is not considered selectable. Page limits are checked if the data set is in page mode. Record limits are checked if the data set is in line mode. If the page data set contains some line mode data, then both page limits and record limits are checked.	It is not required that the amount of output generated by the output group fall within the limits (LIM= or PLIM=).
{PRMode}	The output group's process mode must match one of the process modes (PRMODE=) specified for the printer. Otherwise, the output group is not considered selectable. If there are multiple PRMODEs, the list is considered to be in priority sequence: the highest priority is given to the first PRMODE in the list.	The output group's process mode must match the process mode (PRMODE=) specified for the printer. However, if there are multiple PRMODEs, the list is not in priority sequence.
Queue	When specified in the WS list, only those output classes specified for this device are searched for work. Since all classes (A-Z and 0-9) are searched when Queue is not specified, we recommend that 'Q' always be included in the WS list. The search order follows the list sequence.	Output classes specified for this device are not in priority sequence: all classes are equally preferred. Output groups in the list's first class are selected first if they meet all other requirements.

Table 48. Printer Work Selection Values (continued)

VALUE	BEFORE SLASH (/)	AFTER SLASH (/)
RANGE	The job number of the job associated with the output group must be within the range (RANGE=) specified for this printer.	It is not required that the number of the job associated with the output group be within the specified range (RANGE=).
Routecde	The output group's destination must match the route code (R=) specified for this printer. If not, the output group cannot be selected. If you specify multiple route codes for the printer, a match with the first route code is preferred since the list is in priority sequence.	It is not required that the output group's destination match the route code (R=) specified for this printer. If there are multiple route codes, the list is not in priority sequence.
{UCS|T}	The output group's universal character set must match the universal character set (UCS=) specified for this printer. Otherwise, the work is not selected.	It is not required that the output group's universal character set match the universal character set specified for this printer. However, JES2 issues the $HASP190 message if a difference exists.
Volume	The volume of the job associated with this output group must match the volume (VOLUME=) specified for this printer. If you specify multiple volumes, the list is in priority sequence: the leftmost volume has the highest priority.	The volume of the job associated with this output group must match the volume (VOLUME=) specified for this printer. However, if you specify multiple volumes the list is not in priority sequence.
Writer	The writer name specified for the output group must match the writer name specified (W=) for this printer. Otherwise, the output group cannot be selected.	It is not required that the writer name specified for the output group match the writer name (W=+)specified for the printer.

$ADD REDIRECT - Set Redirection for Commands

Function

To specify redirection for commands entered at the entry console. The operator should use $ADD REDIRECT if redirection was not specified already by the initialization statement or a previous $ADD REDIRect for this console.

In a sysplex, if a JES2 subsystem has SCOPE=SYSTEM on its CONDEF initialization statement, redirection will not be in effect for that subsystem. To have that subsystem take part in the redirection, issue the $ADD REDIRect command on that JES2 subsystem.

Syntax

```
►►─$ADD─REDIRect─┬─entry_console──┬──────────────────┬──────────────────────►
                 │                └─-─┬─entry_console─┬┘                      │
                 │                    └─*─────────────┘                       │
                 ├─'entry_console'─────────────────────────────────────────────┤
                 │      ┌──────────────────────────────────────────────┐      │
                 │      ▼                                              │      │
                 └─(────┬─entry_console──┬──────────────────┬──────────┬──)────┘
                        │                └─-─┬─entry_console─┬┘          │
                        │                    └─*─────────────┘           │
                        ├─entry_console──────────────────────────────────┤
                        └─'entry_console'──────────────────────────────────┘

►──┬──────────────┬──┬──────────────────┬──┬──────────────┬──────────────────►
   └─,DA=con_spec─┘  └─,DCONNECT=con_spec─┘  └─,DEF=con_spec─┘

►──┬──────────────┬──┬──────────────┬──┬──────────────────────┬──┬──────────────┬──►
   └─,DF=con_spec─┘  └─,DI=con_spec─┘  └─,─┬─DJ─┬─=con_spec─┘  └─,DN=con_spec─┘
                                           ├─DS─┤
                                           └─DT─┘

►──┬──────────────────┬──┬──────────────┬──┬──────────────────┬──┬──────────────┬──►
   └─,DNODE=con_spec─┘  └─,DQ=con_spec─┘  └─,DSPL=con_spec─┘  └─,DU=con_spec─┘

►──┬──────────────────────────────────────────────────────────────────────────►◄
   └─,─┬─LJ─┬─=con_spec─┘
       ├─LS─┤
       └─LT─┘
```

Parameters

con_spec

Specifies the active MCS console at which the redirected command responses appear. If you specify only an area, the output will appear in the indicated area of the entry_console. If area is omitted, then the default area defined on the CONDEF RDIRAREA= operand will be used. This parameter is required.
Con_spec may be defined as follows:

a An output area ID
hh A two-digit console ID
hha A two-digit console ID with an output area ID
name A 2 to 8 character symbolic console name
name-a
A symbolic console name and an output area ID

DA=con_spec
Display active jobs command.

DCONNECT=con_spec
Display network connections.

DEF=con_spec
Display JES2 parameter definitions.

DF=con_spec
Display forms queue.

DI=con_spec
Display initiators.

DJ|DS|DT=con_spec
Display job.

DN=conn_spec
Display queued jobs.

DNODE=con_spec
Display NJE nodes.

DQ=conn_spec
Display number of queued jobs.

DSPL=con_spec
Display spool volumes.

DU=con_spec
Display units.

entry_console
Specifies the 2- to 8-character console ID on which an operator enters a command. If you enter any redirected commands from this console, it displays those commands that are redirected to an alternate console or area. This parameter is required and must include a console ID or console name defined during initialization. Do not specify a console area.

LJ|LS|LT=con_spec
List job output.

Authority Required

This command requires **system** authority. The description of the $T RDRnn command explains how to ensure the proper MVS system command group authority is assigned.

This command also requires of assigning command input authority, see *z/OS JES2 Initialization and Tuning Guide*.

Scope

Single Member. The values supplied for this command will be in effect for this member only. There is no need to have this command issued to all members of the MAS.

Messages

The $HASP003 RC=56 message is issued if an $ADD REDIRect command is entered for a console that is already redirected.

Examples

1 `$ADD redirect(CN3EO),DNODE=13`

```
$HASP818  DA=CN3EO,DF=CN3EO,DI=CN3EO,DJ=CN3EO,DN=CN3EO,
$HASP818  DQ=CN3EO,DU=CN3EO,DCONNECT=CN3EO,DNODE=CN320,
$HASP818  DEF=CN3EO,DSPL=CN3EO,LJ=CN3EO
```

The above example causes the display response from a $D NODE command entered at console CN3EO (1) to be automatically displayed at the console CN320 (13).

2 `$ADD redirect(13),da=cn3eo-a`

```
$HASP818  DA=CN3EO-A,DF=CN32O,DI=CN32O,DJ=CN320,DN=CN320,
$HASP818  DQ=CN320,DU=CN320,DCONNECT=CN320,DNODE=CN320,
$HASP818  DEF=CN320,DSPL=CN320,LJ=CN320
```

The above example causes the display response from a $DA command entered on console CN320(13) to be automatically displayed at the console CN3EO (1) in the out of line area A.

$ADD RMT(nnnn) - Add an RJE Workstation

Function

To add one or more RJE workstations. You cannot use this command to add an RJE workstation with a number higher than that either previously defined by RMTNUM= on the TPDEF initialization statement or the highest numbered RJE workstation defined through RMT(nnnn) initialization statements.

This command can be used to add BSC and SNA RJE workstations.

Not all parameters are applicable to each type of workstation. The parameter descriptions indicate applicability to each type and differences as appropriate. Parameters applicable to BSC-only and SNA-only workstations are listed here.

Parameters applicable to **BSC RJE workstations only**:
- BLOCK=
- BUFEXPAN=
- HTABS=
- MFORM=
- MRF2780=
- MULTILV=
- RECFM=
- SHARABLE=
- TRANSPAR=

Parameters applicable to **SNA RJE workstations only**:
- Autolog=
- COMPACT=
- LUNAME=
- SETUP=

Syntax

```
►►─$ADD─RMT─┬─nn─┬──────────┬──────────────────────────────────────────────►
            │    └─-─┬─nn─┬─┘                                  └─,Autolog=─┬─No──┬─┘
            │        └─*──┘                                               └─Yes─┘
            │   ┌──,──────────────────────┐
            └─(─┴─nn─┬──────────┬─┬──────┬─┴─)─┘
                     └─*──┘       └─-─┬─nn─┬─┘
                                      └─*──┘

►──┬──────────────────────┬──┬──────────────────────┬──┬──────────────────────┬──►
   └─,BLOCK=─┬─No──┬─┘  └─,BUFEXPAN=─┬─0─┬─┘  └─,BUFSIZE=bufsize─┘
             └─Yes─┘                 ├─1─┤
                                     └─2─┘

►──┬──────────────────────────┬──┬──────────────────────────┬──┬──────────────────────────┬──►
   └─,COMPACT=─┬─No──┬─┘  └─,COMPRESS=─┬─No──┬─┘  └─,CONDEST=condest─┘
               └─Yes─┘                 └─Yes─┘
```

```
►─┬──────────────────────────┬─┬──────────────────────────────────────────┬─┬──────────────────────────────────────────┬──►
  │ ,CONS=──┬─No──┬──────┬─┬─┬─ ,DEVTYPE=──┬─AS/400──────┬─┬─ ,Discintv=discintv─┬─
  │         └─Yes─┘      │ │ │             ├─AS400────────┤ │                     │
  │                      │ │ │             ├─LUTYPE1──────┤ │                     │
  │                      │ │ │             ├─M20-2────────┤ │                     │
  │                      │ │ │             ├─M20-4────────┤ │                     │
  │                      │ │ │             ├─M20-5────────┤ │                     │
  │                      │ │ │             ├─M20-6────────┤ │                     │
  │                      │ │ │             ├─S/3──────────┤ │                     │
  │                      │ │ │             ├─S/36─────────┤ │                     │
  │                      │ │ │             ├─S/360────────┤ │                     │
  │                      │ │ │             ├─S/370────────┤ │                     │
  │                      │ │ │             ├─SYSTEM/3─────┤ │                     │
  │                      │ │ │             ├─SYSTEM/36────┤ │                     │
  │                      │ │ │             ├─SYSTEM3──────┤ │                     │
  │                      │ │ │             ├─SYSTEM36─────┤ │                     │
  │                      │ │ │             ├─S360─────────┤ │                     │
  │                      │ │ │             ├─S370─────────┤ │                     │
  │                      │ │ │             ├─1130─────────┤ │                     │
  │                      │ │ │             ├─2770─────────┤ │                     │
  │                      │ │ │             ├─2780─────────┤ │                     │
  │                      │ │ │             ├─2922─────────┤ │                     │
  │                      │ │ │             ├─3740─────────┤ │                     │
  │                      │ │ │             ├─3780─────────┤ │                     │
  │                      │ │ │             └─3781─────────┘ │                     │

►─┬──────────────────────────┬─┬──────────────────────────┬─┬──────────────────────────────────────────┬──►
  │ ,HTABS=──┬─No──┬──────┬─┬─┬─ ,LINE=line─┬─┬─ ,LOCAL190=──┬─ACTION─┬─┬─
  │          └─Yes─┘      │ │ │             │ │              └─INFO───┘ │
  │                       │ │ │             │ │                         │

►─┬──────────────────────────┬─┬──────────────────────────┬─┬──────────────────────────┬──►
  │ ,LOGON=logon─┬─┬─ ,LUNAME=luname─┬─┬─ ,MFORM=──┬─J─┬─┬─
  │              │ │                 │ │           ├─M─┤ │
  │              │ │                 │ │           └─T─┘ │

►─┬──────────────────────────┬─┬──────────────────────────┬─┬──────────────────────────┬──►
  │ ,MRF2780=──┬─No──┬──────┬─┬─┬─ ,MSGPRT=──┬─No──┬──────┬─┬─┬─ ,MULTILV=──┬─No──┬──────┬─┬─
  │            └─Yes─┘      │ │ │            └─Yes─┘      │ │ │             └─Yes─┘      │ │
  │                         │ │ │                         │ │ │                          │ │

►─┬──────────────────────────┬─┬──────────────────────────┬─┬──────────────────────────┬──►
  │ ,NUMPRt=numprt─┬─┬─ ,NUMPUn=numpun─┬─┬─ ,NUMRDr=numrdr─┬─┬─
  │                │ │                 │ │                 │ │

►─┬──────────────────────────┬─┬──────────────────────────┬─┬──────────────────────────┬──►
  │ ,Password=password─┬─┬─ ,RECFM=──┬─FIXED────┬─┬─┬─ ,RMT150=──┬─No──┬──────┬─┬─
  │                    │ │           └─VARIABLE─┘ │ │            └─Yes─┘      │ │
  │                    │ │                        │ │                         │ │

►─┬──────────────────────────┬─┬──────────────────────────┬─┬──────────────────────────┬──►
  │ ,Routecde=routecde─┬─┬─ ,SETUP=──┬─MSG──┬──────┬─┬─┬─ ,──┬─SHARable──┬─=──┬─No──┬──────┬─┬─
  │                    │ │           └─PDIR─┘      │ │ │     └─SHAREable─┘    └─Yes─┘      │ │
  │                    │ │                         │ │ │                                   │ │

►─┬──────────────────────────┬─┬──────────────────────────┬──►◄
  │ ,TRANSPAR=──┬─No──┬──────┬─┬─┬─ ,WAITIME=waitime─┬─┬─
  │             └─Yes─┘      │ │ │                   │ │
  │                          │ │ │                   │ │
```

Parameters

(nnnn)

The subscript defining the RJE workstation(s) affected by this command. The subscript may specify a 1 to 4 digit RJE workstation identifier or a range of

identifiers as defined by an RMTnnnn initialization statement. For information about specifying a range for this subscript, see “Syntax Conventions” at the front of this chapter.

Autolog={No|Yes}
For SNA RJE workstations only, specifies whether or not the SNA RJE workstation can be automatically connected (logged on) when output (print/punch) or messages are queued for transmission to the RJE workstation. The RJE workstation is allowed to log on only if:

- This command also specifies a logical unit name through the LUNAME= parameter on the corresponding RMTnnnn initialization statement.
- A JES2 line has been started and is available.
- The maximum number of sessions specified at initialization (with the SESSIONS parameter on the TPDEF statement) has not been exceeded.

BLOCK={No|Yes}
For BSC RJE workstations only, specifies whether or not this workstation has a blocked (YES) or unblocked (NO) data record format.

BUFEXPAN= {0|1|2}
For BSC 2770 RJE workstations only, specifies whether or not this 2770 terminal has a buffer-expansion feature. If you do not specify a value, JES2 provides no buffer expansion.

0 This terminal does not have the buffer-expansion feature.

1 This terminal has the buffer-expansion feature and implies an RJE workstation buffer of 264 bytes.

2 This terminal has the additional buffer-expansion feature and implies an RJE workstation buffer of 520 bytes.

Note: If an attached printer has a PRWIDTH= parameter greater than 120 bytes, specify BUFEXPAN=1 or 2.

BUFSIZE=bufsize
For BSC RJE workstations, specifies the largest buffer (127 to the BELOWBUF=(SIZE=) parameter value on the TPDEF initialization statement) that can be either sent from or received by this workstation.

BUFSIZE= enforces minimum buffer size specification based on device type for BSC RJE workstations.

For SNA RJE workstations, specifies the largest buffer (256 to the EXTBUF=(SIZE=) parameter value on the TPDEF initialization statement) that can be either sent from or received by this SNA RJE workstation.

If you do not specify this parameter, JES2 provides the following defaults for the following device types:

Table 49. JES2 BUFSIZE Defaults for RJE Workstations

Workstation	Type	BUFSIZE Value
SNA	N/A	256
Multileaving Terminals and Systems	N/A	MBUFSIZE= value on TPDEF statement
Hardware Terminal	2770 without buffer expansion (BUFEXPAN=0)	127

Table 49. JES2 BUFSIZE Defaults for RJE Workstations (continued)

Workstation	Type	BUFSIZE Value
Hardware Terminal	2770 with buffer expansion (BUFEXPAN=1)	264
Hardware Terminal	2770 with additional buffer expansion (BUFEXPAN=2)	520
Hardware Terminal	2780	400
Hardware Terminal	3780	520
Hardware Terminal	3781	520

COMPACT={No|Yes}
For SNA RJE workstations only, specifies whether (YES) or not (NO) this RJE workstation or terminal allows JES2 to send a compaction table for use with a printer or punch data set.

Use the COMPACT initialization statement to define compaction tables. If more than one session is active and COMPACT=YES, all sessions are eligible to receive a compaction table.

COMPRESS={No|Yes}
Specifies whether (YES) or not (NO) this RJE workstation uses the compression/expansion feature.

For BSC RJE (2770 and 3780) workstations, specifies if COMPRESS=YES is specified on both the LINE(nnnn) initialization statement and the remote device (print, punch, and reader) initialization statement (R(nnnn).XXm), the COMPRESS= parameter on this command determines whether JES2 uses the compression/expansion feature. If you specify COMPRESS=YES, JES2 forces HTABS=NO.

If COMPRESS=NO on the LINE(nnnn) statement, JES2 ignores this parameter.

For SNA RJE workstations, if COMPACT=YES is specified, JES2 forces compression.

CONDEST=condest
The route code (1 to the value of RMTNUM= on the TPDEF initialization statement) that is used for responses to commands entered from this RJE workstation. The value specified should be the number of a defined RJE workstation.

CONS={No|Yes}
Specifies whether (YES) or not (NO) this RJE workstation has an operator console or is simulating an operator console through the &PRTCONS RMT generation statement. **For SNA RJE workstations**, you should specify this parameter only if the RJE workstation has an operator console.

If JES2 determines that this remote workstation cannot have a console, it forces CONS=NO.

If you do not specify this parameter, JES2 provides a default of CONS=NO. The CONS=NO value does not stop JES2 from sending data destined to a console.

DEVTYPE=type
Specifies the type of processor at this RJE workstation. If this parameter is not specified, terminal type 2770 (BSC workstation) is used.

The following types apply:

LUTYPE1
For SNA RJE workstations, specifies that the workstation can be accessed only through a logical line. (This is the only valid SNA specification for DEVTYPE=.)

2770|2780|3740|3780|3781
For BSC RJE workstations, specifies a hardware terminal.

1130|2922|M20-2|M20-4|M20-5|M20-6
For BSC RJE workstations, specifies a multileaving workstation.

AS400|AS/400®|SYSTEM36|SYSTEM/36| S/36|S360| S/360|S370|S/370|SYSTEM3|SYSTEM/3|S/3
For BSC RJE workstations, specify a system.

Notes:

1. If you define a workstation that is not explicitly supported by JES2 but does emulate one of the types listed above, consult the documentation for that terminal so you set characteristics (such as buffer sizes) appropriately.
2. Specify a 3740 hardware terminal as a 2780.
3. To ensure that punch output is directed to the proper device, specify ‘3781’ to define remote 3780 terminals that contain punches.

Discintv=discintv
For BSC RJE workstations, specifies the time interval in seconds (0 to 8160) after which, if there has been no successful text transmission in either direction, JES2 disconnects this RJE workstation from the processing unit.

For SNA RJE workstations, specifies the *maximum* interval in seconds (0 to 8160) after which, if there has been no successful text transmission in either direction, JES2 ends the session between the SNA RJE workstation and the processing unit.

- JES2 rounds this value to the next highest multiple of 32.
- 0 indicates that this terminal is not to be disconnected
- Error recovery tries and idle time do not count as successful text transmission.
- If automatic disconnect is not specified, the remote terminal remains connected until the operator signs it off.

HTABS={No|Yes}
For BSC RJE workstations only, specifies whether (YES) or not (NO) this 2770 or 2780 terminal has the horizontal format-control feature.

If you specify COMPRESS=YES, this parameter is forced to HTABS=NO.

LINE=line
Specifies the number (0-32767) of the teleprocessing (BSC) or logical (SNA) lines that are both connected and **dedicated** to this terminal.

For BSC RJE workstations, if you specify LINE=0, JES2 provides a **nondedicated** RJE workstation, which can use any **nondedicated** BSC line. A /*SIGNON JCL statement is required to start the RJE workstation.

For SNA RJE workstations, if you specify LINE=0, JES2 provides a **nondedicated** RJE workstation, which can use any **nondedicated** SNA line. If you specify LINE= as a value other than 0, you must also specify the UNIT=SNA parameter on the LINE(nnnn) initialization statement.

LOCAL190={ACTION|INFO}
Specifies the type of operator setup messages ($HASP190) that JES2 issues at the local processor console for this RJE workstation. If you do not specify this parameter, JES2 provides a default of ACTION.

ACTION
Specifies that operator setup messages issued at the local console for this remote device are **action messages** (messages that require an operator action to delete them from the console).

INFO
Specifies operator setup messages issued at the local console for this remote device as **information messages** (messages that do not require an operator action to delete them from the console).

LOGON=logon
Specifies the number (1-999) of the local LOGON DCT which should be used when starting a JES2-initiated session with this SNA remote (autologon or $S RMT). The default value of 0 indicates that LOGON2 is to be used unless it is not defined, in which case the lowest numbered logon is to be used.

LUNAME=luname
For SNA RJE workstations only, specifies the logical unit name of this RJE workstation or terminal. If you specify this parameter, it must match the name defined to VTAM at system initialization.

If you use the automatic logon capability (Autolog=YES), you must specify an LUNAME= value. If the logical unit associated with the logical unit name is not the first of the terminal's logical units to logon to JES2, the LUNAME associated with the session comes from the name pointed to by the parameter list that VTAM passes to the JES2 logon exit.

MFORM={J|M|T}
For BSC RJE workstations only, specifies the amount of information to be displayed in JES2 remote console messages for this RJE workstation.

J JES2 job-related messages including the jobname and job ID of the issuer.

M JES2 job-related message text only.

T JES2 job-related messages including a time stamp, the jobname, and job ID of the issuer.

MRF2780={No|Yes}
For BSC RJE workstations only, specifies whether (YES) or not (NO) this 2780 terminal has the multiple-record feature.

MSGPRT={No|Yes}
For BSC RJE workstations, specifies whether (YES) or not (NO) JES2 prints messages routed to a printer attached to the console of an RJE workstation.

NO Specifies that JES2 discards messages if the RJE workstation console is not available.

Specify NO if you would rather discard messages instead of printing them on the first available printer at the remote.

For BSC RJE workstations, this parameter only has meaning for an RJE workstation that does **not** have a console.

YES Specifies that JES2 prints messages if the remote console is unavailable. For example, the remote console might not exist, be signed

on, or have enough messages queued to it to exceed the RMTMSG= parameter on the TPDEF initialization statement.

For BSC RJE workstations, note that once a message is spooled for an RJE workstation, that message can only be printed; it cannot be displayed on an RJE workstation console.

MULTILV={No|Yes}
For BSC RJE workstations only, specifies whether (YES) or not (NO) this RJE workstation uses the BSC multileaving interfaces. If MULTILV=YES, you must specify a multileaving workstation. MULTILV=NO defines this RJE workstation as a BSC hardware terminal.

NUMPRt=numprt
Specifies the number (0-7) of printers (BSC) or logical printers (SNA) at this RJE workstation or terminal. JES2 provides the defaults specified on the R(nnnn).PR(m) initialization statement.

Use the $T R(nnnn).PR(m) command to change any characteristics of each printer.

For BSC RJE workstations, JES2 can use values greater than 1 only when you specify MULTILV=YES. If you specify MULTILV=NO, JES2 uses a value of NUMPRT=1. A maximum total of eight printers and punches can be defined.

For SNA RJE workstations, a maximum total of eight printers, punches, and a console can be specified. You must specify at least one device on the RMT(nnnn) definition.

If you do not specify a value, JES2 provides a default of NUMPRT=1. Specify NUMPRT=0 if you want no printers on this RJE workstation or terminal.

NUMPUn=numpun
Specifies the number (0-7) of card punches (BSC) or logical card punches (SNA) at this RJE workstation or terminal. You must specify at least one device (printer, punch, or reader) on the remote definition. JES2 provides the defaults specified on the R(nnnn).PU(m) initialization statement. Then you can use the $T R(nnnn).PU(m) command to change any characteristics of each punch.

For BSC RJE workstations, a maximum total of eight printers and punches can be defined. If you specify MULTILV=NO and this parameter is specified greater than 1, JES2 uses only 1.

For SNA RJE workstations, a maximum total of eight printers, punches, and a console can be defined. SNA RJE workstations can support as many as seven reader data streams.

NUMRDr=numrdr
Specifies the number (0-7) of card readers (BSC) or logical card readers (SNA) at this RJE workstation or terminal. SNA RJE workstations can support as many as seven reader data streams. You must specify at least one device (printer, punch, or reader) on the remote definition. JES2 provides the defaults specified on the R(nnnn).RD(m) initialization statement. Then you can use the $T R(nnnn).RD(m) command to change any characteristics of each reader.

If you do not specify a value, JES2 provides a default of NUMRDR=1.

Password=password
The 1 to 8 character security password used to prevent unauthorized RJE workstation users from using the resources of this RJE workstation.

If you do not specify this parameter, JES2 provides no password.

Note: Be certain to make a note of those passwords assigned because there is no facility for displaying the passwords in effect.

RECFM={FIXED|VARIABLE}
For BSC RJE workstations only, specifies whether the data record for this terminal is fixed-length (FIXED) or variable-length (VARIABLE).

RMT150={No|Yes}
Specifies $HASP150 message routing as follows:

Y If this RJE workstation has a console, the $HASP150 message is first sent to this console and then to the local operator.

N The $HASP150 message is sent only to the local operator.

Notes:

1. For SYSTEM36 (S/36) terminals, if you specify CONS=YES, MULTILV=YES, and RMT150=YES, the remote printer pauses to ensure that the $HASP150 message arrives at the console before the data sets begin to print.
2. For SNA RJE workstations, this parameter is valid only if CONS=YES.
3. This parameter is not valid for hardware terminals. Refer to the DEVTYPE= parameter for a list of valid hardware terminal types for SNA RJE workstations.

Routecde=routecde
Specifies the route code (1 to 32767) assigned to this terminal and its associated printers, punches and readers. If you do not assign a Routecde= value, JES2 assigns the number of this terminal (RMT(nnnn)) as its route code.

SETUP={MSG|PDIR}
For SNA RJE workstations only, specifies setup information as follows:

MSG
Specifies that JES2 must inform the remote operator of any setup requirements through the $HASP190 message. After setup is complete, the operator must enter a $S command to start JES2 transmission.

PDIR
Specifies that JES2 constructs and sends a peripheral data information record (PDIR) to the RJE workstation. The RJE workstation must process the data set header and generate any required messages. This setting allows spooling of data and generation of multiple copies of a data set at the RJE workstation.

SHARable|SHAREable={No|Yes}
For BSC RJE workstations only, specifies whether (YES) or not (NO) JES2 allows the LINE= parameter value to be used by other RJE workstations. (If LINE=0, JES2 ignores this parameter.)

NO
Indicates that no other RJE workstations can specify and use the LINE= value and no /*SIGNON JCL statement is needed to start the remote.

YES
Indicates that multiple RMT definitions can also specify and use (share) the line specified on LINE= and a /*SIGNON JCL statement is required to start one of these RJE workstations.

TRANSPAR={No|Yes}
For BSC RJE workstations only, specifies whether (YES) or not (NO) this

RJE workstation has the text-transparency feature. To use this feature, you must also specify TRANSPAR=YES on the LINE(nnnn) initialization statement.

WAITIME=waitime
The length of time in seconds (0-30), that the RJE workstation access method (RTAM) should wait after completing the processing of any input stream, printed output stream, or punched output stream to allow the operator to enter an input stream at this RJE workstation.

For SNA RJE workstations, if WAITIME= is set too low (note the default of 1 second), contention might occur during SNA logon processing, which results in $HASP094 messages and the termination of the SNA session. Increase this parameter to allow the RJE workstation adequate time to respond during logon processing so that proper LU type 1 protocol is followed.

Authority Required

This command requires **device** authority. The description of the $T RDRnn command explains how to ensure the proper MVS system command group authority is assigned.

This command requires **control** security access authority. For a description of assigning command input authority, see *z/OS JES2 Initialization and Tuning Guide*.

Scope

Single Member. The values supplied for this command will be in effect for this member only.

Messages

The $HASP879 message displays the status of the specified RJE workstation.

Examples

1 `$addrmt83,devtype=2780,transpar=n`

```
$HASP879 RMT(83)  DEVTYPE=2780,STATUS=INACTIVE,BUFEXPAN=0,
                  BLOCK=YES,BUFSIZE=400,COMPRESS=NO,
                  CONDEST=83,DISCINTV=0,HTABS=NO,LINE=0
                  LOCAL190=ACTION,MFORM=T,MRF2780=NO,
                  MSGPRT=YES,MULTILV=NO,NUMPRT=1,NUMPUN=0,
                  NUMRDR=1,PASSWORD=(NOTSET),RECFM=VARIABLE,
                  RMT150=NO,ROUTECDE=83,TRANSPAR=NO,WAITIME=1
```

JES2 adds BSC RJE workstation 83 with a hardware terminal that does not have the text transparency feature.

2 `$addrmt11,devtype=lutype1,numpun=7,cons=n,numprt=1`

```
$HASP879 RMT(11)  DEVTYPE=LUTYPE1,STATUS=INACTIVE,AUTOLOG=NO,
                  BUFSIZE=256,COMPACT=NO,COMPRESS=NO,
                  CONDEST=11,CONS=NO,DISCINTV=0,LINE=0,
                  LOCAL190=ACTION,LUNAME=,MFORM=T,MSGPRT=YES,
                  NUMPRT=1,NUMPUN=7,NUMRDR=1,
                  PASSWORD=(NOTSET),RMT150=NO,ROUTECDE=11,
                  SETUP=MSG,START=NO,WAITIME=1
```

The results of this command are:

- JES2 creates a SNA RJE workstation with seven punches, one printer, and no console.
- Because the RJE workstation has no console, JES2 spools messages to the printer.

$B PRTnnnn and $B Rnnnn.PRm - Logically Backspace Printer Output

Function

To backspace printer output a specified number of pages, to the beginning of a data set, or to the most recent checkpoint.

Syntax

```
►►──$B──┬─PRTnnnn─┬──┬──────┬──┬──────────────────────────┬──┬──────────┬──────────►◄
        └─Rnnnn.PRm─┘  └─,─D─┘  └─,─C──┬──────────┬──┘  └─,─pages─┘
                                       └─,─pages─┘
```

Parameters

C Output is backspaced to the most recent checkpoint. JES2 assumes that all data up to the most recent checkpoint has printed successfully. Backspacing to the most recent checkpoint is the only way JES2 can ensure no loss of data for remote printers.

You can also specify *pages* with C, which causes JES2 to backspace the data set *pages* further than the most recent checkpoint.

D Output is backspaced to the beginning of the data set. Printing resumes at the beginning of the data set.

pages
Specifies the number of pages, or for FSS printers, the number of sides, that the output is to be backspaced. For FSS devices, this can be up to 8 digits in length (1-99999999). For other devices, it can be up to 4 digits in length (1-9999).

If you are using an impact printer and you specify *pages* for data sets with a line count of zero and no channel skips, JES2 backspaces the output to the beginning of the data set. This happens regardless of the value specified for *pages* (The line count for a data set is specified by the LINECT parameter on the PRINTDEF initialization statement or the LINECT parameter on the /*JOBPARM JES2 control statement, /*OUTPUT JES2 statement, in the JOB statement accounting field, or on the OUTPUT JCL statement.)

For the 3800 printer running in JES mode, specifying 1-9999 causes backspacing of the output for the specified number of physical pages.

For FSS mode devices, specifying 1-99999999 causes backspacing of the output for the specified number of sides. When simplex printing, there is one side per sheet of paper. When duplex printing, there are two sides per sheet of paper.

Each page in a copy group (a collection of contiguous pages representing multiple copies of a data set to be printed) is counted as a separate page. You can backspace all the way to the beginning of the data that is currently being stacked. Because multiple jobs can be active concurrently on the 3800, the backspace could require crossing data set or job boundaries.

PRTnnnn
The local printer on which JES2 backspaces output.

Rnnnn.PRm
The remote printer on which JES2 backspaces output.

Authority Required

This command requires **device** authority. The description of the $T RDRnn command explains how to ensure the proper MVS system command group authority is assigned.

This command requires **update** security access authority. For a description of assigning command input authority, see *z/OS JES2 Initialization and Tuning Guide*.

Processing Considerations

- If you omit D, C, and nnnn, one page is the default backspace.
- For data sets with no channel skips and a line count of zero, you specify the number of lines in a page by either:
  - The CKPTLNS parameter on the /*OUTPUT JES2 statement.
  - The CKPTLINE parameter on the PRTnnnn and Rnnnn.PRm initialization statements, the OUTPUT JCL statement, or using the $T device command.
- The amount of output between checkpoints is controlled by either:
  - The CKPTLNS and CKPTPGS parameters on the /*OUTPUT JES2 statement.
  - The CKPTLINE and CKPTPAGE parameters on the PRTnnnn and Rnnnn.PRm initialization statements, the OUTPUT JCL statement, or using the $T device command.
- Restarted output that is selected by an FSS printer controlled by PSF cannot be backspaced beyond the point of interruption.
- For the 3800 printer, the backspacing is relative to the page that is visible at the transfer station.
- The $B command is useful if a printer jam causes one line to be overprinted multiple times. After you clear the jam, you can backspace to a point in the data set before the printer jam and resume printing.
- For impact printers, the number of pages to backspace is affected by channel skips. JES2 counts all channel skips as new pages.

  Note: The printer must be physically stopped before entering a backspace command for that printer in order to maintain proper line count displays via $DU,PRTx.

Scope

Single Member. The values supplied for this command will be in effect for this member only. There is no need to have this command issued to all members of the MAS.

Messages

The $HASP170 message displays the status of output processing on the specified printer.

Examples

1
```
$b r9.pr1,c
```

```
$HASP170  R9.PR1 BACKSPACED
```

JES2 backspaces the output on printer 1 of remote 9 to the most recent checkpoint. If no checkpoint exists, or if the page currently being printed precedes the most recent checkpoint (this can happen if the data set was previously repositioned behind the most recent checkpoint by another $B command), JES2 backspaces the

output to the beginning of the data set. For example, if the most recent checkpoint was taken at the top of page 145 but the printer is currently printing page 141, JES2 will backspace the output to the beginning of the data set.

```
2  $b r11.pr1,c,10

$HASP170 R11.PR1 BACKSPACED
```

JES2 backspaces the output on printer 1 of remote 11 ten pages behind the most recent checkpoint. If no checkpoint exists, or if the page currently being printed precedes the most recent checkpoint, JES2 backspaces the output to the beginning of the data set.

$B PUNnn and $B Rnnnn.PUm - Logically Backspace Punch Output

Function

To backspace punch output a specified number of cards, to the beginning of a data set, or to the most recent checkpoint.

Syntax

```
►►──$B──┬─PUNnnnn─┬──┬──────┬──┬──────────────────────┬──┬──────┬──────────────►◄
        └─Rnnnn.PUm─┘  └─,─D─┘  └─,─C──┬──────────┬──┘  └─,─nnnn─┘
                                       └─,─nnnn───┘
```

Parameters

C The output is backspaced to the most recent checkpoint. JES2 assumes that all data up to the most recent checkpoint has punched successfully. Backspacing to the most recent checkpoint is the only way JES2 can ensure no loss of data for remote punches.

You can also specify nnnn with C, which causes JES2 to backspace the output nnnn cards further than the most recent checkpoint.

D The output is backspaced to the beginning of the data set. Punching resumes at the beginning of the data set.

nnnn
The output is backspaced nnnn (1-9999) cards.

PUNnnnn
The local punch on which JES2 backspaces output.

Rnnnn.PUm
The remote punch on which JES2 backspaces output.

Authority Required

This command requires **device** authority. The description of the $T RDRnn command explains how to ensure the proper MVS system command group authority is assigned.

This command requires **update** security access authority. For a description of assigning command input authority, see *z/OS JES2 Initialization and Tuning Guide*.

Processing Considerations

- If you omit D, C, and nnnn, one card is the default backspace.
- The amount of output between checkpoints is controlled by either:
  - The CKPTLNS and CKPTPGS parameters on the /*OUTPUT JES2 statement.
  - The CKPTLINE and CKPTPAGE parameters on the PRTnnnn and Rnnnn.PRm initialization statements, the OUTPUT JCL statement, or using the $T device command.
- The $B command is useful if a punch jam causes a loss of punched cards. After you clear the jam, you can backspace to a point in the data set before the punch jam and resume punching.

Scope

Single Member. The values supplied for this command will be in effect for this member only. There is no need to have this command issued to all members of the MAS.

Messages

The $HASP170 message displays the status of output processing on the specified punch.

Examples

1 `$b r9.pu1,c`

```
$HASP170 R9.PU1 BACKSPACED
```

JES2 backspaces the output on punch 1 of remote 9 to the most recent checkpoint. If no checkpoint exists, or if the card currently being punched precedes the most recent checkpoint (this can happen if the punch was previously repositioned behind the most recent checkpoint by another $B command), JES2 backspaces the output to the beginning of the data set. For example, if the most recent checkpoint was taken at card 250 and card 245 is currently being punched, JES2 will backspace the output to the beginning of the data set.

2 `$b r11.pu1,c,10`

```
$HASP170 R11.PU1 BACKSPACED
```

JES2 backspaces the output on punch 1 of remote 11 ten cards behind the most recent checkpoint. If there is no checkpoint, or if the card currently being punched precedes the most recent checkpoint, JES2 backspaces the output to the beginning of the data set.

$C A - Cancel Automatic Commands

Function

To cancel the processing of all or specified automatic command entries and delete those entries.

Syntax

```
►►──$C A──┬──,ALL──┬──────────────────────────────────────────────────►◄
          └──cccc──┘
```

Parameters

ALL
JES2 cancels the processing of all automatic command entries you are authorized to cancel and deletes those entries.

Note: Put a comma before this parameter.

cccc
The 1 to 4 character identifier of an automatic command entry. JES2 cancels the processing of the specified command entry and then deletes the entry.

Note: Do **not** put a comma before this parameter.

Authority Required

This command requires **system** authority. The description of the $T RDRnn command explains how to ensure the proper MVS system command group authority is assigned.

This command can be issued with varying security access authorities. For a description of assigning command input authority, see *z/OS JES2 Initialization and Tuning Guide*.

Scope

Single Member. The values supplied for this command will be in effect for this member only.

Depending on your installation's setup, however, you might want this command to be applied to all members of the MAS (to ensure a consistent environment across the MAS). If so, you can use the MVS ROUTE *ALL command to issue this command to all active members (if the JES2 command character is the same on all members). See *z/OS MVS System Commands* for more information on using the ROUTE *ALL command.

Messages

The $HASP000 message indicates JES2 has accepted the command.

Examples

1
```
$c a,all

$HASP000 OK
```

JES2 cancels the processing of all automatic command entries you are authorized to cancel and then deletes those entries.

2 `$c a5`

```
$HASP000 OK
```

JES2 cancels the processing of all automatic command entries associated with character identifier 5.

$C Job - Cancel a Job

Function

Use this command to:

- Cancel jobs or TSU sessions on any member of the MAS and, if desired, provide a storage dump.
- Immediately cancel jobs, STCs, or TSU sessions currently waiting for, or actively in, conversion.
- Cancel the output of:
  - jobs
  - started tasks
  - TSU sessions

  on any member in the MAS.

Syntax

```
►►─$C──┬─Job──┬──┬──────────────────────────────────────────────►
       ├─JOBQ─┤  ├─nn──┬──────────┬──────────────────────────────┤
       ├─JQ───┤  │      └─-──┬─mm─┬┘                              │
       ├─Stc──┤  │            └─*──┘                              │
       └─Tsu──┘  ├─'job'──────────────────────────────────────────┤
                 │      ┌──,──────────────────────────────┐      │
                 │      ▼                                 │      │
                 └─(────┴─┬─nn─┬──┬──────────┬──┬──────────┬─┴─)──┘
                          │ *  │  └─-──┬─mm─┬┘  │          │
                          │    │       └─*──┘   │          │
                          ├─job────────────────┤          │
                          └─'job'──────────────┘          │

►──┬──────────────────────────────┬──┬──────────────────────────┬──►◄
   ├─ Selection limiting keywords ─┤  ├─ Modification keywords ─┤
```

Modification keywords:

```
├──┬──────────┬──────────────────────────────────────────────────┤
   └─,Purge───┘
```

Selection limiting keywords:

```
├──┬──────────────────────────┬──┬──────────────────────────────────────►
   ├─,──┬──────┬─ARMRESTART───┤  ├─,──┬──────┬─CMDauth──┬──────┬─cmdauth──┬──┤
   │    └─/────┘              │  │    └─/────┘          └─^=───┘          │  │
   │                          │  │                                        │  │
   │                          │  │                      ┌──,──────────┐   │  │
   │                          │  │                      ▼             │   │  │
   │                          │  │                 ┌─(────┬─(1)──────┴─)─┘  │
   │                          │  │                 │    └─cmdauth──────┘    │
   │                          │  │                 └────────────────────────┘
   │                          │  │
   │                          │  │
   │                          │  │
```

```
►──┬──────────────────────────────────────────────────────────────────────────────────────────────────────────────►
   │ ,┬──────┬─JM──────────┬─┬──────┬─jobmask─┬   │ ,┬──────┬─PROTected─┬
   │  │ /    │             │ │ =    │         │   │  │ /    │           │
   │  │      │             │ │ ^=   │         │   │  │      │           │
   │  │      │             │ │ >    │         │   │  │      │           │
   │  │      │             │ │ <    │         │   │  │      │           │
   │  │      │             │ │      │         │   │  │      │           │
   │  │      │             │ │      │         │   │  │      │           │
   │  │      │             │ │      
```

- If they are currently in conversion
- After they have completed execution.

To cancel a started task in execution, you must use the MVS CANCEL command.

Tsu
A time-sharing user or range of time-sharing users is to be cancelled.

Age|DAys<days | Age|DAys>days
Specifies the age of affected jobs in days. Only jobs more (with DAYS>nn) or less (with DAYS<nn) than the specified number of days in age are affected, The days are counted from the current hour.

ARMRESTART
Specify ARMRESTART to request that the automatic restart management automatically restart each specified job after it is cancelled, if that job is registered with the automatic restart management. ARMRESTART is ignored if the job is not executing or is not registered with the automatic restart management.

ARMRESTART is mutually exclusive with PURGE.

Dump|D
If the job is waiting for conversion, actively in conversion, or in execution, JES2 provides a storage dump.

CMDauth=(auth1{,auth2})
Only the jobs that can be affected from the specified remote(s) or node(s) will be cancelled. The valid specifications are:

LOCAL|ANYLOCAL
Only the local devices at the local node can affect the output.

Nnnnn|nodename
Only local devices at the specified node can affect the output.

Rnnnn
Only the specified remote device can affect the output.

NnnnnRnnnn|nodename.Rnnnn
Only the specified remote device at the specified remote node can affect the output.

destid
A destid corresponding to any of the above remote devices.

Note: Specification of the CMDAUTH filter does not override the authority of the console from which the command is issued; both the authority of the console and the specified CMDAUTH filter must match for the job to be affected.

Hours=hours
Specifies the age of affected jobs in hours. Only jobs more (with HOURS>nn) or less (with HOURS<nn) than the specified number of hours in age are affected.

JM|JOBMASK=jobmask
Specifies 1 to 8 alphanumeric, special ($, #, or @) or wildcard characters (or a combination of them) that can be used to select a subset of jobs whose job name matches this combination of characters (mask). For additional information, see “Using Wildcards” on page 93.

PROTected
Indicates that **all** output groups, including output groups that have been specified ‘protected’, should be purged. The ’protected’ attribute is assigned to programs running in a transactional environment such as APPC or OMVS, where the transaction output is associated with the initiators like ASCHINIT or BPXAS. The ‘protected’ attribute for output can also be assigned to jobs by JES2 installation exits. This parameter is only valid when used with the PURGE parameter.

Purge
JES2 purges the job output.

Notes:

1. The P operand must be specified to terminate jobs that are already in the output phase.
2. $C with the P operand will not purge a job with affinity to an inactive processor until the job’s affinity has been changed with the $TJ,S= command.
3. If the TSO/E user has affinity to an inactive member, the TSO/E notify message will not be issued when you specify the P operand.
4. $C with the P operand is ignored for output that is active on an FSS printer.

PURGE is mutually exclusive with ARMRESTART.

Queue={CNV|INPUT|OUT|PPU|PURGE|RCV| SETUP|SPIN|XEQ|XMT}
Only jobs on the specified job queue are to be cancelled.

CNV
Only jobs awaiting conversion are to be cancelled.

INPUT
Only jobs on the JES2 $INPUT queue are to be cancelled.

OUT
Only jobs awaiting output processing are to be cancelled.

PPU
Only jobs awaiting print/punch processing are to be cancelled.

PURGE
Only jobs awaiting purge processing are to be cancelled.

RCV
Only jobs on the JES2 $RECEIVE queue are to be cancelled.

SETUP
Only jobs on the JES2 $SETUP queue are to be cancelled.

SPIN
Only jobs awaiting spin processing are to be cancelled.

XEQ
Only jobs awaiting execution are to be cancelled.

XMT
Only jobs queued for network transmission are to be cancelled.

REBUILD={No|Yes}
Jobs on the rebuild queue are to be cancelled (Yes) or not cancelled (No).

SPL|SPOOL={Percent|%|Tgs|Volumes}
Only jobs with specific SPOOL characteristics are to be cancelled:

Percent|%
Only jobs using more (with %>nn) or less (with %<nn) than the specified percentage of the total available spool space are to be cancelled.

Tgs
Only jobs using more (with Tgs>nn) or less (with Tgs<nn) than the specified number of track groups are to be cancelled.

Volumes=(v1,v2,...)
Only jobs which have allocated spool space on the specified spool volume(s) are to be cancelled.

TYPE={JOB|STC|TSU}
Indicates whether only batch jobs (JOB), started tasks (STC), or time-sharing users (TSU) are to be cancelled.

XEQNode=xeqnode
Only jobs which are destined to execute at the specified node, or which have already executed at the specified node, are to be cancelled. The node name may be specified using the decimal node number (Nnnnnn) or an EBCDIC node name.

Authority Required

This command requires **job** authority. The description of the $T RDRnn command explains how to ensure the proper MVS system command group authority is assigned.

This command requires **update** security access authority. For a description of assigning command input authority, see *z/OS JES2 Initialization and Tuning Guide*.

Processing Considerations

- If the job does not cancel, reenter the command.
- $C cannot cancel messages that are either being spooled for a remote or being printed by a remote.
- When canceling jobs or TSUs in execution, the $C command results in an MVS CANCEL command. This allows other subsystems to monitor the canceling of jobs and, if necessary, take appropriate action.

  The MVS CANCEL command may also be used to cancel jobs in execution but the MVS command must be entered on the system where the job is running; therefore, using the $C command gives you more flexibility.
- When canceling a TSU or STC that is waiting for conversion, or actively in conversion, the $C command must be entered on the same member where the TSU or STC is active.
- When canceling a job, TSU or STC that is waiting for, or actively in conversion, with the DUMP parameter also specified, be aware that the dump produced will be processed using Dump Analysis and Elimination (DAE).
- For additional capabilities, refer to the descriptions of MVS CANCEL and STOP in *z/OS MVS System Commands*.

Scope

MAS-Wide. This command has an effect across the entire MAS.

Messages

The $HASP890 message displays the status of the job.

The $HASP003 message indicates that you have issued the $C JOB command to cancel the specified job(s) without issuing the ,PROTECTED operand.

Examples

1 `$c j3`

```
JOB00003  $HASP890 JOB(INFN2)
$HASP890 JOB(INFN2)     STATUS=(EXECUTING/SPLB),CLASS=A,
$HASP890                PRIORITY=15,SYSAFF=(SPLB),HOLD=(NONE),
$HASP890                CANCEL=YES
JOB00003 $HASP395 INFN2   ENDED
$HASP309    INIT  1 INACTIVE ******** C=ABCDEFGHI
```

JES2 cancels job 3.

2 `$cj 'infn1',d`

```
JOB00032  $HASP890 JOB(INFN2)
$HASP890 JOB(INFN2)     STATUS=(EXECUTING/SPLB),CLASS=A,
$HASP890                PRIORITY=15,SYSAFF=(SPLB),HOLD=(NONE),
$HASP890                CANCEL=YES
JOB00032  IEA995I SYMPTOM DUMP OUTPUT
SYSTEM COMPLETION CODE=122
TIME=21.15.51  SEQ=00037  CPU=0000  ASID=0013
PSW AT TIME OF ERROR  078D2000   00006EEE  ILC 2  INTC 14
  ACTIVE LOAD MODULE=GO        ADDRESS=00006EB8  OFFSET=00000036
  DATA AT PSW  00006EE8 - 80006F50  0A144110  00014120
  GPR  0-3  000001C0  00000001  00000001  009F69A4
  GPR  4-7  009F6980  009F3E88  009D3FF8  FD000000
  GPR  8-11 009FF1D0  809F3BA8  00006F08  009F3E88
  GPR 12-15 40006EBE  00006F08  40006EE8  00000000
  END OF SYMPTOM DUMP
JOB00032  $HASP375 INFN1    ESTIMATED LINES EXCEEDED
JOB00032  $HASP375 INFN1    ESTIMATE EXCEEDED BY    2,000  LINES       1%
SPOOL
JOB00032  IEF450I  INFN1 GO STEP1 - ABEND=S222 U0000 REASON=00000     000
          TIME=21.16.25
JOB00032  $HASP395 INFN1     ENDED
          $HASP099 ALL AVAILABLE FUNCTIONS COMPLETE
```

JES2 cancels the job named INFN1, which is currently in execution, and issues a storage dump.

3 `$CJ100-105,JM=?EBG*`

```
JOB00102  $HASP890 JOB(IEBGENER)
$HASP890 JOB(IEBGENER)  STATUS=(AWAITING OUTPUT),CLASS=A,
$HASP890                PRIORITY=1,SYSAFF=(ANY),HOLD=(NONE),
$HASP890                CANCEL=YES
JOB00103  $HASP890 JOB(IEBGENEZ)
$HASP890 JOB(IEBGENEZ)  STATUS=(AWAITING OUTPUT),CLASS=A,
$HASP890                PRIORITY=1,SYSAFF=(ANY),HOLD=(NONE),
$HASP890                CANCEL=YES
```

JES cancels jobs that fall within the range of jobs 100-105, whose job name includes EBG as the second, third and fourth characters.

$C Lnnnn.xxn - Cancel NJE Device Activity

Function

To cancel a job or SYSOUT data currently being received or transmitted over an NJE line.

Syntax

```
►►──$C──┬─Lnnnn.JRn─┬──┬──────────────┬──────────────────────────────────►◄
        ├─Lnnnn.JTn─┤  ├─,Lnnnn.JRn──┤
        ├─Lnnnn.SRn─┤  ├─,Lnnnn.JTn──┤
        └─Lnnnn.STn─┘  ├─,Lnnnn.SRn──┤
                       └─,Lnnnn.STn──┘
```

Parameters

Lnnnn.JRn
The job receiver on line nnnn currently receiving the job. JES2 immediately queues the job for output. Any subsequent data for the job is ignored until JES2 reaches the end of the current file.

Lnnnn.JTn
The job transmitter on line nnnn currently transmitting the job. JES2 stops transmission of the job and immediately queues the job for output.

Lnnnn.SRn
The SYSOUT receiver on line nnnn currently receiving the SYSOUT data. JES2 purges the data already received, and any subsequent data is ignored until end of file.

Lnnnn.STn
The SYSOUT transmitter on line nnnn currently transmitting the SYSOUT data. JES2 stops the current transmission and purges the SYSOUT data.

Authority Required

This command requires **device** authority. The description of the $T RDRnn command explains how to ensure the proper MVS system command group authority is assigned.

This command requires **update** security access authority. For a description of assigning command input authority, see *z/OS JES2 Initialization and Tuning Guide*.

Processing Considerations

Because cancelation of receivers does not stop actual transmission of data, the operator at the receiving node can elect to cancel job or SYSOUT reception by having the operator at the transmitting end cancel the transmitter.

Scope

Single Member. The values supplied for this command will be in effect for this member only. There is no need to have this command issued to all members of the MAS.

Messages

$HASP523 indicates the job, which was being transmitted by the job transmitter, has been cancelled.

$HASP533 indicates the job that has been cancelled for the SYSOUT transmitter.

$HASP543 indicates that the job has been cancelled for either the SYSOUT receiver or the job receiver.

$HASP545 indicates that the job has been cancelled for the network SYSOUT receiver or the network job receiver.

Example

```
1  $c l4.jr1

  JOB00005 $HASP543 MYJOB L4.JR1 DELETED
```

JES2 queues the job currently being received by job receiver 1 on line 4 for output. Any subsequent data for the job is ignored until end of file.

$C O Job - Cancel Output

Function

To cancel specific output groups or individual job output elements created by a job.

Syntax

```
►►─$C O─┬─Job──┬─┬─nn──┬──────┬──┬──────┬──┬──────┬──┬─────────────────────►
        ├─JOBQ─┤ │     └─-─┬─mm─┘  │      │  │      │  │  ┌─,─┬─────┬─ALL─┘
        ├─JQ───┤ │         └─*──┘  │      │  │      │  │  └─/─┘     │
        ├─Stc──┤ ├─'job'──────────┤      │  │      │  │            │
        └─Tsu──┘ │                 │      │  │      │  │            │
                 └─(─┬─nn─┬──────┬─┬─────┬─┬─────┬─┬─┬─┬─────────┬─┬─)─┘
                     │ *  │      │ │     │ │     │ │ │ │         │ │
                     │    └─-─mm─┘ │     │ │     │ │ │ │         │ │
                     │        *    │     │ │     │ │ │ │         │ │
                     ├─job─────────┤     │ │     │ │ │ │         │ │
                     └─'job'───────┘     │ │     │ │ │ │         │ │
                                         │ │     │ │ │ │         │ │
                                         │ │     │ │ │ │         │ │
                                         
```

```
►──┬──────────────────────────────────────────────────────────────────────────────────────────────────────────────────────────────────►
   │ ┌──────────────────────────────────────────────────────────────────────────────────────────────────────────────────────────────┐
   └─┼─,──┬──────┬──REBUILD──┬──────┬──┬────────┬──┬──────────────────────────────────────────────────────────────────────────────┼
     │    └──/───┘           └──=───┘  └──No────┘  │ ┌──────────────────────────────────────────────────────────────────────────┐ │
     │                                               └─┼─,──┬──────┬──RECORDS──┬──────┬──┬──────────┬──┬──────────────────────────┼ │
     │                                                 │    └──/───┘           └──=───┘  └──records─┘  │ ┌──────────────────────┐ │ │
     │                                                 │                                              │ │                      │ │ │
     │                                                 │                                              │ │                      │ │ │
     │                                                 │                                              │ │                      │
```

Rnnnn
Only the specified remote device can affect the output.

NnnnnRnnnn|nodename.Rnnnn
Only the specified remote device at the specified remote node can affect the output.

destid
A destid corresponding to any of the above remote devices.

Note: Specification of the CMDAUTH filter does not override the authority of the console from which the command is issued; both the authority of the console and the specified CMDAUTH filter must match for the job to be affected.

Dest|Routecde=routecde
The destination assigned to the job output element(s). Only job output destined for ″dest″ is cancelled. You may specify a remote destination (workstation), another node, or a specific local device. The value for all routing numbers can range from 1 to 32767. Use parentheses if more than one route code is specified.

If this command originates from another node in the network and the D|ROUTECDE= operand does not specify a node (first-level destination), the receiving node defaults the first-level destination to the node were the command originated.

If this command is sent to another node in the network using the $N command, be aware that the receiving node will default the node (first-level destination) of the D|ROUTECDE= operand to the sending node. If another node is desired, specify a destination on the D|ROUTECDE= operand that will resolve to the desired node (first-level destination) at the receiving node.

Notes:

1. NODENAME=REQUIRED on the DESTDEF initialization statement will cause JES2 to require that a userid be prefixed with a node name.
2. Greater than (> or >=) and less than (< or <=) filters may be used in conjunction to support route code ranges. For example, you could specify the filters R>=R1,R<=R7 to affect output for all remotes in the range R1 to R7. Note that:
   - The destination being filtered upon is converted to its binary equivalent prior to the comparison.
   - Open-ended ranges (for example, a > filter without a < filter, or a < filter without a > filter) are not allowed.
   - When using nodal ranges, a specification of ″nodename.*″ must be used. Only the nodal routing of the output will be compared.

The following specifications are valid:

LOCAL|ANYLOCAL
Indicates that jobs are to be printed or punched at the local node.

destid Indicates that jobs are to be printed or punched at the specified node(s). You can specify this location by an alias for the name of a node. If destid is specified alone, it refers to both the node and the remote.

Nnnnn|nodename
Indicates that jobs are to be printed or punched at the specified node(s). You can specify a node using the decimal node identifier or an EBCDIC nodename.

NnnnnRmmmm|node.remote|node.userid
Indicates routing to the remote Rmmmm at the node Nnnnn. Rmmmm can also be specified as RMmmmm or RMTmmmm.

Ummmm
Indicates special local routing.

node.destid
Indicates a destination at the specified node. The destid refers to both the node and the remote. The node specified in the destid must be the same as the node portion of the route code. If the number of the remote is reassigned, you can use the destid to send to this node.

remote
Indicates routing to a remote. Remote can be specified in any of the following ways:

LOCAL|ANYLOCAL
Indicates that jobs are to be printed or punched at the local node.

Rmmmm
Indicates routing to the specified remote. Rmmmm can also be specified as RMmmmm or RMTmmmm.

destid Indicates routing to a destid referring to a remote.

userid Indicates routing to a valid TSO userid.

node.*
Indicates that the node name is to be modified to the specified node name, but the remote name will remain the same.

***** Indicates that the node name is to be modified to the local node name, but the remote name will remain the same.

HELD
Specifies that only held output is to be cancelled.

HOLD={NONE|OPER|SYS}
Only output groups with the specified hold type (OPER, SYS, or NONE) are to be cancelled.

HOLDRC
Only output groups with the specified system hold reason code are to be cancelled (when HOLD=SYS).

Hours=hours
Specifies the age of affected output in hours. Only output more (with HOURS>nn) or less (with HOURS<nn) than the specified number of hours in age are affected.

JOBMASK|JM=jobmask
Specifies 1 to 8 alphanumeric, special ($, #, or @) or wildcard characters (or a combination of them) that can be used to select a subset of jobs whose job name matches this combination of characters (mask). For additional information, see “Using Wildcards” on page 93.

Notes:

1. This is a positional parameter. Specify this following the job_id (JOB, STC, or TSU), or JOBQ parameter.
2. The JOBMASK parameter is not valid with the *'jobname '* parameter.

OUTGrp=grpid[.joeid1[.joeid2]]
The job output group or the job output element that is cancelled.

grpid
The 1 to 8 alphameric group ID that is either specified by the user in the JCL or generated by JES2. If you specify only group ID (OUTGRP=grpid) on this command, JES2 cancels all the job output elements in that output group.

joeid1
A number assigned by JES2 to distinguish between job output elements within the output group. If you specify only group ID and the first qualifier (OUTGRP=grpid.joeid1) on this command, JES2 cancels all the copies of the specified job output element in that output group.

joeid2
A number assigned by JES2 to distinguish between several copies of grpid.joeid1. If you specify group ID and both qualifiers (OUTGRP=grpid.joeid1.joeid2) on this command, JES2 cancels only the specified copy (joeid2) within the job output element (joeid1) in that output group.

Note: The OUTGRP parameter is positional and must immediate follow the jobid (JOB, STC, TSU), JOBQ or 'jobname' (or JOBMASK if coded) parameter.

PAGES
Only output groups with the specified number of pages are to be cancelled.

PROTected
Indicates that **all** specified output groups, including output groups that have been specified 'protected', should be purged. The 'protected' attribute is assigned to programs running in a transactional environment such as APPC or OMVS, where the transaction output is associated with the initiators like ASCHINIT or BPXAS. The 'protected' attribute can also be assigned to jobs by JES2 installation exits.

Note: Since the OUTGRP= parameter identifies the output to be cancelled, you do not need to specify PROTECTED with this command, even for output that is protected.

Queue=queue
Only output in the specified output class(es) is to be cancelled. Up to 36 output classes may be listed.

READY
Specifies that only ready output is to be cancelled.

REBUILD={No|Yes}
Output on the rebuild queue is to be cancelled (Yes) or not cancelled (No).

RECORDS
Only output groups with the specified number of records are to be cancelled.

Authority Required

This command requires **job** authority. The description of the $T RDRnn command explains how to ensure the proper MVS system command group authority is assigned.

This command requires **update** security access authority. For a description of assigning command input authority, see *z/OS JES2 Initialization and Tuning Guide*.

Processing Considerations

If you want to cancel both a job and its output, see "$C Job - Cancel a Job" on page 168.

Scope

MAS-Wide. This command has an effect across the entire MAS.

Messages

The $HASP686 displays all the output groups that are cancelled.

Examples

1 `$c o j'fred',outgrp=1.1.1`

```
JOB00012 $HASP686 OUTPUT(FRED)     OUTGRP=1.1.1 CANCELLED
```

JES2 cancels the specified output group.

2 `$c o jq,q=b,r=r1`

```
JOB00012 $HASP686 OUTPUT(FRED)     OUTGRP=1.1.1 CANCELLED
JOB00012 $HASP686 OUTPUT(FRED)     OUTGRP=2.1.1 CANCELLED
JOB00016 $HASP686 OUTPUT(WILMA)    OUTGRP=1.1.1 CANCELLED
JOB00017 $HASP686 OUTPUT(BARNEY)   OUTGRP=6.1.1 CANCELLED
JOB00017 $HASP686 OUTPUT(BARNEY)   OUTGRP=7.1.1 CANCELLED
```

JES2 cancels all class B output destined for remote workstation 1.

3 `$c o jq,all,a>8`

```
JOB00012 $HASP686 OUTPUT(FRED)     OUTGRP=1.1.1 CANCELLED
JOB00016 $HASP686 OUTPUT(WILMA)    OUTGRP=1.1.1 CANCELLED
JOB00017 $HASP686 OUTPUT(BARNEY)   OUTGRP=7.1.1 CANCELLED
```

JES2 cancels all ouput in the system more than 8 days old.

4 `$c o jq,r=denver,q=bk`

```
TSU00027 $HASP686 OUTPUT(FRED)     OUTGRP=1.1.1 CANCELLED
TSU00027 $HASP686 OUTPUT(FRED)     OUTGRP=2.1.1 CANCELLED
TSU00027 $HASP686 OUTPUT(FRED)     OUTGRP=3.1.1 CANCELLED
JOB00047 $HASP686 OUTPUT(BARNEY)   OUTGRP=6.1.1 CANCELLED
JOB00047 $HASP686 OUTPUT(BARNEY)   OUTGRP=7.1.1 CANCELLED
```

JES2 cancels all class output in classes B and K destined for DENVER. (DENVER is an installation-defined name, which must equate to one of the valid destination forms.)

$C OFFn.xx - Cancel a Spool Offload Transmitter/Receiver

Function

To cancel the job/output currently active on the specified offload transmitter/receiver.

Syntax

```
►►──$C──┬─OFFn.JR─┬──┬──────────┬──────────────────────────────────────►◄
        ├─OFFn.JT─┤  ├─,OFFn.JR─┤
        ├─OFFn.SR─┤  ├─,OFFn.JT─┤
        └─OFFn.ST─┘  ├─,OFFn.SR─┤
                     └─,OFFn.ST─┘
```

Parameters

OFFn.JR
The job on the offload job receiver is cancelled. The subscript specifies a numeric value (1-8) of the associated offload device.

OFFn.JT
The job on the offload job transmitter is cancelled. The subscript specifies a numeric value (1-8) of the associated offload device.

OFFn.SR
The job on the offload sysout receiver is cancelled. The subscript specifies a numeric value (1-8) of the associated offload device.

OFFn.ST
The job on the offload sysout transmitter is cancelled. The subscript specifies a numeric value (1-8) of the associated offload device.

Authority Required

This command requires **device** authority. The description of the $T RDRnn command explains how to ensure the proper MVS system command group authority is assigned.

This command requires **control** security access authority. For a description of assigning command input authority, see *z/OS JES2 Initialization and Tuning Guide*.

Processing Considerations

- OFFn.JT|JR|SR

  JES2 causes the job on the specified device to be cancelled and deleted from JES2 spool. Processing continues by selecting the next job eligible to be processed by the device.
- OFFn.ST

  The output groups selected according to the work selection criteria of the SYSOUT transmitter are cancelled and deleted from the queue from which they were selected. The transmitter continues to select the next job.

Scope

Single Member. The values supplied for this command will be in effect for this member only. There is no need to have this command issued to all members of the MAS.

Messages

The $HASP000 message indicates JES2 has accepted the command. Upon completion, JES2 issues a message to indicate that the job on the device has been deleted.

Examples

1 `$c off1.jt, off1.st`

```
$HASP000 OK
$HASP523 jobname  -- OFF1.JT DELETED
$HASP523 jobname  -- OFF1.ST DELETED
```

JES2 cancels the processing of the job on offload job transmitter 1 and deletes the job from the spool; JES2 cancels the job on offload sysout transmitter 1 and deletes the output group currently being processed.

2 `$c off2.jr, off3.sr`

```
$HASP000 OK
$HASP545 OFF2.JR SKIPPING TO END-OF-JOB
$HASP543 jobname  -- OFF2.JR DELETED
$HASP545 OFF3.SR SKIPPING TO END-OF-JOB
$HASP543 jobname  -- OFF3.SR DELETED
```

JES2 cancels the processing of the jobs on offload job receiver 2 and sysout receiver 3, and deletes the jobs from the spool.

$C PRTnnnn and $C Rnnnn.PRm - Cancel Printer Output

Function

To cancel the output currently being printed.

Syntax

```
►►──$C──┬─PRTnnnn──────┬──┬──────────────┬──────────────────────────────────►◄
        └─Rnnnn.PRm────┘  ├─,PRTnnnn─────┤
                          └─,Rnnnn.PRm───┘
```

Parameters

PRTnnnn
The local printer currently printing the output.

Rnnnn.PRm
The remote printer currently printing the output.

Authority Required

This command requires **device** authority. The description of the $T RDRnn command explains how to ensure the proper MVS system command group authority is assigned.

This command requires **update** security access authority. For a description of assigning command input authority, see *z/OS JES2 Initialization and Tuning Guide*.

Processing Considerations

For the 3800 printer, JES2 cancels the output group that is visible at the transfer station.

Scope

Single Member. The values supplied for this command will be in effect for this member only. There is no need to have this command issued to all members of the MAS.

Messages

The $HASP170 message displays the status of output processing on the specified printer.

Example

1 `$c prt5`

```
$HASP170 PRT5 DELETED
```

Printer 5 stops printing the current output group and JES2 purges the output. Printer 5 resumes printing the next available output based on its work selection criteria.

$C PUNnn and $C Rnnnn.PUm - Cancel Punch Output

Function

To cancel the output currently being punched.

Syntax

```
►►─$C─┬─PUNnn──────┬─┬──────────────┬──────────────────────────────────►◄
      └─Rnnnn.PUm──┘ │ ┌─,PUNnn─────┐│
                     ├─└─,Rnnnn.PUm─┘│
                     └──────────────┘
```

Parameters

PUNnn
The local punch currently processing the output.

Rnnnn.PUm
The remote punch currently processing the output.

Authority Required

This command requires **device** authority. The description of the $T RDRnn command explains how to ensure the proper MVS system command group authority is assigned.

This command requires **update** security access authority. For a description of assigning command input authority, see *z/OS JES2 Initialization and Tuning Guide*.

Scope

Single Member. The values supplied for this command will be in effect for this member only. There is no need to have this command issued to all members of the MAS.

Messages

The $HASP170 message displays the status of output processing on the specified punch.

Example

1 `$c pun4`

```
$HASP170 PUN4 DELETED
```

Punch 4 stops punching the current output group and JES2 purges the output. Punch 4 then begins punching the next available output group.

$C RDR and $C Rnnnn.RDm - Cancel Reader Activity

Function

To cancel the job currently being read.

Syntax

```
►►──$C──┬─RDRnn──────┬──┬──────────────┬──────────────────────────────────►◄
        └─Rnnnn.RDm──┘  ├─,RDRnn───────┤
                        └─,Rnnnn.RDm───┘
```

Parameters

RDRnn
The local reader currently reading the job.

Rnnnn.RDm
The remote reader currently reading the job.

Authority Required

This command requires **device** authority. The description of the $T RDRnn command explains how to ensure the proper MVS system command group authority is assigned. The $T RDI command sets the command authority for internal readers.

This command requires **update** security access authority. For a description of assigning command input authority, see *z/OS JES2 Initialization and Tuning Guide*.

Scope

Single Member. The values supplied for this command will be in effect for this member only. There is no need to have this command issued to all members of the MAS.

Messages

$HASP119 indicates the input service processor has deleted the indicated job.

Example

1 `$c rdr1`

```
JOB00010 $HASP119 MYJOB DELETED
```

Reader 1 flushes the job currently being read and then continues reading the next valid job card.

$D A - Display Information About Currently Active Jobs

Function

To display information about:
- Active batch jobs
- Active started tasks
- Active time-sharing users
- Jobs being processed on unit record devices or spool offload devices

Syntax

```
►►─$D─A─┬─┬─,J|JOB─┬─┬─┬─,ALL──────────────┬─┬─┬─,V=volser─┬─────────────────────────►◄
        │ │─,S|STC─│ │ │─,memname(,memname)...─│ │ └───────────┘
        │ │─,T|TSU─│ │ └──────────────────────┘ │
        │ │─,X|XEQ─│ │                          │
        │ └─,D|DEV─┘ │                          │
        └────────────┘                          └──────────────────────────────────────
```

Parameters

A JES2 displays the job number, job name, status, class, priority, and active member name for all jobs of the requested job type that are active in the JES2 process requested (if one is specified), on the requested member.

Note: If you do not specify any other operands, JES2 displays information for batch jobs that are active on the member to which the entering console is attached.

J|JOB
JES2 displays information for active batch jobs.

S|STC
JES2 displays information for active started tasks.

T|TSU
JES2 displays information for active time-sharing users.

X|XEQ
JES2 displays information for active jobs currently in execution or conversion processing.

D|DEV
JES2 displays information for jobs currently being processed on a unit-record device or spool offload device.

Defaults:
- If neither XEQ nor DEV is specified and JOB is specified, both are assumed.
- If JOB, STC, or TSU is not specified, but XEQ or DEV is specified, then JOB, STC, and TSU are assumed.
- If nothing is specified, then JOB, XEQ, and DEV are assumed.

ALL
JES2 displays the above information for the selected groups (JOB, STC, TSU, DEV, XEQ) on all members in the multi-access spool configuration.

memname
The 1 to 4 character alphameric identifier of a member in a multi-access spool

configuration. JES2 displays the above information for the selected groups (JOB, STC, TSU, DEV, XEQ) on the specified member.

Default: If neither ALL nor the *memname* is specified, the member to which the entering console is attached is assumed as the *memname*.

V=volser
JES2 displays job information for all jobs that have data on the spool volume specified by volser.

Authority Required

This command requires **display** authority. The description of the $T RDRnn command explains how to ensure the proper MVS system command group authority is assigned.

This command requires **read** security access authority. For a description of assigning command input authority, see *z/OS JES2 Initialization and Tuning Guide*.

Scope

MAS-Wide. This command can display information about jobs on any or all members of the MAS, depending on the parameters you provide.

Messages

The $HASP890 message displays the current status of the indicated job.

Examples

1 `$da,dev,all`

```
JOB00013  $HASP890 JOB(OUT3000)
$HASP890 JOB(OUT3000)   STATUS=(ON PRT2/SPL2),CLASS=A,
$HASP890                PRIORITY=1,SYSAFF=(ANY),HOLD=(NONE)
```

JES2 displays all active jobs on a device. In the message, job OUT30000 on printer 2 has a JES2 scheduling priority of 1 on member SPL2.

2 `$da,all,v=spool3`

```
JOB00007  $HASP890 JOB(SPINLOOP)
$HASP890 JOB(SPINLOOP)  STATUS=(EXECUTING/SPL2),CLASS=A,
$HASP890                PRIORITY=9,SYSAFF=(ANY),HOLD=(NONE)
```

JES2 displays all active jobs that have space on the specified spool volume (3).

3 `$da,s,all`

```
STC00002  $HASP890 JOB(SYSLOG)
$HASP890 JOB(SYSLOG)    STATUS=(EXECUTING/SPL2),CLASS=STC,
$HASP890                PRIORITY=15,SYSAFF=(SPL2),HOLD=(NONE)
STC00004  $HASP890 JOB(INIT)
$HASP890 JOB(INIT)      STATUS=(EXECUTING/SPL2),CLASS=STC,
$HASP890                PRIORITY=15,SYSAFF=(SPL2),HOLD=(NONE)
STC00005  $HASP890 JOB(VTAM)
$HASP890 JOB(VTAM)      STATUS=(EXECUTING/SPL2),CLASS=STC,
$HASP890                PRIORITY=15,SYSAFF=(SPL2),HOLD=(NONE)
STC00008  $HASP890 JOB(INIT)
$HASP890 JOB(INIT)      STATUS=(EXECUTING/SPLB),CLASS=STC,
$HASP890                PRIORITY=15,SYSAFF=(SPLB),HOLD=(NONE)
```

JES2 displays information for all active started tasks in the MAS configuration.

4 `$da,s,splb`

```
STC00008  $HASP890 JOB(INIT)
$HASP890 JOB(INIT)      STATUS=(EXECUTING/SPLB),CLASS=STC,
$HASP890                PRIORITY=15,SYSAFF=(SPLB),HOLD=(NONE)
```

JES2 displays information for all started tasks active on the member identified AS SPLB.

5 `$da`

```
JOB00010  $HASP890 JOB(SPINTWO)
$HASP890 JOB(SPINTWO)   STATUS=(EXECUTING/SPLB),CLASS=A,
$HASP890                PRIORITY=9,SYSAFF=(SPLB),HOLD=(NONE)
```

JES2 displays information for batch jobs on member 2 (SPLB).

6 `$da,all`

```
JOB00007  $HASP890 JOB(SPINLOOP)
$HASP890 JOB(SPINLOOP)  STATUS=(EXECUTING/SPL2),CLASS=A,
$HASP890                PRIORITY=9,SYSAFF=(SPL2),HOLD=(NONE)
JOB00010  $HASP890 JOB(SPINTWO)
$HASP890 JOB(SPINTWO)   STATUS=(EXECUTING/SPLB),CLASS=A,
$HASP890                PRIORITY=9,SYSAFF=(SPLB),HOLD=(NONE)
```

JES2 displays information for batch jobs in the MAS configuration.

7 `$da,xeq`

```
STC00008  $HASP890 JOB(INIT)
$HASP890 JOB(INIT)      STATUS=(EXECUTING/SPLB),CLASS=STC,
$HASP890                PRIORITY=15,SYSAFF=(SPLB),HOLD=(NONE)
JOB00010  $HASP890 JOB(SPINTWO)
$HASP890 JOB(SPINTWO)   STATUS=(EXECUTING/SPLB),CLASS=A,
$HASP890                PRIORITY=9,SYSAFF=(SPLB),HOLD=(NONE)
```

JES2 displays information for all STCs, TSUs, and batch jobs executing on member 2 (SPLB).

8 `$da,xeq,all`

```
STC00002  $HASP890 JOB(SYSLOG)
$HASP890 JOB(SYSLOG)    STATUS=(EXECUTING/SPL2),CLASS=STC,
$HASP890                PRIORITY=15,SYSAFF=(SPL2),HOLD=(NONE)
STC00004  $HASP890 JOB(INIT)
$HASP890 JOB(INIT)      STATUS=(EXECUTING/SPL2),CLASS=STC,
$HASP890                PRIORITY=15,SYSAFF=(SPL2),HOLD=(NONE)
STC00005  $HASP890 JOB(VTAM)
$HASP890 JOB(VTAM)      STATUS=(EXECUTING/SPL2),CLASS=STC,
$HASP890                PRIORITY=15,SYSAFF=(SPL2),HOLD=(NONE)
STC00008  $HASP890 JOB(INIT)
$HASP890 JOB(INIT)      STATUS=(EXECUTING/SPLB),CLASS=STC,
$HASP890                PRIORITY=15,SYSAFF=(SPLB),HOLD=(NONE)
JOB00007  $HASP890 JOB(SPINLOOP)
$HASP890 JOB(SPINLOOP)  STATUS=(EXECUTING/SPL2),CLASS=A,
$HASP890                PRIORITY=9,SYSAFF=(SPL2),HOLD=(NONE)
JOB00010  $HASP890 JOB(SPINTWO)
$HASP890 JOB(SPINTWO)   STATUS=(EXECUTING/SPLB),CLASS=A,
$HASP890                PRIORITY=9,SYSAFF=(SPLB),HOLD=(NONE)
```

JES2 displays information for all STCs, TSUs, and batch jobs executing on all members of the MAS configuration.

9 `$da,all,x,dev,v=spool1`

```
STC00002  $HASP890 JOB(SYSLOG)
$HASP890 JOB(SYSLOG)    STATUS=(EXECUTING/SPL2),CLASS=STC,
```

```
$HASP890                PRIORITY=15,SYSAFF=(SPL2),HOLD=(NONE)
STC00004  $HASP890 JOB(INIT)
$HASP890 JOB(INIT)      STATUS=(EXECUTING/SPL2),CLASS=STC,
$HASP890                PRIORITY=15,SYSAFF=(SPL2),HOLD=(NONE)
```

Use this command to determine which jobs are active and have space on the SPOOL volume. The ALL parameter displays all jobs in the MAS; the X parameter displays all the types of jobs (JOBs, TSUs, and STCs) that are running; the DEV parameter displays all jobs on a device.

$D ACTIVATE - Display Current JES2 Checkpoint Set by $ACTIVATE

Function

Display's the current JES2 checkpoint level as set by the $ACTIVATE command and indicates if the checkpoint data set is large enough to hold the checkpoint.

Syntax

```
►►──$D──ACTIVATE──────────────────────────────────────────────────────────►◄
```

Authority Required

This command requires **display** authority. The description of the $T RDRnn command explains how to ensure the proper MVS system command group authority is assigned.

This command requires **read** security access authority. For a description of assigning command input authority, see *z/OS JES2 Initialization and Tuning Guide*.

Scope

MAS-Wide. The command is in effect across the entire MAS.

Messages

The $HASP895 displays the current level of active function.

Examples

1 `$d activate`

```
$HASP895 JES2 CHECKPOINT LEVEL IS NOW z/OS RELEASE 1.2
```

JES2 displays the current JES2 checkpoint level.

2 `$d activate`

```
$HASP895 JES2 CHECKPOINT LEVEL IS NOW OS/390 Release 4
$HASP895 A TOTAL OF 95 4K RECORDS ARE REQUIRED FOR $ACTIVATE
$HASP895 ALL INUSE=YES ARE AVAILABLE AND LARGE ENOUGH
$HASP895 $ACTIVATE WILL SUCCEED IF ISSUED FROM THIS MEMBER
```

JES2 displays the current checkpoint level and information which shows the $ACTIVATE command would be successful.

3 `$d activate`

```
$HASP895 JES2 CHECKPOINT LEVEL IS NOW OS/390 Release 4
$HASP895 A TOTAL OF 214 4K RECORDS ARE REQUIRED FOR $ACTIVATE
$HASP895 CKPT1 IS TOO SMALL BY 85 4K RECORDS
$HASP895 CKPT2 IS TOO SMALL BY 74 4K RECORDS
$HASP895 $ACTIVATE WILL FAIL IF ISSUED FROM THIS MEMBER
```

JES2 displays the current checkpoint level and information which shows the $ACTIVATE command would fail.

4 `$d activate`

```
$HASP895 JES2 CHECKPOINT LEVEL IS NOW OS/390 Release 4
$HASP895 A TOTAL OF 214 4K RECORDS ARE REQUIRED FOR $ACTIVATE
$HASP895 CKPT2 IS NOT ACCESSIBLE
$HASP895 $ACTIVATE WILL FAIL IF ISSUED FROM THIS MEMBER
```

JES2 displays the current checkpoint level and information which shows the $ACTIVATE command would fail.

$D ACTRMT - Display Active RJE Workstations in a MAS

Function

To display active RJE workstations in a multi-access spool (MAS) configuration.

This command has parameters you can use as a filtering technique to limit the type of information to search, or the amount of information to display. See “Using filtering to control and display information” on page 99 for additional information.

Syntax

```
►►──$D──ACTRMT──┬──────────────────────────────────────────────────────────────────────────────────────►
                │ nnnn──┬──────────────┬──┬──────────────────────────────────────────────────────────┬
                │       └──-──┬─nnnn─┬──┘  │ Selection limiting keywords │
                │             └─*────┘     │
                │ (──┬──────────────────────────────────────────────────────────────────────────────┬──)
                │    ▼ ,                                                                             │
                │    └──┬─nnnn─┬──┬──────────────┬──┬──────────────┬──┘
                │       └─*────┘  └──-──┬─nnnn─┬──┘  └──-──┬─nnnn─┬──┘
                │                       └─*────┘           └─*────┘
                └──────────────────────────────────────────────────────────────────────────────────────┘

►──┬──────────────────────────────────────────────────────────────────────────────────────────────────►◄
   │ Display limiting keywords │
   └───────────────────────────┘
```

Display limiting keywords:

```
├──┬──────────────┬──────────────────────────────────────────────────────────────────────────────────┤
   └──,MEMBER─────┘
```

Selection limiting keywords:

```
├──┬──────────────────────────────────────────────────────────────────────────────────────────────────┤
   └──,──┬──────┬──MEMBER──┬──────┬──┬──────────┬──┘
         └──/───┘          └──=───┘  └─memnum───┘
                           └──^=──┘  └─memname──┘
```

Parameters

nnnn
The subscript defining the active remote(s) that are affected by this command. The subscript can specify a specific numeric value or a range of values (1-32767) or an asterisk (*). For information about specifying a range for a subscript, see “Parameter Ranges”.

MEMBER[=memnum|memname]
Specifies the member number or member name of the MAS member, as specified on the MEMBER(nn) initialization statement, for which JES2 is to display active RJE workstations.

Authority Required

This command requires **display** authority. The description of the $T RDRnn command explains how to ensure the proper MVS system command group authority is assigned.

This command requires **read** security access authority. For a description of assigning command input authority, see *z/OS JES2 Initialization and Tuning Guide*.

Scope

MAS-Wide. This command displays information about the entire MAS.

Messages

The $HASP137 message displays all the active RJE workstations in the MAS. The RJE workstations displayed do not need to be defined by RMT(nnnn) initialization statements or $ADD RMT(nnnn) commands on the member where the command is entered.

Examples

1 `$d actrmt(3)`

```
$HASP137 ACTRMT(3)     MEMBER=IBM1
```

JES2 displays RJE workstation 3 as active on the IBM1 member.

2 `$d actrmt(*),member=nih1`

```
$HASP137 ACTRMT(4)     MEMBER=NIH1
$HASP137 ACTRMT(7)     MEMBER=NIH1
```

JES2 displays all the active RJE workstations on the NIH1 member.

3 `$d actrmt(*)`

```
$HASP137 ACTRMT(2)     MEMBER=PSU1
$HASP137 ACTRMT(3)     MEMBER=IBM1
$HASP137 ACTRMT(4)     MEMBER=NIH1
$HASP137 ACTRMT(5)     MEMBER=PSU1
$HASP137 ACTRMT(6)     MEMBER=PSU1
$HASP137 ACTRMT(7)     MEMBER=NIH1
```

JES2 displays all the active RJE workstations throughout the MAS.

$D APPL - Display JES2 SNA NJE Application(s)

Function

To display the current values of **all** parameters defined on the SNA NJE application(s).

Syntax

```
►►──$D──APPL──┬──────────────────────────────┬──┬──────────────────────────────┬──►
              │ 'xxxxxxxx'                   │  │ Selection limiting keywords  │
              │   ┌──────────────────────┐   │  └──────────────────────────────┘
              │   │                      ▼   │
              └──(──┬─xxxxxxxx─────────┬──)──┘
                    └─'xxxxxxxx'───────┘

►──┬──────────────────────────────┬──────────────────────────────────────────────►◄
   │ Display limiting keywords    │
   └──────────────────────────────┘
```

Display limiting keywords:

```
├──┬──────────┬──┬──────────┬──┬──────────┬──┬──────────┬──┬──────────┬──┬──────────┬──┤
   │ ,COMPACT │  │ ,LINE    │  │ ,LOGMODE │  │ ,LOGON   │  │ ,NODE    │  │ ,REST    │  │ ,STATUS  │
```

Selection limiting keywords:

```
├──┬──────────────────────────────────────────────────────────────────────────────────►
   │ ,──┬──┬──────────────────────────────────────────────────────────────────────────►
   │   │ /│ COMPACT──┬──┬──────────┬──compact──┬──┬──────────────────────────────────►
   │   └──┘          │ =│          │           │ │ ,──┬──┬──────────────────────────►
   │                 │ ^=│         │           │ │   │ /│ LINE──┬──┬──────────┬──line──┬──►
   │                 │ >│          │           │ │   └──┘       │ =│          │        │
   │                 │ <│          │           │ │              │ ^=│         │        │
   │                 └──┘          └───────────┘ │              │ >│          │        │
   │                                             │              │ <│          │        │
   │                                             │              └──┘          └────────┘
   │                                             └──────────────────────────────────────►
   │
   │ ►──┬──┬──────────────────────────────────────────────────────────────────────────►
   │   │ ,│ LOGMODE──┬──┬──────────┬──logmode──┬──┬──────────────────────────────────►
   │   │ /│          │ =│          │           │ │ ,──┬──┬──────────────────────────►
   │   └──┘          │ ^=│         │           │ │   │ /│ LOGON──┬──┬──────────┬──logon──┬──►
   │                 │ >│          │           │ │   └──┘        │ =│          │         │
   │                 │ <│          │           │ │               │ ^=│         │         │
   │                 └──┘          └───────────┘ │               │ >│          │         │
   │                                             │               │ <│          │         │
   │                                             │               └──┘          └─────────┘
   │                                             └──────────────────────────────────────►
   │
   │ ►──┬──┬──────────────────────────────────────────────────────────────────────────►
   │   │ ,│ NODE──┬──┬──────────┬──node──┬──┬──────────────────────────────────────────►
   │   └──┘        │ =│          │        │ │ ,──┬──┬──────────────────────────────►
   │               │ ^=│         │        │ │   │ /│ STATUS──┬──┬──────────┬──┬──────────┬──┤
   │               │ >│          │        │ │   └──┘         │ =│          │  │IN-SESSION│  │
   │               │ <│          │        │ │                │ ^=│         │  │NOT-IN-SESSION│
   │               └──┘          └────────┘ │                └──┘          │  │OPNDST-PENDING│
   │                                        └──────────────────────────────┘  │OPNSEC-PENDING│
   │                                                                          └──────────────┘
```

Parameters

COMPACT=compact

The compaction table number (0-99) that is used for outbound compaction in communicating with this application at the specified node. Zero denotes no compaction.

Default: The value for COMPACT specified on the NODE(nnnn) initialization statement that defines the node indicated by the NODE=nnnn parameter on this command.

LINE=line

A dedicated line used for the SNA NJE session associated with this application. Specify only when the application is inactive.

Default: 0 (No line is dedicated.)

LOGMODE=logmode
The 1 to 8 character name of the logon mode table entry that is used for this VTAM application. The parameter input must adhere to the VTAM naming conventions for a logon mode table entry name. A logon mode table entry determines which entry in the VTAM application logon mode table will be used. If the program participates as the secondary end of a session (SLU), the table entry provides a set of session parameters. This parameter is used only for NJE applications. If it is specified for non-NJE applications, the parameter is ignored. Specify only when the application is inactive.

Default: If you omit the parameter, the system uses the VTAM defaults.

LOGON=logon
Specifies the number (1-999) of the local LOGON DCT which should be used when specifying connections to the application.

NODE=node
The number (1-32767) or the 1 to 8 alphanumeric or special ($, #, or @) symbolic name (xxxxxxxx) of the node at which the JES2 application is defined to VTAM.

Note: The symbolic name must have been specified on the NAME= parameter of the NODE initialization statement for the referenced node, or must have been defined on the DESTID initialization statement.

REST
An integer (0-2000), which represents the resistance rating of the connection as viewed by the installation manager and coordinated with other installations. For information about selecting resistances, see *z/OS JES2 Initialization and Tuning Guide*.

Default: The value for REST specified on the NODE(nnnn) initialization statement that defines the node indicated by the NODE=nnnn parameter on this command.

STATUS
The status of current applications:

IN-SESSION
The application is currently in a session with another application.

NOT-IN-SESSION
The application is not currently in a session.

OPNDST-PENDING
The application is in the process of establishing a session with another application, a SNA OPNDST is expected.

OPNSEC-PENDING
The application is in the process of establishing a session with another application, a SNA OPNSEC is expected.

Authority Required

This command requires **display** authority. The description of the $T RDRnn command explains how to ensure the proper MVS system command group authority is assigned.

This command requires **read** security access authority. For a description of assigning command input authority, see *z/OS JES2 Initialization and Tuning Guide*.

Scope

Single Member. See *z/OS MVS System Commands* for more information on using the ROUTE *ALL command.

Messages

The $HASP821 message displays the current status of VTAM applications.

Example

```
1  $d appl(jes2)

$HASP821 APPL(JES2) NODE=2,COMPACT=0,LINE=0,LOGMODE=,
$HASP821            LOGON=0,REST=0
```

$D BUFDEF - Display JES2 Buffer Definitions

Function

To display the current values of **all** parameters defined on the BUFDEF initialization statement or command.

Syntax

```
►►──$D──BUFDEF──┬──────────────────────────────────────────────────────────►
                │
                └─,BELOWBUF──┬──────────────────────────────┬──┐
                             │          ┌──────────────┐    │  │
                             │          ▼              ,│    │  │
                             └─=(──┬──FREE──┬──────────┬─)─┘  │
                                   ├──LIMIT─┤          │      │
                                   └──WARN──┘          │      │
►──┬──────────────────────────────────────────────────────────────────────►◄
   │
   └─,EXTBUF──┬──────────────────────────────┬──┐
              │          ┌──────────────┐    │  │
              │          ▼              ,│    │  │
              └─=(──┬──FREE──┬──────────┬─)─┘  │
                    ├──LIMIT─┤          │      │
                    └──WARN──┘          │      │
```

Parameters

BELOWBUF=
The specifications for buffers that reside below 16 megabytes of virtual storage.

FREE The current number of free buffers.

LIMIT The maximum number (10-2000) of buffers that is allowed.

WARN
The percentage (0-100) of local buffers used at which the $HASP050 message alerts the operator of a shortage of local buffers. JES2 deletes this message from the console when the resource shortage is relieved (either by a decrease in resource use or an increase in the threshold).

EXTBUF=
The specifications for buffers that reside above 16 megabytes of virtual storage.

FREE The current number of free buffers.

LIMIT The maximum number (10-9999) of buffers that is allowed.

WARN
The percentage (0-100) of local buffers used at which the $HASP050 message alerts the operator of a shortage of local buffers. JES2 deletes this message from the console when the resource shortage is relieved (either by a decrease in resource use or an increase in the threshold).

Authority Required

This command requires **display** authority. The description of the $T RDRnn command explains how to ensure the proper MVS system command group authority is assigned.

This command requires **read** security access authority. For a description of assigning command input authority, see *z/OS JES2 Initialization and Tuning Guide*.

Scope

Single Member. The values supplied for this command will be in effect for this member only. There is no need to have this command issued to all members of the MAS.

Messages

The $HASPxxx messages display the current values for all the parameters on the BUFDEF statement.

Example

```
1  $d bufdef

$HASP840 BUFDEF  BELOWBUF=(LIMIT=1000,WARN=80,FREE=823),
$HASP840         EXTBUF=(LIMIT=1000,WARN=80,FREE=243)
```

JES2 displays the buffer definitions and current free counts.

$D CKPTDEF - Display the Checkpoint Definition

Function

Display the checkpoint definition.

This command has parameters you can use as a filtering technique to limit the type of information to search, or the amount of information to display. See “Using filtering to control and display information” on page 99 for additional information.

Syntax

```
►►──$D──CKPTDEF──┬──────────────────────────────────────────────────────────────────────────────────────────────►
                 │                                                                                              │
                 ├──,CKPT1──┬──────────────────────────────────────────────────────────────────────────────────┤
                 │          │                                                                                  │
                 │          │          ┌──────────────────────────────────────────────────────────────────────┐
                 │          │          ▼                                                                      
```

STRname
Displays the 1 to 16 character name of the structure if the primary data set resides on a coupling facility.

VOLATILE
Displays whether (YES) or not (NO) the specified checkpoint data set that resides on a coupling facility has entered the state where, if power to the coupling facility is lost, all data on the coupling facility is lost.

This parameter does not apply when a coupling facility structure becomes volatile during the checkpoint reconfiguration dialog.

VOLser
Displays the volume serial number on which the data set specified by the DSN= parameter resides.

Scope: MAS-Wide.

DUPLEX
Displays whether (ON) or not (OFF) this member of the multi-access spool configuration uses the duplexing function.

Scope: Single Member.

LOGSIZE
Displays the number of 4K storage blocks used for the change log portion of the checkpoint data set if the data set resides on DASD.

Scope: MAS-Wide.

MODE
Displays whether the multi-access spool configuration uses the data set defined by CKPT2 as the alternate primary checkpoint data set (DUAL) or as the backup to the CKPT1 data set (DUPLEX).

Scope: MAS-Wide.

NEWCKPTn
Displays an alternate data set that can replace the CKPTn data set if the CKPTn data set experiences a failure or becomes unavailable.

You can specify one or more of the following options:

DSName
Displays the 1 to 44 character name of the NEWCKPTn data set if the data set resides on DASD.

STRname
Displays the 1 to 16-character structure name of the NEWCKPTn data set if the data set resides on a coupling facility.

Note: If a checkpoint data set resides on a coupling facility structure and you attempt to display either the DSNAME= or the VOLSER= parameters, JES2 returns a null value (). When the checkpoint resides on DASD and you attempt to display STRNAME=, JES2 returns the same null value.

VOLser
The volume serial number on which the data set specified by DSName resides.

Scope: MAS-Wide.

OPVERIFY
Displays whether (Yes) or not (No) JES2 prompts the operator during a JES2-initiated I/O error checkpoint reconfiguration to verify or alter the default reconfiguration action. OPVERIFY has no meaning for a checkpoint reconfiguration entered for any other reasons.

Scope: MAS-Wide.

RECONFIG
Displays whether (Yes) or not (No) JES2 enters the checkpoint reconfiguration dialog so that you can supply the information needed to reconfigure the checkpoint data set specifications.

Scope: MAS-Wide.

VERSIONS
Displays the status of the checkpoint versioning parameter.

You can specify one or more of the following options:

MAXFAIL
Displays the greatest number of checkpoint version failures between successful updates since the last $T CKPTDEF,NUMBER= command was entered.

MAXUSED
Displays the greatest number of versions of the checkpoint data set that have been in use since the last IPL of JES2.

NUMBER
Displays the maximum number (2-50) of versions of the checkpoint data set that JES2 maintains.

NUMFAIL
Displays the number of failures since the last $T CKPTDEF,NUMBER= was entered.

STATUS
Displays whether checkpointing is active or inactive on the member.

VERSFREE
Displays the number of checkpoint versions available for updating.

WARN
Displays the percent (0-100) usage threshold of versions of the checkpoint data set.

Scope: Single Member.

VOLATILE
Displays how JES2 responds when a coupling facility enters the state where, if power to the coupling facility is lost, the data on the coupling facility is lost.

ALLCKPT
Displays the action taken if the coupling facilities on which all available checkpoint data sets reside (INUSE=YES) become volatile (unstable).

JES2 either issues a WTOR (WTOR), enters the checkpoint reconfiguration dialog (DIALOG), or ignores the change to volatile status (IGNORE).

ONECKPT
Displays the action taken if the coupling facility on which a checkpoint data set resides becomes volatile (unstable).

JES2 either issues a WTOR (WTOR), enters the checkpoint reconfiguration dialog (DIALOG), or ignores the change to volatile status (IGNORE).

Scope: Single Member.

Authority Required

This command requires **display** authority. The description of the $T RDRnn command explains how to ensure the proper MVS system command group authority is assigned.

This command requires **read** security access authority. For a description of assigning command input authority, see *z/OS JES2 Initialization and Tuning Guide*.

Scope

The scope of this command varies by parameter. See the description of each parameter for its scope.

Some parameters on this command will display information about the entire MAS, while other parameters will display information about this member only.

You might want to use the parameters for this command to get information about all members of the MAS. If so, you can use the MVS ROUTE *ALL command to issue this command to all active members (if the JES2 command character is the same on all members). See *z/OS MVS System Commands* for more information on using the ROUTE *ALL command.

Messages

The $HASP829 message displays the current values of all the parameters on the CKPTDEF initialization statement.

Examples

1
```
$d ckptdef
$HASP829 CKPTDEF  CKPT1=(DSNAME=SYS1.JESCKPT1,VOLSER=DATA1,
$HASP829          INUSE=YES,VOLATILE=NO),
$HASP829          CKPT2=(DSNAME=SYS1.JESCKPT2,VOLSER=DATA1,
$HASP829          INUSE=YES,VOLATILE=NO),
$HASP829          NEWCKPT1=(DSNAME=SYS2.JESCKPT1,VOLSER=DATA2),
$HASP829          NEWCKPT2=(DSNAME=SYS2.JESCKPT2,VOLSER=DATA2),
$HASP829          MODE=DUAL,DUPLEX=ON,LOGSIZE=4,
$HASP829          VERSIONS=(STATUS=INACTIVE,NUMBER=2,WARN=80,
$HASP829          MAXFAIL=0,NUMFAIL=0,VERSFREE=2,MAXUSED=0),
$HASP829          RECONFIG=NO,VOLATILE=(ONECKPT=WTOR,
$HASP829          ALLCKPT=WTOR),OPVERIFY=YES
```

The $HASP829 message displays two checkpoint data sets (‘SYS1.JESCKPT1’ and ‘SYS1.JESCKPT2’) that reside on DASD volumes, and the current status of these data sets.

2
```
$d ckptdef
$HASP829 CKPTDEF  CKPT1=(STRNAME=J2WRKCKPT1,INUSE=YES,VOLATILE=NO)
```

The $HASP829 message displays the CKPT1 value when the checkpoint data set resides on a coupling facility structure. Note that the $HASP829 message displays a STRNAME= value, but no DSNAME= or VOLSER= values.

$D CKPTSPACE - Display Checkpoint Spaces

Function

To display information about the amount of space in the checkpoint.

Syntax

```
►►──$D──CKPTSPACe──┬──────────────┬──┬──────────┬──┬──────────┬──┬──────────────────────────────────►
                   └─,BERTFREE────┘  └─,BERTNUM─┘  └─,BERTWARN─┘  └─,CKPT1=──┬─CAPACITY─┬──┘
                                                                             └─UNUSED───┘

►──┬──────────────────────────────────┬──────────────────────────────────────────────────────────►◄
   └─,CKPT2=──┬─CAPACITY─┬──┘
              └─UNUSED───┘
```

Parameters

BERTFREE
The current number of free BERT entries.

BERTNUM
The number of BERT (Block Extent Reuse Table) entries defined in the checkpoint.

BERTWARN
The threshold of BERT utilization at which the $HASP050 message should be issued.

CKPT1=(CAPACITY|UNUSED)
Displays information about the number of 4K records in the checkpoint data set.

CAPACITY
The maximum capacity of the CKPT1 data set in 4K records.

UNUSED
The number of 4K records that are unused by the CKPT1 data set.

CKPT2=(CAPACITY|UNUSED)
Displays information about the number of 4K records in the checkpoint data set.

CAPACITY
The maximum capacity of the CKPT2 data set in 4K records.

UNUSED
The number of 4K records that are unused by the CKPT2 data set.

Authority Required

This command requires **display** authority.

This command requires **read** security access auth ority. For a description of assigning command input authority, see *z/OS JES2 Initialization and Tuning Guide*.

Scope

MAS-Wide. This command displays information about the entire MAS.

Messages

The $HASP852 message displays the current values of all the parameters on the CKPTSPACE initialization statement.

Example

1 `$d ckptspace`

```
$HASP852 CKPTSPACE  BERTNUM=6000,BERTFREE=5914,BERTWARN=80,
$HASP852            CKPT1=(CAPACITY=168,UNUSED=5),
$HASP852            CKPT2=(CAPACITY=168,UNUSED=5)
```

$D COMPACT - Display JES2 Compaction Tables

Function

To display the JES2 compaction tables.

Syntax

```
►►──$D──COMPACT──┬──────────────────────────────────┬──────────────────►
                 └┤ Selection limiting keywords ├┘

►──┬──────────────────────────────────┬──────────────────────────────►◄
   └┤ Display limiting keywords ├┘
```

Display limiting keywords:

```
├──┬──────────┬──┬──────────┬──┬──────────┬──────────────────────────┤
   └─,CHARS───┘  └─,NAME────┘  └─,NUMBER───┘
```

Selection limiting keywords:

```
├──┬──────────────────────────────┬──┬──────────────────────────────┬──────────────────────────┤
   └─,──┬─────┬──NAME──┬─=──┬──name──┘  └─,──┬─────┬──NUMBER──┬─=──┬──number──┘
        └─/───┘        ├─^=─┤                └─/───┘          ├─^=─┤
                       ├─>──┤                                 ├─>──┤
                       └─<──┘                                 └─<──┘
```

Parameters

CHARS
Specifies the characters defined in the compaction table (dd,m1,m2,...mn,x1,x2,...xn).

dd A decimal number specifying the number of master characters.

m1,...mn
The master characters compacted by this compaction table. There will be dd of these master characters listed.

x1,...xn
Non-master characters which are not compacted.

COMPACT
Displays JES2 compaction tables.

NAME=name
The 1 to 8 character table name which can be used in JCL to reference this compaction table.

NUMBER=number
The number (1-99) assigned to this compaction table for reference by JES2.

Authority Required

This command requires **display** authority. The description of the $T RDRnn command explains how to ensure the proper MVS system command group authority is assigned.

This command requires **read** security access authority. For a description of assigning command input authority, see *z/OS JES2 Initialization and Tuning Guide*.

Scope

Single Member. The values supplied for this command will be in effect for this member only.

Messages

The $HASP468 message displays the compaction table.

Example

```
1  $d compact,name=dataset2

$HASP468 COMPACT  NAME=DATASET2,NUMBER=2,CHARS=(15,F0,F1,F2,F3,
$HASP468          F4,F5,F6,F7,F8,F9,C1,C5,C9,D6,E4,40,4D,5B,5D,
$HASP468          6B,C2,C3,C4,C6,C7,C8,D2,D3,D4,D5,D7)
```

JES2 displays the compaction table named DATASET2.

$D CONDEF - Display Console Communication Characteristics

Function

To display the console communication characteristics of JES2.

Syntax

```
►►──$D──CONDEF──┬──────────┬──┬──────────┬──┬──────────┬──┬──────────┬──┬──────────┬──┬──────────┬──►
                └,AUTOCMD──┘  └,BUFFREE──┘  └,BUFNUM──┘  └,BUFWARN──┘  └,CMDNUM──┘  └,CONCHAR──┘

►──┬──────────┬──┬──────────┬──┬──────────┬──┬──────────┬──┬──────────┬──┬──────────┬──────────────►◄
   └,DISPLEN──┘  └,DISPMAX──┘  └,MASMSG──┘  └,RDIRAREA──┘  └,RDRCHAR──┘  └,SCOPE──┘
```

Parameters

AUTOCMD
Specifies the number (2-9999) of automatic commands that can be active concurrently is JES2. The value should be large enough to permit operators to leave a JES2 dynamic display in each user defined (“out of line”) area of all graphic display consoles as well as one on each printer console controlled by MVS.

BUFFREE
Display the current number of free console message buffers in private storage.

BUFNUM
Displays the number of console message buffers to be provided for JES2 from private storage (above 16-megabytes in virtual storage). The value displayed for BUFNUM has been rounded up to the next page boundary to take advantage of available storage.

BUFWARN
Displays the percentage of console message buffers used at which the $HASP050 message alerts the operator of a shortage of console message buffers.

CMDNUM
Displays the maximum number of console message buffers to be allocated from common storage for JES2 command processing.

CONCHAR
A single character used to identify JES2 commands from local consoles.

One of the following characters will be displayed:

```
|    %    :    ¢    +    ¬    #    [    ]    !    &

-    @    .    $    /    ?    =    _    (    *    "
```

DISPLEN
Displays the length that is used for the displays and error message processing of:

- All initialization statements
- Those commands processed by $SCAN (most of those commands are the $D and $T commands for initialization statement parameters)
- The $DU command.

DISPMAX
Displays the maximum number of lines that JES2 displays for those requests

processed by the $SCAN facility. Those requests include initialization parameters and the $T and $D commands for initialization parameters.

MASMSG
Displays the maximum number of messages or commands that can be queued between any two members of a multi-access spool configuration.

RDIRAREA
Displays the default console out-of-line area which JES2 uses to direct display responses for commands subject to redirection. All redirectable commands which do not use either an L= or do not have redirection set up on the issuing console for that command have their responses directed to the RDIRAREA specification.

RDRCHAR
Displays the character used to identify all JES2 operator commands entered from a local or remote card reader.

One of the following characters will be displayed:

```
|   %   :   ¢   +   ¬   #   [   ]   !   &

-   @   .   $   /   ?   =   _   (   )   *   "
```

SCOPE
Specifies whether the command prefix specified on the CONCHAR parameter is recognized by this MVS system only, or by all MVS systems in the sysplex.

SCOPE=SYSTEM specifies that the prefix is recognized by this MVS system, but if the command was entered on a different MVS system, that system would not recognize or send the command to this system.

SCOPE=SYSPLEX specifies that the prefix is recognized as belonging to this system no matter which MVS system in the sysplex the command was entered on, and, if necessary, is routed to the correct MVS system for processing by this subsystem.

Authority Required

This command requires **display** authority. The description of the $T RDRnn command explains how to ensure the proper MVS system command group authority is assigned.

This command requires **control** security access authority. For a description of assigning command input authority, see *z/OS JES2 Initialization and Tuning Guide*.

Scope

Single Member. The response to this command will be a display of information about this member only. You might want to use this command to get information about all members in the MAS. To do so, you can use the MVS ROUTE *ALL command to issue this command to all active members (if the JES2 command character is the same on all members). See *z/OS MVS System Commands* for more information on using the ROUTE *ALL command.

Messages

The $HASP830 message displays the current values of all the parameters on the CONDEF statement.

Example

1 `$d condef`

```
$HASP830 CONDEF  AUTOCMD=20,CONCHAR=$,BUFNUM=10013,CMDNUM=100,
$HASP830         BUFFREE=10013,BUFWARN=80,MASMSG=200,RDIRAREA=Z,
$HASP830         RDRCHAR=$,SCOPE=SYSTEM,DISPLEN=64,DISPMAX=100
```

JES2 displays all the console communication characteristics. Note that the value displayed for BUFNUM has been rounded up to the next page boundary to take advantage of available storage.

$D CONNECT - Display Network Connections

Function

To display network connections that are defined to JES2. This command allows the display of connections defined by CONNECT initialization statements, $ADD commands or NCC records from other nodes.

Note: You can redirect these displays to a networking console.

This command has parameters you can use as a filtering technique to limit the type of information to search, or the amount of information to display. See “Using filtering to control and display information” on page 99 for additional information.

One or more parameters on this command accepts wildcards. Parameter descriptions will note that.

Syntax

```
►►──$D──CONNect──┬──────────────
```

```
►──┬──────────────
```

installations. You can specify wildcards on this parameter. See “Using Wildcards” on page 93 for additional information.

For information about resistances, see *z/OS JES2 Initialization and Tuning Guide*.

STATIC[=No|Yes]
Displays whether (YES) or not (NO) the connection is static.

STATUS[=ACTIVE|HELD|INACTIVE]
Displays the status of the connection. The following are valid types of status:

ACTIVE
JES2 displays only active connections, which include the following (in addition to ACTIVE without qualification):

ACTIVE(HELD) is displayed when a static connection exists but the underlying connection is in the process of signing on.

ACTIVE(INACTIVE) is displayed when a static connection exists but the underlying connection is inactive.

INACTIVE
JES2 displays only inactive connections.

HELD JES2 only displays connections in the process of signing on.

STATE[=EXTRA|INUSE|PENDING|RESTMAX| UNCONNECTED]
This parameter further describes the state of an active connection. It is only displayed when STATUS=ACTIVE.

The keyword values and their meanings are:

EXTRA
Connection is currently not a part of any path and is not needed to reach any node.

INUSE
Connection is currently in use in some path to a node.

PENDING
An INUSE STATIC connection to an adjacent node for which the corresponding line is not currently signed on.

RESTMAX
Connection is not in use because all paths that can make use of it have reached their resistance limit (as specified on NJEDEF RESTMAX).

UNCONNECTED
Static connection between two nodes, neither of which are reachable by any path.

TIME
Displays the time JES2 received the connection record for a connection or the time the operator issued a command that changed a static connection.

Authority Required

This command requires **display** authority. The description of the $T RDRnn command explains how to ensure the proper MVS system command group authority is assigned.

This command requires **read** security access authority. For a description of assigning command input authority, see *z/OS JES2 Initialization and Tuning Guide*.

Scope

Single Member. The response to this command will be a display of information about this member only. You might want to use this command to get information about all members in the MAS. To do so, you can use the MVS ROUTE *ALL command to issue this command to all active members (if the JES2 command character is the same on all members). See *z/OS MVS System Commands* for more information on using the ROUTE *ALL command.

Messages

The $HASP815 message is issued in response to this command.

Examples

An operator is able to display all existing connections between a set of nodes in the network. For example,

1 `$D CONNECT,NODEA=PHOENIX,NODEB=TUCSON`

The above example displays all existing connections between members of the node PHOENIX and the node TUCSON.

Characters such as an * can also be used. For example,

2 `$D CONNECT,NODEA=POK*,NODEB=PHOENIX,MEMBB=2`

This example displays all direct connections between nodes that begin with POK, and member 2 of the PHOENIX node.

3 `$D CONNECT,NODEA=PHOENIX,MEMBA=2`

The above example displays all direct connections into member 2 of the PHOENIX node.

$D DESTDEF - Display Symbolic Destination Settings

Function

To display the meaning and context of explicit and symbolic destinations on the DESTID statement.

Syntax

```
►►──$D──DESTDEF──┬──────────────┬──┬──────────┬──┬──────────────┬──┬──────────┬──►
                 └─,LOCALNUM────┘  └─,Ndest───┘  └─,NODENAME────┘  └─,Rdest───┘

►──┬──────────┬──┬──────────┬──┬──────────┬──┬──────────┬──►◄
   └─,RMdest──┘  └─,RMTdest─┘  └─,SHOWUSER─┘  └─,Udest───┘
```

Parameters

LOCALNUM
Displays the maximum special local routing allowed on this system.

Ndest
Displays how JES2 interprets destinations of the form ‘Nnnnn’. JES2 either interprets ‘Nnnnn’ and ‘NnnnnRmmmm’ as a node (NODE) or as a userid (USER).

NODENAME
Displays the nodename.

Rdest
Displays how JES2 interprets destinations of the form ‘Rmmmm’ and ‘NnnnnRmmmm’. JES2 either interprets ‘Rmmmm’ as a remote work station (REMOTE) or as a userid (USER).

RMdest
Displays how JES2 interprets destinations of the form ‘RMmmmm’. JES2 either interprets ‘RMmmmm’ as a remote work station (REMOTE) or as a userid (USER).

RMTdest
Displays how JES2 interprets destinations of the form ‘RMTmmmm’. JES2 either interprets ‘RMTmmmm’ as a remote work station (REMOTE) or as a userid (USER).

SHOWUSER
Displays whether destinations for the local node that have user routings are displayed with a ‘LOCAL.’ prefix (WITHLOCAL) or not (NOLOCAL).

Udest
Displays how JES2 interprets destinations of the form ‘Unnnn’. JES2 either interprets ‘Unnnn’ as a special local route code (SPLOCAL) or as a userid (USER).

Authority Required

This command requires **display** authority. The description of the $T RDRnn command explains how to ensure the proper MVS system command group authority is assigned.

This command requires **read** security access authority. For a description of assigning command input authority, see *z/OS JES2 Initialization and Tuning Guide*.

Scope

The scope of this command varies by parameter.

The values supplied for the LOCALNUM and SHOWUSER parameters will display information about this member only. Depending on your installation's setup, however, you might want to use these parameters to get information about all members of the MAS. If so, you can use the MVS ROUTE *ALL command to issue this command to all active members (if the JES2 command character is the same on all members).

The values supplied for all other parameters are MAS-wide and will display information about the entire MAS.

See *z/OS MVS System Commands* for more information on using the ROUTE *ALL command.

Messages

The $HASP812 message displays the current status of DESTDEF parameters in the installation.

Example

1 `$d destdef`

```
$HASP812 DESTDEF  LOCALNUM=9999,NDEST=USER,RDEST=USER,RMDEST=
$HASP812          REMOTE,RMTDEST=REMOTE,UDEST=USER,SHOWUSER=
$HASP812          WITHLOCAL
```

JES2 displays an installation where destids prefixed by 'N', 'U', and 'R' can be userids. JES2 processes destids prefixed by either 'RM' or 'RMT' as remote work stations and displays the 'LOCAL.' prefix for all route codes.

$D DEStid - Display a JES2 Symbolic Destination

Function

To display the JES2 route code associated with the specified symbolic destination name.

This command has parameters you can use as a filtering technique to limit the type of information to search, or the amount of information to display. See “Using filtering to control and display information” on page 99 for additional information.

One or more parameters on this command accepts wildcards. Parameter descriptions will note that.

Syntax

```
►►──$D──DEStid──┬──────────────────────────────┬──┬──────────────────────────────────────────────┬──►
                │─'xxxxxxxx'──────────────────│  │─┤ Selection limiting keywords ├─┘
                │      ┌──,──────────────────┐│
                │──(───▼──┬─xxxxxxxx──────┬──┴──)──┘
                │         └─'xxxxxxxx'────┘
                │

►──┬──────────────────────────────┬──────────────────────────────────────────────────────────►◄
   │─┤ Display limiting keywords ├─┘
```

Display limiting keywords:

```
├──┬──────────┬──┬──────────┬──┬──────────┬──────────────────────────────────────────────────┤
   │─,DEST────│  │─,PRIMARY─│  │─,STATUS──│
```

Selection limiting keywords:

```
├──┬──────────────────────────────────────────────────────────────────────────────────────────►
   │─,──┬──────┬──PRIMARY──┬──────┬──┬──────┬──┬──────┬──┬──────────────────────────────────┤
      │─/──│      │─=────│  │─No───│
      │    │      │─^=───│  │─Yes──│
      │    │      │      │  │      │
      │    │      │      │  │      │
      │    │      │      │  │      │
```

STATUS[=DESTID|NODENAME|NODENAME+DESTID]
Displays whether this is a node (or NJE node name) or a destid. The status displayed will be one of the following values:
- STATUS=NODENAME+DESTID
- STATUS=NODENAME
- STATUS=DESTID

Authority Required

This command requires **display** authority. The description of the $T RDRnn command explains how to ensure that the proper MVS system command group authority is assigned.

This command requires **read** security access authority. For a description of assigning command input authority, see *z/OS JES2 Initialization and Tuning Guide*.

Scope

Single Member. The response to this command will be a display of information about this member only. You might want to use this command to get information about all members in the MAS. To do so, you can use the MVS ROUTE *ALL command to issue this command to all active members (if the JES2 command character is the same on all members). See *z/OS MVS System Commands* for more information on using the ROUTE *ALL command.

Messages

The $HASP822 message displays the current values of all the parameters on the DEStid initialization statement.

Examples

1 `$D DESTID(*)`

```
$HASP822 DESTID(POK)       DEST=N1,STATUS=NODENAME+DESTID,
$HASP822                   PRIMARY=NO
      $HASP822 DESTID(REMOTE20)  DEST=R20,STATUS=DESTID,PRIMARY=NO
      $HASP822 DESTID(REMOTE21)  DEST=R21,STATUS=DESTID,PRIMARY=NO
      $HASP822 DESTID(REMOTE22)  DEST=R22,STATUS=DESTID,PRIMARY=NO
      $HASP822 DESTID(REMOTE23)  DEST=R23,STATUS=DESTID,PRIMARY=NO
      $HASP822 DESTID(REMOTE24)  DEST=R24,STATUS=DESTID,PRIMARY=NO
      $HASP822 DESTID(REMOTE25)  DEST=R25,STATUS=DESTID,PRIMARY=NO
      $HASP822 DESTID(REMOTE26)  DEST=R26,STATUS=DESTID,PRIMARY=NO
      $HASP822 DESTID(REMOTE27)  DEST=R27,STATUS=DESTID,PRIMARY=NO
      $HASP822 DESTID(REMOTE34)  DEST=R34,STATUS=DESTID,PRIMARY=NO
      $HASP822 DESTID(REMOTE5)   DEST=R5,STATUS=DESTID,PRIMARY=NO
      $HASP822 DESTID(SANJOSE)
$HASP822 DESTID(SANJOSE)   DEST=N3,STATUS=NODENAME+DESTID,
$HASP822                   PRIMARY=NO
         $HASP822 DESTID(WSC)
$HASP822 DESTID(WSC)       DEST=N2,STATUS=NODENAME+DESTID,
$HASP822                   PRIMARY=NO
```

JES2 displays all destids.

2 `$D DESTID(*), STATUS=NODENAME+DESTID`

```
         $HASP822 DESTID(NODE4)
$HASP822 DESTID(NODE4)     DEST=N4,STATUS=NODENAME+DESTID,
$HASP822                   PRIMARY=NO
         $HASP822 DESTID(POK)
$HASP822 DESTID(POK)       DEST=N1,STATUS=NODENAME+DESTID,
$HASP822                   PRIMARY=NO
         $HASP822 DESTID(SANJOSE)
```

```
$HASP822 DESTID(SANJOSE)   DEST=N3,STATUS=NODENAME+DESTID,
$HASP822                   PRIMARY=NO
         $HASP822 DESTID(WSC)
$HASP822 DESTID(WSC)       DEST=N2,STATUS=NODENAME+DESTID,
$HASP822                   PRIMARY=NO
```

JES2 displays all destids that have a status of nodename and destid.

```
3a   $D DESTID(FAXROOM)

$HASP822 DESTID(FAXROOM)   DEST=U3,STATUS=DESTID,PRIMARY=YES

3b   $D DESTID(PRINTER3)
$HASP822 DESTID(PRINTER3)  DEST=U3,STATUS=DESTID,PRIMARY=NO

3c   $TOJ7,ALL,D=U3

JOB00007  $HASP686 OUTPUT(DIA)
$HASP686 OUTPUT(DIA)       OUTGRP=1.1.1,BURST=NO,FCB=****,
$HASP686                   FLASH=****,FORMS=DXP,HOLD=(NONE),
$HASP686                   HOLDRC=,OUTDISP=LEAVE,PAGES=,
$HASP686                   PRIORITY=12,PRMODE=LINE,QUEUE=1,
$HASP686                   RECORDS=(37 OF 37),ROUTECDE=FAXROOM,
$HASP686                   SECLABEL=,TSOAVAIL=NO,UCS=****,
$HASP686                   USERID=PIKE,WRITER=
```

The series of examples above shows that multiple names (aliases) may exist for a destination. The PRIMARY parameter indicates what the alias is to be resolved to when the DEST of a job or SYSOUT is U3.

For example, if SYSOUT is routed to U3, as in the last example of the series, any displays of this output display FAXROOM.

$D ESTBYTE - Display Number of Bytes Set for Jobs and their Output

Function

To display the estimated number of bytes set for jobs and their output.

Syntax

```
►►──$D──ESTBYTE──┬──────┬──┬──────┬──┬──────┬──────────────────────────────►◄
                 └,INT──┘  └,NUM──┘  └,OPT──┘
```

Parameters

INT
Displays the estimated interval, in thousands of bytes of spool space, for jobs and their output.

NUM
Displays the estimated number, in thousands of bytes of spool space, for jobs and their output.

OPT
Displays the action (0, 1, or 2) JES2 takes when a job exceeds the estimated spool utilization:

0 job is allowed to continue execution

1 job is cancelled without a dump

2 job is cancelled with a dump

Authority Required

This command requires **display** authority. The description of the $T RDRnn command explains how to ensure that the proper MVS system command group authority is assigned.

This command requires **read** security access authority. For a description of assigning command input authority, see *z/OS JES2 Initialization and Tuning Guide*.

Scope

Single Member. The response to this command will be a display of information about this member only.

Messages

The $HASP845 message displays the keywords defined and their current values.

Example

```
1  $d estbyte
 $HASP845 ESTBYTE  NUM=99999,INT=99999,OPT=0
```

$D ESTLNCT - Display Number of Lines for Jobs and their Output

Function

To display the estimated number of lines for jobs and their output.

Syntax

```
►►──$D──ESTLNCT──┬──────┬──┬─────┬──┬──────┬──────────────────────────────────►◄
                 └,INT──┘  └,NUM──┘  └,OPT──┘
```

Parameters

INT
Displays the estimated lines for jobs and their output.

NUM
Displays the estimated number, for jobs and their output.

OPT
Displays the action (0, 1, or 2) JES2 takes when a job exceeds the estimated spool utilization:

0 job is allowed to continue execution

1 job is cancelled without a dump

2 job is cancelled with a dump

Authority Required

This command requires **display** authority. The description of the $T RDRnn command explains how to ensure that the proper MVS system command group authority is assigned.

This command requires **read** security access authority. For a description of assigning command input authority, see *z/OS JES2 Initialization and Tuning Guide*.

Scope

Single Member. The response to this command will be a display of information about this member only.

Messages

The $HASP845 message displays the keywords defined and their current values.

Example

```
1  $d estlnct
 $HASP845 ESTLNCT  NUM=4,INT=4000,OPT=0
```

$D ESTPAGE - Display Number of Pages Set for Jobs and their Output

Function

To display the estimated number of pages set for jobs and their output.

Syntax

```
►►──$D──ESTPAGE──┬──────┬──┬─────┬──┬─────┬──────────────────────────────────►◄
                 └,INT──┘  └,NUM──┘  └,OPT──┘
```

Parameters

ESTPAGE
The $HASP845 message displays the current processing estimates set for jobs and their output.

INT
Displays the interval, in number of pages, for jobs and their output.

NUM
Displays the estimated number of pages for jobs and their output.

OPT
Displays the action (0, 1, or 2) JES2 takes when a job exceeds the estimated spool utilization:

0 job is allowed to continue execution

1 job is cancelled without a dump

2 job is cancelled with a dump

Authority Required

This command requires **display** authority. The description of the $T RDRnn command explains how to ensure that the proper MVS system command group authority is assigned.

This command requires **read** security access authority. For a description of assigning command input authority, see *z/OS JES2 Initialization and Tuning Guide*.

Scope

Single Member. The response to this command will be a display of information about this member only.

Messages

The $HASP845 message displays the keywords defined and their current values.

Example

1 `$d estpage`

```
$HASP845 ESTPAGE  NUM=40,INT=10,OPT=0
```

$D ESTPUN - Display Number of Punch Pages Set for Jobs and their Output

Function

To display the estimated number of punch pages set for jobs and their output.

Syntax

```
►►──$D──ESTPUN──┬──────┬──┬──────┬──┬──────┬──────────────────────────────►◄
                └─,INT─┘  └─,NUM─┘  └─,OPT─┘
```

Parameters

ESTPUN
The $HASP845 message displays the current processing estimates set for jobs and their output.

INT
Displays the interval, in cards, for jobs and their output.

NUM
Displays the estimated punch card output for jobs and their output.

OPT
Displays the action (0, 1, or 2) JES2 takes when a job exceeds the estimated spool utilization:

0 job is allowed to continue execution

1 job is cancelled without a dump

2 job is cancelled with a dump

Authority Required

This command requires **display** authority. The description of the $T RDRnn command explains how to ensure that the proper MVS system command group authority is assigned.

This command requires **read** security access authority. For a description of assigning command input authority, see *z/OS JES2 Initialization and Tuning Guide*.

Scope

Single Member. The response to this command will be a display of information about this member only.

Messages

The $HASP845 message displays the keywords defined and their current values.

Example

1 `$d estpun`

```
$HASP845 ESTPUN   NUM=100,INT=2000,OPT=0
```

$D ESTIME - Display Amount of Time Set for Jobs and their Output

Function

To display the estimated amount of time set for jobs.

Syntax

```
►►──$D──ESTIME──┬──────┬──┬──────┬──┬──────┬──────────────────────────────────►◄
                └─,INT─┘  └─,NUM─┘  └─,OPT─┘
```

Parameters

ESTIME
The $HASP845 message displays the current processing estimates set for jobs and their output.

INT
Displays the interval, in minutes, for jobs and their output.

NUM
Displays the default estimated time execution for jobs and their output.

OPT
Displays the action (Yes or No) JES2 takes when a job exceeds the estimated spool utilization:

Yes
Specifies that the $HASP308 message is issued.

No
Specifies that the $HASP308 message is not issued.

Authority Required

This command requires **display** authority. The description of the $T RDRnn command explains how to ensure that the proper MVS system command group authority is assigned.

This command requires **read** security access authority. For a description of assigning command input authority, see *z/OS JES2 Initialization and Tuning Guide*.

Scope

Single Member. The response to this command will be a display of information about this member only.

Example

1 `$d estime`

```
$HASP845 ESTIME   NUM=40,INT=10,OPT=Yes
```

$D EXIT - Display Current Characteristics of Specified JES2 Exit Points

Function

To display the characteristics of JES2 exit points.

Syntax

```
►►──$D──EXIT──┬─nnn──┬──────────┬──┬──────────────────────────────────┬──┬──────────────────────────────────┬──►
              │      └─-──┬─nnn─┬┘  │                                  │  │                                  │
              │           └─*───┘   │                                  │  │                                  │
              │                     │                                  │  │                                  │
              │   ┌──────────────────┐                                │  │                                  │
              │   ▼                  │                                │  │                                  │
              └──(──┬─nnn─┬──┬──────┬──┬─nnn─┬──┬──────┬──)──────────┘  │                                  │
                    └─*───┘  └─-──┬─nnn─┬┘  └─*───┘  └─-──┬─nnn─┬┘      │                                  │
                                  └─*───┘                 └─*───┘       │                                  │
                                                                        │                                  │
                                                                        └─┤ Selection limiting keywords ├┘

►──┬──────────────────────────────────────────────────────────────────────────────────────────────────────►◄
   └─┤ Display limiting keywords ├┘
```

Display limiting keywords:

```
├──┬──────────────┬──┬──────────────┬──┬──────────────┬──┬──────────────┬──┬──────────────┬──┤
   └─,ENViron─────┘  └─,ROUtines────┘  └─,SPLEVEL─────┘  └─,STATUS──────┘  └─,TRace───────┘  └─,USECOUNT──┘
```

Selection limiting keywords:

```
├──┬──────────────────────────────────────────────────────────────────────────────────────────────────────►
   │ ┌──────────────────────────────────────────────────────────────────────────────────────────────────┐
   └─┼─,──┬──────┬──ENViron──┬──────┬──┬──FSS──────────────────────────────────────────────────────────┤
     │    └─/────┘           └─=────┘  ├─JES2─────────────────────────────────────────────────────────┤
     │                                 ├─MIXED────────────────────────────────────────────────────────┤
     │                                 ├─SUBTASK──────────────────────────────────────────────────────┤
     │                                 └─USER─────────────────────────────────────────────────────────┘
     │ ┌──────────────────────────────────────────────────────────────────────────────────────────────┐
     └─┼─,──┬──────┬──SPLEVEL──┬──────┬──┬──CHECK────────────────────────────────────────────────────┤
       │    └─/────┘           └─=────┘  └─NOCHECK──────────────────────────────────────────────────┘

►──┬──────────────────────────────────────────────────────────────────────────────────────────────────────┤
   │ ┌──────────────────────────────────────────────────────────────────────────────────────────────────┐
   └─┼─,──┬──────┬──STATUS──┬──────┬──┬──DISABLED─────────────────────────────────────────────────────┤
     │    └─/────┘           └─=────┘  ├─DISABLED/ENTERED──────────────────────────────────────────────┤
     │                                 └─ENABLED──────────────────────────────────────────────────────┘
     │ ┌──────────────────────────────────────────────────────────────────────────────────────────────┐
     └─┼─,──┬──────┬──TRace───┬──────┬──┬──No───────────────────────────────────────────────────────┤
       │    └─/────┘           └─=────┘  └─Yes──────────────────────────────────────────────────────┘
```

Parameters

EXIT(nnn|*)

The $HASP823 message displays the current characteristics of the specified JES2 exit points.

ENViron[=FSS|JES2|MIXED|SUBTASK|USER]

Displays the environment in which the exit gains control. You can specify the ENVIRON parameter without an environment keyword, or you can specify an environment if you are requesting information about all modules in that environment only (for example, ENV=USER).

Valid keyword values for the D MODULE ENV= parameter and their meanings are:

Value	Meaning
FSS	Display only those exits that are entered in the FSS address space environment.

JES2 Display only those exits that are entered in the JES2 address space main task environment.

MIXED
Display only those exits that are entered in the same environment. Having a module with routines defined for different environments is rare in IBM modules, and is not recommended in installation-defined modules.

SUBTASK
Display only those exits that are entered in the JES2 address space subtask environment.

USER Display only those exits that are entered in the multi-address-space user environment.

ROUtines
Display only those exits that are entered in the $ENTRY macros in a module. These routines are available for use via the EXIT(nnn) initialization statement.

Only routine names in installation-provided modules or in IBM-provided sample exit modules will be included.

SPLEVEL[=CHECK|NOCHECK]
Display only those exits that are entered in the SPLEVEL= parameter on the $MODULE macro. Optionally, you can display only those modules that have assigned a specific value to the $MODULE SPLEVEL= parameter by coding one of the following keywords:

Value Meaning

CHECK
Display only those modules that specified CHECK on the $MODULE SPLEVEL= parameter.

NOCHECK
Display only those modules that specified NOCHECK on the $MODULE SPLEVEL= parameter.

STATUS={DISABLED|DISABLED/ENTERED|ENABLED}
Display the current state of the exit in:

DISABLED
The exit is not to be entered.

DISABLED/ENTERED
The exit received control even though it is in a disabled state.

ENABLED
The exit is to be entered at the appropriate point in processing.

TRace[=No|Yes]
Specifies whether the execution of this exit is to be traced (Yes) or not (No).

USECOUNT
Displays a count of processes using the exit at this time.

Authority Required

This command requires **display** authority. The description of the $T RDRnn command explains how to ensure that the proper MVS system command group authority is assigned.

This command requires **read** security access authority. For a description of assigning command input authority, see *z/OS JES2 Initialization and Tuning Guide*.

Scope

Single Member. The command will be in effect for this member only. There is no need to have this command issued to all members of the MAS.

Messages

The $HASP823 messages displays the characteristics of JES2 exit points.

Examples

1 `$d exit(5)`

```
$HASP823 EXIT(5)     STATUS=ENABLED,ENVIRON=JES2,
$HASP823             ROUTINES=(OURCMD,QUEBRK),SPLEVEL=CHECK,
$HASP823             TRACE=YES,USECOUNT=0
```

JES2 displays the current status of $EXIT 5. The exit is enabled, and routines OURCMD and QUEBRK will get control whenever exit 5 is entered.

2 `$d exit(*),status=enabled,routines`

```
$HASP823 EXIT(5)     ROUTINES=(OURCMD,QUEBRK)
$HASP823 EXIT(24)    ROUTINES=(FIXMAP)
$HASP823 EXIT(26)    ROUTINES=(FREEMAP)
```

JES2 displays all enabled $EXITs, and the routines associated with each.

$D F - Display the Job Output Forms Queue

Function

To display the following information about data set groups queued(ready) for output. That is, output groups (displayable with $DOjob) with OUTDISP=WRITE or KEEP that are routed to the local node and are not busy:

- Route code
- Forms required
- Carriage required
- Train required
- Forms overlay frame, if required
- Bursting, if required
- Number of jobs queued for each output class
- Process mode

By default, if the job is held (as displayed by $Djob) then JES2 doesn't count the output group.

One or more parameters on this command accepts wildcards. Parameter descriptions will note that.

Syntax

```
►►──$D──F──,R=──┬──────────────────┬──Nnnnn-Nnnnn─Rmmmm-Rmmmm─Unnnn-Unnnn─NnnnnRmmmm-NnnnnRmmmm──────►
                │─LOCAL│ANYLOCAL─│
                │─Nnnnn│nodename─│
                │─destid──────────│
                │─NnnnnRmmmm──────│
                │─Ummmm───────────│
                │─node.remote─────│
                │─node.userid─────│
                │─node.destid─────│
                │─remote──────────│
                │─userid──────────│
                │─*───────────────│
                │─node.*──────────│
                │─node.*──────────│
                │─-───────────────│
                └─node.*──────────┘

►─,J=──┬──────────┬──,D=──┬──────┬──────────────────────────────────────────────────────────────►◄
       │─J│JOBn-n─│       │─H────│
       │─S│STCn-n─│       │─HELD─│
       └─T│TSUn-n─┘       │─A────│
                          └─ALL──┘
```

Parameters

F JES2 displays the number of data sets queued for output.

R=

Specifies a destination for a piece of output. Indicates that output sent to the specified destinations can be selected. The value for all routing numbers can range from 1 to 32767. You can also specify wildcards on this parameter. See "Route Codes" on page 92 for a description of how to specify route codes and "Using Wildcards" on page 93 for information on wildcards.

If this command originates from another node in the network and the R= operand does not specify a node (first-level destination), the receiving node defaults the first-level destination to the node where the command originated.

If this command is sent to another node in the network using the $N command, be aware that the receiving node will default the node (first-level destination) of the R= operand to the sending node. If another node is desired, specify a destination on the R= operand that will resolve to the desired node (first level destination) at the receiving node.

Note: NODENAME=REQUIRED on the DESTDEF initialization statement will cause JES2 to require that a userid be prefixed with a node name.

Valid specifications are:

LOCAL|ANYLOCAL
Indicates that only output for the local node is displayed.

Nnnnn|nodename
Indicates that output for jobs is displayed at the node(s) specified through the decimal node identifier or an EBCDIC nodename.

destid Indicates that only output for the node(s) represented by the destid is displayed.

NnnnnRmmmm|node.remote|node.userid
Indicates that output for jobs is displayed at remote Rmmmm at the node Nnnnn. Rmmmm can also be specified as RMmmmm or RMTmmmm.

Ummmm
Indicates that job output is displayed as special local routing. Wildcards are not supported.

node.destid
Indicates that output for a job is displayed at a destination at the specified node. The destid refers to both the node and the remote. The node specified in the destid must be the same as the node portion of the route code. If the number of the remote has been reassigned, you can use the destid to send to this node.

remote
Indicates job output display routing to a remote. Remote can be specified in any of the following ways:

LOCAL|ANYLOCAL
Indicates that output for the jobs is displayed at the local node.

Rmmmm
Indicates that output for the jobs is displayed at the specified remote.

destid Indicates that output for the jobs is displayed at a destid that refers to a remote.

userid Indicates routing to a valid TSO userid. If the userid ends in *, this route code refers to all userids beginning with the characters that precede the *, up to but not including the *.

For more information about specifying userids as remotes, refer to “Route Codes” on page 92.

***** Displays all output for the local node, including special local, userid, and a remote workstation on the local node.

node.*
Displays output for all userids at the local node.

node.*-node.*
Displays all output for each node in the range. The range may include the local node.

Nnnnn-Nnnnn
Displays all output for each node in the range. The range may include the local node.

Rmmmm-Rmmmm
Displays all output for each remote in the range.

Unnnn-Unnnn
Displays all output for each special local node in the range. Wildcards are not supported.

NnnnnRmmmm-NnnnnRmmmm
Displays a range of remotes at a node. Both node identifiers must be the same.

J=J|JOBn[-n]
The batch job or range of batch jobs for which job output information is displayed.

J=S|STCn[-n]
The started task or range of started tasks for which job output information is displayed.

J=T|TSUn[-n]
The time-sharing user or range of time-sharing users for whom job output information is displayed.

D=H|HELD|A|ALL
D=(A|ALL) tells JES2 to consider ready output groups even if the owning job is held. D=(H|HELD) tells JES2 to only count ready output groups belonging to held jobs. If you omit this parameter, JES2 displays job output information for all jobs.

Authority Required

This command requires **display** authority. The description of the $T RDRnn command explains how to ensure the proper MVS system command group authority is assigned.

This command requires **read** security access authority. For a description of assigning command input authority, see *z/OS JES2 Initialization and Tuning Guide*.

Scope

MAS-Wide. This command can display information about jobs on any or all members of the MAS depending on the parameters you provide.

Messages

The $HASP621 message displays the destination and processing requirements of the work on the output forms queue.

Example

1 `$df,r=local`

```
$HASP621 OUT R=LOCAL   F=STD   C=**** T=**** W= (NONE)
$HASP621  PRMODE=LINE  CLASS     A=3     B=1
```

JES2 displays job output information for released jobs that route their output to remote workstations off the local node.

$D FSS - Display the Characteristics of the Specified Functional Subsystems

Function

To display characteristics of function subsystems.

Syntax

```
►►─$D─┬─FSS────┬─┬─'acccccccc'──────────────┬─┬─┬─ Selection limiting keywords ─┬─►
      └─FSSDef─┘ │                          │ │ └──────────────────────────────┘
                 └─(──┬──acccccccc──┬──)────┘ │
                      │ ,           │         │
                      └─'acccccccc'─┘         │
►─┬─ Display limiting keywords ─┬──────────►◄
  └──────────────────────────┘
```

Display limiting keywords:

```
├─┬─,ASID─┬─┬─,AUTOstop─┬─┬─,FSSMADDR─┬─┬─,FSSMPTF─┬─┬─,FSSMLENG─┬─┬─,FSSMAPAR─┬─┬─,HASPFSSM─┬──►
  │       │ │           │ │           │ │           │ │           │ │           │ │           │
►─┬─,LONG─┬─┬─,PROC─┬──┤
  │       │ │       │
```

Selection limiting keywords:

```
├─┬─,─┬─/─┬─ASID─┬─=──────┬─asid─┬─┬─,─┬─/─┬─AUTOstop─┬─=──┬─┬─No──┬─┬──►
  │   │   │      │ ^=     │      │ │   │   │          │ ^= │ │Yes  │ │
  │   │   │      │ >      │      │ │   │   │          │    │ │     │ │
  │   │   │      │ <      │      │ │   │   │          │    │ │     │ │
►─┬─,─┬─/─┬─HASPFSSM─┬─=──────┬─haspfssm─┬─┬─,─┬─/─┬─PROC─┬─=──┬─proc─┬──┤
  │   │   │          │ ^=     │          │ │   │   │      │ ^= │      │
  │   │   │          │ >      │          │ │   │   │      │ >  │      │
  │   │   │          │ <      │          │ │   │   │      │ <  │      │
```

Parameters

ASID=asid
Displays the ASID of the address space in the functional subsystem.

AUTOstop={No|Yes}
Specifies whether (Yes) or not (No) the FSS address space is to be stopped (shut down) if all the devices attached to the FSS are drained.

FSSMADDR
Displays the hexadecimal address where the HASPFSSM module in use by this FSS has been loaded into storage (in the address space indicated by the ASID= parameter). This parameter is only displayed when the FSS is active and LONG is specified on the display command.

FSSMAPAR
Displays the last service applied to the HASPFSSM module in use by this FSS. This parameter is only displayed when the FSS is active and LONG is specified on the display command.

FSSMLENG
Displays the length of the HASPFSSM module in use by this FSS. This parameter is only displayed when the FSS is active and LONG is specified on the display command.

FSSMPTF
Displays the last PTF maintenance applied to the HASPFSSM module by this FSS. This parameter is only displayed when the FSS is active and LONG is specified on the display command.

HASPFSSM=haspfssm
The 1 to 8 character name of the load module that is loaded into the functional subsystem address space. This load module contains the various JES2-supplied FSI service routines.

LONG
Displays additional information.

PROC=proc
Specifies the 1 to 8 character name of the procedure in SYS1.PROCLIB that contains the JCL required to start the functional subsystem.

Authority Required

The scope of some commands varies by parameter.

Some parameters on certain commands will display information about the entire MAS, while other parameters will display information about this member only.

For those commands that are single member scope, or have some parameters that are single member scope, you might want to use the parameters for that command to get information about all members of the MAS. If so, you can use the MVS ROUTE *ALL command to issue that command to all active members (if the JES2 command character is the same on all members). See *z/OS MVS System Commands* for more information on using the ROUTE *ALL command.

Scope

Single Member. The response to this command will be a display of information about this member only.

Messages

The individual parameter descriptions list the resulting messages.

Example

```
1  $d fss(psf1)

$HASP824 FSS(PSF1)     PROC=WTR3800S,HASPFSSM=HASPFSSM,
$HASP824               AUTOSTOP=NO
```

The $HASP824 message displays the attributes of functional subsystem PSF1.

$D INITDEF - Display the Number of Logical Initiators Currently Defined

Function

To display the number of JES2 logical initiators.

Syntax

```
►►──$D──INITDEF──┬──────────┬──────────────────────────────────────────►◄
                 └─,PARTNUM─┘
```

Parameters

PARTNUM
The number of JES2 initiators on this member.

Authority Required

This command requires **display** authority. The description of the $T RDRnn command explains how to ensure that the proper MVS system command group authority is assigned.

This command requires **read** security access authority. For a description of assigning command input authority, see *z/OS JES2 Initialization and Tuning Guide*.

Scope

Single Member. This command will be in effect for his member only. There is no need to have this command issued to all members of the MAS.

Messages

The $HASP468 message displays the number of JES2 logical initiators currently defined.

Example

```
1  $d initdef
 $HASP468 INITDEF PARTNUM=10
```

JES2 indicates that there are 10 JES-managed initiators on this member.

$D I[nnmm] - Display Initiator Information

Function

To display the status of an initiator and the job classes assigned to it.

This command has parameters you can use as a filtering technique to limit the type of information to search, or the amount of information to display. See “Using filtering to control and display information” on page 99 for additional information.

Syntax

```
►►─$D──┬─I────┬──┬──────────────────────────────────────────────────────────────────────────────────────────────────►
       └─Init─┘  │ ┌─nn──┬──────────┬──┐                                                                            │
                 │ │     └─-──┬─mm─┬─┘  │                                                                            │
                 │ │          └─*──┘    │                                                                            │
                 │ ├─'init'─────────────┤                                                                            │
                 │ │      ┌──,──────────┐                                                                            │
                 │ │      ▼             │                                                                            │
                 │ └─(────┬─nn─┬──┬──────┬──┬─)─┘                                                                    │
                 │        │ └─*──┘  │ ┌─mm─┬─┘  │                                                                    │
                 │        │         │ │ └─*──┘    │                                                                    │
                 │        ├─init────┤ │           │                                                                    │
                 │        └─'init'──┘ │           │                                                                    │
                 │                    │           │                                                                    │
                 ├─┤ Selection limiting keywords ├─┘                                                                    │
                 │                                                                                                    │
►────────────────┴──────────────────────────────────────────────────────────────────────────────────────────────────►◄
  └─┤ Display limiting keywords ├─┘
```

Display limiting keywords:

```
├──┬──────────────┬──┬──────────┬──┬──────────┬──┬──────────────────┬──┬──────────┬──┬──────────┬──►
   └─,ACTCLASS────┘  └─,ASID────┘  └─,Class───┘  └─,INELigible_class─┘  └─,JOBID───┘  └─,JOBNAME──┘  └─,Long──┘

►──┬──────────┬──┬──────────┬──┤
   └─,STATUS──┘  └─,STC─────┘
```

Selection limiting keywords:

```
├──┬──────────────────────────────┬──┬──────────────────────────────┬──┬──────────────────────────────┬──►
   │ ┌──────────────────────────┐ │  │ ┌──────────────────────────┐ │  │ ┌──────────────────────────┐ │
   └─┼─,──┬──────┬─ACTCLASS─┬─=──┬─┼─┘ └─┼─,──┬──────┬─ASID────┬─=──┬─┼─┘ └─┼─,──┬──────┬─Class───┬─=──┬─┼─┘
     │ └─/────┘  │         │ ^= │ │     │ └─/────┘  │         │ ^= │ │     │ └─/────┘  │         │ ^= │ │
     │           │         │ >  │ │     │           │         │ >  │ │     │           │         │ >  │ │
     │           │         │ <  │ │     │           │         │ <  │ │     │           │         │ <  │ │
     │           │         └────┘ │     │           │         └────┘ │     │           │         └────┘ │
►────┴──────────────────────────────┴─────┴──────────────────────────────┴─────┴──────────────────────────────►

   ┌──────────────────────────┐  ┌──────────────────────────┐  ┌──────────────────────────┐
   │ ┌──,──┬──────┬─JOBID───┬─=──┬─┼─┐  │ ┌──,──┬──────┬─JOBNAME─┬─=──┬─┼─┐  │ ┌──,──┬──────┬─NAME────┬─=──┬─┼─┐
   │ │   └─/────┘  │       │ ^= │ │ │  │ │   └─/────┘  │         │ ^= │ │ │  │ │   └─/────┘  │       │ ^= │ │ │
   │ │             │       │ >  │ │ │  │ │             │         │ >  │ │ │  │ │             │       │ >  │ │ │
   │ │             │       │ <  │ │ │  │ │             │         │ <  │ │ │  │ │             │       │ <  │ │ │
   │ │             │       └────┘ │ │  │ │             │         └────┘ │ │  │ │             │       └────┘ │ │
►──┴─┴─────────────────────────────┴─┴──┴─┴─────────────────────────────┴─┴──┴─┴─────────────────────────────┴─┴──►

   ┌──────────────────────────────┐  ┌──────────────────────────┐
   │ ┌──,──┬──────┬─STATUS──┬─=──┬─┼─┐  │ ┌──,──┬──────┬─STC─────┬─=──┬─┼─┐
   │ │   └─/────┘  │        └─^=─┘ │ │  │ │   └─/────┘  │       │ ^= │ │ │
   │ │             │ ┌─ACTIVE───┐  │ │  │ │             │       │ >  │ │ │
   │ │             │ ├─DRAINED──┤  │ │  │ │             │       │ <  │ │ │
   │ │             │ ├─DRAINING─┤  │ │  │ │             │       └────┘ │ │
   │ │             │ ├─HALTED───┤  │ │  │ │             │              │ │
   │ │             │ ├─HALTING──┤  │ │  │ │             │              │ │
   │ │             │ ├─INACTIVE─┤  │ │  │ │             │              │ │
   │ │             │ ├─RESTARTING┤ │ │  │ │             │              │ │
   │ │             │ └─STARTING─┘  │ │  │ │             │              │ │
   │ │             │               │ │  │ │             │              │ │
►──┴─┴─────────────────────────────┴─┴──┴─┴─────────────────────────────┴─┴──┤
```

Parameters

I[init[-init]]
Specifies the subscript (1-9999) of the initiator(s) that are displayed.

ACTCLASS=actclass
Displays the job class of the job being actively processed by the initiator.

ASID=asid
Displays the ASID of the address space in which the initiator is running.

Class=class
Displays the list of classes associated with the initiator. Classes associated with the initiator but ineligible to select work are not displayed in the list (but are matched on a filter).

INELigible_class
Displays those classes which are associated with the initiator but ineligible to select work. Classes are displayed with an indicator as to why the class is eligible:

HELD
The initiator cannot select work in this job class because the job class is held.

WLM
The initiator cannot select work from this job class because it is a WLM-mode job class.

JOBID=jobid
Displays the job id of the job active on this initiator.

JOBNAME=jobname
Displays the job name of the job active on this initiator.

Long
Specifies the long form of the display.

STATUS={ACTIVE|DRAINED|DRAINING|HALTED|HALTING|INACTIVE|RESTARTING|STARTING}
Displays the current state of the initiator.

ACTIVE
A job is active on the initiator.

DRAINED
The initiator is drained.

DRAINING
The initiator is transitioning to a DRAINED state.

HALTED
The initiator has been halted via a $Z I command.

INACTIVE
The initiator has been started but has not selected a job.

RESTARTING
The initiator has terminated abnormally and is in the process of restarting automatically.

STARTING
The initiator has been started but has not fully initialized yet.

STC=stc
Displays the job id of the initiator STC.

Authority Required

This command requires **display** authority. The description of the $T RDRnn command explains how to ensure the proper MVS system command group authority is assigned.

This command requires **read** security access authority. For a description of assigning command input authority, see *z/OS JES2 Initialization and Tuning Guide*.

Scope

Single Member. The response to this command will be a display of information about this member only. There is no need to issue this command for all members of the MAS.

Messages

The $HASP892 message displays the status of the specified initiators.

Examples

1

```
$d i1

$HASP892 INIT(1)    STATUS=INACTIVE,CLASS=A,NAME=1,ASID=0017
```

JES2 displays the status of initiator 1 and its assigned job class.

2

```
$d i2,long

$HASP892 INIT(2)    STATUS=ACTIVE,CLASS=A,NAME=1,ASID=0017,
$HASP892            JOBID=JOB00013,JOBNAME=JLNKCLW2,ACTCLASS=A
$HASP892            STC=STC00004
```

When you specify the LONG operand, additional information (JOBNAME, ACTCLASS, and STC) is displayed.

3

```
$d i3

$HASP892 INIT(3)    STATUS=ACTIVE,CLASS=C,
$HASP892            INELIGIBLE_CLASS=(A-HELD,B-WLM),NAME=3,
$HASP892            ASID=0018
```

Initiator 3 is displayed. Job classes A, B, and C were all specified in the class list for initiator 3, but the initiator cannot select from class A because the job class is held and cannot select from class B because it is a WLM-mode job class.

4

```
$di

$HASP892 INIT(1)    STATUS=INACTIVE,CLASS=A,NAME=1,ASID=012E
$HASP892 INIT(2)    STATUS=DRAINED,CLASS=AB,NAME=1
$HASP892 INIT(3)    STATUS=DRAINED,CLASS=ABC,NAME=44
$HASP892 INIT(4)    STATUS=DRAINED,CLASS=ABC,NAME=44
$HASP892 INIT(5)    STATUS=DRAINED,CLASS=JX,NAME=5
$HASP892 INIT(6)    STATUS=DRAINED,CLASS=A,NAME=6
$HASP892 INIT(7)    STATUS=DRAINED,CLASS=A,NAME=7
$HASP892 INIT(8)    STATUS=DRAINED,CLASS=A,NAME=8
$HASP892 INIT(9)    STATUS=DRAINED,CLASS=JX,NAME=9
$HASP892 INIT(10)   STATUS=DRAINED,CLASS=A,NAME=10
```

5

```
$di4

$HASP892 INIT(4)    STATUS=DRAINED,CLASS=ABC,NAME=44
```

Display initiator number 4.

6

```
$di44

$HASP003 RC=(03),I44  - INVALID PARAMETER STATEMENT
```

Display initiator number 44.

7

```
$di(44)

$HASP892 INIT(3)    STATUS=DRAINED,CLASS=ABC,NAME=44
$HASP892 INIT(4)    STATUS=DRAINED,CLASS=ABC,NAME=44
```

Display initiator, first as name of 44, then if not found, number of 44.

8

```
$di(4)

$HASP892 INIT(4)    STATUS=DRAINED,CLASS=ABC,NAME=44
```

Display initiator, first as name 4, then if not found, number of 4.

9

```
$di'1'

$HASP892 INIT(1)    STATUS=INACTIVE,CLASS=A,NAME=1,ASID=012E
$HASP892 INIT(2)    STATUS=DRAINED,CLASS=AB,NAME=1
```

Display initiator with name of 1.

10

```
$di(1)

$HASP892 INIT(1)    STATUS=INACTIVE,CLASS=A,NAME=1,ASID=012E
```

Display initiator with name of 1, then if not found, number of 1.

$D INTRDR - Display the Current INTRDR Initialization Statement Characteristics

Function

To display the current INTRDR initialization statement characteristics that will be given internal readers.

Syntax

```
►►──$D──INTRDR──┬──────────────────────────────┬──┬──────────────────────────────┬──────────►◄
                └┤ Selection limiting keywords ├┘  └┤ Display limiting keywords ├┘
```

Display limiting keywords:

```
├──┬──────────────────────────┬──┬─────────┬──┬─────────┬──┬─────────┬──┬──────────┬──┬──────────┬──►
   └─,Auth──┬──────────────────┬┘  └─,BATCH─┘  └─,Class─┘  └─,Hold──┘  └─,HONORlim─┘  └─,PRTYINC─┘
            │      ┌──────────┐│
            │      ▼          │
            └─=(───┬─Device──┬─┘)─┘
                   ├─Job─────┤
                   └─System──┘

►──┬─────────┬──┬─────────┬──┬─────────┬──┬─────────┬──┤
   └─,PRTYLIM─┘  └─,RDINUM─┘  └─,Sysaff─┘  └─,TRace─┘
```

Selection limiting keywords:

```
├──┬──────────────────────────────────────────────────────────────────────────────────────┬──┤
   │                                  ┌──────────────────────────────────────────────────┐│
   │                                  ▼                                                  │
   └─,──┬─────┬──Auth──=(──┬──┬─────┬──Device──┬──┬─────┬──┬──────┬──┬────┬──┬──────┬──┬──┴┘
        └─/───┘            │  └─/───┘          │  └─=───┘  └─^=───┘  └─No──┘  └─Yes───┘  │
                           │  ┌─────┐          │  ┌─────┐  ┌──────┐  ┌────┐  ┌──────┐  │
                           ├──└─/───┘──Job────┤  └─=───┘  └─^=───┘  └─No──┘  └─Yes───┘  │
                           │  ┌─────┐          │  ┌─────┐  ┌──────┐  ┌────┐  ┌──────┐  │
                           └──└─/───┘──System─┘  └─=───┘  └─^=───┘  └─No──┘  └─Yes───┘  │
                                                                                         )─┘
```

Parameters

Auth=[Device|Job|System]
Displays the command authority for internal readers.

BATCH
Displays whether internal readers defined through RDINUM can be used to process batch jobs.

Class
Displays the default job class to be assigned to all jobs submitted through the internal reader.

Hold
Displays whether jobs submitted through the internal reader are to be held after conversion.

HONORlim
Specifies if the datasets sent to the internal reader are to be counted toward the byte limit for a job.

INTRDR
The $HASP838 message displays the characteristics the current INTRDR initialization statement will give to the internal readers.

PRTYINC
Displays the value to be added to the selection priority of all jobs submitted through the internal reader.

PRTYLIM
Displays the highest allowable priority for jobs submitted through the internal reader.

RDINUM
Displays the number of internal readers defined on this member.

Sysaff
Displays the default system affinity for jobs submitted through the internal reader.

TRace
Displays whether tracing is currently active for internal readers.

Authority Required

This command requires **display** authority. The description of the $T RDRnn command explains how to ensure the proper MVS system command group authority is assigned.

This command requires **read** security access authority. For a description of assigning command input authority, see *z/OS JES2 Initialization and Tuning Guide*.

Scope

Single Member. The response to this command will be a display of information about this member only.

Messages

The $HASP838 displays the characteristics of the INTRDR initialization statement.

Example

1 `$d intrdr`

```
$HASP838 INTRDR  AUTH=(DEVICE=NO,JOB=YES,SYSTEM=NO),BATCH=YES,
$HASP838         CLASS=A,DCBATTR=NO,HOLD=NO,HONORLIM=NO,
$HASP838         PRTYINC=0,PRTYLIM=15,RDINUM=4,SYSAFF=(ANY),
$HASP838         TRACE=NO
```

$D Job - Display Information About Specified Jobs

Function

To display the following job information for a specified job:

- Number
- Name
- Status
- Class
- Priority
- Spool Volumes

Syntax

```
►►─$D─┬─Job──────┬─┬─────────────────────────────────────────┬─┬─────────────────────────────────────────┬─►
      ├─JOBQ─────┤ │ nn──┬──────┬──┬──────┬──┬──────┬──┬──┬─┬─┤ │ Selection limiting keywords │ │
      ├─JQ───────┤ │     └─-─mm─┘  │ nn───┬─┬─────┬─┬─┬─┬─┬─┬─┤ │                             │ │
      ├─Stc──────┤ │               │ *    │ │ mm  │ │ job │ │ │ │ │                             │ │
      └─Tsu──────┘ │               │      │ │ *   │ │ 'job' │ │ │ │                             │ │
                   │               │      │ │     │ │ *     │ │ │ │                             │ │
                   │               │      │ │     │ │       │ │ │ │                             │ │
                   │               │      │ │     │ │       │ │ │ │                             │ │
                   │               │      │ │     │ │       
```

```
├─┬─────────────────────────────────────┬─┬─────────────────────────────────────┬──►
  │ ,  ┌─/─┐ ARM_element ┌─=──┐ ┌─No──┐ │ │ ,  ┌─/─┐ CANCEL ┌─=──┐ ┌─No──┐ │
  │    └───┘             └─¬=─┘ └─Yes─┘ │ │    └───┘        └─¬=─┘ └─Yes─┘ │

►─┬─────────────────────────────────────────────────────────────────────────────►
  │ ,  ┌─/─┐ CARDS ┌─=──┐ cards │
  │    └───┘       ├─¬=─┤       │
                   ├─>──┤
                   └─<──┘

►─┬─────────────────────────────────────────────────────────────────────────────►
  │                  ┌──────────────────────────────────────────────────┐
  │ ,  ┌─/─┐ CC-=(   ▼ ,                                                │
  │    └───┘         │ ┌─/─┐ ABEND ┌─=──┐ ┌─system──────────────────┐ │
  │                  │ └───┘       └─¬=─┘ └─(-system──────────────)─┘ │
  │                  │                       └─,user─┘                  │
  │                  │ ┌─/─┐ CODE ┌─=──┐ code                          │
  │                  │ └───┘      ├─¬=─┤                                │
  │                  │            ├─>──┤                                │
  │                  │            └─<──┘                                │
  │                  └──────────────────────────────────────────────────┘ )─┘

►─┬─────────────────────────────────────────────────────────────────────────────►
  │ ,  ┌─/─┐ Class ┌─=──┐ class │ │ ,  ┌─/─┐ CMDauth ┌─=──┐ cmdauth │
  │    └───┘       ├─¬=─┤       │ │    └───┘         └─¬=─┘         │
                   ├─>──┤       │                     ┌──────────┐   │
                   └─<──┘       │                     ▼ ,        │   │
                                │                     │ (1)      │   │
                                │                     └─cmdauth──┘   │
                                │                     (──────────)   │
                                └─────────────────────────────────────┘

►─┬─────────────────────────────────────────────────────────────────────────────►
  │ ,  ┌─/─┐ Age ┌─>──┐ days │ │ ,  ┌─/─┐ DELAY ┌─=──┐ BUSY_ON_DEVICE │
  │    │   │     └─<──┘       │ │    └───┘       └─¬=─┘ HOLD           │
  │    └─/─┘ DAys              │                        LIMIT           │
  │                            │                        LOCKED          │
  │                            │                        MEMBER_STATUS   │
  │                            │                        No              │
  │                            │                        SCHENV          │
  │                            │                        SPOOLS_NOT_AVAILABLE │
  │                            │                        SYSAFF          │
  │                            │                        Yes             │

►─┬─────────────────────────────────────────────────────────────────────────────►
  │ ,  ┌─/─┐ EOM ┌─=──┐ Yes │ │ ,  ┌─/─┐ HOLD ┌─=──┐ ALL │ │ ,  ┌─/─┐ Hours ┌─>──┐ hours │
  │    └───┘     └─¬=─┘ No  │ │    └───┘      └─¬=─┘ ARM │ │    └───┘       └─<──┘       │
                              │                        DUP │
                              │                        JOB │
                              │                        NONE│

►─┬─────────────────────────────────────────────────────────────────────────────►
  │ ,  ┌─/─┐ INITASID ┌─=──┐ initasid │ │ ,  ┌─/─┐ JM ┌─/─┐ JOBMASK ┌─=──┐ jobmask │
  │    └───┘          ├─¬=─┤          │ │    └───┘    └───┘         ├─¬=─┤          │
                      ├─>──┤          │                           ├─>──┤
                      └─<──┘          │                           └─<──┘
                                      └─────────────────────────────────────┘

►─┬─────────────────────────────────────────────────────────────────────────────►
  │ ,  ┌─/─┐ OFFS ┌─=──┐ offs │ │ ,  ┌─/─┐ Priority ┌─=──┐ priority │
  │    └───┘      └─¬=─┘      │ │    └───┘          ├─¬=─┤          │
                               │                    ├─>──┤
                               │                    └─<──┘
                               │  ┌──────────┐
                               │  ▼ ,        │
                               │  │ (2)      │
                               │  └─offs────┘
                               │  (──────────)
                               └─────────────────────────────────────┘

►─┬─────────────────────────────────────────────────────────────────────────────►
  │ ,  ┌─/─┐ PURGE ┌─=──┐ ┌─No──┐ │ │ ,  ┌─/─┐ Queue ┌─=──┐ CNV │
  │    └───┘       └─¬=─┘ └─Yes─┘ │ │    └───┘       └─¬=─┘ INPUT │
                                   │                        OUT   │
                                   │                        PPU   │
                                   │                        PURGE │
                                   │                        RCV   │
                                   │                        SETUP │
                                   │                        SPIN  │
                                   │                        XEQ   │
                                   │                        XMT   │
```

```
►──┬──────────────
```

Job
A Batch job or range of batch jobs is to be displayed.

JOBQ|JQ
Specifies *all* jobs, STCs, and TSUs across the MAS for processing.

Stc
A started task or range of started tasks is to be displayed.

Tsu
A time-sharing user or range of time-sharing users is to be displayed.

Age|DAys<days | Age|DAys>days
Specifies the age of affected jobs in days. Only jobs more (with DAYS>nn) or less (with DAYS<nn) than the specified number of days in age are affected, The days are counted from the current hour.

ARM_element={No|Yes}
Displays whether (Yes) or not (No) the job is registered with the Automatic Restart Management (ARM).

CANCEL=[No|Yes]
Cancel only jobs which have been cancelled (Yes) or have not been cancelled (No).

CARDS=cards
Displays the number of input cards associated with the job.

CC=(ABEND|ABENDED|CANcelled|CNVT_abend|CODE|COMPleted|ENDed_by_cc|EOM_failure|JCLerror| SECurity_failure|TYPE)
Displays the completion information associated with the job.

ABENDED
Display only jobs which ABENDed.

ABEND
Displays the ABEND code associated with the job's termination.

CANcelled
Display only jobs which were cancelled by the operator.

CNVT_abend
Display only jobs which ABENDed during the conversion phase.

CODE
Displays the last (or highest) completion code of steps in the job.

COMPleted
Display only jobs which completed.

ENDed_by_cc
Display only jobs which were ended by a step completion code.

EOM_failure
Display only jobs which failed in end-of-memory processing.

JCLerror
Display jobs which did not execute due to a JCL error.

SECurity_failure
Display jobs which failed security validation.

Class=class
Displays the class associated with the job

CMDauth=(cmdauth{,cmdauth})
Only the jobs that can be affected from the specified remote(s) or node(s) will be displayed. The valid specifications are:

LOCAL|ANYLOCAL
Only the local devices at the local node can affect the output.

Nnnnn|nodename
Only local devices at the specified node can affect the output.

Rnnnn
Only the specified remote device can affect the output.

NnnnnRnnnn|nodename.Rnnnn
Only the specified remote device at the specified remote node can affect the output.

destid
A destid corresponding to any of the above remote devices.

Note: Specification of the CMDAUTH filter does not override the authority of the console from which the command is issued; both the authority of the console and the specified CMDAUTH filter must match for the job to be affected.

DELAY={BUSY_ON_HOLD|HOLD|LIMIT|LOCKED|
No|SCHENV|SPOOLS_NOT_AVAILABLE|SYSAFF| MEMBER_STATUS|Yes}
Displays reasons why a pre-execution job will not enter execution:

BUSY_ON_DEVICE
The job will not execute because it is busy on a device (such as an offload job transmitter).

HOLD
The job will not execute because it is held, its job class is held, or another job with the same jobname is executing.

LIMIT
The job will not execute because the job class execution limit has been reached (as specified by JOBCLASS XEQCOUNT=(MAX=)).

LOCKED
The job will not execute because it's being updated by JES2.

SYSAFF
Each of the members for which the job has affinity (SYSAFF) is inactive, or the job has specified independent state, and the JES2 member is not independent (IND=NO).

SCHENV
The job's scheduling environment is not available on any member, or is available only on systems where JES2 is inactive. Use the $DJ'jobname',LONG command to find out what scheduling environment a job requires. Then use the D WLM,SCHENV=schenv-name command to find out the current status of the scheduling environment on each system in the sysplex.

The SCHENV state masks other reasons why the job might be ineligible to run, such as the $P and $P XEQ commands having been issued. Also, note that the SCHENV delay is detected only after a job goes through

conversion. If a job is delayed prior to conversion due to system affinity requirements, scheduling environments are not considered in determining delay status.

MEMBER_STATUS
A combination of system affinity and scheduling environment restrictions are preventing the job from running, or, other member states prevent the job from running on systems where the job is otherwise eligible. These states include:

- $P command has been issued
- $P XEQ command has been issued
- BOSS=NO (used in a poly-JES environment only)

When used as a command filter, the string MEMBER_STATUS matches on jobs delayed for SYSAFF, SCHENV, or MEMBER_STATUS. To get detail on why a job is delayed, display job status with the $DJ'jobname',LONG command or display member status with the $DJMEMBER(member-name) command.

Yes
Display only jobs which are delayed for any of the above reasons.

No
Display only jobs which are not delayed for any of the above reasons.

EOM={No|Yes}
Displays whether or not the job is currently queued to the JES2 address space for end of memory processing. EOM= is only displayed while the job is queued for processing. EOM=NO is never displayed.

HOLD
Displays the hold status of the job.

ALL
Display jobs held via the $H A command.

JOB
Display jobs held via the $H J command, TYPRUN=HOLD, TYPRUN=JCLHOLD, or held due to error.

DUP
Display jobs held for duplicate job name.

ARM
Display jobs which are held awaiting restart via ARM.

NONE
Display jobs which are not held.

Hours=hours
Specifies the age of affected jobs in hours. Only jobs more (with HOURS>nn) or less (with HOURS<nn) than the specified number of hours in age are affected.

INITASID=initasid
For initiator jobs, displays the address space identifier (ASID) associated with the initiator.

JOBMASK|JM=jobmask
Specifies 1 to 8 alphanumeric, special ($, #, or @) or wildcard characters (or a combination of them) that can be used to select a subset of jobs whose job

name matches this combination of characters (mask). For a description of wildcards, see “Using Wildcards” on page 93.

Notes:

1. This is a positional parameter. Specify this following the job_id (JOB, STC, or TSU), or JOBQ parameter.
2. You must specify JOBMASK if you specified either the JOBQ parameter or an asterisk (n-*) on the job_id parameter.
3. The JOBMASK parameter is not valid with the *‘jobname ’* parameter.

LONG
If you specify the LONG operand, JES2 will display the following information:
- The userid of the job
- The spool volumes on which the specified jobs have space allocated
- The remote consoles or nodes that can enter commands that affect a job (CMDAUTH)
- Whether or not the job uses the automatic restart management services.

OFFS=offs
Displays offload device numbers on which the job has been archived.

Priority=priority
Displays the priority of the job.

PURGE={No|Yes}
Indicates that only jobs which are (Yes) or are not (No) pending purge processing should be displayed.

Queue={CNV|INPUT|OUT|PPU|PURGE|RCV| SETUP|SPIN|XEQ|XMT}
Only jobs on the specified job queue are to be displayed.

CNV
Only jobs awaiting conversion are to be displayed.

INPUT
Only jobs on the JES2 $INPUT queue are to be displayed.

OUT
Only jobs awaiting output processing are to be displayed.

PPU
Only jobs awaiting print/punch processing are to be displayed.

PURGE
Only jobs awaiting purge processing are to be displayed.

RCV
Only jobs on the JES2 $RECEIVE queue are to be displayed.

SETUP
Only jobs on the JES2 $SETUP queue are to be displayed.

SPIN
Only jobs awaiting spin processing are to be displayed.

XEQ
Only jobs awaiting or in execution are to be displayed.

XMT
Only jobs queued for network transmission are to be displayed.

REBUILD={No|Yes}
Jobs on the rebuild queue are to be displayed (Yes) or not displayed (No).

SCHENV=schenv
Displays the scheduling environment associated with the job.

SCHENV_AFF=member
Displays the JES2 MAS members on which the scheduling environment for this job is available.

SECLABEL=seclabel
Displays the security label associated with the job.

SPINNABLE=spinnable
Indicates that the JESLOG data sets can be spun (made available) while the job is executing.

SPL|SPOOL={Percent|%|Tgs|Volumes}
Only jobs with specific SPOOL characteristics are to be displayed:

Percent|%
Only jobs using more (with %>nn) or less (with %<nn) than the specified percentage of the total available spool space are to be displayed.

Tgs
Only jobs using more (with Tgs>nn) or less (with Tgs<nn) than the specified number of track groups are to be displayed.

Volumes=(v1,v2,...)
Only jobs which have allocated spool space on the specified spool volume(s) are to be displayed.

SRVCLASS=srvclass
Displays the service class of the job. The service class is available for batch jobs only. It is not available for started tasks or time-sharing users.

Sysaff=member
Displays the job's system affinity.

TYPE={JOB|STC|TSU}
Indicates whether only batch jobs (JOB), started tasks (STC), or time-sharing users (TSU) are to be displayed.

USERID=userid
Displays the userid associated with the job.

XEQNODE=xeqnode
Only jobs which are destined to execute at the specified node, or which have already executed at the specified node, are to be displayed. The node name may be specified using the decimal node number (Nnnnnn) or an EBCDIC node name.

Authority Required

This command requires **display** authority. The description of the $T RDRnn command explains how to ensure the proper MVS system command group authority is assigned.

This command requires **read** security access authority. For a description of assigning command input authority, see *z/OS JES2 Initialization and Tuning Guide*.

Processing Considerations

If you first specify the MVS command CONTROL S,MFORM=J, you can display the job number as well as the job name with the $D job command. For a description of the MVS CONTROL command, see *z/OS MVS System Commands*.

Scope

MAS-Wide. This command displays information about the entire MAS.

Messages

The $HASP890 message displays the current status of the indicated job.

Examples

1 `$d j'myjob'`

```
JOB00017  $HASP890 JOB(MYJOB)
$HASP890 JOB(MYJOB)     STATUS=(AWAITING EXECUTION),CLASS=H,
$HASP890                PRIORITY=9,SYSAFF=(ANY),HOLD=(JOB)
```

JES2 displays job information for all jobs with the name MYJOB (1 batch job, in hold status).

2 `$d j1-*,jm=ieb*`

```
JOB00009  $HASP890 JOB(IEBGENER)
$HASP890 JOB(IEBGENER)  STATUS=(AWAITING EXECUTION),CLASS=9,
$HASP890                PRIORITY=9,SYSAFF=(ANY),HOLD=(JOB)
```

JES2 displays job information for all batch jobs whose job name begins with the characters IEB.

3 `$d j1-*,q=ppu,cc`

```
JOB00008  $HASP890 JOB(J1)         CC=(COMPLETED,CODE=0)
JOB00030  $HASP890 JOB(J2)         CC=(ABENDED,ABEND=(S0C4,U000))
JOB00031  $HASP890 JOB(J3)         CC=(COMPLETED,CODE=4)
JOB00034  $HASP890 JOB(J4)         CC=(ENDED_BY_CC,CODE=8)
```

JES2 displays job completion information (the CC parameter) for all batch job awaiting print/punch processing.

4 `$d jq,delay=yes,delay`

```
JOB00100  $HASP890 JOB(BATCH1)     DELAY=(HOLD)
JOB00102  $HASP890 JOB(BATCH2)     DELAY=(HOLD)
JOB00105  $HASP890 JOB(BATCH3)     DELAY=(HOLD,LIMIT,SCHENV)
JOB00140  $HASP890 JOB(BATCH4)     DELAY=(MEMBER_STATUS)
```

For all delayed jobs in the system (DELAY=YES), JES2 displays the reason for the job not entering execution. In this example, jobs BATCH1 and BATCH2 are delayed because of some form of HOLD, job BATCH3 is delayed for multiple reasons, and BATCH4 is delayed because no system is eligible to select the job.

5 `$d jq,delay=schenv,schenv`

```
JOB00105  $HASP890 JOB(BATCH3)     SCHENV=DB2
```

JES2 displays the scheduling environment for all jobs which will not execute because the scheduling environment is unavailable. In this example, job BATCH3 will not execute because its scheduling environment, DB2, is not available on any active member.

6 `$dj'myjob',long`

```
JOB00007  $HASP890 JOB(MYJOB)
$HASP890 JOB(MYJOB)     STATUS=(EXECUTING/IBM1),CLASS=B,
$HASP890                PRIORITY=9,SYSAFF=(ANY),HOLD=(NONE),
$HASP890                CMDAUTH=(LOCAL),OFFS=(),SECLABEL=,
$HASP890                USERID=IBMUSER,SPOOL=(VOLUMES=(SPOOL1),
```

```
$HASP890                TGS=6,PERCENT=1.1428),ARM_ELEMENT=NO,
$HASP890                CARDS=185,REBUILD=NO,SRVCLASS=DISCRETN,
$HASP890                SCHENV=,SCHENV_AFF=(IBM1),CC=()
```

JES2 displays extended attributes for the job named MYJOB.

7

```
$d jq,spool=(v=spool1,percent>1)

JOB00007  $HASP890 JOB(MYJOB)
$HASP890 JOB(MYJOB)     STATUS=(EXECUTING/IBM1),CLASS=B,
$HASP890                PRIORITY=9,SYSAFF=(ANY),HOLD=(NONE),
$HASP890                SPOOL=(VOLUMES=(SPOOL1),TGS=6,
$HASP890                PERCENT=1.1428)
JOB00018  $HASP890 JOB(MYJOB2)
$HASP890 JOB(MYJOB2)    STATUS=(EXECUTING/IBM1),CLASS=B,
$HASP890                PRIORITY=9,SYSAFF=(ANY),HOLD=(NONE),
$HASP890                SPOOL=(VOLUMES=(SPOOL1),TGS=6,
$HASP890                PERCENT=1.1428)
```

JES2 displays all jobs which use more than 1% of spool which utilize spool space on volume SPOOL1.

8

```
$dj36,days<1

JOB00036  $HASP890 JOB(DEST10)
$HASP890 JOB(DEST10)    STATUS=(AWAITING EXECUTION),CLASS=A,
$HASP890                                PRIORITY=9,SYSAFF=(ANY),HOLD=(NONE)
```

JES2 displays any job 36 if age is less than one day.

9

```
$dj36,hours

JOB00036  $HASP890 JOB(DEST10)    HOURS=0
```

JES2 displays hours for job 36.

10

```
$dj1-999,hours

JOB00036  $HASP890 JOB(DEST10)    HOURS=0
JOB00037  $HASP890 JOB(DEST11)    HOURS=0
JOB00038  $HASP890 JOB(DEST12)    HOURS=0
JOB00039  $HASP890 JOB(DEST13)    HOURS=0
JOB00040  $HASP890 JOB(DEST14)    HOURS=0
JOB00041  $HASP890 JOB(DEST15)    HOURS=0
JOB00042  $HASP890 JOB(DEST16)    HOURS=0
JOB00043  $HASP890 JOB(DEST17)    HOURS=0
```

JES2 displays hours for each job in range of 1 through 999.

11

```
$dj36,age<1

JOB00036  $HASP890 JOB(DEST10)
$HASP890  JOB(DEST10)  STATUS=(AWAITING EXECUTION),CLASS=A,
$HASP890         PRIORITY=9,SYSAFF=(ANY),HOLD=(NONE)
```

JES2 displays job 36 if age is less than one day.

$D JOBCLASS(n) - Display Job Class Characteristics

Function

To display information about the job class characteristics including:

- The default disposition of the JES data sets created by jobs in a specified job class
- An execution batch monitor procedure that is to be used for jobs in a specified class.

This command has parameters you can use as a filtering technique to limit the type of information to search, or the amount of information to display. See “Using filtering to control and display information” on page 99 for additional information.

Syntax

```
►►──$D──JOBCLASS──┬──────────────────────────────────────────────┬──┬──────────────────────────────┬──►
                  ├─'jobclass'──────────────────────────────────┤  │ Selection limiting keywords  │
                  │          ┌──────────────────────────────┐    │  └──────────────────────────────┘
                  └──(──────▼──┬─jobclass──────────┬──┬─────────┬──┘──)──┘
                               ├─'jobclass'────────┤  │─-jobclass─┤
                               └─*─────────────────┘  │─-'jobclass'─┤
                                                      └─-*────────┘

►──┬──────────────────────────────┬──────────────────────────────────────────────────────────►◄
   │ Display limiting keywords    │
   └──────────────────────────────┘
```

Display limiting keywords:

```
├──┬──────┬──┬──────┬──┬──────┬──┬─────────┬──┬──────┬──┬──────┬──┬──────┬──►
   │,ACCT─┘  │,AUTH─┘  │,BLP─┘  │,COMMAND─┘  │,CONDPURG─┘  │,COPY─┘  │,HOLD─┘  │,IEFUJP─┘

►──┬──────┬──┬──────┬──┬──────┬──┬──────┬──┬──────┬──┬─────────┬──┬──────┬──►
   │,IEFUSO─┘  │,JESLOG─┘  │,JOURNAL─┘  │,LOG─┘  │,MODE─┘  │,MSGCLASS─┘  │,MSGLEVEL─┘  │,NAME─┘

►──┬──────────┬──┬──────┬──────────────────────────────────────────────────────────►
   │,OUTDisp──┘  │,OUTPUT─┘

►──┬──────────┬──┬──────────┬──┬──────┬──┬──────┬──┬──────┬──┬──────┬──┬──────┬──►
   │,PERFORM──┘  │,PGMRNAME─┘  │,PROCLIB─┘  │,QHELD─┘  │,REGION─┘  │,RESTART─┘  │,SCAN─┘

►──┬──────────┬──┬──────┬──┬──────┬──┬──────────┬──┬──────┬──┬──────┬──────────────►
   │,SCHENV───┘  │,SWA──┘  │,TIME─┘  │,TYPE26───┘  │,TYPE6─┘  │,XBM──┘

►──┬──────────────────────────────────────────────┬──────────────────────────────────┤
   │,XEQCount──┬──────────────────────────────────┬│
             │          ┌──────────────────┐      │
             └──=(──────▼──┬─CURrent──┬──)──┘
                           └─MAXimum──┘
```

Selection limiting keywords:

```
├──┬──────────────────────────────┬──┬──────────────────────────────────────┬──┬──────────────────────────────┬──►
   │,──┬──────┬──ACCT──┬──────┬──┬──┘  │,──┬──────┬──AUTH──┬──────┬──┬──────┬──┘  │,──┬──────┬──BLP──┬──────┬──┬──┘
   │   │/─────┘  │¬=────┘  │No────┘  │     │/─────┘  │¬=────┘  │ALL───┬──┘     │     │/─────┘  │¬=────┘  │No────┘  │
   │                         │Yes───┘  │                         │CONS──┤        │                         │Yes───┘  │
   │                                   │                         │INFO──┤        │                                   │
   │                                   │                         │IO────┤        │                                   │
   │                                   │                         └SYS───┘        │                                   │
```

```
►─┬─────────────
```

ACCT={No|Yes}
Displays whether an account number is required (YES) or not required (NO) on a JCL JOB statement.

AUTH{=ALL|CONS|INFO|IO|SYS}
Displays the MVS operator command groups that are to be executed. The display will be one of the following:
- ALL (to include all operator command types)
- CONS (console commands)
- INFO (information commands such as display)
- IO (input/output commands)
- SYS (system commands)

For an explanation of operator command groups and the relationship of JES2 to MVS command groups, refer to *z/OS MVS System Commands*.

BLP{=No|Yes}
Displays that either the bypass label processing parameter in the label field of a DD statement is to be ignored (NO) and processed as no label, or that bypass label processing is performed as requested (YES) and the label parameter is processed as it appears.

COMMAND[=IGNORE|DISPLAY|EXECUTE|VERIFY]
Displays the disposition of commands read from the input stream as follows.

IGNORE
The command is ignored.

DISPLAY
The command is displayed and scheduled for execution.

EXECUTE
The command is scheduled for execution.

VERIFY
Specifies that the system displays the command, asks the operator whether the command should be executed and, if the operator replies “YES”, schedules the command for execution.

CONDPURG
Specifies whether (Yes) or not (No) system data sets (such as JESMSG and SYSMSG) in this jobclass are to be displayed.

COPY{=No|Yes}
Displays whether (Yes) or not (No) jobs in this job class are to be queued for output processing as though TYPRUN=COPY was specified on the JOB statement for these jobs.

HOLD{=No|Yes}
Displays whether (Yes) or not (No) jobs in this job class are to be held until a RELEASE command is issued by the operator.

IEFUJP{=No|Yes}
Displays whether (Yes) or not (no) the IEFUJP installation exit is to be taken when a job is purged.

IEFUSO{=No|Yes}
Displays whether (Yes) or not (No) the IEFUSO installation exit is to be taken when the SYSOUT limit is reached for a job in this job class.

JESLOG{=SPIN|NOSPIN|SUPPRESS}
Displays the order of precedence for JOBs/STCs/TSUs for JESLOG from most dominant to least dominant. That order is:

1. The specification on the JOB statement.
2. Specifications supplied by installation exits.
3. The JOBCLASS statement.

SPIN
JESLOG is spin-eligible.

NOSPIN
JESLOG will not be spun.

SUPPRESS
JESLOG will be suppressed.

JOURNAL{=No|Yes}
Displays whether (Yes) or not (No) job-related information is to be saved in a job journal.

LOG{=No|Yes}
Displays whether (Yes) or not (No) the JES2 job log is to be printed for this job class.

MODE={JES|WLM}
Displays whether jobs in this class are to be run under JES-mode or WLM-mode initiators.

MSGCLASS
Specifies the message class (A-Z,0-9) for started tasks or time-sharing users.

MSGLEVEL
Displays the message level value. The first value specifies the kinds of JCL listed:

0 JOB statement only

1 Input statements, cataloged procedure statements, and symbolic parameter substitution values

2 Input statements only, including instream procedures.

The second value specifies the kinds of allocation/termination messages listed:

0 No messages are to be listed, except in the case of an abnormal termination, in which case allocation/termination messages are listed.

1 Allocation/termination messages are listed.

NAME=name
Specifies a job class name to be used in selecting jobs from the job class.

OUTDisp=[=HOLD|KEEP|LEAVE|PURGE|WRITE]
Displays the default output disposition for JES data sets created for jobs in this class.

Output dispositions are:

HOLD Hold the output. JES2 does not process the output until you either change the disposition to WRITE or KEEP, or release the output. When the output is released, the disposition changes to WRITE.

KEEP Process the output and then keep a copy of it on spool. After processing, the disposition of this output becomes LEAVE.

LEAVE
JES2 does not process the output until you change the disposition to WRITE or KEEP, or release the output. When the output is released, the disposition changes to KEEP.

PURGE
Purge the output immediately.

WRITE
Process the output then purge it.

OUTPUT{=No|Yes}
Displays whether (Yes) or not (No) SYSOUT data is to be written for jobs executed in this job class.

PERFORM[=perform]
Displays the default performance group number for this job class. Any integer (0-999) can be specified.

PGMRNAME{=No|Yes}
Displays whether a programmer name is required (YES) or not required (NO) on a JCL JOB statement.

PROCLIB[=proclib]
Displays the default procedure library number which is to be used for this job class. Any integer (0-99) can be specified.

QHELD[=No|Yes]
Displays whether (Yes) or not (No) jobs in this class are not selected for execution (meaning, they are held) on this member until the **class** is released from held status by operator command.

REGION[=region]
Displays the default for the region size assigned to each job step. The “nnnn” indicates the number of units that make up the default region size; the “x” indicates the unit of measure (either 'K' for Kilobytes or 'M' for Megabytes.)

RESTART[=No|Yes]
Displays whether (Yes) or not (No) JES2 is to requeue for execution any job of this job class that had been executing before the IPL of the system was repeated and a JES2 warm start was performed.

SCAN[=No|Yes]
Displays whether (Yes) or not (No) jobs in this job class are to be queued for output processing immediately after JCL conversion, as though TYPRUN=SCAN was specified on the JOB statement for these jobs.

SCHENV=xxxxx
The default SCHENV for a given JOBCLASS can be specified via $D JOBCLASS(c), SCHENV=xxxxx where xxxxx is a 1 to 16 character SCHENV. The SCHENV must be defined to WLM. If it is not, the setting will be ignored.

SWA{=ABOVE|BELOW}
Displays whether all eligible schedule work area (SWA) control blocks created for jobs in this job class will be placed above or below 16 megabytes in virtual storage.

TIME
Displays the default for the maximum time that each job step may run.

TYPE6[=No|Yes]
Displays whether (Yes) or not (No) JES2 is to produce type 6 SMF records for jobs in this job class.

TYPE26[=No|Yes]
Displays whether (Yes) or not (No) JES2 is to produce type 26 (job summary) SMF records for jobs in this job class.

XBM=xbm
Displays the procedure name JES2 uses as the target of an EXEC statement. The procedure names a program that processes the input submitted to this job class.

XEQCount=(CURrent|MAXimum)
Displays the current number of jobs that are executing, or the maximum number of jobs that can execute concurrently in the class.

Authority Required

This command requires **display** authority. The description of the $T RDRnn command explains how to ensure the proper MVS system command group authority is assigned.

This command requires **read** security access authority. For a description of assigning command input authority, see *z/OS JES2 Initialization and Tuning Guide*.

Scope

MAS-Wide. This command displays information about the entire MAS.

Messages

The $HASP837 message displays the current job class characteristics for the specified job classes.

Examples

1 `$d jobclass(A)`

```
$HASP837 JOBCLASS(A)         ACCT=NO,PGMRNAME=NO,TIME=(000030,
$HASP837                     00),REGION=0001M,COMMAND=DISPLAY,
$HASP837                     BLP=NO,AUTH=(ALL),MSGLEVEL=(0,1),
$HASP837                     COPY=NO,HOLD=NO,IEFUJP=YES,IEFUSO=
$HASP837                     YES,JOURNAL=YES,LOG=YES,MODE=JES,
$HASP837                     OUTDISP=(,),OUTPUT=YES,PERFORM=000,
$HASP837                     PROCLIB=00,QHELD=NO,RESTART=NO,
$HASP837                     SCAN=NO,SCHENV=,SWA=ABOVE,TYPE26=
$HASP837                     YES,TYPE6=YES,XBM=,
$HASP837                     XEQCOUNT=(MAXIMUM=*,CURRENT=0),
$HASP837                     JESLOG=(NOSPIN)
```

JES2 displays the status for class A.

2 `$d jobclass(*),qheld=yes,qheld`

```
$HASP837 JOBCLASS(A)  QHELD=YES
$HASP837 JOBCLASS(E)  QHELD=YES
$HASP837 JOBCLASS(I)  QHELD=YES
$HASP837 JOBCLASS(O)  QHELD=YES
$HASP837 JOBCLASS(U)  QHELD=YES
```

JES2 displays the held status for all job classes which have been held via the $T JOBCLASS,QHELD=YES command.

$D JOBDEF - Display Characteristics Assigned to Jobs

Function

To display the characteristics assigned to jobs entering the system.

Syntax

```
►►──$D──JOBDEF──┬──────────────────────────────────────────────────────────►
                │,ACCTFLD│ │,BAD_JOBNAME_CHAR│ │,CNVT_ENQ│ │,DUPL_JOB│ │,JCLERR│

►──┬──────────────────────────────────────────────────────────────────────►
   │,JNUMBASE│ │,JNUMFREE│ │,JNUMWARN│ │,JOBFREE│ │,JOBNUM│ │,JOBRBLDQ│ │,JOBWARN│

►──┬──────────────────────────────────────────────────────────────────────►
   │,PRTYHIGH│ │,PRTYJECL│ │,PRTYJOB│ │,PRTYLOW│

►──┬──────────────────────────────────────────────────────────────────────►◄
   │,PRTYRATE│ │,RANGE│ │,RASSIGN│
```

Parameters

JOBDEF
The $HASP835 message displays the characteristics assigned to jobs entering the JES2 system.

ACCTFLD
Specifies the JES2 form of the accounting information (the job accounting number and room number).

BAD_JOBNAME_CHAR
Specifies the character to use in place of invalid characters in a jobname. This translation is used for JES2 commands and displays as well as RACF entity names.

CNVT_ENQ
Displays action taken if the data set ENQ for a data set specified on a DD statement cannot be obtained.

DUPL_JOB
Specifies whether or not JES2 is allowed to concurrently execute batch jobs with the same name in the same MAS.

DELAY
Do not allow JES2 to execute batch jobs with the same name in the same MAS at the same time.

NODELAY
Allow JES2 to execute batch jobs with the same name in the same MAS at the same time.

JCLERR
Specifies if a JCL error is detected by JES2.

JNUMBASE
The last job number that was assigned to a job.

JNUMFREE
The number of available job numbers.

JNUMWARN
Specifies the percentage (0-100) of assignable job numbers that have been used for jobs submitted at the local node.

JOBFREE
The number of available job queue elements.

JOBNUM
Specifies the maximum number (10-200000) of jobs that can be in the JES2 job queue at any time.

JOBRBLDQ
Displays Yes if there are jobs on the rebuild queue.

JOBWARN
Specifies the percent (0-100) usage threshold of available job queue elements (JQEs).

PRTYHIGH
Specifies the upper priority limit (0-15) to be associated with the JES2 job priority-aging feature.

PRTYJECL
Specifies whether the JES2 /*PRIORITY control statement is supported.

PRTYJOB
Specifies whether the priority specified on the JCL JOB statement is supported.

PRTYLOW
Specifies the lower priority limit (0-15) to be associated with the JES2 job priority-aging feature.

PRTYRATE
Specifies the number (0-1440) of time periods into which a 24-hour day is to be divided for use increasing a job's priority by the JES2 priority-aging feature.

RANGE
Specifies the range of number (1-999,999) which JES2 will assign as JOBIDs to jobs which originated on the local node.

RASSIGN
Specifies whether job numbers outside of the RANGE= range can be used when jobs are received from NJE or spool reload.

Authority Required

This command requires **display** authority. The description of the $T RDRnn command explains how to ensure the proper MVS system command group authority is assigned.

This command requires **read** security access authority. For a description of assigning command input authority, see *z/OS JES2 Initialization and Tuning Guide*.

Scope

Mas-Wide. This command displays information about the entire MAS.

Messages

The $HASP835 message displays the keywords defined and their current values.

Example

1 `$D JOBDEF`

```
                $djobdef
$HASP835 JOBDEF
$HASP835 JOBDEF  ACCTFLD=OPTIONAL,BAD_JOBNAME_CHAR=?,
$HASP835         CNVT_ENQ=FAIL,JCLERR=NO,JNUMBASE=6,
$HASP835         JNUMFREE=9994,JNUMWARN=80,JOBFREE=495,
$HASP835         JOBNUM=500,JOBWARN=80,PRTYHIGH=10,PRTYJECL=YES,
$HASP835         PRTYJOB=NO,PRTYLOW=5,PRTYRATE=0,RANGE=(1,9999),
$HASP835         RASSIGN=YES,DUPL_JOB=DELAY
```

$D JOBPRTY - Display Current Job Priority Characteristics

Function

To display the current job priority characteristics defined in the JOBPRTY table.

Syntax

```
►►──$D──JOBPRTY──┬──────────────────────────────────────┬──┬──────────────┬──┬──────────┬──►◄
                 │┌──────────────────────────────────┐  │  │              │  │          │
                 ├─n──┬──────────┬──────────────────┤  │  └─,PRIORITY────┘  └─,TIME────┘
                 │    └─-──┬─n─┬──┘                  │  │
                 │         └─*─┘                     │  │
                 │   ┌──────────────────────────┐    │  │
                 │   ▼                          │    │  │
                 ├──(──┬─n─┬──┬──────────┬──┬──────)──┤  │
                 │     └─*─┘  └─-──┬─n─┬──┘  │         │  │
                 │                 └─*─┘     │         │  │
```

Parameters

JOBPRTY(n)
The $HASP832 message displays the current job priority characteristics defined by entry (n) in the JOBPRTY table.

PRIORITY
Specifies the job-scheduling priority (0-15) relationship with execution times.

TIME
Specifies the execution times (1-279620), in minutes, that are to be associated with job-scheduling priorities.

Authority Required

This command requires **display** authority. The description of the $T RDRnn command explains how to ensure the proper MVS system command group authority is assigned.

This command requires **read** security access authority. For a description of assigning command input authority, see *z/OS JES2 Initialization and Tuning Guide*.

Scope

Single Member. This response to this command will be a display of information about this member only.

Messages

The $HASP832 message displayed the keywords and their current values.

Example

1 **$D JOBPRTY**

```
$HASP832 JOBPRTY(1)   PRIORITY=9,TIME=2
$HASP832 JOBPRTY(2)   PRIORITY=8,TIME=5
$HASP832 JOBPRTY(3)   PRIORITY=7,TIME=15
$HASP832 JOBPRTY(4)   PRIORITY=6,TIME=279620
$HASP832 JOBPRTY(5)   PRIORITY=5,TIME=279620
$HASP832 JOBPRTY(6)   PRIORITY=4,TIME=279620
$HASP832 JOBPRTY(7)   PRIORITY=3,TIME=279620
$HASP832 JOBPRTY(8)   PRIORITY=2,TIME=279620
$HASP832 JOBPRTY(9)   PRIORITY=1,TIME=279620
```

$D L(nnnn).JR(n) - Display Line and Job Receiver Status

Function

To display information about the indicated line(s) and job receiver.

This command has parameters you can use as a filtering technique to limit the type of information to search, or the amount of information to display. See “Using filtering to control and display information” on page 99 for additional information.

One or more parameters on this command accepts wildcards. Parameter descriptions will note that.

Syntax

```
►►──$D──L──┬──────────────────────────────────────┬──.JR──┬──────────────────────────────────────┬──►
           │ nn ┬──────────┬                       │       │ nn ┬──────────┬                       │
           │    └─-──┬─mm─┬┘                       │       │    └─-──┬─mm─┬┘                       │
           │        └─*─┘                          │       │        └─*─┘                          │
           │  ┌──────────────────────────────┐     │       │  ┌──────────────────────────────┐     │
           │  ▼                              │     │       │  ▼                              │     │
           └──(──┬─nn─┬──┬──────────┬──┬─mm─┬──)──┘       └──(──┬─nn─┬──┬──────────┬──┬─mm─┬──)──┘
                 └─*──┘  └─-──┬─mm─┬┘  └─*──┘                   └─*──┘  └─-──┬─mm─┬┘  └─*──┘
                             └─*─┘                                            └─*─┘

►──┬──────────────────────────────────────┬──┬──────────────────────────────────────┬──►◄
   │┤ Selection limiting keywords ├────────┤  │┤ Display limiting keywords ├──────────┤
```

Display limiting keywords:

```
├──┬──────────┬──┬──────────┬──────────────────────────────────────────────────────────┤
   └─,HOLD────┘  └─,UNIT────┘
```

Selection limiting keywords:

```
├──┬──────────────────────────────────────┬──┬──────────────────────────────────────────┬──┤
   │                  ┌──────────┐        │  │                  ┌──────────┬──────┐      │
   └─,──┬──────┬─HOLD─┬─=────┬─No────┘     └─,──┬──────┬─UNIT─┬─=────┬─unit──┘
        └─/────┘      └─^=───┘ └─Yes───┘        └─/────┘      ├─^=───┤
                                                             ├─>────┤
                                                             └─<────┘
```

Parameters

nnmm
Specifies the 1 to 4 numeric subscript (1-32767) defining the line number(s) affected by this command.

(*) Specifies the numeric subscript (1-7) defining the job receiver affected by this command.

HOLD={No|Yes}
Displays whether the job received on the specified receiver is held (YES) or not (NO).

STATUS[=ACTIVE|DRAINED|DRAINING|HALTED| INACTIVE|STARTING]
Displays information about JES2-managed devices. The following types of status can be displayed:

Type	Meaning

ACTIVE
JES2 is using the device for job processing and will continue to do as long as jobs are both available and eligible for the device.

DRAINED
JES2 does not use the device until you start it with a $S command.

DRAINING
JES2 is using the device to process jobs, but will stop using this device once the current function has completed.

HALTED
JES2 has either requested operator assistance or an operator has entered the $Z command to halt the device. To start the device, you must enter a $S command.

INACTIVE
JES2 is not using the device, but would do so if a job were both available and eligible for the device.

STARTING
The device is being started. Applies to FSS-owned devices only.

UNIT={SNA|devnum|/devnum}
Displays a 4-digit hexadecimal device number for a binary synchronous communication (BSC) line. You can specify wildcards on this parameter. See “Using Wildcards” on page 93 for additional information.

Device numbers can be specified by any of the following formats:

```
UNIT=ddd
UNIT=dddd
UNIT=/ddd
UNIT=/dddd
```

where ddd and dddd represent the device numbers.

A slash (/) can optionally precede the device number (for compatibility with other commands that require a slash to denote a 4-digit device number).

Specify UNIT=SNA to obtain information about a systems network architecture (SNA) line.

Authority Required

This command requires **display** authority. The description of the $T RDRnn command explains how to ensure the proper MVS system command group authority is assigned. The $T INTRDR command sets the command authority for internal readers.

This command requires **read** security access authority. For a description of assigning command input authority, see *z/OS JES2 Initialization and Tuning Guide*.

Scope

Single Member. The response to this command will be a display of information about this member only. You might want to use this command to get information about all members in the MAS. To do so, you can use the MVS ROUTE *ALL command to issue this command to all active members (if the JES2 command character is the same on all members). See *z/OS MVS System Commands* for more information on using the ROUTE *ALL command.

Messages

The $HASP603 message displays information about the specified job receiver.

Example

```
1  $dl15.jr(1)

  $HASP603 L15.JR1   UNIT=SNA,STATUS=INACTIVE,HOLD=NO
```

JES2 displays the status of job receiver 1 at line 15.

$D L(nnnn).JT(n) - Display the Job Transmitter Status

Function

To display information about the indicated line(s) and job transmitter.

This command has parameters you can use as a filtering technique to limit the type of information to search, or the amount of information to display. See “Using filtering to control and display information” on page 99 for additional information.

One or more parameters on this command accepts wildcards. Parameter descriptions will note that.

Syntax

```
►►──$D──L──┬─nn──┬──┬──┬──┬──┬──┬──┬──┬──┬──┬──┬──┬──┬──┬──┬──┬──┬──┬──┬──┬──.JT──┬─nn──┬──┬──┬──┬──┬──┬──┬──┬──┬──┬──┬──┬──┬──┬──┬──┬──┬──┬──►
           │     │  ┌─mm─┐  │  │  │  │  │  │  │  │  │  │  │  │  │  │  │  │  │  │     │     │  ┌─mm─┐  │  │  │  │  │  │  │  │  │  │  │  │  │  │  │  │  │  │
           │     └──┬─*──┘  │  │  │  │  │  │  │  │  │  │  │  │  │  │  │  │  │  │     │     └──┬─*──┘  │  │  │  │  │  │  │  │  │  │  │  │  │  │  │  │  │  │
           │        ┌──────┴──┐  │  │  │  │  │  │  │  │  │  │  │  │  │  │  │  │     │        ┌──────┴──┐  │  │  │  │  │  │  │  │  │  │  │  │  │  │  │  │  │
           │        │         ▼  │  │  │  │  │  │  │  │  │  │  │  │  │  │  │  │     │        │         ▼  │  │  │  │  │  │  │  │  │  │  │  │  │  │  │  │  │
           └──(─────┴──nn──┬──┬──┴──┬──┬──┬──┬──┬──┬──┬──┬──┬──┬──┬──┬──┬──┬──┬──┬──┬──┬──┬
```

ACTIVE
JES2 is using the device for job processing and will continue to do as long as jobs are both available and eligible for the device.

DRAINED
JES2 does not use the device until you start it with a $S command.

DRAINING
JES2 is using the device to process jobs, but will stop using this device once the current function has completed.

HALTED
JES2 has either requested operator assistance or an operator has entered the $Z command to halt the device. To start the device, you must enter a $S command.

INACTIVE
JES2 is not using the device, but would do so if a job were both available and eligible for the device.

STARTING
The device is being started. Applies to FSS-owned devices only.

UNIT={SNA|devnum|/devnum}
Displays a 4-digit hexadecimal device number for a binary synchronous communication (BSC) line. You can specify wildcards on this parameter. See "Using Wildcards" on page 93 for additional information.

Device numbers can be specified by any of the following formats:

```
UNIT=ddd
UNIT=dddd
UNIT=/ddd
UNIT=/dddd
```

where ddd and dddd represent the device numbers.

A slash (/) can optionally precede the device number (for compatibility with other commands that require a slash to denote a 4-digit device number).

Specify UNIT=SNA to obtain information about a systems network architecture (SNA) line.

WS
Displays the work selection criteria for this line job transmitter.

Authority Required

This command requires **display** authority. The description of the $T RDRnn command explains how to ensure the proper MVS system command group authority is assigned. The $T INTRDR command sets the command authority for internal readers.

This command requires **read** security access authority. For a description of assigning command input authority, see *z/OS JES2 Initialization and Tuning Guide*.

Scope

Single Member. The response to this command will be a display of information about this member only. You might want to use this command to get information about all members in the MAS. To do so, you can use the MVS ROUTE *ALL command to issue this command to all active members (if the JES2 command

character is the same on all members). See *z/OS MVS System Commands* for more information on using the ROUTE *ALL command.

Messages

The $HASP603 message displays information about the specified job transmitter.

Example

```
1  $dl15.jt(1)

  $HASP603 L15.JT1   UNIT=SNA,STATUS=INACTIVE
```

JES2 displays information about job transmitter 1 on line 15.

$D L(nnnn).SR(n) - Display SYSOUT Receiver Status

Function

To display information about the indicated SYSOUT line(s) and receiver.

This command has parameters you can use as a filtering technique to limit the type of information to search, or the amount of information to display.

One or more parameters on this command accepts wildcards. Parameter descriptions will note that.

Syntax

```
►►──$D──L──┬──────────────────────────────────────┬──.SR──┬──────────────────────────────────────┬──►
           │─nn──┬──────────┬──────────────────────│       │─nn──┬──────────┬──────────────────────│
           │     └─-──┬─mm─┬─┘                      │       │     └─-──┬─mm─┬─┘                      │
           │          └─*──┘                        │       │          └─*──┘                        │
           │      ┌──────────────────────────┐      │       │      ┌──────────────────────────┐      │
           │      ▼                          │      │       │      ▼                          │      │
           │──(───┬─nn─┬──┬──────────┬──────┬──)──│       │──(───┬─nn─┬──┬──────────┬──────┬──)──│
           │      └─*──┘  └─-──┬─mm─┬─┘      │      │       │      └─*──┘  └─-──┬─mm─┬─┘      │      │
           │                   └─*──┘        │      │       │                   └─*──┘        │      │
           └──────────────────────────────────┘      └───────└──────────────────────────────────┘      │
►──┬──────────────────────────────────┬──┬──────────────────────────────────┬──►◄
   │┤ Selection limiting keywords ├───┘  │┤ Display limiting keywords ├───┘
```

Display limiting keywords:

```
├──┬──────────┬──────────────────────────────────────────────────────────────────────────┤
   └─,UNIT────┘
```

Selection limiting keywords:

```
├──┬──────────────────────────────────────────────────────────────────────────────────────┤
   └─,──┬─────┬──UNIT──┬─=──┬──unit──┘
        └─/───┘        ├─^=─┤
                       ├─>──┤
                       └─<──┘
```

Parameters

nnmm
Specifies the 1 to 4 character numeric subscript (1-32767) defining the line(s) affected by this command.

n Specifies the subscript (1-7) defining the SYSOUT receiver(s) that are affected by this command.

STATUS[=ACTIVE|DRAINED|DRAINING|HALTED| INACTIVE|STARING]
Displays information about JES2-managed devices. The following types of status can be displayed:

Type **Meaning**

ACTIVE
JES2 is using the device for job processing and will continue to do as long as jobs are both available and eligible for the device.

DRAINED
JES2 does not use the device until you start it with a $S command.

DRAINING
JES2 is using the device to process jobs, but will stop using this device once the current function has completed.

HALTED
JES2 has either requested operator assistance or an operator has entered the $Z command to halt the device. To start the device, you must enter a $S command.

INACTIVE
JES2 is not using the device, but would do so if a job were both available and eligible for the device.

STARTING
The device is being started. Applies to FSS-owned devices only.

UNIT={SNA|devnum|/devnum}
Displays a 4-digit hexadecimal device number for a binary synchronous communication (BSC) line. You can specify wildcards on this parameter. See “Using Wildcards” on page 93 for additional information.

Device numbers can be specified by any of the following formats:

```
UNIT=ddd
UNIT=dddd
UNIT=/ddd
UNIT=/dddd
```

where ddd and dddd represent the device numbers.

A slash (/) can optionally precede the device number (for compatibility with other commands that require a slash to denote a 4-digit device number).

Specify UNIT=SNA to obtain information about a systems network architecture (SNA) line.

Authority Required

This command requires **display** authority. The description of the $T RDRnn command explains how to ensure the proper MVS system command group authority is assigned. The $T INTRDR command sets the command authority for internal readers.

This command requires **read** security access authority. For a description of assigning command input authority, see *z/OS JES2 Initialization and Tuning Guide*.

Scope

Single Member. The response to this command will be a display of information about this member only. You might want to use this command to get information about all members in the MAS. To do so, you can use the MVS ROUTE *ALL command to issue this command to all active members (if the JES2 command character is the same on all members). See *z/OS MVS System Commands* for more information on using the ROUTE *ALL command.

Messages

The $HASP603 message displays information about the specified SYSOUT receiver.

Example

```
1  $dl15.sr1,status

  $HASP603 L15.SR1   STATUS=INACTIVE
```

Because the command specifies the STATUS parameter only, JES2 displays only the status of SYSOUT receiver 1 on line 15. You can filter on the UNIT parameter as well.

$D L(nnnn).ST(n) - Display SYSOUT Transmitter Status

Function

To display information about the indicated SYSOUT line(s) and transmitter.

This command has parameters you can use as a filtering technique to limit the type of information to search, or the amount of information to display. See “Using filtering to control and display information” on page 99 for additional information.

One or more parameters on this command accepts wildcards. Parameter descriptions will note that.

Syntax

```
►►──$D──L──┬─nn──┬──┬──┬──┬──┬──┬──┬──┬──┬──┬──┬──┬──┬──┬──┬──┬──┬──┬──┬──┬──.ST──┬─nn──┬──┬──┬──┬──┬──┬──┬──┬──┬──┬──┬──┬──┬──┬──┬──┬──┬──┬──┬──►
           │     │  ┌─────────────────────────────────────────────────────────────┐  │     │  ┌─────────────────────────────────────────────────────────────┐  │
           │     │  │                                                             │  │     │  │                                                             │  │
           │     │  │                                                             │  │     │  │                                                             │  │
           │     │  │                                                             │  │     │  │                                                             │
```

PLIM
Displays the limits (in pages) for SYSOUT data sets that the SYSOUT transmitter will select. This number applies to the total pages of all non-spun output in the job or to individual spun SYSOUT data sets in a job.

STATUS[=ACTIVE|DRAINED|DRAINING|HALTED| INACTIVE|STARTING]
Displays information about JES2-managed devices. The following types of status can be displayed:

Type **Meaning**

ACTIVE
JES2 is using the device for job processing and will continue to do so as long as jobs are both available and eligible for the device.

DRAINED
JES2 does not use the device until you start it with a $S command.

DRAINING
JES2 is using the device to process jobs, but will stop using this device when the current job processing completes.

HALTED
JES2 has either requested operator assistance or an operator has entered the $Z command to halt the device. To start the device, you must enter a $S command.

INACTIVE
JES2 is not using the device but would do so if a job were both available and eligible for the device.

STARTING
The device is being started. Applies to FSS-owned devices only.

UNIT={SNA|devnum|/devnum}
Displays a 4-digit hexadecimal device number for a binary synchronous communication (BSC) line. You can also specify wildcards on this parameter. See “Using Wildcards” on page 93 for additoinal information.

Device numbers can be specified by any of the following formats:

```
UNIT=ddd
UNIT=dddd
UNIT=/ddd
UNIT=/dddd
```

where ddd and dddd represent the device numbers.

A slash (/) can optionally precede the device number (for compatibility with other commands that require a slash to denote a 4-digit device number).

Specify UNIT=SNA to obtain information about a systems network architecture (SNA) line.

WS
Displays work selection criteria for this line SYSOUT transmitter.

Authority Required

This command requires **display** authority. The description of the $T RDRnn command explains how to ensure the proper MVS system command group authority is assigned. The $T INTRDR command sets the command authority for internal readers.

This command requires **read** security access authority. For a description of assigning command input authority, see *z/OS JES2 Initialization and Tuning Guide*.

Scope

Single Member. The response to this command will be a display of information about this member only. You might want to use this command to get information about all members in the MAS. To do so, you can use the MVS ROUTE *ALL command to issue this command to all active members (if the JES2 command character is the same on all members). See *z/OS MVS System Commands* for more information on using the ROUTE *ALL command.

Messages

The $HASP603 message displays information about the specified SYSOUT transmitter.

Example

```
1  $dl3.st1

$HASP603 L3.ST1    UNIT=SNA,STATUS=DRAINED,LIMIT=(46,46),PLIM=(
$HASP603           84,84),WS=(LIM/)
```

JES2 displays information about SYSOUT transmitter 1 at line 3.

$D LINE(nnnn) - Display a Line

Function

To display the characteristics of a line.

This command has parameters you can use as a filtering technique to limit the type of information to search, or the amount of information to display. See “Using filtering to control and display information” on page 99 for additional information. One or more parameters on this command accepts wildcards. Parameter descriptions will note that.

Syntax

```
►►─$D─┬─LINE─┬─┬──────────────────────────────────────────┬─┬──────────────────────────────────────────►
      └─LNE──┘ │ nnnn─┬──────────┬──────────────────────┬ │ │ Selection limiting keywords ├─┘
               │      └─-─┬─nnnn─┬─┘                      │ │
               │          └─*────┘                        │ │
               │   ┌──────────────────────────────────┐   │
               │   ▼                                  ,   │
               └─(─────┬─nnnn─┬──┬──────────┬──────────)─┘
                       └─*────┘  └─-─┬─nnnn─┬─┘
                                     └─*────┘

►─┬─────────────────────────────────────────────────────────────────────────────────────────────────►◄
  └─┤ Display limiting keywords ├─┘
```

Display limiting keywords:

```
├─┬──────────┬─┬─────────┬─┬──────────┬─┬─────────┬─┬──────────┬─┬─────────┬─┬─────────┬──────────────►
  └─,AUTODISC─┘ └─,CODE───┘ └─,COMPRESS─┘ └─,Discon─┘ └─,DUPLEX─┘ └─,INTERFAC─┘ └─,JRNUM─┘

►─┬─────────┬─┬──────────┬─┬──────────┬─┬──────────┬─┬─────────┬─┬──────────┬─┬──────────┬──────────────►
  └─,JTNUM──┘ └─,LINECCHR─┘ └─,LOG────┘ └─,Password─┘ └─,REST───┘ └─,RMTSHARE─┘ └─,SESsions─┘

►─┬─────────┬─┬─────────┬─┬─────────┬─┬─────────┬──────────────────────────────────────────────────►
  └─,SPEED──┘ └─,SPIN───┘ └─,SRNUM──┘ └─,STATUS─┘

►─┬─────────┬─┬──────────┬─┬──────────┬─┬─────────┬──────────────────────────────────────────────────┤
  └─,STNUM──┘ └─,TRaceio─┘ └─,TRANSPAR─┘ └─,UNIT───┘
```

Selection limiting keywords:

```
├─┬─────────────────────────────────────┬─┬─────────────────────────────────────┬──────────────────────►
  └─,─┬─────┬─AUTODISC─┬─────┬─┬────┬─┘   └─,─┬─────┬─CODE───┬─────┬─┬────┬─┘
      └─/───┘          └─^=──┘ └No──┘         └─/───┘        └─^=──┘ └A───┘
                                 └Yes─┘                                └B───┘

►─┬─────────────────────────────────────┬─┬─────────────────────────────────────────────────────────►
  └─,─┬─────┬─COMPRESS─┬─────┬─┬────┬─┘   └─,─┬─────┬─Discon─┬─────┬─┬─────────────┬─┘
      └─/───┘          └─^=──┘ └No──┘         └─/───┘        └─^=──┘ ├─I───────────┤
                                 └Yes─┘                                ├─INTERRUPT───┤
                                                                       ├─No──────────┤
                                                                       ├─Q───────────┤
                                                                       └─QUIESCE─────┘

►─┬─────────────────────────────────────┬─┬─────────────────────────────────────┬─┬─────────────────────┬─┬──────────┬─┬──────────┬─┬──
```

$D LINE(nnnn)

```
►──┬──────────────────────────────────────────────────────────────────────────────────────────────────────────────────────────►
   │ ┌──────────────────────────────────────────────────────────────────────────────────────────────────────────────────────┐
   └─┼─,──┬──/──┬──JTNUM──┬──=──┬──n──┬──┼─,──┬──/──┬──LINECCHR──┬──=──┬──EBCDIC──┬──┼─,──┬──/──┬──LOG──┬──=──┬──No──┬──┼
     │   │     │         │  ^=  │     │  │    │     │            │  ^=  │ USASCII  │  │    │     │       │  ^=  │ Yes  │  │
     │   │     │         │  >   │     │  │    │     │            │      │          │  │    │     │       │      │      │  │
     │   │     │         │  <   │     │  │    │     │            │      │          │  │    │     │       │      │      │  │
     │   │     │         │      
```

NO
The line is not to be disconnected.

DUPLEX[=FULL|HALF]
Displays whether this is a half-duplex or full-duplex line.

INTERFAC[=A|B]
Displays the BSC adapter interface for this line. **A** refers to the first interface in a BSC adapter; **B** refers to the second, which has the dual-communications interface feature.

JRNUM[=n|DEFAULT]
Displays the number (0-7) of network job receivers to be associated with this NJE line. The value of n is an integer that specifies the maximum number of input job streams allowed to be concurrently active on this line.

JTNUM[=n|DEFAULT]
Displays the number (0-7) of network job transmitters to be associated with this NJE line. The value of n is an integer that specifies the maximum number of output job streams allowed to be concurrently active on this line.

LINECCHR[=EBCDIC|USASCII]
Displays how the adapter is configured.

EBCDIC
The BSC adapter is configured for EBCDIC line-control characters.

USASCII
The BSC adapter is configured for ASCII line-control characters.

LOG[=No|Yes]
Displays whether or not JES2 is to monitor the specified line for channel-end completions (BSC lines) or SNA events (SNA lines).

Password
Displays the security password used to reject unauthorized terminals attempting to use the specified line.

REST[=nnnn]
Displays an integer (0-2000) that represents the resistance rating of the line as viewed by the installation management and coordinated with other installations.

RMTSHARE[=NO|YES|N/A]
Displays whether the line is allowed to be dedicated by specifying it on the LINE= parameter of a $ADD RMT(nnnn) command or a $T RMT(nnnn) command. This parameter is displayed for both BSC and SNA lines.

YES
Displays that this line can be shared. That is, this line is:
- A SNA line
- Not dedicated to any RJE workstation or
- Dedicated to one or more BSC RJE workstations with SHARABLE=YES specified on the RMT(nnnn) definition.

NO
Displays that this line cannot be shared. That is, this line is dedicated to one BSC RJE workstation with SHARABLE=NO specified on the RMT(nnnn) definition.

N/A
Displays that this line is not available.

SESsions
Displays the VTAM application interfaces and their corresponding status associated with this SNA line.

SPEED[=HIGH|LOW]
Displays whether this is a high-speed (greater than 9600 bits per second) or low-speed line.

Note: This parameter is applicable only to 360/20 sub-models 2 and 4.

SRNUM[=n|DEFAULT]
Displays the number (0-7) of network SYSOUT receivers to be associated with this NJE line. The value of n is an integer which specifies the maximum number of SYSOUT receiver streams allowed to be concurrently active on this line.

STATUS[=ACTIVE|DRAINED|DRAINING|INACTIVE |SIGNON/AWAITING-MAS(*x*)|SIGNON/AWAITING-*c*]
Displays the current status of the device. The following types of status can be displayed:

Type Meaning

ACTIVE
JES2 is using the device for job processing and will continue to do so as long as jobs are both available and eligible for the device.

DRAINED
JES2 does not use the device until you start it with a $S command.

DRAINING
JES2 is using the device to process jobs, but will stop using this device once the current function has completed.

INACTIVE
JES2 is not using the device, but would do so if a job were both available and eligible for the device.

SIGNON/AWAITING-MAS(*x*)
The device signing on is waiting for responses from one or more MAS members. In the message, *x* can be the member name, or a list of member names, from which a response is required.

SIGNON/AWAITING-*c*
The device signing on is waiting for an NCC record from the other end of the connection. In the message, *c* is the NCC record type (J, K, or L) for which the sign-on is waiting.

STNUM=stnum
Displays the number (0-7) of network SYSOUT transmitters which will be associated with this NJE line. The value of n is an integer which specifies the maximum number of SYSOUT transmitter streams allowed to be concurrently active on this line.

TRaceio[=No|Yes]
Displays whether or not I/O operations on the specified line are to be traced.

TRANSPAR[=No|Yes]
Displays whether or not the text transparency feature of the BSC adapter is present on this line.

UNIT[=devnum|/devnum|SNA]
Displays a 4-digit hexadecimal device number for a binary synchronous

communication (BSC) line. You can specify wildcards on this parameter. See “Using Wildcards” on page 93 for additional information.

Device numbers can be specified by any of the following formats:

```
UNIT=ddd
UNIT=dddd
UNIT=/ddd
UNIT=/dddd
```

where ddd and dddd represent the device numbers.

A slash (/) can optionally precede the device number (for compatibility with other commands that require a slash to denote a 4-digit device number).

Specify UNIT=SNA to obtain information about a systems network architecture (SNA) line.

Authority Required

This command requires **display** authority. The description of the $T RDRnn command explains how to ensure the proper MVS system command group authority is assigned.

This command requires **read** security access authority. For a description of assigning command input authority, see *z/OS JES2 Initialization and Tuning Guide*.

Scope

Single Member. The response to this command will be a display of information about this member only. You might want to use this command to get information about all members in the MAS. To do so, you can use the MVS ROUTE *ALL command to issue this command to all active members (if the JES2 command character is the same on all members). See *z/OS MVS System Commands* for more information on using the ROUTE *ALL command.

Messages

The $HASP880 message displays the status of the specified lines and their current characteristics.

Examples

1 `$d line(*),autodisc=y,transpar=y`

```
$HASP880 LINE2     UNIT=0023,STATUS=DRAINED,AUTODISC=YES,
$HASP880           CODE=A,COMPRESS=YES,DUPLEX=HALF,INTERFAC=A,
$HASP880           LINECCHR=EBCDIC,LOG=NO,PASSWORD=(NOTSET),
$HASP880           REST=0,RMTSHARE=YES,SPEED=LOW,TRACEIO=NO,
$HASP880           TRANSPAR=YES,JRNUM=DEFAULT,JTNUM=DEFAULT,
$HASP880           SRNUM=DEFAULT,STNUM=DEFAULT

$HASP880 LINE8     UNIT=0020,STATUS=DRAINED/RMT5,AUTODISC=YES,
$HASP880           CODE=A,COMPRESS=YES,DUPLEX=HALF,INTERFAC=A,
$HASP880           LINECCHR=EBCDIC,LOG=NO,PASSWORD=(NOTSET),
$HASP880           REST=0,RMTSHARE=NO,SPEED=LOW,TRACEIO=NO,
$HASP880           TRANSPAR=YES,JRNUM=DEFAULT,JTNUM=DEFAULT,
$HASP880           SRNUM=DEFAULT,STNUM=DEFAULT
 :
```

This command displays all lines that JES2 automatically disconnects from the RJE workstation when the local modem disconnects and that have the BSC adapter text transparency feature.

2 `$d line(*),rmtshare=y`

```
$HASP880 LINE1     UNIT=0022,STATUS=DRAINED,AUTODISC=YES,CODE=A,
$HASP880           COMPRESS=YES,DUPLEX=HALF,INTERFAC=A,
$HASP880           LINECCHR=EBCDIC,LOG=NO,PASSWORD=(NOTSET),
$HASP880           REST=0,RMTSHARE=YES,SPEED=LOW,TRACEIO=NO,
$HASP880           TRANSPAR=YES,JRNUM=DEFAULT,JTNUM=DEFAULT,
$HASP880           SRNUM=DEFAULT,STNUM=DEFAULT
 :
```

This command displays all lines that can be shared by an RJE workstation.

$D LOADmod(jxxxxxxx) - Display Load Module Information

Function

To display information that would be useful for diagnosing JES2 problems. Use this command to get the virtual address where a load module has been loaded in storage, exit routines included in the load module, its length, the RMODE, and the area of storage where the load module is located.

This command has parameters you can use as a filtering technique to limit the type of information to search, or the amount of information to display. See “Using filtering to control and display information” on page 99 for additional information.

One or more parameters on this command accepts wildcards. Parameter descriptions will note that.

Syntax

```
►►──$D──LOADmod──┬──────────────────────────────┬──┬──────────────────────────────┬──►
                 │ 'jxxxxxxx'                   │  │ Selection limiting keywords  │
                 │   ┌──────────────────────┐   │  └──────────────────────────────┘
                 │   ▼ ,                    │   │
                 └──(────jxxxxxxx──────────)───┘
                        └─'jxxxxxxx'─┘

►──┬──────────────────────────────┬──────────────────────────────────────────────►◄
   │ Display limiting keywords    │
   └──────────────────────────────┘
```

Display limiting keywords:

```
├──┬──────────┬──┬──────────┬──┬──────────┬──┬──────────┬──┬──────────┬──┬──────────┬──┤
   │ ,ADDRess │  │ ,LENgth  │  │ ,RMODE   │  │ ,ROUtines│  │ ,SPLevel │  │ ,STORage │  │ ,TABles  │
   └──────────┘  └──────────┘  └──────────┘  └──────────┘  └──────────┘  └──────────┘  └──────────┘
```

Selection limiting keywords:

```
├──┬──────────────────────────────────────────┬──┬──────────────────────────────────────────┬──►
   │ ,──┬──┬──ADDRess──┬──┬──┬──address──┬──┬  │ ,──┬──┬──LENgth──┬──┬──┬──length──┬──┬  │
   │    │  │ /  │      │  =  │ ^=  │     │  │  │    │  │ /  │      │  =  │ ^=  │     │  │  │
   │    │  │    │      │     │ >   │     │  │  │    │  │    │      │     │ >   │     │  │  │
   │    │  │    │      │     │ <   │     │  │  │    │  │    │      │     │ <   │     │  │  │
   └────┴──┴────┴──────┴─────┴─────┴─────┴──┴  └────┴──┴────┴──────┴─────┴─────┴─────┴──┴  └──┘

►──┬──────────────────────────────────────────┬──┬──────────────────────────────────────────┤
   │ ,──┬──┬──RMODE──┬──┬──┬──ANY──┬──┬  │ ,──┬──┬──SPLevel──┬──┬──┬──CHECK────┬──┬  │
   │    │  │ /  │    │  =  │ ^=  │ 24  │  │    │  │ /  │      │  =  │ ^=  │ NOCHECK │  │  │
   └────┴──┴────┴────┴─────┴─────┴─────┴──┴  └────┴──┴────┴──────┴─────┴─────┴─────────┴──┴  └──┘

►──┬──────────────────────────────────────────┬──────────────────────────────────────────┤
   │ ,──┬──┬──STORage──┬──┬──┬──CSA────┬──┬  │
   │    │  │ /  │      │  =  │ ^=  │ LPA     │  │
   │    │  │    │      │     │     │ PRIVATE │  │
   │    │  │    │      │     │     │ PVT     │  │
   └────┴──┴────┴──────┴─────┴─────┴─────────┴──┴  └──┘
```

Parameters

LOADmod

Specifies the JES2 load module name for which information is to be displayed. Specify the load module name (for example, HASCLINK) to obtain specific load module information, or an asterisk (*) to obtain information for **all** load

modules. You can also specify wildcards for the load module name. See “Using Wildcards” on page 93 for additional information. The following load modules cannot be displayed:

- HASPFSSM
- HASJES20
- Load modules beginning with the characters HASM

ADDRess=address
Displays the hexadecimal address of the load module in storage.

LENgth=length
Displays the load module’s exact hexadecimal length.

RMODE[=24|ANY]
Displays the link-edit attributes of the load module. Optionally, you can specify one of the following keywords to display load modules that reside in a particular area:

Value	Meaning
24	Display only those load modules that reside below 16 megabytes of virtual storage.
ANY	Display only those load modules that reside above 16 megabytes of virtual storage.

ROUtines
Displays the routines that are defined using the $ENTRY macros in a module. These routines are available for use via the EXIT(nnn) initialization statement.

Only routine names in installation-provided modules or in IBM-provided sample exit modules will be included.

SPLevel[=CHECK|NOCHECK]
Displays the value the module assigned to the SPLEVEL= parameter on the $MODULE macro. Optionally, you can display only those modules that have assigned a specific value to the $MODULE SPLEVEL= parameter by coding one of the following keywords:

Value	Meaning
CHECK	Display only those modules that specified CHECK on the $MODULE SPLEVEL= parameter.
NOCHECK	Display only those modules that specified NOCHECK on the $MODULE SPLEVEL= parameter.

STORage[=CSA|LPA|PRIVATE|PVT]
Displays the type of storage in which the load module resides. Optionally, you can specify an area of storage.

Code one of the following keywords:

Value	Meaning
CSA	Display only those load modules that are loaded into common storage.
LPA	Display only those load modules that are loaded into link pack area storage.
PRIVATE|PVT	Display only those load modules that are loaded into the private storage of the JES2 address space.

TABles
Displays any DYNAMIC tables which are defined in this module, along with the type of table.

Authority Required

This command requires **display** authority. The description of the $T RDRnn command explains how to ensure the proper MVS system command group authority is assigned.

This command requires **read** security access authority. For a description of assigning command input authority, see *z/OS JES2 Initialization and Tuning Guide*.

Scope

Single Member. The response to this command will be a display of information about this member only. You might want to use this command to get information about all members in the MAS. To do so, you can use the MVS ROUTE *ALL command to issue this command to all active members (if the JES2 command character is the same on all members). See *z/OS MVS System Commands* for more information on using the ROUTE *ALL command.

Messages

The $HASP819 message displays the current address, length, routines, RMODE, SPLEVEL and storage information for the specified load modules.

Examples

1 `$dloadmod(hastx24)`

```
$HASP819 LOADMOD(HASTX24)   ADDRESS=03343678,LENGTH=000988,
$HASP819                    ROUTINES=(FIXMAP,ISSI256),RMODE=ANY,
$HASP819                    SPLEVEL=CHECK,STORAGE=PVT
```

This displays the characteristics of HASTX24.

2 `$dloadmod(*),rmode,storage=pvt`

```
$HASP819 LOADMOD(HASTX24)   RMODE=ANY
$HASP819 LOADMOD(HASTX5)    RMODE=ANY
```

This command displays the RMODE for all load modules in private storage.

$D LOGON - Display the Status of JES2/VTAM Interface(s) and their Characteristics

Function

To display the status of the specified JES2/VTAM interface(s) and their current characteristics.

Syntax

```
►►─$D──┬─LGN──────┬──┬──────────────────────────────────────────────┬──┬─ Selection limiting keywords ─┬──►
       └─LOGON────┘  │ ┌─────────────────────────────────────────┐  │  │                               │
                     │ │                                         │  │  │                               │
                     │ │   ┌──────────────────────────────────┐  │  │  │                               │
                     │ │   ▼                                  │  │  │  │                               │
                     │ │   ┌─n─┬─────┬──────────────────────┐  │  │  │                               │
                     │ │   │   │     │                      │  │  │  │                               │
                     │ │   │   │     │  ┌─────┬─────────────┐  │  │  │                               │
                     │ │   │   │     │  │     │             │  │  │  │                               │
                     │ │   │   │     │  │     │  ┌─n─┬─────┐  │  │  │                               │
                     │ │   │   │     │  │     │  │   │     │
```

SESsions
Displays the VTAM application interfaces and their corresponding status associated with this SNA line.

STATUS[=ACTIVE|DRAINED|DRAINING|INACTIVE]
Displays the current status of the device. The following types of status can be displayed:

Type	Meaning
ACTIVE	JES2 is using the device for job processing and will continue to do so as long as jobs are both available and eligible for the device.
DRAINED	JES2 does not use the device until you start it with a $S command.
DRAINING	JES2 is using the device to process jobs, but will stop using this device once the current function has completed.
INACTIVE	JES2 is not using the device, but would do so if a job were both available and eligible for the device.

TRaceio={Yes|No}
Specifies whether (Yes) or not (No) JES2 will trace channel-end completions for logons.

Authority Required

This command requires **display** authority. The description of the $T RDRnn command explains how to ensure the proper MVS system command group authority is assigned.

This command requires **read** security access authority. For a description of assigning command input authority, see *z/OS JES2 Initialization and Tuning Guide*.

Scope

Single Member. The response to this command will be a display of information about this member only.

Messages

The individual parameter descriptions list the resulting messages.

Example

```
1  $D LOGON
           $d logon(*)
           $HASP881 LOGON20
 $HASP881 LOGON20    APPLID=POK,STATUS=DRAINED,LOG=NO,
 $HASP881            PASSWORD=(NOTSET),SESSIONS=,TRACEIO=NO
           $HASP881 LOGON998
 $HASP881 LOGON998   APPLID=JES2,STATUS=DRAINED,LOG=NO,
 $HASP881            PASSWORD=(NOTSET),SESSIONS=,TRACEIO=NO
           $HASP881 LOGON999
 $HASP881 LOGON999   APPLID=JES2N1,STATUS=DRAINED,LOG=NO,
 $HASP881            PASSWORD=(NOTSET),SESSIONS=,TRACEIO=NO
```

The $HASP881 message indicates logon characteristics.

$D M - Send a Message

Function

To send a message to a remote workstation operator, a console operator on another multi-access spool (MAS) member, or to a console or remote workstation operator at another node.

Note that an asterisk (*) can be used within a range to indicate the highest-numbered RJE workstation (Rnnnn-*), node (Nnnnn-*), or JES2 member (Mn-*) available.

Syntax

```
►►──$D──M──┬──────────┬──┬──────────────────────────────┬──┬──────────────────────────────┬──►
           ├─job_id───┤  ├─Rnnnn(-nnnn|-*)──────────────┤  └─,D=──┬─LOCAL|ANYLOCAL─┬─────┘
           └─'jobname'─┘  ├─Nnnnn(-nnnn|-*)──────────────┤         ├─Nnnnn|nodename─┤
                          ├─Mn(-n|-*)──────────────────┤         ├─destid─────────┤
                          ├─NnnnnRnnnn(-nnnn|-*)───────┤         ├─NnnnnRmmmm─────┤
                          ├─,'message'... ─────────────┤         ├─Ummmm─────────┤
                          └─,...───────────────────────┘         ├─node.remote────┤
                                                                 ├─node.userid────┤
                                                                 ├─node.destid────┤
                                                                 ├─remote─────────┤
                                                                 ├─userid─────────┤
                                                                 └─node.*─────────┘

►──┬──────────────────────────────┬──────────────────────────────────────────────────────►◄
   └─,R=──┬─LOCAL|ANYLOCAL─┬──────┘
          ├─Nnnnn|nodename─┤
          ├─destid─────────┤
          ├─NnnnnRmmmm─────┤
          ├─Ummmm─────────┤
          ├─node.remote────┤
          ├─node.userid────┤
          ├─node.destid────┤
          ├─remote─────────┤
          ├─userid─────────┤
          └─node.*─────────┘
```

Parameters

M JES2 sends a message to the specified destination.

job_id
A “job” can actually be a batch job, started task (STC), or time-sharing user (TSU). A job identifier (jobid) is a 1 to 8 character string specified as “JOBnnnnn”, “STCnnnnn”, and “TSUnnnnn”, respectively.

Specify job_id in one of the following ways:

J|JOBn
The batch job whose job log receives the message.

S|STCn
The started task whose job log receives the message.

T|TSUn
The time-sharing user whose job log receives the message.

‘jobname’
The name of the job whose job log receives the message.

Rnnnn[-nnnn|-*]
The remote workstation or range of remote workstations on the local node to which the message is sent.

Note: If R0 is entered, JES2 sends the message to the console with master level authority on the member processing the command. This is how the remote console operator typically sends a message to the system console operator.

Nnnnn[-nnnn|-*]
The node or range of nodes to which the message is sent.

Mn[-n|-*]
The multi-access spool member or range of members on this node to which the message is sent.

NnnnnMn[-n|-*]
The specific member or range of members on node nnnn to which the message is sent.

Only **this** node can be specified when using the range n-*.

NnnnnRnnnn[-nnnn|-*]
The remote workstation or range of remote workstations on node nnnn to which the message is sent.

Only **this** node can be specified when using the range n-*.

'message'
The message text that JES2 sends to the specified destination. If you do not enclose the message in apostrophes, JES2 compresses the message text by removing all blanks. If an apostrophe is desired within the message text, you must use double apostrophes.

D=
Specifies a destination for the message. The value for all routing numbers can range from 1 to 32767. Use parentheses if more than one route code is specified. For specification requirements, see "Route Codes" on page 92.

If this command originates from another node in the network and the D= operand does not specify a node (first-level destination), the receiving node defaults the first-level destination to the node where the command originated.

If this command is sent to another node in the network using the $N command, be aware that the receiving node will default the node (first-level destination) of the D= operand to the sending node. If another node is desired, specify a destination on the D= operand that will resolve to the desired node (first level destination) at the receiving node.

Note: NODENAME=REQUIRED on the DESTDEF initialization statement will cause JES2 to require that a userid be prefixed with a node name.

LOCAL|ANYLOCAL
Indicates that messages are sent to the local node.

Nnnnn|nodename
Indicates that messages are sent to the node(s) specified by the decimal node identifier or an EBCDIC nodename.

destid Indicates that messages are sent to the specified node(s). If destid is listed alone, it refers to both the node and the remote.

NnnnnRmmmm|node.remote|node.userid
Indicates that messages are sent to the remote Rmmmm at the node Nnnnn. Rmmmm can also be specified as RMmmmm or RMTmmmm.

Ummmm
Indicates that messages are sent to a special local routing.

node.destid
Indicates that messages are sent to a destination at the specified node. The destid refers to both the node and the remote.

remote
Indicates that messages are sent to a remote. Remote can be specified in any of the following ways:

LOCAL|ANYLOCAL
Indicates that messages are sent to the local node.

Rmmmm
Indicates that messages are sent to the specified remote.

destid Indicates that messages are sent to a destid referring to a remote.

userid Indicates sending messages to a valid TSO userid, or a user* (where * means all local, remote, special local unit, and userid output at the specified node).

For more information about specifying userids as remotes, refer to “Route Codes” on page 92.

node.*
Indicates sending messages to a nodename modified to the specified node name, but the remote node will remain the same.

R=
The remote workstation on the node specified in the D= parameter (which must precede this) to which the message is sent. If you use the R= parameter to specify a node, it must be the node specified in the D= parameter. You may specify any of the options available through the D= parameter.

Notes:

1. The R= parameter is not valid if the D= parameter specified is a nodal range.
2. NODENAME=REQUIRED on the DESTDEF initialization statement will cause JES2 to require that a userid be prefixed with a node name.

Authority Required

This command requires **display** authority. The description of the $T RDRnn command explains how to ensure the proper MVS system command group authority is assigned.

This command requires **read** security access authority. For a description of assigning command input authority, see *z/OS JES2 Initialization and Tuning Guide*.

Processing Considerations

- The specified batch job, STC, or TSU must be in execution, not awaiting execution or output.

- The specified message is not printed if the job's submitter specified that no job log was to be printed (NOLOG), or if the attributes specified at JES2 initialization for the job's execution class indicate that no job log is to be generated.
- Use the MVS SEND command to send a message directly to a time-sharing user's terminal.

Scope

MAS-Wide. You can issue this command from anywhere in the MAS and the command will be routed appropriately.

Messages

The $HASP001 message displays the operator console or remote terminal value, followed by the operator message.

Examples

1
```
$d m j29,'could not find your tape'

$HASP001 0,COULD NOT FIND YOUR TAPE
```

JES2 writes the message "COULD NOT FIND YOUR TAPE" on job 29's job log.

2
```
$d m 'stanley','next time please increase your output estimate'

$HASP001 0,NEXT TIME PLEASE INCREASE YOUR OUTPUT ESTIMATE
```

JES2 writes the message "NEXT TIME PLEASE INCREASE YOUR OUTPUT ESTIMATE" on the job log for the job whose name is STANLEY.

3
```
$d m n3r2-5, 'Jobs remaining after 5 PM will be purged.'

$HASP001 0,JOBS REMAINING AFTER 5 PM WILL BE PURGED
```

JES2 sends the message "JOBS REMAINING AFTER 5PM WILL BE PURGED" to remote workstations 2 through 5 on node 3.

4
```
$d m n4, 'Node 3 requesting network authority.'

$HASP001 0,NODE 3 REQUESTING NETWORK AUTHORITY
```

JES2 sends the message "NODE 3 REQUESTING NETWORK AUTHORITY" to the operator's console at node 4.

5
```
$D M N2M1-*,'JOBS REMAINING AFTER 5 PM WILL BE PURGED'

$HASP001 02   ,'JOBS REMAINING AFTER 5 PM WILL BE PURGED'
```

The command is issued from Node 2. JES2 sends the message "JOBS REMAINING AFTER 5PM WILL BE PURGED" to members, beginning with member 1 through the highest numbered member, on node 2.

$D MASDEF - Display the Multi-access Spool Environment

Function

To display multi-access spool definition and tuning parameters.

Syntax

```
►►──$D──MASDEF──┬──────────────────────────────────────────────────────────►
                │,──AUTOEMEM──┘ │,CKPTLOCK┘ │,COLDTIME┘ │,COLDVRSN┘ │,DORMANCY┘

►──┬──────────────────────────────────────────────────────────────────────►
   │,HOLD┘ │,LOCKOUT┘ │,──┬─OWNMEMB─┬─┘ │,QREBUILD┘ │,QUESHELD┘ │,RESTART┘ │,RSVHELD┘
                        └─OWNSID──┘

►──┬──────────────────────────────────────────────────────────────────────►◄
   │,SHARED┘ │,SYNCTOL┘ │,WARMTIME┘ │,XCFGRPNM┘
```

Parameters

AUTOEMEM
Displays the status of this JES2 MAS member's AUTOEMEM function. They can be:

ON This MAS member's jobs can be restarted.

OFF This MAS member's jobs cannot be reset automatically.

STARTING
This MAS member's jobs are in the process of turning AUTOEMEM on.

STOPPING
This MAS member's jobs are in the process of turning AUTOEMEM off.

CKPTLOCK
Displays whether or not message $HASP479 is issued during a cold or warm start of JES2. The value displayed will be one of the following:

INFORM
JES2 will not issue message $HASP479 during a cold or warm start of JES2 if:

- The checkpoint lock cannot be obtained, and
- The member ID of the member holding the lock is the same as the one being started.

Instead, JES2 issues message $HASP457 to indicate that the member has bypassed confirmation of the lock release.

ACTION
JES2 issues message $HASP479 in all cases.

COLDTIME
Displays the time of the cold start (yyyy.ddd,hh:mm:ss).

Scope: MAS-Wide.

COLDVRSN
Displays the version of JES2 that was cold started.

Scope: MAS-Wide.

DORMANCY
Displays the minimum and maximum time, in hundredths of seconds, that a member of the MAS must wait before it attempts to regain control of the checkpoint data set.

Scope: Single Member.

HOLD
Displays the minimum length of time, in hundredths of seconds, that a member of a multi-access spool configuration must maintain control of the checkpoint data set.

Scope: Single Member.

LOCKOUT
Displays the time interval, in hundredths of seconds, from the first denied request for the checkpoint data set by a member of a multi-access spool configuration to the time that the configuration assumes the member controlling the checkpoint data set is inoperative.

Scope: Single Member.

OWNMEMB|OWNSID
Displays the member name of this member.

Scope: Single Member.

QREBUILD
Displays the count of times that the job queue has been rebuilt since the last all-member warm start or cold start.

Scope: MAS-Wide.

QUESHELD
This information is displayed if this JES2 member has control of, and is actively updating, the checkpoint data set.

Scope: Single Member.

RESTART
Displays whether (Yes) or not (No) a JES2 MAS member can make the jobs on a failed member eligible for restart.

Notes:

1. If the job is registered with the automatic restart manager, the automatic restart manager restarts jobs regardless of the settings of the AUTOEMEM= and RESTART= parameters.
2. If a JES2 member has been identified as the target of an automatic reconfiguration facility takeover, specify RESTART=NO. For more information about the Processor Resource/Systems Manager(PR/SM) environment to which this applies, see *z/OS MVS Recovery and Reconfiguration Guide*, SA22-7623 and *z/OS MVS Setting Up a Sysplex*, SA22-7625

Scope: Single Member.

RSVHELD
This information is displayed if this JES2 member has control of, but is not actively updating, the checkpoint data set.

Scope: Single Member.

SHARED
Displays whether the direct access volumes being used in the configuration for spool and checkpoint devices are to be marked as shared (CHECK) or non-shared (NOCHECK).

Scope: Single Member.

SYNCTOL
Displays the time interval, in seconds, that must expire before a JES2 member in a multi-access spool configuration is assumed to be inoperative.

Scope: Single Member.

WARMTIME
Displays the time of the last all-member warm start (yyyy.ddd,hh:mm:ss).

Scope: MAS-Wide.

XCFGRPNM
Displays the multi-access spool configuration's XCF groupname. The default is the local node name. The node name is defined on the NAME= parameter of the local NODE(nnnn) initialization statement.

Scope: MAS-Wide.

Authority Required

This command requires **display** authority. The description of the $T RDRnn command explains how to ensure the proper MVS system command group authority is assigned.

This command requires **read** security access authority. For a description of assigning command input authority, see *z/OS JES2 Initialization and Tuning Guide*.

Scope

The scope of this command varies by parameter. See the description of each parameter for its scope.

Some parameters on this command will display information about the entire MAS, while other parameters will display information about this member only.

You might want to use the parameters for this command to get information about all members of the MAS. If so, you can use the MVS ROUTE *ALL command to issue this command to all active members (if the JES2 command character is the same on all members). See *z/OS MVS System Commands* for more information on using the ROUTE *ALL command.

Messages

The $HASP843 message displays the current values of all the parameters.

Example

1 `$d masdef`

```
$HASP843 MASDEF  OWNMEMB=IBM1,AUTOEMEM=OFF,CKPTLOCK=ACTION,
$HASP843         COLDTIME=(1994.192,12:37:29),COLDVRSN=SP 5.2.0,
$HASP843         DORMANCY=(100,500),HOLD=30,LOCKOUT=1000,
$HASP843         RESTART=NO,SHARED=NOCHECK,SYNCTOL=120,
$HASP843         XCFGRPNM=POK,QREBUILD=0
```

JES2 displays information about the MAS environment.

$D MEMBer - Display Information about MAS Members

Function

To display information about members of a multi-access spool (MAS).

The information displayed for each member includes the member name and any of the following information:
- The date and time the member was started.
- The member that is restarting this member's work.
- The status of the member.
- The name of the MVS system image of the member.
- The time the member last accessed the checkpoint.
- The version of JES2 running on the member.

This command has parameters you can use as a filtering technique to limit the type of information to search, or the amount of information to display. See "Using filtering to control and display information" on page 99 for additional information.

One or more parameters on this command accepts wildcards. Parameter descriptions will note that.

Syntax

```
►►──$D──MEMBer──┬──────────────────────────────────────────────────────────────────────────────────►
                │ nn ──┬──────────┬──
                │      └─── mm ───┤
                │      └─── * ────┘
                │ 'member' ──────────────────────────────────────────────────────────────────────────
                │ (──┬──────────┬──────────────────────────────────────────────────────────────────)
                │    │ nn ──┬──────────┬──┬──────────┬──┬──────────────────────────────────────────┬
                │    │      └─── mm ───┤  │ member ──┬──────────────────────────────────────────┬
                │    │      └─── * ────┘  │ 'member' ┤  │ ──┬──────────────────────────────────┬
                │    │ * ──────────────────┘ * ────────┘  │ ──┬──────────────────────────────┬
                │    │                                    │ ──┬──────────────────────────┬
                │    │                                    │ ──┬──────────────────────┬
                │    │                                    │ ──┬──────────────────┬
                │    │                                    │ ──┬──────────────┬
                │    │                                    │ ──┬──────────┬
                │    │                                    │ ──┬──────────┬
                │    │                                    │ ──┬──
```

```
►──┬──────────────────────────────────┬──┬──────────────────────────────────┬──
   │ ┌──────┐ SLEVEL ┌──┐ slevel │   │ ┌──────┐ SSNAME ┌──┐ ssname │
   └─┤ ,/   ├────────┤ =│────────┘   └─┤ ,/   ├────────┤ =│────────┘
     └──────┘        │^=│              └──────┘        │^=│
                     │ >│                              │ >│
                     │ <│                              │ <│

►──┬──────────────────────────────────┬──┬──────────────────────────────────┬──
   │ ┌──────┐ STATUS ┌──┐ WAITING-WARMSTART-CLEANUP │   │ ┌──────┐ SYSNAME ┌──┐ sysname │
   └─┤ ,/   ├────────┤ =│──┬────────────────────────┘   └─┤ ,/   ├────────┤ =│────────┘
     └──────┘        │^=│  ├─ACTIVE──────────────────────┐ └──────┘        │^=│
                     └──┘  ├─DEFINED─────────────────────┤                 │ >│
                           ├─DORMANT─────────────────────┤                 │ <│
                           ├─DOWN────────────────────────┤
                           ├─DRAINED─────────────────────┤
                           ├─FAILED──────────────────────┤
                           ├─INITIALIZING────────────────┤
                           ├─INUSE───────────────────────┤
                           ├─JESXCF-FAILED───────────────┤
                           ├─JES2-FAILED─────────────────┤
                           ├─MVS-GONE────────────────────┤
                           ├─TERMINATED──────────────────┤
                           ├─TERMINATING─────────────────┤
                           ├─UNDEFINED───────────────────┤
                           └─UNDEFINED-PENDING───────────┘

►──┬──────────────────────────────────┬──────────────────────────────────────┤
   │ ┌──────┐ VERSION ┌──┐ version │
   └─┤ ,/   ├─────────┤ =│─────────┘
     └──────┘         │^=│
                      │ >│
                      │ <│
```

Parameters

nn The numeric value (1-32), range of values.

member
The 1 to 4 alphanumeric or special ($, #, or @) character name of the MAS member to be displayed. Specify the member number or the member name to obtain information on a specific member, or an asterisk (*) to obtain information for all members of the MAS.

You can also specify wildcards on this parameter. See “Using Wildcards” on page 93 for additional information.

BOSS[=No|Yes]
Displays the JES2 WLM representative for the MAS on this MVS image. The primary JES2 will be the BOSS if it’s active and it’s a part of the MAS, otherwise, the first JES2 subsystem defined for the MAS (which is active) is declared the BOSS.

COMMAND
Specifies that any commands ($P or $P XEQ) which have been issued on this member should be listed.

IND[=No|Yes]
Specifies that the independent mode status of the member is to be displayed. This is only displayed if the member is defined.

LASTART
Specifies that the type and time of the last start is to be displayed. This value is not displayed if the member has never been started.

STARTYPE
The type is one of the following:
- COLD
- HOT
- QUICK

- FORMAT
- ALL-MEMBER-WARM
- SINGLE-MEMBER-WARM

STARTIME
The time is GMT time, and is in the format of yyyy.ddd,hh:mm:ss.

NAME[=name]
Specifies the 1 to 8 alphanumeric or special ($, #, or @) character name of the member to be displayed.

You can also specify wildcards on this parameter. See “Using Wildcards” on page 93 for additional information.

RESETBY
Requests the identity of the member (the member number) that is performing a $E MEMBER of this member. This is only displayed while the $E MEMBER is in progress.

SLEVEL[=slevel]
Specifies that the service level number of the member is to be displayed.

SSNAME[=ssname]
Displays the subsystem name used by this member.

STATUS[=ACTIVE|DEFINED|DORMANT|DOWN|DRAINED|FAILED|INITIALIZING|INUSE|JESXCF-FAILED|JES2-FAILED|MVS-GONE|TERMINATED|TERMINATING| UNDEFINED|UNDEFINED-PENDING|WAITING-WARMSTART-CLEANUP]
Specifies that the current status of the member is to be displayed. Valid keyword values for the STATUS parameter and their meanings are as follows:

ACTIVE
Displayed when the member that is up and running.

DEFINED
Displays only defined members.

Note: This parameter is only a filter. You can specify this status but DEFINED will not be displayed in the message.

DORMANT
Displayed when the member that is up and running but has not recently accessed the JES2 checkpoint.

DOWN
Displays only TERMINATED, DRAINED or FAILED members.

Note: This parameter is only a filter. You can specify this status but DOWN will not be displayed in the message.

DRAINED
Displayed when JES2 is no longer available and all work has been reset.

FAILED
Displays all members that have a status of JES2-FAILED, JESXCF-FAILED or MVS-GONE.

Note: This parameter is only a filter. You can specify this status but FAILED will not be displayed in the message.

INITIALIZING
Displayed when the member is in the process of initializing.

INUSE
Displays only ACTIVE, INITIALIZING, TERMINATING and DORMANT members.

Note: This parameter is only a filter. You can specify this status but INUSE will not be displayed in the message.

JESXCF-FAILED
Displayed when JES2 abends. Indicates that JESXCF is no longer available.

JES2-FAILED
Displayed when JES2 abends. Indicates that the address space is no longer available.

MVS-GONE
Displayed when the MVS system that JES2 was running on is no longer available and a $E MEMBER is required.

TERMINATED
Displayed after a $PJES2,TERM is issued. Specifies that JES2 is no longer available and a $E MEMBER is required.

TERMINATING
Displayed when JES2 is in the process of terminating.

UNDEFINED
Displayed when the member has not been defined through a MEMBER(n) initialization statement.

UNDEFINED-PENDING
Displayed when the member was previously defined through a MEMBER(n) initialization statement, but is in the process of having its definition deleted by another member in initialization.

WAITING-WARMSTART-CLEANUP
Display members for which warmstart processing has completed with some jobs still pending processing.

SYSNAME[=sysname]
Specifies that the system name of the MVS image of the member is to be displayed. You can also specify wildcards on this parameter. See “Using Wildcards” on page 93 for additional information.

The system name will not be displayed if it is equal to the member name (NAME=) or if the member is inactive.

TIME
Displays the last time (in GMT time) the member accessed the checkpoint. This is not displayed if the member is inactive or undefined.

VERSION[=version]
Indicates the version of the JES2 release that is running on this member.

Authority Required

This command requires **display** authority. The description of the $T RDRnn command explains how to ensure the proper MVS system command group authority is assigned.

This command requires **read** security access authority. For a description of assigning command input authority, see *z/OS JES2 Initialization and Tuning Guide*.

Scope

MAS-Wide. The response to this command will be a display of information about the requested member(s) only.

Messages

The $HASP673 message is issued in response to this command.

Examples

1 `$D MEMBER(2)`

```
$HASP673 MEMBER(2)   NAME=IBM2,STATUS=ACTIVE,IND=NO,
$HASP673             LASTART=(ALL-MEMBER-WARM,(1997.134,
$HASP673             12:54:30)),SYSNAME=SY1,
$HASP673             TIME=(1997.136,19:08:00.77),
$HASP673             VERSION=OS 2.4.0,SLEVEL=0,SSNAME=JES2,
$HASP673             BOSS=YES
```

This command displays information about MAS member 2.

2 `$D MEMBER(*), ind=no`

```
$HASP673           MEMBER(1)   NAME=PSU2,STATUS=DRAINED,IND=NO
$HASP673 MEMBER(2)   NAME=IBM2,STATUS=ACTIVE,IND=NO,
$HASP673             LASTART=(ALL-MEMBER-WARM,(1994.235,
$HASP673             20:31:38)),SYSNAME=SY1,
$HASP673             TIME=(1994.235,20:32:02.41),
$HASP673             VERSION=SP 5.2.0
          $HASP673 MEMBER(3)   NAME=NIH2,STATUS=DRAINED,IND=NO
          $HASP673 MEMBER(4)   NAME=BCG2,STATUS=DRAINED,IND=NO
          $HASP673 MEMBER(5)   NAME=WFB2,STATUS=DRAINED,IND=NO
          $HASP673 MEMBER(6)   NAME=SY06,STATUS=DRAINED,IND=NO
          $HASP673 MEMBER(7)   NAME=SY07,STATUS=DRAINED,IND=NO
          $HASP673 MEMBER(8)   NAME=SY08,STATUS=DRAINED,IND=NO
⋮
```

This command displays information about all members not in independent mode.

$D MODule(jxxxxxxx) - Display Assembled Module Information

Function

Use this command to display information about JES2 assembly modules within JES2 load modules, in the JES2 address space or in common storage. These modules can be from IBM or installation-defined.

The information displayed for each module includes the module name and any of the following information:

- The storage address where the module is loaded and the module length.
- The date and time the module was assembled.
- The module's assembly environment.
- Any exit points defined within the module.
- Whether the module is a base module, a sample exit routine, or not part of the JES2 product.
- The number of the last APAR applied to the module.
- The hexadecimal length of the module.
- The name of the load module that contains the assembly module.
- The value that the module assigned to the SPLEVEL SET= parameter.
- The names of any exit routines that are included in the module.
- The SPLEVEL of the MVS macros used in the assembly of this module.

This information would be useful for diagnosing JES2 problems.

This command has parameters you can use as a filtering technique to limit the type of information to search, or the amount of information to display. See "Using filtering to control and display information" on page 99 for additional information.

One or more parameters on this command accepts wildcards. Parameter descriptions will note that.

Syntax

```
►►─$D─MODule─┬─'module'──────────────┬─┬─┤ Selection limiting keywords ├─┬──►
             │                       │ │                               │
             └─(─┬─module──────┬─)─┘ │                               │
                 │             │      │                               │
                 ↓ ,           │      │                               │
                 └─'module'────┘      │                               │
►─┬─┤ Display limiting keywords ├─┬──────────────────────────────────►◄
  │                               │
```

Display limiting keywords:

```
├─┬─,ADDRess─┬─┬─,ASSEMBLY─┬─┬─,ENViron─┬─┬─,EXITPTS─┬─┬─,FMID─┬─┬─,IBMJES2─┬─┬─,LASTapar─┬──►
  │          │ │           │ │          │ │          │ │       │ │          │ │           │
►─┬─,LASTPTF─┬─┬─,LENgth─┬─┬─,LOADmod─┬─┬─,LONG─┬─┬─,MACLevel─┬─┬─,ROUtines─┬─┬─,ROUTINES─┬──►
  │          │ │         │ │          │ │       │ │           │ │           │ │           │
►─┬─,SPLevel─┬─┬─,TABles─┬─┬─,UVERSION─┬─┬─,VERSION─┬─┤
  │          │ │         │ │           │ │          │
```

Selection limiting keywords:

```
├─┬─────────────
```

MIXED
Display only those modules that contain routines ($ENTRY macros) that are not all defined for the same environment. Having a module with routines defined for different environments is rare in IBM modules, and is not recommended in installation-defined modules.

SUBTASK
Display only those modules that are assembled for the JES2 address space subtask environment.

USER Display only those modules that are assembled for the multi-address-space user environment.

EXITPTS
Displays the exit points defined in the module. If the module being displayed issued the $EXIT macro, the display includes the exit points defined by that macro. An exit point is a number from 0 through 255. For example, if the module defined exit point 31, the display shows EXITPTS=(31).

If the module did not issue the $EXIT macro, the display shows **EXITPTS=( )**.

FMID
Displays the FMID of the release of JES2.

IBMJES2[=BASE|No|SAMPLE]
Displays the category of the module. The categories are: a base module in the JES2 product, a JES2-provided sample exit routine, or any other JES2 module that's not provided as part of the JES2 product.

You can specify this parameter without any keywords or you can specify a keyword to display only those modules that fall into one of the three module categories just mentioned.

The keyword values and their meanings are:

Value **Meaning**

BASE Limit the display to only base modules in the JES2 product.

No Limit the display to JES2 modules that are not base modules or JES2-provided sample exit routines.

SAMPLE
Limit the display to JES2-provided sample exit routines.

LASTapar[=lastapar]
Displays the last service that has been applied to a module. You can specify wildcards on this parameter. See "Using Wildcards" on page 93 for additional information.

If no service has been applied to a module, a value of NONE is displayed.

Optionally, you can specify a service number if you are requesting information about all modules last affected by that service. You can specify NONE to display information about all modules that have not been affected by service. The keyword values and their meanings are:

Value **Meaning**

aannnnn
Limit the display to only those modules that have APAR *lastapar* applied as their last APAR.

For non-IBM modules that contain a character constant with the label APARNUM, the display includes the value of the character constant. For non-IBM modules that do not contain this constant, the display includes the value of the &UVERS global variable defined in the $HASPGBL macro.

LASTPTF
Displays the latest PTF maintentance applied to this module.

LENgth=length
Displays the module hexadecimal length. The length that is displayed is the module's approximate length and is generally within 8 bytes of the actual module length.

LOADmod[=loadmod]
Displays the name of the load module that contains the module. You can specify a load module name if you are requesting information about all modules contained within that specific load module.

You can specify wildcards on this parameter. See "Using Wildcards" on page 93 for additional information.

LONG
Displays additional information.

MACLevel[=maclevel]
Displays the value the module assigned to the SET= parameter on the SPLEVEL macro. You can specify a numeric value to display only those modules that have assigned a specific value to the SPLEVEL SET= parameter.

The numerical values and their meanings are:

Value	Meaning
1	Display only those modules that specified 1 on the SET= parameter of the SPLEVEL macro.
2	Display only those modules that specified 2 on the SET= parameter of the SPLEVEL macro.
3	Display only those modules that specified 3 on the SET= parameter of the SPLEVEL macro.
4	Display only those modules that specified 4 on the SET= parameter of the SPLEVEL macro.

ROUtines
Displays the names of any EXIT(nnn) routines that are included in the load module. EXIT(nnn) routines are those routines named on the ROUTINE= parameter of the EXIT(nnn) initialization statement.

Only routine names in installation-provided modules or in IBM-provided sample exit modules will be included.

ROUTINES
Displays routines and their addresses within the module. Only routines defined via $ENTRY are displayed. When used as a filter, only the module containing the routine and the specified routine address (unless LONG is also specified) are displayed.

SPLevel[=CHECK|NOCHECK]
Displays the value the module assigned to the SPLEVEL= parameter on the $MODULE macro. Optionally, you can display only those modules that have assigned a specific value to the $MODULE SPLEVEL= parameter by coding one of the following keywords:

Value Meaning

CHECK
Display only those modules that specified CHECK on the $MODULE SPLEVEL= parameter.

NOCHECK
Display only those modules that specified NOCHECK on the $MODULE SPLEVEL= parameter.

TABles
Displays any DYNAMIC tables which are defined in this module along with the type of table.

UVERSION
Displays the user version of JES2 (LONG only).

VERSION
Displays the version of JES2 (LONG only).

Authority Required

This command requires **display** authority. The description of the $T RDRnn command explains how to ensure the proper MVS system command group authority is assigned.

This command requires **read** security access authority. For a description of assigning command input authority, see *z/OS JES2 Initialization and Tuning Guide*.

Scope

Single Member. The response to this command will be a display of information about this member only. You might want to use this command to get information about all members in the MAS. To do so, you can use the MVS ROUTE *ALL command to issue this command to all active members (if the JES2 command character is the same on all members). See *z/OS MVS System Commands* for more information on using the ROUTE *ALL command.

Messages

The $HASP468 message displays the current address and assembly information for the desired modules, and if applicable, the latest service.

Examples

1

```
$dmodule(haspnuc)

$HASP468 MODULE(HASPNUC)
$HASP468 MODULE(HASPNUC) ADDRESS=00006000,ASSEMBLY=(11/17/99,

$HASP468 18.07),ENVIRON=MIXED,EXITPTS=(7,21),
$HASP468 FMID=HJE6607,IBMJES2=BASE,
$HASP468 LASTAPAR=OW40627,LASTPTF=UW63110,
$HASP468 LENGTH=00A530,LOADMOD=HASJES20,
$HASP468 MACLEVEL=6,SPLEVEL=CHECK
```

JES2 displays the characteristics of HASPNUC in load module HASJES20.

2

```
$d module(haspira)

$HASP468      MODULE(HASPIRA) ADDR=00000000
```

JES2 displays the characteristics of HASPIRA in load module HASPINIT. However, if load module HASPINIT was not linked with load module HASJES20, the load module is no longer present. Therefore, the $HASP468 message cannot provide an address.

3

```
$dmodule,routines=$post

$HASP468 MODULE(HASPNUC)
$HASP468 MODULE(HASPNUC) ADDRESS=00006000,ASSEMBLY=(11/17/99,
$HASP468 18.07),ENVIRON=MIXED,EXITPTS=(7,21),
$HASP468 FMID=HJE6607,IBMJES2=BASE,
$HASP468 LASTAPAR=OW40627,LASTPTF=UW63110,
$HASP468 LENGTH=00A530,LOADMOD=HASJES20,
$HASP468 MACLEVEL=6,ROUTINES=($POST=00007EA8),
$HASP468 SPLEVEL=CHECK
```

JES2 displays the module containing the routine $POST and includes the address of the $POST routine itself.

4

```
$dmodule(*),lastapar=none

$HASP468 MODULE(HASCDAU)   ADDRESS=03004BB8,ASSEMBLY=(08/19/92,
$HASP468                   15.55),ENVIRON=USER,EXITPTS=(),
$HASP468                   IBMJES2=BASE,LASTAPAR=NONE,
$HASP468                   LENGTH=0002C0,LOADMOD=HASCDAU,
$HASP468                   MACLEVEL=4,SPLEVEL=CHECK

$HASP468 MODULE(HASCDSAL)  ADDRESS=02FF2478,ASSEMBLY=(08/19/92,
$HASP468                   15.56),ENVIRON=USER,
$HASP468                   EXITPTS=(31,34,48),IBMJES2=BASE,
$HASP468                   LASTAPAR=NONE,LENGTH=004B80,
$HASP468                   LOADMOD=HASCDSAL,MACLEVEL=4,
$HASP468                   SPLEVEL=CHECK
```

JES2 displays information about the modules that have not been affected by service.

```
$dmodule(hascsisc),long

$HASP468 MODULE(HASCSISC)
$HASP468 MODULE(HASCSISC)
ADDRESS=05DAC000,ASSEMBLY=(11/17/99,
$HASP468 16.04),ENVIRON=USER,EXITPTS=(),
$HASP468 FMID=HJE6607,IBMJES2=BASE,
$HASP468 LASTAPAR=OW35104,LASTPTF=UW63920,
$HASP468 LENGTH=004130,LOADMOD=HASCSISC,
$HASP468 MACLEVEL=6,
$HASP468 ROUTINES=(SSICSCAN=05DAC050,
$HASP468 SSICSTAT=05DAC2E0,SSISTAT=05DAC760,
$HASP468 CNVDEVID=05DAF1C8,PRJBCLD=05DAF4C8),
$HASP468 SPLEVEL=CHECK,TABLES=(),
$HASP468 VERSION=OS 2.7.0,UVERSION=
```

JES2 displays characteristics of module HASCSISC, including extended attributes such as the list of routine names.

5

```
$dmodule(haspnuc),addr,assembly,env,exitpts

$HASP468 MODULE(HASPNUC)   ADDRESS=00006000,ASSEMBLY=(08/19/92,
$HASP468                   16.37),ENVIRON=JES2,EXITPTS=(7,14,21)
```

JES2 displays the address, assembly date, environment, and exit points for module HASPNUC.

6

```
$dmod(haspnuc),load,macl,spl

$HASP468 MODULE(HASPNUC)   LOADMOD=HASJES20,MACLEVEL=4,
$HASP468                   SPLEVEL=CHECK
```

This command displays the name of the load module in which this module is linked, the value assigned to the SET= parameter on the SPLEVEL macro, and the SPLEVEL= assigned.

7

```
$dmodule,routines=$post

$HASP468 MODULE(HASPNUC)
$HASP468 MODULE(HASPNUC)   ADDRESS=00006000,ASSEMBLY=(11/17/99,
$HASP468                   18.07),ENVIRON=MIXED,EXITPTS=(7,21),
$HASP468                   FMID=HJE6607,IBMJES2=BASE,
$HASP468                   LASTAPAR=OW40627,LASTPTF=UW63110,
$HASP468                   LENGTH=00A530,LOADMOD=HASJES20,
$HASP468                   MACLEVEL=6,ROUTINES=($POST=00007EA8),
$HASP468                   SPLEVEL=CHECK
```

8

```
$dmodule,(hascsisc),long

$HASP468 MODULE(HASCSISC)
$HASP468 MODULE(HASCSISC)  ADDRESS=05DAC000,ASSEMBLY=(11/17/99,
$HASP468                   16.04),ENVIRON=USER,EXITPTS=(),
$HASP468                   FMID=HJE6607,IBMJES2=BASE,
$HASP468                   LASTAPAR=OW35104,LASTPTF=UW63920,
$HASP468                   LENGTH=004130,LOADMOD=HASCSISC,
$HASP468                   MACLEVEL=6,
$HASP468                   ROUTINES=(SSICSCAN=05DAC050,
$HASP468                   SSICSTAT=05DAC2E0,SSISTAT=05DAC760,
$HASP468                   CNVDEVID=05DAF1C8,PRJBCLD=05DAF4C8),
$HASP468                   SPLEVEL=CHECK,TABLES=(),
$HASP468                   VERSION=OS 2.7.0,UVERSION=
```

$D N - Display Job Queue Information

Function

To display the following information for the specified jobs:

- Job number
- Job name
- Job status
- Job class
- Job priority
- Job's affinities for MAS member(s)
- Percentage of spool disk utilization

Syntax

```
►►──$D──N──┬──────────┬──┬──────────────┬──,Q=──┬─CNV──┬─class──┬──────────┬──────────────────────────────────────────►◄
           ├─,IND─────┤  └─,V=volser────┘       │      ├─STC│$──┤          │
           ├─,memname─┤                         │      ├─TSU│@──┤          │
           ├─,ANY─────┤                         │      └─*──────┘          │
           └─,ALL─────┘                         ├─XEQ──┬─class──┬──────────┤
                                                │      ├─STC│$──┤          │
                                                │      ├─TSU│@──┤          │
                                                │      └─*──────┘          │
                                                ├─OUT──────────────────────┤
                                                ├─PPU──────────────────────┤
                                                ├─HOLD─────────────────────┤
                                                └─XMT──┬─LOCAL│ANYLOCAL──┤
                                                       ├─Nnnnn│nodename──┤
                                                       └─destid──────────┘
```

Parameters

N JES2 displays job information for the specified jobs.

Note: You must specify at least one operand, unless you are issuing this command from an RJE terminal. If you do not specify any operands, JES2 issues the $HASP606 message indicating that you supplied an insufficient number of operands.

memname
JES2 displays information for all jobs whose affinities for member(s) of the MAS include the member identified by the 1 to 4 character member name.

ANY
JES2 displays information for all jobs with affinities of ANY.

ALL
JES2 displays information for all jobs in the multi-access spool configuration, regardless of affinity. If a job has affinity with more than one member, it is displayed only once.

IND
JES2 displays information for all jobs whose affinity is for members operating in independent mode. When you specify IND with memname, JES2 displays only those jobs with IND affinity and member name affinity. When you specify IND with ANY, JES2 displays all jobs with the affinity of ANY and IND. When you specify IND with ALL or when it is specified alone, JES2 displays all jobs with the IND affinity.

Notes:

1. The first two operands of the $D N command (those operands concerning affinity) are positional in nature; if entered, they must be in the order shown.
2. The ANY and IND parameters refer only to jobs awaiting execution/conversion. Affinity is ignored for jobs awaiting print/punch processing; in this case, specifying ANY or IND results in a list of *all* waiting jobs.

V=volser
JES2 displays information for all jobs that have data on the spool volume specified by volser.

R=
The output group destination or range of destinations (low to high) for which JES2 displays job information. If you omit this operand or specify this operand without a node id when entering the command from a remote workstation or another node (through a node send command, $Nn), JES2 displays only those jobs with a default print/punch routing to that particular remote or node. Therefore, if you want to display jobs with print/punch routing of the target node, this operand must be specified with a node id of the target node (for example, R=N2.U25 or R=NEWYORK.R41.) For further information, refer to the section on SEND commands through the network. The value for all routing numbers can range from 1 to 32767. See “Route Codes” on page 92 for a description of how to specify route codes.

Note: NODENAME=REQUIRED on the DESTDEF initialization statement will cause JES2 to require that a userid be prefixed with a node name.

The valid specifications are:

LOCAL|ANYLOCAL
Indicates that job queue information is displayed at the local node.

destid Indicates that job queue information is displayed at the specified node(s) through an alias for the name of the node. If destid is specified alone, it refers to both the node and the remote.

Nnnnn|nodename
Indicates that job queue information is displayed at the specified node(s) through the decimal node identifier or an EBCDIC nodename.

NnnnnRmmmm|node.remote
Indicates that job queue information is sent to the remote Rmmmm at the node Nnnnn. Rmmmm can also be specified as RMmmmm or RMTmmmm.

Ummmm
Indicates a special local routing for job queue information. Wildcards are not supported.

node.destid
Indicates that job queue information is displayed at the specified node. The destid refers to both the node and the remote.

remote
Indicates that job queue information is displayed at a remote. Remote can be specified in any of the following ways:

LOCAL|ANYLOCAL
Indicates that job queue information is displayed at the local node.

Rmmmm
Indicates that job queue information is displayed at the specified remote. Rmmmm can also be specified as RMmmmm or RMTmmmm.

destid Indicates that job queue information is displayed at a destid referring to a remote.

***** Displays all output for the local node, including special local, userid, and a remote workstation on the local node.

node.*
Displays output for all userids at the local node.

node.*-node.*
Displays all output for each node in the range. The range may include the local node.

Nnnnn-Nnnnn
Displays all output for each node in the range. The range may include the local node.

Rmmmm-Rmmmm
Displays all output for each remote in the range.

Unnnn-Unnnn
Displays all output for each special local node in the range. Wildcards are not supported.

NnnnnRmmmm-NnnnnRmmmm
Displays a range of remotes at a node. Both node identifiers must be the same.

Q=CNV
Jobs waiting for conversion are displayed. You can specify one of the following values for ***cnv***:

***** Jobs waiting for conversion in all classes (A-Z, 0-9, STC, and TSU) are displayed. Specifying CNV* is equivalent to specifying CNV. Must be used as

```
Q=CNV*
```

. Cannot be used by itself.

class The execution class (A-Z, 0-9) of jobs waiting for conversion are displayed.

STC|$ Started tasks waiting for conversion are displayed. This operand can be abbreviated $.

TSU|@
Time-sharing users waiting for conversion are displayed. This operand can be abbreviated @.

Q=XEQ
Jobs waiting for execution are displayed. You can specify one of the following values for ***xeq***:

*****
Jobs waiting for execution in all classes (A-Z, 0-9, STC, and TSU) are displayed. Specifying XEQ* is equivalent to specifying XEQ. Must be used as

```
Q=XEQ*
```

. Cannot be used by itself.

class
The execution class (A-Z, 0-9) of jobs waiting for execution are displayed.

STC|$
Started tasks waiting for execution are displayed. This operand can be abbreviated $.

TSU|@
Time-sharing users waiting for execution are displayed. This operand can be abbreviated @.

Q=OUT
Jobs waiting for output processing are displayed.

Q=PPU
Jobs queued for print/punch processing are displayed. When JES2 displays the status of a job awaiting print/punch processing, only the default print and punch routings are listed. This does not necessarily mean the job has any output data sets awaiting print/punch processing for the default destination; there might be one or more specially routed data sets awaiting output. The $D N display does not provide this type of job output information.

Q=HOLD
Jobs waiting for any activity and in hold status are displayed.

Q=XMT
Jobs queued for network transmission are displayed. See “Route Codes” on page 92. for a description of how to specify route codes. The destination that is converted to the lower (or only) route code should be specified first, followed by the destination with the higher route code. If, for example, NEWYORK is the node name equivalent to N1 and DENVER is the node name equivalent to N10, then Q=XMT NEWYORK-DENVER is the order required to display jobs on the transmit queue for nodes N1,N2,...N10.

If this command originates from another node in the network and the Q= operand does not specify a node (first-level destination), the receiving node defaults the first-level destination to the node where the command originated.

If this command is sent to another node in the network using the $N command, be aware that the receiving node will default the node (first-level destination) of the Q= operand to the sending node. If another node is desired, specify a destination on the Q= operand that will resolve to the desired node (first level destination) at the receiving node.

The valid specifications are:

LOCAL|ANYLOCAL
Indicates that the number of jobs queued is displayed at the local node.

Nnnnn|nodename
Indicates that the number of jobs queued is displayed at the specified node through the decimal node identifier or an EBCDIC nodename. You can also specify a range (low to high).

destid
Indicates that the number of jobs queued is displayed at the specified node(s) through an alias for the name of the node.

Notes:

1. Since the system only transmits jobs to NJE nodes, destinations that refer to a remote work station are converted to the node to which that remote workstation is attached.
2. NODENAME=REQUIRED on the DESTDEF initialization statement will cause JES2 to require that a userid be prefixed with a node name.

Authority Required

This command requires **display** authority. The description of the $T RDRnn command explains how to ensure the proper MVS system command group authority is assigned.

This command requires **read** security access authority. For a description of assigning command input authority, see *z/OS JES2 Initialization and Tuning Guide*.

Processing Considerations

- If you specify only the Q= operand and omit all other operands (with the exception of the L= operand), JES2 displays information for jobs that have execution affinity for the member to which the console entering the command is attached.
- If you omit the Q= operand, JES2 displays information for jobs in the following categories:
  - All jobs queued for conversion
  - All jobs queued for execution
  - All jobs queued for network transmission
  - All jobs queued for the output processor
  - All jobs queued for print/punch

  Information for jobs in hold status is not displayed.

Scope

MAS-Wide. This command can display information about jobs on any or all members of the MAS, depending on the parameters you provide.

Messages

The $HASP890 message displays job number, job name, job status, job class, job priority, and job member affinities. The $HASP646 message displays the percentage of spool utilization.

Example

1 $D N

```
$dn,all,r=local,q=xeq
JOB00017  $HASP890 JOB(MYJOB)
$HASP890 JOB(MYJOB)     STATUS=(AWAITING EXECUTION),CLASS=H,
$HASP890                PRIORITY=9,SYSAFF=(ANY),HOLD=(JOB)
         $HASP646 9.1346 PERCENT SPOOL UTILIZATION
```

JES2 displays information for all jobs in the MAS configuration that are waiting for conversion and/or execution whose output routings are local.

2

```
$dn,q=xeqc
```

```
JOB00011  $HASP890 JOB(JLNK1007)
$HASP890 JOB(JLNK1007)  STATUS=(AWAITING EXECUTION),CLASS=C,
$HASP890                PRIORITY=9,SYSAFF=(ANY),HOLD=(NONE)
```

$D NETACCT - Display Networking Account Numbers

Function

To display the JES2 networking account numbers.

Syntax

```
►►──$D──NETACCT──┬──────────────────────────────┬──┬──────────────────────────────┬──────────►◄
                 └┤ Selection limiting keywords ├┘  └┤ Display limiting keywords ├┘
```

Display limiting keywords:

```
├──┬──────┬──┬──────┬──┬──────┬──┬──────┬──┬──────┬──────────────────────────────────────────┤
   └,JACCT┘  └,JTHRU┘  └,NACCT┘  └,NTHRU┘  └,TYPE┘
```

Selection limiting keywords:

```
├──┬──────────────────────────────┬──┬──────────────────────────────┬──┬──────────────────────────────┬──►
   └,──┬──┬──JACCT──┬──┬──────┬──┘  └,──┬──┬──JTHRU──┬──┬──────┬──┘  └,──┬──┬──NACCT──┬──┬──────┬──┘
       └/─┘         │  └─jacct─┘       └/─┘         │  └─jthru─┘       └/─┘         │  └─nacct─┘
                    ├─^=──────┤                    ├─^=──────┤                    ├─^=──────┤
                    ├─>───────┤                    ├─>───────┤                    ├─>───────┤
                    └─<───────┘                    └─<───────┘                    └─<───────┘

►──┬──────────────────────────────┬──┬──────────────────────────────┬──────────────────────────┤
   └,──┬──┬──NTHRU──┬──┬──────┬──┘  └,──┬──┬──TYPE──┬──┬──────┬──┘
       └/─┘         │  └─nthru─┘       └/─┘         │  └─type─┘
                    ├─^=──────┤                    ├─^=──────┤
                    ├─>───────┤                    ├─>───────┤
                    └─<───────┘                    └─<───────┘
```

Parameters

NETACCT
Displays JES2 networking account numbers.

JACCT=jacct
Specifies the 1 to 4 character name that defines a job account number.

JTHRU=jthru
Specifies the 1 to 4 character upper limit of the range of job account numbers.

NACCT=nacct
Specifies the 1 to 8 character name that defines a network account number.

NTHRU=nthru
Specifies the 1 to 8 character upper limit of the range of network account numbers.

TYPE=type
Specifies the type of account number defined by this statement.

Authority Required

This command requires **display** authority. The description of the $T RDRnn command explains how to ensure the proper MVS system command group authority is assigned.

This command requires **read** security access authority. For a description of assigning command input authority, see *z/OS JES2 Initialization and Tuning Guide*.

Scope

Single Member. The response to this command will be a display of information about this member only.

Messages

The individual parameter descriptions list the resulting messages.

Example

1 `$D NETACCT`

```
$d netacct
$HASP468 NETACCT
$HASP468 NETACCT  JACCT=1234,JTHRU=1234,NACCT=NET001A,
$HASP468          NTHRU=NET001A,TYPE=BOTH
```

$D NJEDEF - Display the JES2 Network Environment

Function

To display the JES2 network environment.

Syntax

```
►►──$D──NJEDEF──┬──────────┬──┬──────────────────────────────┬──┬──────────┬──┬──────────┬──┬──────────┬──►
                └─,DELAY───┘  └─,HDRBUF──┬──────────────────┬─┘  └─,JRNUM───┘  └─,JTNUM───┘  └─,LINENUM──┘
                                         │   ┌──────────┐   │
                                         │   ▼          │   │
                                         └─=(──┬─FREE───┬──)─┘
                                               ├─LIMIT──┤
                                               └─WARN───┘

►──┬──────────┬──┬──────────┬──┬──────────┬──┬──────────┬──┬──────────┬──┬──────────┬──┬──────────────────►
   └─,MAILMSG─┘  └─,MAXHOP──┘  └─,NODENUM─┘  └─,OWNNAME─┘  └─,OWNNODE─┘  └─,PATH───┘  └─,RESTMAX─┘

►──┬──────────┬──┬──────────┬──┬──────────┬──┬──────────┬──────────────────────────────────────────────►
   └─,RESTNODE┘  └─,RESTTOL─┘  └─,SRNUM───┘  └─,STNUM───┘

►──┬──────────┬──────────────────────────────────────────────────────────────────────────────────────►◄
   └─,TIMEtol─┘
```

Parameters

DELAY
Displays the maximum length of time, in seconds (10-999), that a message or command is delayed in any stage of transmission between nodes before the system assumes that possible lockout situations have occurred.

HDRBUF=[FREE|LIMIT|WARN]
Allows installations to display the amount of storage used by NJE headers and trailers.

FREE
Displays the number of header/trailer cells at an installation.

LIMIT
Displays the maximum number (10-9999) of NJE header and trailer cells allocated at this installation for jobs and SYSOUT data received from the network.

WARN
Displays the percentage (0-100) of NJE header and trailer cells in use at an installation.

JRNUM
Displays the number (0-7) of network job receivers associated with each line.

JTNUM
Displays the number (0-7) of network job transmitters associated with each line.

LINENUM
Displays the number of lines (0-32767), including CTC (channel to channel) adapters, to be used by this JES2 member for NJE communications.

MAILMSG
Displays whether (YES) or not (NO) JES2 issues the $HASP549 mail notification message automatically to notify a userid that a transmitted file has arrived from another node or a spool reload procedure.

MAXHOP
Displays the maximum number of nodes (0-32k) a job or output can cross to reach a destination.

NODENUM
Displays the maximum number (1-32767) of nodes in the NJE network to which this system belongs, or a value greater than or equal to the highest numbered node in your system.

OWNNAME
Displays the name of this node.

OWNNODE
Displays the number (1-32767) of this node.

PATH
Displays the maximum number (1-8) of paths from the local member to a given non-adjacent node that must be maintained simultaneously.

RESTMAX
Displays the maximum tolerable resistance (0 to 79992000) of a network connection for both adjacent and non-adjacent nodes.

RESTNODE
Displays the resistance (1-2000) of this node to the flow of jobs through the network.

RESTTOL
Displays the maximum difference in resistance (0-8000) allowed between the best possible path and an acceptable alternate path.

SRNUM
Displays the number (0-7) of NJE SYSOUT receivers associated with each NJE line. This value should match the STNUM specification at other subsystems with which this member communicates directly.

STNUM
Displays the number (0-7) of NJE SYSOUT transmitters associated with each NJE line.

TIMEtol
Displays the time variation in minutes (0-1500) that occurs between the time-of-day (TOD) clocks of this node and any adjacent node at signon.

Authority Required

This command requires **display** authority. The description of the $T RDRnn command explains how to ensure the proper MVS system command group authority is assigned. The $T NODE(nnnn) command sets the command authority for a node.

This command requires **control** security access authority. For a description of assigning command input authority, see *z/OS JES2 Initialization and Tuning Guide*.

Scope

Single Member. The response to this command will be a display of information about this member only.

Messages

The $HASP831 message displays the current values of all the parameters on the NJEDEF initialization statement.

Example

1 `$D njedef`

```
$HASP831 NJEDEF  OWNNAME=POK,OWNNODE=1,DELAY=120,
$HASP831         HDRBUF=(LIMIT=10,WARN=80,FREE=10),JRNUM=1,
$HASP831         JTNUM=3,SRNUM=4,STNUM=3,LINENUM=3,MAILMSG=NO,
$HASP831         MAXHOP=0,NODENUM=5,PATH=1,RESTMAX=79992000,
$HASP831         RESTNODE=100,RESTTOL=0,TIMETOL=1440
```

The $HASP831 message displays the current status of global network definitions in the installation.

$D NODE(nnnn) - Display a Node's Characteristics

Function

To display the characteristics of the specified node(s).

One or more parameters on this command accepts wildcards. Parameter descriptions will note that.

Syntax

```
►►──$D──NODE──┬──────────────────────────────────────────────┬──┬──────────────────────────────────────────────┬──►
              │ nnnn ──┬──────────┬──────────────────────────│  │ Selection limiting keywords │
              │        └─ - ─┬─nnnn─┬──────────────────────│  └──────────────────────────────────────────────┘
              │              └──*───┘                        │
              │ 'xxxxxxxx' ──────────────────────────────────│
              │          ┌──,──────────────────────────────┐│
              │          ▼                                  │
              │ ( ──┬─nnnn─┬──┬──────────┬──┬──────────┬──┬─│─ ) ──│
              │     │  *   │  │          │  │          │  │ │      │
              │     │      │  │ - ─┬─nnnn─┬│  │ - ─┬─nnnn─┬│  │      │
              │     │      │  │    └──*───┘│  │    └──*───┘│  │      │
              │     │      │  │            │  │            │  │      │
              │     │ xxxxxxxx ─────────────────────────────│  │      │
              │     │ 'xxxxxxxx' ───────────────────────────│  │      │
              │     └──────────────────────────────────────┘  │      │
              └───────────────────────────────────────────────┘      │
►──┬──────────────────────────────────────────────────────────────────────────────────────────────────────────────►◄
   │ Display limiting keywords │
   └───────────────────────────┘
```

Display limiting keywords:

```
├──┬──────────────────────────────────┬──┬──────────┬──┬──────────┬──┬──────────┬──┬──────────┬──►
   │ ,AUTH ──┬──────────────────────┐│  │ ,COMPACT │  │ ,ENDNODE │  │ ,HOLD    │  │ ,LINE    │  │ ,LOGMODE │
   │         │          ┌──,──────┐│ │└──────────┘  └──────────┘  └──────────┘  └──────────┘  └──────────┘
   │         │          ▼          │ │
   │         │ =( ──┬─Device─┬──)──│ │
   │         │      │ Job    │     │ │
   │         │      │ Net    │     │ │
   │         │      └─System─┘     │ │
   │         └─────────────────────┘ │
►──┬──────────────────────────────────┬──┬──────────┬──┬──────────┬──┬──────────┬──┬──────────┬──►
   │ ,LOGON │ ,NAME │ ,Password ──┬──────────────────┐│ │ ,PATHMGR │ │ ,PENCRYPT │
   │        │       │             │          ┌──,──────┐│ │          │ │           │
   │        │       │             │          ▼          │ │          │ │           │
   │        │       │             │ =( ──┬─SEND───┬──)──│ │          │ │           │
   │        │       │             │      └─VERify─┘     │ │          │ │           │
   │        │       │             └─────────────────────┘ │          │ │           │
►──┬──────────────────────────────────────────────────────────────────────────────────────────────────►
   │ ,PRIVATE │ ,RECeive │ ,REST │ ,SENTREST │ ,STATUS │ ,SUBnet │ ,TRace │
   └──────────┘──────────┘───────┘───────────┘─────────┘─────────┘────────┘
►──┬──────────────────────────────────────────────────────────────────────────────────────────────────►
   │ ,TRAnsmit │
   └───────────┘
```

Selection limiting keywords:

```
├──┬──────────────────────────────────────────────────────────────────────────────────────────────────►
   │                                                                                                  │
   │ ,──┬──/──┬─AUTH─=(──┬──────────────────────────────────────────────────────────────────────────┐│
   │    │     │          ▼                                                                          │
   │    │     │          ├──┬──/──┬─Device──┬──=──┬──No──┬──┬──/──┬─Job───┬──=──┬──No──┬──┬──/──┬─Net───┬──=──┬──No──┬──┬──/──┬─System──┬──=──┬──No──┬──│─ ) ──│
   │    │     │          │  │     │         │     │ ^=   │  │ Yes │       │     │      │  │     │       │     │      │  │     │         │     │      │  │      │
   │    │     │          │  │     │         │     │      │  │     
```

```
►──┬──────────────────────────────────────────────────────────────────────────────────────────────────────────────►
   │ ,──┬──/──┬──ENDNODE──┬──=──┬──No──┬──┬──────────────────────────────────────────────────────────────────────
   │    │     │           │     │      │  │ ,──┬──/──┬──HOLD──┬──=──┬──JOBS──┬──┬──────────────────────────────────
   │    │     │           │     │      │  │    │     │        │     │        │  │ ,──┬──/──┬──LINE──┬──=──┬──line──┬──
   │    │     │           │     │      │  │    │     │        │     │        │  │    │     │        │     │        │  │
```

Net[=Y|N]
Refers to the net authority of a node.

System[=Y|N]
Refers to the system authority of a node.

COMPACT[=nn]
Displays the compaction table number (0-99) used for outbound compaction in communicating with the specified node. Zero denotes no compaction.

ENDNODE[=Yes|No]
Displays whether the node is to be considered eligible for use in store-and-forward operations.

HOLD[=JOBS|NONE]
Displays whether the local node holds jobs (HOLD=JOBS) or does not hold jobs (HOLD=NONE) received from the specified node.

LINE[=line]
Displays a line that is dedicated to the NJE session associated with this node. The subscript is specified as a numeric value (1-32767).

LOGMODE[=avvvvvvv]
Displays the logon mode table entry name for this application.

LOGON=logon
Specifies the number (1-999) of the local LOGON DCT which should be used when specifying connections to the application.

NAME
The 1 to 8 alphanumeric or special ($, #, or @) character name that symbolically defines the node.

Password[=(SEND[,VERify])]
Displays password information associated with the node.

SEND
Displays whether the 1 to 8 character password sent to a node by an NJE connection has been set.

VERify
Displays whether the 1 to 8 character password received from a node by an NJE connection has been set.

PATHMGR[=No|Yes]
Displays whether NCC records relevant to the path manager should be sent to this node.

PENCRYPT[=No|Yes]
Displays whether or not passwords sent in NJE headers are to be encrypted for jobs destined to the specified node.

PRIVATE[=No|Yes]
Displays whether the connection between this node and an adjacent node is broadcast to the rest of the network. This parameter is not used if the node is not a directly adjacent node.

RECeive[={BOTH|JOBS|NONE|SYSOUT}]
Displays what the local node (as specified by the OWNNODE parameter on the NJEDEF initialization statement) receives from the specified node. If the node is not a directly adjacent node, this parameter is not used. You can specify a keyword value below:

BOTH
The local node receives both jobs and SYSOUT data from the specified node.

JOBS
The local node receives only jobs from the specified node.

NONE
The local node does not receive any data from the specified node.

SYSOUT
The local node receives only SYSOUT data from the specified node.

REST[=nnnn]
Displays an integer (0-2000) that represents the resistance rating of the connection as viewed by the installation manager and coordinated with other installations.

SENTREST[=ACCEPT|IGNORE]
Displays whether the resistance from an adjacent node is used in calculating the resistance of an adjacent connection.

STATUS
Displays the available paths to the node in order of increasing path resistance. The following can be displayed:

VIA/LINEnnnn
The node is reachable by the specified line.

VIA/*membername*
The node is reachable by a line at the specified member of the MAS.

PENDING/*node***-M***nnn*
There is no active line to the target node even though static connections describe a path to the target.

AWAITING RESET WITH *node*
The primary trunk of a multi-trunk connection to *node* has gone down and the new primary is in the process of being established.

SIGNON/LINE*nnnn*
The path to the target node will be through line *nnnn* as soon as the current signon completes.

OWNNODE
The node is the local node.

UNCONNECTED
The node is not reachable.

SUBnet[=xxxxxxxx]
Displays the 1 to 8 alphanumeric or special ($, #, or @) character name of the subnet that is associated with this node.

TRace[=No|Yes]
Displays whether or not NCC records to and from the direct connection to the specified node should be traced.

TRAnsmit[={BOTH|JOBS|NONE|SYSOUT}]
Displays what type of data the local node (as specified by the OWNNODE parameter on the NJEDEF initialization statement) transmits to the specified node. If the node is not a directly adjacent node, this parameter is not used. You can specify a keyword value below:

BOTH
The local node transmits both jobs and SYSOUT data to the specified node.

JOBS
The local node transmits only jobs to the specified node.

NONE
The local node does not transmit any data to the specified node.

SYSOUT
The local node transmits only SYSOUT data to the specified node.

Authority Required

This command requires **read** security access authority. For a description of assigning command input authority, see *z/OS JES2 Initialization and Tuning Guide*.

Messages

The $HASP826 message displays information about the specified node.

Example

1 `$d node(4)`

```
$HASP826 NODE(4)  NAME=NODE4,STATUS=(UNCONNECTED),
$HASP826          AUTH=(DEVICE=YES,JOB=YES,NET=NO,SYSTEM=YES),
$HASP826          TRANSMIT=BOTH,RECEIVE=BOTH,HOLD=NONE,
$HASP826          PENCRYPT=NO,ENDNODE=NO,REST=0,SENTREST=ACCEPT,
$HASP826          COMPACT=0,LINE=0,LOGMODE=,
$HASP826          PASSWORD=(VERIFY=(NOTSET),SEND=(NOTSET)),
$HASP826          PATHMGR=YES,PRIVATE=NO,SUBNET=,TRACE=NO
```

JES2 displays the characteristics for node 4.

$D O Job - Display Output Characteristics

Function

To display the output characteristics of specified output groups or individual job output elements (JOEs).

Syntax

```
►►──$D O──┬─Job──────┬──┬──────────────────────────────────────────────┬──┬──────────────────────────────────────►
          ├─JOBQ─────┤  │ ┌──────────────────────────────────────────┐ │  │ ┌─Selection limiting keywords─┐
          ├─JQ───────┤  ├─nn──┬──────────┬──────────────────────────┤ │  │ │                             │
          ├─Stc──────┤  │    └─-──┬─mm─┬─┘                          │ │  │ │                             │
          └─Tsu──────┘  │         └─*──┘                            │ │  │ │                             │
                        ├─'output'──────────────────────────────────┤ │  │ │                             │
                        │   ┌──────────────────────────────────────┐ │  │ │                             │
                        │   ▼                                      │ │  │ │                             │
                        └─(──┬─nn─┬──┬──────────┬──┬─────────────┬─)─┘  │ │                             │
                             └─*──┘  └─-──┬─mm─┬─┘  │             │    │ │                             │
                                          └─*──┘    │             │    │ │                             │
                             ├─output──────────────┤             │    │ │                             │
                             └─'output'────────────┘             │    │ │                             │
►──┬─Display limiting keywords─┬──────────────────────────────────────────────────────────────────────────►◄
  └─┴───────────────────────────┴─────────────────────────────────────────────────────────────────────────────
```

Display limiting keywords:

```
├──┬─,ALL──┬──┬─,Burst──┬──┬─,CRTIME──┬──┬─,──┬─Age──┬──┬─,──┬─C───┬──┬─,──┬─FLash─┬──┬──────────────────────►
   │       │  │         │  │          │  │    └─DAys─┘  │    └─FCB─┘  │    └─O─────┘  │
   ►──┬─,Forms──┬──┬─,HELD──┬──┬─,HOLD──┬──┬─,HOLDRC──┬──┬─,Hours──┬──┬─,──┬─JM──────┬──┬─,LONG──┬──┬─,OFFS──┬──►
      │         │  │        │  │        │  │          │  │         │  │    └─JOBMASK─┘  │        │  │        │
      ►──┬─,──┬─NDISP──┬──┬─,OUTGrp──┬──┬─,PAGEs──┬──┬──────────────────────────────────────────────────────►
         │    └─OUTDisp─┘  │          │  │         │  │
         ►──┬─,Priority──┬──┬─,PRMode──┬──┬─,Queue──┬──┬─,READY──┬──┬─,REBUILD──┬──┬─,RECords──┬──┬─,──┬─Dest────┬──┬──►
            │            │  │          │  │         │  │         │  │           │  │           │  │    └─Routecde─┘  │
            ►──┬─,SECLABEL──┬──┬─,STATus──┬──┬─,TSOavail──┬──┬─,──┬─T───┬──┬─,USERID──┬──┬─,Writer──┬──┬──────────┤
               │            │  │          │  │            │  │    └─UCS─┘  │          │  │          │  │
```

Selection limiting keywords:

```
├──┬─,──┬─/─┬─ALL──┬──┬─,──┬─/─┬─Burst──┬─=──┬─No──┬──┬──────────────────────────────────────────────────────►
   │    │   │      │  │    │   │         │ ^= │ Yes │  │
   ►──┬─,──┬─/─┬─CMDauth──┬─=──┬─cmdauth──────────────┬──┬──┬─,──┬─/─┬─Age──┬─>──┬─days──┬──┬──────────────────►
      │    │   │          │ ^= │                      │  │  │    │   │      │ <  │       │  │
      │    │   │          │    │   ┌──────────────┐   │  │  │    │   │      └────┘       │  │
      │    │   │          │    │   ▼     (1)      │   │  │  │    │   │ ┌─DAys─┐          │  │
      │    │   │          │    └─(─────cmdauth────)─┘  │  │  │    │   │ │      │          │  │
      │    │   │          │                            │  │  │    │   │ └─/────┘          │  │
      │    │   │          │                            │  │  │    │   │                   │  │
```

$D O Job

```
►─┬──────────────
```

Parameters

output
Specifies 1 to 8 alphanumeric, special ($, #, or @) or wildcard characters (or a combination of them) that can be used to select a subset of jobs whose job name matches this combination of characters (mask).

'output'
The name of the job that is displayed. This name must appear as coded on the JOB statement and must be enclosed in apostrophes. If more than one job exists with this name, all output will be displayed.

Job
A Batch job or range of batch jobs is to be displayed.

JOBQ|JQ
Specifies *all* jobs, STCs, and TSUs across the MAS for processing.

Stc
A started task or range of started tasks is to be displayed.

Tsu
A time-sharing user or range of time-sharing users is to be displayed.

Age|DAys<days | Age|DAys>days
Specifies the age of affected output in days. Only output more (with DAYS>nn) or less (with DAYS<nn) than the specified number of days in age are displayed. The days are counted from the current hour.

ALL
JES2 displays all job output elements belonging to the specified job.

Note: This parameter is positional and must immediately follow the jobid (JOB, STC, TSU), JOBQ or 'jobname' (or JOBMASK if coded) parameter.

Burst={No|Yes}
Specifies whether the printed output is to be burst into separate sheets (Yes) or to be in continuous, fanfold mode (No).

C|FCB=fcb
A 1 to 4 alphameric character or special character ($ # @) identifier for the data set forms control or carriage specifications.

CMDauth=(auth1{,auth2})
Only the output that can be affected from the specified remote(s) or node(s) will be released. The valid specifications are:

LOCAL|ANYLOCAL
Only the local devices at the local node can affect the output.

Nnnnn|nodename
Only local devices at the specified node can affect the output.

Rnnnn
Only the specified remote device can affect the output.

NnnnnRnnnn|nodename.Rnnnn
Only the specified remote device at the specified remote node can affect the output.

destid
A destid corresponding to any of the above remote devices.

Note: Specification of the CMDAUTH filter does not override the authority of the console from which the command is issued; both the authority of the console and the specified CMDAUTH filter must match for the job to be affected.

CRTIME
Specifies the time this piece of output was created.

Dest|Routecde=routecde
The destination assigned to the job output element(s). You may specify a remote destination (workstation), another node, or a specific local device. The value for all routing numbers can range from 1 to 32767.

If this command originates from another node in the network and the D|ROUTECDE= operand does not specify a node (first-level destination), the receiving node defaults the first-level destination to the node were the command originated.

If this command is sent to another node in the network using the $N command, be aware that the receiving node will default the node (first-level destination) of the D|ROUTECDE= operand to the sending node. If another node is desired, specify a destination on the D|ROUTECDE= operand that will resolve to the desired node (first-level destination) at the receiving node.

Notes:

1. If an output group is queued for transmission and an operator changes its destination, the userid portion of the routing is lost. If an output group is interrupted while printing and the destination is changed, the output group will begin printing from the top when it is printed at the new destination.
2. NODENAME=REQUIRED on the DESTDEF initialization statement will cause JES2 to require that a userid be prefixed with a node name.
3. Greater than (> or >=) and less than (< or <=) filters may be used in conjunction to support route code ranges. For example, you could specify the filters R>=R1,R<=R7 to affect output for all remotes in the range R1 to R7. Note that:
   - The destination being filtered upon is converted to its binary equivalent prior to the comparison.
   - When using nodal ranges, a specification of ″nodename.*″ must be used. Only the nodal routing of the output will be compared.

The following specifications are valid:

LOCAL|ANYLOCAL
Indicates that jobs are to be printed or punched at the local node.

destid Indicates that jobs are to be printed or punched at the specified node(s). You can specify this location by an alias for the name of a node. If destid is specified alone, it refers to both the node and the remote.

Nnnnn|nodename
Indicates that jobs are to be printed or punched at the specified node(s). You can specify a node using the decimal node identifier or an EBCDIC nodename.

NnnnnRmmmm|node.remote|node.userid
Indicates routing to the remote Rmmmm at the node Nnnnn. Rmmmm can also be specified as RMmmmm or RMTmmmm.

Ummmm
Indicates special local routing.

node.destid
Indicates a destination at the specified node. The destid refers to both the node and the remote. The node specified in the destid must be the same as the node portion of the route code. If the number of the remote is reassigned, you can use the destid to send to this node.

remote
Indicates routing to a remote. Remote can be specified in any of the following ways:

LOCAL|ANYLOCAL
Indicates that jobs are to be printed or punched at the local node.

Rmmmm
Indicates routing to the specified remote. Rmmmm can also be specified as RMmmmm or RMTmmmm.

destid Indicates routing to a destid referring to a remote.

userid Indicates routing to a valid TSO userid.

node.*
Indicates that the node name is to be modified to the specified node name, but the remote name will remain the same.

***** Indicates that the node name is to be modified to the local node name, but the remote name will remain the same.

Forms=forms
A 1 to 8 alphameric or special character ($ # @) identifier for the print or punch forms.

HELD
Only held output is to be displayed.

HOLD={NONE|OPER|SYS}
This operand explicitly sets the operator HOLD type. The only hold type that can be set using this operand is OPER. This parameter prevents JES2 from selecting an output group for any processing other than purging. Specifying HOLD= for an output group is more restrictive than specifying an output group's output disposition. OUTDISP=HOLD or LEAVE prevents JES2 from selecting an output group for print/punch or external writer processing only.

Specifying the REL= parameter on this command makes the output available for processing.

HOLDRC=holdrc
Specifies the hold reason code for system held output groups (HOLD=SYS).

Hours=hours
Specifies the age of affected output in hours. Only output more (with HOURS>nn) or less (with HOURS<nn) than the specified number of hours in age are affected.

JOBMASK|JM=jobmask
Specifies 1 to 8 alphanumeric, special ($, #, or @) or wildcard characters (or a combination of them) that can be used to select a subset of jobs whose job name matches this combination of characters (mask). For a description of wildcards, see "Using Wildcards" on page 93.

Notes:

1. This is a positional parameter. Specify this following the job_id (JOB, STC, or TSU) or JOBQ parameter.
2. The JOBMASK parameter is not valid with the *'jobname '* parameter.

OUTGrp=outgrp
The job output element(s) that are displayed.

grpid
The 1 to 8 character alphameric group ID that is either specified by the user in the JCL or generated by JES2.

joeid1
A number assigned by JES2 to distinguish between job output elements within the output group.

joeid2
A number assigned by JES2 to distinguish between several copies of grpid.joeid1.

OUTDISP={H|HOLD|K|KEEP|L|LEAVE|P| PURGE|W|WRITE}
Indicates that you wish to display the output for the specified job that matches this current disposition. Specify WRITE, HOLD, LEAVE, or KEEP.

Note: If you do not specify this parameter, all output with a disposition of WRITE, HOLD, KEEP, or LEAVE will be modified.

NDISP={H|HOLD|K|KEEP|L|LEAVE|P| PURGE|W|WRITE}
Indicates what the new output disposition should be for the specified job's output. Specify WRITE, HOLD, LEAVE, KEEP or PURGE.

FLASH|O=flash
A 1 to 4 alphameric or special character ($ # @) overlay name (FLASH).

OFFS=*offs*
Displays offload device numbers on which sysout for the job has been archived or marked as archived by the $TO command.

PRIORITY=priority
The queue selection priority (0-255) assigned to the job output element(s).

PRmode=prmode
The process mode (1 to 8 alphanumeric characters) for the job output element(s).

QUEUE=queue
The output class (A-Z and 0-9) assigned to the job output element(s).

READY
Indicates that only READY output groups are to be displayed.

REBUILD={No|Yes}
Output on the rebuild queue is to be cancelled (Yes) or not cancelled (No).

RECords=records
The number of print records associated with the output group.

SECLABEL=seclabel
The security label associated with the output group.

T|UCS=ucs
A 1 to 4 alphanumeric or special character ($ # @) identifier for the universal character set specification. This will also set the character set (CHAR1) to be

used on non-impact printers unless the UCS and CHARS values are both assigned to an output data set by a job's JCL and their values are not equal.

TSOavail={No|Yes}
Indicates whether the output group is available for TSO OUTPUT processing.

USERID=userid
The userid associated with the output group.

Writer=writer
A 1 to 8 alphanumeric or special character ($ # @) writer name assigned to the job output element(s).

Authority Required

This command requires **job** authority. The description of the $T RDRnn command explains how to ensure the proper MVS system command group authority is assigned.

This command requires **update** security access authority. For a description of assigning command input authority, see *z/OS JES2 Initialization and Tuning Guide*.

Processing Considerations

- If you use this command to change both the destination and other output characteristics, those changes to the other output characteristics are ignored for duplicate output groups (those groups created by specifying more than one job copy or by issuing the $N command to repeat the processing of an output group).
- If any of the characteristics that you specify on this command are also specified as work selection criteria with the WS= parameter on the device initialization statement or using the $T device command, then those characteristics are compared against the matching output device specifications; work is selected accordingly.
- If the following characteristics are modified, the output group will begin printing from the top when the output starts printing again.
  - Burst
  - FCB
  - Destination
  - Form
  - Overlay (Flash)
  - Process mode(PRMODE)
  - UCS
  - Writer name
- Once a held output group has been released (the output disposition is changed to WRITE or KEEP), the group is no longer available for processing by the TSO/E OUTPUT command. For more information, see the $HASP686 message in *z/OS JES2 Messages*.

Scope

MAS-Wide. This command has an effect across the entire MAS.

Messages

The $HASP686 message displays the current output characteristics for each job output element specified.

Examples

1

```
$d o j'iebgener',outgrp=1.1.1

JOB00005  $HASP686 OUTPUT(IEBGENER)
$HASP686 OUTPUT(IEBGENER)  OUTGRP=1.1.1,BURST=NO,FCB=****,
$HASP686                   FLASH=****,FORMS=STD,HOLD=(NONE),
$HASP686                   OUTDISP=WRITE,PRIORITY=144,
$HASP686                   PRMODE=LINE,QUEUE=A,
$HASP686                   RECORDS=(53 OF 53),ROUTECDE=LOCAL,
$HASP686                   SECLABEL=,TSOAVAIL=NO,UCS=****,
$HASP686                   USERID=++++++++,WRITER=
```

JES2 displays the attributes of output group 1,1,1 associated with job IEBGENER.

2

```
$d o jobq,ready,r=local,outgrp

JOB00005  $HASP686 OUTPUT(IEBGENER) OUTGRP=1.1.1
JOB00005  $HASP686 OUTPUT(IEBGENER) OUTGRP=2.1.1
JOB00005  $HASP686 OUTPUT(IEBGENER) OUTGRP=3.1.1
JOB00006  $HASP686 OUTPUT(IEBGENE2) OUTGRP=1.1.1
JOB00006  $HASP686 OUTPUT(IEBGENE2) OUTGRP=4.1.1
STC00011  $HASP686 OUTPUT(VTAM)     OUTGRP=1.1.1
.
.
.
```

JES2 displays the output group identifier of all ready output groups destined to print locally.

3

```
$d o job,offs=

JOB00006  $HASP686 OUTPUT(IEBGENE2) OFFS=()
```

Displays the offload device numbers on which sysout for the job has been archived or marked as archived by the $TO command.

4

```
$d o jobq,q=h,hours>60

JOB00023  $HASP686 OUTPUT(IEBGENE1)
$HASP686 OUTPUT(IEBGENE1)  OUTGRP=3.1.1,BURST=NO,FCB=****,
$HASP686                   FLASH=****,FORMS=STD,HOLD=(NONE)
$HASP686                   OUTDISP=HOLD,PRIORITY=144,
$HASP686                   PRMODE=LINE,QUEUE=H,
$HASP686                   RECORDS=(43 OF 43),ROUTECDE=LOCA
$HASP686                   SECLABEL=,TSOAVAIL=YES,UCS=****,
$HASP686                   USERID=IBMUSER,WRITER=
```

Displays all output older than 2 days and 12 hours.

5

```
$dojobq1-*,age>1

STC00003  $HASP686 OUTPUT(IRRDPTAB)
$HASP686 OUTPUT(IRRDPTAB)  OUTGRP=1.1.1,BURST=NO,FCB=****,
$HASP686                   FLASH=****,FORMS=STD,HOLD=(NONE),
$HASP686                   OUTDISP=WRITE,PRIORITY=144,
$HASP686                   PRMODE=LINE,QUEUE=A,
$HASP686                   RECORDS=(53 OF 53),ROUTECDE=LOCAL,
$HASP686                   SECLABEL=,TSOAVAIL=NO,UCS=****,
$HASP686                   USERID=++++++++,WRITER=
```

Displays any job on the job queue with age greater than one day.

6
```
$dos1-*,hours>25

STC00003  $HASP686 OUTPUT(IRRDPTAB)
$HASP686 OUTPUT(IRRDPTAB)  OUTGRP=1.1.1,BURST=NO,FCB=****,
$HASP686                   FLASH=****,FORMS=DORA,HOLD=(NONE),
$HASP686                   OUTDISP=WRITE,PRIORITY=144,
$HASP686                   PRMODE=LINE,QUEUE=A,
$HASP686                   RECORDS=(53 OF 53),ROUTECDE=LOCAL,
$HASP686                   SECLABEL=,TSOAVAIL=NO,UCS=****,
$HASP686                   USERID=++++++++,WRITER=
```

Displays started task with hours greater than 25.

$D OFF.JR - Display Offload Job Receiver

Function

Display the offload job receiver associated with an individual device.

Syntax

```
►►──$D──OFF──┬──────────────────────────────────┬──.JR──┬──────────────────────────────────┬──►
             │ nn ┬──────────┬                  │       │ Selection limiting keywords      │
             │    │ - mm     │                  │       └──────────────────────────────────┘
             │    │ *        │                  │
             │    ┌──────────────────────────┐  │
             │    ▼                          ,  │
             │ (──┬ nn ┬──┬──────────┬──────────┬──)│
             │    │ *  │  │ - mm     │          │   │
             │    │    │  │ *        │          │   │
             └────┴────┴──┴──────────┴──────────┴───┘

►──┬──────────────────────────────────┬──────────────────────────────────────────────────►◄
   │ Display limiting keywords        │
   └──────────────────────────────────┘
```

Display limiting keywords:

```
├──┬──────────┬──┬──────────┬──┬──────────┬──┬──────────┬──┬──────────────────────────┬──┬──────────┬──►
   │ ,CLass   │  │ ,CReator │  │ ,Hold    │  │ ,JOBname │  │ ,MOD                     │  │ ,NOTify  │
   └──────────┘  └──────────┘  └──────────┘  └──────────┘  │                          │  └──────────┘
                                                           │   ┌──────────────────────┐ │
                                                           │   ▼                    , │ │
                                                           └─=(──┬ CLass ──────────┬──)┘ │
                                                                 ├ Hold ───────────┤     │
                                                                 ├ Routecde ───────┤     │
                                                                 └ SYSaff ─────────┘     │

►──┬──────────┬──┬──────────┬──┬──────────┬──┬──────────┬──┬──────────┬──┬──────────┬──┤
   │ ,RANGE   │  │ ,Routecde│  │ ,START   │  │ ,STATUS  │  │ ,SYSaff  │  │ ,WS      │
   └──────────┘  └──────────┘  └──────────┘  └──────────┘  └──────────┘  └──────────┘
```

Selection limiting keywords:

```
├──┬──────────────────────────┬──┬──────────────────────────┬──┬──────────────────────────┬──►
   │ ,  /  CLass  =  class    │  │ ,  /  Hold  =  No        │  │ ,  /  JOBname  =  jobname│
   │        ê=                │  │        ê=  Yes           │  │        ê=                │
   │        >                 │  │                          │  │        >                 │
   │        <                 │  │                          │  │        <                 │

►──┬──────────────────────────────────────────────────────────┬──┬──────────────────────────┬──►
   │ ,  /  MOD-=(──┬──────────────────────────────────────┬──)│  │ ,  /  NOTify  =  No      │
   │               │   ┌──────────────────────────────────┐ │   │        ê=  Yes           │
   │               │   ▼                                , │ │   │                          │
   │               │ /  CLass  =  class                  │ │   │                          │
   │               │        ê=                           │ │   │                          │
   │               │        >                            │ │   │                          │
   │               │        <                            │ │   │                          │
   │               │ /  Hold  =  No                      │ │   │                          │
   │               │        ê=  Yes                      │ │   │                          │
   │               │ /  SYSaff  =  sysaff                │ │   │                          │
   │               │        ê=                           │ │   │                          │

►──┬──────────────────────────┬──┬──────────────────────────┬──────────────────────────────►
   │ ,  /  SCHenv  =  schenv  │  │ ,  /  SRVclass  =  srvclass│
   │        ê=                │  │        ê=                │
   │        >                 │  │        >                 │
   │        <                 │  │        <                 │
```

```
►──┬──────────────
```

NOTify=Yes|No
Specifies whether a notification message is sent to the TSO/E userid specified on either the JOB statement or the /*NOTIFY control statement.

No
Indicates that a notification message is not sent when a pre-execution job is loaded from the offload data set.

Yes
Indicates that a notification message is sent when a pre-execution job is loaded from the offload data set.

RANGE
Specifies the job ID range of those jobs that can be loaded from the offload data set.

Routecde
Specifies the execution node selection criteria for jobs to be loaded. Valid values are:

ANYLOCAL|LOCAL
Indicates that only jobs routed to the local node for execution can be selected.

destid
Indicates that only jobs routed to the specified destid for execution can be selected. The destid can be the name of a node, or an alias for the name of a node.

Nnnnn|nodename
Indicates that only jobs routed to the specified node for execution can be selected. The node can be specified using the binary node identifier (nnnn) or the EBCDIC nodename.

SCHenv=schenv
Specifies the 1 to 16 alphanumeric, special ($, #, or @), or wildcard character (or combination of them) scheduling environment. Only those jobs with this SCHENV will be selected.

SRVclass=srvclass
Specifies the 1 to 8 alphanumeric, special ($, #, or @), or wildcard character (or a combination of them) service class name. Only those jobs with this service class will be selected.

START=Yes|No
Specifies the initial status of this receiver when its corresponding offload device is started for a receive operation, that is, when a
$S OFFLOAD(n),TYPE=RECEIVE command is issued.

No
Indicates that this receiver is not started when a corresponding
$S OFFLOAD(n) command is issued. This receiver can later be started individually by issuing the $S OFF(n).JR command and stopped as required by issuing the $P OFF(n).JR command.

Yes
Indicates that this receiver is started when a corresponding
$S OFFLOAD(n) command is issued.

STATUS
Specifies the status of the offload job receiver.

SYSaff
Specifies the member affinity for jobs that are selected for loading.

WS
Specifies the job selection criteria for this device.

Authority Required

This command requires **display** authority. The description of the $T INTRDRnn command explains how to ensure the proper MVS system command group authority is assigned.

Scope

Single Member. The command will be in effect fo this member only.

Messages

The $HASP883 message is issued in response to this command.

Example

1
```
$doff1.jr

$HASP883 OFF1.JR  STATUS=STARTABLE, CLASS=ABCDEFGH,CREATOR=,
$HASP883          HOLD=,JOBNAME=,MOD=(CLASS=,HOLD=,ROUTECDE=,
$HASP883          SYSAFF=),NOTIFY=NO,RANGE=(J1,2147483647),
$HASP883          ROUTECDE=(),START=YES,SYSAFF=(),WS=(CL/)
```

2
```
$doff1.jr

$HASP883 OFF1.JR
$HASP883 OFF1.JR STATUS=STARTABLE,CLASS=ABCDEFGH,CREATOR=,
$HASP883 HOLD=,JOBNAME=,MOD=(CLASS=,HOLD=,ROUTECDE=,
$HASP883 SYSAFF=),NOTIFY=NO,RANGE=(J1,2147483647),
$HASP883 ROUTECDE=(),SCHENV=,SRVCLASS=,START=YES,
$HASP883 SYSAFF=(),WS=(CL/)
```

$D OFF.JT - Display Offload Job Transmitter

Function

Display the offload job transmitter associated with an individual offload device.

Syntax

```
►►──$D──OFF──┬──────────────────────────────────┬──.JT──┬──────────────────────────────────┬──►
             │ nn ┬──────────┬                  │       │ Selection limiting keywords      │
             │    │ - ┬────┬ │                  │       └──────────────────────────────────┘
             │    │   │ mm │ │                  │
             │    │   │ *  │ │                  │
             │    │   └────┘ │                  │
             │    └──────────┘                  │
             │   ┌──────────┐                   │
             │   ▼          │                   │
             │ ( ─┬────┬─┬──┬──────────┬─────── ) │
             │    │ nn │ │ - ┬────┬ │           │
             │    │ *  │ │   │ mm │ │           │
             │    └────┘ │   │ *  │ │           │
             │           │   └────┘ │           │
             └───────────┴──────────┴───────────┘

►──┬──────────────────────────────────┬──────────────────────────────────────────────────►◄
   │ Display limiting keywords        │
   └──────────────────────────────────┘
```

Display limiting keywords:

```
├──┬──────────┬──┬──────────┬──┬──────────┬──┬──────────┬──┬──────────┬──┬──────────┬──┬──────────►
   │ ,CLass   │  │ ,CReator │  │ ,DISP    │  │ ,Hold    │  │ ,JOBname │  │ ,LIMit   │  │ ,NOTify  │  │ ,RANGE   │
   └──────────┘  └──────────┘  └──────────┘  └──────────┘  └──────────┘  └──────────┘  └──────────┘  └──────────┘

►──┬──────────┬──┬──────────┬──┬──────────┬──┬──────────┬──┬──────────┬──┬──────────┬──────────────┤
   │ ,Routecde│  │ ,START   │  │ ,STATUS  │  │ ,SYSaff  │  │ ,Volume  │  │ ,WS      │
   └──────────┘  └──────────┘  └──────────┘  └──────────┘  └──────────┘  └──────────┘
```

Selection limiting keywords:

```
├──┬──────────────────────────┬──┬──────────────────────────┬──┬──────────────────────────┬──►
   │ ,┬────┬─CLass─┬──────┬─class│  │ ,┬────┬─DISP──┬──────┬─DELETE│  │ ,┬────┬─Hold──┬──────┬──────│
   │  │ /  │       │ ê=   │      │  │  │ /  │       │ ê=   │ HOLD  │  │  │ /  │       │ ê=   │ No   │
   │  └────┘       │ >    │      │  │  └────┘       └──────┘ KEEP  │  │  └────┘       └──────┘ Yes  │
   │               │ <    │      │  │                               │  │                              │
   └───────────────┴──────┴──────┘  └───────────────────────────────┘  └──────────────────────────────┘

►──┬──────────────────────────┬──┬──────────────────────────┬──────────────────────────────────►
   │ ,┬────┬─JOBname─┬──────┬─jobname│  │ ,┬────┬─NOTify─┬──────┬──────│
   │  │ /  │         │ ê=   │        │  │  │ /  │        │ ê=   │ No   │
   │  └────┘         │ >    │        │  │  └────┘        └──────┘ Yes  │
   │                 │ <    │        │  │                              │
   └─────────────────┴──────┴────────┘  └──────────────────────────────┘

►──┬──────────────────────────┬──┬──────────────────────────┬──────────────────────────────────►
   │ ,┬────┬─SCHenv─┬──────┬─schenv│  │ ,┬────┬─SRVclass─┬──────┬─srvclass│
   │  │ /  │        │ ê=   │       │  │  │ /  │          │ ê=   │         │
   │  └────┘        │ >    │       │  │  └────┘          │ >    │         │
   │                │ <    │       │  │                  │ <    │         │
   └────────────────┴──────┴───────┘  └──────────────────┴──────┴─────────┘

►──┬──────────────────────────┬──┬──────────────────────────┬──────────────────────────────────┤
   │ ,┬────┬─START─┬──────┬─No │  │ ,┬────┬─STATUS──┬──────┬──│
   │  │ /  │       │ ê=   │ Yes│  │  │ /  │         │ ê=   │  │
   └────┘       └──────┘    │  │  └────┘         └──────┘  │
   └──────────────────────────┘  └──────────────────────────┘
```

Parameters

CLass=class

Specifies the job class(es) (A-Z, 0-9) to be selected by this job transmitter. A maximum of 15 job classes can be specified on this parameter. If you need to exceed the limit of 15 classes, specify Class=, (that is, null) and do not code CLass in the WS= list on this statement; this allows **all** defined classes to be transmitted.

CReator
Specifies the 1 to 8 character userid whose job(s) are to be selected by this job transmitter.

DISP={DELETE|HOLD|KEEP}
Specifies the disposition of all jobs that are selected for transmitting to the offload data set.

Hold={No|Yes}
Specifies whether jobs in HOLD status (that is, jobs that have been held by specifying a $H J command, TYPRUN=HOLD, or JCL HOLD) can be transmitted. Jobs that have been previously held (in a held class) do not apply to this parameter; such jobs are not considered here.

If you allow this parameter to default and HOLD is not in the work selection list, JES2 can select all jobs, whether held or not, for transmission. If you allow this parameter to default and HOLD is in the work selection list, no jobs can be transmitted.

No
Indicates that only jobs that are not in HOLD status can be selected.

Yes
Indicates that only jobs that are in HOLD status can be selected.

JOBname=jobname
Specifies the 1 to 8 character job name of the job(s) to be transmitted to the offload data set.

LIMit
Specifies the amount of output (in records) for which output can be selected.

NOTify={No|Yes}
Specifies whether a notification message is sent to the TSO/E userid specified on either the JOB statement or the /*NOTIFY control statement.

No
Indicates that a notification message is not sent when a pre-execution job is transmitted to the offload data set.

Yes
Indicates that a notification message is sent when a pre-execution job is transmitted to the offload data set.

RANGE=Jnnnnn[-nnnnn]|J1-65534
Specifies the job ID range of those jobs that can be transmitted to the offload data set.

Routecde
Specifies the execution node selection criteria for jobs to be transmitted. Valid values are:

ANYLOCAL|LOCAL
Indicates that only jobs on the local node can be selected.

destid
Specifies the name of a node, or an alias for the name of a node, from which jobs can be selected.

Note: If destid is used, it must be previously defined on a DESTID statement in the initialization stream.

Nnnnn|nodename
Indicates that only jobs which are to run on the specifically indicated node(s) can be selected. The nodes can be specified using the binary node identifier (nnnn) or the EBCDIC nodename.

SCHenv=schenv
Specifies the 1 to 16 byte scheduling environment. Only those job with this SCHENV will be selected.

SRVclass=srvclass
Specifies the 1 to 8 byte service class name. Only those jobs with this service class will be selected.

START={No|Yes}
Specifies the initial status of this transmitter when its corresponding offload device is started for a transmit operation, that is when a $S OFFLOAD(n),TYPE=TRANSMIT command is issued.

No
Indicates that this transmitter is not started when a corresponding $S OFFLOAD(n) command is issued. This transmitter can later be started individually by issuing the $S OFF(n).JT command and stopped, as required, by issuing the $P OFF(n).JT command.

Yes
Indicates that this transmitter is started when a corresponding $S OFFLOAD(n) command is issued.

STATUS
Specifies that the status of the offload job transmitter is to be displayed.

SYSaff
Specifies the member affinity for jobs that are selected for offloading.

Volume
Specifies the 5- or 6-character volume serial of a volume containing a spool data set. Only jobs using tracks on this volume(s) can be selected for dumping. As many as four volumes can be specified.

WS
Specifies the job selection criteria for this device. If a criterion is specified in the work selection list, job selection is based on the corresponding parameter specification on this initialization statement.

Authority Required

This command requires **display** authority. The description of the $T INTRDRnn command explains how to ensure the proper MVS system command group authority is assigned.

Scope

Single Member. The command will be in effect for this member only.

Messages

The $HASP884 message is issued in response to this command.

Example

```
1  $d off1.jt

$HASP884 OFF1.JT  STATUS=STARTABLE,CLASS=ABCDEFGH,CREATOR=,
```

```
 $HASP884          DISP=DELETE,HOLD=,JOBNAME=,LIMIT=(0,*),
 $HASP884          NOTIFY=NO,RANGE=(J1,65534),ROUTECDE=(),
 $HASP884          START=YES,SYSAFF=(),VOLUME=(,,,),WS=(CL/)
```

2

```
$doff1.jt

$HASP884 OFF1.JT
$HASP884 OFF1.JT STATUS=STARTABLE,CLASS=ABCDEFGH,CREATOR=,
$HASP884 DISP=DELETE,HOLD=,JOBNAME=,LIMIT=(0,*),
$HASP884 NOTIFY=NO,RANGE=(J1,65534),ROUTECDE=(),
$HASP884 START=YES,SCHENV=,SRVCLASS=,SYSAFF=(),
$HASP884 VOLUME=(,,,),WS=(CL/)
```

$D OFF.SR - Display Offload SYSOUT Receiver

Function

Display the offload SYSOUT receiver associated with an individual offload device.

Syntax

```
►►──$D──OFF──┬──────────────────────────────┬──.SR──┬──────────────────────────────┬──►
             │ nn ┬──────────┬               │       │ Selection limiting keywords  │
             │    └─-──┬────┬─┘               │       └──────────────────────────────┘
             │         │ mm │                 │
             │         └─*──┘                 │
             │   ┌──────────────────────┐     │
             │   ▼                      │     │
             └──(──┬────┬──┬──────────┬──┬──)──┘
                   │ nn │  │ -──┬────┬─┘  │
                   └─*──┘  │    │ mm │    │
                           │    └─*──┘    │
                           └──────────────┘

►──┬──────────────────────────────┬──►◄
   │ Display limiting keywords    │
   └──────────────────────────────┘
```

Display limiting keywords:

```
├──┬─────────┬──┬──────────┬──┬──────────┬──┬──────────┬──┬─────────┬──┬──────────►
   │ ,Burst  │  │ ,CReator │  │ ,┬─C───┬─┬  │ ,┬─FLash─┬─┬  │ ,Forms │  │ ,Hold   │  │ ,JOBname │
   └─────────┘  └──────────┘  │  └─FCB─┘ │  │  └─O─────┘ │  └─────────┘  └─────────┘  └──────────┘

►──┬──────────────────────────────┬──┬──────────┬──┬──────────┬──┬──────────┬──┬──────────┬──►
   │ ,MOD┬──────────────────────┬─┬  │ ,NOTify  │  │ ,OUTDisp │  │ ,PRMode  │  │ ,Queue   │  │ ,RANGE   │
   │     │ ┌──────────────────┐ │ │  └──────────┘  └──────────┘  └──────────┘  └──────────┘  └──────────┘
   │     │ ▼                  │ │ │
   │     └─=(──┬─Burst────────┬─)─┘
   │           ├─FCB──────────┤
   │           ├─┬─FLash─┬────┤
   │           │ └─O─────┘    │
   │           ├─Forms────────┤
   │           ├─Hold─────────┤
   │           ├─OUTDisp──────┤
   │           ├─PRMode───────┤
   │           ├─Queue────────┤
   │           ├─Routecde─────┤
   │           ├─┬─T───┬──────┤
   │           │ └─UCS─┘      │
   │           └─Writer───────┘
   └──────────────────────────────┘

►──┬──────────┬──┬──────────┬──┬──────────┬──┬──────────┬──┬──────────┬──┬──────────┬──►
   │ ,Routecde│  │ ,START   │  │ ,STATUS  │  │ ,┬─T───┬─┬  │ ,Writer  │  │          │
   └──────────┘  └──────────┘  └──────────┘  │  └─UCS─┘ │  └──────────┘  └──────────┘
                                             └──────────┘

►──┬──────────┬──┬──────────┬──┬──────────┬──┬──────────┬──┬──────────┬──┬──────────┬──┤
   │ ,WS      │  │          │  │          │  │          │  │          │  │          │
   └──────────┘  └──────────┘  └──────────┘  └──────────┘  └──────────┘  └──────────┘  └──────────┘
```

Selection limiting keywords:

```
├──┬──────────────────────────────┬──┬──────────────────────────────┬──►
   │ ,┬──────┬─Burst─┬─=──┬──────┬─┬  │ ,┬─────────┬─C─────┬──┬─=───┬─┬  │
   │  │ /    │       │ ^= │ ┬─No─┬ │ │  │ │ /       │       │  │ ^=  │ │  │
   │  └──────┘       └────┘ │ Yes│ │ │  │ └─────────┴─FCB───┘  │ >   │ │  │
   │                        └────┘ │ │  │   /                  │ <   │ │  │
   │                               │ │  │                      └─────┘ │  │
   │                               │ │  │                              │  │
   └──────────────────────────────┘ │  └──────────────────────────────┘  │
                                    └────────────────────────────────────┘
```

```
►──┬──────────────────────────────────────────────────────────────────────────────────────────────────────────────────────────────────►
   │ ,──┬──┬──┬──┬──FLash──┬──┬──┬──┬
```

No
Indicates that the printed output is not to be burst into separate sheets.

Yes
Indicates that the printed output is to be burst into separate sheets.

CReator
Specifies the 1 to 8 character userid whose output is to be loaded from the offload data set.

FCB|C=fcb
Specifies the 1 to 4 character name forms control image buffer or carriage control tape.

If you allow this parameter to default, JES2 can select all output, regardless of its FCB, for loading.

FLash|O=flash
Specifies a 1 to 4 character flash name for output loaded from the offload data set.

If you allow this parameter to default, JES2 can select all output, regardless of the flash specification, for loading.

Forms=forms
Specifies the 1 to 8 character forms specification for which output is selected.

Hold={No|Yes}
Specifies whether output for held jobs are to be reloaded.

If you allow this parameter to default and HOLD is not in the work selection list, JES2 can select all output, whether held or not, for reloading. If you allow this parameter to default and HOLD is in the work selection list, no output can be reloaded.

No
Specifies that output from held jobs cannot be selected by this device.

Yes
Specifies that output from held jobs can be selected by this device.

JOBname=jobname
Specifies the 1 to 8 character job name of the job(s) to be loaded from the offload data set.

MOD
Specifies those characteristics of the post-execution jobs that are to be automatically modified when post-execution jobs are loaded from the offload data set.

Burst=Yes|No
Specifies whether job output from this device is to be burst (page-separated).

FCB=fcb
Specifies a valid forms control buffer image or carriage control tape for output loaded from the offload data set.

FLash|O=flash
Specifies a valid flash name for output loaded from the offload data set.

Forms=forms
Specifies a valid forms name for output loaded from the offload data set.

Hold=No|Yes
Specifies whether all jobs are held after loading.

No
Specifies that all jobs are released prior to output processing.

Yes
Specifies that all jobs are held prior to output processing.

OUTDisp
Specifies that output selected by this offload SYSOUT receiver should have its disposition changed to this value. You can specify one of the following valid dispositions:

HOLD|H
Hold the output. JES2 does not process the output until you either change the disposition to WRITE or KEEP, or release the output. When the output is released, the disposition changes to WRITE.

Note: This specification is honored when the output reaches the destination node.

KEEP|K
Process the output, then keep a copy of it on spool. After processing, the disposition of this output becomes LEAVE.

LEAVE|L
JES2 does not process the output until you change the disposition to WRITE or KEEP, or release the output. When the output is released, the disposition changes to KEEP.

WRITE|W
Process the output then purge it.

This modification defaults to the current disposition.

PRMode=prmode
Specifies a valid processing mode for output loaded from the offload data set.

Queue=queue
Specifies a valid output class (A-Z, 0-9) for all output loaded from the offload data set. A maximum of 15 classes can be specified on this parameter. If you need to exceed the limit of 15 classes, specify Queue=, (that is, null) and do not code Queue in the WS= list on this statement; this allows **all** defined classes to be reloaded.

Routecde
Specifies a destination for all output loaded from the offload data set.

UCS|T=ucs
Specifies a valid print train or character arrangement table for all output loaded from the offload data set.

Writer=writer
Specifies an external writer name for output loaded from the offload data set.

NOTify={No|Yes}
Specifies whether a notification message is sent to the userid specified on either the JOB statement or the /*NOTIFY control statement.

No
Indicates that a notification message is not sent when a post-execution job is offloaded to the offload data set.

Yes
Indicates that a notification message is sent when a post-execution job is offloaded to the offload data set.

OUTDisp=(disposition[,...disposition])
Specifies the disposition(s) that the output must have in order to be eligible for processing by this offload receiver. The operator can specify one to four of the following valid dispositions:

HOLD|H
Hold the output. JES2 does not process the output until you either change the disposition to WRITE or KEEP, or release the output. When the output is released, the disposition changes to WRITE.

KEEP|K
Process the output, then keep a copy of it on spool. After processing, the disposition of this output becomes LEAVE.

LEAVE|L
JES2 does not process the output until you change the disposition to WRITE or KEEP, or release the output. When the output is released, the disposition changes to KEEP.

WRITE|W
Process the output then purge it.

See *z/OS JES2 Initialization and Tuning Guide* for more information about specifying output disposition and how JES2 determines output disposition defaults.

PRMode=(vvvvvvvv[,vvvvvvvv...])
Specifies the processing mode for which output can be selected. Use commas to separate individual processing modes and enclose the list in parenthesis if more than one processing mode is specified. Wildcard specifications are allowed on this parameter.

If you allow this parameter to default, JES2 can select all output, regardless of its processing mode, for loading.

Queue=queue
Specifies the class(es) for which output can be selected. As many as 15 classes can be specified.

If you allow this parameter to default, JES2 can select all output, regardless of its class, for loading.

RANGE={J|S|T} nnnnnn[-nnnnnn]|J1-2147483647
Specifies the range (1-2147483647) of IDs for jobs (J), started tasks (S), or TSUs (T) of those jobs that can be loaded from the offload data set. If you code this parameter, you can specify one or two values:

- If you specify one value, that value becomes both the low and the high end of the range.
- If you specify two values, the first value is the low end of the range and the second value the high end. The two values can be equal. If they are not equal, the second value must be larger than the first value.

Routecde

Specifies a destination for a piece of output. Its meaning depends on whether it is used as a subparameter of MOD= or not:

- If it is **not** used as a subparameter of MOD=, Routecde= means that output sent to the specified destination(s) can be selected.
- If Routecde= is used as a subparameter of the MOD= parameter, it specifies the destination(s) to which you want this output to go.

The maximum size of a route code is 18 characters. Use parentheses if more than one route code is specified. You can specify a route code in any of the forms listed. Note that a slash, a colon, or a matched set of parentheses can be used instead of a period anywhere a period appears as a separator in a route code. For example, you could specify node.remote, node:remote, node/remote, or node(remote) for an explicit route code. Wildcard specifications are allowed on this parameter for userids only.

node
NnnnnnRmmmmm
Ummmmm
destid
node.remote
node.user
node.Ummmmm
node.destid
remote
user
node.*
*

statement in the initialization stream. Explanations of the different forms of specifying route codes follow:

LOCAL|ANYLOCAL
Indicates routing to the local node.

Nnnnnn
Indicates routing to the node specified by its binary node identifier. The value specified for nnnnn can range from 1 to 32767.

destid
Indicates routing to the specified node(s). You can specify the name of a node, or an alias for the name of a node, for destid.

nodename
Indicates routing to the node specified by its EBCDIC node name.

NnnnnnRmmmmm
Indicates routing to the remote Rmmmmm at the node Nnnnnn. If the node is the local node, Nnnnnn may be omitted. Values specified for both nnnnn and mmmmm can range from 1 to 32767.

Note: NnnnnnRmmmmm is restricted to a maximum of eight characters. Therefore, the combined number of digits *nnnnn* plus *mmmmm* cannot exceed six. Valid combinations are NnnnnnRmm, NnnnRmmm, NnnRmmmmm.

Ummmmm
Indicates special local routing. The special routing numbers range from 1 to 32767.

destid
Indicates routing to the specified node(s). If destid is specified alone, it refers to both the node and the remote.

node.remote
Indicates routing to a remote at the specified node.

node.user
Indicates routing to a user at the specified node.

node.Ummmmm
Indicates special local routing at the specified node. The special routing numbers range from 1 to 32767.

node.destid
Indicates a destination at the specified node. The destid refers to both the node and the remote. The node specified in the destid must be the same as the node portion of the route code.

remote
Indicates routing to a remote. Remote can be specified in any of the following ways:

Rmmmmm
Indicates routing to the specified remote. Rmmmmm can also be specified as RMmmmmm or RMTmmmmm. The value specified for mmmmm can range from 1 to 32767.

destid
Indicates routing to a destid referring to a remote.

user
Indicates routing to a specified userid.

If Routecde= is not used as a subparameter of MOD=, a generic userid can be specified. A generic userid is a userid that ends in an asterisk (*), and refers to all userids that begin with any characters preceding the *. Note that the * can only be specified in the last position of the userid.

A userid at the local node must be in the form of a valid TSO/E userid. It must begin with an alphabetic (A-Z) or a special character (@ # or $) and the remaining characters can be alphabetic, numeric, or special characters. Userids at non-local nodes may contain any characters except separators (a period, a colon, a slash, or a set of parentheses), delimiters (a comma, or a blank), or an asterisk (*).

node.*
If Routecde= is not used as a subparameter of MOD=, node.* indicates that all output destined for the specified node is selected, regardless of the userid or remote specified. If Routecde= is used as a subparameter of MOD=, node.* indicates that the node name is to be modified to the specified node name, but the remote node will remain the same.

*****
If Routecde= is not used as a subparameter of MOD=, * indicates that all output specified for the local node is selected, regardless of the userid or remote specified. If Routecde is used as a subparameter of MOD=, * indicates that the node number will be changed to the local node. However, the remote number originally specified will remain the same.

STATUS
Specifies that the status of the offload sysout receiver is to be displayed.

START=Yes|No
Specifies the initial status of this receiver when its corresponding offload device is started for a receive operation, that is when a $S OFFLOAD(n),TYPE=RECEIVE command is issued.

No
Indicates that this receiver is not started when a corresponding $S OFFLOAD(n) command is issued. This receiver can later be started individually by issuing the $S OFF(n).SR command and stopped, as required, by issuing the $P OFF(n).SR command.

Yes
Indicates that this receiver is started when a corresponding $S OFFLOAD(n) command is issued.

Modification: $S OFF(n).SR operator command or $T OFF(n).SR operator command.

UCS|T=ucs
Specifies the 1 to 4 character print train (universal character set) for output to be dumped.

If you allow this parameter to default, JES2 can select all output, regardless of its UCS, for loading.

Writer=writer
Specifies the 1 to 8 character writer name for which output can be selected.

If you allow this parameter to default, JES2 can select all output, regardless of its writer, for loading.

WS
Specifies the selection criteria for this device. If a criterion is specified in the work selection list, output selection is based on the corresponding parameter specification on this initialization statement.

Authority Required

This command requires **display** authority. The description of the $T INTRDRnn command explains how to ensure the proper MVS system command group authority is assigned.

Scope

Single Member. The command will be in effect for this member only.

Messages

The $HASP885 message is issued in response to this command.

Example

1 `$d off.sr`

```
$HASP885 OFF1.SR  STATUS=STARTABLE,OUTDISP=(WRITE,HOLD,KEEP,
$HASP885          LEAVE),CREATOR=,HOLD=,JOBNAME=,MOD=(BURST=,
$HASP885          OUTDISP=,FCB=,FLASH=,FORMS=,HOLD=,PRMODE=,
$HASP885          QUEUE=,ROUTECDE=,UCS=,WRITER=),NOTIFY=NO,
$HASP885          RANGE=(J1,2147483647),ROUTECDE=(),START=YES,
$HASP885          WS=(OUTD/),BURST=,FCB=,FLASH=,FORMS=(,,,,,,,),
$HASP885          PRMODE=(),QUEUE=,UCS=,WRITER=
```

$D OFF.ST - Display Offload SYSOUT Transmitter

Function

Display Offload SYSOUT transmitter associated with an individual offload device.

Syntax

```
►►──$D──OFF──┬──────────────────────────────┬──.ST──┬──────────────────────────────┬──►
             │ nn ┬──────────┬               │       │ Selection limiting keywords  │
             │    └─ - ─ mm ─┘               │       └──────────────────────────────┘
             │    │    └─ * ─┘               │
             │    │   ┌──────────────────┐   │
             │    │   ▼                  │   │
             └────└──( ─ nn ┬──────────┬ ─ ┘─ ) ─┘
                            │ *        │
                            └─ - ─ mm ─┘
                            │    └─ * ─┘
```

```
►──┬──────────────────────────────┬──────────────────────────────────────────►◄
   │ Display limiting keywords    │
   └──────────────────────────────┘
```

Display limiting keywords:

```
├──┬──────────┬──┬──────────┬──┬──────────┬──┬──────────┬──┬──────────┬──►
   │ ,Burst   │  │ ,CReator │  │ ,DISP    │  │ ,┬─C───┬─┬  │ ,┬─FLash─┬─┬  │ ,Forms   │  │ ,Hold    │
   │          │  │          │  │          │  │  └─FCB─┘ │  │  └─O─────┘ │  │          │  │          │
```

```
►──┬──────────┬──┬──────────┬──┬──────────┬──┬──────────┬──┬──────────┬──┬──────────┬──┬──────────┬──►
   │ ,JOBname │  │ ,LIMit   │  │ ,NOTify  │  │ ,OUTDisp │  │ ,PLIM    │  │ ,PRMode  │  │ ,Queue   │  │ ,RANGE   │
```

```
►──┬──────────┬──┬──────────┬──┬──────────┬──────────────────────────────►
   │ ,Routecde│  │ ,START   │  │ ,STATUS  │
```

```
►──┬──────────┬──┬──────────┬──┬──────────┬──┬──────────┬──────────────────┤
   │ ,┬─T───┬─┬  │ ,Volume  │  │ ,Writer  │  │ ,WS      │
   │  └─UCS─┘ │  │          │  │          │  │          │
```

Selection limiting keywords:

```
├──┬──────────────────────────────┬──┬──────────────────────────────────►
   │ ,┬─────┬─Burst─┬─=─┬─┬─No──┬─┬  │ ,┬─────┬─DISP─┬─=─┬─┬─DELETE─┬─┬  │
   │  │ /   │       │ ê=│ │ Yes │ │  │  │ /   │      │ ê=│ │ HOLD   │ │  │
   │  └─────┘       └───┘ └─────┘ │  │  └─────┘      └───┘ │ KEEP   │ │  │
   │                               │  │                     └────────┘ │  │
```

```
►──┬──────────────────────────────┬──┬──────────────────────────────────►
   │ ,┬─────┬─┬─C───┬─┬─=─┬─┬─fcb─┬─┬  │ ,┬─────┬─┬─FLash─┬─┬─=─┬─┬─flash─┬─┬  │
   │  │ /   │ │     │ │ ê=│ │     │ │  │  │ /   │ │       │ │ ê=│ │       │ │  │
   │  │     │ └─FCB─┘ │ >│ │     │ │  │  │     │ └─O─────┘ │ >│ │       │ │  │
   │  │     │   /   │ │ <│ │     │ │  │  │     │   /   │ │ <│ │       │ │  │
   │  └─────┘       └─┴──┴─┴─────┴─┘  │  └─────┘       └─┴──┴─┴───────┴─┘  │
```

```
►──┬──────────────────────────────┬──┬──────────────────────────────────►
   │ ,┬─────┬─Forms─┬─=─┬─┬─forms──────────┬─┬  │ ,┬─────┬─Hold─┬─=─┬─┬─No──┬─┬  │
   │  │ /   │       │ ê=│ │                │ │  │  │ /   │      │ ê=│ │ Yes │ │  │
   │  └─────┘       └───┘ │  ┌──────────┐  │ │  │  └─────┘      └───┘ └─────┘ │  │
   │                      │  ▼ ,       │  │ │  │                               │  │
   │                      └──( ─ forms ─┘ ─ ┘─┘  │                               │  │
   │                          (1)               │                               │  │
   └──────────────────────────────────────────────┘                               └──┘
```

```
►──┬──────────────────────────────┬──┬──────────────────────────────────►
   │ ,┬─────┬─JOBname─┬─=─┬─┬─jobname─┬─┬  │ ,┬─────┬─NOTify─┬─=─┬─┬─No──┬─┬  │
   │  │ /   │        │ ê=│ │         │ │  │  │ /   │        │ ê=│ │ Yes │ │  │
   │  └─────┘        └───┘ │         │ │  │  └─────┘        └───┘ └─────┘ │  │
   │                       │ >│ │     │ │  │                               │  │
   │                       │ <│ │     │ │  │                               │  │
   └───────────────────────┴──┴─┴─────┴─┘  └───────────────────────────────┘  └──┘
```

```
►─┬─────────────────────────────────────────────────────────────────────────────────────────────────────────────────►
  │ ,┌─┐ Queue┬─=──┬queue┐  │ ,┌─┐ START┬─=──┬─┬No┬─┐  │ ,┌─┐ STATUS┐
  │  └─┘/─┘      │ê=──┤     │  └─┘/─┘      │ê=─┤ └Yes┘│  └─┘/─┘
  │              │>───┤     │               │   │      │
  │              └<───┘     │               └───┘      │
►─┴─────────────────────────────────────────────────────────────────────────────────────────────────────────────────┤
  │ ,┌─┐ T┬─┬─=──┬ucs┐  │ ,┌─┐ Writer┬─=──┬writer┐
  │  └─┘/─┘ │ê=──┤     │  └─┘/─┘       │ê=──┤      │
  │         │>───┤     │               │>───┤      │
  │         └<───┘     │               └<───┘      │
  │       └─┬─┬UCS┐    │
  │         └─┘/─┘      │
```

Notes:

1 *forms* can be coded up to 8 times

Parameters

Burst={No|Yes}
Specifies the burst specification for which output is selected.

If you allow this parameter to default, JES2 can select all output, regardless of its burst specification, for transmission.

No
Indicates that the printed output is not to be burst into separate sheets.

Yes
Indicates that the printed output is to be burst into separate sheets.

CReator
Specifies the 1 to 8 character userid whose output is to be offloaded to the offload data set.

DISP={KEEP|HOLD|DELETE}
Specifies the disposition of all output that is selected for offload to the offload data set as follows:

KEEP
Indicates that selected output will not change status after offloading to the offload data set.

HOLD
Indicates that selected held output remains held after offloading to the offload data set, or HOLD indicates that selected non-held output is marked as non-selectable after offloading to the offload data set. The operator must issue a $T O command to release jobs specified here as “HOLD”.

Note: Marking this output as non-selectable is not the same as putting a job in HOLD status.

DELETE
Indicates that the selected output groups are deleted after offloading to the offload data set.

C|FCB=fcb
Specifies the 1 to 4 character name forms control image buffer or carriage control tape.

FLash|O=flash
Specifies the 1 to 4 character name of a particular flash for which output is selected.

Forms=forms
Specifies the 1 to 8 character forms specification for which output is selected.

Hold={No|Yes}
Specifies whether SYSOUT for held jobs can be transmitted to the offload data set. Output for held jobs is output from jobs that the operator placed on hold using the $H command.

If you allow this parameter to default and HOLD is not in the work selection list, JES2 can select all output, whether held or not, for transmission. If you allow this parameter to default and HOLD is in the work selection list, no output can be transmitted.

No
Specifies that output for held jobs cannot be transmitted to the offload data set.

Yes
Specifies that output for held jobs can be transmitted to the offload data set.

JOBname=jobname
Specifies the 1 to 8 character job name of the job(s) to be offloaded to the offload data set. Wildcard specifications are allowed on this parameter.

LIMit
Specifies the amount of output (in records) for which output can be selected.

NOTify={No|Yes}
Specifies whether a notification message is sent to the userid specified on either the JOB statement or the /*NOTIFY control statement.

No
Indicates that a notification message is not sent when a post-execution job is offloaded to the offload data set.

Yes
Indicates that a notification message is sent when a post-execution job is offloaded to the offload data set.

OUTDisp
Specifies the disposition(s) that the output must have in order to be eligible for processing by this offload transmitter.

PLIM
Specifies the amount of output (in pages) for which output can be selected.

PRMode
Specifies the processing mode for which output can be selected.

Queue=queue
Specifies the class(es) (A-Z, 0-9) for which output can be selected. A maximum of 15 classes can be specified on this parameter. If you need to exceed the limit of 15 classes, specify Queue=, (that is, null) and do not code Queue in the WS= list on this statement; this allows **all** defined classes to be transmitted.

RANGE={J|S|T} nnnnnn[-nnnnnn]|J1-65534
Specifies the job ID range (J), started task range (S), or TSU range (T) of those jobs that can be loaded from the offload data set. Use the Jnnnnn form for job routing, the Snnnnn form for STC routing, and the Tnnnnn form for TSU job routing.

Routecde

Specifies the one to four destination selection criteria for which output can be selected. If more than one route code is specified, enclose the list in parentheses.

The maximum size of a route code is 18 characters.

Explanations of the different forms of specifying route codes follow:

LOCAL|ANYLOCAL
Indicates that output routed to the local node is selected.

Nnnnnn
Indicates that output routed to the node specified by its binary node identifier is selected. The value specified for nnnnn can range from 1 to 32767.

destid
Indicates that output routed to the specified node(s) is selected. You can specify the name of a node, or an alias for the name of a node, for destid.

nodename
Indicates that output routed to the node specified by its EBCDIC node name is selected.

NnnnnnRmmmmm
Indicates that output routed to the remote Rmmmmm at the node Nnnnnn is selected. If the node is the local node, Nnnnnn may be omitted. Values specified for both nnnnn and mmmmm can range from 1 to 32767.

Note: NnnnnnRmmmmm is restricted to a maximum of eight characters. Therefore, the combined number of digits *nnnnn* plus *mmmmm* cannot exceed six. Valid combinations are NnnnnnRmm, NnnnRmmm, NnnRmmmmm.

Ummmmm
Indicates that output for special local routing is selected. The special routing numbers range from 1 to 32767.

destid
Indicates that output routed to the specified node(s) is selected. If destid is specified alone, it refers to both the node and the remote.

node.remote
Indicates that output routed to a remote at the specified node is selected.

node.user
Indicates that output routed to a user at the specified node is selected.

node.Ummmmm
Indicates that output for special local routing at the specified node is selected. The special routing numbers range from 1 to 32767.

node.destid
Indicates that output to be routed to a destination at the specified node is selected. The destid refers to both the node and the remote. The node specified in the destid must be the same as the node portion of the route code.

remote
Indicates that output routed to a remote is selected. Remote can be specified in any of the following ways:

Rmmmmm
Indicates that output routed to the specified remote is selected. Rmmmmm can also be specified as RMmmmmm or RMTmmmmm. The value specified for mmmmm can range from 1 to 32767.

destid
Indicates that output routed to a destid referring to a remote is selected.

user
Indicates that output routed to a userid, or a generic userid, is selected. A generic userid is a userid that ends in an asterisk (*), and refers to all userids that begin with any characters preceding the *. Note that the * can only be specified in the last position of the userid.

A userid at the local node must be in the form of a valid TSO/E userid. It must begin with an alphabetic (A-Z) or a special character (@ # $), and the remaining characters may be alphabetic, numeric, or special characters. Userids at non-local nodes may contain any characters except separators (a period, a colon, a slash, or a set of parentheses), delimiters (a comma, or a blank), or an asterisk (*).

node.*
Indicates that all output destined for the specified node is selected, regardless of the userid or remote specified.

***** Indicates that all output specified for the local node is selected, regardless of the userid or remote specified.

If you allow this parameter to default, JES2 can select all output, regardless of the route code, for transmission.

START={No|Yes}
Specifies the initial status of this transmitter when its corresponding offload device is started for a transmit operation, that is when a $S OFFLOAD(n),TYPE=TRANSMIT command is issued.

No
Indicates that this transmitter is not started when a corresponding $S OFFLOAD(n) command is issued. This transmitter can later be started individually by issuing the $S OFF(n).ST command and stopped, as required by issuing the $P OFF(n).ST command.

Yes
Indicates that this transmitter is started when a corresponding $S OFFLOAD(n) command is issued.

STATUS
Specifies that the status of the offload SYSOUT transmitter is to be displayed.

UCS|T=ucs
Specifies the 1 to 4 character print train (universal character set) for output to be transmitted.

Volume
Specifies the 5 or 6 character volume serial of a volume containing a spool data set. Only jobs using tracks on this volume(s) can be selected for dumping. As many as four volumes can be specified. Use commas to separate individual volume IDs and enclose the list in parenthesis if more than one ID is specified.

Writer=writer
Specifies the 1 to 8 character writer name for which output can be selected.

WS
Specifies the selection criteria for this device. If a criterion is specified in the work selection list, output selection is based on the corresponding parameter specification on this initialization statement. If the criterion is not listed here, the criterion is not considered during work selection.

Authority Required

This command requires **display** authority. The description of the $T INTRDRnn command explains how to ensure the proper MVS system command group authority is assigned.

Scope

Single Member. The command will be in effect for this member only.

Messages

The $HASP886 message is issued in response to this command.

Example

```
1  $d off1.st

$HASP886 OFF1.ST  STATUS=STARTABLE,CREATOR=,DISP=DELETE,
$HASP886          OUTDISP=(),HOLD=,JOBNAME=,NOTIFY=NO,RANGE=(J1,
$HASP886          65534),ROUTECDE=(),START=YES,VOLUME=(,,),
$HASP886          WS=(OUTD/),BURST=,FCB=,FLASH=,FORMS=(,,,,,,,),
$HASP886          LIMIT=(0,*),PLIM=(0,*),PRMODE=(),QUEUE=,UCS=,
$HASP886          WRITER=
```

$D OFFLOAD - Display Offload Devices

Function

Display JES2 offload devices.

Syntax

```
►►──$D──OFFLOAD──┬──┬──nn──┬──────────┬──┬──────────────────────────────────────►
                 │  │      └─-──┬──mm──┘  │  └┤ Selection limiting keywords ├┘
                 │  │           └──*───┘  │
                 │  │   ┌──,──────────────┐│
                 │  │   ▼                 │
                 │  └──(──┬──nn──┬──┬──────┬──┬──mm──┬──)──┘
                 │        └──*───┘  └─-──┬──┘  └──*───┘
                 │                       └──*───┘
►──┬──────────────────────────────────────────────────────────────────────────►◄
   └┤ Display limiting keywords ├┘
```

Display limiting keywords:

```
├──┬──────────────┬──┬──────┬──┬──────────┬──┬──────────┬──┬──────────┬──┬──────►
   └─,ARCHIVE─────┘  └─,DSN─┘  └─,LABEL───┘  └─,PROTECT─┘  └─,RETPD───┘  └─,STATUS─┘  └─,TYPE───┘  └─,TRACE───┘

►──┬──────────┬──┬──────────────┬──┬──────────┬──┤
   └─,UNIT────┘  └─,VALIDATE────┘  └─,VOLS────┘
```

Selection limiting keywords:

```
├──┬──────────────────────────────┬──┬──────────────────────────┬──┬──────────────────────────────►
   │ ┌──────┐   ┌──────┐   ┌──┐   │  │ ┌──────┐   ┌──────┐   ┌──┐ │  │ ┌──────┐   ┌──────┐   ┌──┐ │
   └─,─┬──/───┬─DSN─┬──=───┬─dsn─┘  └─,─┬──/───┬─LABEL─┬──=───┬─AL──┬─┘  └─,─┬──/───┬─PROTECT─┬──=───┬─No──┬─┘
       │      │     ├──^=──┤     │     │      │       ├──^=──┤ AUL │    │     │      │         ├──^=──┤ Yes │
       │      │     ├──>───┤     │     │      │       └──<───┘ BLP │    │     │      │         └──<───┘     │
       │      │     └──<───┘     │     │      │                NL  │    │     │      │                      │
       │      │                  │     │      │                NSL │    │     │      │                      │
       │      │                  │     │      │                SL  │    │     │      │                      │
       │      │                  │     │      │                SUL │    │     │      │                      │

►──┬──────────────────────────────┬──┬──────────────────────────┬──┬──────────────────────────────►
   │ ┌──────┐   ┌──────┐   ┌──┐   │  │ ┌──────┐   ┌──────┐   ┌──┐ │  │ ┌──────┐   ┌──────┐   ┌──┐ │
   └─,─┬──/───┬─RETPD─┬──=───┬─retpd─┘  └─,─┬──/───┬─STATUS─┘  └─,─┬──/───┬─TRACE─┬──=───┬─No──┬─┘
       │      │       ├──^=──┤       │     │      │        │     │      │       ├──^=──┤ Yes │    │
       │      │       ├──>───┤       │     │      │        │     │      │       └──<───┘     │    │
       │      │       └──<───┘       │     │      │        │     │      │                    │    │

►──┬──────────────────────────────┬──┬──────────────────────────┬──┤
   │ ┌──────┐   ┌──────┐   ┌──┐   │  │ ┌──────┐   ┌──────┐   ┌──┐ │
   └─,─┬──/───┬─TYPE──┬──=───┬──┬─┘  └─,─┬──/───┬─VALIDATE─┬──=───┬─No──┬─┘
       │      │       ├──^=──┤  │    │     │      │          ├──^=──┤ Yes │
       │      │       │      │  │    │     │      │          └──<───┘     │
       │      │       │      │  │    │     │      │                       │
       │      │       │      │  │    │     │      │                       │
       │      │       │      │  │    │     │      │                       
```

LABEL={AL|AUL|BLP|NL|NSL|SL|SUL }
Specifies the type of label processing that is required for the tape that is to be allocated for a non-cataloged spool offload data set.

AL
American National Standard label

AUL
American National Standard label and American National Standard user-defined label

BLP
Bypass label processing

NL
No Label

NSL
Non-standard label

SL
IBM Standard label

SUL
IBM standard label and user-defined label

PROTECT={No|Yes}
Specifies whether the spool offload dataset requires System Authorization Facility (SAF) protection.

RETPD=retpd
Specifies the retention period (1-9999), in days, if the offload dataset is to be retained.

STATUS
Indicates that the status of the offload device is to be displayed.

TRACE={No|Yes}
Displays whether or not trace records are to be cut for data read or written by this offload device. See specific trace ids for more infomation.

TYPE=}TRANSMIT|RECEIVE}
Indicates whether the offload device is in the process of offloading jobs to an offload data set (TYPE=TRANSMIT) or reloading jobs from an offload data set (TYPE=RECEIVE).

VALIDATE={No|Yes}
Specifies the action JES2 takes if it determines that the first record of the offload data set is not LRECL=80.

VOLS=vols
Specifies the volume count (1-255) to be used for the spool offload dataset.

Authority Required

For a description of assigning command input authority, see *z/OS JES2 Initialization and Tuning Guide*.

Scope

Single Member. See *z/OS MVS System Commands* for more information on using the ROUTE *ALL command.

Messages

The $HASP882 message is issued in response to this command.

Example

1 `$DOFFLOAD1`

```
$HASP882 OFFLOAD1  DSN=OFFLOAD1.DATASET,STATUS=DRAINED,
$HASP882           ARCHIVE=ONE,LABEL=SL,PROTECT=NO,RETPD=30,
$HASP882           TRACE=NO,UNIT=(161,1),VALIDATE=YES,VOLS=255
```

JES2 provides information about offload devices.

$D OPTsdef - Display Start Options Processing Definitions

Function

Display JES2 start options.

Syntax

```
►►──$D──OPTsdef──┬──────────────┬──┬──────────┬──┬──────────┬──┬──────────────┬──┬──────────────┬──┬────────────────┬──►◄
                 └,HASPPARM─────┘  └,MEMBER───┘  └,SPOOL────┘  └,STARTopt───┘  └,STARTYPE───┘  └,UNACTIVATE──┘
```

Parameters

HASPPARM
Displays the name of the data definition (DD) statement that defines the data set containing the initialization statements that JES2 is to use for initialization.

MEMBER
Displays the member of the MVS default PARMLIB concatination containing the initialization statements that JES2 is to use for initialization.

SPOOL
Displays whether this member performed a spool validation on its last restart, and whether validation was forced.

STARTopt
Displays the type of start that was specified in the initialization options (FORMAT, COLD, WARM).

STARTYPE
Displays the type of start that was actually performed (FORMAT, COLD, ALL-MEMBER WARM, SINGLE-MEMBER WARM, QUICK, HOT).

UNACTivate
Displays whether or not the UNACTivate START PARM was specified.

Authority Required

This command requires **display** authority. The description of the $T RDRnn command explains how to ensure the proper MVS system command group authority is assigned.

This command requires **read** security access authority. For a description of assigning command input authority, see *z/OS JES2 Initialization and Tuning Guide*.

Scope

Single Member. The response to this command will be a display of information about this member only. You might want to use this command to get information about all members in the MAS. To do so, you can use the MVS ROUTE *ALL command to issue this command to all active members (if the JES2 command character is the same on all members). See *z/OS MVS System Commands* for more information on using the ROUTE *ALL command.

Messages

The $HASP820 message is issued in response to this command.

Example

1 `$d optsdef`

```
$HASP820 OPTSDEF  HASPPARM=HASPPARM,MEMBER=,SPOOL=NOVALIDATE,
$HASP820          UNACTIVATE=NO,STARTOPT=COLD,STARTYPE=COLD
```

JES2 provides information about the start options.

$D OUTCLASS - Display Output Classes

Function

Display output classes.

Syntax

```
►►──$D──OUTCLASS──┬─nn──┬──────────┬──┬──────────────────────────────┬──►
                  │     └─-──mm────┘  │  └┤ Selection limiting keywords ├┘
                  │       └─*────────┘  │
                  │   ┌──────────────┐  │
                  │   ▼              │  │
                  └─(──┬─nn──┬──┬──────┴──┬──────┬──)──┘
                       └─*───┘  └─-──mm───┘
                                  └─*──────┘

►──┬──────────────────────────────┬──────────────────────────────────────►◄
   └┤ Display limiting keywords ├┘
```

Display limiting keywords:

```
├──┬──────────────┬──┬──────────┬──┬──────────┬──┬──────────┬──────────────┤
   └─,BLNKTrnc────┘  └─,OUTDisp─┘  └─,OUTPUT───┘  └─,TRKCELL─┘
```

Selection limiting keywords:

```
├──┬──────────────────────────────────────────┬──┬──────────────────────────────────────────►
   └─,──┬──────┬──BLNKTrnc──┬──────┬──┬──No──┬──┘  └─,──┬──────┬──OUTPUT──┬──────┬──┬─DUMMY─┬──┘
        └─/────┘            └─ê=───┘  └─Yes─┘          └─/────┘          └─ê=───┘  ├─PRINT─┤
                                                                                   └─PUNCH─┘

►──┬──────────────────────────────────────┬──────────────────────────────────────┤
   └─,──┬──────┬──TRKCELL──┬──────┬──┬──No──┬──┘
        └─/────┘           └─ê=───┘  └─Yes─┘
```

Parameters

BLNKTrnc
Specifies whether (Yes) or not (No) JES2 truncates trailing blanks for non-page-mode data sets in this output class.

OUTDisp
Specifies the default output disposition for the SYSOUT data sets in this class, depending on the successful completion of the job.

OUTPUT[=DUMMY|PRINT|PUNCH]
Specifies the installations standard for output classes so that appropriate print and punch accounting can be maintained.

DUMMY
Specifies that JES2 is to process the output class as a dummy data set (the class will still be allocated spool space but will be marked nonprintable to JES2).

PRINT
Specifies that the output class is to be printed.

PUNCH
Specifies that the output class is to be punched.

TRKCELL={No|Yes}
Specifies that physical records of each data set of this SYSOUT class are to be specially grouped on the spool volume(s), and are to be read from the spool volume in blocks.

Authority Required

This command requires **display** authority.

This command requires **read** security access authority. For a description of assigning command input authority, see *z/OS JES2 Initialization and Tuning Guide*.

Scope

Single Member. The response to this command will be a display of information about this member only. You might want to use this command to get information about all members in the MAS. To do so, you can use the MVS ROUTE *ALL command to issue this command to all active members (if the JES2 command character is the same on all members). See *z/OS MVS System Commands* for more information on using the ROUTE *ALL command.

Messages

The $HASP842 message is issued in response to this command.

Example

1 `$D OUTCLASS`

```
$d outclass(a)
$HASP842 OUTCLASS(A)
$HASP842 OUTCLASS(A)  OUTPUT=PRINT,BLNKTRNC=YES,OUTDISP=(WRITE
$HASP842              WRITE),TRKCELL=YES
```

JES2 provides information about output classes.

$D OUTDEF - Display Output Definition Options

Function

Display output definitions.

Syntax

```
►►──$D──OUTDEF──┬──────────┬──┬──────────┬──┬──────────┬──┬──────────┬──┬──────────┬──┬──────────┬──►
                └,BRODCAST─┘  └,COPIES───┘  └,DMNDSET─┘  └,JOEFREE─┘  └,JOENUM──┘  └,JOERBLDQ┘

►──┬──────────┬──┬──────────┬──┬──────────┬──┬──────────┬──┬──────────┬──┬──────────┬──┬──────────┬──►
   └,JOEWARN──┘  └,OUTTIME──┘  └,PRTYHIGH─┘  └,PRTYLOW──┘  └,PRTYOUT─┘  └,PRYORATE┘  └,SEGLIM──┘

►──┬──────────┬──┬──────────┬──────────────────────────────────────────────────────────────────►◄
   └,STDFORM──┘  └,USERSET──┘
```

Parameters

BRODCAST
Specifies that shared broadcasting is in use (Yes) or not in use (No) by this multi-access spool complex.

Scope: MAS-Wide. This command can display information about jobs on any or all members of the MAS depending upon the parameters you provide.

COPIES
Specifies the maximum number (1-255) of job output copies that can be requested in the accounting field of your JOB statement or on a /*JOBPARM control statement.

Scope: Single Member. The response to this command will be a display of information about this member only.

DMNDSET
Specifies whether inline printer setup will be allowed for data sets whose SYSOUT class matches the job message class.

JOEFREE
The number of available job output elements.

Scope: MAS-Wide. This command can display information about jobs on any or all members of the MAS depending upon the parameters you provide.

JOENUM
Specifies the number (10-500000) of job elements (JOEs) to be generated.

Scope: MAS-Wide. This command can display information about jobs on any or all members of the MAS depending upon the parameters you provide.

JOERBLDQ
Displays YES if there are output elements on the rebuild queue.

Scope: MAS-Wide. This command can display information about jobs on any or all members of the MAS depending upon the parameters you provide.

JOEWARN
Specifies the percentage (0-100) of use of job output elements at which the operator will be alerted through message $HASP050.

Scope: MAS-Wide. This command can display information about jobs on any or all members of the MAS depending upon the parameters you provide.

OUTTIME
Specifies whether JES2 will save the time stamp that indicates the creation time of an output's JOE, or whether it will instead save the time when the JOE was last updated.

Scope: Single Member. The response to this command will be a display of information about this member only.

PRTYHIGH
Specifies the upper priority limit (0-255) to be associated with the JES2 job priority aging feature.

Scope: MAS-Wide. This command can display information about jobs on any or all members of the MAS depending upon the parameters you provide.

PRTYLOW
Specifies the lower priority limit (0-255) to be associated with the JES2 job priority aging feature.

Scope: MAS-Wide. This command can display information about jobs on any or all members of the MAS depending upon the parameters you provide.

PRTYOUT
Specifies whether the priority specification on the JCL OUTPUT statement is supported (Yes) or ignored (No).

Scope: Single Member. The response to this command will be a display of information about this member only.

PRYORATE
Specifies the number (0-1440) of time periods into which a 24-hour day is to be divided for use in increasing a job's output priority by the JES2 output priority aging feature.

Scope: MAS-Wide. This command can display information about jobs on any or all members of the MAS depending upon the parameters you provide.

SEGLIM
Specifies the maximum number of output segments (1-99999) JES2 creates for a SYSOUT data set.

Scope: Single Member. The response to this command will be a display of information about this member only.

STDFORM
Specifies 1 to 8 character identifier to be used as a default forms ID when a forms ID is not specified.

Scope: Single Member. The response to this command will be a display of information about this member only.

USERSET
Specifies whether the user is permitted (Yes) or not permitted (No) to create demand setup JOEs through the use of the JCL OUTPUT statement.

Scope: Single Member. The response to this command will be a display of information about this member only.

Authority Required

This command requires **display** authority.

This command requires **read** security access authority. For a description of assigning command input authority, see *z/OS JES2 Initialization and Tuning Guide*.

Scope

The scope of this command varies by parameter. See the description of each parameter for its scope.

The values supplied for some parameters on this command will be in effect across the entire MAS, while the values supplied for other parameters will be in effect for this member only.

Depending on your installation's setup, you might want the parameters for this command to be applied to all members of the MAS (to ensure a consistent environment across the MAS). If so, you can use the MVS ROUTE *ALL command to issue this command to all active members (if the JES2 command character is the same on all members). See *z/OS MVS System Commands* for more information on using the ROUTE *ALL command.

Messages

The $HASP836 message is issued in response to this command.

Example

```
1  $D OUTDEF
           $d outdef
           $HASP836 OUTDEF
$HASP836 OUTDEF  BRODCAST=NO,COPIES=255,DMNDSET=NO,JOENUM=200,
$HASP836         JOEFREE=198,JOEWARN=80,OUTTIME=CREATE,
$HASP836         PRTYLOW=0,PRTYHIGH=255,PRTYOUT=NO,PRYORATE=0,
$HASP836         SEGLIM=100,STDFORM=STD,USERSET=NO
```

JES2 provides information about output definitions.

$D OUTPRTY - Display Job Output Priority

Function

Display job output priority.

Syntax

```
►►──$D──OUTPRTY──┬─nn──┬──────┬──────────────────┬──┬──────────────────────────────►
                 │     └─-─┬─mm─┬─┘                │  │ Selection limiting keywords │
                 │         └─*──┘                  │  └─────────────────────────────┘
                 │   ┌──────────────────────────┐  │
                 │   ▼                          │  │
                 └─(─┬─nn─┬─┬──────┬─┬─mm─┬─┬─)─┘  │
                     └─*──┘ └─-─┬─mm─┬─┘└─*──┘ │
                                └─*──┘         │
►──┬──────────────────────────┬──────────────────────────────────────────────────►◄
   │ Display limiting keywords │
   └──────────────────────────┘
```

Display limiting keywords:

```
├──┬──────────┬──┬──────────────┬──┬──────────────┬──┤
   └─,PAGE────┘  └─,PRIORITY────┘  └─,RECORD──────┘
```

Selection limiting keywords:

```
├──┬──────────────────────────────────┬──┬──────────────────────────────────┬──┤
   └─,──┬──────┬─PAGE──┬─=──┬─page─┬──┘  └─,──┬──────┬─RECORD──┬─=──┬─record─┬──┘
        └─/────┘       ├─ê=─┤      │          └─/────┘         ├─ê=─┤        │
                       ├─>──┤      │                           ├─>──┤        │
                       └─<──┘      │                           └─<──┘        │
```

Parameters

PAGE=page
Specifies the output page counts (1-16777215) that are associated with the priorities specified in the PRIORITY=parameter.

PRIORITY
Specifies the output selection priority (0-255) for the output interval specified by the corresponding RECORD= and PAGE= parameters.

RECORD=record
Specifies the output line counts (1-16777215) that are associated with the priorities specified in the PRIORITY parameter.

Authority Required

This command requires **display** authority.

This command requires **read** security access authority. For a description of assigning command input authority, see *z/OS JES2 Initialization and Tuning Guide*.

Scope

Single Member. The response to this command will be a display of information about this member only. You might want to use this command to get information

about all members in the MAS. To do so, you can use the MVS ROUTE *ALL command to issue this command to all active members (if the JES2 command character is the same on all members). See *z/OS MVS System Commands* for more information on using the ROUTE *ALL command.

Messages

The $HASP848 message is issued in response to this command.

Example

1 `$D OUTPRTY`

```
$d outprty
$HASP848 OUTPRTY(1)   PRIORITY=144,RECORD=2000,PAGE=50
$HASP848 OUTPRTY(2)   PRIORITY=128,RECORD=5000,PAGE=100
$HASP848 OUTPRTY(3)   PRIORITY=112,RECORD=15000,PAGE=300
$HASP848 OUTPRTY(4)   PRIORITY=96,RECORD=16777215,PAGE=16777215
$HASP848 OUTPRTY(5)   PRIORITY=80,RECORD=16777215,PAGE=16777215
$HASP848 OUTPRTY(6)   PRIORITY=64,RECORD=16777215,PAGE=16777215
$HASP848 OUTPRTY(7)   PRIORITY=48,RECORD=16777215,PAGE=16777215
$HASP848 OUTPRTY(8)   PRIORITY=32,RECORD=16777215,PAGE=16777215
$HASP848 OUTPRTY(9)   PRIORITY=16,RECORD=16777215,PAGE=16777215
```

JES2 provides information about the start options.

$D PATH - Display Paths from Node to Node

Function

To display the path from one node to another in a network.

One or more parameters on this command accepts wildcards. Parameter descriptions will note that.

Syntax

```
►►──$D──PATH──┬──────────────────────────────────────────────────────────────────────────►◄
              │ ┌──────────┐
              ├─n──┬──────┬──┤
              │    └─-─┬─n─┬┘  │
              │        └─*─┘   │
              ├─'nodename'─────┤
              │   ┌──,──────────┐
              │   ▼             │
              └─(─────n──┬──────┬──┬──────┬──────────)──┘
                         │ ┌──┐ │  │ ┌──┐ │
                         │ └─*┘ │  │ └─n┘ │
                         │      │  │ └─*┘ │
                         ├─nodename────────┤
                         └─'nodename'──────┘
```

Parameters

PATH
Displays the path from the node at which the command is entered to the node specified in the command.

(nodename|n|*)
Specifies the target node. You can use nodename or node number or an asterisk (*) to obtain information for **all** nodes. You can also specify wildcards for the path name. See “Using Wildcards” on page 93 for additional information.

Authority Required

This command requires **display** authority. The description of the $T RDRnn command explains how to ensure the proper MVS system command group authority is assigned.

This command requires **read** security access authority. For a description of assigning command input authority, see *z/OS JES2 Initialization and Tuning Guide*.

Scope

MAS-Wide. This command displays information about the entire MAS.

Messages

The $HASP231 message displays the nodes in the path from the node on which the command is entered to the node named in the command.

The STATUS parameter will be displayed, however, this parameter cannot be specified (it is display-only). A STATUS=SIGNON VIA LINE will be displayed whenever the primary line displayed in the message is currently in the process of a sign-on.

Examples

1

```
$dpath(vmx02)
$hasp231 path(vmx02) 634
$hasp231 path(vmx02)     status=(through member d3x0),rest=100,
$hasp231                 path=(isof1,vmx02)
```

The path from local node isof1 to target node vmx02 is made through MAS member d3x0 and consists of only these two nodes.

2

```
$DPATH001
$HASP231 PATH(BATEST) 856
$HASP231 PATH(BATEST)    STATUS=(THROUGH MEMBER ST37),REST=400,
$HASP231                 PATH=(S2324,AB2JES,BATEST),
$HASP231                 STATUS=(THROUGH LNE1101),REST=400,
$HASP231                 PATH=(S2324,JSYSTEM,BATEST),
$HASP231                 STATUS=(AWAITING RESET WITH AHFJES),
$HASP231                 REST=400,PATH=(S2324,AHFJES,BATEST)
```

The path from local node S2324 to target node BATEST occurs through MAS members ST37/LNE1101, causes the installation a resistance of 400, and consists of three nodes.

$D PCE - Display Tracing Status for JES2 Processors

Function

To display status information (such as tracing status, ended counts or $ACTIVE counts) for one or more JES2 PCE types.

Syntax

```
►►──$D──PCE──┬──────────────────────────────────────────────┬──┬──────────────────────────────────────────────────►
             │─'pce'──────────────────────────────────────────│  │─┤ Selection limiting keywords ├─│
             │                ┌──────────────────────────────┐│  │                                                  │
             │──(──────────────┴─┬─pce──────┬─┬─────────────┬──┴──)──│                                                  │
             │                   │─'pce'────│ │─-pce────────│       │                                                  │
             │                   │─*────────│ │─-'pce'──────│       │                                                  │
             │                                 │─-*──────────│       │                                                  │
►────────────┴─┬─────────────────────────────────────────────────────────────────────────────────────────────────────►◄
               │─┤ Display limiting keywords ├─│
```

Display limiting keywords:

```
├──┬──────────────────────────────────────────────────────────────────────────────────────────────────────────────►
   │─,ACTive─│ │─,Allocated─│ │─,COUNT──────────────────────────────────────────────────────────│ │─,Defined─│ │─,DESC─│
   │                                                  ┌──────────────────────────────┐│
   │                                                  │                              │
   │                                                  ┴─┬─Allocated─┬─┬──────────────┬──┴──)──│
   │                                                    │─Defined───│ │─────────────│       │
   │                                                    │─Ended─────│ │─────────────│       │
►──┴──┬──────────────────────────────────────────────────────────────────────────────────────────────────────────┤
      │─,DETails──────────────────────────────────────────────────────────│ │─,Ended─│ │─,LONG─│ │─,TRace─│
      │                                                  ┌──────────────────────────────┐│
      │                                                  │                              │
      │                                                  ┴─┬─ACTive────┬─┬──────────────┬──┴──)──│
      │                                                    │─┬─CURJOB─┬─│ │─────────────│       │
      │                                                    │─└─JOBid──┘─│ │─────────────│       │
      │                                                    │─ENDed─────│ │─────────────│       │
      │                                                    │─EXIt──────│ │─────────────│       │
      │                                                    │─I/O───────│ │─────────────│       │
      │                                                    │─NAME──────│ │─────────────│       │
      │                                                    │─TRace─────│ │─────────────│       │
      │                                                    └─WAIT──────┘ └─────────────┘       │
```

Selection limiting keywords:

```
├──┬──────────────────────────────────────────────────────────────────────────────────────────────────────────────►
   │─,─┬─────┬─ACTive─┬─=──┬─active─│ │─,─┬─────┬─Allocated─┬─=──┬─allocated─│
   │   └─/───┘        │─¬=─│        │   └─/───┘           │─¬=─│
   │                  │─>──│        │                     │─>──│
   │                  └─<──┘        │                     └─<──┘
```

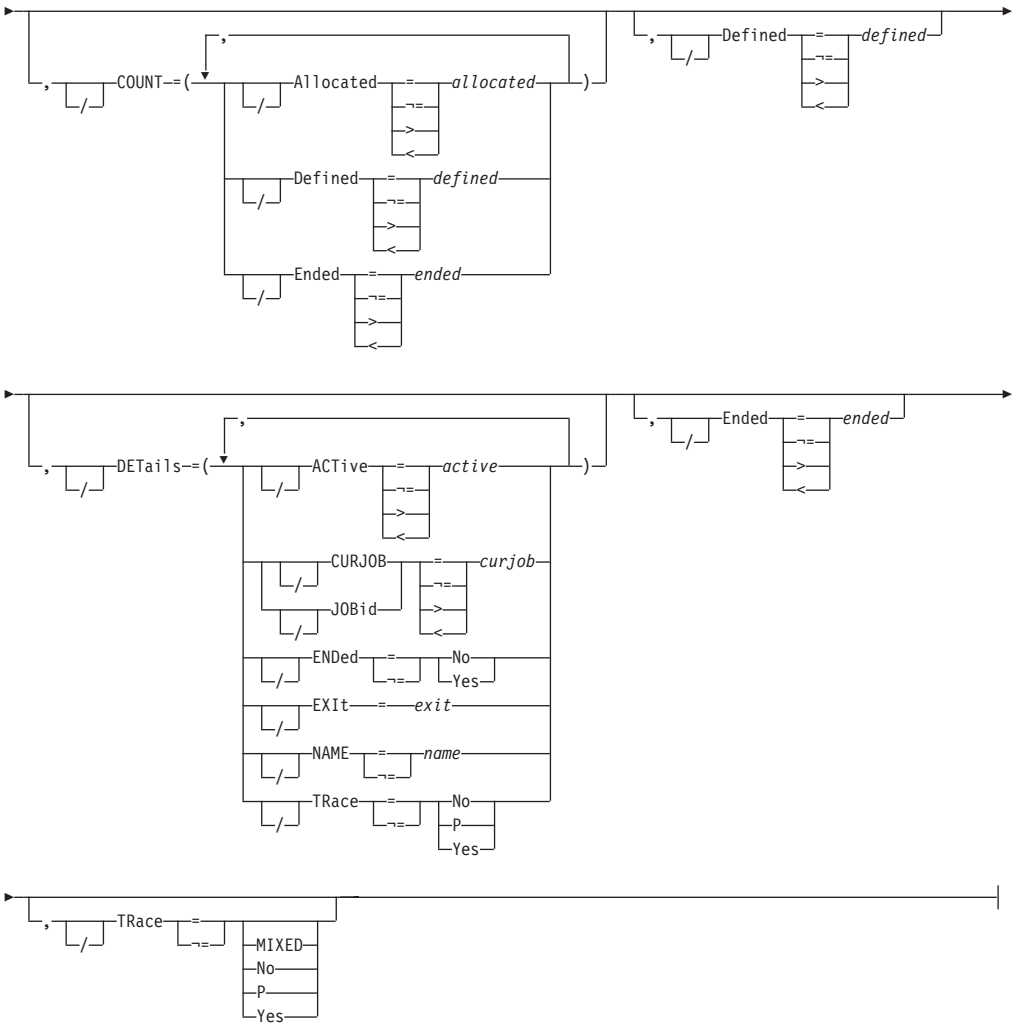

Parameters

pce

JES2 displays the status of processors in the specified processor-type(s). If this operand is omitted, then all PCE types are displayed.

The valid processor-types are:

Command Input	Processors
ALICE	Acquire lock and initiate cleanup executor
ASYNC	ASYNC I/O Processor
BERTLOCK	BERT Lock Post Processor
CKPT	Checkpoint Processor
CNVT	JCL Converter
COMM	Command Processor
ENF	ENF Listen Processor
EVTL	Event Trace Log
EXEC	Execution Services
FCLEANUP	FSS Cleanup at EOM
HOPE	Output Processor
INTRDR	Internal Reader
JCMD	MAS Command Processor
MCON	Remote Console Processor

MLLM	Line Manager
MISC	Miscellaneous processor
NET.JR	NJE Job Receiver
NET.JT	NJE Job Transmitter
NET.SR	NJE SYSOUT Receiver
NET.ST	NJE SYSOUT Transmitter
NET.RR	Job Route Receiver
NET.RT	Job Route Transmitter
NPM	Network Path Manager
OFF.JR	Offload Job Receiver
OFF.JT	Offload Job Transmitter
OFF.SR	Offload SYSOUT Receiver
OFF.ST	Offload SYSOUT Transmitter
PRT	Printer
PRTYO	Output Priority Aging
PRTY	Job Priority Aging
PSO	Process SYSOUT Processor
PUN	Punch
PURGE	Purge Processor
RDR	Reader
RESOURCE	Resource Monitor
RESTART	ARM Support Processor
RMT.RDR	RJE Reader
RMT.PRT	RJE Printer
RMT.PUN	RJE Punch
SJFSERV	SWB Modify Processor
SNF	Spool Garbage Collector
SOM	Spool Offload I/O Mgr
SPI	SYSOUT API Processor
SPIN	Spin Output Processor
SPOOL	Spool Command Processor
STAC	SSI Status/Cancel Services
TIME	Elapsed Time Monitor
TIMER	STIMER/TTIMER Processor
WARM	Warm Start Processor
XCF	JESXCF Interface
XCFCMND	JESXCF Request Processor

See ″PCE List″ in *z/OS JES2 Messages* for a list of PCEs and a description of their functions.

ACTive=active
$ACTIVE count of all PCEs of this type. The $ACTIVE count is the number of devices of this type that are currently active or the number of jobs active on PCEs of this type.

Allocated=allocated
Number of defined PCEs that have been created.

COUNT=Allocated|Defined|Ended

Allocated
Number of defined PCEs that have been created.

Defined
Number of PCEs of this type defined to JES2.

Ended
Number of allocated PCEs that have ended.

Defined=defined
Number of PCEs of this type defined to JES2.

DESC
Diplays a short description of the PCE type.

DETails=PCE(*pcetype*) | NAME=*name* | WAIT=*waitparms* | MOD=*csect* | SEQ=*seq* | TIME=*yyyy.ddd,hh:mm:ss* | {CURJOB=*jobnnnnn*} | {ACTIVE=*active*} | {I/O=*iii*} | {ENDED=*yes*} | {EXIT=*eee*}
Displays detailed information about every PCE of the type.

pcetype
The processor type for a group of JES2 processors. This value is the NAME operand for an entry in the JES2 installation PCE table. For a complete list of the JES2 processor types, see the $T PCE command, or Appendix A PCE list for a list of PCEs, their names, and whether or not they are required, and a description of their function.

mod
Module CSECT name where PCE is $WAITing.

SEQ
Sequence number in *mod* where PCE is $WAITing.

TIME
Date and time when PCE $WAITed.

CURJOB
Current job id of job being processed (if any) by the PCE.

ACTIVE
$ACTIVE count for the PCE.

I/O
Number of $EXCPs outstanding for the PCE.

ENDED=*yes*
Present only if the PCE has **ended**.

EXIT=*eee*
Present only if the PCE is in logic that is part of an installation exit.

Ended=ended
Number of allocated PCEs that have ABENDed and are now ended.

LONG
Includes a description of the PCEs in the display.

TRace={Mixed|No|P|Yes}
Displays the current trace status.

Authority Required

This command requires **display** authority. The description of the $T RDRnn command explains how to ensure the proper MVS system command group authority is assigned.

This command requires **read** security access authority. For a description of assigning command input authority, see *z/OS JES2 Initialization and Tuning Guide*.

Processing Considerations

If the processors within the specified type do not all have the same TRACE status, JES2 displays the status as 'MIXED'. You must then use individual $DU commands to determine the status of each processor.

Scope

Single Member. The response to this command will be a display of information about this member only. You might want to use this command to get information about all members in the MAS. To do so, you can use the MVS ROUTE *ALL command to issue this command to all active members (if the JES2 command character is the same on all members). See *z/OS MVS System Commands* for more information on using the ROUTE *ALL command.

Messages

The $HASP653 message displays the current tracing status and PCE counts for the processor types specified.

Examples

1 `$d pce(prt)`

```
$HASP653 PCE(PRT)       COUNT=(20,20,0),ACTIVE=0,TRACE=YES
```

20 local printers are defined to JES2 and all 20 are currently allocated (PCEs exist in storage for these printers). All allocated PCEs have processor tracing set (TR=P).

2 `$d pce(rdr,rmt.rdr)`

```
$HASP653 PCE(RDR)       COUNT=(15,10,0),ACTIVE=0,TRACE=MIXED
$HASP653 PCE(RMT.RDR)   COUNT=(20,0,0),ACTIVE=0,TRACE=
```

15 local readers are defined to JES2, 10 of which are currently allocated (PCEs exist in storage for these readers). The tracing status of the allocated local readers is mixed (some readers are currently being traced, others are not).

20 remote readers are defined to JES2. Because none of these readers is currently allocated, JES2 does not display the tracing status.

Note: Local devices (PRT, PUN, RDR) always have a PCE. Remote devices are dynamic (Rn.PR, Rn.PU, Rn.RD).

3 `$d pce(stac)`

```
$HASP653 PCE(STAC)      COUNT=(2,2,0),ACTIVE=0,TRACE=NO
```

Two Status/Cancel Services processors are defined and both are currently allocated (PCEs exist in storage for these 2 processors). No allocated PCEs have processor tracing set (TR=N).

4 `$d pce,(npm),long`

```
$HASP653 PCE(NRM)  DESC=NETWORK PATH MANAGER,COUNT=(1,1,0),
$HASP653    ACTIVE=0,TRACE=NO
```

LONG adds DESC.

5 `$d pce,(npm),details`

```
$HASP653 PCE(NRM)  NAME=NPM,WAIT=WORK,XECB,INHIBIT=NO,
$HASP653    MOD=HASPNPM,SEQ=074910000,TIME=1998.175,
$HASP653    09:37:16,JOBID=JOB00012,ACTIVE=1,I/O=2
```

JOBID, ACTIVE, I/O and ENDED are optional. JOBID only displays if there is one. ACTIVE and I/O will display if non-zero.

6 `$dpce(prt),d,a,e`

```
$HASP653 PCE(PRT)       DEFINED=11,ALLOCATED=11,ENDED=0
```

Display DEFINED, ALLOCATED and ENDED.

$D PCEDEF - Display PCE Definitions

Function

Display JES2 PCE definitions.

Syntax

```
►►──$D──PCEDEF──┬──────────┬──┬──────────┬──┬──────────┬──┬──────────┬──┬──────────┬──┬──────────┬──►◄
                └,CNVTNUM──┘  └,OUTNUM───┘  └,PSONUM───┘  └,PURGENUM─┘  └,SPINNUM─┘  └,STACNUM──┘
```

Parameters

CNVTNUM
Specifies the number (1-10) of converted processors defined to JES2.

OUTNUM
Specifies the number (1-10) of output processors defined to JES2.

PSONUM
Specifies the number (1-10) of PSO processors defined to JES2.

PURGENUM
Specifies the number (1-10) of purge processors defined to JES2.

SPINNUM
Specifies the number (3-10) of pin processors defined to JES2.

STACNUM
Specifies the number (1-10) of TSO/E STATUS/CANCEL processors defined to JES2.

Authority Required

This command requires **display** authority.

This command requires **read** security access authority. For a description of assigning command input authority, see *z/OS JES2 Initialization and Tuning Guide*.

Scope

Single Member. The response to this command will be a display of information about this member only. You might want to use this command to get information about all members in the MAS. To do so, you can use the MVS ROUTE *ALL command to issue this command to all active members (if the JES2 command character is the same on all members). See *z/OS MVS System Commands* for more information on using the ROUTE *ALL command.

Messages

The $HASP849 message is issued in response to this command.

Example

```
1  $D PCEDEF
           $d pcedef
           $HASP849 PCEDEF
$HASP849 PCEDEF  CNVTNUM=2,PURGENUM=2,PSONUM=2,OUTNUM=2,
$HASP849         STACNUM=2,SPINNUM=3
```

JES2 provides information about the start options.

$D PRINTDEF - Display Print Environment Characteristics

Function

To display the characteristics assigned to jobs entering the system.

Syntax

```
►►──$D──PRINTDEF──┬──────────┬──┬──────────┬──┬──────┬──┬──────────┬──┬──────────┬──┬──────────┬──►
                  └,CCWNUM───┘  └,DBLBUFR──┘  └,FCB──┘  └,LINECT──┘  └,NEWPAGE──┘  └,NIFCB──┘

►──┬──────────┬──┬──────────┬──┬──────────┬──┬──────────┬──┬──────────────────────┬──┬──────────┬──┬──────┬──►◄
   └,NIFLASH──┘  └,NIUCS────┘  └,RDBLBUFR──┘  └,SEPPAGE──┬──────────────────────┬──┘  └,TRANS────┘  └,UCS──┘
                                                         │      ┌──────────────┐      │
                                                         │      ▼              │      │
                                                         └──=(──┬──LOCAL──────┬──)──┘
                                                                └──REMOTE─────┘
```

Parameters

PRINTDEF
The $HASP833 message displays the current JES2 print environment characteristics.

CCWNUM
Specifies the maximum number (1-233) of channel command words (CCWs) to be used per channel program area for local impact printers.

DBLBUFR
Specifies whether or not double buffering is to be used for local printers.

FCB
Specifies the name of the forms control buffer (FCB) image or the carriage control tape that JES2 initially assumes is mounted on every impact printer.

LINECT
Specifies the maximum number (1-254) of lines to be printed per page on job output.

NEWPAGE
Specifies how to “skip to channel” is counted as a new page.

NIFCB
Specifies the name of both the forms control buffer image that JES initially loads into every non-impact printer and the installation’s default FCB for data sets that do not explicitly request an FCB when printed on a non-impact printer.

NIFLASH
Specifies the 1 to 4 character name of the initial and default forms flash ID.

NIUCS
Specifies the name of both the character arrangement table that JES2 initially loads into every 3800 printer and the installation’s default character arrangement table that is loaded into the printer for data sets that do not specify a character arrangement table.

RDBLBUFR
Specifies whether double (Yes) or single (No) buffering is to be used for remote printers.

SEPPAGE[=LOCAL|REMOTE]
Specifies the type of separator page JES2 produces on local and remote printers.

TRANS
Specifies whether (Yes) or not (No) character translation is to be used for local and remote printers.

UCS
Specifies the name of the print chain, print train, or print band default character set that is mounted on every impact printer for which a specific universal character set (UCS) image is not specified.

Authority Required

This command requires **display** authority. The description of the $T RDRnn command explains how to ensure the proper MVS system command group authority is assigned.

This command requires **read** security access authority. For a description of assigning command input authority, see *z/OS JES2 Initialization and Tuning Guide*.

Scope

The scope of some commands varies by parameter.

Some parameters on certain commands will display information about the entire MAS, while other parameters will display information about this member only.

For those commands that are single member scope, or have some parameters that are single member scope, you might want to use the parameters for that command to get information about all members of the MAS. If so, you can use the MVS ROUTE *ALL command to issue that command to all active members (if the JES2 command character is the same on all members). See *z/OS MVS System Commands* for more information on using the ROUTE *ALL command.

Messages

The $HASP833 message is issued in response to this command. list the resulting messages.

Example

1 `$d printdef`

```
$HASP833 PRINTDEF  CCWNUM=49,LINECT=60,NEWPAGE=ALL,NIFCB=STD3,
$HASP833           NIFLASH=****,NIUCS=GT10,FCB=6,TRANS=NO,UCS=0,
$HASP833           DBLBUFR=YES,RDBLBUFR=NO,SEPPAGE=(LOCAL=HALF,
$HASP833           REMOTE=HALF)
```

The $HASP833 message indicates print characteristics.

$D PROCLIB(xxxxxxxx) - Display a Dynamic PROCLIB Concatenation

Function

The $D PROCLIB(xxxxxxxx) command displays dynamic PROCLIB concatenations. $D PROCLIB(xxxxxxxx) only displays dynamic PROCLIBs and cannot be used to view PROCLIBs defined in the JES2 start PROC.

Syntax

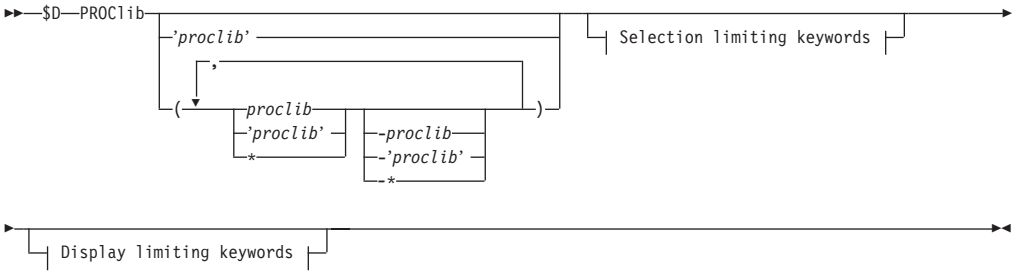

Display limiting keywords:

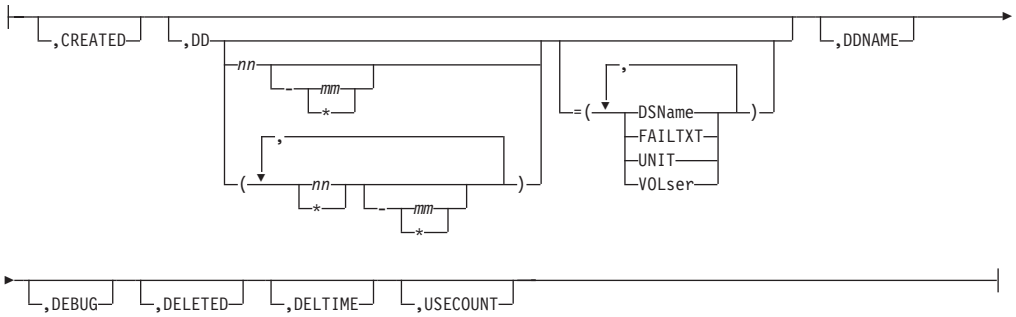

Selection limiting keywords:

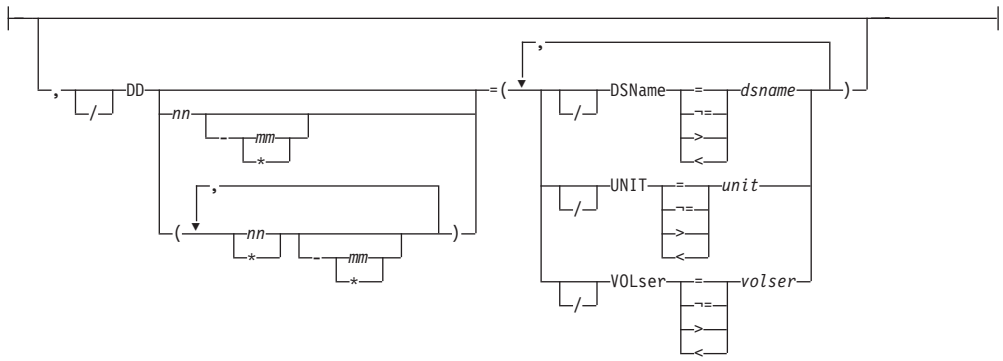

Parameters

(xxxxxxxx)

Specifies the 1-8 character PROCLIB DD name being displayed. You can also specify wildcards on this parameter. See “Using Wildcards” on page 93 for additional information.

CREATED
Displays the time the PROCLIB concatenation was created.

DD(nnn)=
Can be used to select which PROCLIB concatenation to display.

DSName=jxxx,,,x
Specifies a 1-44 character data set name which is in a PROCLIB concatenation. You can also specify wildcards on this parameter. See “Using Wildcards” on page 93 for additional information.

UNIT=hhhh|/hhhh|nnnn|cccccccc
Specifies unit information for the PROCLIB concatenations to be displayed. The data set must be specified in one of the following ways:

hhhh | /hhhh
specifies a 3 or 4 digit hexadecimal device number. Device numbers can be specified by any of the following formats:

- UNIT=hhh
- UNIT=/hhh
- UNIT=/hhhh

where hhh and hhhh represent the device numbers. A slash (/) must precede a 4 digit device number.

nnnn
Specifies a device name.

cccccccc
Specifies a 1 to 8 character group name assigned to the device or group of devices.

VOLser=xxxxxx
Specifies a 1 to 6 character volume serial number for the PROCLIBs to be displayed.

DDNAME
Displays the real DD name that is associated with this PROCLIB concatenation.

DEBUG
Displays additional information about PROCLIB concatenations including concatenation that have been logically deleted.

USECOUNT
Displays the current use count for a PROCLIB concatenation. A PROCLIB is considered in use if a conversion processor currently has the data set open.

Authority Required

This command requires **display** authority. The description of the $T RDRnn command explains how to ensure the proper MVS system command group authority is assigned.

This command requires **read** security access authority. For a description of assigning command input authority, see *z/OS JES2 Initialization and Tuning Guide*.

Processing Considerations

A $D PROCLIB command cannot display PROCLIB concatenations specified in the JES2 start PROC.

Scope

Single Member. The response to this command will be a display of information about this member only.

You may want to use this command to get information about all members in the MAS. To do so, you can use the MVS ROUTE *ALL command to issue this command to all active members (if the JES2 command character is the same on all members). See *z/OS MVS System Commands* for more information on using the ROUTE *ALL command.

Messages

The HASP319 message displays the current PROCLIB concatenation.

The HASP003 RC=52 indicates that no PROCLIBs exist matching the filters specified.

Example

1

```
$dproclib
$HASP319 PROCLIB(PROC01)    DD(1)=(DSNAME=SYS1.PROCLIB),
$HASP319                    DD(2)=(DSNAME=TEST.PROCLIB)
```

Display all dynamic PROCLIBs

2

```
$dproclib,debug
$HASP319 PROCLIB(PROC00)    DELETED PROCLIB,USECOUNT=1,
$HASP319                    DDNAME=SYS00025,
$HASP319                    CREATED=2001.157,16:32:58.78,
$HASP319                    DD(1)=(DSNAME=SYS1.PROCLIB)
$HASP319 PROCLIB(PROC01)    USECOUNT=0,DDNAME=SYS00026,
$HASP319                    CREATED=2001.157,16:34:03.67,
$HASP319                    DD(1)=(DSNAME=SYS1.PROCLIB),
$HASP319                    DD(2)=(DSNAME=TEST.PROCLIB)
```

Display debugging information for dynamic PROCLIB concatenations

$D PRTnnnn and $D R(nnnn).PR(m) - Display Printers

Function

To display printer work selection and processing characteristics.

This command has parameters you can use as a filtering technique to limit the type of information to search, or the amount of information to display. See “Using filtering to control and display information” on page 99 for additional information.

Syntax

```
►►─$D──┬─PRINTER─┬──┬──────────────────────────────────────────────────────────────────────────────────────────────────────────────────►
       └─PRT─────┘  │ ┌──────────────────────────────────────────────────────────────────────────────────────────────────────────┐  │
                    │ │ ┌──────────────────────────────────────────────────────────────────────────────────────────────────────┐ │  │
                    │ │ │ ┌──────────────────────────────────────────────────────────────────────────────────────────────────┐ │ │  │
                    │ │ │ │ ┌──────────────────────────────────────────────────────────────────────────────────────────────┐ │ │ │  │
                    │ │ │ │ │ ┌──────────────────────────────────────────────────────────────────────────────────────────┐ │ │ │ │  │
                    │ │ │ │ │ │ ┌──────────────────────────────────────────────────────────────────────────────────────┐ │ │ │ │ │  │
                    │ │ │ │ │ │ │ ┌──────────────────────────────────────────────────────────────────────────────────┐ │ │ │ │ │ │  │
                    │ │ │ │ │ │ │ │ ┌──────────────────────────────────────────────────────────────────────────────┐ │ │ │ │ │ │ │  │
                    │ │ │ │ │ │ │ │ │ ┌──────────────────────────────────────────────────────────────────────────┐ │ │ │ │ │ │ │ │  │
                    │ │ │ │ │ │ │ │ │ │ ┌──────────────────────────────────────────────────────────────────────┐ │ │ │ │ │ │ │ │ │  │
                    │ │ │ │ │ │ │ │ │ │ │ ┌──────────────────────────────────────────────────────────────────┐ │ │ │ │ │ │ │ │ │ │  │
                    │ │ │ │ │ │ │ │ │ │ │ │ ┌──────────────────────────────────────────────────────────────┐ │ │ │ │ │ │ │ │ │ │ │  │
                    │ │ │ │ │ │ │ │ │ │ │ │ │ ┌──────────────────────────────────────────────────────────┐ │ │ │ │ │ │ │ │ │ │ │ │  │
                    │ │ │ │ │ │ │ │ │ │ │ │ │ │ ┌──────────────────────────────────────────────────────┐ │ │ │ │ │ │ │ │ │ │ │ │ │  │
                    │ │ │ │ │ │ │ │ │ │ │ │ │ │ │ ┌──────────────────────────────────────────────────┐ │ │ │ │ │ │ │ │ │ │ │ │ │ │  │
                    │ │ │ │ │ │ │ │ │ │ │ │ │ │ │ │ ┌──────────────────────────────────────────────┐ │ │ │ │ │ │ │ │ │ │ │ │ │ │ │  │
                    │ │ │ │ │ │ │ │ │ │ │ │ │ │ │ │ │ ┌──────────────────────────────────────────┐ │ │ │ │ │ │ │ │ │ │ │ │ │ │ │ │  │
                    │ │ │ │ │ │ │ │ │ │ │ │ │ │ │ │ │ │ ┌──────────────────────────────────────┐ │ │ │ │ │ │ │ │ │ │ │ │ │ │ │ │ │  │
                    │ │ │ │ │ │ │ │ │ │ │ │ │ │ │ │ │ │ │ ┌──────────────────────────────────┐ │ │ │ │ │ │ │ │ │ │ │ │ │ │ │ │ │ │  │
                    │ │ │ │ │ │ │ │ │ │ │ │ │ │ │ │ │ │ │ │ ┌──────────────────────────────┐ │ │ │ │ │ │ │ │ │ │ │ │ │ │ │ │ │ │ │  │
                    │ │ │ │ │ │ │ │ │ │ │ │ │ │ │ │ │ │ │ │ │ ┌──────────────────────────┐ │ │ │ │ │ │ │ │ │ │ │ │ │ │ │ │ │ │ │ │  │
                    │ │ │ │ │ │ │ │ │ │ │ │ │ │ │ │ │ │ │ │ │ │ ┌──────────────────────┐ │ │ │ │ │ │ │ │ │ │ │ │ │ │ │ │ │ │ │ │ │  │
                    │ │ │ │ │ │ │ │ │ │ │ │ │ │ │ │ │ │ │ │ │ │ │ ┌──────────────────┐ │ │ │ │ │ │ │ │ │ │ │ │ │ │ │ │ │ │ │ │ │ │  │
                    │ │ │ │ │ │ │ │ │ │ │ │ │ │ │ │ │ │ │ │ │ │ │ │ ┌──────────────┐ │ │ │ │ │ │ │ │ │ │ │ │ │ │ │ │ │ │ │ │ │ │ │  │
                    │ │ │ │ │ │ │ │ │ │ │ │ │ │ │ │ │ │ │ │ │ │ │ │ │ ┌──────────┐ │ │ │ │ │ │ │ │ │ │ │ │ │ │ │ │ │ │ │ │ │ │ │ │  │
                    │ │ │ │ │ │ │ │ │ │ │ │ │ │ │ │ │ │ │ │ │ │ │ │ │ │ ┌──────┐ │ │ │ │ │ │ │ │ │ │ │ │ │ │ │ │ │ │ │ │ │ │ │ │ │  │
                    │ │ │ │ │ │ │ │ │ │ │ │ │ │ │ │ │ │ │ │ │ │ │ │ │ │ │ │ │ │ │
```

```
►──┬──────┬──┬──────────┬──┬──────────┬──┬──────────┬──┬──────┬──┬──────┬──┬──────────┬──►
   └,PLIM─┘  └,PRESELCT─┘  └,PRMode───┘  └,─┬Queue─┬─┘  └,PROC─┘  └,RANGE─┘  └,Routecde─┘
                                           └Class─┘

►──┬──────┬──┬──────────┬──┬──────────┬──────────────────────────────────────────────────►
   └,Sep──┘  └,SEPCHARS─┘  └,SEPDS────┘

►──┬──────┬──┬──────┬──┬──────────┬──┬──────────┬──┬──────────┬──┬──────┬──┬──────┬──►
   └,SETUP─┘  └,─┬K─────┬─┘  └,SUSPEND─┘  └,TRace─┘  └,TRANS──┘  └,TRKCELL─┘  └,─┬T───┬─┘
                 └SPACE─┘                                                        └UCS─┘

►──┬──────────┬──┬──────┬──┬──────────┬──┬──────────┬──┬──────────┬──────────────────────┤
   └,UCSVerfy─┘  └,UNIT─┘  └,Volume───┘  └,Writer───┘  └,WS───────┘
```

Selection limiting keywords:

```
├──┬──────────────────────────────┬──┬──────────────────────────────────────────────────►
   └,──┬──────┬──Burst──┬──────┬──┘  └,──┬──────┬──CKPTMODE──┬──────┬──┬──────┬──┬──────┬─┘
       └/─────┘         └=─────┘       └/─────┘            └=─────┘  └PAGE─┘  └SEC──┘
                                  ┌No──┐
                                  └Yes─┘

►──┬──────────────────────────────┬──┬──────────────────────────────────────────────────►
   └,──┬──────┬──COPYMARK──┬──────┬──┘  └,──┬──────┬──CReator──┬──────┬──────────┬──────┘
       └/─────┘            └=─────┘       └/─────┘           └=─────┘          └creator─┘
                                  ┌CONSTANT──┐                  ┌^=──┐
                                  ├DATASET───┤                  ├>───┤
                                  ├DEFAULT───┤                  └<───┘
                                  └JOB───────┘

►──┬──────────────────────────────┬──┬──────────────────────────────────────────────────►
   └,──┬──────┬──DEVFCB────┬──────┬──┘  └,┬ / ┬──DEVFLASH────┬──────┬──────────┬──────┘
       └/─────┘            └=─────┘       │   │               └=─────┘          └devflash─┘
                                  ┌^=──┐  │   │                  ┌^=──┐
                                  ├>───┤  │   │                  ├>───┤
                                  └<───┘  │   │                  └<───┘

►──┬──────────────────────────────┬──┬──────────────────────────────────────────────────►
   └,──┬──────┬──┬──────┬──┬──────┬──┬──────┬──┬──────┬──┬──────┬──┬──────┬──┬──────┬──┬──┘
       │      │  │      │  │      │  │      │  │      │  │      │  │      │  │      │  │
```

```
►─┬─────────────────────────────────────────────────────────────────────────────────────────────────────────────────────────────────►
  │ ┌─,─┬─/─┬─FSS─┬─=──┬─fss─┐ │
  │ │   │   │     │ ^= │     │ │
  │ │   │   │     │ >  │     │ │
  │ │   │   │     │ <  │     │ │
  │ │   │   │     │    │     │ │
  │ │   │   │     │    │     │ │
  │ │   │   │     │    
```

```
►──┬──────────────
```

CKPTSEC
Displays the number of seconds (0-32767) to elapse before each output checkpoint is taken. This parameter is valid only for a printer under the control of a functional subsystem.

CLass|Queue
Displays, in priority sequence, the output class(es) (A-Z, 0-9) this printer is to process.

COPYMARK
Displays whether indicators of SYSOUT separation markings are incremented on a data set level (DATASET), on a job output element level (JOB), or not at all (CONSTANT).

CReator
Displays the 1 through 8 character userid that creates the SYSOUT data sets to be processed.

DEVFCB
Displays the forms control buffer (FCB) this printer uses if the printer selects output that does not have an FCB associated with it.

DEVFLASH
Displays the 1 to 4 character device default forms FLASH ID.

FCB|C
Displays the forms control buffer (FCB) image or the carriage control tape initially mounted on this remote printer.

FLASH|O
Displays the 1 to 4 character identifier of the forms overlay frame for the specified 3800 printer.

Forms
Displays the 1 through 8 character name of the forms loaded into this printer.

FSS
Displays a 1 to 8 character functional subsystem name that supports a page-mode printer.

FSSINFO
Displays information about the FSS associatedwith this MODE=FSS printer. This data is only displayed when LONG is specified on the display command.

ASID
Displays the address space identifier (ASID) for this printer.

FSSMADDR
Displays the virtual address of the HASPFSSM module used by this printer (in the address space indicated by ASID=).

FSSMAPAR
Displays the APAR number of the latest maintenance applied to the HASPFSSM module used by this printer.

FSSMLENG
Displays the length of the HASPFSSM module used by this printer.

FSSMPTF
Displays the last maintenance applied to the HASPFSSM module used by this printer.

HASPFSSM
Displays the name of the load module that is loaded into the functional subsystem address space (ASID).

NAME
Displays the name of the FSS used by this printer.

PROC
Displays the name of the procedure that contains the JCL to start the FSS.

JOBname
Displays the 1 through 8 character name of jobs whose output is selected by this remote printer. A null parameter of (JOBNAME=) specifies that jobname is not a criterion for output selection.

LIMit
Displays the lower and upper limits (in records) for the size of output that is selected by this printer.

For further information about this parameter, refer to the $T PRTnnnn command.

LONG
Displays additional information.

Mark
Displays whether (Yes) or not (No) the edge of the separator page is marked.

MODE
Displays whether the printer is under the control of a functional subsystem or JES2.

MODIFY|Y
Displays the 1 to 4 character identifier of the copy modification module for the specified 3800 printer.

NEWPAGE
Displays whether JES2 will treat a ‘skip to channel’ or ‘skip to any channel’ as a new page.

NPRO
Displays the non-process runout time in seconds (0-3600).

Pause
Displays whether (Yes) or not (No) the local printer pauses between data sets.

PLIM
Displays the lower and upper page limits for the size of output selected by this printer.

PRESELCT
Displays whether (Y) or not (N) JES2 preselects data sets for this printer. If PRESELCT=N, data sets are selectable by any device.

PRMode
Displays the SYSOUT mode(s) (1 to 8 alphameric characters) processed by this remote printer.

For more information about this parameter, refer to the $T PRT(nnnn) command. For a list of valid process-mode values, see your system programmer.

RANGE
Displays the range of batch jobs (J), started tasks (S), or time sharing users (T) whose output is selected by this remote printer.

Routecde
Displays as many as four internal route codes assigned to this remote printer. A route code indicates that this printer is eligible for print routing. The value for all routing numbers can range from 1 to 32767. For specification requirements, refer to “Route Codes” on page 92.

Sep
Displays whether (YES) or not (NO) separator cards are provided initially between data set groups.

SEPCHARS
Displays the character arrangement table to use for separator pages printed on the 3800 printer.

SEPDS
Displays whether (Y) or not (N) a header separator page is to be produced for each copy of each data set within an output group. JES2 invokes EXIT 15 (Output Data Set/Copy Separators), if enabled, to generate separator pages.

SETUP
Displays whether (HALT) or not (NOHALT) JES2 is to halt the printer and issue the $HASP190 message requesting the operator to verify the output control specifications when the output requirements for a particular job differ from the output characteristics specified for the printer. (If halted, the punch must be restarted using the $S command.)

SPACE|K
Displays the spacing for printed output: 1=single; 2=double; 3=triple.

SUSPEND
Displays whether a remote printer can (No) or cannot (Yes) use the printer-interrupt feature which allows the remote operator to interrupt printing for the transmitting of jobs or JES2 commands to this JES2 system. This parameter applies only to printers that are connected to BSC hardware terminals.

STATUS
Displays the current status of the printer, the job active on the printer, and the number of pages or lines printed. Valid printer status values are:

- ACTIVE - JES2 is using the device for job processing and will continue to do so as long as there are jobs available and eligible for that device.
- BUSY - A device in FSS mode is unable to respond with the current status because a previous command is being processed for this device.
- DRAINED - JES2 is not using the device and will not do so until the device is started using a $S command.
- DRAINING - JES2 is currently using the device for the processing of jobs, but will discontinue its use upon completion of the current function.
- ENDED - A non-recoverable ABEND occurred during processing for this device. JES2 has suspended all processing for this device. At the time the device was suspended, work might still have been assigned to the device. All processing on that work has also been suspended. You need to perform a JES2 hot start to recover the device and any work assigned to it.

- HALTED - JES2 has either requested operator assistance or the operator has halted the device ($Z) and is waiting for the device to be started using a $S command.
- INACTIVE - JES2 is not using the device but would do so if jobs were available and eligible for that device.
- INTERVENTION - An FSS-controlled printer requires operator intervention.
- NOT RESPONDING - The FSA informed JES2 that the device is no longer responding to the FSA.
- NOT RESPONDING,INTERVENTION - The FSA informed JES2 that the device is no longer responding to the FSA. Device intervention is required. To determine why the device is not responding, check the device and/or the communication components (for example, VTAM).
- PAUSED - JES2 has paused between jobs during printing or punching. The specified device will not be used until it is started ($S command) or it has been reset from a not-ready to a ready state.
- STARTING - The device is in the process of being started. This status is only possible for FSS-owned devices and initiators.

TRANS
Displays whether data translation is affected.

TRKCELL
Displays whether (YES) or not (NO) data sets that belong to a SYSOUT class with the track-cell characteristic are read from the spool in one operation. The TRKCELL= parameter on the SPOOLDEF initialization statement specifies the number of records in the track cell.

TRace
Displays whether (Yes) or not (No) tracing is activated for this print processor.

UCS|T
Displays the 1 to 4 character identifier of the print train, print chain, or print band that is mounted on this impact printer. This identifier resides in SYS1.IMAGELIB.

UCSVerfy
Displays whether (YES) or not (NO) UCS verification processing is performed when a UCS image is loaded for 4245 and 4248 printers. UCS images are loaded on these printers only when required for print processing; they are **not** loaded in response to a $T PRT command that specifies a change in UCS setup.

UNIT
Displays a 4 digit device number.

Volume
Displays the 5 to 6 character volume serial number of a volume containing a spool data set.

Writer
Displays the 1 through 8 character writer name assigned to this remote printer.

WS
Displays the work selection criteria for this remote printer.

L=a|cc|cca|name|name-a
The area (a), console identifier (cc), area and console identifier (cca), symbolic console name (name), or symbolic console name and output area (name-a) of the active MCS console at which the requested display appears.

Authority Required

This command requires **display** authority. The description of the $T RDRnn command explains how to ensure the proper MVS system command group authority is assigned. The $T INTRDR command sets the command authority for internal readers.

This command requires **read** security access authority. For a description of assigning command input authority, see *z/OS JES2 Initialization and Tuning Guide*.

Scope

Single Member. The response to this command will be a display of information about this member only. You might want to use this command to get information about all members in the MAS. To do so, you can use the MVS ROUTE *ALL command to issue this command to all active members (if the JES2 command character is the same on all members). See *z/OS MVS System Commands* for more information on using the ROUTE *ALL command.

Messages

The $HASP603 message displays the status of the printers.

Examples

1 `$dprt1`

```
$HASP603 PRT1      UNIT=0017,STATUS=HALTED,(STC00008 DIP),
$HASP603           BURST=NO,CHAR(1)=GT10,CKPTLINE=0,
$HASP603           CKPTMODE=PAGE,CKPTPAGE=100,CKPTSEC=0,
$HASP603           CREATOR=,DEVFCB=,DEVFLASH=****,FCB=STD3,
$HASP603           FORMS=(STD,,,,,,,),FSS=BLUEBERY,HONORTRC=YES,
$HASP603           JOBNAME=,LASTFORM=STD,LIMIT=(0,*),
$HASP603           COPYMARK=DATASET,MARK=NO,MODE=JES,
$HASP603           NEWPAGE=DEFAULT,NPRO=300,PAUSE=NO,PLIM=(0,*),
$HASP603           PRESELCT=YES,PRMODE=(LINE),QUEUE=A,RANGE=(J1,
$HASP603           999999),ROUTECDE=(LOCAL),SEP=YES,
$HASP603           SEPCHARS=DEFAULT,SEPDS=NO,SETUP=HALT,SPACE=,
$HASP603           TRACE=NO,TRANS=DEFAULT,TRKCELL=NO,UCS=GT10,
$HASP603           UCSVERFY=NO,VOLUME=(,,,),WRITER=,
$HASP603           WS=(W,Q,R,PRM,LIM/F,UCS,FCB),FSATRACE=NO
```

JES2 displays detailed information about local printer 1 that has been defined.

2 `$dprt6,class`

```
$HASP603 PRT16     QUEUE=X
```

JES2 displays the output class to be processed by local printer 6.

3 `$dr1.pr1,eject,suspend`

```
$HASP603 R1.PR1    EJECT=YES,SUSPEND=YES
```

JES2 displays that printer 1 on remote 1 can use the printer-interrupt feature and does eject a page when not starting at the top of a page.

4 `$dr(*).pr(*),eject,suspend`

```
$HASP603 R1.PR1    EJECT=YES,SUSPEND=YES
$HASP603 R2.PR1    EJECT=YES,SUSPEND=YES
$HASP603 R3.PR1    EJECT=YES,SUSPEND=YES
$HASP603 R4.PR1    EJECT=YES,SUSPEND=YES
$HASP603 R5.PR1    EJECT=YES,SUSPEND=YES
$HASP603 R5.PR2    EJECT=YES,SUSPEND=YES
$HASP603 R24.PR1   EJECT=YES,SUSPEND=YES
$HASP603 R24.PR2   EJECT=YES,SUSPEND=YES
```

JES2 displays only the status of eject and suspend parameters for all remote printers in the MAS complex.

5 `$dr1.pr1,suspend`

```
$HASP603 R1.PR1    SUSPEND=YES
```

JES2 displays only the status of the SUSPEND parameter for remote printer 1.

$D PUNCHDEF - Display Punch Environment Characteristics

Function

To display the characteristics assigned to jobs entering the system.

Syntax

```
►►──$D──PUNCHDEF──┬──────────┬──┬──────────┬──┬──────────┬──────────────────────────────►◄
                  └,CCWNUM───┘  └,DBLBUFR──┘  └,RDBLBUFR─┘
```

Parameters

PUNCHDEF
The $HASP847 message displays the current JES2 punch environment characteristics.

CCWNUM
Specifies the maximum number (1-235) of double words to be used for the channel program area for local punches.

DBLBUFR
Specifies whether (Yes) or not (No) double buffering is used for local card punches.

RDBLBUFR
Specifies whether double buffering (Yes) or single buffering (No) is to be used for remote card punches.

Authority Required

This command requires **display** authority. The description of the $T RDRnn command explains how to ensure the proper MVS system command group authority is assigned.

This command requires **read** security access authority. For a description of assigning command input authority, see *z/OS JES2 Initialization and Tuning Guide*.

Scope

The scope of some commands varies by parameter.

Some parameters on certain commands will display information about the entire MAS, while other parameters will display information about this member only.

For those commands that are single member scope or have some parameters that are single member scope, you might want to use the parameters for that command to get information about all members of the MAS. If so, you can use the MVS ROUTE *ALL command to issue that command to all active members (if the JES2 command character is the same on all members). See *z/OS MVS System Commands* for more information on using the ROUTE *ALL command.

Messages

The $HASP847 message is issued in response to this command. list the resulting messages.

Example

1 `$d punchdef`

```
$HASP847 PUNCHDEF  CCWNUM=49,DBLBUFR=NO,RDBLBUFR=NO
```

The $HASP847 message indicates punch characteristics.

$D PUN(nn) and $D R(nnnn).PU(m) - Display a Remote Punch

Function

To display remote punch work selection and processing characteristics.

This command has parameters you can use as a filtering technique to limit the type of information to search, or the amount of information to display. See “Using filtering to control and display information” on page 99 for additional information.

Syntax

```
►►─$D──┬─PUN──┬──┬──────────────────────────────────────────────────────────────────────────────────────────────────────────────►
       └─PUNCH─┘  │ nn──┬──────────────┬──────────────────────────────────────────────────────────────────────────────────────│
                  │     └─-──┬─nn─┬──────┘                                                                                      │
                  │          └─*──┘                                                                                             │
                  │     ┌──────────────────────────────────────────────────────────────────────────────────────────────────────│
                  │     ▼ ,                                                                                                     │
                  │     │ │                                                                                                     │
                  │     │ │                                                                                                     │
                  │     │ │
```

```
►─┬─────────────────────────────────────────────────────────────────────────────────────────────────────────────────────────────────►
  │ ┌─,─┬─────┬─SETUP─┬─=───┬─HALT───┬─┐ ┌─,─┬─────┬─STATUS─┬─=───┬─ACTIVE─┬─┐
  │ │   └─/───┘       └─^=─┘ └NOHALT─┘ │ │   └─/───┘        └─^=─┘        │ │
  │ ►─┬─────────────────────────────────────────────────────────────────────────────────────────────────────────────────────────────►
  │ │ │ ┌─,─┬─────┬─TRace─┬─=───┬─No─────┬─┐ ┌─,─┬─────┬─UNIT───┬─=───┬─unit───┬─┐ ┌─,─┬─────┬─Writer─┬─=───┬─writer─┬─┐
  │ │ │ │   └─/───┘       └─^=─┘ ├─P──────┤ │ │   └─/───┘        ├─^=─┤        │ │ │   └─/───┘        ├─^=─┤        │ │
  │ │ │ │                       └─Yes────┘ │ │                  ├─>──┤        │ │ │                  ├─>──┤        │ │
  │ │ │ │                                  │ │                  └─<──┘        │ │ │                  └─<──┘        │ │
  │ │ │ │                                  │ │                                │ │ │                                │ │
  │ │ │ │                                  │ │                                │ │ │                                │ │
  │ │ │ │                                  │ │                                │ │ │                                
```

PRMode
Displays the SYSOUT mode(s) (1-to-8 alphameric characters) processed by this remote punch. For a list of valid process-mode values, see your system programmer.

RANGE
Displays the range of batch jobs (J), started tasks (S), or time sharing users (T) whose output is selected by this punch.

Routecde
Displays as many as four internal route codes assigned to this card punch. A route code indicates that this card punch is eligible for punch routing. The value for all routing numbers can range from 1 to 32767. For specification requirements, refer to “Route Codes” on page 92.

SEPDS={Yes|No}
Displays whether (Y) or not (N) a header separator card is to be produced for each copy of each data set within an output group. JES2 invokes EXIT 15 (Output Data Set/Copy Separators) -- if enabled -- to generate separator cards.

Sep
Displays whether (YES) or not (NO) separator cards are provided initially between data set groups.

SETUP={HALT|NOHALT}
Displays whether (YES) or not (NO) JES2 is to halt the punch and issue the $HASP190 message requesting the operator to verify the output control specifications when the output requirements for a particular job differ from the output characteristics specified for the punch. (If halted, the punch must be restarted using the $S command.)

STATUS
Displays the current status of the printer, the job active on the printer, and the number of cards printed. Valid printer status values are:

- ACTIVE - JES2 is using the device for job processing and will continue to do so as long as there are jobs available and eligible for that device.
- DRAINED - JES2 is not using the device and will not do so until the device is started using a $S command.
- DRAINING - JES2 is currently using the device for the processing of jobs, but will discontinue its use upon completion of the current function.
- ENDED - A non-recoverable ABEND occurred during processing for this device. JES2 has suspended all processing for this device. At the time the device was suspended, work might still have been assigned to the device. All processing on that work has also been suspended. You need to perform a JES2 hot start to recover the device and any work assigned to it.
- HALTED - JES2 has either requested operator assistance or the operator has halted the device ($Z) and is waiting for the device to be started using a $S command.
- INACTIVE - JES2 is not using the device but would do so if jobs were available and eligible for that device.
- PAUSED - JES2 has paused between jobs during printing or punching. The specified device will not be used until it is started ($S command) or it has been reset from a not-ready to a ready state.

TRace
Displays whether (Yes) or not (No) tracing is activated for this punch processor.

UNIT
Displays a 4-digit hexadecimal device number.

Volume
Displays the 5-to 6-character volume serial number of a volume containing a spool data set.

Writer
Displays the 1 through 8 character writer name assigned to this punch.

WS
Displays the work selection criteria for this remote punch.

Authority Required

This command requires **display** authority. The description of the $T RDRnn command explains how to ensure the proper MVS system command group authority is assigned. The $T INTRDR command sets the command authority for internal readers.

This command requires **read** security access authority. For a description of assigning command input authority, see *z/OS JES2 Initialization and Tuning Guide*.

Scope

Single Member. The response to this command will be a display of information about this member only. You might want to use this command to get information about all members in the MAS. To do so, you can use the MVS ROUTE *ALL command to issue this command to all active members (if the JES2 command character is the same on all members). See *z/OS MVS System Commands* for more information on using the ROUTE *ALL command.

Messages

The $HASP603 message displays the status of the punches.

Example

```
1  $dr1.pu1,lim,f

 $HASP603 R1.PU1    LIMIT=(0,*),FORMS=STD
```

JES2 displays the forms name and the lower and upper limits for the record size of output selected by punch 1 on remote 1.

$D Q - Display the Number of Jobs Queued

Function

To display the number of jobs on a particular queue and the percentage of spool disk use.

Syntax

```
►►─$D─Q─┬──────────┬─┬──────────┬─,Q=─┬─CNV──┬─CLASS──┬──────────┬──────────────────────────────────►◄
        ├─,IND─────┤ └─,V=volser─┘     │      ├─STC│$─┤          │
        ├─,memname─┤                   │      ├─TSU│@─┤          │
        ├─,ANY─────┤                   │      └─*───┘          │
        ├─,ALL─────┤                   ├─XEQ──┬─CLASS──┬──────┤
        └─,IND─────┘                   │      ├─STC│$─┤          │
                                       │      ├─TSU│@─┤          │
                                       │      └─*───┘          │
                                       ├─OUT──────────────────┤
                                       ├─PPU──────────────────┤
                                       ├─HOLD─────────────────┤
                                       └─XMT──┬─LOCAL│ANYLOCAL─┤
                                              ├─Nnnnn│nodename─┤
                                              └─destid────────┘
```

Parameters

Q JES2 displays the number of jobs on the specified job queue.

memname
The 1 to 4 alphameric character identifier of a member in the multi-access spool configuration. JES2 displays the number of jobs on the specified queue whose affinities include the member specified by member name.

ANY
JES2 displays the number of jobs on the specified queue whose affinity is for any member in the multi-access spool configuration.

ALL
JES2 displays the number of jobs on the specified queue, regardless of affinity. The counts are given for each member in the multi-access spool configuration. A job is counted multiple times if its queued affinity includes multiple members.

IND
JES2 displays the number of jobs on the specified queue whose affinity is for members operating in independent mode.

Note: The first two operands of the $D Q command (those operands concerning affinity) are positional in nature; if entered, they must be in the order shown.

V=volser
JES2 displays job information and percentage of spool disk utilization for all jobs that have data on the spool volume specified by volser.

R=
The output group destination or range of destinations (low to high) for which job information is displayed. If you omit this operand or specify this operand without a node id when entering the command from a remote workstation or another node (through a node send command, $Nn), JES2 displays only those jobs with a default print/punch routing to that particular remote or node. Therefore, if you want to display jobs with print/punch routing of the target node, this operand

must be specified with a node id of the target node (for example, R=N2.U25 or R=NEWYORK.R41.) For further information, refer to the section on SEND commands through the network. See “Route Codes” on page 92 for additional informaiton. The value for all routing numbers can range from 1 to 32767. The valid specifications are:

LOCAL|ANYLOCAL
Indicates that the number of jobs queued is displayed at the local node.

destid Indicates that the number of jobs queued is displayed at the specified node(s) through an alias for the name of the node.

Nnnnn|nodename
Indicates that the number of jobs queued is displayed at the specified node(s) through the decimal node identifier or an EBCDIC nodename.

NnnnnRmmmm|node.remote
Indicates that the number of jobs queued is displayed at the remote Rmmmm at the node Nnnnn. Rmmmm can also be specified as RMmmmm or RMTmmmm.

Ummmm
Indicates that the number of jobs queued is displayed at a special local routing. Wildcards are not supported.

node.destid
Indicates that the number of jobs queued is displayed at a destination at the specified node. The destid refers to both the node and the remote.

remote
Indicates that the number of jobs queued is displayed at a remote destination. Remote can be specified in any of the following ways:

LOCAL|ANYLOCAL
Indicates that the number of jobs queued is displayed at the local node.

Rmmmm
Indicates that the number of jobs queued is displayed at the specified remote. Rmmmm can also be specified as RMmmmm or RMTmmmm.

destid Indicates that the number of jobs queued is displayed at a destid referring to a remote.

***** Displays all output for the local node, including special local, userid, and a remote workstation on the local node.

node.*
Displays output for all userids at the local node.

node.*-node.*
Displays all output for each node in the range. The range may include the local node.

Nnnnn-Nnnnn
Displays all output for each node in the range. The range may include the local node.

Rmmmm-Rmmmm
Displays all output for each remote in the range.

Unnnn-Unnnn
Displays all output for each special local node in the range. Wildcards are not supported.

NnnnnRmmmm-NnnnnRmmmm
Displays a range of remotes at a node. Both node identifiers must be the same.

For the second value of the destination range, all specification values from the R= parameter are valid except for *, node.* and Ummmm. Refer to the syntax diagram.

Q=CNV
JES2 displays the number of jobs waiting for conversion. You can specify one of the following values for ***cnv***:

*****
JES2 displays the number of jobs waiting for conversion in all classes (A-Z, 0-9, STC, and TSU). Specifying CNV* is equivalent to specifying CNV.

class
The execution class (A-Z, 0-9) for which jobs waiting for conversion are counted.

STC or $
JES2 displays the number of started tasks waiting for conversion. This operand can be abbreviated $.

TSU or @
JES2 displays the number of time-sharing users waiting for conversion. This operand can be abbreviated @.

Q=XEQ
JES2 displays the number of jobs waiting for execution. You can specify one of the following values for ***xeq***:

*****
JES2 displays the number of jobs waiting for execution in all classes (A-Z, 0-9, STC, and TSU). Specifying XEQ* is equivalent to specifying XEQ.

class
The execution class (A-Z, 0-9) for which jobs waiting for execution are counted.

STC or $
JES2 displays the number of started tasks waiting for execution. This operand can be abbreviated $.

TSU or @
JES2 displays the number of time-sharing users waiting for execution. This operand can be abbreviated @.

Q=OUT
JES2 displays the number of jobs waiting for output processing.

Q=PPU
JES2 displays the number of jobs waiting for print/punch processing.

Q=HOLD
JES2 displays the number of jobs waiting for any activity and in hold status.

Q=XMT
JES2 displays the number of jobs queued for execution on other nodes. See “Route Codes” on page 92 for additional information. The destination that is converted to the lower (or only) route code should be specified first, followed by

the destination with the higher route code. If, for example, NEWYORK is the node name equivalent to N1 and DENVER is the node name equivalent to N10, then Q=XMT NEWYORK-DENVER is the order required to display jobs on the transmit queue for nodes N1,N2,...N10.

The valid specifications are:

LOCAL|ANYLOCAL
Indicates that the number of jobs queued is displayed at the local node.

Nnnnn|nodename
Indicates that the number of jobs queued is displayed at the specified node through the decimal node identifier or an EBCDIC nodename. You can also specify a range (low to high).

destid Indicates that the number of jobs queued is displayed at the specified node(s) through an alias for the name of the node.

Note: Since the system only transmits jobs to NJE nodes, destinations that refer to a remote work station are converted to the node to which that remote workstation is attached.

Authority Required

This command requires **display** authority. The description of the $T RDRnn command explains how to ensure the proper MVS system command group authority is assigned.

This command requires **read** security access authority. For a description of assigning command input authority, see *z/OS JES2 Initialization and Tuning Guide*.

Processing Considerations

If you do not specify the Q= parameter, JES2 displays the number of jobs in each of the queues described above, except the HOLD queue.

Scope

MAS-Wide. This command can display information about jobs on any or all members of the MAS, depending on the parameters you provide.

Messages

JES2 issues the following messages in response to the $D Q commands:

- $HASP630 — displays the SPOOL volume status, if you specify the V= operand.
- $HASP642 — displays the number of jobs in HOLD, if you specify Q=HOLD.
- $HASP643 — displays the number of jobs in the print/punch queue.
- $HASP644 — displays the number of jobs in the output queue.
- $HASP645 — displays the number of jobs in the transmit queue (XMT).
- $HASP646 — displays the percentage of spool utilization.
- $HASP647 — displays the number of jobs on the conversion and execution queues.

Examples

1 `$dq,spl2`

```
$HASP647      1 XEQ A SPL2
$HASP647      1 XEQ H SPL2
$HASP643      3 PPU LOCAL      ANY
$HASP646  10 PERCENT SPOOL UTILIZATION
```

There is 1 job awaiting execution in class A and 1 in class H on a member identified as SPL2. There are 3 jobs in the print/punch queue. 10 percent of spool space is being used.

2 `$dq,spl2,q=hold,v=spool4`

```
$HASP642      1 HOLD SPL2
$HASP630 VOLUME SPOOL4 ACTIVE   25 PERCENT UTILIZATION
```

There is 1 job on the hold queue on a member identified as SPL2. 25 percent of volume SPOOL4 is allocated.

3

```
$dq,q=xeqc

$HASP647     1 XEQ C IBM1
$HASP647  67.8095  PERCENT  SPOOL  UTILIZATION
```

$D R(nn).CON(mm) - Display the Specified Remote Console

Function

To display the status of the specified remote console.

This command has parameters you can use as a filtering technique to limit the type of information to search, or the amount of information to display. See “Using filtering to control and display information” on page 99 for additional information.

Syntax

```
►►──$D──R──┬──────────────────────────────┬──.CON──┬──────────────────────────────┬──►
           │ nn ┬──────────┬──────────────│        │ Selection limiting keywords  │
           │    └─ - ┬────┬─┘              │        └──────────────────────────────┘
           │         │ mm │                │
           │         │ *  │                │
           │   ┌──────────────────────┐    │
           │   ▼                      │    │
           └─(─── nn ┬────┬ ┬──────────┬──)─┘
                     │ *  │ │ - ┬────┬ │
                     │    │ │   │ mm │ │
                     │    │ │   │ *  │ │
►──┬──────────────────────────────┬──────────────────────────────────────────────►◄
   │ Display limiting keywords    │
   └──────────────────────────────┘
```

Display limiting keywords:

```
├──┬──────────────┬──────────────────────────────────────────────────────────┤
   │ ,STATUS      │
   └──────────────┘
```

Selection limiting keywords:

```
├──┬──────────────────┬──────────────────────────────────────────────────────┤
   │ , ┬────┬ STATUS  │
   │   │ /  │         │
   │   └────┘         │
   └──────────────────┘
```

Parameters

Rnn.CONmm
Displays the status of the specified remote console.

STATUS
Displays information about JES2-managed devices. The following types of status can be displayed:

Type	Meaning
STARTING	The device is being started. Applies to FSS-owned devices only.
DRAINED	JES2 does not use the device until you start it with a $S command.
DRAINING	JES2 is using the device to process jobs, but will stop using this device once the current function has completed.
INACTIVE	JES2 is not using the device, but would do so if a job were both available and eligible for the device.

ACTIVE JES2 is using the device for job processing and will continue to do as long as jobs are both available and eligible for the device.

HALTED JES2 has either requested operator assistance or an operator has entered the $Z command to halt the device. To start the device, you must enter a $S command.

Authority Required

This command requires **display** authority. The description of the $T RDRnn command explains how to ensure the proper MVS system command group authority is assigned. The $T INTRDR command sets the command authority for internal readers.

This command requires **read** security access authority. For a description of assigning command input authority, see *z/OS JES2 Initialization and Tuning Guide*.

Scope

Single Member. The response to this command will be a display of information about this member only. You might want to use this command to get information about all members in the MAS. To do so, you can use the MVS ROUTE *ALL command to issue this command to all active members (if the JES2 command character is the same on all members). See *z/OS MVS System Commands* for more information on using the ROUTE *ALL command.

Messages

The $HASP603 message displays the status of the remote console.

Example

```
1  $dr1.con

 $HASP603 R1.CON    STATUS=INACTIVE
```

JES2 displays the status of remote console 1.

$D RDI - Display the Status of JES2-Controlled Internal Reader

Function

To display the status of the internal readers, including the identification of any jobs currently active on the device.

This command has parameters you can use as a filtering technique to limit the type of information to search, or the amount of information to display. See “Using filtering to control and display information” on page 99 for additional information.

Syntax

```
►►──$D──RDI──┬──────────────────────────┬──┬──────────────────────────────────────────────►
             ├─'rdi'──────────────────┤  ├─┤ Selection limiting keywords ├─┤
             │          ┌──,──────────┐  │
             └──(──┬──rdi──┬──)──┘
                   └─'rdi'─┘

►──┬──────────────────────────────────────────────────────────────────────────────────────►◄
   └─┤ Display limiting keywords ├─┘
```

Display limiting keywords:

```
├──┬──────────────────────────┬──┬─────┬──┬─────┬──┬──────────┬──┬─────┬──┬──────┬──┬──────────────────────────►
   └─,Auth──┬──────────────────────────┬──┘  └─,Class─┘  └─,HOLD─┘  └─,──┬─MSGclass─┬─┘  └─,OWNER─┘
            │          ┌──,──────────┐  │                              └─Q────────┘
            └──=(──┬──Device──┬──)──┘
                   ├─Job──────┤
                   └─System───┘

►──┬──────┬──┬──────┬──┬──────┬──┬──────┬──┤
   └─,PRTDEST─┘  └─,PUNDEST─┘  └─,Sysaff─┘  └─,TRace─┘
```

Selection limiting keywords:

```
├──┬──────────────────────────────────────────────────────────────────────────┬──┬──────────────────────────────►
   │                          ┌──,──────────────────────────────────────┐  │  └─,──┬──────┬─Class──┬──────┬─class─┘
   └─,──┬──────┬─Auth─=(──┬──────┬─Device──┬──────┬─No──┬──────┬──┬──────┬──┬─────┬─┬─────┬─┬─────┬─┬─────┬─┘
        └─/────┘          │      └─/───────┘      └─ê=─┘  └─Yes─┘  │      └─/───────┘     ê=    >    <
                          ├─────────────────────────────────────────────────────────────────────────────────┤
                          │      ┌──────┐  ┌──────┐  ┌──────┐  ┌──────┐  │
                          ├──────┤ /    ├─Job─┤ =    ├─┤ No   ├─┤ Yes  ├─┤
                          │      └──────┘  └──────┘  ê=     └──────┘  └──────┘  │
                          ├─────────────────────────────────────────────────────────────────────────────────┤
                          │      ┌──────┐  ┌──────┐  ┌──────┐  ┌──────┐  │
                          └──────┤ /    ├─System─┤ =    ├─┤ No   ├─┤ Yes  ├─┤
                                 └──────┘  └──────┘  ê=     └──────┘  └──────┘

►──┬──────┬──┬──────┬──┬──────┬──┬──────┬
```

Parameters

Auth
Displays whether (YES) or not (NO) the indicated reader has the specified authority to issue commands to the internal reader.

Class=class
Displays the default execution class (A-Z,0-9) for all jobs entered at this internal reader that do not have a job class specified on the JOB statement.

HOLD={No|Yes}
Displays whether (YES) or not (NO) all jobs read by the specified are held after JCL conversion.

MSGclass|Q=msgclass
Displays the default message class assigned to jobs entered at this internal reader that do not have a MSGCLASS specified on the JOB statement.

OWNER
JES2 displays information about the userid currently allocated to the internal reader.

PRTDEST=prtdest
Displays the default destination for the print output from all jobs that are read by the internal reader and that do not have a /*ROUTE statement or DEST parameter. The value for all routing numbers can range from 1 to 32767.

PUNDEST
Displays the default destination for the punch output from all jobs that are read by the internal reader and that do not have a /*ROUTE statement or DEST parameter.

Sysaff
Displays the default affinities assigned to jobs read by the internal reader.

TRace={Yes|No|P}
Displays whether (Yes) or not (No) tracing is activated for this print processor.

Authority Required

This command requires **display** authority. The description of the $T INTRDR command explains how to ensure the proper MVS system command group authority is assigned. The $T INTRDR command sets the command authority for internal readers.

This command requires **read** security access authority. For a description of assigning command input authority, see *z/OS JES2 Initialization and Tuning Guide*.

Scope

Single Member. The response to this command will be a display of information about this member only. You might want to use this command to get information about all members in the MAS. To do so, you can use the MVS ROUTE *ALL command to issue this command to all active members (if the JES2 command character is the same on all members). See *z/OS MVS System Commands* for more information on using the ROUTE *ALL command.

Messages

The $HASP603 message displays the status of the specified internal reader and its current characteristics.

Example

1 `$d rdi(*)`

```
$HASP603 RDI(TSOINRDR)154
$HASP603 STATUS=INACTIVE,AUTH=(DEVICE=NO,JOB=NO,
$HASP603        SYSTEM=NO),HOLD=NO,MSGCLASS=A,
$HASP603        PRTDEST=LOCAL,PUNDEST=LOCAL,
$HASP603        SYSAFF=(N1M1),TRACE=NO
$HASP603 RDI(STCINRDR)155
$HASP603 STATUS=INACTIVE,AUTH=(DEVICE=NO,JOB=NO,
$HASP603        SYSTEM=NO),HOLD=NO,MSGCLASS=A,
$HASP603        PRTDEST=LOCAL,PUNDEST=LOCAL,
$HASP603        SYSAFF=(N1M1),TRACE=NO
$HASP603 RDI(STCINRDR)156
$HASP603 STATUS=INACTIVE,AUTH=(DEVICE=NO,JOB=NO,
$HASP603        SYSTEM=NO),HOLD=NO,MSGCLASS=A,
$HASP603        PRTDEST=LOCAL,PUNDEST=LOCAL,
$HASP603        SYSAFF=(ANY),TRACE=NO
```

JES2 displays the status of all internal readers.

$D RDR(nn) and $D R(nn).RD(mm) - Display Command Authority for a Reader

Function

- To display command authority for the specified reader.
- To display default routing, affinities for member(s) of the MAS, job and message classes for jobs read by the specified reader.
- To display whether the JES2 processor is starting or stopping tracing on the specified reader.

This command has parameters you can use as a filtering technique to limit the type of information to search, or the amount of information to display. See “Using filtering to control and display information” on page 99 for additional information.

Syntax

```
►►─$D──┬─RDR────┬──┬──────────────────────────────────────────┬──┬──────────────────────────►
       └─READER─┘  │ nn──┬──────────┬──────────────────────────│  │ L=──┬─a──────┬
                   │     └─-──┬─nn─┬─┘                          │  │     ├─cc─────┤
                   │          └─*──┘                            │  │     ├─cca────┤
                   │  ┌──────────────────────────────────────┐  │  │     ├─name───┤
                   │  ▼                                      │  │  │     └─name-a─┘
                   └─(──┬─nn─┬──┬──────────┬──────────────────)─┘  │
                        └─*──┘  └─-──┬─nn─┬─┘                     │
                                     └─*──┘

►──┬──────────────────────────────────────────────────────────────────────────────────────►◄
   └┤ Selection limiting keywords ├┘  └┤ Display limiting keywords ├┘
```

Display limiting keywords:

```
├──┬──────────────────────────────┬──┬─────────┬──┬─────────┬──┬──────────┬──┬──────────┬──►
   └─,Auth──┬──────────────────────┬─┘  └─,Class─┘  └─,Hold─┘  └─,──┬─MSGclass─┬─┘  └─,PRIOINC─┘
            │  ┌──────────────────┐ │                             └─Q────────┘
            │  ▼                  │ │
            └─=(──┬─Device─┬──────)─┘
                  ├─Job────┤
                  └─System─┘

►──┬──────────┬──┬──────────┬──┬──────────┬──┬──────────┬──┬──────────┬──┬──────────┬──►
   └─,PRIOLIM─┘  └─,──┬─P────────┬─┘  └─,──┬─PUNDEST─┬─┘  └─,STATUS─┘  └─,Sysaff─┘  └─,TRace─┘  └─,UNIT─┘
                      └─PRTDEST─┘        └─U───────┘

►──┬──────────┬──────────────────────────────────────────────────────────────────────────┤
   └─,Xeqdest─┘
```

Selection limiting keywords:

```
├──┬──────────────────────────────────────────────────────────────────────────────────────►
   │  ┌──────────────────────────────────────────────────────────────────────────────┐
   │  ▼                                                                              │
   └─,──┬──────┬─Auth─=(──┬──────┬─Device──┬─=──┬─No──┬──┬──────┬─Job──┬─=──┬─No──┬──┬──────┬─System─┬─=──┬─No──┬──)─┬─┬─,──┬──────┬─Class──┬─=──┬─class─┬─┤
          └─/────┘        │ └─/────┘        │ └─^=─┘ └─Yes─┘  │ └─/────┘        │ └─^=─┘ └─Yes─┘  │ └─/────┘        │ └─^=─┘ └─Yes─┘  │   │  └─/────┘        ├─^=──┤
                          │                 │                 │                 │                 │                 │                 │   │                  ├─>───┤
                          │                 │                 │                 │                 │                 │                 │   │                  └─<───┘
                          │                 │                 │                 │                 │                 │                 │   │
                          │                 │                 │                 │                 │                 │                 │   │
                          │                 │                 │                 │                 │                 │                 │   │
```

```
►──┬──────────────────────────────────────────────────────────────────────────────────────────────────────────────►
   │ ,──┬──/──┬──Hold──┬──=──┬──┬──No──┬──┬ ,──┬──/──┬──MSGclass──┬──┬──=──┬──msgclass──┬
   │    │     │        │     │  │      │  │    │     │            │  │     │            │
   │    │     │        │     │  │      │  │    │     │            │  │     │            │
   │    │     │        │     │  │      │  │    │     │            │  │     │            │
```

Rnn.RDmm
The remote reader affected by this command.

Auth
Displays whether (YES) or not (NO) the indicated reader has the specified authority to issue commands to the local reader. A reader can have Device, Job, or System authority. These levels of authority are **not** mutually exclusive.

Class=class
Displays the default execution class (A-Z, 0-9) for all jobs entered at this remote reader that do not have a job class specified on the JOB statement.

Hold={No|Yes}
Displays whether (Y) or not (N) all jobs read by the specified reader are held after JCL conversion. You can release these jobs on an individual basis using the $A command.

In an NJE environment, if a job contains a /*ROUTE XEQ or /*XEQ JES2 control statement specifying another node for execution, the job is not held at the entry node, but at the execution node (that is, the node which performs the JCL conversion).

MSGclass|Q=msgclass
Displays the default message class assigned to jobs entered at this remote reader that do not have a MSGCLASS specified on the JOB statement.

PRIOINC=prioinc
Displays the number (0-15) to be added to the selection priority of each job entered at this card number.

PRIOLIM=priolim
Displays the maximum priority level (0-15) that can be assigned to jobs entered at this card reader. Any job's priority that exceeds this level will be reduced to it.

PRTDEST|P
Displays the default destination for the print output from all jobs that are read by the specified reader and that do not have a /*ROUTE statement or DEST parameter. The value for all routing numbers can range from 1 to 32767. For specification requirements, see "Route Codes" on page 92.

PUNDEST|U
Displays the default destination for the punch output from all jobs that are read by the specified reader and that do not have a /*ROUTE statement or DEST parameter.

STATUS
Displays the status of the reader.

Sysaff
Displays the default affinities assigned to jobs read by the specified reader.

TRace={No|P|Yes}
Displays whether (Yes) or not (No) tracing is activated for this print processor.

UNIT=unit
Displays a 4-digit hexadecimal device number.

Xeqdest
Displays the default execution node for all jobs that are read by the specified reader and that do not specify a /*XEQ statement.

L=a|cc|cca|name|name-a
The area (a), console identifier (cc), area and console identifier (cca), symbolic

console name (name), or symbolic console name and output area (name-a) of the active MCS console at which the requested display appears.

Authority Required

This command requires **display** authority. The description of the $T RDRnn command explains how to ensure the proper MVS system command group authority is assigned. The $T INTRDR command sets the command authority for internal readers.

This command requires **read** security access authority. For a description of assigning command input authority, see *z/OS JES2 Initialization and Tuning Guide*.

Scope

Single Member. The response to this command will be a display of information about this member only. You might want to use this command to get information about all members in the MAS. To do so, you can use the MVS ROUTE *ALL command to issue this command to all active members (if the JES2 command character is the same on all members). See *z/OS MVS System Commands* for more information on using the ROUTE *ALL command.

Messages

The $HASP603 message displays the status of the readers.

Examples

1 `$dr1.rd(*),msg,xeqdest`

```
$HASP603 R1.RD1    MSGCLASS=A,XEQDEST=LOCAL
```

JES2 displays only the message class and execution class for all readers attached to remote reader 1.

2 `$dr(*).rd(*),msg,xeqdest`

```
$HASP603 R1.RD1    MSGCLASS=A,XEQDEST=LOCAL
$HASP603 R2.RD1    MSGCLASS=A,XEQDEST=LOCAL
$HASP603 R3.RD1    MSGCLASS=A,XEQDEST=LOCAL
$HASP603 R4.RD1    MSGCLASS=A,XEQDEST=LOCAL
$HASP603 R5.RD1    MSGCLASS=A,XEQDEST=LOCAL
$HASP603 R24.RD1   MSGCLASS=A,XEQDEST=LOCAL
```

JES2 displays the message class and execution class for all readers attached to all the remotes in the MAS member.

$D REBLD - Display Rebuild Queue Information

Function

To display the job output elements (JOEs) and job queue elements (JQEs) on the rebuild queue and the total number of each.

This command is useful:

- If you received messages indicating that JOEs or JQEs are pending discard and you require further information. ($HASP440 for a JOE; $HASP517 for a JQE).
- If in response to a job-oriented command ($D J or $L J) JES2 indicates that jobs or OUTGRP are not found, these missing jobs might be on the rebuild queue.
- If in response to a $D JOBDEF command, JES2 indicates there are jobs on the rebuild queue (JOBRBLDQ).
- If in response to a $D OUTDEF command, JES2 indicates there are JOEs on the rebuild queue (JOERBLDQ).
- If in response to a $D MASDEF command, JES2 indicates that the queues have been rebuilt one or more times QREBUILD=n).

Syntax

```
►►──$D──REBLD──────────────────────────────────────────────────────────────►◄
```

Authority Required

This command requires **display** authority. The description of the $T RDRnn command explains how to ensure the proper MVS system command group authority is assigned.

This command requires **read** security access authority. For a description of assigning command input authority, see *z/OS JES2 Initialization and Tuning Guide*.

Scope

MAS-Wide. This command has an effect across the entire MAS.

Messages

The $HASP890 message displays all the jobs (JOEs) and the $HASP686 message displays all the output elements (JQEs) on the rebuild queue.

The $HASP890 message displays all the jobs (JOEs) and the $HASP686 message displays all the job queue elements (JQEs) on the rebuild queue.

Examples

1 `$d rebld`

```
JOB00000  $HASP890 JOB(USRCLASA)
$HASP890 JOB(USRCLASA) STATUS=(AWAITING OUTPUT),CLASS=A,
$HASP890               PRIORITY=15,SYSAFF=(ANY),HOLD=(NONE),
$HASP890               REBUILD=YES
$STC0000  $HASP890 JOB(INIT)
$HASP890 JOB(INIT)     STATUS=(EXECUTING/N503),CLASS=STC,
$HASP890               PRIORITY=15,SYSAFF=(N503),HOLD=(NONE),
$HASP890               REBUILD=YES
JOB00006  $HASP686 OUTPUT(USRCLASB)
```

```
$HASP686 OUTPUT(USRCLASB)  OUTGRP=23.1.1,HOLD=(NONE),HOLDRC=,
$HASP686                   OUTDISP=WRITE,PAGES=,PRIORITY=144,
$HASP686                   QUEUE=A,RECORDS=(223 OF 223),
$HASP686                   ROUTECDE=LOCAL,TSOAVAIL=NO,
$HASP686                   USERID=D15USER,REBUILD=YES
$HASP685 2 JOBS ON REBUILD QUEUE, 1 JOES ON REBUILD QUEUE
```

2 `$d rebld`

```
STC00000  $HASP890 JOB(INIT)
$HASP890 JOB(INIT)     STATUS=(EXECUTING/N504),CLASS=A,
$HASP890               PRIORITY=15,SYSAFF=(N504),HOLD=(NONE),
$HASP890               REBUILD=YES
JOB00000  $HASP890 JOB(USRCLASA)
$HASP890 JOB(USRCLASA) STATUS=(AWAITING OUTPUT),CLASS=A,
$HASP890               PRIORITY=15,SYSAFF=(ANY),HOLD=(NONE),
$HASP890               REBUILD=YES
STC00000  $HASP890 JOB(INIT)
$HASP890 JOB(INIT)     STATUS=(EXECUTING/N503),CLASS=STC,
$HASP890               PRIORITY=15,SYSAFF=(N503),HOLD=(NONE),
$HASP890               REBUILD=YES
$HASP685 3 JOBS ON REBUILD QUEUE, 0 JOES ON REBUILD QUEUE
```

JES2 displays JOEs and JQEs on the rebuild queue.

$D RECVopts - Display Current RECVOPTS Settings

Function

To display the current RECVOPTS settings for types of errors.

Syntax

```
►►──$D──RECVopts──┬──────────────────────────┬──┬──────────┬──┬──────────────┬──►◄
                  │─'type'─────────────────────│  │─,COUNT───│  │─,INTERVAL────│
                  │          ┌──────────────┐  │  │          │  │              │
                  │──(──────┬─type──────────┴─)──│  │          │  │              │
                  │         └─'type'─────────┘  │  │          │  │              │
```

Parameters

RECVopts(type|*)
The $HASP846 message displays the current RECVOPTS settings for the specified types of errors.

COUNT
For the MAIN type COUNT= specifies the number (1-99) of errors (within the INTERVAL= time period) below which the operator will not become involved in the recovery process.

INTERVAL
Specifies the number of hours (0-9999) in the current interval in which JES2 is counting errors.

Authority Required

This command requires **display** authority. The description of the $T RDRnn command explains how to ensure the proper MVS system command group authority is assigned.

This command requires **read** security access authority. For a description of assigning command input authority, see *z/OS JES2 Initialization and Tuning Guide*.

Scope

The scope of some commands varies by parameter.

Some parameters on certain commands will display information about the entire MAS, while other parameters will display information about this member only.

For those commands that are single member scope, or have some parameters that are single member scope, you might want to use the parameters for that command to get information about all members of the MAS. If so, you can use the MVS ROUTE *ALL command to issue that command to all active members (if the JES2 command character is the same on all members). See *z/OS MVS System Commands* for more information on using the ROUTE *ALL command.

Messages

The individual parameter descriptions list the resulting messages.

Example

1 `$D RECVOPTS`

```
$HASP846 RECVOPTS(MAIN)      COUNT=1,INTERVAL=1
$HASP846 RECVOPTS(DISTERR)   COUNT=1,INTERVAL=24
$HASP846 RECVOPTS(CKPT)      COUNT=1,INTERVAL=24
$HASP846 RECVOPTS(PQE)       COUNT=1,INTERVAL=24
$HASP846 RECVOPTS(IMAGE)     COUNT=1,INTERVAL=24
$HASP846 RECVOPTS(ALLOCATE)  COUNT=1,INTERVAL=24
$HASP846 RECVOPTS(SPOOL)     COUNT=1,INTERVAL=24
$HASP846 RECVOPTS(SMF)       COUNT=1,INTERVAL=24
$HASP846 RECVOPTS(VTAM)      COUNT=1,INTERVAL=24
$HASP846 RECVOPTS(WTO)       COUNT=1,INTERVAL=24
$HASP846 RECVOPTS(CONVERT)   COUNT=1,INTERVAL=24
$HASP846 RECVOPTS(OFFLOAD)   COUNT=1,INTERVAL=24
$HASP846 RECVOPTS(CKPTVRNS)  COUNT=1,INTERVAL=24
$HASP846 RECVOPTS(GENERAL)   COUNT=1,INTERVAL=24
$HASP846 RECVOPTS(CKPTONCF)  COUNT=1,INTERVAL=24
```

$D REDIRect - Redirect Command Responses

Function

To allow the operator to display redirection targets of command responses. These responses are to commands entered at a particular console.

Syntax

```
►►──$D──REDIRect──┬──entry_console──┬──────────────────┬──┬──────────────────────────────────────────────────►
                  │                 └──-──┬──entry_console──┬──┘  │  ┌──,DA──┐  ┌──,DCONNECT──┐
                  │                       └──*──────────────┘     │  └───────┘  └─────────────┘
                  ├──'entry_console'──────────────────────────────┤
                  │      ┌──,──────────────────────────────┐      │
                  │      ▼                                 │      │
                  └──(───┬──┬──entry_console──┬──┬──────────┬──┬──┬──)──┘
                         │  └──*──────────────┘  └──-──┬──entry_console──┬──┘  │
                         │                             └──*──────────────┘     │
                         ├──entry_console──────────────────────────────────────┤
                         └──'entry_console'────────────────────────────────────┘

►──┬──,DEF──┬──┬──,DF──┬──┬──,DI──┬──┬──,──┬──DJ──┬──┬──,DN──┬──┬──,DNODE──┬──┬──,DQ──┬──┬──,DSPL──┬──┬──,DU──┬──►
   │        │  │       │  │       │  │     ├──DS──┤  │       │  │          │  │       │  │         │  │       │
   │        │  │       │  │       │  │     └──DT──┘  │       │  │          │  │       │  │         │  │       │

►──┬──,──┬──LJ──┬──┬──────────────────────────────────────────────────────────────────────────────────────────►◄
   │     ├──LS──┤  │
   │     └──LT──┘  │
```

Parameters

entry_console
Specifies the active MCS console. If you enter any redirected commands from this console, it displays responses to those commands at another console or area. * specifies the redirection for all consoles that have any redirection set up on them. Do not specify a console area.

cmd
Specifies the group of JES2 commands to be affected. You can specify more than one command.

The allowed list of display commands includes the following:

DA	Display active job
DCONNECT	Display JES2 network connections
DEF	Display JES2 parameter definitions
DF	Display forms queue
DI	Display initiators
DJ|DS|DT	Display JOB, STC, TSU information
DN	Display queued jobs
DNODE	Display NJE nodes
DQ	Display number of queued jobs
DSPL	Display spool volumes
DU	Display units
LJ|LS|LT	List JOB, STC, TSU output

Authority Required

This command requires **display** authority. The description of the $T RDRnn command explains how to ensure the proper MVS system command group authority is assigned. The $T INTRDR Command sets the command authority for internal readers.

This command requires **read** security access authority. For a description of assigning command input authority, see *z/OS JES2 Initialization and Tuning Guide*.

Scope

Single Member. The response to this command will be a display of information about this member only. There is no need to issue this command for all members of the MAS.

Messages

The $HASP818 message is issued in response to this command. If no redirection has been set up for the specified entry console, the $HASP003 RC=52 message indicates that the operator entered the command incorrectly.

Examples

```
1  $d redirect(cn3e0)
 $HASP818 REDIRECT(CN3EO)     DA=CN3EO,DF=CN3EO,DI=CN3EO,DJ=
                              CN3EO,DN=CN3EO,DQ=CN3EO,DU=CN3EO,
                              DCONNECT=CN3EO,DNODE=320,DEF=
                              CN3EO,DSPL=CN3EO,LJ=CN3EO
```

Shows what redirection has been set up for console CN3E0.

```
2  $d redir(*)
 $HASP818 REDIRECT(CN320)     DA=CN3EO-A,DF=CN320,DI=CN320,DJ=
                              CN320,DN=CN320,DQ=CN320,DU=CN320,
                              DCONNECT=CN320,DNODE=CN320,DEF=
                              CN320,DSPL=CN320,LJ=CN320
 $HASP818 REDIRECT(CN3EO)     DA=CN3EO,DF=CN3EO,DI=CN3EO,DJ=
                              CN3EO,DN=CN3EO,DQ=CN3EO,DU=CN3EO,
                              DCONNECT=CN3EO,DNODE=CN320,DEF=
                              CN3EO,DSPL=CN3EO,LJ=CN3EO
```

Shows the redirection for all consoles that have any redirection set up on them.

```
3  $d redirect(cn3e0),da,di
 $HASP818 REDIRECT(CN3EO)     DA=CN3EO-A,DI=CN320
```

Shows what redirection has been set up on console CN3E0 for the $da and $di commands.

```
4  $d redirect(1)
 $HASP818 REDIRECT(1)         DA=CN3EO,DF=CN EO,DI=CN3EO,DJ=CN3EO,DN=
                              CN3EO,DQ=CN3EO,DU=CN3EO,DCONNECT=CN3EO
                              DNODE=CN320,DEF=CN3EO,DSPL=CN3EO,LJ=
                              CN3EO
```

Shows what redirection has been set up on console 1(CN3EO).

$D REQJOBID - Display Attributes of JOBID Address Spaces

Function

Displays the attributes to be assigned to Request JOBID address spaces.

Syntax

```
►►──$D──REQJobid──┬──────────┬──────────────────────────────────────────►◄
                  └─,JESLOG──┘
```

Parameters

JESLOG
Display the current system setting for spinning off JESLOG data (JESMSGLG and JESYSMSG data sets).

Note: `$HASP860 JESLOG=xxxxxxxx` is written to the console in response to this display command. See *z/OS JES2 Messages* for details concerning $HASP860.

Authority Required

This command requires **display** authority. The description of the $T RDRnn command explains how to ensure the proper MVS system command group authority is assigned.

This command requires **control** security access authority. For a description of assigning command input authority, see *z/OS JES2 Initialization and Tuning Guide*.

Processing Considerations

None.

Scope

Single Member. The response to this command will be a display of information about this member only. You might want to use this command to get information about all members in the MAS. To do so, you can use the MVS ROUTE *ALL command to issue this command to all active members (if the JES2 command character is the same on all members). See *z/OS MVS System Commands* for more information on using the ROUTE *ALL command.

Messages

The HASP860 message displays the current REQJOBID concatenation.

Example

1

```
$dreqjobid
$HASP860 REQJOBID  JESLOG=(NOSPIN)
```

Display

$D SMFDEF - Display Status of SMF Buffers

Function

To display the current status of System Management Facility (SMF) buffers.

Syntax

```
►►──$D──SMFDEF──┬──────────┬──┬──────────┬──┬──────────┬──────────────────────────────►◄
                └─,BUFFREE─┘  └─,BUFNUM──┘  └─,BUFWARN─┘
```

Parameters

SMFDEF
The $HASP841 message displays the current status of System Management Facility (SMF) buffers.

BUFFREE
Displays the number of SMF buffers which are currently not in use.

BUFNUM
Specifies the number (0-10000) of system management facilities (SMF) buffers JES2 obtains.

BUFWARN
Specifies the percentage (0-100) of SMF buffers in use at which the operator will be alerted.

Authority Required

This command requires **display** authority. The description of the $T RDRnn command explains how to ensure the proper MVS system command group authority is assigned.

This command requires **read** security access authority. For a description of assigning command input authority, see *z/OS JES2 Initialization and Tuning Guide*.

Scope

The scope of some commands varies by parameter.

Some parameters on certain commands will display information about the entire MAS, while other parameters will display information about this member only.

For those commands that are single member scope, or have some parameters that are single member scope, you might want to use the parameters for that command to get information about all members of the MAS. If so, you can use the MVS ROUTE *ALL command to issue that command to all active members (if the JES2 command character is the same on all members). See *z/OS MVS System Commands* for more information on using the ROUTE *ALL command.

Messages

The individual parameter descriptions list the resulting messages.

Example

1 `$d smfdef`

```
$HASP841 SMFDEF   BUFNUM=53,BUFFREE=53,BUFWARN=80
```

$D SPOOL - Display the Status of Spool Volumes

Function

To display the status and percent utilization of a specified spool volume or all spool volumes.

Syntax

```
►►──$D──┬─SPL───┬──┬──────────────────────────────────────────────────────────────┬──┬─ Selection limiting keywords ─┬──►
        └─SPOOL─┘  │─nn──┬──────────┬──────────────────────────────────────────│  │                               │
                   │     └─-──┬─mm─┬─┘                                          │  │                               │
                   │          └─*──┘                                            │  │                               │
                   │─'volume'──────────────────────────────────────────────────│  │                               │
                   │                ┌─,──────────────────────────────────────┐   │  │                               │
                   │                │                                        │   │  │                               │
                   │─(──────────────┴──┬─nn──┬──┬──────────┬──────────────────┴─)─│  │                               │
                   │                   │─*───┘  │─-──┬─mm─┬─┘                    │  │                               │
                   │                   │        │    └─*──┘                      │  │                               │
                   │                   │─volume─────────────┬──────────────────┬──│  │                               │
                   │                   │─'volume'───────────│─-volume──────────│  │  │                               │
                   │                   └─*──────────────────└─-'volume'────────┘  │  │                               │
                   └────────────────────────────────────────────────────────────┘  │  │                               │
►──┬─ Display limiting keywords ─┬──►◄
  │                             │
```

Display limiting keywords:

```
├──┬─,ALL──┬──┬─,COMMAND─┬──┬─,Long──┬──┬─,PERCENT─┬──┬─,STATUS──┬──┬─,Sysaff──┬──┬─,TGINUSE─┬──┬─,TGNUM──┬──►
   │       │  │          │  │        │  │          │  │          │  │          │  │          │  │         │
►──┴─,TRKPERTGB─┴──┬─,UNITDATA──────────────────────────────┬──┬─,Volume─┴──┤
                   │                ┌─,──────────────────┐  │
                   │                │                    │  │
                   └─=(─────────────┴─BASETRAK──┬──────┬──┴─)─┘
                                      │─EXTent───┬───┬─│
                                      │  └─M─────┘   │
                                      │─Recmax───────│
                                      │─TRKPERCYL────│
                                      └─TRKrange─────┘
                                        └─TTrange────┘
```

Selection limiting keywords:

```
├──┬─,──┬──┬─PERCENT──┬─=──┬─percent─┬──┬─,──┬──┬─STATUS──┬─=──┬─ACTIVE───┬──►
   │    │  │          │ ¬=─│         │  │    │  │         │ ¬=─│─DRAINING─│
   │    └─/─┘          │ >──│         │  │    └─/─┘         └────│─HALTING──│
   │                   └ <──┘         │  │                      │─INACTIVE─│
   │                                  │  │                      └─STARTING─┘

►──┬─,──┬──┬─Sysaff──┬─=──┬─sysaff─┬──┬─,──┬──┬─TGINUSE──┬─=──┬─tginuse─┬──┬─,──┬──┬─TGNUM──┬─=──┬─tgnum─┬──►
   │    │  │         │ ¬=─│        │  │    │  │          │ ¬=─│         │  │    │  │        │ ¬=─│       │
   │    └─/─┘         └────│        │  │    └─/─┘          │ >──│         │  │    └─/─┘        │ >──│       │
   │                      └────────┘  │                   └ <──┘         │  │                 └ <──┘       │

►──┬─,──┬──┬─TRKPERTGB──┬─=──┬─trkpertgb─┬──┤
   │    │  │            │ ¬=─│           │
   │    └─/─┘            │ >──│           │
   │                     └ <──┘           │
```

```
►──┬──────────────
```

TRKPERTGB=trkpertgb
Displays the number of tracks in each track group on this spool volume.

UNITDATA=[BASETRAK|EXTent|M|Recmax|TRKPERCYL]
Displays extended information about the spool volume.

BASETRAK=
Displays the base rack address if relative addressing is in use for this volume.

EXTent|M
The extent number (in hex) that JES2 has assigned this volume.

TRKrange|TTrange
The range of tracks on this volume that the spool data set occupies.

Recmax
The maximum record number within a track that JES2 will use.

TRKPERCYL
The number of tracks per cylinder on the spool device.

Volume=volser
Only volumes matching the specified volser will be displayed.

Related Commands

To display jobs with more than a specified amount of spool space or space on specific spool volumes, use the $D JOBQ,SPOOL= command.

Authority Required

This command requires **display** authority. The description of the $T INTRDRnn command explains how to ensure the proper MVS system command group authority is assigned.

This command requires **read** security access authority. For a description of assigning command input authority, see *z/OS JES2 Initialization and Tuning Guide*.

Scope

MAS-Wide. This command displays information about the entire MAS.

Messages

The $HASP893 message displays information about individual spool volumes.

The $HASP646 message displays the percentage of total spool space in the MAS that is in use.

Examples

1 `$d spl`

```
$HASP893 VOLUME(SPOOL1)  STATUS=ACTIVE,PERCENT=84
$HASP893 VOLUME(SPOOL2)  STATUS=ACTIVE,PERCENT=92
$HASP646 88.1904 PERCENT SPOOL UTILIZATION
```

The total utilization of all spool volumes is displayed, as well as the status and total utilization of each individual spool volume.

2 `$dspl(spool1)`

```
$HASP893 VOLUME(SPOOL1)  STATUS=ACTIVE,PERCENT=84
$HASP646 88.1904 PERCENT SPOOL UTILIZATION
```

The total utilization of all spool volumes is displayed, as well as the status and total utilization of spool volume SPOOL1.

3

```
$dspl(spool1),long

 $HASP893 VOLUME(SPOOL1)
 $HASP893 VOLUME(SPOOL1)  STATUS=ACTIVE,SYSAFF=(ANY),TGNUM=525
 $HASP893 TGINUSE=141,TRKPERTGB=1,PERCENT=26
 $HASP646 88.1904 PERCENT SPOOL UTILIZATION
```

The total utilization of all spool volumes is displayed, as well as the status, the list of member(s) the spool volume is associated with, total utilization, and track group information about spool volume SPOOL1.

4 `$dspl(*),unitdata`

```
          $HASP893 VOLUME(SPOOL1)
$HASP893 VOLUME(SPOOL1)  UNITDATA=(EXTENT=00,TRKRANGE=(0087,
$HASP893                 0293),RECMAX=12,TRKPERCYL=15)
          $HASP893 VOLUME(SPOOL2)
$HASP893 VOLUME(SPOOL2)  UNITDATA=(EXTENT=01,TRKRANGE=(0001,
$HASP893                 001E),BASETRAK=00000E,RECMAX=10,
$HASP893                 TRKPERCYL=15)
          $HASP646 2.5225 PERCENT SPOOL UTILIZATION
```

Unit-specific information about spool volumes SPOOL1 and SPOOL2 is displayed. Note that SPOOL1 is using absolute addressing and SPOOL2 is using relative addressing.

5

```
$dspl,sysaff

 $HASP893 VOLUME(SPOOL1) SYSAFF=(ANY)
 $HASP893 VOLUME(SPOOL2) SYSAFF=(PSU1)
 $HASP893 VOLUME(SPOOL3) SYSAFF=(ANY)
 $HASP893 VOLUME(SPOOL4) SYSAFF=()
 $HASP893 VOLUME(SPOOL5) SYSAFF=(PSU1,IBM1,NIH1)
 $HASP646 43.2679 PERCENT SPOOL UTILIZATION
```

The member(s) with which all spool volumes are associated is displayed.

$D SPOOLDEF - Display the JES2 Spooling Environment

Function

To display the JES2 spooling environment characteristics.

Syntax

```
►►──$D──SPOOLDEF──┬──────────┬──┬──────────┬──┬──────────┬──┬──────────────────────────┬──┬──────────┬──►
                  └,BUFSIZE──┘  └,DSNAME───┘  └,Fence────┘  │  ┌──────────────────────┐  │  └,LASTSVAL─┘
                                               │            │  │  ┌──────────────────┐  │  │
                                               │            │  │  ▼  ┌─────────────┐  │  │
                                               │            │  └─=(──┬──ACTive─────┬──)──┘  │
                                               │            │        └──VOLumes────┘        │
                                               │            └───────────────────────────────┘

►──┬──────────┬──┬──────────┬──┬──────────┬──┬──────────┬──┬──────────────────────────┬──┬──────────┬──►
   └,RELADDR─┘  └,SPOOLNUM─┘  └,TGSIZE───┘  └,TGSPACE────┘  │  ┌──────────────────────┐  │  └,TRKCELL─┘
                                               │            │  │  ┌──────────────────┐  │  │
                                               │            │  │  ▼  ┌─────────────┐  │  │
                                               │            │  └─=(──┬──ACTIVE─────┬──)──┘  │
                                               │            │        ├──DEFINED────┤        │
                                               │            │        ├──FREE───────┤        │
                                               │            │        ├──MAX────────┤        │
                                               │            │        ├──%──┬───────┤        │
                                               │            │        │    └PERCENT┘        │
                                               │            │        └──WARN───────┘        │
                                               │            └───────────────────────────────┘

►──┬──────────┬──────────────────────────────────────────────────────────────────────────────────►◄
   └,Volume──┘
```

Parameters

BUFSIZE

The BUFSIZE parameter displays the size (1944-3992 in bytes) of each JES2 buffer.

Scope: MAS-Wide.

DSNAME

The DSNAME parameter displays a 1 to 44 character name which is to be used as the data set name of the JES2 spool data set. This data set is normally named SYS1.HASPACE, but its name can be changed.

Scope: MAS-Wide.

FENCE

The FENCE parameter displays how track groups for jobs will be assigned across spool volumes.

ACTIVE=YES|NO

Determines whether (YES) or not (NO) any fencing is active at the time.

VOLUMES=nnn

Is the number of volumes a job will be fenced to.

Scope: MAS-Wide.

LASTSVAL

Displays the time (GMT time) of the last spool validation (yyyy/ddd,hh:mm:ss). This time stamp represents the last time the system was either cold started or spool=validate was issued on a warm start.

This is used for diagnosis purposes, and the time stamp will be generated in one of three ways:

- Cold start
- Warm start with spool=validate
- JES2 initiated spool=validate when there is a detected error. The source of this error will be reported via message $HASP492

Scope: MAS-Wide.

RELADDR
Displays what SPOOL addressing scheme will be used for new volumes that are started.

Scope: MAS-Wide.

SPOOLNUM
The SPOOLNUM parameter displays the maximum number (1-253, rounded up to a multiple of 32 to 253) of spool volumes defined to a JES2 MAS configuration.

Scope: MAS-Wide.

TGSIZE
Displays the number (1-255) of JES2 buffers in a track group. JES2 uses this parameter to determine the size of a track group on a new spool volume being added to the complex.

Scope: Single Member.

TGSPACE=[ACTIVE|DEFINED|FREE|MAX|PERCENT| WARN]
The TGSPACE parameter displays the number of track groups on spool volumes. Information displayed for the type of spool volume follows:

- ACTIVE - the total number of track groups on all available spool volumes.
- DEFINED - the total number of track groups on all defined spool volumes.
- FREE - the total number of track groups on all available spool volumes that are currently unallocated.
- MAX - the maximum number of track groups that can be used in the complex.
- PERCENT - The current percentage of the total amount of spool space that is in use.
- WARN - the percentage of used track groups at which the operator will be alerted through message $HASP050 JES2 RESOURCE SHORTAGE.

Scope: MAS-Wide.

TRKCELL
The TRKCELL parameter displays the size of a track cell in terms of spool buffers (1-120); that is, TRKCELL displays the number of direct-access spool records to be logically ordered on a spool track and the number of records to be despooled (read from the spool) in one operation during print processing.

Scope: MAS-Wide.

VOLUME
The VOLUME parameter displays the 4- to 5-character prefix assigned to JES2 spool volumes.

Scope: MAS-Wide.

Authority Required

This command requires **display** authority. The description of the $T RDRnn command explains how to ensure the proper MVS system command group authority is assigned.

This command requires **read** security access authority. For a description of assigning command input authority, see *z/OS JES2 Initialization and Tuning Guide*.

Scope

The scope of this command varies by parameter.

Some parameters on this command will display information about the entire MAS, while other parameters will display information about this member only.

You might want to use the parameters for this command to get information about all members of the MAS. If so, you can use the MVS ROUTE *ALL command to issue this command to all active members (if the JES2 command character is the same on all members). See *z/OS MVS System Commands* for more information on using the ROUTE *ALL command.

Messages

The $HASP844 message displays the current values of all the parameters on the SPOOLDEF initialization statement.

The LASTSVAL parameter displays the time of the last spool validation (yyyy/ddd,hh:mm:ss). This parameter cannot be specified by command because it is display-only.

Example

1 `$d spooldef`

```
$HASP844 SPOOLDEF  BUFSIZE=3992,DSNAME=SYS1.HASPACE,
$HASP844           FENCE=(ACTIVE=NO,VOLUMES=1),
$HASP844           LASTSVAL=(2001.157,19:43:32),RELADDR=NEVER,
$HASP844           SPOOLNUM=32,TGSIZE=6,TGSPACE=(MAX=16288,
$HASP844           DEFINED=525,ACTIVE=525,PERCENT=1.7142,
$HASP844           FREE=516,WARN=80),TRKCELL=3,VOLUME=SPOOL
```

JES2 displays all current spooling environment characteristics.

$D SSI(nnn) - Display Subsystem Interface Function Information

Function

To display information about a subsystem interface (SSI) function. This information is helpful in diagnosing a JES2 problem. This information includes the virtual address of an SSI entry point in storage, a short description of the SSI function, and whether tracing is active or not.

This command has parameters you can use as a filtering technique to limit the type of information to search, or the amount of information to display. See “Using filtering to control and display information” on page 99 for additional information.

Syntax

```
►►──$D──SSI──┬──────────────────────────────────────────────┬──┬──────────────────────────────────────────────┬──►
             │┌──────────────────────────────────────────┐  │  │┌──────────────────────────────────────────┐  │
             ├┤ nnn ├──┬──────────────────────────────────┤  │  ├┤ Selection limiting keywords ├──────────────┤
             │          │┌──────────────────────────────┐  │  │
             │          ├┤ - ├──┬──────────────────────┤  │  │
             │          │  │   │┌──────────────────────┐  │  │
             │          │  │   ├┤ nnn ├────────────────┤  │  │
             │          │  │   │┌──────────────────────┐  │  │
             │          │  │   ├┤ * ├────────────────┤  │  │
             │          │  │   │                      │  │  │
             │          │  │   │                      │  │  │
             │          │  │   │                      │
```

TRACE parameter without a keyword, or you can specify a trace keyword (Y or N) to request information about all SSI functions where tracing has been activated (Y) or no tracing is active (N).

Authority Required

This command requires **display** authority. The description of the $T RDRnn command explains how to ensure the proper MVS system command group authority is assigned.

This command requires **read** security access authority. For a description of assigning command input authority, see *z/OS JES2 Initialization and Tuning Guide*.

Scope

Single Member. The response to this command will be a display of information about this member only. You might want to use this command to get information about all members in the MAS. To do so, you can use the MVS ROUTE *ALL command to issue this command to all active members (if the JES2 command character is the same on all members). See *z/OS MVS System Commands* for more information on using the ROUTE *ALL command.

Messages

The $HASP648 message displays requested information about the SSI function.

Example

```
1  $d ssi(*)

  $HASP648 SSI(1)    ADDRESS=02FDC458,DESC=(PROCESS SYSOUT),
  $HASP648           MODULE=HASCSIRQ,TRACE=NO

  $HASP648 SSI(2)    ADDRESS=02FDC970,DESC=(JOB CANCEL),
  $HASP648           MODULE=HASCSIRQ,TRACE=NO

  $HASP648 SSI(3)    ADDRESS=02FDCC00,DESC=(JOB STATUS),
  $HASP648           MODULE=HASCSIRQ,TRACE=NO
⋮
```

This example displays the characteristics of all SSI functions that have been defined; this example shows only a portion of the complete output.

$D SUBTDEF - Display Subtask Definitions

Function

To display the JES2 subtask definitions.

Syntax

```
►►──$D──SUBTDEF──┬──────────┬──────────────────────────────────────────►◄
                 └─,GSUBNUM─┘
```

Parameters

GSUBNUM
Defines the maximum number (1-50) general purpose subtasks available.

Authority Required

This command requires **display** authority.

This command requires **read** security access authority. For a description of assigning command input authority, see *z/OS JES2 Initialization and Tuning Guide*.

Scope

The scope of this command varies by parameter.

Some parameters on this command will display information about the entire MAS, while other parameters will display information about this member only.

You might want to use the parameters for this command to get information about all members of the MAS. If so, you can use the MVS ROUTE *ALL command to issue this command to all active members (if the JES2 command character is the same on all members). See *z/OS MVS System Commands* for more information on using the ROUTE *ALL command.

Messages

The $HASP817 message displays the current values of all the parameters on the SUBTDEF statement.

Example

```
1  $D SUBTDEF
  $d subtdef
  $HASP817 SUBTDEF  GSUBNUM=10
```

JES2 displays all current subtask definitions.

$D SUBNET - Display Subnet Connections

Function

To display subnet connections that are defined to JES2. This command allows the display of subnets defined by the keyword SUBNET on the NODE initialization statement.

Note: You can redirect these displays to a networking console.

One or more parameters on this command accepts wildcards. Parameter descriptions will note that.

Syntax

```
►►──$D──SUBNET──┬──────────────
```

$D SUBNET

JES2 displays all the nodes on the POK subnet.

$D TPDEF - Display Current Teleprocessing Characteristics

Function

To display the current teleprocessing characteristics.

Syntax

```
►►──$D──TPDEF──┬──────────────┬──┬──────────┬──┬──────────────────────────────┬──►
               └─,AUTOINTV────┘  └─,AUTONUM─┘  └─,BSCBUF──┬──────────────────┬─┘
                                                          │   ┌──────────────┐ │
                                                          │   ▼              │ │
                                                          └─=(──┬─FREE───┬──)─┘
                                                                ├─LIMIT──┤
                                                                ├─SIZE───┤
                                                                └─WARN───┘

►──┬──────────────────────────┬──┬──────────┬──┬──────────┬──┬──────────┬──►
   └─,SNABUF──┬──────────────┬──┘  └─,MBUFSIZE─┘  └─,RMTMSG─┘  └─,RMTNUM─┘
              │   ┌──────────┐ │
              │   ▼          │ │
              └─=(──┬─FREE───┬──)─┘
                    ├─LIMIT──┤
                    ├─SIZE───┤
                    └─WARN───┘

►──┬──────────────────────────┬──────────────────────────────────────────────►◄
   └─,SESSIONS──┬──────────────┬─┘
                │   ┌──────────┐ │
                │   ▼          │ │
                └─=(──┬─FREE───┬──)─┘
                      ├─FROZEN─┤
                      ├─LIMIT──┤
                      └─WARN───┘
```

Parameters

TPDEF
The $HASP839 message displays the current JES2 teleprocessing characteristics.

AUTOINTV
Specifies the autologon timer interval (10-600 seconds) (the time between JES2 automatic logon attempts) for this installation.

AUTONUM
The current number of RJE devices which can specify AUTOLOG=YES.

BSCBUF[=FREE|LIMIT|SIZE|WARN]
Specifies information about the BSC teleprocessing buffers JES2 allocates below 16 megabytes in virtual storage.

FREE
The current number of free TP buffers below the 16M line.

LIMIT
Specifies the maximum number (10-9999) of teleprocessing buffers JES2 allocates below 16 megabytes in virtual storage.

SIZE
Specifies the size (520-32512) in bytes of the teleprocessing buffers JES2 allocates below 16 megabytes in virtual storage.

WARN
Specifies the threshold percentage (0-100) of the maximum use of teleprocessing buffers below 16 megabytes in virtual storage.

SNABUF[=FREE|LIMIT|SIZE|WARN]
Specifies information about the SNA teleprocessing buffers JES2 allocates above 16 megabytes in virtual storage.

FREE
The current number of free TP buffers above the 16M line.

LIMIT
Specifies the maximum number (10-9999) of teleprocessing buffers JES2 allocates above 16 megabytes in virtual storage.

SIZE
Specifies the size (520-3960) in bytes of the teleprocessing buffers JES2 allocates above 16 megabytes in virtual storage.

WARN
Specifies the threshold percentage (0-100) of the maximum use of teleprocessing buffers above 16 megabytes in virtual storage.

MBUFSIZE
Specifies the size (128-3960) in bytes (dependent upon JES2 macro expansions) of each JES2 multileaving buffer.

RMTMSG
Specifies the maximum number (1-255) of messages that may be queued by RTAM to a multileaving remote console.

RMTNUM
Specifies the highest number (0-32767) that can be defined for an RJE workstation on this member.

SESSIONS[=FREE|FROZEN|LIMIT|WARN]
Specifies information about the maximum number of VTAM sessions.

FREE
The current number of VTAM sessions available to JES2 which are not in use.

FROZEN
The current number of VTAM sessions which have been “frozen” due to an error on the session.

LIMIT
Specifies the maximum number (1-9999) of VTAM sessions (nnn) that can be active at one time.

WARN
Specifies a threshold percentage (0-100) of the maximum used number of VTAM sessions at which JES2 issues the $HASP050 to warn the operator of a resource shortage.

Authority Required

This command requires **display** authority. The description of the $T RDRnn command explains how to ensure the proper MVS system command group authority is assigned.

This command requires **read** security access authority. For a description of assigning command input authority, see *z/OS JES2 Initialization and Tuning Guide*.

Scope

The scope of some commands varies by parameter.

Some parameters on certain commands will display information about the entire MAS, while other parameters will display information about this member only.

For those commands that are single member scope, or have some parameters that are single member scope, you might want to use the parameters for that command to get information about all members of the MAS. If so, you can use the MVS ROUTE *ALL command to issue that command to all active members (if the JES2 command character is the same on all members). See *z/OS MVS System Commands* for more information on using the ROUTE *ALL command.

Messages

The $HASP839 message is issued in response to this command.

Example

1 `$d tpdef`

```
$HASP839 TPDEF AUTOINTV=32,AUTONUM=3,BSCBUF=(LIMIT=48,
$HASP839       WARN=80,FREE=48,SIZE=520),MBUFSIZE=400,
$HASP839       RMTMSG=200,TMTNUM=32767,SESSIONS=(LIMIT=102,
$HASP839       WARN=80,FREE=102,FROZEN=0),SNABUF=(LIMIT=30,
$HASP839       WARN=80,FREE=30,SIZE=400)
```

The $HASP839 message shows JES2 teleprocessing characteristics.

$D TRace(nnn) - Display Current Status of Trace IDs

Function

To display the current status of JES2 trace ids.

Syntax

```
►►──$D──TRace──┬─nnn──┬──────┬──────────────────────────────┬──┬──────────────────────────────────────────►
               │      └─-─┬─nnn─┬─┘                            │  │ Selection limiting keywords │
               │          └─*───┘                              │  └─────────────────────────────┘
               │      ┌──────────────────────────────┐        │
               │      ▼                              │        │
               └──(───┬─nnn─┬──┬──────┬──────────────┬──)─────┘
                      └─*───┘  └─-─┬─nnn─┬─┘
                                   └─*───┘

►──┬──────────────────────────────┬──────────────────────────────────────────────────────────────────►◄
   │ Display limiting keywords │
   └──────────────────────────────┘
```

Display limiting keywords:

```
├──┬──────────┬──────────────────────────────────────────────────────────────────────────────────────┤
   └─,START───┘
```

Selection limiting keywords:

```
├──┬──────────────────────────────────────────────────────────────────────────────────────────────────┤
   └─,──┬───┬──START──┬──────┬──┬────┬──┬────┬──┘
        └─/─┘         └─=────┘  └─No─┘  └─Yes┘
           └─^=─┘
```

Parameters

TRace(nnn)
The $HASP667 message displays the current status of the specified trace ID(s).

START={No|Yes}
Specifies whether (Yes) or not (No) a specific trace ID or a range of IDs is activated.

Authority Required

This command requires **display** authority. The description of the $T RDRnn command explains how to ensure the proper MVS system command group authority is assigned.

This command requires **read** security access authority. For a description of assigning command input authority, see *z/OS JES2 Initialization and Tuning Guide*.

Scope

The scope of some commands varies by parameter.

Some parameters on certain commands will display information about the entire MAS, while other parameters will display information about this member only.

For those commands that are single member scope, or have some parameters that are single member scope, you might want to use the parameters for that command to get information about all members of the MAS. If so, you can use the MVS ROUTE *ALL command to issue that command to all active members (if the JES2 command character is the same on all members). See *z/OS MVS System Commands* for more information on using the ROUTE *ALL command.

Messages

The individual parameter descriptions list the resulting messages.

Example

1 `$D TRACE`

```
$d trace(4)
$HASP667 TRACE(4)     START=NO
```

The $HASP667 message shows JES2 trace id status.

$D TRACEDEF - Display Current Trace Environment Characteristics

Function

To display the current JES2 trace environment characteristics.

Syntax

```
►►──$D──TRACEDEF──┬──────────┬──┬──────────────────────────────┬──┬─────────┬──────────────────────────────►
                  └,ACTIVE───┘  └,LOG──┬──────────────────────┬─┘  └,PAGES──┘
                                       │      ┌──────────┐    │
                                       │      ▼          │    │
                                       └─=(────┬─CLASS──┬──)──┘
                                               ├─SIZE───┤
                                               └─START──┘

►──┬──────────────────────────────┬──┬─────────┬──┬──────────┬──┬──────────┬──────────────────────────────►◄
   └,STATS──┬──────────────────────┬─┘  └,TABFREE─┘  └,TABLES─┘  └,TABWARN─┘
            │      ┌──────────┐    │
            │      ▼          │    │
            └─=(────┬─DISCARDS──┬──)──┘
                    ├─IDS──────┤
                    └─TOTDISC──┘
```

Parameters

TRACEDEF
The $HASP698 message displays the current JES2 TRACE environment characteristics. If you specify the STATS parameter, the message also displays statistics about the tracing facility.

ACTIVE
Specifies whether (Yes) or not(No) the TRACE facility is started.

LOG[=CLASS|SIZE|START]
Specifies the trace table logging environment.

CLASS
Specifies the output class (A-Z, 0-9) of the trace log data set.

SIZE
Specifies the maximum size (100-2147483647) (in bytes) that the trace log data set may attain before it is queued for printing.

START
Specifies whether (Yes) or not (No) the trace log information is formatted and periodically added to the trace log data set.

PAGES
Specifies the number (9-1250) of 4K-pages available to each trace table.

STATS[=DISCARDS|IDS|TOTDISC]
DISCARDS
Discards since last successful trace.
IDS
The active trace IDs.
TOTDISC
Total discards since tracing was started.

TABFREE
The number of unused trace tables.

TABLES
Specifies the number (0-2500) of trace tables that JES2 creates at initialization.

TABWARN
Specifies the percentage (0-100) of trace table use at which the operator will be alerted.

Authority Required

This command requires **display** authority. The description of the $T RDRnn command explains how to ensure the proper MVS system command group authority is assigned.

This command requires **read** security access authority. For a description of assigning command input authority, see *z/OS JES2 Initialization and Tuning Guide*.

Scope

Single Member. The response to this command will be a display of information about this member only. You might want to use this command to get information about all members in the MAS. To do so, you can use the MVS ROUTE *ALL command to issue this command to all active members (if the JES2 command character is the same on all members). See *z/OS MVS System Commands* for more information on using the ROUTE *ALL command.

Messages

The individual parameter descriptions list the resulting messages.

Example

1 `$D TRACEDEF`

```
$d tracedef
$HASP698 TRACEDEF
$HASP698 TRACEDEF  ACTIVE=NO,TABLES=3,PAGES=9,TABWARN=80,
$HASP698           TABFREE=3,LOG=(CLASS=A,START=NO,SIZE=500),
$HASP698           STATS=(TOTDISC=0,DISCARDS=0,IDS=(NONE))
```

The $HASP698 message shows JES2 trace characteristics.

$D U - Display the Status of JES2-Controlled Devices

Function

- To display the status of the specified devices.
- To display detailed information about the specified devices, including the identification of any jobs currently active on the device.
- To determine the tracing status of the processors associated with individual devices (such as, RDRnn, PRTnnnn, PUNnn, etc.) that allow TR=Y to be set.
- To determine how devices are notified of printer intervention conditions.

Syntax

```
                  ┌─,─────────────────┐
                  ▼                   │
►►──$D──U──┬──────────────────────┬──┬──────────────────────┬──────────────────────────────────────►◄
           ├─,ALL─────────────────┤  ├─,ACTIVE──────────────┤
           ├─,LINEn───────────────┤  ├─,ACT─────────────────┤
           ├─,LNEn────────────────┤  ├─,LONG────────────────┤
           ├─,LNES────────────────┤  ├─,SHORT───────────────┤
           ├─,LOGONn──────────────┤  ├─,SH──────────────────┤
           ├─,LGNn────────────────┤  ├─,STARTED─────────────┤
           ├─,LGNS────────────────┤  └─,STAR────────────────┘
           ├─,OFFS────────────────┤
           ├─,PRTS────────────────┤
           ├─,PUNS────────────────┤
           ├─,RMT─────────────────┤
           ├─,RMTS────────────────┤
           ├─,RMTn(-n|-*)─────────┤
           ├─,RDRS────────────────┤
           ├─,TP──────────────────┤
           └─,device──────────────┘
```

Parameters

U If you do not specify any device operands, JES2 displays the status of all local JES2-controlled devices.

ALL
JES2 displays the status of all local JES2-controlled devices and active remote devices. To display the status of internal readers, use the $D RDI command.

LINEn|LNEn
JES2 displays detailed information about the line and any remote devices or NJE nodes connected to the specified line.

LNES
JES2 displays the status of all lines and any connected remote devices or NJE nodes.

LOGONn|LGNn
JES2 displays detailed information about the specified JES2/VTAM interface. If a SNA session is established, JES2 also displays detailed information about the SNA remote terminal.

LGNS
JES2 displays the status of all JES2/VTAM interfaces.

OFFS
JES2 displays the status of all defined offload devices and their associated transmitters and receivers.

PRTS
JES2 displays the status of all local printers.

PUNS
JES2 displays the status of all local punches.

RMT
JES2 displays the information for the remote from which the command is entered. For example, if the operator at the remote workstation, RMT34, enters $D U,RMT, JES2 responds with the information for remote 34 at the console attached to RMT34. This parameter can only be used from a console attached to a remote workstation.

RMTS
JES2 displays the status of all remote terminals, associated remote devices, and any lines to which a remote terminal is connected.

RMTn[-n|-*]
JES2 displays detailed information about the specified remote terminal or range of terminals, associated remote devices, and any lines to which they are connected.

Note that *n-** can be used to specify a range up to the highest-numbered RJE workstation attached to a JES2 member.

RDRS
JES2 displays the status of all local readers.

TP
JES2 displays the status of all lines and the JES2/VTAM interface.

device
JES2 displays detailed information about the specified devices. You can specify any of the following devices:

Device	Definition
OFFLOADn	A spool offload device
OFFn.JT	A job transmitter associated with offload device n
OFFn.JR	A job receiver associated with offload device n
OFFn.ST	A SYSOUT transmitter associated with offload device n
OFFn.SR	A SYSOUT receiver associated with offload device n
PUNnn	A local punch
PRTnnnn	A local printer
RDRnn	A local reader
Rnnnn.PRm	A printer connected to remote terminal n
Rnnnn.PUm	A punch connected to remote terminal n
Rnnnn.RDm	A reader connected to remote terminal n
Ln.STn	A SYSOUT transmitter logically connected to NJE line n
Ln.SRn	A SYSOUT receiver logically connected to NJE line n
Ln.JTn	A job transmitter logically connected to NJE line n
Ln.JRn	A job receiver logically connected to NJE line n

Notes:

1. When you specify PRn, PUn, and RDn from a remote console, JES2 displays detailed information for the specified devices connected to that remote system.
2. If you specify OFFLOADn, JES2 also displays detailed information for the associated transmitters and receivers.
3. The NPRO parameter displayed for cut sheet page printers (for example, the 3820) has no effect on these printers.

4. The number of lines displayed for a job on an active printer are only as accurate as the last valid checkpoint.
5. For the 3800 printer, the job name that is displayed is the name of the job that is currently visible at the transfer station.

The following operands modify the default amount of information displayed. For example, if you want to display detailed information for all readers (a limited status display is the default), specify $DU,RDRS,LONG. If you want to limit this display for only those readers that are active, specify $DU,RDRS,LONG,ACTIVE.

Although it is not invalid to specify all four modifiers, SHORT overrides LONG and ACTIVE overrides STARTED when specified together. In addition, the SHORT or LONG modifier may produce the same display as the default, depending on the device operand specified. The individual descriptions below explain the modifier's effects when used with specific device operands.

ACTIVE|ACT
JES2 displays the requested information only for devices that are connected to the function subsystem application level control block (FSA), and that are currently performing work or have lines currently dedicated for remote device configuration.

LONG
If you specify LONG for a group of devices (for example, RMTS), JES2 displays detailed information for all the major devices and any associated sub-devices (for example, Rnnnn.PRn). The exceptions to this rule are:

1. $DU,LONG, $DU,ALL,LONG and $DU,TP,LONG do not produce displays for any associated sub-devices (for example, OFFn.JT or Rnnnn.RDm).
2. $DU,LGNS,LONG does not produce a display for any SNA remote terminals connected to the interfaces.

If you specify LONG for a single device (for example, LINE2), JES produces the default display of detailed information for the major device and any associated sub-devices (for example, Rnnnn.RDm).

SHORT|SH
If you specify SHORT for a group of devices (for example, RMTS), JES2 displays the status of only the major devices. No sub-devices (for example, Rnnnn.PRm) are displayed.

Note: Specifying SHORT for $DU, $DU,ALL, $DU,TP, or $DU,LGNS produces the same display as the default.

If you specify SHORT for a single device (for example, LINE4), JES2 displays only the status of the major device and any associated sub-devices (for example, Rnnnn.PRm).

STARTED|STAR
JES2 displays information only for started devices or lines (as specified by the device operands).

Note: This modifier operand is not valid for started offload transmitters and receivers unless the offload device is also started. JES2 issues the $HASP003 message indicating that the specified device could not be found.

Authority Required

This command requires **display** authority. The description of the $T RDRnn command explains how to ensure the proper MVS system command group authority is assigned.

This command requires **read** security access authority. For a description of assigning command input authority, see *z/OS JES2 Initialization and Tuning Guide*.

Scope

Single Member. The response to this command will be a display of information about this member only. You might want to use this command to get information about all members in the MAS. To do so, you can use the MVS ROUTE *ALL command to issue this command to all active members (if the JES2 command character is the same on all members). See *z/OS MVS System Commands* for more information on using the ROUTE *ALL command.

Messages

Table 50. $D U Messages

Device	Resulting Message
LINEn	$HASP880
LOGONn	$HASP881
RMTnnnn	$HASP879
OFFLOADn	$HASP882
OFFn.JR	$HASP883
OFFn.JT	$HASP884
OFFn.SR	$HASP885
OFFn.ST	$HASP886
other devices	$HASP603

Examples

1 `$d u,line15`

```
$HASP880 LINE15    UNIT=SNA,STATUS=DRAINED,COMPRESS=YES,LOG=NO,
                   PASSWORD=(NOTSET),REST=0,SESSIONS=,
                   TRACEIO=NO,JRNUM=3,JTNUM=3,SRNUM=4,STNUM=2
          L15.JR1  UNIT=SNA,STATUS=DRAINED,HOLD=NO
          L15.JR2  UNIT=SNA,STATUS=DRAINED,HOLD=NO
          L15.JR3  UNIT=SNA,STATUS=DRAINED,HOLD=NO
          L15.JT1  UNIT=SNA,STATUS=DRAINED
          L15.JT2  UNIT=SNA,STATUS=DRAINED
          L15.JT3  UNIT=SNA,STATUS=DRAINED
          L15.SR1  UNIT=SNA,STATUS=DRAINED
          L15.SR2  UNIT=SNA,STATUS=DRAINED
          L15.SR3  UNIT=SNA,STATUS=DRAINED
          L15.SR4  UNIT=SNA,STATUS=DRAINED
          L15.ST1  UNIT=SNA,STATUS=DRAINED,LIMIT=(0,*),PLIM=(0,*),
                   WS=(/)
          L15.ST2  UNIT=SNA,STATUS=DRAINED,LIMIT=(0,100),
                   PLIM=(0,2),WS=(LIM/)
```

JES2 displays detailed information about line 15, including information about job receivers (JRx), job transmitters (JTx), SYSOUT receivers (SRx) and SYSOUT transmitters (STx). The SYSOUT transmitter information includes their work

selection criterion (line and page limits). In this case, SYSOUT transmitter 1 (ST1) has no work selection limits specified for SYSOUT data sets that it selects. ST2 has work selection limits specified and selects SYSOUT data sets with up to 100 lines and up to 2 pages.

2 `$d u,rdrs,l=3`

```
$HASP603 RDR1      UNIT=000C,STATUS=DRAINED
$HASP603 RDR2      UNIT=0011,STATUS=DRAINED
$HASP603 RDR3      UNIT=0012,STATUS=DRAINED
$HASP603 RDR4      UNIT=001A,STATUS=DRAINED
```

JES2 displays the status of all local readers on console 3.

3 `$du,prts,long,started`

```
$HASP603 PRT1      UNIT=0017,STATUS=HALTED,(STC00003 IRRDPTAB),
$HASP603           BURST=NO,CHAR(1)=GT10,CKPTLINE=0,
$HASP603           CKPTMODE=PAGE,CKPTPAGE=100,CKPTSEC=0,
$HASP603           CREATOR=,DEVFCB=,FCB=STD3,FORMS=(STD,,,,,,,),
$HASP603           FSS=BLUEBERY,JOBNAME=IRRDPTAB,LASTFORM=STD,
$HASP603           LIMIT=(0,*),COPYMARK=DATASET,MARK=NO,
$HASP603           MODE=JES,NEWPAGE=DEFAULT,NPRO=300,PAUSE=NO,
$HASP603           PLIM=(0,*),PRESELCT=YES,PRMODE=(LINE),
$HASP603           QUEUE=A,RANGE=(J1,32767),ROUTECDE=(LOCAL),
$HASP603           SEP=YES,SEPCHARS=DEFAULT,SEPDS=NO,SETUP=HALT,
$HASP603           SPACE=,TRACE=NO,TRANS=DEFAULT,TRKCELL=NO,
$HASP603           UCS=GT10,UCSVERFY=NO,VOLUME=(,,,),WRITER=,
$HASP603           WS=(W,Q,R,PRM,LIM/F,UCS,FCB)
```

JES2 displays detailed information about all local printers that have been started.

4 `$d u,offload1,offload2,offload3,short,active`

```
$HASP882 OFFLOAD2 DSN=SY1.DMP1.WORK,STATUS=ACTIVE
$HASP884 OFF2.JT STATUS=ACTIVE,(JOB00002 MYJOB)
$HASP886 OFF2.ST STATUS=INACTIVE
$HASP883 OFF2.JR STATUS=DRAINED
$HASP886 OFF2.SR STATUS=DRAINED
```

JES2 displays the status of offload devices 1, 2, and 3 and their associated transmitters and receivers, if the offload devices are currently active. In this case, offload device 2 is the only specified offload device that is currently performing work. Its associated offload job transmitter is in the process of transmitting job 2 (named MYJOB) to the offload data set.

5 `$du,prt2`

```
$HASP603 PRT2      UNIT=0002,STATUS=DRAINED,CKPTLINE=0,
$HASP603           CKPTMODE=PAGE,CKPTPAGE=100,CREATOR=,DEVFCB=,
$HASP603           FCB=6,FORMS=(HFAMFORM,,,,,,,),FSS=BLUEBERY,
$HASP603           JOBNAME=,LASTFORM=HFAMFORM,LIMIT=(0,*),
$HASP603           MODE=JES,NEWPAGE=DEFAULT,NPRO=300,PAUSE=NO,
$HASP603           PLIM=(0,*),PRMODE=(LINE),
$HASP603           QUEUE=1A2B3C4D5E6F7G8,RANGE=(J1,32767),
$HASP603           ROUTECDE=(LOCAL),SEP=YES,SEPCHARS=DEFAULT,
$HASP603           SEPDS=NO,SETUP=HALT,SPACE=,TRACE=NO,
$HASP603           TRANS=DEFAULT,TRKCELL=NO,UCS=0,UCSVERFY=NO,
$HASP603           VOLUME=(,,,),WRITER=,
$HASP603           WS=(W,Q,R,PRM,LIM/F,UCS,FCB)
```

JES2 displays detailed information about local printer 2, which has been started.

$DEL CONNect - Delete Network Connections

Function

This command allows you to delete static connections, that is, connections defined by CONNECT initialization statements and $ADD commands. You cannot delete connections defined by the network path manager.

Syntax

```
►►──$DEL──CONNect──┬──────────────────────────────────────────────────────────────────────────────────►
                   │,──┬──────┬──MA──────────────┬──────────────────────────────────────────────────────
                   │   │ /    │                  │
                   │   ├──────┤──MEMBA───────────┤
                   │   │ /    │                  │
                   │   ├──────┤──MEMBERA─────────┤
                   │   │ /    │                  │
                   │   └──────┘                  │
                   │                             │
                   │                             │
                   │                             
```

Scope

Single Member. The values supplied for this command will be in effect for this member only.

Depending on your installation's setup, however, you might want this command to be applied to all members of the MAS (to ensure a consistent environment across the MAS). If so, you can use the MVS ROUTE *ALL command to issue this command to all active members (if the JES2 command character is the same on all members). See *z/OS MVS System Commands* for more information on using the ROUTE *ALL command.

Messages

The $HASP815 message is issued in response to this command.

Example

```
1  $DEL CONNECT,NODEA=PHOENIX,MEMBA=1,NODEB=TUCSON,
MEMBB=1
```

This example deletes an old connection between member 1 at Tucson and member 1 at Phoenix.

$DEL DEStid - Delete a Symbolic Destination

Function

To delete a symbolic name for a JES2 route code.

Syntax

```
►►──$DEL──DEStid──┬─'xxxxxxxx'──────────────────┬──────────────────────────────────────►◄
                  │   ┌──────────┐              │
                  │   ▼          │              │
                  └─(──┬─xxxxxxxx─┬──)──┘       └─,DEST=dest─┘
                       └─'xxxxxxxx'─┘
```

Parameters

xxxxxxxx
Specifies the 1 to 8 alphanumeric or special ($, #, or @) character symbolic destination name affected by this statement.

DEST=dest
Specifies a route code JES2 can use to route data.

Authority Required

This command requires **system** authority. The description of the $T RDRnn command explains how to ensure the proper MVS system command group authority is assigned.

This command requires **control** security access authority. For a description of assigning command input authority, see *z/OS JES2 Initialization and Tuning Guide*.

Processing Considerations

When you dynamically delete a JES2 symbolic destination (destid), JES2 honors the deletion across a restart only if you perform a hot start. To permanently delete the symbolic destination, remove the DEStid initialization statement before restarting JES2.

Scope

Single Member. The values supplied for this command will be in effect for this member only.

Depending on your installation's setup, however, you might want this command to be applied to all members of the MAS (to ensure a consistent environment across the MAS). If so, you can use the MVS ROUTE *ALL command to issue this command to all active members (if the JES2 command character is the same on all members). See *z/OS MVS System Commands* for more information on using the ROUTE *ALL command.

Messages

The $HASP822 message indicates that the specified DESTID has been deleted.

Example

```
1  $del destid(wrk1)

 $HASP822 DESTID(WRK1)      DEST=U34-ELEMENT DELETED
```

JES2 deletes the destination identifier WRK1.

$DEL PROCLIB(xxxxxxxx) - Delete a Dynamic PROCLIB Concatenation

Function

The $DEL PROCLIB(xxxxxxxx) command removes a dynamic PROCLIB concatenation. $DEL PROCLIB(xxxxxxxx) only affects dynamic PROCLIBs and cannot be used to delete PROCLIBs defined in the JES2 start PROC. If the dynamic PROCLIB overrode a PROCxx DDs in the JES2 start PROC, deleting the dynamic PROCLIB will cause the PROCLIB in the JES2 start PROC to be used.

Syntax

```
►►──$DEL──PROClib─┤ Subscripts for PROCLIB ├──┬──────────────────────────────────────►◄
                                              │ ┌──────────────────────┐
                                              └─┤ Selection fragment ├─┘
```

Subscripts for PROCLIB

```
├──┬─'proclib'──────────────────────────────────────────────────────────────────────┤
   │   ┌──────────────────────────────────────────────────────────────────────────┐
   │   ↓                                                                          │
   └─(──┬─proclib──────────┬──┬──────────────────────────────────────────────────)─┘
        ├─'proclib'────────┤  ├─-proclib──────────────────────────────────────────┤
        └─*────────────────┘  ├─-'proclib'─────────────────────────────────────────┤
                              └─-*─────────────────────────────────────────────────┘
```

Selection fragment

```
├──┤ Selection limiting keywords ├──────────────────────────────────────────────────┤
```

Selection limiting keywords:

```
├──┬──────────────────────────────────────────────────────────────────────────────┤
   │   ┌──────────────────────────────────────────────────────────────────────────┐
   │   ↓                                                                          │
   └─,──┬──┬─DD─┤ Subscripts for DD ├─=(──┬─/──DSName─┤ Delimiters for DSNAME ├─dsname──┬──)─┘
        └─/──┘                          ├─/──UNIT──┬──┬─=──┬─unit──────────────────────┤
                                        │          │  ├─¬=─┤                           │
                                        │          │  ├─>──┤                           │
                                        │          │  └─<──┘                           │
                                        └─/──VOLser─┬──┬─=──┬─volser────────────────────┘
                                                    │  ├─¬=─┤
                                                    │  ├─>──┤
                                                    │  └─<──┘
```

Subscripts for DD

```
├──┬─nn──┬──┬──────────────────────────────────────────────────────────────────────┤
   │     │  │  ┌──────────────────────────────────────────────────────────────────┐
   │     │  │  ↓                                                                  │
   │     │  └─-──┬─mm─┬──┬──────────────────────────────────────────────────────)─┘
   │     │       └─*──┘  │
   │     └───────────────┘
   └─(──┬─nn─┬──┬─-──┬─mm─┬──┬──────────────────────────────────────────────────)─┤
        └─*──┘  │    └─*──┘  │
                └────────────┘
```

$DEL PROCLIB(xxxxxxxx)

Delimiters for DSNAME

```
├─┬─ = ─┬──────────────────────────────────────────────────────────────┤
  ├─ ¬= ─┤
  ├─ > ──┤
  └─ < ──┘
```

Parameters

(xxxxxxxx)
Specifies the 1-8 character PROCLIB DD name being displayed. You can also specify wildcards on this parameter. See “Using Wildcards” on page 93 for additional information.

DD(nnn)=
Can be used to select which PROCLIB concatenation to display.

DSName=jxxx,,,x
Specifies a 1-44 character data set name which is in a PROCLIB concatenation. You can also specify wildcards on this parameter. See “Using Wildcards” on page 93 for additional information.

UNIT=hhhh|/hhhh|nnnn|cccccccc
If the PROCLIB data set to be used is not cataloged, then the unit information for the device containing the data set must be specified in one of the following ways:

hhhh | /hhhh
Specifies unit information for the PROCLIB concatenation to be deleted. The data set must be specified in one of the following ways:

- UNIT=hhh
- UNIT=/hhh
- UNIT=/hhhh

where hhh and hhhh represent the device numbers. A slash (/) must precede a 4 digit device number.

nnnn
Specifies a device name.

cccccccc
Specifies a 1 to 8 character group name assigned to the device or group of devices.

VOLser=xxxxxx
Specifies a 1 to 6 character volume serial number for the PROCLIBs to be deleted.

Authority Required

This command requires **system** authority. The description of the $T RDRnn command explains how to ensure the proper MVS system command group authority is assigned.

This command requires **control** security access authority. For a description of assigning command input authority, see *z/OS JES2 Initialization and Tuning Guide*.

Processing Considerations

A $DEL PROCLIB command cannot delete PROCLIB concatenation specified in the JES2 start PROC.

Deleting a dynamic PROCLIB that has the same name as a PROCLIB DD in the JES2 start PROC causes JES2 to revert to using the PROCLIB DD in the JES2 start PROC.

Scope

Single Member. The values supplied for this command will be in effect for this member only.

You may want to use this command to get information about all members in the MAS. To do so, you can use the MVS ROUTE *ALL command to issue this command to all active members (if the JES2 command character is the same on all members). See *z/OS MVS System Commands* for more information on using the ROUTE *ALL command.

Messages

The HASP319 message displays the current PROCLIB concatenation.

The HASP003 RC=52 indicates that you are trying to delete a PROCLIB concatenation that does not exist.

Example

1

```
$del proclib(proc01)
$HASP319 PROCLIB(PROC01)
$HASP319 PROCLIB(PROC01)    DD(1)=(DSNAME=SYS1.PROCLIB),
$HASP319                    DD(2)=(DSNAME=TEST.PROCLIB) -
$HASP319                    ELEMENT DELETED
```

Delete dynamic PROCLIB PROC01

2

```
$del proclib(*),DD(*)=(/DSN=SYS1.PROCLIB)
$HASP319 PROCLIB(PROC02)
$HASP319 PROCLIB(PROC02)    DD(1)=(DSNAME=SYS1.PROCLIB) -
$HASP319                    ELEMENT DELETED
```

Delete all dynamic PROCLIB concatenation that refer to SYS1.PROCLIB

$E CKPTLOCK, HELDBY - Reset the Checkpoint Lock

Function

To reset the checkpoint lock when a member fails holding the lock and normal processing to release the lock has failed. The member holding the lock is identified in the $HASP264 message. If the lock is not released, other members in the multi-access spool (MAS) configuration are unable to access the checkpoint data set.

This command should only be issued if normal processing has failed to release the lock and only after verifying the state of the member identified as holding the checkpoint lock. When a member fails, processing in JES2 (if the checkpoint lock is on DASD) or processing in MVS (if the checkpoint is in a coupling facility structure) will clear the lock. This code depends on the status of the JES2 address space which holds the lock.

Before using this command to reset the checkpoint lock, you need to ensure that the JES2 member that holds the lock is no longer active. If MVS (specifically, XCF and JESXCF) still considers the member active, then that is why normal processing has not released the lock. To determine if MVS considers the JES2 member active, issue the following command:

```
D XCF,GROUP,group,node$member
```

where group is the JES2 XCF group name from a $DMASDEF,XCFGRPNM, node is the JES2 node name from a $D NJEDEF,OWNNAME, and member is the name of the member that holds the lock. Typically, the XCF group name and the JES2 node name are the same. For example if the member is IBM1 and the XCF group name and the JES2 node name are POK the command would be

```
D XCF,GROUP,POK,POK$IBM1
```

Based on the status in the resulting IXC333I response, you can determine the appropriateness of this command. If the status is FAILED or the member is not defined to the group (IXC326I response), then it is safe to issue the $E CKPTLOCK command. If the response is ACTIVE, then further investigation is needed. If it is any state other than ACTIVE or FAILED, then resolving that condition will result in JES2 resuming normal processing. In this case, the $E CKPTLOCK should not be used.

If the state is in the IXC333I message is ACTIVE, then you must determine if the JES2 address space still exists. Issue the command

```
ROUTE system,D A,JES2
```

where system is the SYSTEM name from the IXC333I message. Note: If the name of your JES2 subsystem is not JES2, use the actual subsystem name in the ROUTE command. If the IEE115I response indicates JES2 NOT FOUND, then it is safe to issue the $E CKPTLOCK command. Otherwise, JES2 is still active and issuing the $E CKPTLOCK command could result in JES2 work queue damage.

Caution: Use of this command when the failing JES2 address space still exists may cause a system outage. Never automate this command. Do not issue this command unless directed to by an IBM service representative.

Syntax

```
►►──$E──CKPTLOCK──┬──────────────────────────────┬──────────────────────────────────►◄
                  └─,HELDBY=──┬─memname──────────┬┘
                              ├─INITIALIZATION───┤
                              └─INITI────────────┘
```

Parameters

CKPTLOCK
The member to which the entering console is attached attempts to reset the checkpoint lock.

HELDBY={memname|INITIALIZATION|INITI}
Specifies the member that has failed while holding the checkpoint lock.

memname
Specifies the 1 to 8 alphanumeric or special ($, #, or @) character name of the failed member that is holding the checkpoint lock.

INITIALIZATION|INITI
The member failed during initialization before a member name was assigned to it (the $HASP264 message indicates this condition).

Authority Required

This command requires **system** authority. The description of the $T RDRnn command explains how to ensure the proper MVS system command group authority is assigned.

This command requires **control** security access authority. For a description of assigning command input authority, see *z/OS JES2 Initialization and Tuning Guide*.

Processing Considerations

- The lock reset should be automatic and you shouldn't have to issue this command. Make sure it's appropriate to use this command as described above.
- Issue this command from only one member in the multi-access spool configuration.
- If the checkpoint lock is not held by the member specified by memname, JES2 does not reset the lock, but reissues the $HASP264 message. This happens only if you specified an incorrect memname or JES2 previously reset the lock.
- If you do not plan to restart the failed member immediately, consider using the $EMEMBER(member) command to warm start it if your MASDEF specifications do not already automatically perform this function.

Note: To determine your installation's processing environment, consult your system programmer.

Scope

Single Member. The values supplied for this command will be in effect for this member only.

Messages

The $HASP000 message indicates the command was accepted.

Example

```
1  $e ckptlock,heldby=sysa

  $HASP000 OK
```

JES2 resets the checkpoint lock that is held by the failed member identified by SYSA.

$E Job - Restart a Job

Function

To restart a job.

Syntax

```
►►─$E──┬─Job──┬─┬──────────────────────────────────────────────────────────►
       ├─JOBQ─┤ │ ├─nn──┬──────────┬──────────────────────────────────────┤
       ├─JQ───┤ │ │     └─-──┬─mm─┬─┘                                      │
       ├─Stc──┤ │ │          └─*──┘                                        │
       └─Tsu──┘ │ ├─'job'──────────────────────────────────────────────────┤
                │ │          ┌──,──────────────────────────────┐           │
                │ └─(────────┴─┬─nn─┬──┬──────────┬──────────┬─┴─────────)─┘
                │              └─*──┘  └─-──┬─mm─┬─┘          │
                │                           └─*──┘            │
                │              ├─job──────────────────────────┤
                │              └─'job'────────────────────────┘
►─┬──────────────────────────────────────────────────────────────────────────
  └─,─┬─────┬─CMDauth──┬──────┬──┬─cmdauth──────────────────────────────────┬
      │ └─/─┘          └─^=────┘  │          ┌──,──────────────────┐         │
      │                           └─(────────┴─┬─cmdauth─┬──────────┴─────)─┘
      │                                        (1)
►─┬──────────────────────────────────────────────────────────────────────────
  └─,─┬─────┬─Hours──┬─>──┬─hours──┬──┬──────┬─┬─Age──┬──┬─>──┬─days──┬──┬──
      │ └─/─┘        └─<────┘        │ └─/─┘ │ └─DAys─┘  └─<────┘       │
      │                              └───────┴─────────────────────────┘
►─┬──────────────────────────────────────────────────────────────────────────
  └─,─┬─────┬─JM──────┬──┬─=────┬─jobmask──┬──┬──────┬─┬─JOBMASK─┬──┬─=────┬
      │ └─/─┘         │  ├─^=───┤           │ └─/─┘ │ └─────────┘  ├─^=───┤
      │               │  ├─>────┤           │       │              ├─>────┤
      │               │  └─<────┘           │       │              └─<────┘
      │               └─JOBMASK─────────────┴───────┴──────────────────────
►─┬──────────────────────────────────────────────────────────────────────────
  └─,─┬─────┬─REBUILD──┬──────┬─┬─No──┬──┬──────────────────────────────────
      │ └─/─┘          └─^=────┘ └─Yes─┘  │
►─┬──────────────────────────────────────────────────────────────────────────
  │                                                                          │
  └─,─┬─┬─────┬─SPL──────┬─=(──┬──────────────────────────────────────────┬─)─┬
      │ │ └─/─┘          │    │ ┌──,──────────────────────────────────┐   │   │
      │ └─SPOOL──────────┘    │ │ ├─┬─────┬─%──────┬──┬─>──┬─percent──┬─┤   │   │
      │   └─/─┘               │ │ │ └─/─┘        │  └─<────┘          │ │   │   │
      │                       │ │ └─Percent──────┘                    │ │   │   │
      │                       │ │   └─/─┘                             │ │   │   │
      │                       │ ├─┬─────┬─Tgs────┬──┬─>──┬─tgs──────┤ │   │   │
      │                       │ │ └─/─┘        │  └─<────┘          │ │   │   │
      │                       │ └─┬─────┬─Volumes┬──┬─=────┬─volume─┬─┴─┘   │   │
      │                       │   └─/─┘        │  └─^=───┘        │       │   │   │
      │                       │                │                  │ ┌──,──┐ │   │   │
      │                       │                │                  └─(─┴─┬─┬─┘   │   │
      │                       │                │                    (2) │ │     │   │
      │                       │                │                        └─volume─┘   │
►─┬──────────────────────────────────────────────────────────────────────────
  └─,─┬─────┬─TYPE──┬──────┬─┬─JOB─┬──┬──────┬─┬─XEQNode──┬──────┬─xeqnode──┬──┬──────┬─┬─Cancel─┬──┬──
      │ └─/─┘       └─^=────┘ ├─STC─┤  │ └─/─┘ │          └─^=────┘          │  │ └─/─┘ │        │  │
      │                      └─TSU─┘  │       │                              │  │       │        │  │
►────────────────────────────────────────────────────────────────────────────◄
```

Notes:

1 *cmdauth* can be coded up to 2 times

2 *volume* can be coded up to 253 times

Parameters

job

Specifies 1 to 8 alphanumeric, special ($, #, or @) or wildcard characters (or a combination of them) that can be used to select a subset of jobs whose job name matches this combination of characters (mask).

'job'
The name of the job that is restarted. This name must appear as coded on the JOB statement and must be enclosed in apostrophes. If more than one job exists with this name, no action is taken.

Job
A batch job or range of batch jobs is to be restarted.

JOBQ|JQ
Specifies *all* jobs, STCs, and TSUs across the MAS for processing.

Stc
A started task or range of started tasks is to be restarted.

Tsu
A time-sharing user or range of time-sharing users is to be restarted.

Age|DAys<days | Age|DAys>days
Specifies the age of affected jobs in days. Only jobs more (with DAYS>nn) or less (with DAYS<nn) than the specified number of days in age are affected, The days are counted from the current hour.

Cancel
Indicates that the job is to be cancelled and held prior to execution. This operand is equivalent to specifying a $H and $C command, in addition to the $E command.

CMDauth=(auth1{,auth2})
Only the jobs that can be affected from the specified remote(s) or node(s) will be restarted. The valid specifications are:

LOCAL|ANYLOCAL
Only the local devices at the local node can affect the output

Nnnnn|nodename
Only local devices at the specified node can affect the output

Rnnnn
Only the specified remote device can affect the output

NnnnnRnnnn|nodename.Rnnnn
Only the specified remote device at the specified remote node can affect the output

destid
A destid corresponding to any of the above remote devices

Note: Specification of the CMDAUTH filter does not override the authority of the console from which the command is issued; both the authority of the console and the specified CMDAUTH filter must match for the job to be affected.

Hours=hours
Specifies the age of affected jobs in hours. Only jobs more (with HOURS>nn) or less (with HOURS<nn) than the specified number of hours in age are affected.

JM|JOBMASK=jobmask
Specifies 1 to 8 alphanumeric, special ($, #, or @) or wildcard characters (or a combination of them) that can be used to select a subset of jobs whose job name matches this combination of characters (mask). For a description of wildcards, see "Using Wildcards" on page 93.

Notes:

1. This is a positional parameter. Specify this following the job_id (JOB, STC, or TSU), or JOBQ parameter.
2. The JOBMASK parameter is not valid with the *'jobname '* parameter.

REBUILD={No|Yes}
Jobs on the rebuild queue are to be restarted (Yes) or not restarted (No).

SPL|SPOOL={Percent|%|Tgs|Volumes}
Only jobs with specific SPOOL characteristics are to be restarted:

Percent|%
Only jobs using more (with %>nn) or less (with %<nn) than the specified percentage of the total available spool space are to be released.

Tgs
Only jobs using more (with Tgs>nn) or less (with Tgs<nn) than the specified number of track groups are to be released.

Volumes=(v1,v2,...)
Only jobs which have allocated spool space on the specified spool volume(s) are to be released.

TYPE={JOB|STC|TSU}
Indicates whether only batch jobs (JOB), started tasks (STC), or time-sharing users (TSU) are to be released.

Authority Required

This command requires **job and system** authority. The description of the $T RDRnn command explains how to ensure the proper MVS system command group authority is assigned.

This command requires **control** security access authority. For a description of assigning command input authority, see *z/OS JES2 Initialization and Tuning Guide*.

Processing Considerations

- If you wish to restart a job, but do not want it to execute at this time, first hold the job using the $H command and then issue the $E command.
- If you wish to cancel the current execution of the job, you should follow the $E command with the $C, MVS CANCEL or MVS REPLY command.
- The $E command does not honor the restart parameter on the /*JOBPARM JECL statement or on the JOBCLASS initialization statement.
- When a job is restarted, all non-spin SYSOUT data sets created during the previous execution are deleted.

Scope

MAS-Wide. This command has an effect across the entire MAS.

Messages

The $HASP890 message indicates the specified job is queued for re-execution.

Examples

1 `$e j2-5`

```
JOB00002  $HASP890 JOB(MYJOB)
$HASP890 JOB(MYJOB)     STATUS=(EXECUTING/IBM1),CLASS=A,
```

```
$HASP890                PRIORITY=9,SYSAFF=(IBM1),HOLD=(NONE)
JOB00003  $HASP890 JOB(MYJOBA)
$HASP890 JOB(MYJOBA)    STATUS=(EXECUTING/IBM1),CLASS=A,
$HASP890                PRIORITY=9,SYSAFF=(ANY),HOLD=(NONE)
JOB00004  $HASP890 JOB(MYJOBB)
$HASP890 JOB(MYJOBB)    STATUS=(EXECUTING/IBM2),CLASS=A,
$HASP890                PRIORITY=9,SYSAFF=(IBM2),HOLD=(NONE)
JOB00005  $HASP890 JOB(MYJOBC)
$HASP890 JOB(MYJOBC)    STATUS=(EXECUTING/IBM1),CLASS=A,
$HASP890                PRIORITY=9,SYSAFF=(IBM1),HOLD=(NONE)
```

JES2 restarts jobs 2, 3, 4, and 5 after they complete execution.

1 `$e j1-*,jm=inf*`

```
JOB00215  $HASP890 JOB(INFLOOP)
$HASP890 JOB(INFLOOP)   STATUS=(EXECUTING/IBM1),CLASS=A,
$HASP890                PRIORITY=9,SYSAFF=(IBM1),HOLD=(NONE)
JOB00220  $HASP890 JOB(INFSPIN)
$HASP890 JOB(INFSPIN)   STATUS=(EXECUTING/IBM1),CLASS=A,
$HASP890                PRIORITY=9,SYSAFF=(IBM1),HOLD=(NONE)
```

JES2 restarts jobs, beginning with job 1 through the highest-numbered job, whose name begins with the characters INF.

$E Lnnnn.xxn - Restart NJE Device Activity

Function

To stop the current transmission or receipt of a job or SYSOUT data over an NJE line and requeue the data for transmission at the appropriate node.

Syntax

```
►►─$E─┬─Lnnnn.JRn─┬─┬──────────────┬─────────────────────────────────────────►◄
      ├─Lnnnn.JTn─┤ │ ┌─,Lnnnn.JRn─┐│
      ├─Lnnnn.SRn─┤ │ ├─,Lnnnn.JTn─┤│
      └─Lnnnn.STn─┘ │ ├─,Lnnnn.SRn─┤│
                    └─└─,Lnnnn.STn─┘┘
```

Parameters

Lnnnn.JRn
The job receiver on line nnnn currently receiving the job. The receiver sends a negative-close record to the transmitter and immediately queues the job for purge. The job is requeued for transmission at the transmitting node.

The $HASP543 message displays the results of this command.

Lnnnn.JTn
The job transmitter on line nnnn currently transmitting the job. The transmitter stops transmitting the job and then requeues it for transmission. The job is purged at the receiving node.

The $HASP522 message displays the results of this command.

Lnnnn.SRn
The SYSOUT receiver on line nnnn currently receiving the SYSOUT data. The receiver sends a negative-close record to the transmitter and purges the data already received. The SYSOUT data is requeued for transmission at the transmitting node.

The $HASP543 message displays the results of this command.

Lnnnn.STn
The SYSOUT transmitter on line nnnn currently transmitting the SYSOUT data. The transmitter stops transmitting the data and requeues it for transmission. The SYSOUT data is purged at the receiving node.

The $HASP532 message displays the results of this command.

Authority Required

This command requires **device** authority. The description of the $T RDRnn command explains how to ensure the proper MVS system command group authority is assigned.

This command requires **control** security access authority. For a description of assigning command input authority, see *z/OS JES2 Initialization and Tuning Guide*.

Scope

Single Member. This command will be in effect for this member only. There is no need to have this command issued to all members of the MAS.

Messages

The individual parameter descriptions list the resulting messages.

Examples

1 `$e l2.st2`

```
JOB00005 $HASP532 MYJOB L2.ST2 RESTARTED
```

The line 2 SYSOUT transmitter 2 stops transmitting the SYSOUT data for the current job and requeues the data for transmission at a later time. The SYSOUT receiver deletes any data it has already received.

2 `$e l4.jr5`

```
JOB00005 $HASP543 MYJOB L4.JR5 DELETED
```

The line 4 job receiver 5 stops receiving data from the current job and immediately queues the job for purging. The job is requeued for transmission at the transmitting node.

$E LINE(nnnn) - Restart Line Activity

Function

To stop the current activity on an RJE or NJE line.

Syntax

```
►►─$E──┬─LINE─┬──┬─nnnn──┬──────────┬──┬──────────────────────────────────────►◄
       └─LNE──┘  │       └─-─┬─nnnn─┬─┘  │
                 │           └─*────┘    │
                 │   ┌──────────────────┐│
                 │   ▼                  │
                 └─(─┬─nnnn─┬──┬──────┬─┴─)─┘
                     └─*────┘  └─-─┬─nnnn─┬─┘
                                   └─*────┘
```

Parameters

nnnn

The subscript defining the line(s) that are restarted. The subscript may specify a specific value or a range of values. For information about specifying ranges for this subscript, see “Syntax Conventions”.

You can also specify wildcards. See “Using filtering to control and display information” on page 99 for additional information.

Authority Required

This command requires **device** authority. The description of the $T RDRnn command explains how to ensure the proper MVS system command group authority is assigned.

This command requires **control** security access authority. For a description of assigning command input authority, see *z/OS JES2 Initialization and Tuning Guide*.

Processing Considerations

Any input currently being transmitted over the specified line immediately stops, and the partial input is purged. Any output being transmitted over the line is placed on the output queue. When the job is again selected for printing, the printer backspaces 1 page before resuming processing. When the job is again selected for punching, punching resumes at the last JES2 checkpoint.

The NJE node or JES2 remote workstation currently signed on to the restarted line is disconnected. If the line status was active, new JES2 remote workstations can sign on to the line or it can be used for networking (via the $S N command). If the line status was draining (for example, after $P LINE(nnnn)), the line becomes drained and unusable for JES2 I/O until the operator starts it again. For an NJE line, $E negates the effect of a $S N,LINE(nnnn) command; that is, it stops attempts to sign on to another node.

Note: If the line status remains draining because an I/O device missed an interrupt, you must issue a second $E LINE(nnnn) command to restart the line.

Scope

Single Member. This command will be in effect for this member only. There is no need to have this command issued to all members of the MAS.

Messages

The $HASP880 message displays the status of the specified lines and their current characteristics.

Example

```
1  $e line(2)

  $HASP880 LINE2  UNIT=0023,STATUS=INACTIVE
```

Line 2 immediately terminates all activity.

$E LOGON(nn) - Restart the JES2/VTAM Interface

Function

To stop and then restart the JES2/VTAM interface on a logical line.

Syntax

```
►►─$E──┬─LGN──┬──┬─nn──┬──────┬─────────────────────────────────────────►◄
       └─LOGON─┘  │     └─-─┬─nn─┬┘                                        │
                  │         └─*──┘                                          │
                  │   ┌──────────────────────────────────────────┐          │
                  │   ▼                                          │          │
                  └─(─────┬─nn─┬──┬──────┬─────────────────────┬─)─────────┘
                          └─*──┘  └─-─┬─nn─┬┘                   │
                                      └─*──┘                    │
```

Parameters

nn The subscript defining the JES2/VTAM interface(s) that are restarted. You may specify a single interface using the value of n on the LOGONn initialization statement that defines that interface. The subscript can also specify a range of values.

Authority Required

This command requires **system** authority. The description of the $T RDRnn command explains how to ensure the proper MVS system command group authority is assigned.

This command requires **control** security access authority. For a description of assigning command input authority, see *z/OS JES2 Initialization and Tuning Guide*.

Processing Considerations

When you issue this command, the current transmission of data stops and the partial input is purged. Any output being transmitted is placed on the output queue. Upon restart, the output is transmitted from the point where it was stopped.

Scope

Single Member. This command has an effect for this member only. There is no need to have this command issued to all members of the MAS.

Messages

The $HASP881 message displays the current status of the specified LOGONs.

Example

1 `$E LOGON(1)`

```
$HASP881 LOGON1  APPLID=JESA,STATUS=INACTIVE
```

JES2 stops and then restarts the specified JES2/VTAM interface. Upon restart, the output is transmitted from the point where it was stopped.

$E MEMBer - Restart Jobs from a Failed Member in a MAS

Function

- To make the jobs that were being processed on the specified failed member eligible for restart on other members in the multi-access spool (MAS) configuration.
- To allow remotes to sign on to other members in the MAS configuration.

Syntax

```
►►─$E─MEMBer─┬─nn──────────────────────────────────────────────────────────────────────────────►
             │   └─-─┬─mm─┬─┘                                                                   │
             │       └─*──┘                                                                     │
             ├─'member'──────────────────────────────────────────────────────────────────────────┤
             │                                                                                   │
             │                                                                                   │
             │                                                                                   │
```

Note: Your installation determines the name of each member in the MAS configuration. The various member name used in examples throughout this publication might not be the names your installation selects.

mm
The numeric value (1-32), range of values

'member'
the 1 to 8 alphanumeric or special ($, #, or @) character name of the MAS member to be displayed. Specify the member number or the member name to obtain information on a specific member, or an asterisk (*) to obtain information for all members of the MAS.

You can also specify wildcards on this parameter. See "Using Wildcards" on page 93 for additional information.

SLEVEL=slevel
Specifies that only members at the specified service level are to be reset.

STATUS[=ACTIVE| DEFINED|DORMANT|DOWN|DRAINED|FAILED| INITIALIZING|INUSE|JESXCF-FAILED|JES2-FAILED| MVS-GONE|TERMINATED|TERMINATING|UNDEFINED| UNDEFINED-PENDING|WAITING-WARMSTART-CLEANUP]
Specifies that the current status of the member is to be restarted. Valid keyword values for the STATUS parameter and their meanings are as follows:

ACTIVE
Displayed when the member that is up and running.

DEFINED
Displays only defined members.

Note: This parameter is only a filter. You can specify this status but DEFINED will not be displayed in the message.

DORMANT
Displayed when the member that is up and running but has not recently accessed the JES2 checkpoint.

DOWN
Displays only TERMINATED, DRAINED or FAILED members.

Note: This parameter is only a filter. You can specify this status but DOWN will not be displayed in the message.

DRAINED
Displayed when JES2 is no longer available and all work has been reset.

FAILED
Displays all members that have a status of JES2-FAILED, JESXCF-FAILED or MVS-GONE.

Note: This parameter is only a filter. You can specify this status but FAILED will not be displayed in the message.

INITIALIZING
Displayed when the member is in the process of initializing.

INUSE
Displays only ACTIVE, INITIALIZING, TERMINATING and DORMANT members.

Note: This parameter is only a filter. You can specify this status but INUSE will not be displayed in the message.

JESXCF-FAILED
Displayed when JES2 abends. Indicates that JESXCF is no longer available.

JES2-FAILED
Displayed when JES2 abends. Indicates that the address space is no longer available.

MVS-GONE
Displayed when the MVS system that JES2 was running on is no longer available and a $E MEMBER is required.

TERMINATED
Displayed after a $PJES2,TERM is issued. Specifies that JES2 is no longer available and a $E MEMBER is required.

TERMINATING
Displayed when JES2 is in the process of terminating.

UNDEFINED
Displayed when the member has not been defined through a MEMBER(n) initialization statement.

UNDEFINED-PENDING
Displayed when the member was previously defined through a MEMBER(n) initialization statement, but is in the process of having its definition deleted by another member in initialization.

WAITING-WARMSTART-CLEANUP
Display members for which warmstart processing has completed with some jobs still pending processing.

SYSNAME=sysname
Specifies that the system name of the MVS image of the member is to be restarted. You can also specify wildcards on this parameter. See “Using Wildcards” on page 93 for additional information.

The system name will not be displayed if it is equal to the member name (NAME=) or if the member is inactive.

VERSION=version
Indicates the version of the JES2 release that is running on this member.

Authority Required

This command requires **system** authority. The description of the $T RDRnn command explains how to ensure the proper MVS system command group authority is assigned.

This command requires **control** security access authority. For a description of assigning command input authority, see *z/OS JES2 Initialization and Tuning Guide*.

Processing Considerations

The failed member must re-IPL. When it does, it will automatically quick start instead of warm start, resulting in significantly less JES2 initialization processing.

If your installation is participating in the AUTOEMEM option, jobs from a failed member can be restarted without this command. For information about the AUTOEMEM option, refer to the $T MASDEF command.

Note: To determine your installation's processing environment, consult your system programmer.

Scope

Single Member. The values supplied for this command will be in effect for this member only.

Messages

The $HASP000 message indicates the command was accepted.

JES2 issues the $HASP493 message when initialization processing is in progress. The $HASP492 message is issued when initialization has completed.

Examples

1 `$e member(sysa)`

```
$HASP673 MEMBER(2) NAME=SYSA
$HASP493 MEMBER SYSA QUICK START IS IN PROGRESS
$HASP492 MEMBER SYSA QUICK START HAS COMPLETED
```

Assuming that the console on which you issue the $E command is attached to SYSC, this command causes the SYSC member to make the jobs that were being processed on SYSA (the failed member) eligible for restart on other members in the MAS configuration.

2 `$e member(1)`

```
$HASP003 RC=(52),MEMBER(1)  - NO SELECTABLE ENTRIES
$HASP003         FOUND MATCHING SPECIFICATION
```

The member (1) specified on the command does not need to be restarted, therefore, JES2 issues the $HASP003 message.

$E OFFn.xx - Restart a Spool Offload Transmitter

Function

To stop the processing of the current job on the specified offload transmitter(s) and restart the current job or a new job.

Syntax

```
►►─$E─┬─OFFn.JT─┬─┬──────────┬─────────────────────────────────────────►◄
      └─OFFn.ST─┘ ├─,OFFn.JT─┤
                  └─,OFFn.ST─┘
```

Parameters

OFFn.JT
The offload job transmitter to be restarted. The subscript specifies a numeric value (1-8) of the associated offload device.

OFFn.ST
The offload sysout transmitter to be restarted. The subscript specifies a numeric value (1-8) of the associated offload device.

Authority Required

This command requires **device** authority. The description of the $T RDRnn command explains how to ensure the proper MVS system command group authority is assigned.

This command requires **control** security access authority. For a description of assigning command input authority, see *z/OS JES2 Initialization and Tuning Guide*.

Processing Considerations

JES2 causes the job on the specified device to be stopped. The job remains on the current queue. JES2 selects the next job eligible to be processed by the device, which may be the same job that was stopped.

Scope

Single Member. This command will be in effect for this member only. There is no need to have this command issued to all members of the MAS.

Messages

The $HASP000 message indicates JES2 has accepted the command. Upon completion, JES2 issues a message to indicate that the job on the device has been restarted.

Example

1 `$e off1.jt, off1.st`

```
$HASP000 OK
$HASP522 jobname  -- OFF1.JT RESTARTED
$HASP523 jobname  -- OFF1.ST RESTARTED
```

JES2 restarts the processing of the job on offload job transmitter 1 and the job on offload sysout transmitter 1.

$E PRTnnnn and $E Rnnnn.PRm - Restart Printer Activity

Function

To stop the printing of the current output group and requeue the output according to its job priority for later processing.

Syntax

```
►►─$E─┬─PRTnnnn─────┬─┬──────────────┬─────────────────────────────────────►◄
      └─Rnnnn.PRm───┘ ├─,PRTnnnn─────┤
                      └─,Rnnnn.PRm───┘
```

Parameters

PRTnnnn
The local printer that is restarted.

Rnnnn.PRm
The remote printer that is restarted.

Processing Considerations

- For the 3800 printer, JES2 restarts the output group that is visible at the transfer station.
- When the output is again selected for processing, printing resumes at the beginning of the output group.

Authority Required

This command requires **device** authority. The description of the $T RDRnn command explains how to ensure the proper MVS system command group authority is assigned.

This command requires **update** security access authority. For a description of assigning command input authority, see *z/OS JES2 Initialization and Tuning Guide*.

Scope

Single Member. This command will be in effect for this member only. There is no need to have this command issued to all members of the MAS.

Messages

The $HASP170 message displays the status of output processing on the specified printer.

Example

1 `$e prt2`

```
$HASP170 PRT2 RESTARTED
```

Printer 2 stops printing the current output group and JES2 returns the output to the output queue in priority sequence. Printer 2 then selects the next available data set for processing.

$E PUNnn and $E Rnnnn.PUm - Restart Punch Activity

Function

To stop the punching of the current output group and requeue the output according to its job priority for later processing.

Syntax

```
►►─$E─┬─PUNnn────────┬─┬──────────────┬──────────────────────────────────────►◄
      └─Rnnnn.PUm────┘ ├─,PUNnn───────┤
                       └─,Rnnnn.PUm────┘
```

Parameters

PUNnn
The local punch that is restarted.

Rnnnn.PUm
The remote punch that is restarted.

Processing Considerations

When the output group is again selected for processing, punching resumes at the beginning of the output group.

Authority Required

This command requires **device** authority. The description of the $T RDRnn command explains how to ensure the proper MVS system command group authority is assigned.

This command requires **update** security access authority. For a description of assigning command input authority, see *z/OS JES2 Initialization and Tuning Guide*.

Scope

Single Member. This command will be in effect for this member only. There is no need to have this command issued to all members of the MAS.

Messages

The $HASP170 message displays the status of output processing on the specified punch.

Example

1 `$e pun3`

```
$HASP170 PUN3 RESTARTED
```

Punch 3 stops punching the current output group and JES2 returns the output to the output queue in priority sequence. Punch 3 then selects the next available data set for processing.

$F PRTnnnn and $F Rnnnn.PRm - Logically Advance Printer Output

Function

To advance printer output a specified number of pages, a specified number of pages from the most recent checkpoint, or to the end of a data set.

Syntax

```
                  ,
                  ┌──────────────────────────────────────────┐
►►─$F──┬─PRTnnnn─┬──┬─,D──────────┬──┬─,PRTnnnn─┬─ . ─┬──────────┬─────────────────────────────►◄
       └─Rnnnn───┘  └─,pages(,C)──┘  └─,Rnnnn.PRm─┘     ├─,D──────┤
                                                        └─,pages(,C)┘

├──┬─,D──────┬──────────────────────────────────────────────────────────────────────────────────┤
   └─,pages──┘
```

Parameters

C Specifies that starting from the most recent checkpoint, output is advanced the number of pages (specified by *pages*). JES2 assumes that all data up to the most recent checkpoint has printed successfully. Therefore, advancing output from the most recent checkpoint is the only way JES2 can ensure no loss of data for remote printers.

D Output is advanced to the end of the data set. Printing resumes with the next data set or the next copy of the current data set.

Note: The action of the CANCEL key on the 3800 printer emulates this operation.

pages
Specifies the number of pages, or for FSS printers, the number of sides, that the output is to be advanced.

For FSS devices, this number can be up to 8 digits in length (1-99999999). For other devices, this number can be up to 4 digits in length (1-9999).

Note: If you are using an impact printer and you specify *pages* for data sets with a line count of zero and no channel skips, JES2 advances output to the end of the data set. This happens regardless of the value specified for *pages* The line count for a data set is specified by the LINECT parameter on the PRINTDEF initialization statement or the LINECT parameter on the /*JOBPARM JES2 control statement, /*OUTPUT JES2 statement, in the JOB statement accounting field, or on the OUTPUT JCL statement.)

For the 3800 printer running in JES mode, specifying 1-9999 causes advancing of the output for the specified number of physical pages.

For FSS mode devices, specifying 1-99999999 causes advancing of the output for the specified number of sides. When simplex printing, there is one side per sheet of paper. When duplex printing, there are two sides per sheet of paper.

$F PRTnnnn and $F Rnnnn.PRm

PRTnnnn
The local printer on which JES2 advances output.

Rnnnn.PRm
The remote printer on which JES2 advances output.

Authority Required

This command requires **device** authority. The description of the $T RDRnn command explains how to ensure the proper MVS system command group authority is assigned.

This command requires **update** security access authority. For a description of assigning command input authority, see *z/OS JES2 Initialization and Tuning Guide*.

Processing Considerations

1. If you omit D, C and nnnn, one page is the default advance.
2. For data sets with no channel skips and a line count of zero, the number of lines in a checkpoint page is specified by either:
   - the CKPTLNS parameter on the /*OUTPUT JES2 statement
   - the CKPTLINE parameter on the PRTnnnn and Rnnnn.PRm initialization statements, the OUTPUT JCL statement or specified using the $T device command

   Note: This applies to 3800 printers in compatibility mode and printers under FSS control.
3. The amount of output between checkpoints (checkpoint interval) is controlled by either:
   - the CKPTLNS and CKPTPGS parameters on the /*OUTPUT JES2 statement
   - the CKPTLINE and CKPTPAGE parameters on the PRTnnnn and Rnnnn.PRm initialization statements, the OUTPUT JCL statement, or specified using the $T device command
4. A backspace results if the printer is printing more than nnnn pages ahead of the most recent checkpoint and you specify an advance of C,nnnn. The backspace amount is the difference between the page indicated by C,nnnn and the current print page. For example, if page 275 is currently being printed and the most recent checkpoint is at page 225, specifying $F Rnnnn.PRm,15,C causes the printer to backspace to page 240.
5. If you try to advance the printer relative to a checkpoint (by specifying C) and no checkpoint exists, the printer backspaces to the beginning of the data set.
6. For the 3800 printer, forward spacing is relative to the page that is visible at the transfer station.
7. You can use this command to skip the printing of unneeded information.
8. The printer must be physically stopped before entering a forward space command for that printer in order to maintain proper line count displays using the $DU,PRTx command.
9. If you are using an impact printer and specify n for data sets with a line count of zero and no channel skips, the data set is advanced to the end. JES2 treats the data set as one contiguous page of data. A $B PRTx or $F PRTx command with the n parameter will either backspace to the beginning of the data set or forward space to the end of the data set, regardless of the value specified for CKPTLINE. before the printer jam and resume printing.

10. For impact printers, the number of pages to logically advance is affected by skip-to-channel commands. JES2 counts all skip-to-channel commands as new pages.

Scope

Single Member. This command will be in effect for this member only. There is no need to have this command issued to all members of the MAS.

Messages

The $HASP170 message displays the status of output processing on the specified printer.

Example

```
1  $f r9.pr1,4,c,prt4

$HASP170 R9.PR1 FWD-SPACED
$HASP170 R9.PR2 FWD-SPACED
```

JES2 advances the output on printer 1 of remote 9 four pages forward of the most recent checkpoint. For exceptions, see processing considerations 4 and 5. JES2 advances the output on local printer 4 one page (see processing consideration 1).

$F PUNnn and $F Rnnnn.PUm - Logically Advance Punch Output

Function

To advance punch output a specified number of cards, a specified number of cards from the most recent checkpoint, or to the end of a data set.

Syntax

```
                  ,
                  ▼
►►──$F──┬──────────┬──┬──────────┬──┬──PUNnn──┬──,D──────────┬──────────────────────────────►◄
        ├─PUNnn────┤  ├─,D──────┤  │         └──,nnnn(,C)───┘
        └─Rnnnn.PUm┘  └─,nnnn(,C)┘  └─Rnnnn.PUm──┬──,D──────┬──┘
                                                 └──,nnnn(,C)┘
```

Parameters

D Output is advanced to the end of the data set. Punching resumes with the next data set or the next copy of the current data set.

nnnn
Output is advanced nnnn (1-9999) cards.

nnnn(,C)
Output is advanced nnnn cards from the most recent checkpoint. JES2 assumes that all data up to the most recent checkpoint has punched successfully. Therefore, advancing output from the most recent checkpoint is the only way JES2 can ensure no loss of data for remote punches.

PUNnn
The local punch on which JES2 advances output.

Rnnnn.PUm
The remote punch on which JES2 advances output.

Authority Required

This command requires **device** authority. The description of the $T RDRnn command explains how to ensure the proper MVS system command group authority is assigned.

This command requires **update** security access authority. For a description of assigning command input authority, see *z/OS JES2 Initialization and Tuning Guide*.

Processing Considerations

1. If you omit D, C, and nnnn, one card is the default advance.
2. The amount of output between checkpoints is controlled by either:
   - The CKPTLNS and CKPTPGS parameters on the /*OUTPUT JES2 statement
   - The CKPTLINE and CKPTPAGE parameters on the PRTnnnn and Rnnnn.PRm initialization statements, the OUTPUT JCL statement, or specified using the $T device command.
3. If the punch is punching more than nnnn cards ahead of the most recent checkpoint and you specify an advance of C,nnnn, a backspace results. The amount of backspace is the difference between the card indicated by C,nnnn and the current punch card. For example, if card 275 is currently being punched

and the most recent checkpoint is at card 225, specifying $F Rnnnn.PUm,15,C causes the punch to backspace to card 240.

4. If you try to advance the punch relative to a checkpoint (by specifying C) and no checkpoint exists, the punch backspaces to the beginning of the data set.
5. You can use this command to skip punching of unneeded cards.

Scope

Single Member. This command will be in effect for this member only. There is no need to have this command issued to all members of the MAS.

Messages

The $HASP170 message displays the status of output processing on the specified punch.

Example

```
1  $f r9.pu1,1,c,pun2

$HASP170 R9.PU1 FWD-SPACED
$HASP170 R9.PU2 FWD-SPACED
```

JES2 advances the output on punch 1 of remote 9 one card forward of the most recent checkpoint. For exceptions, see processing considerations 3 and 4. JES2 advances the output on local punch 2 one card (see processing consideration 1).

$G A - Release a Job at Another Node

Function

To release a job held at another node.

Syntax

```
►►─$G─A─┬──────────┬─,'jobname'─┬─,J│JOBn─┬─,O=─┬─LOCAL│ANYLOCAL─┬──────────────────────────►◄
        ├─Nnnnn────┤            ├─,S│STCn─┤     ├─Nnnnn│nodename─┤
        ├─name─────┤            └─,T│TSUn─┘     └─destid──────────┘
        └─destid───┘
```

Parameters

J|JOBn or S|STCn or T|TSUn
The job ID (batch job (Jn), started task (Sn) or time-sharing user (Tn)) assigned to the job by its originating node. This operand is necessary only if more than one job exists with the specified job name.

'jobname'
The name of the job that is released. The name must appear as coded on the JOB statement and must be enclosed in apostrophes. If the job did not originate at the sending node (or have default print and/or punch output for the sending node), the destination node must have the sending node flagged as having network authority.

Nnnnn|name|destid
The destination node to which JES2 sends this command. You can specify this location by an alias for the name of a node. The destination node must have the sending node flagged as having job authority.

O=
The node on which the job originated. You must specify this parameter if the originating node is not the node at which this $G A command is entered. If you fail to identify the originating node, JES2 issues the $HASP693 message indicating that the job was not found. The valid specifications:

LOCAL|ANYLOCAL
Indicates that jobs are to be run at the local node.

Nnnnn|nodename
Indicates that jobs are to be run at the specified node(s). You can specify a node using a decimal node identifier ranging from 1 to 32767 or an EBCDIC nodename.

destid Indicates that jobs are to be run at the specified node(s). You can specify this location by an alias for the name of a node.

Authority Required

This command requires **job** authority. The description of the $T RDRnn command explains how to ensure the proper MVS system command group authority is assigned.

This command requires **update** security access authority. For a description of assigning command input authority, see *z/OS JES2 Initialization and Tuning Guide*.

Processing Considerations

If you do not know the job ID of the job with this jobname, use the $G D command to display the job IDs of all jobs with this jobname at a specific node.

Scope

Network-Wide. This command only needs to be issued from a single member; the command has an effect across the entire MAS.

Messages

The $HASP000 message indicates the command was accepted.

Example

```
1  $g a n2,'jobx',j25

  $HASP000 OK
```

JES2 sends a global release command record through the network to node 2. Node 2 releases the job named JOBX whose originating node job identifier is J25, and then sends a response back to the sending node.

$G C - Cancel a Job at Another Node

Function

To terminate the scheduling or execution of a job at another node and provide a storage dump if requested.

Syntax

```
►►──$G──C──┬──────────┬──,'jobname'──┬──,J│JOBn──┬──,O=──┬──LOCAL│ANYLOCAL──┬──┬──,Dump──┬──────────────────────►◄
           ├──Nnnnn───┤              ├──,S│STCn──┤       ├──Nnnnn│nodename──┤  └──,Purge─┘
           ├──name────┤              └──,T│TSUn──┘       └──destid──────────┘
           └──destid──┘
```

Parameters

Dump
JES2 provides a storage dump.

J|JOBn or S|STCn or T|TSUn
The job ID (batch job (Jn), started task (Sn), or time-sharing user (Tn)) assigned to the job by its originating node. This operand is necessary only if more than one job exists with the specified job name.

'jobname'
The name of the job that is cancelled. This name must appear as coded on the JOB statement and must be enclosed in apostrophes. If the job did not originate at the sending node (or have default print and/or punch output for the sending node), the destination node must have the sending node flagged as having network authority.

Note: Started tasks and time-sharing users can be cancelled only after they completed execution.

Nnnnn|name|destid
The destination node to which JES2 sends this command. You can specify this location by an alias for the name of a node. The destination node must have the sending node flagged as having job authority.

O=
The node on which the job originated. You must specify this parameter if the originating node is not the node at which this $G C command is entered. If you fail to identify the originating node, JES2 issues the $HASP693 message which indicates the job was not found. The valid specifications:

LOCAL|ANYLOCAL
Indicates that jobs are to be run at the local node.

Nnnnn|nodename
Indicates that jobs are to be run at the specified node(s). You can specify a node using a decimal node identifier from 1 to 32767 or an EBCDIC nodename.

destid Indicates that jobs are to be run at the specified node(s). You can specify this location by an alias for the name of a node.

Purge
JES2 cancels the job output. You must specify this operand to cancel a job that is already in the output phase.

Authority Required

This command requires **job** authority. The description of the $T RDRnn command explains how to ensure the proper MVS system command group authority is assigned.

This command requires **update** security access authority. For a description of assigning command input authority, see *z/OS JES2 Initialization and Tuning Guide*.

Processing Considerations

- If you do not know the job ID of the job with this jobname, use the $G D command to display the job IDs of all jobs with this jobname at a specific node.
- The $T NODE,Auth= command sets the command authority of a specified node.

Scope

Network-Wide. This command only needs to be issued from a single member; the command has an effect across the entire MAS.

Messages

The $HASP000 message indicates the command has been accepted.

The $HASP890 message, displaying the current status of the indicated job, is sent from node 2 to node 1.

Examples

1
```
$g c n2,'myjob'

          $HASP000 OK
 JOB00018 $HASP540 MYJOB   ON L15.SR1     285 RECORDS
JOB00017 N2   M2  $HASP890 MYJOB   EXECUTING A PRIO  9 CANCEL IBM2
```

JES2 sends a global cancel command record through the network to node 2. Node 2 terminates the job named MYJOB (if found and owned by the sending node) and then sends the $HASP890 to the sending node.

The following messages are displayed on the console at node 2:

2
```
 JOB00017 $H ASP395 MYJOB   ENDED
          $HASP309    INIT 3 INACTIVE ******** C=ABC
 JOB00017 $HASP530 MYJOB   ON L15.ST1          285 RECORDS
          $HASP534 L15.ST1 INACTIVE
 JOB00017 $HASP250 MYJOB   IS PURGED
```

$G D - Display Job Information for a Job at Another Node

Function

To display job information for a job at another node.

Syntax

```
►►──$G──D──┬─Nnnnn──┬──,'jobname' ──┬─,J|JOBn──┬──,O=──┬─LOCAL|ANYLOCAL─┬──────────────────────►◄
           ├─name───┤               ├─,S|STCn─┤       ├─nodename───────┤
           └─destid─┘               └─,T|TSUn─┘       └─destid─────────┘
```

Parameters

J|JOBn or S|STCn or T|TSUn
The job ID (batch job (Jn), started task (Sn), or time-sharing user (Tn)) assigned to the job by the originating node. If more than one job exists with the specified job name, and you want to display only one particular job, you must specify this parameter.

'jobname'
The name of the job for which information is displayed. The name must appear as coded on the job statement and must be enclosed in apostrophes. If the job did not originate at the sending node (or have default print and/or punch output for the sending node), the destination node must have the sending node flagged as having network authority.

Nnnnn|name|destid
The destination node to which JES2 sends this command. You can specify this location by an alias for the name of a node. If you omit this operand, JES2 treats this as a global locate command and sends it to all reachable nodes in the network. Each node responds individually to the command.

Note: This command is rejected if the destination node is not currently connected to the network.

O=
The node on which the job originated. You must specify this parameter if the originating node is not the node at which this $G D command is entered. If you fail to identify the originating node, JES2 issues the $HASP693 message which indicates the job was not found. The valid specifications:

LOCAL|ANYLOCAL
Indicates that jobs are to be run at the local node.

Nnnnn|nodename
Indicates that jobs are to be run at the specified node(s). You can specify a node using a decimal node identifier from 1 to 32767 or an EBCDIC nodename.

destid Indicates that jobs are to be run at the specified node(s). You can specify this location by an alias for the name of a node.

Authority Required

This command requires **display** authority. The description of the $T RDRnn command explains how to ensure the proper MVS system command group authority is assigned.

This command requires **read** security access authority. For a description of assigning command input authority, see *z/OS JES2 Initialization and Tuning Guide*.

Processing Considerations

- The information returned from the other node for display contains the same job information displayed in response to a $D J command.
- The job number displayed is the number assigned to the job by its originating node.
- The $T NODE,Auth= command sets the command authority of a specified node.

Scope

Network-Wide. This command only needs to be issued from a single member; the command has an effect across the entire MAS.

Messages

The $HASP000 command indicates that the command has been accepted.

The message id of the message displaying the status of the job is dependent on the operating system on the node to which the command was issued. For example, a command issued to a JES2 system may display $HASP890, depending on the level of JES2 on the target system.

Examples

1 `$gdn2,'myjob'`

```
$HASP000 OK
JOB00019 N2   M2 $HASP890 MYJOB   EXECUTING A PRIO  9 IBM2
```

JES2 sends a global display command record through the network to node 2. Node 2 returns to the sending node a display of job information for all jobs named MYJOB on node 2 that are owned by the sending node (that is, jobs originating at the sending node or jobs for which the sending node has network authority at node 2).

2 `$gd,'joba',j17,o=denver`

```
$HASP000 OK
N2   M2 $HASP693 $GD JOBA   JOB NOT FOUND
```

Because a specific destination node was not specified, JES2 sends a global display command to every reachable node in the network. Each node responds with either a JOB NOT FOUND response or a display of job information for the job named JOBA that originated at the node named DENVER and had an original job number of 17. (Note that, unless the node entering the command is named DENVER, it must have network authority at the node where the job is currently located.)

$G H - Hold a Job at Another Node

Function

To hold a Job at another node.

Syntax

```
►►─$G─H──┬──────────┬──,'jobname'──┬──,J│JOBn──┬──,O=──┬─LOCAL│ANYLOCAL──┬──────────────────────────►◄
         ├─Nnnnn────┤              ├──,S│STCn──┤       ├─Nnnnn│nodename──┤
         ├─name─────┤              └──,T│TSUn──┘       └─destid──────────┘
         └─destid───┘
```

Parameters

J|JOBn or S|STCn or T|TSUn
The job ID (batch job (Jn), started task (Sn), or time-sharing user (Tn)) assigned to the job by its originating node. This operand is necessary only if more than one job exists with the specified job name.

'jobname'
The name of the job that is held. The name must appear as coded on the JOB statement and must be enclosed in apostrophes. If the job did not originate at the sending node (or have default print and/or punch output for the sending node), the destination node must have the sending node flagged as having network authority.

Nnnnn|name|destid
The destination node to which JES2 sends this command. You can specify this location by an alias for the name of a node. The destination node must have the sending node flagged as having job authority.

O=
The node on which the job originated. You must specify this parameter if the originating node is not the node at which this $G H command is entered. If you fail to identify the originating node, JES2 issues the $HASP693 message indicating that the job was not found. The valid specifications:

LOCAL|ANYLOCAL
Indicates that jobs are to be run at the local node.

Nnnnn|nodename
Indicates that jobs are to be run at the specified node(s). You can specify a node using a decimal node identifier from 1 to 32767 or an EBCDIC nodename.

destid Indicates that jobs are to be run at the specified node(s). You can specify this location by an alias for the name of a node.

Authority Required

This command requires **system** authority. The description of the $T RDRnn command explains how to ensure the proper MVS system command group authority is assigned.

This command requires **update** security access authority. For a description of assigning command input authority, see *z/OS JES2 Initialization and Tuning Guide*.

Processing Considerations

- If you do not know the job ID of the job with this jobname, use the $G D command to display the job IDs of all jobs with this jobname at a specific node.
- The $T NODE,Auth= command sets the command authority of a specified node.

Scope

Network-Wide. This command only needs to be issued from a single member; the command has an effect across the entire MAS.

Messages

The $HASP000 command indicates that the command has been accepted.

Example

```
1  $g h newyork,'jobc'

          $HASP000 OK
 JOB00019 N2   M2 $HASP890 JOBC  EXECUTING A PRIO  9 HOLD IBM2
```

JES2 sends a global hold command record through the network to the node named NEWYORK. That node places the job named JOBC in hold status (if found and owned by the sending node) and then sends a response back to the sending node.

$G R, OUT - Request Another Node to Route Job Output

Function

To route normal output for a job at another node to an alternate location.

Syntax

```
►►──$G──R──┬──────────┬──,OUT,'jobname'──┬──,J│JOBn──┬──,O=──┬──LOCAL│ANYLOCAL──┬──,D=──┬──LOCAL│ANYLOCAL──┬──────►
           ├─Nnnnn────┤                  ├──,S│STCn──┤       ├─Nnnnn│nodename──┤       ├─Nnnnn│nodename──┤
           ├─name─────┤                  └──,T│TSUn──┘       └─destid──────────┘       ├─destid──────────┤
           └─destid───┘                                                               ├─Nnnnn.Rmmmm────┤
                                                                                      ├─Ummmm──────────┤
                                                                                      └─node.remote────┘

►─,R=──┬──Rnnnn│nodename──┬──────────────────────────────────────────────────────────────────────────────────►◄
       └─destid──────────┘
```

Parameters

D=

Specifies a destination for a piece of output. Indicates that output sent to the specified destinations can be selected. The value for all routing numbers can range from 1 to 32767. Use parentheses if more than one route code is specified. For specification requirements, see “Route Codes” on page 92.

LOCAL|ANYLOCAL
Indicates that jobs are to be run at the local node.

Nnnnn|nodename
Indicates that jobs are to be run at the specified node(s). You can specify a node using the decimal node identifier or an EBCDIC nodename.

destid Indicates that jobs are to be run at the specified node(s). You can specify this location by an alias for the name of a node. If destid is specified alone, it refers to both the node and the remote.

NnnnnRmmmm|node.remote
Indicates routing to the remote Rmmmm at the node Nnnnn. Rmmmm can also be specified as RMmmmm or RMTmmmm.

Ummmm
Indicates special local routing.

node.destid
Indicates a destination at the specified node. The destid refers to both the node and the remote. The node specified in the destid must be the same as the node portion of the route code. If the number of the remote is reassigned, you can use the destid to send to this node.

remote
Indicates routing to a remote. Remote can be specified in any of the following ways:

LOCAL|ANYLOCAL
Indicates that jobs are to be run at the local node.

Rmmmm
Indicates routing to the specified remote. Rmmmm can also be specified as RMmmmm or RMTmmmm.

destid Indicates routing to a destid referring to a remote.

For more information about specifying userids as remotes, refer to “Route Codes” on page 92.

If you specify Nnnnn[Rnnnn], Nnnnn is converted to an 8-byte EBCDIC node name and, optionally, Rnnnn is right-padded with blanks to create an 8-byte EBCDIC remote name (it is overridden by the R= parameter, if specified). This destination name is placed in the global route command record for the receiving node.

If you specify an installation-defined name for a destination, the name is right-padded with blanks and then placed in the global route command record for the receiving node. The symbolic destination names are validated and converted to internal route codes at the receiving node, not the node at which the $G R command is entered.

J|JOBn or S|STCn or T|TSUn
The job ID (batch job (Jn), started task (Sn), or time-sharing user (Tn)) assigned to the job by its originating node. This operand is necessary only if more than one job exists with the specified job name.

‘jobname’
The name of the job for which output is rerouted. The name must appear as coded on the JOB statement and must be enclosed in apostrophes. If the job did not originate at the sending node (or have default print and/or punch output for the sending node), the destination node must have the sending node flagged as having network authority.

Nnnnn|name|destid
The destination node to which JES2 sends this command. You can specify this location through an alias for the name of a node. The destination node must have the sending node flagged as having job authority.

O=
The node on which the job originated. You must specify this parameter if the originating node is not the node at which this $G R command is entered. If you fail to identify the originating node, JES2 issues the $HASP693 message which indicates the job was not found. In addition, the originating node must have authorized this node for network commands or the $HASP693 message will be issued. For more information about authorizing nodes, refer to the $T NODE command. The valid specifications:

LOCAL|ANYLOCAL
Indicates that jobs are to be run at the local node.

Nnnnn|nodename
Indicates that jobs are to be run at the specified node(s). You can specify a node using a decimal node identifier from 1 to 32767 or an EBCDIC nodename.

destid Indicates that jobs are to be run at the specified node(s). You can specify this location by an alias for the name of a node.

OUT
Job output is rerouted.

R=Rnnnn|nodename|destid
If you specified a symbolic name for a node on the D= parameter, this parameter allows you to specify a remote destination off that node. Whatever is

entered is right-padded with blanks to create an 8-byte EBCDIC remote name, that is placed in the global route command record. Validation and conversion to a remote destination route code is performed at the receiving node.

Note: This parameter overrides a remote specification on the D= parameter.

Authority Required

This command requires **job** authority. The description of the $T RDRnn command explains how to ensure the proper MVS system command group authority is assigned.

This command requires **update** security access authority. For a description of assigning command input authority, see *z/OS JES2 Initialization and Tuning Guide*.

Processing Considerations

- The receiving node ignores the $G R command if the specified job is currently being received on a reader, being received or transmitted on an NJE or RJE line, or if its output is TSO held output.
- If you do not know the job ID of the job with this jobname, use the $G D command to display the job IDs of all jobs with this jobname at a specific node.
- The $T NODE,Auth= command sets the command authority for a specified node.

Scope

Network-Wide. This command only needs to be issued from a single member; the command has an effect across the entire MAS.

Messages

The $HASP000 message indicates the command was accepted.

Examples

1
```
$g r n4,out,'myjob',d=n3r1

$HASP000 OK
```

JES2 sends a global route command record through the network to node 4. Node 4 routes all normal output for the job named MYJOB to node 3 remote workstation 1.

2
```
$g r denver,out,'joba', d=newyork, r=broadway

$HASP000 OK
```

JES2 sends a global route command record through the network to the node named DENVER. That node routes all normal output for the job named JOBA to the remote workstation with the installation-defined name BROADWAY on the node with the installation-defined name NEWYORK.

$G R, XEQ - Request Another Node to Route a Job for Execution

Function

To route a job, located at another node, to yet another node for execution.

Syntax

```
►►──$G──R──┬──────────┬──,XEQ,'jobname'(,J|JOBn) ──,O=──┬─LOCAL|ANYLOCAL──┬──,D=──┬─LOCAL|ANYLOCAL──┬──────────►◄
           ├─Nnnnn────┤                                 ├─Nnnnn|nodename─┤       ├─Nnnnn────────────┤
           ├─name─────┤                                 └─destid─────────┘       ├─destid───────────┤
           └─destid───┘                                                          ├─nodename─────────┤
                                                                                 ├─Nnnnn.Rmmmm──────┤
                                                                                 ├─Ummmm────────────┤
                                                                                 ├─node.remote──────┤
                                                                                 ├─node.destid──────┤
                                                                                 └─remote───────────┘
```

Parameters

D=

The node to which the job is routed.

If you specify Nnnnn, Nnnnn is converted to an 8-byte EBCDIC node name that is placed in the global route command record for the receiving node.

If you specify an installation-defined node name, the name is right-padded with blanks and then placed in the global route command record for the receiving node. Symbolic node names are validated and converted to internal route codes at the receiving node, not the node at which the $G R command is entered. The value for all routing numbers can range from 1 to 32767. The valid specifications:

LOCAL|ANYLOCAL
Indicates that jobs are to be run at the local node.

destid Indicates that jobs are to be run at the specified node(s). You can specify this location by an alias for the name of a node. If destid is specified alone, it refers to both the node and the remote.

Nnnnn|nodename
Indicates that jobs are to be run at the specified node(s). You can specify a node using the decimal node identifier or an EBCDIC nodename.

NnnnnRmmmm|node.remote
Indicates routing to the remote Rmmmm at the node Nnnnn. Rmmmm can also be specified as RMmmmm or RMTmmmm.

Ummmm
Indicates special local routing.

node.destid
Indicates a destination at the specified node. The destid refers to both the node and the remote. The node specified in the destid must be the same as the node portion of the route code. If the number of the remote is reassigned, you can use the destid to send to this node.

remote
Indicates routing to a remote. Remote can be specified in any of the following ways:

LOCAL|ANYLOCAL
Indicates that jobs are to be run at the local node.

Rmmmm
Indicates routing to the specified remote. Rmmmm can also be specified as RMmmmm or RMTmmmm. The value specified for mmmm can range from 1 to 32767.

destid Indicates routing to a destid referring to a remote.

For more information about specifying userids as remotes, see “Route Codes” on page 92.

J|JOBn
The job ID (Job n) assigned to the job by its originating node.

‘jobname’
The name of the job that is routed for execution. The name must appear as coded on the JOB statement and must be enclosed in apostrophes. If the job did not originate at the sending node (or have default print and/or punch output for the sending node), the destination node must have the sending node flagged as having network authority.

Nnnnn|name|destid
The destination node to which JES2 sends this command. You can specify the location by an alias for the name of a node. The destination node must have the sending node flagged as having job authority.

O=
The node on which the job originated. You must specify this parameter if the originating node is not the node at which the $G R command is entered. If you fail to identify the originating node, JES2 issues the $HASP693 message indicating that the job was not found. The valid specifications:

LOCAL|ANYLOCAL
Indicates that jobs are to be run at the local node.

Nnnnn|nodename
Indicates that jobs are to be run at the specified node(s). You can specify a node using a decimal node identifier from 1 to 32767 EBCDIC nodename.

destid Indicates that jobs are to be run at the specified node(s). You can specify this location by an alias for the name of a node.

XEQ
The job is routed for execution.

Authority Required

This command requires **job** authority. The description of the $T RDRnn command explains how to ensure the proper MVS system command group authority is assigned.

This command requires **update** security access authority. For a description of assigning command input authority, see *z/OS JES2 Initialization and Tuning Guide*.

Processing Considerations

- The receiving node rejects the $G R command if the specified job is currently being received on a reader, is currently being received or transmitted on an NJE or RJE line, has already executed, or is currently in execution.

- If you do not know the job ID of the job with this jobname, use the $G D command to display the job IDs of all jobs with this jobname at a specific node.
- The $T NODE,Auth= command sets the command authority for a specified node.

Scope

Network-Wide. This command only needs to be issued from a single member; the command has an effect across the entire MAS.

Messages

The $HASP000 message indicates the command was accepted.

Example

```
1  $g r n3,xeq,'jobc',d=n4

$HASP000 OK
```

JES2 sends a global route command record through the network to node 3. Node 3 routes the job named JOBC to node 4 for execution.

$H A - Hold All Jobs

Function

- To hold all jobs that have affinity for the member through which the command is entered.
- To hold all jobs whose affinities include the specified member.
- To hold all jobs within the entire multi-access spool configuration.

Syntax

```
►►──$H──A──┬──────────┬──────────────────────────────────────────────────►◄
           ├─,memname─┤
           └─,ALL─────┘
```

Parameters

A All jobs currently in the member are held.

If this is a multi-access spool configuration, and neither member name nor ALL is specified, all jobs that have affinity for the member through which the command is entered are held. Even if the member name is specified in the command, all jobs that do not explicitly specify a member affinity is held across the MAS.

ALL
All jobs, regardless of their affinities, are held.

memname
The 1 to 4 character alphameric identifier of a member in the multi-access spool configuration. All jobs that have affinity for the specified member are held.

Authority Required

This command requires **job** authority. The description of the $T RDRnn command explains how to ensure the proper MVS system command group authority is assigned.

This command requires **update** security access authority. For a description of assigning command input authority, see *z/OS JES2 Initialization and Tuning Guide*.

Processing Considerations

- Any new jobs read into the member after you issue this command will not be held.
- Use the $A command to release the held jobs.

Scope

MAS-Wide. This command has an effect across the entire MAS.

Messages

The $HASP000 message indicates the command was accepted.

Examples

1 `$h a`

```
$HASP000 OK
```

JES2 holds all jobs that are currently in the member. If the member is in a multi-access spool configuration, JES2 holds all jobs that have affinity for the member through which the command is entered.

2 `$h a,sysa`

```
$HASP000 OK
```

JES2 holds all jobs that have affinity for member SYSA.

$H Job - Hold Specific Jobs

Function

To place specific jobs in hold status.

Syntax

```
►►─$H──┬─Job──┬──┬─nn──────────────────────────────────────────────────────────────►
       ├─JOBQ─┤  │  └─┬─────┬─┬──────┬─┬──────┬─┘
       ├─JQ───┤  │    └─-──┬─mm──┬─┘ │      │
       ├─Stc──┤  │         └─*───┘   │      │
       └─Tsu──┘  ├─'job'─────────────┤      │
                 │      ┌──────────┐ │      │
                 │      ▼          ┌┴┐     │
                 └─(────┬─nn──┬─┬──┬─┬─mm──┬─┬─)──┘
                        │ *   │ │  │ │ *   │ │
                        ├─job─┤ │  │ │     │ │
                        └─'job'─┘  │ │     │ │
                                   └─┘     └─┘

►─┬──────────────────────────────────────────────────────────────────────────────┬──────────────────────────────────────────────────────────────────────────────┬──────────────────────────────►
  │ ┌──────────────────────────────────────────────────────────────────────────┐ │ ┌──────────────────────────────────────────────────────────────────────────┐ │
  └─┼─┬─────┬─CMDauth──┬─=──┬─┬─cmdauth──────────────────────────────────────┬─┘ └─┼─┬─────┬─Age──────┬─>──┬─days──┬─┘
    │ │ /   │          │ ^= │ │                                              │     │ │ /   │          │    <  │       │
    │ │     │          │    │ │      ┌──────────┐                            │     │ │     │ ┌─DAys─┐ │       │       │
    │ │     │          │    │ │      ▼          ┌┴┐                          │     │ │     │ │ /    │ │       │       │
    │ │     │          │    │ └─(────┬─cmdauth──┬─┬─)──┘                        │     │ │     └─┴──────┴─┘       │       │
    │ │     │          │    │        │ (1)      │ │                            │     │ │                        │       │
    │ │     │          │    │        └──────────┘ │                            │     │ │                        │       │
    │ │     │          │    │                     │                            │     │ │                        │       │
    │ │     │          │    │                     │                            │     │ │                        │       │
    │ │     │          │    │                     
```

Parameters

job
Specifies 1 to 8 alphanumeric, special ($, #, or @) or wildcard characters (or a combination of them) that can be used to select a subset of jobs whose job name matches this combination of characters (mask).

'job'
The name of the job that is held. This name must appear as coded on the JOB statement and must be enclosed in apostrophes. If more than one job exists with this name, no action is taken.

Job
A Batch job or range of batch jobs is to be held.

JOBQ|JQ
Specifies *all* jobs, STCs, and TSUs across the MAS for processing.

Stc
A started task or range of started tasks is to be held.

Tsu
A time-sharing user or range of time-sharing users is to be held.

Age|DAys<days | Age|DAys>days
Specifies the age of affected jobs in days. Only jobs more (with DAYS>nn) or less (with DAYS<nn) than the specified number of days in age are affected, The days are counted from the current hour.

CMDauth=(auth1{,auth2})
Only the jobs that can be affected from the specified remote(s) or node(s) will be held. The valid specifications are:

LOCAL|ANYLOCAL
Only the local devices at the local node can affect the output.

Nnnnn|nodename
Only local devices at the specified node can affect the output.

Rnnnn
Only the specified remote device can affect the output.

NnnnnRnnnn|nodename.Rnnnn
Only the specified remote device at the specified remote node can affect the output.

destid
A destid corresponding to any of the above remote devices.

Note: Specification of the CMDAUTH filter does not override the authority of the console from which the command is issued; both the authority of the console and the specified CMDAUTH filter must match for the job to be affected.

Hours=hours
Specifies the age of affected jobs in hours. Only jobs more (with HOURS>nn) or less (with HOURS<nn) than the specified number of hours in age are affected.

JM|JOBMASK=jobmask
Specifies 1 to 8 alphanumeric, special ($, #, or @) or wildcard characters (or a combination of them) that can be used to select a subset of jobs whose job

name matches this combination of characters (mask). For a description of wildcards, see “Using Wildcards” on page 93.

Notes:

1. This is a positional parameter. Specify this following the job_id (JOB, STC, or TSU), or JOBQ parameter.
2. The JOBMASK parameter is not valid with the *‘jobname ’* parameter.

Queue={CNV|INPUT|OUT|PPU|PURGE|RCV| SETUP|SPIN|XEQ|XMT}
Only jobs on the specified job queue are to be held.

CNV
Only jobs awaiting conversion are to be held.

INPUT
Only jobs on the JES2 $INPUT queue are to be held.

OUT
Only jobs awaiting output processing are to be held.

PPU
Only jobs awaiting print/punch processing are to be held.

PURGE
Only jobs awaiting purge processing are to be held.

RCV
Only jobs on the JES2 $RECEIVE queue are to be held.

SETUP
Only jobs on the JES2 $SETUP queue are to be held.

SPIN
Only jobs awaiting spin processing are to be held.

XEQ
Only jobs awaiting execution are to be held.

XMT
Only jobs queued for network transmission are to be held.

REBUILD={No|Yes}
Jobs on the rebuild queue are to be held (Yes) or not held (No).

SPL|SPOOL={Percent|%|Tgs|Volumes}
Only jobs with specific SPOOL characteristics are to be held:

Percent|%
Only jobs using more (with %>nn) or less (with %<nn) than the specified percentage of the total available spool space are to be held.

Tgs
Only jobs using more (with Tgs>nn) or less (with Tgs<nn) than the specified number of track groups are to be held.

Volumes=(v1,v2,...)
Only jobs which have allocated spool space on the specified spool volume(s) are to be held.

TYPE={JOB|STC|TSU}
Indicates whether only batch jobs (JOB), started tasks (STC), or time-sharing users (TSU) are to be held.

XEQNode=xeqnode
Only jobs which are destined to execute at the specified node, or which have

already executed at the specified node, are to be held. The node name may be specified using the decimal node number (Nnnnnn) or an EBCDIC node name.

Related Commands

To hold entire job classes, or all jobs, see the $A Job, $H A, or $T JOBCLASS commands.

Authority Required

This command requires **job** authority. The description of the $T RDRnn command explains how to ensure the proper MVS system command group authority is assigned.

This command requires **update** security access authority. For a description of assigning command input authority, see *z/OS JES2 Initialization and Tuning Guide*.

Processing Considerations

When a job is restarted using the automatic restart management. the hold status of the job is carried over to the restarted job.

Scope

MAS-Wide. This command has an effect across the entire MAS.

Messages

The $HASP890 message displays the current status of the indicated job.

Examples

1 `$h j34-36`

```
JOB00034  $HASP890 JOB(TESTA)
$HASP890 JOB(TESTA)     STATUS=(AWAITING XMITTER N2),CLASS=A,
$HASP890                PRIORITY=9,SYSAFF=(ANY),HOLD=(JOB)
JOB00035  $HASP890 JOB(HOLDJOB)
$HASP890 JOB(HOLDJOB)   STATUS=(AWAITING EXECUTION),CLASS=H,
$HASP890                PRIORITY=9,SYSAFF=(ANY),HOLD=(JOB)
JOB00036  $HASP890 JOB(SPINTWO)
$HASP890 JOB(SPINTWO)   STATUS=(AWAITING EXECUTION),CLASS=A,
$HASP890                PRIORITY=9,SYSAFF=(ANY),HOLD=(JOB)
```

JES2 places batch jobs 34, 35, and 36 in hold status.

2 `$h j100-105,jm=?ebg*`

```
JOB00100  $HASP890 JOB(IEBGENER)
$HASP890 JOB(IEBGENER)  STATUS=(AWAITING HARDCOPY),CLASS=A,
$HASP890                PRIORITY=1,SYSAFF=(ANY),HOLD=(JOB)
JOB00102  $HASP890 JOB(IEBGENEZ)
$HASP890 JOB(IEBGENEZ)  STATUS=(AWAITING EXECUTION),CLASS=B,
$HASP890                PRIORITY=9,SYSAFF=(ANY),HOLD=(JOB)
JOB00103  $HASP890 JOB(IEBGENEY)
$HASP890 JOB(IEBGENEY)  STATUS=(AWAITING EXECUTION),CLASS=B,
$HASP890                PRIORITY=9,SYSAFF=(ANY),HOLD=(JOB)
```

JES2 places batch jobs in hold status that fall in the range of 100 through 105, and whose job name includes EBG as the second, third and fourth characters.

3 `$h jq,jm=ib*,q=xeq`

```
JOB00102  $HASP890 JOB(IBMUSERX)
$HASP890 JOB(IBMUSERX)  STATUS=(AWAITING EXECUTION),CLASS=B,
```

```
$HASP890                PRIORITY=9,SYSAFF=(ANY),HOLD=(JOB)
JOB00103  $HASP890 JOB(IBMUSERY)
$HASP890 JOB(IBMUSERY)  STATUS=(AWAITING EXECUTION),CLASS=B,
$HASP890                PRIORITY=9,SYSAFF=(ANY),HOLD=(JOB)
```

JES2 places all batch jobs, STCs, and TSUs whose job name begins with the characters IB that are on the execution queue in hold status.

$JDDETAILS - Display details summary of jobs

Function

$JDDETAILS is a JES2 monitor command to display resource, sampling, and wait statistics for the JES2 address space being monitored. This command should be used to determine if a resource problem is impacting JES2. The first part of the display contains statistics on the major JES2 resources. The second part displays JES2 CPU sampling statistics. High sample counts in areas other than ACTIVE or IDLE may indicate a problem. The final section is the MVS wait table. The main task should not enter long MVS WAITs after initialization. Typically waits indicate some resource that was not imediately available to JES2.

The resource usage and CPU statistics are reset at the top of every hour. To view statistics for previous intervals use the $JD HISTORY command. MVS WAIT statistics are not reset. Information displayed is obtained by sampling fields in the JES2 address space. Since the sampling is done with no serialization, it is possible, in rare stuations, that PCE and exit information in the wait table are inaccurate. It is also possible that the high and low utilization numbers may not be the highest and lowest actual utilization if the utilization spikes for a period of time shorter than the sampling interval of 1 second.

Syntax

```
►►──$JD──DETAILS──────────────────────────────────────────────────────────►◄
```

Authority Required

This command requires display authority. The description of the $T RDRnn command explains how to ensure the proper MVS system command group authority is assigned.

This command requires read security access authority. For a description of assigning command input authority, see *z/OS JES2 Initialization and Tuning Guide*.

Processing Considerations

The following restrictions apply to all Monitor commands:

- Monitor commands can only be issued via the MVS command interface (Consoles or SVC 34) or JES2 automatic commands. Monitor commands cannot be issued from the JES2 initialization deck, NJE/RJE, $M commands, or through a reader (INTRDR). Monitor commands can be the object of a $VS command.
- Monitor command are not limited by CONDEF CMDNUM=.
- Monitor command replies are not limited by CONDEF DISPMAX=
- Monitor commands support L= for directing the output but do not honor CONDEF RDIRAREA or REDIRECT statements.
- The JES2 command separator ';' cannot be used to separater monitor commands. If ';' is the MVS command separator, then it can be used to separate monitor commands.

Scope

Single Member. The response to this command will be a display of information about this member only.

Messages

Example

1

```
$JDDETAILS
   $HASP9103 D DETAIL
   $HASP9104 JES2 RESOURCE USAGE SINCE 2002.149 23:00:00
   RESOURCE    LIMIT    USAGE      LOW     HIGH  AVERAGE
   -------- -------- -------- -------- -------- --------
   BERT         1100       89       89       89       89
   BSCB           42        0        0        0        0
   BUFX          249        0        0        0        0
   CKVR            2        0        0        0        0
   CMBS          208        0        0        0        0
   CMDS          200        0        0        0        0
   ICES          101        0        0        0        0
   JNUM         9999        6        6        6        6
   JOES          200        2        2        2        2
   JQES          500        6        6        6        6
   LBUF          151        0        0        0        0
   NHBS           23        0        0        0        0
   SMFB           53        0        0        0        0
   TGS           525       13       13       13       13
   TTAB            3        0        0        0        0
   VTMB           24        0        0        0        0
   $HASP9105 JES2 SAMPLING STATISTICS SINCE 2002.149 23:00:00
   TYPE               COUNT  PERCENT
   ----------------  ------  -------
   ACTIVE               134     0.22
   IDLE               58257    99.77
   LOCAL LOCK             0     0.00
   NON-DISPATCHABLE       0     0.00
   PAGING                 0     0.00
   OTHER WAITS            0     0.00
   TOTAL SAMPLES      58391
   $HASP9106 JES2 MAIN TASK MVS WAIT TABLE
   DATE     TIME     ADDRESS  MODULE   OFFSET WT-COUNT SM-COUNT PCE XIT
   -------- -------- -------- -------- ------ -------- -------- --- ---
   2002.149 22:34:06 011340B4 IGC018  +000B74        4       13  23 JCO
   2002.149 22:33:57 043B2BAE IGC0013I+001BAE        1        1  23 JCO
   2002.149 22:33:57 0003D5F2 HASPCKPT+0065F2        1        2  23 JCO
   2002.149 22:34:01 06C02108 HASPIRA +001108        2      142  23 JCO
   2002.149 22:34:06 00FE2FF6 IEAVEWAT+0007DE        3        6 MLT JCO
   2002.149 22:34:04 06C057C2 HASPIRDA+0027C2        1       24  23 JCO
   2002.149 22:34:06 01182426 IEWFETCH+00152E        3        4  23 JCO
   2002.149 22:34:06 0003FC00 HASPCKPT+008C00        1        6  23 JCO
   2002.149 22:34:06 00066F7A HASPDYN +000F7A        1        1  23 JCO
```

The WT-COUNT in the above table is the number of distinct times this MVS wait was encountered. The SM-COUNT is the number of times the sampling task sampled this wait. For the first wait, it has a wait count of 4 and a sample count of 13. It waited an average of 3 sample intervals at this wait. Since the sample interval is about 1/20 of a second, then this MVS wait lasted on average 3/20 of a second each of the 4 times it was encountered.

In the MVS wait table, the PCE column can contain one of the following:

- nnn –PCEID value for the PCE in control at the time of the MVS wait.
- MLT –Multiple PCEs have MVS waited at this point.

In the MVS wait table, the XIT column can contain one of the following:

- nnn –JES2 exit number at the time of the MVS wait.
- JCO –MVS wait occurred in JES2 code only (never in an exit).

- JNX –JES2 code and exit code both encountered this MVS wait.
- MLT –The MVS wait occurred under multiple exits but never in non-exit JES2 code.

$JDHISTORY - Display history of JES2 resource usage

Function

$JDHISTORY is a JES2 monitor command to display the history of resource usage and CPU statistics over time. At the top of every hour, the current statistics are saved and the count reset. The saved statistics are displayed using the $JD HISTORY command. Up to 72 hours of samples are displayed, based on how long the monitor address space has been running.

Information displayed is obtained by sampling fields in the JES2 address space. Since the sampling is done with no serialization, it is possible that the high and low utilization numbers may not be the highest and lowest actual utilization if the utilization spikes for a short period of time.

Note: If the monitor address space has been active over 72 hours, a single display from the $JDHISTORY command will result in over to 1270 lines of data being displayed.

Syntax

```
►►──$JD──HISTORY──────────────────────────────────────────────────────────►◄
```

Authority Required

This command requires display authority. The description of the $T RDRnn command explains how to ensure the proper MVS system command group authority is assigned.

This command requires read security access authority. For a description of assigning command input authority, see *z/OS JES2 Initialization and Tuning Guide*.

Processing Considerations

The following restrictions apply to all Monitor commands:

- Monitor commands can only be issued via the MVS command interface (Consoles or SVC 34) or JES2 automatic commands. Monitor commands cannot be issued from the JES2 initialization deck, NJE/RJE, $M commands, or through a reader (INTRDR). Monitor commands can be the object of a $VS command.
- Monitor command are not limited by CONDEF CMDNUM=.
- Monitor command replies are not limited by CONDEF DISPMAX=
- Monitor commands support L= for directing the output but do not honor CONDEF RDIRAREA or REDIRECT statements.
- The JES2 command separator ';' cannot be used to separater monitor commands. If ';' is the MVS command separator, then it can be used to separate monitor commands.

Scope

Single Member. This response to this command will be a display of information about this member only.

Messages

Example

1

```
$JD HISTORY
$HASP9130 D HISTORY
   $HASP9131 JES2 BERT USAGE HISTORY
   DATE     TIME        LIMIT    USAGE      LOW     HIGH  AVERAGE
   -------- -------- -------- -------- -------- -------- --------
   2002.149 23:00:00     1100       89       89       89       89
   2002.149 22:33:57     1100       89       83       90       89
   $HASP9131 JES2 BSCB USAGE HISTORY
   DATE     TIME        LIMIT    USAGE      LOW     HIGH  AVERAGE
   -------- -------- -------- -------- -------- -------- --------
   2002.149 23:00:00       42        0        0        0        0
   2002.149 22:33:57       42        0        0        0        0
   $HASP9131 JES2 BUFX USAGE HISTORY
   DATE     TIME        LIMIT    USAGE      LOW     HIGH  AVERAGE
   -------- -------- -------- -------- -------- -------- --------
   2002.149 23:00:00      249        0        0        0        0
   2002.149 22:33:57      249        0        0        7        0
   $HASP9131 JES2 CKVR USAGE HISTORY
   DATE     TIME        LIMIT    USAGE      LOW     HIGH  AVERAGE
   -------- -------- -------- -------- -------- -------- --------
   2002.149 23:00:00        2        0        0        0        0
   2002.149 22:33:57        2        0        0        0        0
   $HASP9131 JES2 CMBS USAGE HISTORY
   DATE     TIME        LIMIT    USAGE      LOW     HIGH  AVERAGE
   -------- -------- -------- -------- -------- -------- --------
   2002.149 23:00:00      208        0        0        0        0
   2002.149 22:33:57      208        0        0        0        0
   $HASP9131 JES2 CMDS USAGE HISTORY
   DATE     TIME        LIMIT    USAGE      LOW     HIGH  AVERAGE
   -------- -------- -------- -------- -------- -------- --------
   2002.149 23:00:00      200        0        0        0        0
   2002.149 22:33:57      200        0        0        0        0
   $HASP9131 JES2 ICES USAGE HISTORY
   DATE     TIME        LIMIT    USAGE      LOW     HIGH  AVERAGE
   -------- -------- -------- -------- -------- -------- --------
   2002.149 23:00:00      101        0        0        0        0
   2002.149 22:33:57      101        0        0        0        0
   $HASP9131 JES2 JNUM USAGE HISTORY
   DATE     TIME        LIMIT    USAGE      LOW     HIGH  AVERAGE
   -------- -------- -------- -------- -------- -------- --------
   2002.149 23:00:00     9999        6        6        6        6
   2002.149 22:33:57     9999        6        0        6        6
   $HASP9131 JES2 JOES USAGE HISTORY
   DATE     TIME        LIMIT    USAGE      LOW     HIGH  AVERAGE
   -------- -------- -------- -------- -------- -------- --------
   2002.149 23:00:00      200        2        2        2        2
   2002.149 22:33:57      200        2        0        2        2
   $HASP9131 JES2 JQES USAGE HISTORY
   DATE     TIME        LIMIT    USAGE      LOW     HIGH  AVERAGE
   -------- -------- -------- -------- -------- -------- --------
   2002.149 23:00:00      500        6        6        6        6
   2002.149 22:33:57      500        6        0        6        6
   $HASP9131 JES2 LBUF USAGE HISTORY
   DATE     TIME        LIMIT    USAGE      LOW     HIGH  AVERAGE
   -------- -------- -------- -------- -------- -------- --------
   2002.149 23:00:00      151        0        0        0        0
   2002.149 22:33:57      151        0        0        0        0
   $HASP9131 JES2 NHBS USAGE HISTORY
   DATE     TIME        LIMIT    USAGE      LOW     HIGH  AVERAGE
   -------- -------- -------- -------- -------- -------- --------
   2002.149 23:00:00       23        0        0        0        0
   2002.149 22:33:57       23        0        0        0        0
```

```
$HASP9131 JES2 SMFB USAGE HISTORY
DATE     TIME        LIMIT    USAGE      LOW     HIGH  AVERAGE
-------- -------- -------- -------- -------- -------- --------
2002.149 23:00:00       53        0        0        0        0
2002.149 22:33:57       53        0        0        0        0
$HASP9131 JES2 TGS  USAGE HISTORY
DATE     TIME        LIMIT    USAGE      LOW     HIGH  AVERAGE
-------- -------- -------- -------- -------- -------- --------
2002.149 23:00:00      525       13       13       13       13
2002.149 22:33:57      525       13        9       13       13
$HASP9131 JES2 TTAB USAGE HISTORY
DATE     TIME        LIMIT    USAGE      LOW     HIGH  AVERAGE
-------- -------- -------- -------- -------- -------- --------
2002.149 23:00:00        3        0        0        0        0
2002.149 22:33:57        3        0        0        0        0
$HASP9131 JES2 VTMB USAGE HISTORY
DATE     TIME        LIMIT    USAGE      LOW     HIGH  AVERAGE
-------- -------- -------- -------- -------- -------- --------
2002.149 23:00:00       24        0        0        0        0
2002.149 22:33:57       24        0        0        0        0
$HASP9132 MAIN TASK SAMPLING PERCENT HISTORY
DATE     TIME       COUNT ACTIVE   IDLE   WAIT L-LOCK N-DISP PAGING
-------- --------  ------ ------ ------ ------ ------ ------ ------
2002.149 23:00:00   58811   0.23  99.76   0.00   0.00   0.00   0.00
2002.149 22:33:57   30791   0.29  99.07   0.61   0.00   0.00   0.00
```

Status is one of:

- ACTIVE– Subtask is active and processing normally.
- INITIALIZING– Subtask is still completing its initialization processing (or is reinitializing after a failure.)
- TERMINATING– Subtask is in the process of shutting down.
- TERMINATED– Subtask has shut down.

Alerts are based on the individual subtask and the functions they perform. Alerts include:

- AWAITING JES2– The JES2 address space is not active so the subtask is not performing its normal function.
- RECOVERING– The subtask has ABENDed and is in the process of recovering the function.

The module information display includes the name of the module, where it is located in the monitor address space, the length of the module (in hex), the date and time the module was assembled, and information on what maintenance was applied to the module.

$JDJES - Display non-severe incident report

Function

$JDJES is a JES2 monitor command to display the current state of the JES2 being monitored. $JDJES displays information about conditions that the monitor is tracking that are not considered problems as well as the data displayed on $JDSTATUS.

As conditions are detected by the monitor, they are ignored until they reach a tracking threshold. At that point a tracking element is created, which can be displayed using the $JDJES command. If the condition persists long enough, it is considered a problem and an alert is issued (highlighted WTO). Alerts are displayed on $JDJES and $JDSTATUS. Tracking and alert messages displayed in these commands are refreshed with the current conditions and may be different from any highlighted message previously issued.

Some conditions are not time related. The existance of the condition may indicate a problem. These conditions are displayed as notices on the $JDJES and $JDSTATUS commands.

Syntax

```
►►──$JD──JES──────────────────────────────────────────────────────────►◄
```

Authority Required

This command requires display authority. The description of the $T RDRnn command explains how to ensure the proper MVS system command group authority is assigned.

This command requires read security access authority. For a description of assigning command input authority, see *z/OS JES2 Initialization and Tuning Guide*.

Processing Considerations

The following restrictions apply to all Monitor commands:

- Monitor commands can only be issued via the MVS command interface (Consoles or SVC 34) or JES2 automatic commands. Monitor commands cannot be issued from the JES2 initialization deck, NJE/RJE, $M commands, or through a reader (INTRDR). Monitor commands can be the object of a $VS command.
- Monitor command are not limited by CONDEF CMDNUM=.
- Monitor command replies are not limited by CONDEF DISPMAX=
- Monitor commands support L= for directing the output but do not honor CONDEF RDIRAREA or REDIRECT statements.
- The JES2 command separator ';' cannot be used to separater monitor commands. If ';' is the MVS command separator, then it can be used to separate monitor commands.

Scope

Single Member. This response to this command will be a display of information about this member only.

Messages

Example

1

```
$JD JES

        $HASP9120 D JES
   $HASP9121 OUTSTANDING ALERTS
   $HASP9201 JES2 MAIN TASK WAIT DETECTED AT HASPSXIT+01F626
   DURATION-000:00:16.39 PCE-COMM     EXIT-NONE JOB ID-NONE
   COMMAND-$TJOBDEF,JOBNUM=3000
   $HASP9122 NO INCIDENTS BEING TRACKED
   $HASP9150 NO JES2 NOTICES
```

$JDMONITOR - Display current status of JES2 monitor subtasks

Function

$JDMONITOR is a JES2 monitor command to display information about the JES2 monitor. It displays the status of all the tasks that make up the monitor as well as information on all the modules modules in the monitor. If the monitor is not functioning properly, this command can provide information to diagnose why.

Syntax

```
►►──$JD──MONITOR──────────────────────────────────────────────────────────►◄
```

Authority Required

This command requires display authority. The description of the $T RDRnn command explains how to ensure the proper MVS system command group authority is assigned.

This command requires read security access authority. For a description of assigning command input authority, see *z/OS JES2 Initialization and Tuning Guide*.

Processing Considerations

The following restrictions apply to all Monitor commands:

- Monitor commands can only be issued via the MVS command interface (Consoles or SVC 34) or JES2 automatic commands. Monitor commands cannot be issued from the JES2 initialization deck, NJE/RJE, $M commands, or through a reader (INTRDR). Monitor commands can be the object of a $VS command.
- Monitor command are not limited by CONDEF CMDNUM=.
- Monitor command replies are not limited by CONDEF DISPMAX=
- Monitor commands support L= for directing the output but do not honor CONDEF RDIRAREA or REDIRECT statements.
- The JES2 command separator ';' cannot be used to separater monitor commands. If ';' is the MVS command separator, then it can be used to separate monitor commands.

Scope

Single Member. This response to this command will be a display of information about this member only.

Messages

Example

```
1 $JD MONITOR

$HASP9100 D MONITOR
   NAME     STATUS       ALERTS
   -------- ------------ ------------------------
   MAINTASK ACTIVE
   SAMPLER  ACTIVE
   COMMANDS ACTIVE
   PROBE    ACTIVE
   $HASP9102 MONITOR MODULE INFORMATION
   NAME     ADDRESS  LENGTH   ASSEMBLY DATE  LASTAPAR LASTPTF
```

```
-------- -------- -------- -------------- -------- --------
HASJMON  06C2B000 00001088 04/13/02 03.05 NONE     NONE
HASJSPLR 06C31000 00002838 04/13/02 02.23 NONE     NONE
HASJCMDS 06C2D000 000030B0 04/13/02 02.23 NONE     NONE
```

Status is one of:

- ACTIVE– Subtask is active and processing normally.
- INITIALIZING– Subtask is still completing its initialization processing (or is reinitializing after a failure.)
- TERMINATING– Subtask is in the process of shutting down.
- TERMINATED– Subtask has shut down.

Alerts are based on the individual subtask and the functions they perform. Alerts include:

- AWAITING JES2– The JES2 address space is not active so the subtask is not performing its normal function.
- RECOVERING– The subtask has ABENDed and is in the process of recovering the function.

The module information display includes the name of the module, where it is located in the monitor address space, the length of the module (in hex), the date and time the module was assembled, and information on what maintenance was applied to the module.

$JDSTATUS - Display current status

Function

$JDSTATUS is a JES2 monitor command to display the current status of JES2. This is the primary monitor command that should be used to diagnose problems with JES2. This command displays all current alerts and any notices that are outstanding.

An alert is generated when a condition, such as a loop, persists for a long enough interval that the monitor considers it abnormal. The monitor generates a highlighted message and creates an element that is displayed in the $JDSTATUS and $JDJES commands. Messages displayed in these commands are refreshed with the current conditions and may be different from the highlighted message previously issued.

Some conditions, which may be considered normal in some situations, may be the cause of JES2 problems. These conditions are not considered time related. Notices are displayed in the $JDSTATUS and $JDJES commands to describe these conditions.

Syntax

```
►►──$JD──STATUS──────────────────────────────────────────────────────►◄
```

Authority Required

This command requires display authority. The description of the $T RDRnn command explains how to ensure the proper MVS system command group authority is assigned.

This command requires read security access authority. For a description of assigning command input authority, see *z/OS JES2 Initialization and Tuning Guide*.

Processing Considerations

The following restrictions apply to all Monitor commands:

- Monitor commands can only be issued via the MVS command interface (Consoles or SVC 34) or JES2 automatic commands. Monitor commands cannot be issued from the JES2 initialization deck, NJE/RJE, $M commands, or through a reader (INTRDR). Monitor commands can be the object of a $VS command.
- Monitor command are not limited by CONDEF CMDNUM=.
- Monitor command replies are not limited by CONDEF DISPMAX=
- Monitor commands support L= for directing the output but do not honor CONDEF RDIRAREA or REDIRECT statements.
- The JES2 command separator ';' cannot be used to separater monitor commands. If ';' is the MVS command separator, then it can be used to separate monitor commands.

Scope

Single Member. This response to this command will be a display of information about this member only.

Messages

Example

```
1 $JD STATUS

$HASP9120 D STATUS
$HASP9121 NO OUTSTANDING ALERTS
```

This indicates that JES2 is functioning normally.

```
1 $JD STATUS

        $HASP9120 D STATUS
   $HASP9121 OUTSTANDING ALERTS
   $HASP9201 JES2 MAIN TASK WAIT DETECTED AT HASPSXIT+01F626
   DURATION-000:02:04.05 PCE-COMM     EXIT-NONE JOB ID-NONE
   COMMAND-$TJOBDEF,JOBNUM=3000
   $HASP9150 NO JES2 NOTICES
```

This indicates that alerts have been issued for JES2. The main task appears to be MVS waiting in module HASPSXIT and the JES2 checkpoint lock is held for an extended period of time.

$JSTOP - Terminate monitor address space

Function

$JSTOP is a JES2 monitor command to terminate the JES2 monitor address space. The monitor address space may need to be stopped because it is not functioning properly or you want to reset the statistics the monitor has been maintianing.

If the JES2 address space is functioning, it will restart the monitor address space withing 32 seconds of discovering it has terminated. This is either a normal termination ($JSTOP) or an abnormal termination (ABEND or CANCEL command).

When the JES2 address space is hot started, it detects if the monitor needs to be restarted because the main task code has been updated.

Syntax

```
►►──$J──STOP──────────────────────────────────────────────────────────►◄
```

Authority Required

This command requires display authority. The description of the $T RDRnn command explains how to ensure the proper MVS system command group authority is assigned.

This command requires read security access authority. For a description of assigning command input authority, see *z/OS JES2 Initialization and Tuning Guide*.

Processing Considerations

The following restrictions apply to all Monitor commands:

- Monitor commands can only be issued via the MVS command interface (Consoles or SVC 34) or JES2 automatic commands. Monitor commands cannot be issued from the JES2 initialization deck, NJE/RJE, $M commands, or through a reader (INTRDR). Monitor commands can be the object of a $VS command.
- Monitor command are not limited by CONDEF CMDNUM=.
- Monitor command replies are not limited by CONDEF DISPMAX=
- Monitor commands support L= for directing the output but do not honor CONDEF RDIRAREA or REDIRECT statements.
- The JES2 command separator ';' cannot be used to separater monitor commands. If ';' is the MVS command separator, then it can be used to separate monitor commands.

Scope

Single Member. The command will be in effect for this member only.

Messages

Example

```
1 $jstop

$HASP9101 MONITOR STOPPING
```

The JES2 monitor is stopped. The JES2 address space will restart the monitor within 32 seconds.

$I PRTnnnn and $I Rnnnn.PRm - Interrupt Printer Activity

Function

To terminate the printing of the current output group and return the output to the output queue.

Syntax

```
►►─$I─┬─PRTnnnn─────┬─┬──────────────┬─────────────────────────────────────►◄
      └─Rnnnn.PRm───┘ ├─,PRTnnnn─────┤
                      └─,Rnnnn.PRm───┘
```

Parameters

PRTnnnn
The local printer that is interrupted.

Rnnnn.PRm
The remote printer that is interrupted.

Authority Required

This command requires **device** authority. The description of the $T RDRnn command explains how to ensure the proper MVS system command group authority is assigned.

This command requires **update** security access authority. For a description of assigning command input authority, see *z/OS JES2 Initialization and Tuning Guide*.

Processing Considerations

- For the 3800 printer, JES2 interrupts the output group that is visible at the transfer station.
- If a checkpoint interval was designated on a device initialization statement, this command causes the printer to backspace to the last checkpoint taken (based on that interval) and requeue the printer data at that point. Otherwise, the printer backspaces 1 or more pages and requeues the data at that point.

  For printers controlled by JES2, a page is defined as:

  1. The last page eject (skip to channel 1) supplied by JES2 (LINECT value) when the programmer did not supply any page ejects (skip to channel commands). The LINECT value (system default page value) is specified on the PRINTDEF initialization statement.
  2. The entire output group, if the programmer supplied LINECT=0 on the /*JOBPARM statement, the /*OUTPUT JES2 statement, in the accounting field on the JOB statement, or on the OUTPUT JCL statement. For a description of the /*OUTPUT JES2 statement and OUTPUT JCL statement, see *z/OS MVS JCL Reference*.
  3. The last page eject (skip to any channel) supplied by the programmer, if that eject is not further back than the value of the LINECT parameter specified on the JOB or JOBPARM statement or on the OUTPUT JES2 statement or OUTPUT JCL statement or on the PRINTDEF initialization statement.

  For printers controlled by the print services facility (PSF), a page is defined as the data bracketed by *begin page* (BPG) and *end page* (EPG) PSF control

records. These records delimit one “impression”, or one side, of a sheet of paper. BPG and EPG records are present on the JES2 spool for data sets created by DCF, GDDM®, and other applications that produce output data in composed-text form. For line-mode data sets sent to a page-mode printer, PSF adds the BPG and EPG records when it processes the spool data. PSF communicates the page count information back to JES2.

Note: A skip to any channel, when supplied by the programmer, is a JES2 logical page. The backspace operation willuse the logical page defined by LINECT, or the programmer supplied skip, depending on which was last used to define the current page.

Scope

Single Member. This command will be in effect for this member only. There is no need to have this command issued to all members of the MAS.

Messages

The $HASP170 message displays the status of output processing on the specified printer.

Example

```
1  $i prt2,prt4

$HASP170 PRT2 INTERRUPTED
$HASP170 PRT4 INTERRUPTED
```

Printers 2 and 4 stop printing their current output, and JES2 returns the output to the output queue. These printers select the next available output groups for processing.

$I PUNnn and $I Rnnnn.PUm - Interrupt Punch Activity

Function

To terminate the punching of the current output group and return the output to the output queue.

Syntax

```
►►─$I─┬─PUNnnnn─────┬─┬──────────────┬─────────────────────────────────────►◄
      └─Rnnnn.PUm───┘ ├─,PUNnnnn─────┤
                      └─,Rnnnn.PUm───┘
```

Parameters

PUNnnnn
The local punch that is interrupted.

Rnnnn.PUm
The remote punch that is interrupted.

Authority Required

This command requires **device** authority. The description of the $T RDRnn command explains how to ensure the proper MVS system command group authority is assigned.

This command requires **update** security access authority. For a description of assigning command input authority, see *z/OS JES2 Initialization and Tuning Guide*.

Processing Considerations

- When the output is interrupted, JES2 does not recalculate its selection priority. The original priority value is used.
- When the output group is again selected for processing, the punch resumes at the last JES2 checkpoint.

Scope

Single Member. This command will be in effect for this member only. There is no need to have this command issued to all members of the MAS.

Messages

The $HASP170 message displays the status of output processing on the specified punch.

Example

```
1  $i pun3,r1.pu5

  $HASP170 PUN3 INTERRUPTED
```

Local punch 3 and remote workstation 1 punch 5 stop punching their current output, and JES2 returns the output to the output queue. These punches select the next available output groups for processing.

$L Job - List Job Output Information

Function

To display the number of held or non-held data sets for the specified job(s).

Syntax

```
►►─$L──┬─Job──────┬──┬──────────────────────────────────────────────────────────────────────────►
       ├─JOBQ─────┤  │ ┌──────────────────────────────────────────────────────────────────────┐
       ├─JQ───────┤  ├─nn──┬──────────┬──────────────────────────────────────────────────────┤
       ├─Stc──────┤  │    └─-──┬─mm─┬─┘                                                       │
       └─Tsu──────┘  │         └─*──┘                                                         │
                     ├─'job'──────────────────────────────────────────────────────────────────┤
                     │                ┌──────────────────────────────────────────────┐        │
                     │                │                                              │        │
                     │                ▼                                              │        │
                     └─(──────┬─nn─┬─┬──────────┬─┬─────────────────────────────────┬─┬─)──┘
                              │    └─*──┘         └─-──┬─mm─┬─┬─────────────────────┬─┘ │
                              │                        └─*──┘ │                     │   │
                              ├─output─────────────────────────┤                     │   │
                              └─'job'──────────────────────────┘                     │   │
                                                                                     │   │
       ┌─────────────────────────────────────────────────────────────────────────────┘   │
       │ ┌─Selection limiting keywords─┐                                                 │
       └─┤                             ├─────────────────────────────────────────────────►◄
         └─Display limiting keywords───┘
```

Display limiting keywords:

```
├─┬─────────────┬─┬─────────┬─┬─────────────┬─┬─────────┬─┬─────────────────────────────┤
  │ ┌─,CMDauth─┐ │ ┌─,Held─┐ │ ┌─,──┬─JM────┬─┐ │ ┌─,Ready─┐ │
  │ └──────────┘ │ └───────┘ │ │    └─JOBMASK─┘ │ └────────┘ │
  └──────────────┘           └─┘                └────────────┘
```

Selection limiting keywords:

```
├─┬─────────────────────────────────────────────────────────────────────────────────────┤
  │ ┌─,──┬─────┬─CMDauth──┬─=──┬─cmdauth──────────────────────────────────────────────┐
  │ │    └─/───┘          └─^=─┘                                                        │
  │ │                                  ┌─,──────────────────────────────────────────┐  │
  │ │                                  │                                            │  │
  │ │                                  ▼                                            │  │
  │ │                                  (1)                                          │  │
  │ │                                  (──────cmdauth──────────────────────────────)──┘
  │ └─────────────────────────────────────────────────────────────────────────────────┘
  │ ┌─,──┬─────┬─JM──────┬─┬─────┬─┬─jobmask─┬─┬─────────────────────────────────────┤
  │    │ ┌─/─┐ │         │ │ ┌─=─┐ │         │
  │    │ └───┘ │         │ │ ├─^=┤ │         │
  │    │       └─JOBMASK─┘ │ ├─>─┤ │         │
  │    │ ┌─/─┐             │ └─<─┘ │         │
  │    │ └───┘             │       │         │
  └────┴───────────────────┴───────┴─────────┘
```

Notes:

1 *cmdauth* can be coded up to 2 times

Parameters

job
Specifies 1 to 8 alphanumeric, special ($, #, or @) or wildcard characters (or a combination of them) that can be used to select a subset of jobs whose job name matches this combination of characters (mask).

'job'
The name of the job that is displayed. This name must appear as coded on the JOB statement and must be enclosed in apostrophes. If more than one job exists with this name, no action is taken.

Job
A batch job or range of batch jobs is to be displayed.

JOBQ|JQ
Specifies *all* jobs, STCs, and TSUs across the MAS for processing.

Stc
A started task or range of started tasks is to be displayed.

Tsu
A time-sharing user or range of time-sharing users is to be displayed.

CMDauth=(auth1{,auth2})
Only the jobs that can be affected from the specified remote(s) or node(s) will be released. The valid specifications are:

LOCAL|ANYLOCAL
Only the local devices at the local node can affect the output.

Nnnnn|nodename
Only local devices at the specified node can affect the output.

Rnnnn
Only the specified remote device can affect the output.

NnnnnRnnnn|nodename.Rnnnn
Only the specified remote device at the specified remote node can affect the output.

destid
A destid corresponding to any of the above remote devices.

Note: Specification of the CMDAUTH filter does not override the authority of the console from which the command is issued; both the authority of the console and the specified CMDAUTH filter must match for the job to be affected.

Held
The $HASP891 message displays all the held job output elements for the specified job(s).

JM|JOBMASK=jobmask
Specifies 1 to 8 alphanumeric, special ($, #, or @) or wildcard characters (or a combination of them) that can be used to select a subset of jobs whose job name matches this combination of characters (mask). For a description of wildcards, see “Using Wildcards” on page 93.

Notes:

1. This is a positional parameter. Specify this following the job_id (JOB, STC, or TSU) or JOBQ parameter.
2. The JOBMASK parameter is not valid with the *‘jobname ’* parameter.

Ready
The $HASP891 message displays all the ready job output elements for the specified job(s).

Related Commands

To display a job’s output data set, see the $DO Job command.

Authority Required

This command requires **display** authority. The description of the $T RDRnn command explains how to ensure the proper MVS system command group authority is assigned.

This command requires **read** security access authority. For a description of assigning command input authority, see *z/OS JES2 Initialization and Tuning Guide*.

Processing Considerations

Using the $L command to display output information for a large range of batch jobs, started tasks, or time-sharing users could result in a shortage of console message buffers (CMBS).

Scope

MAS-Wide. This command displays information about the entire MAS.

Messages

The $HASP891 message displays the count of output groups.

Examples

1 `$l j12`

```
JOB00012 $HASP891 JOB(D15USERC) READY=(A=3),HELD=(NONE)
```

2 `$l j11,h`

```
JOB00011 $HASP891 JOB(D15USER)  HELD=(C=1)
```

JES2 displays the count of held output groups for batch job 11.

3 `$l j11,ready`

```
JOB00011 $HASP891 JOB(D15USER)  READY=(A=3,B=2,Z=1)
```

JES2 displays the count of ready output groups for batch job 11.

$Mnn - Send Commands to Other MAS Members

Function

Use the $M command to send any command acceptable to the appropriate MAS member through the network to the indicated member.

```
►►──$M──nn──,'command' ──────────────────────────────────────────────────►◄
```

Parameters

,'command'
Specifies the command to be transmitted. The command is preceded by a comma and enclosed in single quotes. The command will be transmitted as it appears and should be in the same format as it would be if entered from the local console of the receiving system. If the command is a JES2 command, be sure to begin it with the appropriate remote/reader command character (usually a dollar sign) or, optionally, the valid JES2 command character of the receiving system.

nn The specific multi-access spool member of this node to which the command is to be sent.

Authority Required

This command requires **display** authority. The description of the $T RDRnn command explains how to ensure the proper MVS system command group authority is assigned.

This command requires **read** security access authority. For a description of assigning command input authority, see *z/OS JES2 Initialization and Tuning Guide*.

Scope

Single Member. The values supplied for this command will be in effect for this member only. There is no need to have this command issued to all members of the MAS.

Messages

The $HASP000 message indicates the command was accepted.

Example

```
1  $m 2,'$d q'

  $HASP000 OK
```

A JES2 command to display the number of queued jobs is sent to member 2, acted upon by JES2 in member 2, and the resulting display is transmitted back through the network and appears at the active MCS console of the entry member. If the entry member is not defined as having network authority at member 2, the resulting display includes only a count of those jobs owned by the entry MAS configuration member.

$Nnnnn - Send Commands through the Network

Function

Use the $N command to send any command acceptable to the appropriate node or node member through the network to the indicated system.

```
►►─$N─┬──────────────────┬─,'command'──────────────────────────────────►◄
      │─nnnn(Mmm)────────│
      └─,D=──┬─Nnnnn─┬───┘
             └─name──┘
```

Parameters

,'command'
Specifies the command to be transmitted. The command is preceded by a comma and enclosed in single quotes. The command will be transmitted as it appears and should be in the same format as it would be if entered from the local console of the receiving system. If the command is a JES2 command, be sure to begin it with the appropriate remote/reader command character (usually a dollar sign) or, optionally, the valid JES2 command character of the receiving system.

Note:

1. If one of the commands listed below originates from another node in the network and the operand does not specify a node (first-level destination), the receiving node defaults the first-level destination to the node where the command originated.
2. If one of the commands listed below is sent to another node in the network using the $N command, be aware that the receiving node will default the node (first-level destination) of the operand to the sending node. If another node is desired, specify a destination on the operand that will resolve to the desired node (first level destination) at the receiving node.

   These rules apply to the following commands and operands:
   - $COJ,R=
   - $D F, R=
   - $D M, D=
   - $D N, R=
   - $D N, XMTnnnn
   - $O J, R=
   - $POJ,R=
   - $R, R=
   - $R, D=
   - $T O, D=

D=Nnnnn|name
Identifies the node (by number or installation-defined name) to which the command text is to be sent.

nnnn[Mnn]
Identifies the node and, optionally, the specific multi-access spool member of that node to which the command text is to be sent.

Authority Required

This command requires **display** authority. The description of the $T RDRnn command explains how to ensure the proper MVS system command group authority is assigned.

This command requires **read** security access authority. For a description of assigning command input authority, see *z/OS JES2 Initialization and Tuning Guide*.

Scope

Network-Wide. This command only needs to be issued from a single member; the command has an effect across the entire MAS.

Messages

- The $HASP000 message indicates the command was accepted.
- The $HASP249 message echoes the command you issued, indicating that the command was received from a remote job entry (RJE) workstation or another JES2 node.

Example

```
1 $n 2,'$d q'

  $HASP000 OK
  $HASP249 N1     $DQ
```

A JES2 command to display the number of queued jobs is sent to node 2, acted upon by JES2 in node 2, and the resulting display is transmitted back through the network and appears at the active MCS console of the entry node. If the entry node is not defined as having network authority at node 2, the resulting display includes only a count of those jobs owned by the entry node.

$N PRTnnnn and $N Rnnnn.PRm - Repeat Printer Output

Function

To repeat the printing of job output.

Syntax

```
►►──$N──┬─PRTnnnn──────┬─┬──────────────┬──────────────────────────────────────►◄
        └─Rnnnn.PRm────┘ │ ┌─,PRTnnnn───┐│
                         └─└─,Rnnnn.PRm─┘┘
```

Parameters

PRTnnnn
The local printer currently printing the output.

Rnnnn.PRm
The remote printer currently printing the output.

Authority Required

This command requires **device** authority. The description of the $T RDRnn command explains how to ensure the proper MVS system command group authority is assigned.

This command requires **update** security access authority. For a description of assigning command input authority, see *z/OS JES2 Initialization and Tuning Guide*.

Processing Considerations

- For the 3800 printer, JES2 repeats the printing of the output group that is visible at the transfer station.
- When you want to print several copies of an output group, wait for the $HASP170 PRINTER REPEATED message to appear between the scheduling of each printing.

Scope

Single Member. This command will be in effect for this member only. There is no need to have this command issued to all members of the MAS.

Messages

The $HASP170 message displays the status of output processing on the specified printer.

Example

1 `$n prt3`

```
$HASP170 PRT3 REPEATED
```

When the output currently being printed by printer 3 finishes, JES2 places the output group back on the output queue for reprinting.

$N PUNnn and $N Rnnnn.PUm - Repeat Punch Output

Function

To repeat the punching of job output.

Syntax

```
►►─$N─┬─PUNnn──────────┬─┬──────────────┬─────────────────────────────────────►◄
      └─Rnnnn.PUm──────┘ │ ┌─,PUNnn────┐ │
                         └─└─,Rnnnn.PUm─┘─┘
```

Parameters

PUNnn
The local punch currently punching the output.

Rnnnn.PUm
The remote punch currently punching the output.

Authority Required

This command requires **device** authority. The description of the $T RDRnn command explains how to ensure the proper MVS system command group authority is assigned.

This command requires **update** security access authority. For a description of assigning command input authority, see *z/OS JES2 Initialization and Tuning Guide*.

Processing Considerations

When you want to punch several copies of an output group, wait for the $HASP170 PUNCH REPEATED message to appear between the scheduling of each punching.

Scope

Single Member. This command will be in effect for this member only. There is no need to have this command issued to all members of the MAS.

Messages

The $HASP170 message displays the status of output processing on the specified punch.

Example

```
1  $n pun2

  $HASP170 PUN2 REPEATED
```

When the output currently being processed on punch 2 finishes, JES2 places the output back on the output queue for repeated punching.

$O Job - Release or Cancel Held Output Groups

Function

To release or cancel held output groups. An output group (or job output element) with an output disposition of HOLD or LEAVE that is not routed to another node is ‘held’. All output groups routed to other nodes, regardless of disposition, are considered ‘ready’ at this node because output is not held until it reaches its destination.

Syntax

```
►►─$O──┬─Job──┬──┬─nn──────────────────────────┬──┬──────┬──┬──────┬──►
       ├─JOBQ─┤  │  └─-──┬─mm──┬──┘           │  └─,─┬─/─┬─ALL─┘  └─,─┬─/─┬─CANcel─┘
       ├─JQ───┤  │       └─*───┘                │      └───┘           └───┘
       ├─Stc──┤  ├─'output'─────────────────────┤
       └─Tsu──┘  │          ┌──────────────────┐
                 │          ▼                  │
                 └─(──┬─nn──┬──┬─-──┬─mm──┬──┬─┴─)──┘
                      │ └─*─┘  │    └─*───┘  │
                      ├─output─────────────────┤
                      └─'output'───────────────┘

►──┬──────┬─CMDauth──┬─=──┬─cmdauth──────────────┬──┬──────┬─Age──┬─/─┬──┬─>─┬─days─┬──►
   └─,─┬─/─┘          └─^=─┘                      │  └─,─┬─/─┬─DAys─┘   └─<─┘
       └───┘                  ┌──────────────────┐      └───┘
                              ▼       (1)        │
                              └─(──────cmdauth───┴─)──┘

►──┬──────┬─Hours──┬─>──┬─hours──┬──┬──────┬─JM──────┬─/─┬─JOBMASK─┬─/─┬──┬─=──┬─jobmask──┬──►
   └─,─┬─/─┘        └─<──┘        │  └─,─┬─/─┘         └───┘         └───┘  ├─^=─┤           │
       └───┘                           └───┘                                ├─>──┤           │
                                                                            └─<──┘           │

►──┬──────┬─OUTGrp──┬─=──┬─outgrp──┬──┬──────┬─PAGES──┬─=──┬─pages──┬──┬──────┬─PROTected──┬──►
   └─,─┬─/─┘         └─^=─┘         │  └─,─┬─/─┘        ├─^=─┤        │  └─,─┬─/─┘            │
       └───┘                         └───┘              ├─>──┤        │      └───┘            │
                                                        └─<──┘        │                       │

►──┬──────┬─Queue──┬─=──┬─queue──┬──┬──────┬─REBUILD──┬─=──┬─No──┬──┬──►
   └─,─┬─/─┘        └─^=─┘        │  └─,─┬─/─┘         └─^=─┘ └─Yes─┘  │
       └───┘                      └───┘                                │

►──┬──────┬─RECORDS──┬─=──┬─records──┬──┬──────┬─Dest──────┬─=──┬─routecde──┬──►◄
   └─,─┬─/─┘          ├─^=─┤          │  └─,─┬─/─┬─Routecde─┘   ├─^=─┤            │
       └───┘          ├─>──┤          │      └───┘   └─/─┘      ├─>──┤            │
                      └─<──┘          │                         └─<──┘            │
```

Notes:

1 *cmdauth* can be coded up to 2 times

Parameters

output
Specifies 1 to 8 alphanumeric, special ($, #, or @) or wildcard characters (or a combination of them) that can be used to select a subset of jobs whose job name matches this combination of characters (mask).

‘output’
The name of the job that is to released/cancelled. This name must appear as

coded on the JOB statement and must be enclosed in apostrophes. If more than one job exists with this name, no action is taken.

Job
A batch job or range of batch jobs is to be released/cancelled.

JOBQ|JQ
Specifies *all* jobs, STCs, and TSUs across the MAS for processing.

Stc
A started task or range of started tasks is to be released/cancelled.

Tsu
A time-sharing user or range of time-sharing users is to be released/cancelled.

Age|DAys<days | Age|DAys>days
Specifies the age of affected output in days. Only output more (with DAYS>nn) or less (with DAYS<nn) than the specified number of days in age are affected, The days are counted from the current hour.

ALL
The Held output in all classes is released or cancelled. The ALL operand and the Q=keyword are mutually exclusive.

CANcel
JES2 cancels all of the selected held output.

Note: If CANCEL is not specified on the $O command, the output will not be deleted, but only released, meaning that it will be moved from the HELD to OUTPUT queue.

CMDauth=(auth1{,auth2})
Only the output that can be affected from the specified remote(s) or node(s) will be released. The valid specifications are:

LOCAL|ANYLOCAL
Only the local devices at the local node can affect the output.

Nnnnn|nodename
Only local devices at the specified node can affect the output.

Rnnnn
Only the specified remote device can affect the output.

NnnnnRnnnn|nodename.Rnnnn
Only the specified remote device at the specified remote node can affect the output.

destid
A destid corresponding to any of the above remote devices.

Note: Specification of the CMDAUTH filter does not override the authority of the console from which the command is issued; both the authority of the console and the specified CMDAUTH filter must match for the job to be affected.

Dest|Routecde=routecde
Specifies the destination to which the output should be released. When preceded by a slash (/), it indicates that only held output which has already been routed to this destination should be released.

Notes:

1. NODENAME=REQUIRED on the DESTDEF initialization statement will cause JES2 to require that a userid be prefixed with a node name.
2. Greater than (> or >=) and less than (< or <=) filters may be used in conjunction to support route code ranges. For example, you could specify the filters R>=R1,R<=R7 to affect output for all remotes in the range R1 to R7, Note that:
   - The destination being filtered upon is converted to its binary equivalent prior to the comparison.
   - When using nodal ranges, a specification of ″nodename.*″ must be used. Only the nodal routing of the output will be compared.

H|Hours=hours
Specifies the age of affected output in hours. Only output more (with HOURS>nn) or less (with HOURS<nn) than the specified number of hours in age are affected.

JM|JOBMASK=jobmask
Specifies 1 to 8 alphanumeric, special ($, #, or @) or wildcard characters (or a combination of them) that can be used to select a subset of jobs whose job name matches this combination of characters (mask). For a description of wildcards, see “Using Wildcards” on page 93.

Notes:

1. This is a positional parameter. Specify this following the job_id (JOB, STC, or TSU), or JOBQ parameter.
2. The JOBMASK parameter is not valid with the *‘output’* parameter.

OUTGrp=outgrp
Specifies the job output element(s) that are to be released or cancelled.

grpid
The 1 to 8 character alphanumeric group ID that is either specified by the user in the JCL or generated by JES2. If you specify only group ID (OUTGRP=grpid) on this command, JES2 releases or cancels all the held job output elements in that group.

joeid1
A number assigned by JES2 to distinguish between job output elements within the output group. If you specify only group ID and the first qualifier (OUTGRP=grpid.joeid1) on this command, JES2 releases or cancels all copies of the specified job output element in that group.

joeid2
A number assigned by JES2 to distinguish between several copies of grpid.joeid1. If you specify group ID and both qualifiers (OUTGRP=grpid.joeid1.joeid2) on this command, JES2 releases or cancels only the specified copy (joeid2) within the job output element (joeid) in that group.

PAGES
Only output groups with the specified number of pages are to be released or cancelled.

PROTected
Indicates that **all** specified output groups, including output groups that have been specified ‘protected’, should be purged. The ’protected’ attribute is assigned to programs running in a transactional environment such as APPC or OMVS, where the transaction output is associated with the initiators like

ASCHINIT or BPXAS. The ‘protected’ attribute can also be assigned to jobs by JES2 installation exits. APPC output is always protected. This parameter is only valid when used with the CANCEL parameter.

Note: Since the OUTGRP= parameter identifies the output to be cancelled, you do not need to specify PROTECTED with this operand, even for output that is protected.

Queue=queue
The held output in the specified output class(es) (A-Z and 0-9) is released or cancelled. A maximum of 36 classes may be specified.

REBUILD={No|Yes}
Output on the rebuild queue is to be released/cancelled (Yes) or not released/cancelled (No).

RECORDS
Only output groups with the specified number of records are to be released or cancelled.

Authority Required

This command requires **job** authority. The description of the $T RDRnn command explains how to ensure the proper MVS system command group authority is assigned.

This command requires **update** security access authority. For a description of assigning command input authority, see *z/OS JES2 Initialization and Tuning Guide*.

Processing Considerations

Once a held output group has been released, the group is no longer available for processing by the TSO/E output command. For more information, see the $HASP686 message in *z/OS JES2 Messages*.

Scope

MAS-Wide. This command has an effect across the entire MAS.

Messages

THE $HASP686 message is displayed to indicate which output groups were released or cancelled by this command.

Examples

1
```
$o j'payroll',q=abc,r=r2

JOB00213 $HASP686 OUTPUT(PAYROLL)  OUTGRP=1.1.1 RELEASED
JOB00213 $HASP686 OUTPUT(PAYROLL)  OUTGRP=8.1.1 RELEASED
JOB00213 $HASP686 OUTPUT(PAYROLL)  OUTGRP=9.1.1 RELEASED
JOB00213 $HASP686 OUTPUT(PAYROLL)  OUTGRP=24.1.1 RELEASED
```

JES2 releases all held output datasets in classes A, B, and C, that belong to the batch job named PAYROLL, to remote work station 2. Output data sets in other output classes are unaffected.

2
```
$o j'payroll',q=abc,/r=r2

JOB00213 $HASP686 OUTPUT(PAYROLL)  OUTGRP=1.1.1 RELEASED
JOB00213 $HASP686 OUTPUT(PAYROLL)  OUTGRP=9.1.1 RELEASED
```

JES2 releases all held output datasets in classes A, B, and C, that belong to the batch job named PAYROLL and currently specify a routing to remote workstation 2. Output data sets in other output classes or destined for other remote work stations are unaffected.

3 `$o j1-20,days>2 -or- $o j1-20,hours>48`

```
JOB00003 $HASP686 OUTPUT(REPORT1)  OUTGRP=1.1.1 RELEASED
JOB00003 $HASP686 OUTPUT(REPORT1)  OUTGRP=2.1.1 RELEASED
JOB00004 $HASP686 OUTPUT(REPORT2)  OUTGRP=1.1.1 RELEASED
        .
        .
        .
JOB00020 $HASP686 OUTPUT(REPORT20) OUTGRP=11.1.1 RELEASED
JOB00020 $HASP686 OUTPUT(REPORT20) OUTGRP=12.1.1 RELEASED
```

JES2 releases all held output that is at least 2 days old for batch jobs 1 through 20.

4 `$o jq,q=abjk`

```
JOB00020 $HASP686 OUTPUT(MYJOB)    OUTGRP=1.1.1 RELEASED
JOB00037 $HASP686 OUTPUT(YOURJOB)  OUTGRP=2.1.1 RELEASED
```

JES2 releases all held output data sets in classes A, B, J, and K.

$P - Stop JES2 Processing

Function

To stop all system initiators, printers, punches, job transmitters, and SYSOUT transmitters after they complete their current activity.

Syntax

```
►►──$P──────────────────────────────────────────────────────────────────►◄
```

Authority Required

This command requires **system** authority. The description of the $T RDRnn command explains how to ensure the proper MVS system command group authority is assigned.

This command requires **control** security access authority. For a description of assigning command input authority, see *z/OS JES2 Initialization and Tuning Guide*.

Processing Considerations

Although JES2 discontinues scheduling of work, it continues to accept new jobs through input devices.

The $DMEMBER command will tell you if a $P is in effect.

Scope

Single Member. This command will be in effect for this member only.

However, you might want this command to be applied to all members of the MAS (to ensure a consistent environment across the MAS). If so, you can use the MVS ROUTE *ALL command to issue this command to all active members (if the JES2 command character is the same on all members). See *z/OS MVS System Commands* for more information on using the ROUTE *ALL command.

Messages

The $HASP623 message indicates the member is draining. When all functions are complete, JES2 issues the $HASP099 message.

Example

1 `$p`

```
$HASP623 MEMBER DRAINING
$HASP099 ALL AVAILABLE FUNCTIONS COMPLETE
```

JES2 discontinues scheduling of work and does not start any new functions.

$P I[nnmm] - Stop an Initiator

Function

To stop the specified initiators and free associated resources.

Syntax

```
►►─$P──┬─I────┬──┬──────────────────────────────────────────────────────────────────►
       └─Init─┘  │ ┌─────────────────────────────────────────────────────────────┐
                 ├─nn──┬──────────┬──┬──────────────────────────────────────────┤
                 │     └─-──┬─mm─┬─┘  │ ┌──────────────────────────────────────┐
                 │          └─*──┘    │ │                                      │
                 ├─'init'─────────────┤ │ ┌─,─┐                                │
                 │                    │ │ ▼   │                                │
                 └─(──┬─nn──┬──┬──────┬─┴─┴───┴──────────────────────────────┬─)─┘
                      │ └─*─┘  └─-──┬─mm─┬─┘                                  │
                      │             └─*──┘                                    │
                      ├─init──────────────────────────────────────────────────┤
                      └─'init'────────────────────────────────────────────────┘

►──┬──────────────────────────────────────────────────────────────────────────┬──┬──────────────────────────────────────────────────────────────────────────┬──►◄
   │ ┌─────────────────────────────────────────────────────────────────────┐  │  │ ┌─────────────────────────────────────────────────────────────────────┐  │
   └─,──┬─/─┘──STATUS──┬─=──┬──┬─ACTIVE───────────┬──┬──┬──
```

STC=stc
Specifies the job id of the initiator to be stopped.

Authority Required

This command requires **system** authority. The description of the $T RDRnn command explains how to ensure the proper MVS system command group authority is assigned.

This command requires **control** security access authority. For a description of assigning command input authority, see *z/OS JES2 Initialization and Tuning Guide*.

Processing Considerations

If JES2 has not received verification of address space creation for the specified initiator, it stops the specified logical initiator; no MVS initiator job is cancelled.

Scope

Single Member. The values supplied for this command will be in effect for this member only.

Depending on your installation's setup, however, you might want this command to be applied to all members of the MAS (to ensure a consistent environment across the MAS). If so, you can use the MVS ROUTE *ALL command to issue this command to all active members (if the JES2 command character is the same on all members). See *z/OS MVS System Commands* for more information on using the ROUTE *ALL command.

Messages

The $HASP395 message indicates the specified initiator is stopped.

Example

```
1  $p i3-5

  STC00003 $HASP395 INIT ENDED
  STC00004 $HASP395 INIT ENDED
  STC00005 $HASP395 INIT ENDED
```

JES2 stops initiators in the EBCDIC range X'404040F3' to X'404040F5'. JES2 stops initiators 3, 4, and 5 after they complete processing their current jobs, and then frees the associated system resources.

$P JES2 - Withdraw JES2 from the System

Function

To withdraw JES2 from the system to which the entering console is attached.

Syntax

```
►►──$P──JES2──┬──────────────────┬──────────────────────────────────────────────────►◄
              ├─,ABEND(,FORCE)───┤
              ├─,QUICK───────────┤
              └─,TERM────────────┘
```

Parameters

ABEND

JES2 terminates immediately, with one exception, regardless of any JES2 or system activity. The $HASP095 message displays the $PJ2 termination code. The exception occurs if the checkpoint resides on a coupling facility structure and the member is processing a write request. JES2 issues the $HASP552 message and delays the $P JES2,ABEND command until the checkpoint write has completed.

Note: If $P JES2, ABEND does not succeed, specify FORCE.

FORCE

A call is made to the recovery termination manager (RTM) to immediately terminate the JES2 address space. The $HASP095 message displays the $PJF termination code.

Use this parameter only if the JES2 main task is not responding to the

$P JES2, ABEND.

If you enter the FORCE parameter without first attempting a $P JES2,ABEND command, JES2 issues the $HASP553 message and ignores the command until you try the ABEND option. Specifying the FORCE parameter can cause unpredictable results.

Note: The $PJES2,ABEND,FORCE command ***must*** be specified as a string of characters. Blanks are not permitted within either the command verb or the individual parameters of the command.

JES2

JES2 terminates. If $P JES2 does not successfully remove JES2 from the system, specify ABEND or TERM.

Note: If JES2 is processing any jobs, or any devices are active, you cannot remove JES2 from the system unless you specify the ABEND or TERM operand. Started RJE and NJE linesalso prevent withdrawal, even if no remotes or NJE nodes are active on those lines. In this case, the JES2 operand is ignored, and the $PJES2 command merely stops JES2 processing (which can be restarted by $S) and drains JES2 work from the system. You may display any activity using the $D A or $D U commands.

QUICK

JES2 attempts to withdraw cleanly, regardless of any cross-system activity.

TERM
JES2 terminates but does not terminate active programs and devices. A JES2 hot start will not be permitted. It is recommended that the JES2 address space be terminated prior to bringing down MVS. The preferred method to do this is via a clean shutdown of JES2 using the $PJES2 command. If this is not possible, a $PJES2,TERM should be used.

Note: This termination option ensures that track groups are not lost.

Authority Required

This command requires **system** authority. The description of the $T RDRnn command explains how to ensure the proper MVS system command group authority is assigned.

This command requires **control** security access authority. For a description of assigning command input authority, see *z/OS JES2 Initialization and Tuning Guide*.

Processing Considerations

- The $P JES2 command deactivates event tracing with the same results as specifying $T TRACEDEF,ACTIVE=N.
- After the $P JES2 command completes its processing, you should issue the HALT EOD command if you are planning to turn the system over for software or hardware maintenance. Issuing the HALT EOD command ensures that important statistics and data records in storage are not permanently lost. Refer to *z/OS MVS System Commands* for further information regarding system action.
- You can return JES2 to the system by issuing an MVS START command which invokes a procedure in SYS1.PROCLIB that contains the JCL necessary to start JES2.
- Since the QUICK keyword ignores cross-system users while deciding whether to end the JES2 program, those applications (cross-system users) can abnormally end.

Scope

Single Member. This command will be in effect for this member only.

However, you might want this command to be applied to all members of the MAS (to ensure a consistent environment across the MAS). If so, you can use the MVS ROUTE *ALL command to issue this command to all active members (if the JES2 command character is the same on all members). See *z/OS MVS System Commands* for more information on using the ROUTE *ALL command.

Messages

The $HASP085 message indicates JES2 termination is complete.

The $HASP607 message indicates that you have attempted to withdraw from the system before all JES2 functions are down. See *z/OS JES2 Messages* for an explanation of the return codes.

If the JES2 main task encountered an error, JES2 issues message $HASP088 to describe the error. Message $HASP198 (an informational message) lists the termination options and precedes the $HASP098 message.

The $HASP098 message requests a termination option.

The $HASP552 message informs the operator that JES2 is writing to a checkpoint data set; the JES2 member cannot terminate until the checkpoint write has completed.

The $HASP553 message informs the operator that a $P JES2,ABEND,FORCE command was entered before attempting a $P JES2,ABEND command. You must specify the $P JES2,ABEND command to bring the JES2 member down.

Examples

1

```
$p jes2

$HASP085 JES2 TERMINATION COMPLETE
```

JES2 terminates normally.

2

```
          $pjes2,abend
*         *$HASP095 JES2 CATASTROPHIC ERROR.  CODE = $PJ2
          $HASP088 JES2 ABEND ANALYSIS
 $HASP088 -----------------------------------------------------
 $HASP088 FMID   = HJE7705    LOAD MODULE = HASJES20
 $HASP088 SUBSYS = JES2  z/OS 1.2
 $HASP088 DATE   = 2001.158        TIME   = 11.30.58
 $HASP088 DESC = OPERATOR ISSUED $PJES2, ABEND
 $HASP088  MODULE   MODULE     OFFSET  SERVICE  ROUTINE     EXIT
 $HASP088  NAME     BASE     + OF CALL LEVEL    CALLED       ##
 $HASP088  -------- --------   ------- -------  ----------  ----
 $HASP088  HASPCOMM 00042C00 + 007BC2  NONE    *ERROR $PJ2
 $HASP088 PCE  = COMM     (066663E0)
 $HASP088 R0   = 0004A4AA  00B5D680  00006F5E  00047170
 $HASP088 R4   = 00000000  06666D84  00000004  06666D88
 $HASP088 R8   = 0004A4AA  0004E266  00000000  00007000
 $HASP088 R12  = 00042C50  066663E0  0662A6E8  000C0AC0
 $HASP088 -----------------------------------------------------
*         *$HASP198 REPLY TO $HASP098 WITH ONE OF THE FOLLOWING:
*  END            - STANDARD ABNORMAL END
*  END,DUMP       - END JES2 WITH A DUMP (WITH AN OPTIONAL TITLE)
*  END,NOHOTSTART - ABBREVIATED ABNORMAL END (HOT-START IS AT RISK)
*  SNAP           - RE-DISPLAY $HASP088
*  DUMP           - REQUEST SYSTEM DUMP (WITH AN OPTIONAL TITLE)
*         *08 $HASP098 ENTER TERMINATION OPTION
```

JES2 ends and displays a short dump analysis. Following the analysis, JES2 displays message $HASP198 with termination options from which to choose; JES2 then issues $HASP098 and waits for you to enter a termination option.

3

```
$p jes2,abend,force

$HASP553 $PJES2,ABEND,FORCE COMMAND DENIED.  ISSUE THE $PJES2,
          ABEND COMMAND FIRST
```

JES2 does not terminate because the FORCE parameter has been entered before attempting the $P JES2,ABEND command.

$P Job - Purge a Job

Function

To cancel a job(s) on the specified queue, including purging the job's output, and removing all traces of it from the system. If the job is active, wait for it to complete its current activity, then purge it from the system.

Syntax

```
►►─$P─┬─Job──────┬─┬─nn──────────────────────────────────────────────────►
      ├─JOBQ─────┤ │   └─-─┬─mm─┬─┘
      ├─JQ───────┤ │       └─*──┘
      ├─Stc──────┤ ├─'job'─────────────────────────────────────────────────►
      └─Tsu──────┘ │   ┌──────────────────────────────────────────────┐
                   └─(─▼─┬─nn─┬─┬──────────────────────────────────┬─)─┘
                         └─*──┘ │   ┌─────────────────────────────┐  │
                                │   │                             │  │
                                │   │   ┌─────────────────────────┐ │  │
                                │   │   │                         │ │  │
                                │   │   │   ┌─────────────────────┐ │ │  │
                                │   │   │   │                     │ │ │  │
                                │   │   │   │   ┌─────────────────┐ │ │ │  │
                                │   │   │   │   │                 │ │ │ │  │
                                │   │   │   │   │   ┌─────────────┐ │ │ │ │  │
                                │   │   │   │   │   │             │ │ │ │ │  │
                                │   │   │   │   │   │   ┌─────────┐ │ │ │ │ │  │
                                │   │   │   │   │   │   │         │ │ │ │ │ │  │
                                │   │   │   │   │   │   │   ┌─┬─mm─┬─┘ │ │ │ │  │
                                │   │   │   │   │   │   │   │ └─*──┘   │ │ │ │ │  │
                                │   │   │   │   │   │   │   └──────────┘ │ │ │ │  │
                                │   │   │   │   │   │   └─────────────────┘ │ │ │  │
                                │   │   │   │   │   └─────────────────────┘ │ │  │
                                │   │   │   │   └─────────────────────────┘ │  │
                                │   │   │   └─────────────────────────────┘  │
                                │   │   └─────────────────────────────────┘  │
                                │   └─────────────────────────────────────┘  │
                                ├─job─────────────────────────────────────────┤
                                └─'job'───────────────────────────────────────┘

►─┬──────────────────────────────────────────────────────────────────────────┬─┬──────────────────────────────────────────────────────────────────────────┬─►
  │ ┌─────────────────────────────────────────────────────────────────────┐  │ │ ┌─────────────────────────────────────────────────────────────────────┐  │
  │ │                                                                     │  │ │ │                                                                     │  │
  │ │ ┌─────────────────────────────────────────────────────────────────┐ │  │ │ │ ┌─────────────────────────────────────────────────────────────────┐ │  │
  │ │ │                                                                 │ │  │ │ │ │                                                                 │ │  │
  │ │ │ ┌─────────────────────────────────────────────────────────────┐ │ │  │ │ │ │ ┌─────────────────────────────────────────────────────────────┐ │ │  │
  │ │ │ │                                                             │ │ │  │ │ │ │ │                                                             │ │ │  │
  │ │ │ │ ┌─────────────────────────────────────────────────────────┐ │ │ │  │ │ │ │ │ ┌─────────────────────────────────────────────────────────┐ │ │ │  │
  │ │ │ │ │                                                         │ │ │ │  │ │ │ │ │ │                                                         │ │ │ │  │
  │ │ │ │ │ ┌─────────────────────────────────────────────────────┐ │ │ │ │  │ │ │ │ │ │ ┌─────────────────────────────────────────────────────┐ │ │ │ │  │
  │ │ │ │ │ │                                                     │ │ │ │ │  │ │ │ │ │ │ │                                                     │ │ │ │ │  │
  │ │ │ │ │ │ ┌─────────────────────────────────────────────────┐ │ │ │ │ │  │ │ │ │ │ │ │ ┌─────────────────────────────────────────────────┐ │ │ │ │ │  │
  │ │ │ │ │ │ │                                                 │ │ │ │ │ │  │ │ │ │ │ │ │ │                                                 │ │ │ │ │ │  │
  │ │ │ │ │ │ │ ┌─────────────────────────────────────────────┐ │ │ │ │ │ │  │ │ │ │ │ │ │ │ ┌─────────────────────────────────────────────┐ │ │ │ │ │ │  │
  │ │ │ │ │ │ │ │                                             │ │ │ │ │ │ │  │ │ │ │ │ │ │ │ │                                             │ │ │ │ │ │ │  │
  │ │ │ │ │ │ │ │ ┌─────────────────────────────────────────┐ │ │ │ │ │ │ │  │ │ │ │ │ │ │ │ │ ┌─────────────────────────────────────────┐ │ │ │ │ │ │ │  │
  │ │ │ │ │ │ │ │ │                                         │ │ │ │ │ │ │ │ │  │ │ │ │ │ │ │ │ │ │                                         │ │ │ │ │ │ │ │  │
  │ │ │ │ │ │ │ │ │ ┌─┬─mm─┬─┘ │ │ │ │ │ │ │ │ │ │  │ │ │ │ │ │ │ │ │
```

2 *volume* can be coded up to 253 times

Parameters

job
Specifies 1 to 8 alphanumeric, special ($, #, or @) or wildcard characters (or a combination of them) that can be used to select a subset of jobs whose job name matches this combination of characters (mask).

'job'
The name of the job that is cancelled. This name must appear as coded on the JOB statement and must be enclosed in apostrophes. If more than one job exists with this name, no action is taken.

Job
A batch job or range of batch jobs is to be cancelled.

JOBQ|JQ
Specifies *all* jobs, STCs, and TSUs across the MAS for processing.

Stc
A started task or range of started tasks is to be cancelled.

Tsu
A time-sharing user or range of time-sharing users is to be cancelled.

Age|DAys<days | Age|DAys>days
Specifies the age of affected jobs in days. Only jobs more (with DAYS>nn) or less (with DAYS<nn) than the specified number of days in age are affected, The days are counted from the current hour.

ALL
JES2 cancels all the specified job's job output elements.

Note: This parameter is positional and must immediate follow the jobid (JOB, STC, TSU), JOBQ or 'jobname' (or JOBMASK if coded) parameter.

CMDauth=cmdauth
Only the jobs that can be affected from the specified remote(s) or node(s) will be released. The valid specifications are:

LOCAL|ANYLOCAL
Only the local devices at the local node can affect the output.

Nnnnn|nodename
Only local devices at the specified node can affect the output.

Rnnnn
Only the specified remote device can affect the output.

NnnnnRnnnn|nodename.Rnnnn
Only the specified remote device at the specified remote node can affect the output.

destid
A destid corresponding to any of the above remote devices.

Note: Specification of the CMDAUTH filter does not override the authority of the console from which the command is issued; both the authority of the console and the specified CMDAUTH filter must match for the job to be affected.

H|Hours=hours
Specifies the age of affected jobs in hours. Only jobs more (with HOURS>nn) or less (with HOURS<nn) than the specified number of hours in age are affected.

JM|JOBMASK=jobmask
Specifies 1 to 8 alphanumeric, special ($, #, or @) or wildcard characters (or a combination of them) that can be used to select a subset of jobs whose job name matches this combination of characters (mask). For a description of wildcards, see “Using Wildcards” on page 93.

Notes:

1. This is a positional parameter. Specify this following the job_id (JOB, STC, or TSU) or JOBQ parameter.
2. The JOBMASK parameter is not valid with the *‘jobname ’* parameter.

PROTected
Indicates that **all** specified output groups, including output groups that have been specified ‘protected’, should be purged. The ’protected’ attribute is assigned to programs running in a transactional environment such as APPC or OMVS, where the transaction output is associated with the initiators like ASCHINIT or BPXAS. The ‘protected’ attribute can also be assigned to jobs by JES2 installation exits. APPC output is always protected.

Note: Since the OUTGRP= parameter identifies the output to be cancelled, you do not need to specify PROTECTED with this operand, even for output that is protected.

Queue={CNV|INPUT|OUT|PPU|PURGE|RCV| SETUP|SPIN|XEQ|XMT}
Only jobs on the specified job queue are to be purged.

CNV
Only jobs awaiting conversion are to be cancelled.

INPUT
Only jobs on the JES2 $INPUT queue are to be cancelled.

OUT
Only jobs awaiting output processing are to be cancelled.

PPU
Only jobs awaiting print/punch processing are to be cancelled.

PURGE
Only jobs awaiting purge processing are to be cancelled.

RCV
Only jobs on the JES2 $RECEIVE queue are to be cancelled.

SETUP
Only jobs on the JES2 $SETUP queue are to be cancelled.

SPIN
Only jobs awaiting spin processing are to be cancelled.

XEQ
Only jobs awaiting execution are to be cancelled.

XMT
Only jobs queued for network transmission are to be cancelled.

REBUILD={No|Yes}
Jobs on the rebuild queue are to be cancelled (Yes) or not cancelled (No).

SPL|SPOOL={Percent|%|Tgs|Volumes}
Only jobs with specific SPOOL characteristics are to be cancelled:

Percent|%
Only jobs using more (with %>nn) or less (with %<nn) than the specified percentage of the total available spool space are to be cancelled.

Tgs
Only jobs using more (with Tgs>nn) or less (with Tgs<nn) than the specified number of track groups are to be cancelled.

Volumes=(v1,v2,...)
Only jobs which have allocated spool space on the specified spool volume(s) are to be cancelled.

TYPE={JOB|STC|TSU}
Indicates whether only batch jobs (JOB), started tasks (STC), or time-sharing users (TSU) are to be cancelled.

XEQNode=xeqnode
Only jobs which are destined to execute at the specified node, or which have already executed at the specified node, are to be cancelled. The node name may be specified using the decimal node number (Nnnnnn) or an EBCDIC node name.

Related Commands

To purge a job's output data set, see the $PO Job command.

Authority Required

This command requires **job** authority. The description of the $T RDRnn command explains how to ensure the proper MVS system command group authority is assigned.

This command requires **update** security access authority. For a description of assigning command input authority, see *z/OS JES2 Initialization and Tuning Guide*.

Scope

MAS-Wide. This command has an effect across the entire MAS.

Messages

The $HASP890 message displays the jobs that are to be deleted.

If all output has been purged for a specified job, JES2 issues the $HASP250 message to indicate that the job has been purged.

Examples

1 `$p j'myjob'`

```
JOB00002  $HASP890 JOB(MYJOB)
$HASP890 JOB(MYJOB)     STATUS=(AWAITING EXECUTION),CLASS=A,
$HASP890                PRIORITY=9,SYSAFF=(IBM1),HOLD=(NONE),
$HASP890                PURGE=YES
```

Job MYJOB is purged from the system.

2 `$p jobq,q=ppu,days>2`

```
JOB00002  $HASP890 JOB(MYJOB)
$HASP890 JOB(MYJOB)     STATUS=(AWAITING HARDCOPY),CLASS=A,
```

```
$HASP890                PRIORITY=1,SYSAFF=(IBM1),HOLD=(NONE),
$HASP890                PURGE=YES
TSU00065  $HASP890 JOB(D96CLW1A)
$HASP890 JOB(D96CLW1A)  STATUS=(AWAITING HARDCOPY),CLASS=A,
$HASP890                PRIORITY=1,SYSAFF=(IBM1),HOLD=(NONE),
$HASP890                PURGE=YES
```

All batch jobs, STCs, and TSUs awaiting print that are more than two days old are purged from the system.

3 `$pj9,age<1`

```
JOB00009  $HASP890 JOB(IE)
$HASP890 JOB(IE)        STATUS=(AWAITING PURGE),CLASS=A,
$HASP890                PRIORITY=1,SYSAFF=(ANY),HOLD=(NONE),
$HASP890                PURGE=YES
JOB00009  $HASP250 IE PURGED -- (JOB KEY WAS B3FB7D66)
```

JES2 purges job 9 if age is less than one day.

4 `$pj9-25,/days>1`

```
$HASP003 RC=(52),
$HASP003 RC=(52),J9-25  - NO SELECTABLE ENTRIES FOUND MATCHING
$HASP003         SPECIFICATION
```

JES2 purges jobs 9 thru 25 if days greater than 1.

$P Lnnnn.xxn - Stop an NJE Device

Function

To stop the specified NJE transmitting and/or receiving devices after they complete their current work.

Syntax

```
►►─$P─┬─Lnnnn.JRn─┬─┬──────────────┬─────────────────────────────────────────►◄
      ├─Lnnnn.JTn─┤ │ ,Lnnnn.JRn   │
      ├─Lnnnn.SRn─┤ │ ,Lnnnn.JTn   │
      └─Lnnnn.STn─┘ │ ,Lnnnn.SRn   │
                    └ ,Lnnnn.STn   ┘
```

Parameters

Lnnnn.JRn
The job receiver on line nnnn that is stopped.

Lnnnn.JTn
The job transmitter on line nnnn that is stopped.

Lnnnn.SRn
The SYSOUT receiver on line nnnn that is stopped.

Lnnnn.STn
The SYSOUT transmitter on line nnnn that is stopped.

Authority Required

This command requires **device** authority. The description of the $T RDRnn command explains how to ensure the proper MVS system command group authority is assigned.

This command requires **control** security access authority. For a description of assigning command input authority, see *z/OS JES2 Initialization and Tuning Guide*.

Scope

Single Member. This command will be in effect for this member only. There is no need to have this command issued to all members of the MAS.

Messages

The $HASP000 message indicates the command was accepted.

Upon completion, the $HASP097 message indicates that the device is drained.

Example

1 `$p l3.sr1,l5.jt2`

```
$HASP000 OK
$HASP097 SR1 IS DRAINED
$HASP097 JT2 IS DRAINED
```

JES2 stops SYSOUT receiver 1 on line 3 and job transmitter 2 on line 5 after they complete their current activity.

$P LINE(nnnn) - Stop a Line

Function

To stop an RJE or NJE line after it completes its current activity.

Syntax

```
►►─$P──┬─LINE─┬──┬─nnnn──┬──────────┬──┬──────────────────────────────────────►◄
       └─LNE──┘  │       └─-─┬─nnnn─┬┘  │
                 │           └─*────┘   │
                 │   ┌──────────────────┐│
                 └─(─┴─┬─nnnn─┬─┬──────┬┴─)─┘
                       └─*────┘ └─-─┬─nnnn─┬┘
                                    └─*────┘
```

Parameters

nnnn
The subscript defining the RJE or NJE line(s) that are stopped. The subscript may specify a specific value or a range of values. For information about entering a range of values for this subscript, see “Syntax Conventions” at the front of this chapter.

Authority Required

This command requires **device** authority. The description of the $T RDRnn command explains how to ensure the proper MVS system command group authority is assigned.

This command requires **control** security access authority. For a description of assigning command input authority, see *z/OS JES2 Initialization and Tuning Guide*.

Scope

Single Member. This command will be in effect for this member only. There is no need to have this command issued to all members of the MAS.

Messages

The $HASP880 message displays the current status of the specified lines.

Example

1 `$p line(2-*)`

```
$HASP880 LINE2     UNIT=0023,STATUS=DRAINED
$HASP880 LINE3     UNIT=0024,STATUS=DRAINED
$HASP880 LINE4     UNIT=0025,STATUS=DRAINED
$HASP880 LINE5     UNIT=0026,STATUS=DRAINED
$HASP880 LINE6     UNIT=0027,STATUS=DRAINED
$HASP880 LINE7     UNIT=0021,STATUS=DRAINED
$HASP880 LINE8     UNIT=0020,STATUS=DRAINED/RMT5
    .            .           .
    .            .           .
    .            .           .
$HASP880 LINE24    UNIT=0C45,STATUS=DRAINED
```

JES2 stops all defined lines that are numbered 2 and higher after they complete their current activity.

$P LOGON(nn) - Stop the JES2/VTAM Interface

Function

To stop the JES2/VTAM interface, causing all new logon requests from SNA remote workstations to be rejected.

Syntax

```
►►─$P──┬─LGN────┬──┬─nn──┬──────┬──────────────────────────────────────────►◄
       └─LOGON──┘  │     └─-─┬─mm─┬─┘                                        │
                   │         └─*──┘                                          │
                   │   ┌──────────────────────────────┐                      │
                   │   ▼                              │                      │
                   └─(────┬─nn─┬──┬──────┬──────────┬─────────────────────)──┘
                          └─*──┘  └─-─┬─mm─┬─┘        │
                                      └─*──┘
```

Parameters

(nn|mm|*)
The subscript defining the JES2/VTAM interface(s) that are stopped. You may specify a single interface using the value of n on the LOGON(n) initialization statement that defines that interface. The subscript can also specify a range of values.

Authority Required

This command requires **system** authority. The description of the $T RDRnn command explains how to ensure the proper MVS system command group authority is assigned.

This command requires **control** security access authority. For a description of assigning command input authority, see *z/OS JES2 Initialization and Tuning Guide*.

Processing Considerations

Sessions that are already established on this interface are allowed to finish normally.

Scope

Single Member. This command will be in effect for this member only. There is no need to have this command issued to all members of the MAS.

Messages

The $HASP881 message displays the current status of the specified LOGONs.

Example

1 `$p logon1`

```
$HASP881 LOGON1  APPLID=JESA,STATUS=DRAINED
```

JES2 stops the JES2/VTAM interface identified by LOGON1.

$P O Job - Purge a Job's Output

Function

To cancel a job's output and remove all traces of the output from the system.

Syntax

```
►►──$P O──┬─Job──────┬──┬──────────────────────────────────────────────────────────────────────────────────►
          ├─JOBQ─────┤  │ ┌──────────────────────────────────────────────────────────────────────────────┐
          ├─JQ───────┤  ├─nn──┬──────────┬──────────────────────────────────────────────────────────────┤
          ├─Stc──────┤  │      └─-──┬─mm─┬─┘                                                              │
          └─Tsu──────┘  │            └─*──┘                                                                │
                        ├─'output'──────────────────────────────────────────────────────────────────────┤
                        │ ┌──────────────────────────────────────────────────────────────────────────┐   │
                        │ │                ┌──────────┬──────────┬──────────┬──────────┬──────────┬──┐│   │
                        │ │                │          │          │          │          │          │  │└   │
                        │ │                │          │          │          │          │          │  │    │
                        │ │                │          │          │          │          │          │  │    │
                        │ │                │          │          │          │          │          │  │    
```

'job'
The name of the job that is cancelled. This name must appear as coded on the JOB statement and must be enclosed in apostrophes. If more than one job exists with this name, no action is taken.

Job
A Batch job or range of batch jobs is to be cancelled.

JOBQ|JQ
Specifies *all* jobs, STCs, and TSUs across the MAS for processing.

Stc
A started task or range of started tasks is to be cancelled.

Tsu
A time-sharing user or range of time-sharing users is to be cancelled.

Age|DAys<days | Age|DAys>days
Specifies the age of affected output in days. Only output more (with DAYS>nn) or less (with DAYS<nn) than the specified number of days in age are affected, The days are counted from the current hour.

ALL
JES2 modifies all job output elements belonging to the specified job.

Note: This parameter is positional and must immediate follow the jobid (JOB, STC, TSU), JOBQ or 'jobname' (or JOBMASK if coded) parameter.

Dest|Routecde=routecde
Only those data sets that are to be routed to the specified destination are cancelled. If more than one R= operand is specified, the last one entered is used. For routing specification requirements, see "Route Codes" on page 92.

A variety of filters can be used to select a range of routecdes. For example, R>R1, R<=R10. You can also specify wildcards on this parameter. See "Using Wildcards" on page 93.

If this command originates from another node in the network and the R= operand does not specify a node (first-level destination), the receiving node defaults the first-level destination to the node where the command originated.

If this command is sent to another node in the network using the $N command, be aware that the receiving node will default the node (first-level destination) of the R= operand to the sending node. If another node is desired, specify a destination on the R= operand that will resolve to the desired node (first-level destination) at the receiving node.

Notes:

1. NODENAME=REQUIRED on the DESTDEF initialization statement will cause JES2 to require that a userid be prefixed with a node name.
2. Greater than (> or >=) and less than (< or <=) filters may be used in conjunction to support route code ranges. For example, you could specify the filters R>=R1,R<=R7 to affect output for all remotes in the range R1 to R7, Note that:
   - The destination being filtered upon is converted to its binary equivalent prior to the comparison.
   - Open-ended ranges (for example, a > filter without a < filter, or a < filter without a > filter) are not allowed.
   - When using nodal ranges, a specification of "nodename.*" must be used. Only the nodal routing of the output will be compared.

The valid specifications are:

LOCAL|ANYLOCAL
Indicates that jobs are to be run at the local node.

Nnnnn|nodename
Indicates that jobs are to be run at the specified node(s). You can specify a node using the decimal node identifier or an EBCDIC nodename.

destid Indicates that jobs are to be run at the specified node(s). You can specify this location by an alias for the name of a node. If destid is specified alone, it refers to both the node and the remote.

NnnnnRmmmm|node.remote|node.userid
Indicates routing to the remote Rmmmm at the node Nnnnn. Rmmmm can also be specified as RMmmmm or RMTmmmm.

Ummmm
Indicates special local routing.

node.destid
Indicates a destination at the specified node. The destid refers to both the node and the remote. The node specified in the destid must be the same as the node portion of the route code. If the number of the remote is reassigned, you can use the destid to send to this node.

remote
Indicates routing to a remote. Remote can be specified in any of the following ways:

LOCAL|ANYLOCAL
Indicates that jobs are to be run at the local node.

Rmmmm
Indicates routing to the specified remote. Rmmmm can also be specified as RMmmmm or RMTmmmm.

destid Indicates routing to a destid referring to a remote.

userid Indicates routing to a valid TSO userid. If the userid ends in *, this route code refers to all userids beginning with the characters that precede the *.

Note: Exercise caution when specifying non-local userids that end with *. For example, if you specify NODE2.FRED*, it will cause all output with current route codes NODE2.FREDDY as well as NODE2.FRED* to be purged.

***** Indicates all output for the local node, including special local, userid, and a remote workstation on the local node.

node.*
Displays output for all userids at the local node.

node.*-node.*

HOLD={NONE|OPER|SYS}
Only output groups with the specified hold type (OPER, SYS, or NONE) are to be purged.

HOLDRC
Only output groups with the specified system hold reason code are to be purged (when HOLD=SYS).

Hours=hours
Specifies the age of affected output in hours. Only output more (with HOURS>nn) or less (with HOURS<nn) than the specified number of hours in age are affected.

Held
Only held output is to be purged.

JM|JOBMASK=jobmask
Specifies 1 to 8 alphanumeric, special ($, #, or @) or wildcard characters (or a combination of them) that can be used to select a subset of jobs whose job name matches this combination of characters (mask). For a description of using wildcards, see “Using Wildcards” on page 93.

Notes:

1. This is a positional parameter. Specify this following the job_id (JOB, STC, or TSU), or JOBQ parameter.
2. The JOBMASK parameter is not valid with the *'jobname'* parameter.

OUTGrp=outgrp
The job output element(s) that are cancelled.

grpid
The 1 to 8 character alphameric group ID that is either specified by the user in the JCL or generated by JES2. If you specify only group ID (OUTGRP=grpid) on this command, JES2 cancels all the held job output elements in that group.

joeid1
A number assigned by JES2 to distinguish between job output elements within the output group. If you specify only group ID and the first qualifier (OUTGRP=grpid.joeid1) on this command, JES2 releases or cancels all copies of the specified job output element in that group.

joeid2
A number assigned by JES2 to distinguish between several copies of grpid.joeid1. If you specify group ID and both qualifiers (OUTGRP=grpid.joeid1.joeid2) on this command, JES2 releases or cancels only the specified copy (joeid2) within the job output element (joeid) in that group.

Note: This parameter is positional. If specified, it must immediately follow the jobid (JOB, STC, TSU), JOBQ or 'jobname' (or JOBMASK if coded) parameter.

PAGES
Only output groups with the specified number of pages are to be cancelled.

PROTected
Indicates that **all** specified output groups, including output groups for jobs that have been specified 'protected', should be cancelled. The 'protected' attribute is assigned to programs running in a transactional environment such as APPC or OMVS, where the transaction output is associated with the initiators like ASCHINIT or BPXAS. The 'protected' attribute can also be assigned to jobs by JES2 installation exits. This parameter is only valid when used with the CANCEL parameter.

Queue=queue
The held output in the specified output class(es) (A-Z and 0-9) is cancelled. A maximum of 36 classes may be specified. The Q= keyword and the ALL parameter are mutually exclusive.

READY
Only ready output is to be cancelled.

REBUILD={No|Yes}
Output on the rebuild queue is to be cancelled (Yes) or not cancelled (No).

RECORDS
Only output groups with the specified number of records are to be cancelled.

Authority Required

This command requires **job** authority. The description of the $T RDRnn command explains how to ensure the proper MVS system command group authority is assigned.

This command requires **update** security access authority. For a description of assigning command input authority, see *z/OS JES2 Initialization and Tuning Guide*.

Scope

MAS Wide. This command has an effect across the entire MAS. There is no need to have this command issued to all members of the MAS.

Messages

The $HASP000 message indicates the command was accepted.

Upon completion, JES2 issues the $HASP686 message.

The $HASP686 message is issued for each output group to be cancelled.

Examples

1 `$p o j'fred',outgrp=1.1.1`

```
JOB00012 $HASP686  OUTPUT(FRED)     OUTGRP=1.1.1 CANCELLED
```

JES2 cancels the specified output group.

2 `$p o jq,q=b,r=r1`

```
JOB00012 $HASP686  OUTPUT(FRED)     OUTGRP=1.1.1 CANCELLED
JOB00012 $HASP686  OUTPUT(FRED)     OUTGRP=2.1.1 CANCELLED
JOB00016 $HASP686  OUTPUT(WILMA)    OUTGRP=1.1.1 CANCELLED
JOB00017 $HASP686  OUTPUT(BARNEY)   OUTGRP=6.1.1 CANCELLED
JOB00017 $HASP686  OUTPUT(BARNEY)   OUTGRP=7.1.1 CANCELLED
```

JES2 cancels all class B output destined for remote workstation 1.

3 `$p o jq,r=denver,q=bk`

```
TSU00027 $HASP686  OUTPUT(FRED)     OUTGRP=1.1.1 CANCELLED
TSU00027 $HASP686  OUTPUT(FRED)     OUTGRP=2.1.1 CANCELLED
TSU00027 $HASP686  OUTPUT(FRED)     OUTGRP=3.1.1 CANCELLED
JOB00047 $HASP686  OUTPUT(BARNEY)   OUTGRP=6.1.1 CANCELLED
JOB00047 $HASP686  OUTPUT(BARNEY)   OUTGRP=7.1.1 CANCELLED
```

JES2 cancels all class output in classes B and K destined for DENVER. (DENVER is an installation-defined name, which must equate to one of the valid destination forms.)

4 `$p o jobq,q=c,hours>12,days<1`

```
JOB00041  $HASP686 OUTPUT(IEBGENE1)  OUTGRP=1.1.1 CANCELLED
JOB00042  $HASP686 OUTPUT(IEBGENE1)  OUTGRP=3.1.1 CANCELLED
JOB00042  $HASP686 OUTPUT(IEBGENE1)  OUTGRP=2.1.1 CANCELLED
JOB00042  $HASP686 OUTPUT(IEBGENE1)  OUTGRP=1.1.1 CANCELLED
JOB00043  $HASP686 OUTPUT(IEBGENE1)  OUTGRP=3.1.1 CANCELLED
```

JES2 cancels all class C output that is at least 12 hours old but not more than 1 day old.

5 `$poj11-12,hours>0`

```
JOB00011  $HASP686 OUTPUT(IEBANY)    OUTGRP=1.1.1 CANCELLED
JOB00012  $HASP686 OUTPUT(IEBGENER)  OUTGRP=1.1.1 CANCELLED
JOB00012  $HASP250 IEBGENER PURGED -- (JOB KEY WAS B3FB7D76)
JOB00011  $HASP250 IEBANY PURGED -- (JOB KEY WAS B3FB7D6D)
```

JES2 cancels the specified jobs with hours >0.

6 `$POJOBQ,ALL,PROTECTED,DAYS>7`

```
-DOS8675,LONG
-HASP686 OUTPUT(BPXAS) 481
-HASP686 OUTPUT(BPXAS)     OUTGRP=2.1.1,BURST=NO,FCB=****,
-HASP686                   FLASH=****,FORMS=606,HOLD=(NONE),
-HASP686                   OFFS=(),OUTDISP=HOLD,PRIORITY=144,
-HASP686                   PRMODE=LINE,QUEUE=N,
-HASP686                   RECORDS=(31 OF 31),ROUTECDE=LOCAL,
-HASP686                   SECLABEL=,TSOAVAIL=YES,UCS=****,
-HASP686                   USERID=IBMUSER,WRITER=,REBUILD=NO,
-HASP686                   CRTIME=(2001.221,18:19:46)
```

JES2 cancels all jobs with days>7.

$P OFFn.xx - Stop an Offload Transmitter/Receiver

Function

To stop the specified offload transmitters and/or receivers after they complete their current activity.

Syntax

```
►►──$P──┬─OFFn.JR─┬─┬──────────┬──────────────────────────────────────────►◄
        ├─OFFn.JT─┤ ├─,OFFn.JR─┤
        ├─OFFn.SR─┤ ├─,OFFn.JT─┤
        └─OFFn.ST─┘ ├─,OFFn.SR─┤
                    └─,OFFn.ST─┘
```

Parameters

OFFn.JR
The offload job receiver that is stopped. n is the number (1-8) of the associated offload device.

OFFn.JT
The offload job transmitter that is stopped. n is the number (1-8) of the associated offload device.

OFFn.SR
The offload SYSOUT receiver that is stopped. n is the number (1-8) of the associated offload device.

OFFn.ST
The offload SYSOUT transmitter that is stopped. n is the number (1-8) of the associated offload device.

Authority Required

This command requires **device** authority. The description of the $T RDRnn command explains how to ensure the proper MVS system command group authority is assigned.

This command requires **update** security access authority. For a description of assigning command input authority, see *z/OS JES2 Initialization and Tuning Guide*.

Processing Considerations

- Once the device is stopped, JES2 does not automatically start it when the corresponding offload device (OFFLOADn) is started. You must use the $S command to individually start the device.
- If you stop both receivers while the corresponding offload device is still reloading data, JES2 automatically halts the offload device. To stop the reload operation, issue the $P OFFLOADn command. To continue loading, issue a $S OFFn.xR command and then restart the offload device ($S OFFLOADn).

Scope

Single Member. This command will be in effect for this member only. There is no need to have this command issued to all members of the MAS.

Messages

The $HASP000 message indicates the command was accepted.

Upon completion, JES2 issues the $HASP097 message to indicate the device has been drained.

Example

```
1  $p off2.jt,off4.jt

  $HASP000 OK
  $HASP097 OFF2 IS DRAINED
  $HASP097 OFF4 IS DRAINED
```

JES2 stops the offload job transmitters for offload devices 2 and 4 when they complete their current work.

$P OFFLOADn - Stop an Offload Device

Function

To stop an offload device when it completes its current work and then close and deallocate the offload data set.

Syntax

```
►►──$P──,OFFLOADn──────────────────────────────────────────────────────────►◄
```

Parameters

OFFLOADn
The offload device (1-8) that is stopped.

Authority Required

This command requires **device** authority. The description of the $T RDRnn command explains how to ensure the proper MVS system command group authority is assigned.

This command requires **update** security access authority. For a description of assigning command input authority, see *z/OS JES2 Initialization and Tuning Guide*.

Processing Considerations

- This command causes the associated active transmitters and receivers to stop selecting work.
- If you issue this command for an offload device that has been halted ($Z) during the receive operation, you may need to issue the $S OFFLOADn command to finish reloading the job that was halted, before the device will stop.
- During the receive operation, JES2 automatically stops the offload device when an end-of-file is encountered.

Scope

Single Member. This command will be in effect for this member only. There is no need to have this command issued to all members of the MAS.

Messages

The $HASP000 message indicates the command was accepted.

Upon completion, JES2 issues the $HASP097 message to indicate the device has been drained.

Example

```
1  $p offload2

  $HASP000 OK
  $HASP097 OFFLOAD2 IS DRAINED
```

JES2 stops offload device 2 when it completes its current work and then closes and deallocates the offload data set. The associated transmitters and receivers that are currently active no longer select work.

$P PRTnnnn and $P Rnnnn.PRm - Stop a Printer

Function

To stop a printer after it completes processing the current output group and then free the associated system resources.

Syntax

```
►►──$P──┬─PRTnnnn──────┬──┬──────────────┬──────────────────────────────────────►◄
        └─Rnnnn.PRm────┘  ├─,PRTnnnn─────┤
                          └─,Rnnnn.PRm───┘
```

Parameters

PRTnnnn
The local printer that is stopped.

Rnnnn.PRm
The remote printer that is stopped.

Authority Required

This command requires **device** authority. The description of the $T RDRnn command explains how to ensure the proper MVS system command group authority is assigned.

This command requires **update** security access authority. For a description of assigning command input authority, see *z/OS JES2 Initialization and Tuning Guide*.

Processing Considerations

- If the printer being stopped is a 3800-1, there is always output remaining in the paperline (that is, between the fuser and the stacker) after JES2 has freed the system resources. The operator should issue a non-process runout to stack this output group. (The non-process runout is issued by depressing the following 3800 keys in succession: STOP, NPRO, and READY.)
- If the printer being stopped is a 3800 printer or another channel attached printer operating in FSS mode, the device automatically generates NPRO if it is inactive for a period greater than the NPRO= value on the PRTnnnn statement. However, if NPRO is set to zero, this means that the timer-based NPRO is not to be used, and the operator must issue a non-process runout using the process described above.

Scope

Single Member. This command will be in effect for this member only. There is no need to have this command issued to all members of the MAS.

Messages

Upon completion, JES2 issues the $HASP097 message to indicate the device has been drained.

Example

```
1  $p prt4,prt6,prt8,prt9

  $HASP097 PRT4 IS DRAINED
  $HASP097 PRT6 IS DRAINED
  $HASP097 PRT8 IS DRAINED
  $HASP097 PRT9 IS DRAINED
```

JES2 stops printers 4, 6, 8, and 9 after they complete processing their current work and then frees the associated system resources.

$P PUNnn and $P Rnnnn.PUm - Stop a Punch

Function

To stop a punch after it completes processing the current output group and then free the associated system resources.

Syntax

```
►►──$P──┬─PUNnn─────────┬─┬──────────────┬──────────────────────────────────────►◄
        └─Rnnnn.PUm─────┘ ├─,PUNnn───────┤
                          └─,Rnnnn.PUm───┘
```

Parameters

PUNnn
The local punch that is stopped.

Rnnnn.PUm
The remote punch that is stopped.

Authority Required

This command requires **device** authority. The description of the $T RDRnn command explains how to ensure the proper MVS system command group authority is assigned.

This command requires **update** security access authority. For a description of assigning command input authority, see *z/OS JES2 Initialization and Tuning Guide*.

Scope

Single Member. This command will be in effect for this member only. There is no need to have this command issued to all members of the MAS.

Messages

Upon completion, JES2 issues the $HASP097 message to indicate the device has been drained.

Example

1 `$p pun1`

```
$HASP097 PUN1 IS DRAINED
```

JES2 stops punch 1 after it completes processing the current output group and then frees the associated system resources.

$P RDRnn and $P Rnnnn.RDm - Stop a Reader

Function

To stop a reader after it completes its current work and then free the associated system resources.

Syntax

```
►►──$P──┬─RDRnn────────┬──┬──────────────┬──────────────────────────────────────►◄
        └─Rnnnn.RDm────┘  ├─,RDRnn───────┤
                          └─,Rnnnn.RDm───┘
```

Parameters

RDRnn
The local reader that is stopped.

Rnnnn.RDm
The remote reader that is stopped.

Authority Required

This command requires **device** authority. The description of the $T RDRnn command explains how to ensure the proper MVS system command group authority is assigned.

This command requires **update** security access authority. For a description of assigning command input authority, see *z/OS JES2 Initialization and Tuning Guide*.

Scope

Single Member. This command will be in effect for this member only. There is no need to have this command issued to all members of the MAS.

Messages

The $HASP097 message is issued after the device has drained.

Example

1 `$p rdr1, rdr2, rdr3`

```
$HASP097 RDR1 IS DRAINED
$HASP097 RDR2 IS DRAINED
$HASP097 RDR3 IS DRAINED
```

JES2 stops readers 1, 2, and 3 after they complete their current activity and then frees the associated system resources.

$P RMT(nnnn) - Terminate a Remote Terminal Connection

Function

To terminate the connection of a remote terminal after it completes processing its current work.

Syntax

```
►►──$P──RMT──┬─nnnn──┬──────────┬──┬──────────────────────────────────────────────────────────────────►◄
             │       └─-──┬─nnnn─┬┘  │
             │            └─*────┘   │
             │   ┌──────────────────┐│
             │   ▼                  │
             └──(──┬─nnnn─┬──┬──────┬┴──)──┘
                   └─*────┘  └─-──┬─nnnn─┬┘
                                  └─*────┘
```

Parameters

nnnn|*
The subscript defining the remote terminals that are disconnected. The subscript may specify a specific value or a range of values.

Authority Required

This command requires **device** authority. The description of the $T RDRnn command explains how to ensure the proper MVS system command group authority is assigned.

This command requires **control** security access authority. For a description of assigning command input authority, see *z/OS JES2 Initialization and Tuning Guide*.

Processing Considerations

If the remote terminal is not currently connected, but the operator has issued the $S RMTnnnn command to request its connection, the connection request is cancelled.

Scope

Single Member. This command will be in effect for this member only. There is no need to have this command issued to all members of the MAS.

Messages

The $HASP879 message displays the current status of the specified remote terminals.

Example

1 `$p rmt20`

```
$HASP879 RMT(20)  DEVTYPE=LUTYPE1,STATUS=ACTIVE/LINE16
$HASP210 SESSION LU3770PC LOGGED OFF LINE16
$HASP203 RMT20    DISCONNECTED
```

JES2 disconnects remote terminal 20.

$P SPOOL - Drain a Spool Volume

Function

To drain and delete an entire spool volume by processing all work on the volume and preventing any available space on the volume from being allocated.

Syntax

```
►►──$P──┬─SPL───┬──┬──────────────────────────────────────────────────────────────────────────►
        └─SPOOL─┘  │ volser──┬──────────┬──────────────────────────────────────────────────│
                   │         └─-──┬─volser─┬─┘                                                │
                   │              └─*──────┘                                                  │
                   │ 'volser'──────────────────────────────────────────────────────────────│
                   │ ┌──────────────────────────────────────────────────────────────────┐   │
                   │ │ ┌──────────────────────────────────────────────────────────────┐ │   │
                   │ │ │                                                              ▼ │ │   │
                   │ └─┴─(──┬─volser─┬──┬──────────┬──┬──────────┬──┬──────────┬──)──┘ │   │
                   │        │ *      │  │ -──┬─volser─┬─┘          │  │          │      │   │
                   │        │        │  │    └─*──────┘          │  │          │      │   │
                   │        │        │  │ volser─────────────────┘  │          │      │   │
                   │        │        │  │ 'volser'──────────────────┘          │      │   │
                   │        │        │  │                                      │      │   │
                   │        │        │  │                                      │      │   │
                   │        │        │  │                                      
```

Authority Required

This command requires **system** authority. The description of the $T RDRnn command explains how to ensure the proper MVS system command group authority is assigned.

This command requires **control** security access authority. For a description of assigning command input authority, see *z/OS JES2 Initialization and Tuning Guide*.

Processing Considerations

During the draining process, JES2 moves any spooled messages or JESNEWS to an ACTIVE spool volume.

If a spool failure occurs, the operator should be instructed to issue a $Z SPL command for each volume that is in error. This will prevent JES2 from trying to allocate more space from that volume, and from being selected for work (i.e. conversion, execution, and printing).

If a member wide warm start is done without the volumes that had errors on them, then JES2 message $HASP424, VOLUME NOT MOUNTED, will be issued followed by JES2 message $HASP853, REPLY GO, QUIT, or PURGE. If the volume is thought to be recoverable at some time, reply GO. This will cause the volume to come up in an inactive state. The jobs that have space allocated from this volume will not be available for work. JES2 will not attempt to use any space from the volume until a $S SPL command is used.

If the volume is permanently damaged, reply PURGE to this message. Reply PURGE only if you are absolutely certain that all volumes cannot be recovered. Replying PURGE will cause all jobs with space allocated from that volume to be purged. No messages or warnings will be issued indicating that this happened.

You can use the FENCE parameter on the SPOOLDEF initialization statement to define the spooling environment by controlling the partitioning of the spool volumes. This can be a safeguard against spool failure. You use the FENCE parameter to tell JES2 how to partition spool volumes when performing I/O operations. If fencing is turned off, then jobs that have already obtained some spool space when fencing was active will not be fenced. The syntax of the FENCE= keyword is changed to FENCE=(ACTIVE=YES,VOLUMES=nnn) to indicate that all space that a job requires will be allocated from ″nnn″ volumes.
(FENCE=(ACTIVE=YES,VOLUMES=1) is equivalent to FENCE=YES in prior releases.) These volumes are determined by JES2 as the first available volume from which this job can allocate space.

Although, FENCE=(ACTIVE=YES,VOLUMES=nnn) indicates that JES2 will fence to nnn volumes in most cases. However, more than nnn volumes may be used in certain situations (when spool volumes fill or if the job obtains spool space on different systems as it goes through different phases.) JES2 will allocate space from a subsequent volume(s) when, and if, the ″nnn″ becomes full. Refer to the FENCE= parameter on the SPOOLDEF statement in *z/OS JES2 Initialization and Tuning Reference* for how to use this parameter. You may also set the FENCE= parameter using the $T SPOOLDEF command.

JES2 exits 11 and 12 can be used as an alternative method for limiting the volumes from which a job may allocate space.

Scope

MAS-Wide. This command has an effect across the entire MAS.

Messages

If the volume already has a status of DRAINING, JES2 issues the $HASP893 message indicating the status of the volume.

When all work on the volume is completed and the volume is deallocated, the $HASP806 message notifies the member on which this command is entered that the volume is drained.

Examples

1 `$pspl(spool1)`

```
$HASP893 VOLUME(SPOOL1)  STATUS=ACTIVE,COMMAND=(DRAIN)
$HASP646 39.4285 PERCENT SPOOL UTILIZATION
```

JES2 drains spool volume SPOOL1 (which is currently active).

2 `$pspl(spool2),cancel`

```
$HASP893 VOLUME(SPOOL2)  STATUS=ACTIVE,COMMAND=(DRAIN)
$HASP646 33.3333 PERCENT SPOOL UTILIZATION
```

JES2 cancels all work that can be cancelled on SPOOL2 and then drains the spool volume.

$P TRace - Stop a Trace ID

Function

To deactivate the specified trace identifier(s).

Syntax

```
►►──$P──TRace──┬──nnn──┬──────────┬──┬──────────────────────────────────────────►◄
               │       └──-──┬─nnn─┬┘  │
               │             └─*───┘   │
               │   ┌──────────────────┐│
               │   ▼                  │
               └──(──┬─nnn─┬──┬──────┬─┴──)──┘
                     └─*───┘  └──-──┬─nnn─┬┘
                                    └─*───┘
```

Parameters

nnn|*

The subscript defining the trace ID(s) that are deactivated. The subscript may specify a specific trace identifier or a range of trace identifiers.

Trace Identifiers 1-31 have specific meanings that are described in *z/OS JES2 Diagnosis*. Trace identifiers 32-255 are available for customer use.

Authority Required

This command requires **system** authority. The description of the $T RDRnn command explains how to ensure the proper MVS system command group authority is assigned.

This command requires **control** security access authority. For a description of assigning command input authority, see *z/OS JES2 Initialization and Tuning Guide*.

Scope

Single Member. This command will be in effect for this member only.

However, you might want this command to be applied to all members of the MAS (to ensure a consistent environment across the MAS). If so, you can use the MVS ROUTE *ALL command to issue this command to all active members (if the JES2 command character is the same on all members). See *z/OS MVS System Commands* for more information on using the ROUTE *ALL command.

Messages

The $HASP667 message displays the current status of the specified trace identifier.

Example

1 `$ptrace(1)`

```
$HASP667 TRACE(1)   START=NO
```

JES2 deactivates trace(1).

$P XEQ - Prevents JES2 and WLM-Controlled Initiators from Work

Function

To prevent JES2 and WLM-controlled initiators from selecting work.

Syntax

```
►►──$P──XEQ──────────────────────────────────────────────────────────►◄
```

Authority Required

This command requires **system** authority. The description of the $T RDRnn command explains how to ensure the proper MVS system command group authority is assigned.

This command requires **control** security access authority. For a description of assigning command input authority, see *z/OS JES2 Initialization and Tuning Guide*.

Processing Considerations

$P XEQ stops all JES2 and WLM initiators from selecting new work. Message HASP222 is displayed while JES2 is in this state. The $S JOB command will continue to run WLM-managed jobs even if a $P XEQ was previously issued.

The $DMEMBER command will tell you if a $PXEQ is in effect.

Scope

Single Member. The values will be in effect for this member only.

Messages

The $HASP000 message indicates the command has been accepted.

The $HASP222 message indicates that no jobs will be selected for execution on this member until a $S XEQ command is issued.

Example

1 `$p xeq`

```
$HASP000 OK
*$HASP222 XEQ DRAINING
```

JES2 and WLM initiators may not select jobs from the JES2 job queue.

$R - Route Job Output

Function

To reroute SYSOUT that is on the output queue. This affects both ready and held SYSOUT.

One or more parameters on this command accepts wildcards. Parameter descriptions will note that.

Syntax

```
►►─$R──┬─ALL(,Q=C1(...C36))─┬──,J=──┬──────────────┬──,R=──┬──────────────────────┬──,D=──┬─LOCAL|ANYLOCAL─┬──────►
       ├─PRT──────────────┤       ├─J|JOBn─────┤       ├─LOCAL|ANYLOCAL─┤       ├─Nnnnn|nodename─┤
       └─PUN──────────────┘       ├─S|STCn─────┤       ├─Nnnnn|nodename─┤       ├─destid─────────┤
                                  ├─T|TSUn─────┤       ├─destid─────────┤       ├─NnnnnRmmmm─────┤
                                  └─'jobname'──┘       ├─NnnnnRmmmm─────┤       ├─Ummmm──────────┤
                                                       ├─Ummmm──────────┤       ├─node.remote─────┤
                                                       ├─node.remote────┤       ├─node.destid─────┤
                                                       ├─node.destid────┤       ├─node.*──────────┤
                                                       ├─node.*─────────┤       ├─*──────────────┤
                                                       ├─*──────────────┤       ├─remote─────────┤
                                                       ├─remote─────────┤       └─userid─────────┘
                                                       └─userid─────────┘

►──┬──────────────────────────────────────────────────────────────────────────────────────────────────────────────►◄
   └─,OUTDisp=(outdisp,...)─┘
```

Parameters

ALL
Specifies both print and punch output that is rerouted.

PRT
Specifies **print** output that is rerouted.

PUN
Specifies **punch** output that is rerouted.

Q=c1[...c36]
Specifies the class(es) (A-Z and 0-9) of output that is rerouted. You can specify a maximum of thirty-six classes. This parameter is valid only when ALL is specified.

J= Specifies jobs for which output is rerouted.

J|JOBn
Specifies the batch job for which output is rerouted.

S|STCn
Specifies the started task for which output is rerouted.

T|TSUn
Specifies the time-sharing user for which output is rerouted.

'jobname'
Specifies the name of the job for which output is rerouted. The name must appear as coded on the JOB statement and must be enclosed in apostrophes. If more than one job exists with this name, no action is taken.

Note: If you do not code ALL,Q= or OUTDISP= with the J= parameter (in conjunction with the D= parameter), both the routing for that job's output and the command authority are transferred.

R=

Specifies the current destination for output that is rerouted. For routing specification requirements, see "Route Codes" on page 92.

You can also specify wildcards on this parameter. See "Using Wildcards" on page 93 for additional information. For specification requirements, see "Route Codes" on page 92.

If this command originates from another node in the network and the R= operand does not specify a node (first-level destination), the receiving node defaults the first-level destination to the node where the command originated.

If this command is sent to another node in the network using the $N command, be aware that the receiving node will default the node (first-level destination) of the R= operand to the sending node. If another node is desired, specify a destination on the R= operand that will resolve to the desired node (first-level destination) at the receiving node.

LOCAL|ANYLOCAL
Indicates that jobs are routed to the local node.

Nnnnn|nodename
Indicates that jobs are routed to the specified node(s). You can specify a node using the decimal node identifier or an EBCDIC nodename.

destid
Indicates that jobs are routed to the specified node(s). You can specify this location by an alias for the name of a node. If destid is specified alone, it refers to both the node and the remote.

NnnnnRmmmm|node.remote
Indicates routing to the remote Rmmmm at the node Nnnnn. Rmmmm can also be specified as RMmmmm or RMTmmmm.

Ummmm
Indicates special local routing.

node.destid
Indicates a destination at the specified node. The destid refers to both the node and the remote. The node specified in the destid must be the same as the node portion of the route code. If the number of the remote is reassigned, you can use the destid to send to this node.

node.*
Indicates that all output destined for the specified node, including userids, special local, remotes, and destids, is rerouted.

***** Indicates that all output for the local node, including special local, userid, and a remote workstation are on the local node.

remote
Indicates routing to a remote. Remote can be specified in any of the following ways:

LOCAL|ANYLOCAL
Indicates that jobs are to be run at the local node.

Rmmmm
Indicates routing to the specified remote. Rmmmm can also be specified as RMmmmm or RMTmmmm.

destid Indicates routing to a destid referring to a remote.

userid Indicates that output is destined to a valid TSO userid. If the userid ends in *, all output with userids beginning with any characters that precede the * will be rerouted. See “Route Codes” on page 92 for a description of how to specify a userid.

Notes:

1. NODENAME=REQUIRED on the DESTDEF initialization statement will cause JES2 to require that a userid be prefixed with a node name.
2. If you do not code ALL,Q= or OUTDISP= with the R= parameter (in conjunction with the D= parameter), both the routing for that job’s output and the command authority are transferred.

D=

Specifies the new destination to which currently existing output is routed. This does not apply to output groups not yet created.

If this command originates from another node in the network and the D= operand does not specify a node (first-level destination), the receiving node defaults the first-level destination to the node where the command originated.

If this command is sent to another node in the network using the $N command, be aware that the receiving node will default the node (first-level destination) of the D= operand to the sending node. If another node is desired, specify a destination on the D= operand that will resolve to the desired node (first-level destination) at the receiving node.

***** Indicates that all output for the local node, including special local, userid, and a remote workstation are on the local node.

For valid specifications, see the list for the R= parameter.

Notes:

1. NODENAME=REQUIRED on the DESTDEF initialization statement will cause JES2 to require that a userid be prefixed with a node name.
2. If an output group is interrupted while printing and the destination is changed, the output group will begin printing from the top when it is printed at the new destination.

OUTDisp=outdisp

Specifies the disposition of output to be rerouted. The valid output dispositions are **W|WRITE**, **H|HOLD**, **K|KEEP**, and **L|LEAVE**. You can specify as many as four dispositions.

Note: If you do not specify this parameter, all output with a disposition of WRITE, HOLD, KEEP, or LEAVE will be rerouted.

For further information about this parameter, see Processing Considerations in this command.

Authority Required

This command requires **job** authority. The description of the $T RDRnn command explains how to ensure the proper MVS system command group authority is assigned.

This command requires **update** security access authority. For a description of assigning command input authority, see *z/OS JES2 Initialization and Tuning Guide*.

Processing Considerations

- The $R command changes a job's output. This command does not apply to jobs on the input, SYSOUT receiver, or purge queue since output has not been created. It will change only the destination of data sets that have already been spun for a job in execution. The remote(s) or node(s) that can issue commands that affect this job will be updated by the $R command unless:
  - You specify the Q= or the OUTDisp= parameter
  - If you specify the R= parameter and it does not match the job's current command authority.
- If you enter this command and the job output element is being processed, wait and reissue the command again.
- All output (held and non-held) will be sent to the new network destination as soon as the $R command has been processed.

Scope

MAS-Wide. This command has an effect across the entire MAS.

Messages

The $HASP000 message indicates the command was accepted.

Examples

1
```
$r all,j=j3,d=r6
```

```
$HASP000 OK
```

JES2 reroutes output for batch job 3 to remote workstation 6 off the local node. JES2 transfers the job's default routing to remote workstation 6. Refer to Processing Considerations above for more details.

2
```
$r all,r=r3,d=r6
```

```
$HASP000 OK
```

JES2 reroutes output for remote workstation 3 to remote workstation 6 off the local node. If the job's default print and/or punch is remote workstation 3, JES2 transfers the job's default print and/or punch routing to remote workstation 6. Refer to Processing Considerations above for more details.

3
```
$r all,r=r6,d=n3r1,q=a
```

```
$HASP000 OK
```

JES2 reroutes all class A routed output destined for remote workstation 6 to node 3 remote workstation 1. The job's command authority is unchanged.

4
```
$r all,r=local,outdisp=(w,k),d=n2
```

```
$HASP000 OK
```

JES2 reroutes all ready local output to node 2. The job's command authority is unchanged.

5
```
$r all,j=j894,outd=(h,l),d=r3
```

```
$HASP000 OK
```

JES2 reroutes all held output for job number 894 to remote 3. The job's command authority is unchanged.

```
6  $r all,r=n3.*,d=n5.*

$HASP000 OK
```

JES2 reroutes all output for node N3 to node N5. At N5, the output retains the original remote specification.

```
7  $r all,r=n3,d=n5

$HASP000 OK
```

JES2 reroutes all local output for node N3 to node N5. At N5, the output will be LOCAL.

```
8  $r all,r=n3.*,d=n5r6

$HASP000 OK
```

JES2 reroutes all output for node N3 to node 5, remote workstation 6.

$R XEQ - Route Specific Jobs for Execution

Function

To route the specified job(s) to another node for execution.

Syntax

```
►►──$R──XEQ──,J=──┬──────────────┬──,R=──┬──────────────────┬──,D=──┬─LOCAL│ANYLOCAL─┬──────────────►◄
                  ├─J│JOBn───────┤       ├─LOCAL│ANYLOCAL─┤       ├─Nnnnn│nodename─┤
                  └─'jobname'────┘       ├─Nnnnn│nodename─┤       └─destid──────────┘
                                         └─destid────────┘
```

Parameters

D=
The new execution node for the specified job(s). All specifications for the R= parameter are valid.

J=J|JOBn|'jobname'
The job ID (Jn) or name ('jobname') of the **batch job** that is routed for execution. If you specify 'jobname', it must appear as coded on the JOB statement and must be enclosed in apostrophes. If more than one job exists with this name, no action is taken.

R=
All jobs in the system that are supposed to execute on the specified node are routed to the node specified in the D= parameter for execution.

The following specifications are valid:

LOCAL|ANYLOCAL
Indicates that only jobs routed to the local node for execution can be selected.

Nnnnn|nodename
Indicates that only jobs routed to the specified location through a decimal node identifier from 1 to 32767 or an EBCDIC nodename can be selected for execution.

destid Indicates that only jobs routed to the specified location through an alias for the name of a node can be selected for execution.

XEQ
JES2 routes the specified job(s) to the D= location for execution.

Authority Required

This command requires **job** authority. The description of the $T RDRnn command explains how to ensure the proper MVS system command group authority is assigned.

This command requires **update** security access authority. For a description of assigning command input authority, see *z/OS JES2 Initialization and Tuning Guide*.

Processing Considerations

- To be routed by this command, a job must be owned by the input console and must be on the queue awaiting either conversion, execution, or transmission to another node.

- You cannot route remote message data sets, a special type of STC, with the $R command.

Scope

MAS-Wide. This command has an effect across the entire MAS.

Messages

The $HASP000 message indicates the command was accepted.

Examples

1
```
$r xeq,j='myjob',d=denver

$HASP000 OK
```

JES2 routes the job named MYJOB to the node named DENVER for execution.

2
```
$r xeq,r=n3,d=n4

$HASP000 OK
```

JES2 routes all jobs in the local system currently scheduled to execute on node 3 to node 4 for execution.

$S - Start System Activity

Function

To start system activity.

Syntax

```
►►──$S──────────────────────────────────────────────────────────►◄
```

Authority Required

This command requires **system** authority. The description of the $T RDRnn command explains how to ensure the proper MVS system command group authority is assigned. The $T RDI command sets the command authority for internal readers.

This command requires **control** security access authority. For a description of assigning command input authority, see *z/OS JES2 Initialization and Tuning Guide*.

Scope

Single Member. This command will be in effect for this member only.

Depending on your installation's setup, however, you might want this command to be applied to all members of the MAS (to ensure a consistent environment across the MAS). If so, you can use the MVS ROUTE *ALL command to issue this command to all active members (if the JES2 command character is the same on all members). See *z/OS MVS System Commands* for more information on using the ROUTE *ALL command.

Messages

The $HASP000 message indicates the command was accepted.

Example

```
1  $s

  $HASP000 OK
```

JES2 starts processing jobs.

$S A - Start Automatic Command Processing

Function

To start automatic command processing.

Syntax

```
►►──$S──A, ALL──────────────────────────────────────────────────────────►◄
```

Parameters

ALL
JES2 starts processing any commands that were specified for automatic processing with the $T A command.

Authority Required

This command requires **system** authority. The description of the $T RDRnn command explains how to ensure the proper MVS system command group authority is assigned.

This command requires **control** security access authority. For a description of assigning command input authority, see *z/OS JES2 Initialization and Tuning Guide*.

Scope

Single Member. This command will be in effect for this member only.

Depending on your installation's setup, however, you might want this command to be applied to all members of the MAS (to ensure a consistent environment across the MAS). If so, you can use the MVS ROUTE *ALL command to issue this command to all active members (if the JES2 command character is the same on all members). See *z/OS MVS System Commands* for more information on using the ROUTE *ALL command.

Messages

The $HASP000 message indicates the command was accepted.

Example

```
1  $s a,all

  $HASP000 OK
```

JES2 begins processing any commands that were specified for automatic processing with the $T A command.

$S I[vvvv] - Start an Initiator

Function

To start one or more initiators.

Syntax

```
►►──$S──┬─I────┬──┬──────────────────────────────────────────────────────────────────────────►
        └─Init─┘  │ ┌──────────────────────────────────────────────────────────────────────┐
                  ├─nn──┬──────────┬──┬──────────────────────────────────────────────────┤
                  │     └─-──┬─mm─┬─┘  │ ┌──────────────────────────────────────────────┐
                  │          └─*──┘    │ │                                              │
                  ├─'init'─────────────┤ │ └─,──┬──────┬──ASID──┬──────┬──asid──┬──────┬─┘
                  │                    │ │      └─/────┘        ├─=────┤        ├─^=───┤
                  │ ┌──────────────────┐ │                      ├─>────┤        ├─>────┤
                  │ │                  │ │                      └─<────┘        └─<────┘
                  │ ▼                  │ │
                  └─(──┬─nn─┬──┬─────┬──┬─)─┘
                       │ *  │  └─-─┬─mm─┬─┘
                       │    │      └─*──┘
                       ├─init──────────┤
                       └─'init'────────┘

►──┬──────────────────────────────────────────────────────────────────────────────────────────┬──────────────────────────────────────────────────────────────────────────────────────────────────────────────────────────────────────────────────────────────►◄
   │ ┌──────────────────────────────────────────────────────────────────────────────────────┐ │
   └─,──┬──────┬──STATUS──┬──────┬──┬─ACTIVE───────┬──┬──────────────────────────────────────┬─┘
        └─/────┘          └─^=───┘  ├─DRAINED──────┤  │ ┌──────────────────────────────────┐ │
                                    ├─DRAINING─────┤  │ │                                  │ │
                                    ├─HALTED───────┤  └─,──┬──────┬──STC──┬──────┬──stc──┬──────┬─┘
                                    ├─HALTING──────┤     └─/────┘        ├─=────┤       ├─^=───┤
                                    ├─INACTIVE─────┤                     ├─>────┤       ├─>────┤
                                    ├─RESTARTING───┤                     └─<────┘       └─<────┘
                                    └─STARTING─────┘
```

Parameters

ASID=asid
The initiator associated with the specific address space is to be started.

I[init[-init]]
Specifies the subscript (1-9999) of the initiator(s) that are started. If you omit the initiator identification (vvvv), JES2 starts only those initiators stopped by a prior $Z I or $P I command that also did not specify an identifier. For example, note that if initiator 1 was stopped with the $P I1 command and is later to be restarted, you must issue $S I1; issuing $S I will return message $HASP000 OK, but initiator 1 is **not** restarted. For information about naming initiators, see *z/OS JES2 Initialization and Tuning Reference*.

STATUS[=ACTIVE|DRAINED|DRAINING|HALTED|HALTING |INACTIVE|RESTARTING|STARTING}
Initiators in the specified state are to be started. The following types of status can be displayed:

Type	Meaning
ACTIVE	A job is active on the initiator
DRAINED	The initiator is drained
DRAINING	The initiator is transitioning to a DRAINED state
HALTED	The initiator has been halted by the $Z I command
HALTING	The initiator is transitioning to a HALTED state
INACTIVE	The initiator has been started but has not selected a job

RESTARTING The initiator has terminated abnormally and is in the process of restarting automatically

STARTING The initiator has been started but has not fully initialized yet

STC=stc
The initiator associated with the specific STC that is to be started.

Authority Required

This command requires **system** authority. The description of the $T RDRnn command explains how to ensure the proper MVS system command group authority is assigned.

This command requires **control** security access authority. For a description of assigning command input authority, see *z/OS JES2 Initialization and Tuning Guide*.

Scope

Single Member. This command will be in effect for this member only. There is no need to have this command issued to all members of the MAS.

Messages

The $HASP892 message indicates the command was accepted.

When the initiator starts processing a job from the job classes assigned to it, JES2 issues the $HASP373 message.

Example

```
1  $s i3

  $HASP892 INIT(3)    STATUS=STARTING,CLASS=ABC,NAME=3
```

Initiator 3 (X'404040F3') begins processing jobs from the job classes assigned to it.

$S Job - Initiate a Batch Job into Execution

Function

Initiates a batch job into a WLM-managed job class execution.

Use this command to initiate a job immediately instead of letting it wait on the execution queue for normal selection by an initiator.

Syntax

```
►►─$S─Job──┬─nn──────────┬──────────────────────────────────────────►◄
           ├─'job'───────┤
           └─(─┬─nn────┬─)─┘
               ├─job───┤
               └─'job'─┘
```

Parameters

job
Specifies 1 to 8 alphanumeric, special ($, #, or @) or wildcard characters (or a combination of them) that can be used to select a subset of jobs whose job name matches this combination of characters (mask). For a description of wildcards, see “Using Wildcards” on page 93.

‘job’
The name of the job that is to be started. This name must appear as coded on the JOB statement and must be enclosed in apostrophes. If more than one job exists with this name, no action is taken.

nn A Batch job or range of batch jobs is to be started.

Authority Required

This command requires **job** authority. The description of the $T RDRnn command explains how to ensure the proper MVS system command group authority is assigned.

This command requires **update** security access authority. For a description of assigning command input authority, see *z/OS JES2 Initialization and Tuning Guide*.

Processing Considerations

The following must all be true for a job to be started by the $S J command:

1. WLM must be active in GOAL mode;
2. The JOBCLASS associated with this job must be MODE=WLM,
3. The job must have affinity to an active member which has not issued a $P or $P XEQ command and is a ″boss″ JES2 (which can start WLM initiators)
4. The scheduling environment for the job, if any, must be available.
5. The jobname is not be a duplicate of a job currently in execution (unless DUPL_JOB=NODELAY was specified on the JOBDEF initialization statement).

If all of these conditions are met, WLM initiates the job on a system where the job is eligible to run.

Note: If many jobs are initiated into execution with the $S J command in a short interval (for example, 1 minute), WLM may initiate them on the same system instead of distributing them to multiple systems.

Scope

MAS-Wide. This command has an effect across the entire MAS.

Messages

The $HASP890 message is issued to indicate that the job can be started.

The $HASP003 message is issued if no jobs are found in the specified range that are eligible to be started.

Example

1 `$s j5`

```
JOB00005  $HASP890 JOB(STARTJOB)
$HASP890 JOB(STARTJOB)  STATUS=(AWAITING EXECUTION),CLASS=A,
$HASP890                PRIORITY=1,SYSAFF=(IBM1),HOLD=(NONE)
```

Job 5 (STARTJOB) is initiated into execution.

$S Lnnnn.xxn - Start an NJE Device

Function

To start one or more currently drained NJE transmitting and/or receiving devices.

Syntax

```
►►─$S─┬─Lnnnn.JRn─┬─┬──────────────┬─────────────────────────────────────►◄
      ├─Lnnnn.JTn─┤ │ ,Lnnnn.JRn   │
      ├─Lnnnn.SRn─┤ ├─,Lnnnn.JTn   ┤
      └─Lnnnn.STn─┘ ├─,Lnnnn.SRn   ┤
                    └─,Lnnnn.STn   ┘
```

Parameters

Lnnnn.JRn
The job receiver on line nnnn that is started.

Lnnnn.JTn
The job transmitter on line nnnn that is started.

Lnnnn.SRn
The SYSOUT receiver on line nnnn that is started.

Lnnnn.STn
The SYSOUT transmitter on line nnnn that is started.

Authority Required

This command requires **device** authority. The description of the $T RDRnn command explains how to ensure the proper MVS system command group authority is assigned.

This command requires **control** security access authority. For a description of assigning command input authority, see *z/OS JES2 Initialization and Tuning Guide*.

Processing Considerations

If a transmitter attempts to send a unit of work to a receiving node that has (1) the corresponding receiver drained, (2) the corresponding receiving function drained, or (3) no corresponding receiver, the transmitter will drain. To activate the receiving function, the operator at the receiving end (except for case 3) should start the function ($T NODE,RECEIVE=) or receiver ($S) before the operator at the transmitting end attempts to start the transmitter.

Scope

Single Member. This command will be in effect for this member only. There is no need to have this command issued to all members of the MAS.

Messages

The $HASP000 message indicates the command was accepted.

If there is work for the line to transmit, JES2 issues the $HASP520 message indicating the job transmitter has begun transmitting the indicated job to another node for execution.

Example

```
1  $s l1.jt1

  $HASP000 OK
  JOB00015 $HASP520 YOURJOB ON JT1
```

JES2 starts job transmitter 1 on line 1. If any jobs are waiting for transmission over that line, the job transmitter selects a job and begins transmitting.

$S LINE(nnnn) - Start a Line

Function

To start the specified RJE or NJE lines.

Syntax

```
►►─$S──┬─LINE─┬──┬─nnnn──┬──────────┬──┬──────────────────────────────────────►◄
       └─LNE──┘  │       └─-─┬─nnnn─┬─┘  │
                 │           └─*────┘    │
                 │   ┌──────────────────┐│
                 │   ▼                  │
                 └─(─┬─nnnn─┬──┬──────┬─┴─)─┘
                     └─*────┘  └─-─┬─nnnn─┬─┘
                                   └─*────┘
```

Parameters

nnnn|*
The subscript defining the RJE or NJE lines that are started. The subscript may specify a specific value or a range of values.

Authority Required

This command requires **device** authority. The description of the $T RDRnn command explains how to ensure the proper MVS system command group authority is assigned.

This command requires **control** security access authority. For a description of assigning command input authority, see *z/OS JES2 Initialization and Tuning Guide*.

Processing Considerations

- To start a line for a SNA remote workstation, you must know how the system programmer defined your RJE network (the terminals and lines) in the JES2 initialization procedure; that is, you must know which workstations can use which lines. Ask the system programmer for this information.
- JES2 cannot be withdrawn from the system until all lines are drained (see the $P LINE(nnnn) command).

Scope

Single Member. This command will be in effect for this member only. There is no need to have this command issued to all members of the MAS.

Messages

The $HASP880 message displays the current status of the specified line(s).

The $HASP626 message indicates that the unit device has not been specified or is invalid.

The $HASP627 message indicates that the unit device has been specified, but is unavailable.

Example

1 `$s line(1-2)`

```
$HASP880 LINE1  UNIT=0C14,STATUS=INACTIVE
$HASP880 LINE2  UNIT=SNA,STATUS=INACTIVE
```

JES2 starts lines 1 and 2, if they are not already started.

$S LOGON - Start the JES2/VTAM Interface

Function

To start the JES2/VTAM interface which enables JES2 to begin processing connection requests from SNA remote workstations.

Syntax

```
►►─$S─┬─LGN──────┬─┬─nn─┬──────────┬─┬──────────────────────────────────────►◄
      └─LOGON────┘ │    └──┬─nn─┬─┘ │
                   │       └─*──┘   │
                   │   ┌──────────┐ │
                   │   ▼          │ │
                   └─(────┬─nn─┬──┬─┴─┬─nn─┬──────────┬─)─┘
                          └─*──┘  │   └─*──┘
                                  └─────────┘
```

Parameters

nn|*

The subscript defining the JES2/VTAM interface(s) that are started. You may specify a single interface using the value of n on the LOGON(n) initialization statement that defines that interface. The subscript can also specify a range of values.

Authority Required

This command requires **system** authority. The description of the $T RDRnn command explains how to ensure the proper MVS system command group authority is assigned.

This command requires **control** security access authority. For a description of assigning command input authority, see *z/OS JES2 Initialization and Tuning Guide*.

Processing Considerations

Before you can start the JES2/VTAM interface, VTAM must be started and the network must be activated. The network consists of both the network controllers or communication links needed to establish a path to the remote workstation and the physical unit and logical unit associated with the workstation. The network is activated with the VTAM VARY command or automatically if specified in the VTAM network definition.

For information on starting VTAM and activating the network, refer to *z/OS Communications Server: SNA Operation*.

Scope

Single Member. This command will be in effect for this member only. There is no need to have this command issued to all members of the MAS.

Messages

The $HASP091 message indicates the access control block (ACB) for LOGON(n) opened successfully and the $HASP881 message displays the current status of LOGON(n).

Example

1 `$s logon1`

```
$HASP091 LOGON1 IS ACTIVE
$HASP881 LOGON1  APPLID=JESA,STATUS=INACTIVE
```

JES2 starts the JES2/VTAM interface with the identifier 1, making it available to process connection requests from SNA remote workstations.

$S N - Start Node Communication on a BSC Line

Function

To establish an NJE connection with an adjacent node.

Syntax

```
►►──$S──N──┬──────────────┬──┬──────────────┬──┬──────────────────┬──────────────────────────────►◄
           └,LINEnnnn─────┘  └,P=password───┘  └,N=nodename───────┘
```

Parameters

N Identifies this as a start networking command.

LINEnnnn
The BSC line with which this system tries to establish an NJE connection. The system attempts to sign on to the system at the other end of the specified line by sending an NJE sign-on record over the line.

Notes:

1. If the line is currently signed on for RJE or NJE activity, this command is rejected.
2. Before starting networking on a line that is not dedicated, it is necessary that the line be started from both nodes using a $S LINE(nnnn) command.
3. To enter the password used previously, specify the $S,LINE command.
4. If a dedicated line exists but is drained, it will automatically be started and a connection will be attempted by the $S N,N= command.

P=password
The password (1 to 8 alphameric characters) used to verify the identity of the node attempting to establish the NJE connection. This password is transmitted in the sign-on record resulting from this command.

If you omit this parameter:

- The password specified by the PASSWORD=(SEND=) parameter on the NODE initialization statement (for the node to which JES2 is trying to connect) is used if you specify that nodename on the N= parameter of this command.
- If there is no password specified by the PASSWORD=(SEND=) parameter, the PASSWORD=(VERIFY=) parameter on the NODE initialization statement (for the local node) is used.
- If there is no SEND= or VERIFY= password, no password is used.

N=nodename
The 1 to 8 alphanumeric or special ($, #, or @) character name of the node through which you can begin networking.

Authority Required

This command requires **system** authority. The description of the $T RDRnn command explains how to ensure the proper MVS system command group authority is assigned. $T NODE(nnnn) sets the command authority for a node.

This command requires **control** security access authority. For a description of assigning command input authority, see *z/OS JES2 Initialization and Tuning Guide*.

Processing Considerations

- If the $S N command is unsuccessful, enter a $D U command to ensure that the BSC line is started. If it is not started, issue a $S LINE(nnnn) command.
  - If the line is active, issue a $E LINE(nnnn) command to stop the current activity, and then reissue the $S N command.
- If this also fails (having been attempted from both nodes, if necessary), drain the line from both nodes using a $P LINE(nnnn) command followed by a $E LINEnnnn command.
- Then, start the line from both nodes with a $S LINE(nnnn) command (if dial-up line is used, you will have to re-dial after the $S).
- Finally, enter the $S N command from one of the nodes.

Note: Each side of the connection must assign the same password for the line used in the connection. For information about establishing a network connection, see *z/OS JES2 Initialization and Tuning Guide*.

Scope

Single Member. This command will be in effect for this member only. There is no need to have this command issued to all members of the MAS.

Note: All the members of the MAS are connected to that node.

Messages

The $HASP000 message indicates the command was accepted.

The $HASP200 message indicates the target node name is started on the specified line.

Examples

1 **$s n,line6,p=secret**

```
$HASP000 OK
$HASP200 POK STARTED ON LINE6
```

JES2 tries to form a network connection with the node (POK) attached by line 6 with a node password of secret.

2 **$s n,n=wsc**

```
        POK                         WSC

NJEDEF OWNNODE=1                    NJEDEF OWNNODE=2
NODE(1) NAME=POK                    NODE(1) NAME=POK,
NODE(2) NAME=WSC,                           LINE=21
        LINE=20                     NODE(2) NAME=WSC
LINE20  UNIT=017                    LINE21  UNIT=017

-------------------------------------------------------
...                                 $SLNE21
$SN,N=WSC                           ...
```

The $S N command is entered from NODE(POK) to begin networking. POK's initialization deck has LINE20 dedicated to node(2) or WSC. Since the node has a dedicated line, the line is automatically started and POK initiates signon processing to establish a connection.

Note: If POK's initialization deck did not dedicate LINE20 to WSC, a $SLINE20 would be needed to start the line before $SN,N=WSC can be issued.

$S N - Start Node Communication on a SNA Line

Function

To start an SNA application-to-application session with another node and to automatically start dedicated lines.

Syntax

```
►►─$S─N─┬──────────────┬─┬──────────────┬─┬──────────────┬─────────────────────►◄
        └,LINEnnnn─────┘ └,A=applname───┘ └,N=nodename───┘
```

Parameters

N Identifies this as a start networking command.

LINEnnnn
The started logical line that is used for the application-to-application session. The physical SDLC line(s) involved are managed by VTAM and the Network Control Program (NCP). If you omit this parameter, a SNA logical line is selected from a pool of available, idle SNA logical lines. At least one SNA line must be available to establish a SNA session. If you specify a currently-used or drained line, the command is rejected. If a line has been dedicated to this application, (LINE= on the APPL statement) or to this node (LINE= on the NODE statement) it will be automatically started and a SNA connection will be established.

A=applname
The name of the application with which a SNA application-to-application session is started. This name corresponds to the APPLID= value on the LOGON(1) initialization statement at the node with which a session is desired.

Note: When a $SN is applid qualified and the applid is not defined but happens to be a known node name, it dynamically adds the applid and then tries to start the connection with that applid.

N=nodename
The 1 to 8 alphanumeric or special ($, #, or @) character name of the node used to start networking. Use an APPLID= associated with node or dynamically create an application with this nodename.

Authority Required

This command requires **system** authority. The description of the $T RDRnn command explains how to ensure the proper MVS system command group authority is assigned. $T NODE(nnnn) sets the command authority for a node.

This command requires **control** security access authority. For a description of assigning command input authority, see *z/OS JES2 Initialization and Tuning Guide*.

Processing Considerations

If a node is a multi-access spool node, each member of that node must be uniquely defined as an application to VTAM and the application names used must be defined to JES2 with APPL initialization statements. APPL initialization statements must be supplied at every node in the network that may initiate SNA sessions with these applications.

Scope

Single Member. This command will be in effect for this member only. There is no need to have this command issued to all members of the MAS.

Note: All the members of the MAS are connected to that node.

Messages

The $HASP200 message indicates that the NJE node at which this SNA session is requested has correctly identified itself to this JES2 system.

Example

1 **$s n,a=wsc**

```
$HASP200 POK STARTED ON LINE15   SESSION DENVER
```

This JES2 system tries to initiate a SNA application-to-application session with the application defined to JES2 and VTAM as DENVER.

```
        POK                          WSC

NJEDEF OWNNODE=1                     NJEDEF OWNNODE=2
NODE(1) NAME=POK                     NODE(1) NAME=POK,
NODE(2) NAME=WSC,                            LINE=21
        LINE=20                      NODE(2) NAME=WSC
LINE20  UNIT=SNA                     LINE21  UNIT=SNA
APPL(POK) NODE=1                     APPL(WSC) NODE=2
LOGON1 APPL=POK                      LOGON1 APPL=WSC
-------------------------------------------------------

$SLOGON1                             ...
...                                  $SLOGON1
$SN,N=WSC                            ...
```

At NODE(POK), $SN searches for an APPL that is assigned to node 2. If none is found, APPL(WSC) is created. NODE(WSC) points to LINE20, which is automatically started. The node password is automatically obtained from NODE(WSC).

At NODE(WSC), HASPSNA searches for an APPL assigned to node 1. If none is found, APPL(POK) is created. NODE(POK) points to LINE21, which is automatically started.

2 **$SN,A=XXXXXX where WASHDC is not defined as applid, but is a valid node name.**

```
$HASP000 OK
$HASP094 I/O ERROR ON LNE37    SNA ,17,0000,

The $SN fails because the applid is not known

087D0001,1410010000000002484800000,XXXXXX
$DAPPL(XXXXXX)
$HASP821 APPL(XXXXXX) 240
$HASP821 APPL(XXXXXX)    NODE=38,COMPACT=0,LINE=0,LOGMODE=,
```

$S OFFn.xxn - Start Offload Transmitters and Receivers

Function

To cause the specified offload transmitter(s) and/or receiver(s) to automatically start each time the corresponding offload device is started.

Syntax

```
►►─$S─┬─OFFn.JRn─┬─┬──────────────┬─────────────────────────────────────────►◄
      ├─OFFn.JTn─┤ │ ,OFFn.JRn    │
      ├─OFFn.SRn─┤ │ ,OFFn.JTn    │
      └─OFFn.STn─┘ │ ,OFFn.SRn    │
                   └ ,OFFn.STn    ┘
```

Parameters

OFFn.JRn
The offload job receiver that is started, where n is the number (1-8) of the corresponding offload device.

OFFn.JTn
The offload job transmitter that is started, where n is the number (1-8) of the corresponding offload device.

OFFn.SRn
The offload SYSOUT receiver that is started, where n is the number (1-8) of the corresponding offload device.

OFFn.STn
The offload SYSOUT transmitter that is started, where n is the number (1-8) of the corresponding offload device.

Authority Required

This command requires **device** authority. The description of the $T RDRnn command explains how to ensure the proper MVS system command group authority is assigned.

This command requires **update** security access authority. For a description of assigning command input authority, see *z/OS JES2 Initialization and Tuning Guide*.

Processing Considerations

- If the offload device is already active, the transmitters and/or receivers start immediately.
- You can start only one job receiver, SYSOUT receiver, job transmitter and SYSOUT transmitter for a specific offload device and each must be specified with the corresponding device number.
- If you issue the $DU command for the transmitters before the associated offload device is started, it will display their status as STARTABLE.

Scope

Single Member. This command will be in effect for this member only. There is no need to have this command issued to all members of the MAS.

Messages

The $HASP000 message indicates the command was accepted.

Example

```
1  $s off1.jt,off2.sr

$HASP000 OK
```

JES2 starts the offload job transmitter for offload device 1 and the offload SYSOUT receiver for offload device 2.

$S OFFLOADn - Start an Offload Device

Function

To start an offload device.

Syntax

```
►►──$S──OFFLOADn──,TYPE=──┬─TRANSMITT─┬──────────────────────────────────────►◄
                          └─RECEIVE───┘
```

Parameters

OFFLOADn
The offload device (1-8) that is started.

TYPE=
Specifies the type of operation that the offload device performs.

TRANSMIT
The offload device is used to transmit jobs and/or SYSOUT from the spool data set to the offload data set.

RECEIVE
The offload device is used to receive jobs and/or SYSOUT from the offload data set to the spool data set.

Authority Required

This command requires **device** authority. The description of the $T RDRnn command explains how to ensure the proper MVS system command group authority is assigned.

This command requires **update** security access authority. For a description of assigning command input authority, see *z/OS JES2 Initialization and Tuning Guide*.

Processing Considerations

- If the offload device is already in use on any member in the multi-access configuration, JES2 denies the start and issues the $HASP593 message.
- If the corresponding offload data set is already in use by another offload device, JES2 denies the start and issues the $HASP614 message.
- When you start an offload device, any associated transmitters/receivers that have been started, become active.

Scope

Single Member. This command will be in effect for this member only. There is no need to have this command issued to all members of the MAS.

Messages

The $HASP000 message indicates the command was accepted.

Example

1 `$s offload1,type=transmit`

```
$HASP000 OK
```

JES2 starts offload device 1 to transmit jobs and/or SYSOUT from the spool data set to the offload data set.

$S PRTnnnn and $S Rnnnn.PRm - Start a Printer

Function

To start printer activity. The $HASP190 message asks whether the requested setup has been completed for the specified device. Either verify that the setup is complete or issue the $T PRTnnnn command to override specific setup specifications. Then reissue the $S command to physically start the printer.

Syntax

```
►►─$S─┬─PRTnnnn──────┬─┬──────────────┬──────────────────────────────────────►◄
      └─Rnnnn.PRm────┘ │ ┌─,PRTnnnn───┐│
                       └─└─,Rnnnn.PRm─┘┘
```

Parameters

PRTnnnn
The local printer that is started.

Rnnnn.PRm
The remote printer that is started.

Authority Required

This command requires **device** authority. The description of the $T RDRnn command explains how to ensure the proper MVS system command group authority is assigned.

This command requires **update** security access authority. For a description of assigning command input authority, see *z/OS JES2 Initialization and Tuning Guide*.

Scope

Single Member. This command will be in effect for this member only. There is no need to have this command issued to all members of the MAS.

Messages

The $HASP000 message indicates the command was accepted.

If work is found, JES2 issues the $HASP150 message indicating that the specified device is starting to process output.

If no work is found, JES2 issues the $HASP160 message indicating that the specified device found no work in the queue(s).

The $HASP626 message indicates that the unit device has not been specified or is invalid.

The $HASP627 message indicates that the unit device has been specified, but is unavailable.

Example

```
1  $s prt1, r2.pr3

  $HASP000 OK
```

JES2 starts local printer 1 and printer 3 at remote workstation 2.

$S PUNnn and $S Rnnnn.PUm - Start a Punch

Function

To start punch activity. The $HASP190 message asks whether the requested setup has been completed for the specified device. Either verify that the setup is complete or issue the $T PUNnn command to override specific setup specifications. Then reissue the $S command to physically start the punch.

Syntax

```
►►──$S──┬─PUNnn──────┬──┬──────────┬──────────────────────────────────────►◄
        └─Rnnnn.PUm──┘  ├─,PUNnn───┤
                        └─,Rnnnn.PUm┘
```

Parameters

PUNnn
The local punch that is started.

Rnnnn.PUm
The remote punch that is started.

Authority Required

This command requires **device** authority. The description of the $T RDRnn command explains how to ensure the proper MVS system command group authority is assigned.

This command requires **update** security access authority. For a description of assigning command input authority, see *z/OS JES2 Initialization and Tuning Guide*.

Scope

Single Member. This command will be in effect for this member only. There is no need to have this command issued to all members of the MAS.

Messages

The $HASP000 message indicates the command was accepted.

If work is found, JES2 issues the $HASP150 message indicating that the specified device is starting to process output.

If no work is found, JES2 issues the $HASP160 message indicating that the specified device found no work in the queue(s).

The $HASP626 message indicates that the unit device has not been specified or is invalid.

The $HASP627 message indicates that the unit device has been specified, but is unavailable.

Example

1 `$s pun1,r3.pu2`

```
$HASP000 OK
```

JES2 starts local punch 1 and punch 2 at remote workstation 3.

$S RDRnn and $Rnnnn.RDm - Start a Reader

Function

To start a system input reader.

Syntax

```
►►──$S──┬─RDRnn──────┬─┬──────────────┬──────────────────────────────────────►◄
        └─Rnnnn.RDm──┘ │ ┌─,RDRnn─────┐│
                       └─└─,Rnnnn.RDm─┘┘
```

Parameters

RDRnn
The local system input reader that is started.

Rnnnn.RDm
The remote reader that is started.

Authority Required

This command requires **device** authority. The description of the $T RDRnn command explains how to ensure the proper MVS system command group authority is assigned. The $T RDI command sets the command authority for internal readers.

This command requires **update** security access authority. For a description of assigning command input authority, see *z/OS JES2 Initialization and Tuning Guide*.

Scope

Single Member. This command will be in effect for this member only. There is no need to have this command issued to all members of the MAS.

Messages

The $HASP000 message indicates the command was accepted.

The $HASP626 message indicates that the unit device has not been specified or is invalid.

The $HASP627 message indicates that the unit device has been specified, but is unavailable.

Example

1 `$s rdr1,r4.rd2`

```
$HASP000 OK
```

JES2 starts local reader 1 and reader 2 at remote workstation 4, making them available to process job streams.

$S RMT(nn) - Automatically Connect a Remote Terminal

Function

To automatically log on to a specified SNA remote terminal.

Syntax

```
►►──$S──RMT──┬─nn──┬──────────┬──┬──────────────────────────────────────────►◄
             │     └─-─┬─nn─┬─┘  │
             │         └─*──┘    │
             │   ┌──────────────┐│
             │   ▼              │
             └──(──┬─nn─┬──┬─-─┬─nn─┬──┬─)──┘
                   └─*──┘  │ └─*──┘  │
                           │         │
```

Parameters

nn The subscript defining the remote terminal(s) that are automatically connected. The subscript may specify a specific 1 to 4 digit remote terminal identifier or a range as defined by an RMTnn initialization statement.

Authority Required

This command requires **device** authority. The description of the $T RDRnn command explains how to ensure the proper MVS system command group authority is assigned.

This command requires **control** security access authority. For a description of assigning command input authority, see *z/OS JES2 Initialization and Tuning Guide*.

Processing Considerations

- The correct LUNAME= parameter must have been specified on the RMT(nn) initialization statement for the automatic logon to be successful.
- The actual logon will take place when needed system resources are available. See *z/OS JES2 Initialization and Tuning Reference* for further information.
- This command is for SNA remote terminals only; remote terminals connected over a BSC line are not supported by automatic logon. BSC remote terminals are started using a control card. See *Operator's Library: OS/VS2 Remote Terminals (JES2)* for more information.

Scope

Single Member. This command will be in effect for this member only. There is no need to have this command issued to all members of the MAS.

Messages

The $HASP879 message displays the current status of the specified remote terminal(s).

Example

1 `$s rmt(125-127)`

```
$HASP879 RMT125 DEVTYPE=LUTYPE1,STATUS=INACTIVE
$HASP879 RMT126 DEVTYPE=LUTYPE1,STATUS=INACTIVE
$HASP879 RMT127 DEVTYPE=LUTYPE1,STATUS=INACTIVE
```

JES2 automatically logs on to remote terminals 125, 126 and 127 when the needed system resources are available.

$S SPOOL - Start a Spool Volume

Function

To add or reactivate a spool volume to the spool configuration.

Syntax

```
►►─$S──┬─SPL──────┬──┬──────────────────────────┬──┬─────────┬──┬──────────┬──┬─────────┬──────────────────────────────►
       └─SPOOL────┘  ├─volser──────────────────┤  └─,Cancel─┘  └─,─┬─Drain─┬┘  └─,Format─┘
                     ├─'volser'──────────────────┤                 └─P─────┘
                     └─(──┬─volser──────┬──)─┘
                          ├─*───────────┤
                          └─'volser'────┘

►──┬──────────────────────────────
```

+|-memname
The memnames (1 to 4 characters) to be added to (+) or deleted from (-) the current list of members that this volume is associated with. If neither + nor - is specified, the affinities of the volume is explicitly to the specified members. '*' specifies the member the command was issued on.

HALT|Z
JES2 brings the spool volume into the spool environment with a status of INACTIVE. A new volume can also be formatted but allocation of spool space is prevented.

volser
The volume serial number of the spool volume. The first 4 or 5 characters must be identical to the 4-5 character prefix specified by the VOLUME= parameter on the SPOOLDEF initialization statement. If the specified spool volume is already in use, JES2 issues the $HASP893 message indicating that it is active and allocation is permitted.

Authority Required

This command requires **system** authority. The description of the $T RDRnn command explains how to ensure the proper MVS system command group authority is assigned.

This command requires **control** security access authority. For a description of assigning command input authority, see *z/OS JES2 Initialization and Tuning Guide*.

Processing Considerations

If a spool failure occurs, the operator should be instructed to issue a $Z SPL command for each volume that is in error. This will prevent JES2 from trying to allocate more space from that volume, and from being selected for work (i.e. conversion, execution, and printing).

If a member wide warm start is done without the volumes that had errors on them, then JES2 message $HASP424, VOLUME NOT MOUNTED, will be issued followed by JES2 message $HASP853, REPLY GO, QUIT, or PURGE. If the volume is thought to be recoverable at some time, reply GO. This will cause the volume to come up in an inactive state. The jobs that have space allocated from this volume will not be available for work. JES2 will not attempt to use any space from the volume until a $S SPL command is issued.

If the volume is permanently damaged, reply PURGE to this message. Reply PURGE only if you are absolutely certain that the volume cannot be recovered. Replying PURGE will cause all jobs with space allocated from that volume to be purged. No messages or warning will be issued indicating that this happened.

To lessen the impact of a spool failure, use the SPOOLDEF FENCE=(ACTIVE=YES,VOLUMES=nn)option to specify the number (nn) of volumes to initially allocate for jobs. This can be set at initialization or may be changed via an operator command. This will cause JES2 to allocate all the track groups for a job from the specified number of volumes. If spool fencing is not used, JES2 will allocate the track groups for a job from as many spool volumes as it can. Without spool fencing, the loss of one spool volume may affect more jobs in the system than if spool fencing had been used. For more information about spool fencing, see *z/OS JES2 Initialization and Tuning Guide*.

JES2 exits 11 and 12 can be used as an alternative method for limiting the volumes from which a job may allocate space.

Scope

MAS-Wide. This command has an effect across the entire MAS.

Messages

The $HASP893 message indicates the command was accepted.

The $HASP423 message indicates that an unformatted spool volume is now being formatted.

Examples

1 `$sspl(spool1),format,p`

```
$HASP893 VOLUME(SPOOL2)  STATUS=INACTIVE,COMMAND=(START,FORMAT,
$HASP893                 DRAIN)
$HASP646 2.0952 PERCENT SPOOL UTILIZATION
```

JES2 formats a new spool volume, SPOOL1, and then drains it.

2 `$sspl(spool1),format,z`

```
$HASP893 VOLUME(SPOOL2)  STATUS=INACTIVE,COMMAND=(START,FORMAT,
$HASP893                 HALT)
$HASP646 2.0952 PERCENT SPOOL UTILIZATION
```

JES2 formats a new spool volume, spool2, and then halts it.

3 `$sspl(spool3)`

```
$HASP893 VOLUME(SPOOL3)  STATUS=DRAINING,COMMAND=(START)
$HASP646 33.3333 PERCENT SPOOL UTILIZATION
```

JES2 starts a spool volume, SPOOL3. The volume was previously draining.

4 `$sspl(spool4),p,cancel`

```
$HASP893 VOLUME(SPOOL4)  STATUS=DRAINING,COMMAND=(START,DRAIN)
$HASP646 33.3333 PERCENT SPOOL UTILIZATION
```

JES2 restarts spool volume SPOOL4, cancels the jobs on it, and then drains the volume.

5 `$sspl(spool5),p`

```
$HASP893 VOLUME(SPOOL5)  STATUS=DRAINING,COMMAND=(START,DRAIN)
$HASP646 33.3333 PERCENT SPOOL UTILIZATION
```

JES2 restarts spool volume SPOOL5, and then drains the volume.

6 `$sspl(spool6),z`

```
$HASP893 VOLUME(SPOOL6)  STATUS=DRAINING,COMMAND=(START,HALT)
$HASP646 33.3333 PERCENT SPOOL UTILIZATION
```

JES2 restarts spool volume SPOOL6, and then puts it in a halting state.

$S TRACE(nn) - Start a Trace ID

Function

To activate the specified trace identifier(s).

Syntax

```
►►──$S──TRace──┬──┬──nn──┬──┬──┬──────────────────────────────────────────────────────────►◄
               │  │      │  │  │
               │  │      │  │  │
               │  │      │  │  │
```

Example

1 `$s trace(1-3)`

```
$HASP667 TRACE(1) START=YES
$HASP667 TRACE(2) START=YES
$HASP667 TRACE(3) START=YES
```

JES2 activates trace identifiers 1, 2, and 3.

$S XEQ - Allow JES2 and WLM-Controlled Initiators to Select Work

Function

To allow JES2 and WLM-controlled initiators to select work.

Syntax

```
►►──$S──XEQ──────────────────────────────────────────────────────────►◄
```

Authority Required

This command requires **system** authority. The description of the $T RDRnn command explains how to ensure the proper MVS system command group authority is assigned.

This command requires **control** security access authority. For a description of assigning command input authority, see *z/OS JES2 Initialization and Tuning Guide*.

Processing Considerations

$S XEQ negates a prior $P XEQ (if any) and allows JES2 and WLM initiators to resume selecting new work.

Scope

Single Member. The values will be in effect for this member only.

Messages

The $HASP000 message indicates the command has been accepted.

Examples

1
```
$s xeq
```

```
$HASP000 OK
```

JES2 and WLM initiators may now select jobs from the JES2 job queue.

$T A - Display, Specify, and Modify Automatic Commands

Function

- To display the automatic commands currently in effect.
- To specify a new command or series of commands for automatic processing.
- To modify an existing automatic command entry.

Syntax

```
►►──$T──A──┬──,ALL──┬──┬──,I=ssss──,'command(;command)...'──┬──┬──,I=ssss──,'command(;command)...'──┬──────────►
           │        │  │  ,T=hh.mm──────────────────────────┘  │  ,T=hh.mm──────────────────────────┘
           └──cccc──┬──┘  ,I=ssss──,'command(;command)...'──┬──┘
                    │     ,T=hh.mm──────────────────────────┘
                    └──────────────────────────────────────┘

►──,L=──┬──a────┬──────────────────────────────────────────────────────────────────────────────────────────►◄
        │──cc───│
        │──cca──│
        │──name─│
        └──name-a┘
```

Parameters

ALL

If you specify ALL without any other parameters except the optional L= parameter, JES2 displays all automatic command entries you are authorized to see.

If you specify ALL with additional operands, JES2 modifies all automatic command entries you are authorized to change.

cccc

The 1 to 4 character identifier of an existing automatic command entry or a new entry generated by JES2. If you do not specify any other parameters except the optional L= parameter, and an automatic command entry with the specified identifier already exists, JES2 displays the entry.

If you specify cccc with additional parameters, and an automatic command entry with this identifier exists, JES2 modifies the entry. If there is no entry with the specified identifier, JES2 generates one.

Notes:

1. If you omit this operand and this is not a display-only request, JES2 assigns an identifier for you.
2. Do not specify an identifier that will cause the $TA command to match any existing JES2 command.

   For example, **$TA LLOG,I=hh.mm,'$command'**, requests an automatic command be created with the identifier LLOG. Similarly, if **$TA PPL,I=hh.mm,'$command'** is specified, it will be misinterpreted as a **$TAPPL** command.

I=ssss

The time interval, in seconds, at which the specified command(s) are repeated; 10 seconds is the minimum value. Leading zeros may be omitted. The maximum number of seconds is 86,400 (the number of seconds in one day).

See “Processing Considerations” below for additional information on how a time or date change affects this parameter.

T=hh.mm

The time of day, in hours and minutes from the last midnight, that the specified command(s) are issued. The maximum value is 168.59 (168 hours, 59 minutes). A leading zero may be omitted from the hour specification.

See “Processing Considerations” below for additional information on how a time or date change affects this parameter.

The following example is set to run at 12:30 am, at an interval of 24 hours.

```
$T A,T=00.30,I=86400,'$ VS,"I SMF"''
```

However, if the above command is given at 13:00, it will be run immediately and repeat every 24 hours.

Notes:

1. If you specify a time that is earlier than the current time, and you have specified an interval, the command is issued immediately and is repeated according to the specified time interval.

   If you specify a time that is earlier than the current time, without specifying an interval, the command is issued immediately and then cancelled.
2. If you specify a time that does not include an hour specification (hh) but only a minute specification (mm), the command is cancelled **without** being issued.
3. If you modify the system time to an earlier time, the interval is not remembered for more than 168.59 hours (7 days).

‘command’

The JES2 command that is automatically issued. Multiple commands must be separated by semicolons (;).

Apostrophes within the command text must be doubled, as shown in the following examples. Within a command string, a pair of single quotes is interpreted as one single quote.

If the command you wish to enter is: $VS,’D A’, and you want the command to be issued at 20-second intervals starting at 12:05, you would enter: **$TA,I=20,T=12.05,’$VS,’D A’**.

To issue the MVS SEND command as an automatic command, you would enter: **$TA,I=20,T=12.05,’$VS,’’SEND’’’’message text’’’’,USER=(userid)’’’**.

Notes:

1. JES2 verifies the validity of and the authority for these commands at command execution time, not when you issue the $T A command.
2. You can route the response messages associated with these commands by specifying the L=cca operand within the quotes.

L=a|cc|cca|name|name-a

The area (a), console identifier (cc), area and console identifier (cca), or symbolic console name (name) and output area (name-a) of the active MCS console at which the responses to the $T A commands appear. If this operand is omitted, the console of entry is assumed. If the automatic commands are entered through a card reader or an internal reader, console 1 is assumed.

Authority Required

When $T A creates a command element, it requires a console of at least equal authority to reference it with another $T A command.

This command requires **system** authority. The description of the $T RDRnn command explains how to ensure the proper MVS system command group authority is assigned.

This command can require **control** security access authority. For a description of assigning command input authority, see *z/OS JES2 Initialization and Tuning Guide*.

Access level to create an automatic command is always READ. Access level to modify (or cancel) an automatic command depends on whether or not the requestor created the automatic command. If the requestor created the automatic command, the access level is READ. If not, the access level required is CONTROL.

Processing Considerations

When you code this command, JES2 establishes a starting point (when to begin issuing a command), and an interval (when to repeat a command).

Effects on Automatic Commands When Changing the Date or Time

When a time or date change occurs, the interval (for example, every 2 hours) remains the same, but the time (for example, 1:00 a.m.) when the command will next be issued is recomputed.

Using the example below, several scenarios follow to help you understand the effects of changing the time or date.

By issuing the command:

```
$TA, T=1:00,I=7200,'$D LINE 1'
```

the interval is set for an automatic command to be issued every two hours. It is first issued at 1:00 a.m. The next issuance would be at 3:00 a.m.

When You Change the Time Backward or Forward:

- If, at 1:15 a.m., the clock is set back one hour, making the current time 12:15 a.m., the command will not be issued **again** at 1:00 a.m., but will be issued at the next interval (two hours beyond 1:00 a.m.), which is 3:00 a.m.
- If, at 1:15 a.m., the clock is set ahead two hours, making the current time 3:15 a.m., the command will be issued immediately, at 3:15 a.m., and will be issued again at the next interval (two hours beyond 3:15 a.m.), which is 5:15 a.m.

When You Change the Date Backward or Forward:

- If the date is changed at 1:15 a.m., from day 200 to day 199, the command will not be issued **again** at the intervals where the command was already issued. Thus, it won't be issued again until 3:00 a.m. on day 200.
- If the date is changed at 1:15 a.m., from day 200 to day 201, the command is issued immediately, then scheduled to be issued again at the next interval, which is 3:15 a.m.

Scope

Single Member. This command applies to this member only.

Depending on your installation's setup, however, you might want this command to be applied to all members of the MAS (to ensure a consistent environment across the MAS). If so, you can use the MVS ROUTE *ALL command to issue this

command to all active members (if the JES2 command character is the same on all members). See *z/OS MVS System Commands* for more information on using the ROUTE *ALL command.

Messages

The $HASP604 message indicates the contents of the command element being created, displayed, modified, or deleted.

Examples

1 `$t a,i=90,'$du,prt6'`

```
$HASP604 ID 2    T=**.** I=  90 L=01       $DU,PRT6
$HASP603 PRT6      UNIT=000F,STATUS=DRAINED,BURST=NO,CKPTLINE=0,
$HASP603           CKPTMODE=PAGE,CKPTPAGE=100,CKPTSEC=0,
$HASP603           CREATOR=,DEVFCB=,FCB=STD3,FORMS=(STD,,,,,,),
$HASP603           FSS=HFAM,JOBNAME=,LASTFORM=STD,LIMIT=(0,*),
$HASP603           COPYMARK=DATASET,MARK=NO,MODE=FSS,
$HASP603           NEWPAGE=DEFAULT,NPRO=300,PAUSE=NO,PLIM=(0,*),
$HASP603           PRESELCT=YES,PRMODE=(LINE),QUEUE=HFAM,
$HASP603           RANGE=(J1,32767),ROUTECDE=(LOCAL),SEP=YES,
$HASP603           SEPCHARS=DEFAULT,SEPDS=NO,SETUP=HALT,SPACE=,
$HASP603           TRACE=NO,TRANS=DEFAULT,TRKCELL=NO,UCS=GT10,
$HASP603           UCSVERFY=NO,VOLUME=(,,,),WRITER=,
$HASP603           WS=(W,Q,R,PRM,LIM/F,UCS,FCB)
```

JES2 issues the $HASP604 message in response to the $T A command. JES2 issues the automatic command ($D U,PRT6) every 90 seconds. JES2 issues the $HASP603 message in response to the automatic command.

2 `$t a,all`

```
$HASP604 ID 2  T=17.29 I=  90 L=CN3D8  $DPRINTDEF
$HASP604 ID 1  T=17.30 I=  90 L=CN3E0  $DUPRT6
```

JES2 displays all the automatic command entries you are authorized to see.

3 `$t a,i=90,'$du,prt6,1=cn3d8-a',l=b`

```
ID 6    T=**.** I=  90 L=01       $DU,PRT6,1=CN3D8-A
$HASP603 PRT6      UNIT=000F,STATUS=DRAINED,BURST=NO,CKPTLINE=0,
$HASP603           CKPTMODE=PAGE,CKPTPAGE=100,CKPTSEC=0,
$HASP603           CREATOR=,DEVFCB=,FCB=STD3,FORMS=(STD,,,,,,),
$HASP603           FSS=HFAM,JOBNAME=,LASTFORM=STD,LIMIT=(0,*),
$HASP603           COPYMARK=DATASET,MARK=NO,MODE=FSS,
$HASP603           NEWPAGE=DEFAULT,NPRO=300,PAUSE=NO,PLIM=(0,*),
$HASP603           PRESELCT=YES,PRMODE=(LINE),QUEUE=HFAM,
$HASP603           RANGE=(J1,32767),ROUTECDE=(LOCAL),SEP=YES,
$HASP603           SEPCHARS=DEFAULT,SEPDS=NO,SETUP=HALT,SPACE=,
$HASP603           TRACE=NO,TRANS=DEFAULT,TRKCELL=NO,UCS=GT10,
$HASP603           UCSVERFY=NO,VOLUME=(,,,),WRITER=,
$HASP603           WS=(W,Q,R,PRM,LIM/F,UCS,FCB)
```

JES2 redirects the response to the $T A command to out-of-line area B at the console where the $T A command was entered. JES2 issues the automatic command ($D U,PRT6) every 90 seconds. JES2 issues the $HASP603 message in response to the automatic command, then redirects this response to out-of-line area A of console CN3D8. Neither $HASP604 nor $HASP603 message ID appears when the response is directed to an out-of-line area.

4 `$t a,i=30,'$du,rdr1,l=CN3E0'`

```
$HASP604 ID L    T=16.16 I=  90 L=01       $DURDR1
$HASP603 RDR1      UNIT=000C,STATUS=DRAINED,AUTH=(DEVICE=NO,
```

```
$HASP603          JOB=NO,SYSTEM=NO),CLASS=A,HOLD=NO,MSGCLASS=A,
$HASP603          PRIOINC=0,PRIOLIM=15,PRTDEST=LOCAL,
$HASP603          PUNDEST=LOCAL,SYSAFF=(ANY),TRACE=NO,
$HASP603          XEQDEST=LOCAL
```

JES2 redirects the response the $T A command (HASP604) to console CN3E0. JES2 issues the automatic command ($d u,rdr1) every 30 seconds. JES2 issues the $HASP603 message in response to the automatic command and redirects this response to console CN3E0.

Note: Neither $HASP604 nor $HASP603 message ID appears when the response is directed to an out-of-line area.

$T APPL - Control JES2 Applications

Function

To specify the characteristics of one or more JES2 applications.

One or more parameters on this command accepts wildcards. Parameter descriptions will note that.

Syntax

```
►►──$T──APPL──┬─'aaaaaaaa'──────────────┬──┬─┤ Selection limiting keywords ├──►
              │          ┌──────────┐   │  │
              │          ▼          │   │  │
              └─(──┬─aaaaaaaa──┬──┘──)──┘  │
                   └─'aaaaaaaa'─┘          │
►──┬─┤ Modification keywords ├──┬──────────────────────────────────────────►◄
   │                          │
```

Modification keywords:

```
├──┬──────────────┬──┬──────────────┬──┬──────────────────────────────┬──►
   │ ,COMPACT=nn  │  │ ,LINE=nnnn   │  │ ,LOGMODE=xxxxxxxx            │
   └──────────────┘  └──────────────┘  └──────────────────────────────┘

   └──────────────┘  └──────────────┘  └──────────────┬─nnnn─────────┬─┘
                                                      └─xxxxxxxx─────┘

►──┬──────────────┬──┬──────────────┬──┬──────────────┬──┬──────────────┤
   │ ,LOGON=logon │  │ ,NODE=       │  │ ,REST=nnnn   │
   └──────────────┘  └──────────────┘  └──────────────┘
```

Selection limiting keywords:

```
├──┬──────────────────────────────┬──┬──────────────────────────────┬──►
   │ ,──/──COMPACT──┬─=──┬──nn────│  │ ,──/──LINE──┬─=──┬──nnnn────│
   │                │ ^= │        │  │             │ ^= │          │
   │                │ >  │        │  │             │ >  │          │
   │                │ <  │        │  │             │ <  │          │
   └──────────────────────────────┘  └──────────────────────────────┘

►──┬──────────────────────────────┬──┬──────────────────────────────┬──►
   │ ,──/──LOGON──┬─=──┬──logon───│  │ ,──/──NODE──┬─=──┬──┬─nnnn──┬─│
   │              │ ^= │          │  │             │ ^= │  │xxxxxxxx│
   │              │ >  │          │  │             │ >  │  └───────┘
   │              │ <  │          │  │             │ <  │
   └──────────────────────────────┘  └──────────────────────────────┘

►──┬──┬──────────┬──┬──────────┬──┬─IN-SESSION─────────┬──┬──────────────┤
   │ ,│ /        │  │ ^=       │  │NOT-IN-SESSION      │
   │  └──────────┘  └──────────┘  │OPNDST-PENDING      │
   │                              │OPNSEC-PENDING      │
   └──────────────────────────────┘
```

Parameters

aaaaaaaa

Specifies the 1 to 8 alphanumeric or special ($, #, or @) character subscript defining the JES2 application(s) affected by this command. You may specify a particular application name (for example, JES2) or a wildcards to specify a generic name (for example, JES* or *). See “Using Wildcards” on page 93 for additional information.

COMPACT=nn
The compaction table number (0-99) that is used for outbound compaction in communicating with the specified application(s) at the indicated node. Zero denotes no compaction.

LINE=nnnn
The line used for the SNA NJE session associated with this application. To change this parameter, the application must be inactive.

LOGON=logon
Specifies the number (1-999) of the local LOGON DCT which should be used when specifying connections to the application.

LOGMODE=xxxxxxxx
The 1 to 8 character name of the logon mode table entry that is used for this VTAM application. A logon mode table entry determines which entry the VTAM application logon mode table uses. If the program participates as the secondary end of a session (SLU), the table entry provides a set of session parameters. This parameter is used only for NJE applications. If it is specified for non-NJE applications, the parameter is ignored. The parameter input should adhere to the VTAM naming conventions for a logon mode table entry name. To change this parameter, the application must be inactive.

Default: If you omit the parameter, the system uses the VTAM defaults.

NODE=nnnn|xxxxxxxx
Specifies the 1 to 8 alphanumeric or special ($, #, or @) character symbolic name or number (1-32767) of the node at which the JES2 application is defined to VTAM.

Note: The symbolic name must have been specified on the NAME= parameter of the NODE initialization statement for the referenced node, or must have been defined on the DESTID initialization statement.

REST=nnnn
An integer (0-2000), that represents the resistance rating of the connection as viewed by the installation manager and coordinated with other installations. See *z/OS JES2 Initialization and Tuning Reference* for details about selecting resistances.

STATUS={IN-SESSION|NOT-IN-SESSION|OPNDST-PENDING|OPNSEC-PENDING}
The status of current applications:

IN-SESSION
The application is currently in a session with another application.

NOT-IN-SESSION
The application is not currently in a session.

OPNDST-PENDING
The application is in the process of establishing a session with another application. A SNA OPNDST is expected.

OPNSEC-PENDING
The application is in the process of establishing a session with another application. A SNA OPNSEC is expected.

Authority Required

This command requires **system** authority. The description of the $T RDRnn command explains how to ensure the proper MVS system command group authority is assigned.

This command requires **control** security access authority. For a description of assigning command input authority, see *z/OS JES2 Initialization and Tuning Guide*.

Processing Considerations

If the application is active, you cannot change the specifications.

Scope

Single Member. This command will be in effect for this member only. There is no need to have this command issued to all members of the MAS.

Messages

The $HASP821 message displays the current values of all the parameters on the APPL initialization statement.

Example

```
1  $t appl(jesc),node=4

$HASP821 APPL(JESC) NODE=4,COMPACT=0,LINE=0,LOGMODE=,REST=0
```

The application named JESC is known to VTAM at node 4.

$T BUFDEF - Control Local Buffers

Function

To specify the percentage of local buffers used at which JES2 alerts the operator of a local buffer shortage. Local buffers can reside below 16 megabytes of virtual storage or above 16 megabytes of virtual storage.

Syntax

```
►►──$T──BUFDEF──┬──────────────
```

Scope

Single Member. This command will be in effect for this member only.

Depending on your installation's setup, however, you might want this command to be applied to all members of the MAS (to ensure a consistent environment across the MAS). If so, you can use the MVS ROUTE *ALL command to issue this command to all active members (if the JES2 command character is the same on all members). See *z/OS MVS System Commands* for more information on using the ROUTE *ALL command.

Messages

The $HASP840 message displays the current values of all the parameters on the BUFDEF initialization statement.

Example

```
1  $t bufdef,belowbuf=(limit=200,warn=75),
extbuf=(limit=225,warn=5)

  $HASP840 BUFDEF BELOWBUF=(LIMIT=200,WARN=75,FREE=200),
           EXTBUF=(LIMIT=225,WARN=65,FREE=225)
```

The WARN value indicates that, when 75% of the local buffers are in use, JES2 issues the $HASP050 message to alert the operator of a local buffer shortage.

$T CKPTDEF - Set the Checkpoint Definition

Function

- To modify the checkpoint definition
- To initiate a checkpoint reconfiguration dialog with JES2

Syntax

```
►►──$T──CKPTDEF──┬──────────────────────────────┬──┬──────────────────────────┬──►
                 └─,DUPLEX=──┬─OFF─┬─┘  └─,MODE=──┬─DUAL───┬─┘
                             └─ON──┘              └─DUPLEX─┘

►──┬──────────────────────────────────────────────────────────┬──┬──────────────────────────────────────────────────────────┬──►
   │                  ┌──────────────────────────┐            │  │                  ┌──────────────────────────┐            │
   └─,NEWCKPT1=(──────┴─┬─DSName=dsname──────────┬─┴─)─┘  └─,NEWCKPT2=(──────┴─┬─DSName=dsname──────────┬─┴─)─┘
                        ├─STRname=strname────────┤                             ├─STRname=strname────────┤
                        └─VOLser=volser──────────┘                             └─VOLser=volser──────────┘

►──┬──────────────────────┬──┬──────────────────────┬──┬──────────────────────────────────────────────────────────┬──►
   └─,OPVERIFY=──┬─────┬─┘  └─,RECONFIG=──┬─No──┬─┘  │                  ┌──────────────────────┐            │
                 ├─No──┤                  └─Yes─┘    └─,VERSIONS=(──────┴─┬─NUMBER=number──────┬─┴─)─┘
                 └─Yes─┘                                                   └─WARN=warn──────────┘

►──┬──────────────────────────────────────────────────────────
```

2. If MODE=DUPLEX and only one of the CKPTn data sets is marked INUSE=YES, DUPLEX=ON is not allowed. If you try to set DUPLEX=ON, JES2 issues the $HASP288 message and forces DUPLEX to OFF.
3. If MODE=DUAL, JES2 does not use the value assigned to the DUPLEX= parameter.

   If any CKPT data sets are defined as being on CF (CKPT1, CKPT2, NEWCKPT1, NEWCKPT2) then the mode must be DUPLEX and it cannot be altered.

   If both checkpoint data sets are in use, to change to DUAL mode, all active members must have DUPLEX=ON. If any member is DUPLEX=OFF, the command will fail with a HASP003 message.

Scope: Single Member.

MODE=DUAL|DUPLEX

Specifies whether the multi-access spool configuration will use the data set defined by CKPT2= as the alternate primary checkpoint data set (DUAL) or as the backup to the CKPT1 data set (DUPLEX).

DUAL

Specifies that the data set specified by CKPT2 be used as the alternate primary checkpoint data set. The two data sets, specified by CKPT1= and CKPT2= are used in a “flip-flop” alternating scheme. (Refer to *z/OS JES2 Initialization and Tuning Guide* for a further discussion of DUAL mode processing.)

If any checkpoint data set resides on a coupling facility (STRname= is coded for CKPT1, CKPT2, NEWCKPT1, or NEWCKPT2), JES2 forces the MODE= parameter to DUPLEX.

DUPLEX

Specifies that the data set specified by CKPT2 be used as the backup to the primary checkpoint data set. The data set specified by CKPT1= is the primary checkpoint data set and the data set specified by CKPT2= is the backup (duplex) checkpoint data set. (Refer to *z/OS JES2 Initialization and Tuning Guide* for a further discussion of DUPLEX mode processing.)

Notes:

1. If you specify MODE=DUAL, the DUPLEX= specification is ignored.
2. If you specify MODE=DUPLEX and DUPLEX=OFF for a specific member of the multi-access spool configuration, that member will neither use nor allocate a backup (CKPT2=) checkpoint data set.
3. If you specify MODE=DUPLEX and DUPLEX=ON for a specific member of the multi-access spool configuration, that member **will** use the data set defined by CKPT2= as the backup checkpoint data set.
4. The MODE= parameter must be specified the same for all members of the multi-access spool configuration.
5. The MODE= parameter can be changed via Operator Command.

Performance Considerations: If you specify MODE=DUAL on CKPTDEF, also specifying HOLD=99999999 on the MASDEF statement causes performance degradation. If you must use HOLD=99999999 on MASDEF, be certain to also specify MODE=DUPLEX on CKPTDEF.

Modification: Operator command.

NEWCKPTn=(DSName=dsname)|(STRname=strname)|VOLser=volser)

Specifies the alternate checkpoint data sets that can be used to replace the CKPTn data sets. Should either CKPTn data set experience a failure or otherwise become unavailable, NEWCKPT1 could replace CKPT1 and NEWCKPT2 could replace CKPT2.

The DSNAME= parameter and the VOLSER= parameter are mutually exclusive with the STRNAME= parameter. To remove the value for this parameter without specifying a replacement, specify null values:

```
$T CKPTDEF,NEWCKPT1=(DSN=,VOL=)
```

-or-

```
$T CKPTDEF,NEWCKPT1=(STR=)
```

DSName=dsname

The (1 to 44 character) name of the NEWCKPTn data set.

STRname=strname

Specifies the 1 to 16 character name of the coupling facility structure to be used as a checkpoint data set. This structure must have been defined in the coupling facility policy. The name can contain numeric, uppercase alphabetic, dollar sign ($), at sign (@), pound sign (#), or underscore (_) characters.

You cannot specify the same STRNAME= subparameter for the NEWCKPTn= parameter as that on the CKPTn parameter; the coupling facility does not allow the CKPTn structure name to be forwarded to the NEWCKPTn structure name.

VOLser=volser

The volume serial number on which the data set specified by DSName resides. Although it is not a system requirement that all four checkpoint data sets (CKPT1, CKPT2, NEWCKPT1, NEWCKPT2) reside on separate volumes, it is **strongly recommended** that at least CKPT1 and CKPT2 reside on their own volumes.

Notes:

1. Although it is not a system requirement that you pre-define the NEWCKPTn data sets (either on the CKPTDEF initialization statement or using the $T CKPTDEF command), it is recommended that you do so for ease of use. If you issue the $T CKPTDEF,NEWCKPTn=... command on any one member in the multi-access spool configuration and wait a sufficient length of time (based on the individual systems' HOLD= specifications), that change is reflected across all active members through the CKPTn data set(s).
2. If you do not pre-define the NEWCKPTn data sets, you may dynamically define them when and if needed during the reconfiguration dialog.
3. If you change the NEWCKPTn values (either using the $T CKPTDEF command or during the dialog) and then warm start JES2, the values of NEWCKPTn in the CKPTn data set(s) are used instead of those specified on the CKPTDEF initialization statement (unless PARM=RECONFIG was specified, in which case the values from the CKPTDEF statement are used).

Scope: MAS-Wide.

OPVERIFY=[No|Yes]

Displays whether (Yes) or not (No) JES2 prompts the operator during a JES2-initiated I/O error checkpoint reconfiguration to verify or alter the default

reconfiguration action. JES2 propagates this parameter specification to all members in the MAS. OPVERIFY has no meaning for a checkpoint reconfiguration entered for any other reasons.

No
Suppresses operator verification during the checkpoint reconfiguration dialog. JES2 takes the following default reconfiguration actions:

- For message $HASP273, JES2 replaces the checkpoint data set with its replacement data set defined on the NEWCKPTn parameter of the CKPTDEF statement.
- For message $HASP278, when JES2 cannot locate the specified replacement checkpoint data set, JES2 automatically creates one. This new checkpoint data set can always be defined on DASD, but if you require that it be a new coupling facility structure, JES2 can only create it if you previously defined the coupling facility resource management (CFRM) policy. JES2 cannot dynamically create a CFRM policy even if the original checkpoint was defined as a coupling facility structure. Refer to *z/OS MVS Setting Up a Sysplex* for information on how to define a CFRM policy.

Yes
JES2 prompts the operator during the checkpoint reconfiguration when **entered by JES2 for I/O errors only** to respond to message pairs $HASP273 and $HASP272 or $HASP278 and $HASP272.

Scope: MAS-Wide.

RECONFIG={No|Yes}
Specifies whether or not JES2 should enter the checkpoint reconfiguration dialog.

No
JES2 does not enter the checkpoint reconfiguration dialog.

Yes
JES2 enters the checkpoint reconfiguration dialog so that you can supply the information needed for the checkpoint data set specifications. The dialog allows you to allocate an existing backup data set, create a new data set to replace the checkpoint data set currently in use, or suspend the use of a data set. No other JES2 processing is done during a checkpoint reconfiguration dialog.

If you specify RECONFIG=Y, you **must** not specify any other operands on the $T CKPTDEF command because:

- Those modifications are not reflected on any other member in the MAS configuration.
- When JES2 command processing is unable to accept commands, JES2 can still process the $TCKPTDEF,RECONFIG=Y command if no other operands are specified on the command. The command must be entered in one of the following formats for it to be accepted: accepted:
  - $TCKPTDEF,RECONFIG=Y
  - $TCKPTDEF,RECONFIG=YES
  - $T CKPTDEF,RECONFIG=Y
  - $T CKPTDEF,RECONFIG=YES

  No other operands, blanks, or comments can be entered with the command string.

Scope: MAS-Wide.

VERSIONS=(NUMBER=nn|WARN=mmm)
Indicates modification to the checkpoint versioning parameter.

NUMBER=nn
Changes the maximum number (2-50) of versions of the checkpoint data set that JES2 maintains. Too low a number could result in an application program having to use a copy that does not contain the most recent checkpoint data.

Default: Set by JES2

WARN=mmm
Changes a percent (0-100) usage threshold of versions of the checkpoint data set. When the percentage of checkpoint data versions reaches this threshold, the operator is alerted with the message $HASP050 JES2 RESOURCE SHORTAGE. If you specify 0, no alert is given.

Default: Set by JES2

Scope: Single Member.

VOLATILE=
Specifies how JES2 should respond when a checkpoint data set that resides on a coupling facility enters the state where, if power to the coupling facility is lost, all data on the coupling facility is lost.

This parameter does not apply when a coupling facility structure becomes volatile during the checkpoint reconfiguration dialog.

Before modifying this parameter, consult with your systems programmer and refer to *z/OS JES2 Initialization and Tuning Guide*.

ALLCKPT=
Specifies the action that should be taken if all available checkpoint data sets (INUSE=YES) reside on coupling facilities that become volatile (unstable).

If only one checkpoint resides on a coupling facility, JES2 uses the ALLCKPT subparameter setting.

DIALOG
Specifies that JES2 enters the checkpoint reconfiguration dialog.

IGNORE
Specifies that JES2 ignores when a coupling facility becomes volatile (unstable).

WTOR
Specifies that JES2 issues a WTOR so the operator can determine whether to suspend or continue use of the checkpoint(s) that reside on coupling facility structure(s).

ONECKPT=
Specifies the action taken if the coupling facility on which a checkpoint data set resides becomes volatile (unstable).

JES2 uses the ONECKPT= subparameter settings if:

- Only one of the two checkpoint data sets resides on a coupling facility structure and that coupling facility becomes volatile.

- Both checkpoint data sets reside on a coupling facility, but only one becomes volatile.

DIALOG
Specifies that JES2 enters the checkpoint reconfiguration dialog.

IGNORE
Specifies that JES2 ignores when the coupling facility becomes volatile (unstable).

WTOR
Specifies that JES2 issues a WTOR so the operator can determine whether to suspend or continue use of the checkpoint that resides on a coupling facility structure.

Scope: Single Member.

Authority Required

This command requires **system** authority. The description of the $T RDRnn command explains how to ensure the proper MVS system command group authority is assigned.

This command requires **control** security access authority. For a description of assigning command input authority, see *z/OS JES2 Initialization and Tuning Guide*.

Processing Considerations

If JES2 is currently in the checkpoint reconfiguration dialog, the $T CKPTDEF command is not accepted. JES2 issues the $HASP003 message with RC=30, which indicates the device change request is prohibited.

Scope

The scope of this command varies by parameter. See the description of each parameter for its scope.

The values supplied for some parameters on this command will be in effect across the entire MAS, while the values supplied for other parameters will be in effect for this member only.

Depending on your installation's setup, you might want the parameters for this command to be applied to all members of the MAS (to ensure a consistent environment across the MAS). If so, you can use the MVS ROUTE *ALL command to issue this command to all active members (if the JES2 command character is the same on all members). See *z/OS MVS System Commands* for more information on using the ROUTE *ALL command.

Messages

The $HASP829 message displays the current values of all the parameters on the CKPTDEF initialization statement.

Example

```
1  $t ckptdef,newckpt1=(dsn=sys1.replace1,vol=j2com1),
          newckpt2=(dsn=sys1.replace2,vol=j2com1)

$HASP829 CKPTDEF  CKPT1=(DSNAME=SYS1.JESCKPT1,VOLSER=DATA1,
$HASP829          INUSE=YES,VOLATILE=NO),
$HASP829          CKPT2=(DSNAME=SYS1.JESCKPT2,VOLSER=DATA1,
$HASP829          INUSE=YES,VOLATILE=NO),
```

```
$HASP829          NEWCKPT1=(DSNAME=SYS1.REPLACE1,VOLSER=J2COM1),
$HASP829          NEWCKPT2=(DSNAME=SYS1.REPLACE2,VOLSER=J2COM1),
$HASP829          MODE=DUAL,DUPLEX=ON,LOGSIZE=4,APPLCOPY=NONE,
$HASP829          VERSIONS=(STATUS=INACTIVE,NUMBER=2,WARN=80,
$HASP829          MAXFAIL=0,NUMFAIL=0,VERSFREE=2,MAXUSED=0),
$HASP829          RECONFIG=NO,VOLATILE=(ONECKPT=WTOR,
$HASP829          ALLCKPT=WTOR),OPVERIFY=YES
```

If the data set and/or volume, on which CKPT1 resides, has a failure, JES2 assigns CKPT1 to the SYS1.REPLACE1 data set on volume J2COM1. If the data set and/or volume on which CKPT2 resides has a failure, JES2 assigns CKPT2 to the SYS1.REPLACE2 data set on volume J2COM1.

$T CKPTSPACE - Set the Checkpoint Space

Function

To modify information about the amount of space in the checkpoint.

Syntax

```
►►──$T──CKPTSPACe──┬──────────────────────┬──┬──────────────────────┬──────────────────────────►◄
                   └─,BERTNUM=bertnum─────┘  └─,BERTWARN=bertwarn───┘
```

Parameters

BERTNUM=bertnum
The number(200–500000) of BERT (Block Extent Reuse Table) entries defined in the checkpoint. The lower limit when decreasing this value is based on the number of JQEs defined on the system. In addition, you cannot decrease it below the number of BERTs that are in use. For example, if BERT 23176 is the highest BERT in use, then 23177 is the lowest you can reduce BERTNUM to. This is true even if 23175 is not currently in use. Specifying a value that is too low will result in a HASP003 message with the lowest valid value displayed.

BERTWARN=bertwarn
The threshold of BERT utilization at which the $HASP050 message should be issued. The valid range is 1 to 100.

Authority Required

This command requires **system** authority. The description of the $T RDRnn command explains how to ensure the proper MVS system command group authority is assigned.

This command requires **control** security access authority. For a description of assigning command input authority, see *z/OS JES2 Initialization and Tuning Guide*.

Scope

MAS-wide. The command has an effect across the entire MAS.

Messages

The $HASP852 message displays the current values of all the parameters on the CKPTSPACE initialization statement.

Example

1

```
$t ckptspace,bertnum=6100

  $HASP852 CKPTSPACE  BERTNUM=6100,BERTFREE=6014,BERTWARN=80,
  $HASP852            CKPT1=(CAPACITY=168,UNUSED=3),
  $HASP852            CKPT2=(CAPACITY=168,UNUSED=3)
```

$T CONDEF - Set Console Communication Characteristics

Function

To specify or modify the console communication characteristics of JES2.

Syntax

```
►►──$T──CONDEF──┬──────────────┬──┬──────────────┬──┬──────────────┬──┬──────────────┬──►
                └,BUFNUM=nnnn──┘  └,BUFWARN=nnnn─┘  └,CMDNUM=nnnn─┘  └,CONCHAR=c──┘

►──┬──────────────┬──┬──────────────────┬──┬──────────────┬──┬──────────────┬──┬──────────────┬──►◄
   └,DISPLEN=nnn──┘  └,DISPMAX=nnnnnnnnnn┘  └,MASMSG=nnn───┘  └,RDIRAREA=c───┘  └,RDRCHAR=c───┘
```

Parameters

BUFNUM=nnnn

The BUFNUM parameter specifies the number (4-9999) of console message buffers to be provided for JES2 from private storage (above 16-megabytes in virtual storage). The value specified for BUFNUM will be rounded up to the next page boundary to take advantage of available storage. You can only increase the limit using this command.

BUFWARN=nnnn

The percentage (0-100) of console message buffers used at which the $HASP050 message alerts the operator of a shortage of console message buffers. JES2 deletes this message from the console when the resource shortage is relieved (either by a decrease in resource use or an increase in the threshold).

Note: If you specify 0, no alert is given.

CMDNUM=nnnn

The CMDNUM parameter specifies the maximum number (4-9999) of console message buffers to be allocated from common storage for JES2 command processing.

CONCHAR=c

A single character used to identify JES2 commands from local consoles.

The specification must be one of the following characters:

```
|   %   :   ¢   +   ¬   #   [   ]   !   &

-   @   .   $   /   ?   =   _   (   *   "
```

Note: To use the MVS ROUTE *ALL command to expand the scope of a command, each member of the MAS must have the same CONCHAR character.

DISPLEN=nnn

The display length (50-70) that is used for the displays and error message processing of:

- All initialization statements
- Those commands processed by $SCAN (most of those commands are the $D and $T commands for initialization statement parameters)
- The $DU command.

The main purpose of the DISPLEN= parameter is to control message wrapping on MCS consoles. You should set it to a value that takes into account the MFORM value used for most MCS consoles in your installation. The value 64 is appropriate for single MFORM options, such as MFORM=(J). The minimum value of 50 is appropriate for two MFORM options, such as MFORM=(J,T).

DISPMAX=nnnnnnnnnn
The maximum number (10-2147483647) of lines that JES2 displays for those requests processed by the $SCAN facility. Those requests include initialization parameters and the $T and $D commands for initialization parameters.

Note: The DISPMAX= parameter is not honored when any of the following occur:

- Output is displayed for error conditions.
- Output is destined for an ″out-of-line″ area on the MCS console.
- A command is issued with the explicit L= keyword specifying an out-of-line area.

MASMSG=nnn
The maximum number (10-999) of messages or commands that are queued between any two members of a multi-access spool configuration. Messages or commands exceeding this number are discarded.

RDIRAREA=c
This parameter specifies the default console out-of-line area which JES2 uses to direct display responses for commands subject to redirection. All redirectable commands which do not use either an L= or do not have redirection set up on the issuing console for that command have their responses directed to the RDIRAREA specification.

Default: If RDIRAREA is not specified, JES2 uses a default console area specification of Z.

RDRCHAR=c
The character used to identify all JES2 operator commands entered from a local or remote card reader.

The specification must be one of the following characters:

```
|   %   :   ¢   +   ¬   #   [   ]   !   &

-   @   .   $   /   ?   =   _   (   )   *   "
```

Notes:

1. The RDRCHAR value may be the same as that specified for the CONCHAR parameters on the CONDEF initialization statement.
2. If you change this parameter to a value other than its default ($), the command control statement varies from the format given in *z/OS MVS JCL Reference*.

Authority Required

This command requires **system** authority. The description of the $T RDRnn command explains how to ensure the proper MVS system command group authority is assigned.

This command requires **control** security access authority. For a description of assigning command input authority, see *z/OS JES2 Initialization and Tuning Guide*.

Scope

Single Member. This command will be in effect for this member only.

Depending on your installation's setup, however, you might want this command to be applied to all members of the MAS (to ensure a consistent environment across the MAS). If so, you can use the MVS ROUTE *ALL command to issue this command to all active members (if the JES2 command character is the same on all members). See *z/OS MVS System Commands* for more information on using the ROUTE *ALL command.

Messages

The $HASP830 message displays the current values of all the parameters on the CONDEF statement.

Examples

1 `$t condef,masmsg=300,rdrchar=%`

```
$HASP830 CONDEF  AUTOCMD=20,CONCHAR=$,BUFNUM=200,CMDNUM=100,
$HASP830         BUFFREE=200,BUFWARN=80,MASMSG=300,RDIRAREA=Z,
$HASP830         RDRCHAR=%,SCOPE=SYSTEM,DISPLEN=64,DISPMAX=100
```

JES2 queues a maximum of 300 messages between any two members of a multi-access spool configuration. All commands entered from a local or remote card reader that begin with a percent sign (%) are identified as JES2 commands.

2 `$t condef,bufnum=9998`

```
$HASP830 CONDEF  AUTOCMD=20,CONCHAR=.,BUFNUM=10013,CMDNUM=100,
$HASP830         BUFFREE=10013,BUFWARN=80,MASMSG=200,RDIRAREA=Z,
$HASP830         RDRCHAR=.,SCOPE=SYSTEM,DISPLEN=64,DISPMAX=100
```

The number of console message buffers to be provided has been increased. Note that the value specified for BUFNUM has been rounded up to the next page boundary.

$T CONNect - Change Static Network Connections

Function

To change static network connections that have been previously defined. With this command you can only change static connections: those connections defined by a CONNECT initialization statement or an $ADD CONNECT command.

Note: You cannot use this command to modify the node name or node number in an existing connection.

One or more parameters on this command accepts wildcards. Parameter descriptions will note that.

Syntax

```
►►──$T──CONNect──┬──────────────────────────────┬──┬──────────────────────────────┬──────────────►◄
                 └┤ Selection limiting keywords ├┘  └┤ Modification keywords ├┘
```

Modification keywords:

```
├──┬──────────────────────────┬──┬──────────────────────────────────────────────────────────────┤
   └─,PATHMGR=──┬─No────────┬──┘  └─,REST=nnnn──┘
                ├─RESET─────┤
                └─Yes───────┘
```

Selection limiting keywords:

```
├──┬──────────────────────────────────────────────────────────────────────────────────────────►
   └─,──┬──┬─MA──────────┬──┬──────────────────────────────────────────────────────────────────
        │  └─/──┘         │  │
        ├──┬──┬─MEMBA─────┤  │
        │  └─/──┘         │  │
        └──┬──┬─MEMBERA───┘  │
           └─/──┘            │
                             └─,──┬──┬─MB──────────┬──┬──────────────────────────────────────────
                                  │  └─/──┘         │  │
                                  ├──┬──┬─MEMBB─────┤  │
                                  │  └─/──┘         │  │
                                  └──┬──┬─MEMBERB───┘  │
                                     └─/──┘            │

►──┬──┬──┬──┬──┬──┬──┬──┬──┬──┬──┬──┬──┬──┬──┬──┬──┬──┬──┬──┬──┬──┬──┬──┬──┬──┬──┬──┬──┬──┬──┤
   └─,──┬──┬─NA──────────┬──┬──────────┬──┬──┬──┬──┬──┬──┬──┬──┬──┬──┬──┬──┬──┬──┬──┬──┬──┬──┬──
```

NA|NODEA=xxxxxxxx|nnnn
The 1 to 8 alphanumeric or special ($, #, or @) character symbolic node name (xxxxxxxx) or node number (nnnn) at one end of the connection.

You can specify wildcards on this parameter. See “Using Wildcards” on page 93 for additional information.

The name must match the NAME= parameter of the NODE initialization statement for the referenced node.

NB|NODEB=xxxxxxxx|nnnn
The 1 to 8 alphanumeric or special ($, #, or @) character symbolic node name (xxxxxxxx) or node number (nnnn) at one end of the connection.

You can specify wildcards on this parameter. See “Using Wildcards” on page 93 for additional information.

The name must match the NAME= parameter of the NODE initialization statement for the referenced node.

PATHMGR={No|RESET|Yes}
Indicates whether this connection supports path manager type protocols. PATHMGR=RESET indicates that the value of PATHMGR= should be reset to the default.

Default: The default depends on the specifications for the NODEA= and NODEB= parameters.

- If either node is defined as PATHMGR=NO, the default is PATHMGR=NO.
- If both nodes are defined as PATHMGR=YES, the default is PATHMGR=YES.

REST=nnnn
An integer (2-8000) that represents the resistance rating of the connection as viewed by the installation manager and coordinated with other installations. For information about selecting resistances, see *z/OS JES2 Initialization and Tuning Guide*.

Default: None

Authority Required

This command requires **system** authority. The description of the $T RDRnn command explains how to ensure the proper MVS system command group authority is assigned.

This command requires **control** security access authority. For a description of assigning command input authority, see *z/OS JES2 Initialization and Tuning Guide*.

Scope

Single Member. The values supplied for this command will be in effect for this member only.

Depending on your installation’s setup, however, you might want this command to be applied to all members of the MAS (to ensure a consistent environment across the MAS). If so, you can use the MVS ROUTE *ALL command to issue this command to all active members (if the JES2 command character is the same on all members). See *z/OS MVS System Commands* for more information on using the ROUTE *ALL command.

Messages

The $HASP815 message is issued in response to this command.

Example

An installation is able to change the resistance for a direct connection between two nodes, for example, Phoenix and Tucson.

```
1  $T CONNECT, NODEA=PHOENIX,
   MEMBA=1, NODEB=TUCSON, MEMBB=1, RES=30
```

The above example changes the resistance between the PHOENIX and TUCSON nodes to 30.

$T DEBUG - Set the JES2 DEBUG Option

Function

Use the $T DEBUG=YES|NO command to start or stop the monitoring and recording of JES2 activities.

Use the command, with its other parameters, to selectively request that JES2 monitor and record only certain JES2 activities.

Syntax

```
►►──┬─$T DEBUG=(──┬─Y─┬──)──────────────┬──────────────────────────────────────►◄
    │             └─N─┘                 │
    └─$T DEBUG──────┬──────────────────┬┘
                    └┤ DEBUG CHOICES ├──┘
```

DEBUG CHOICES:

```
├─,BERT──┬─YES─┬──,CKPT──┬─YES─┬──,MISC──┬─YES─┬──,SECURITY──┬─YES─┬──,STORAGE──┬─YES─┬──────────►
        └─NO──┘         └─NO──┘         └─NO──┘             └─NO──┘            └─NO──┘

►─,SYMREC──┬─YES─┬──,VERSION──┬─YES─┬──────────────────────────────────────────────────┤
           └─NO──┘            └─NO──┘
```

Parameters

DEBUG={Y|N}
Specifies whether or not JES2 is to record certain JES2 events and monitor certain JES2 activities. Specifying DEBUG=YES requests JES2 to record *all* events listed individually (BERT=YES, CKPT=YES, and so on) for this command.

BERT={YES|NO}
Specifies whether (YES) or not (NO) JES2 provides error code $BR3 to inform the operator that a data error has been detected in a chain of BERTs.

CKPT={YES|NO}
Specifies whether (YES) or not (NO) JES2 should verify the integrity of the checkpoint data set and protect the storage containing JQEs, JOEs and other checkpoint data when a member releases the checkpoint.

MISC={YES|NO}
Specifies whether (YES) or not (NO) JES2 provides occurrence counting of certain JES2 events.

SECURITY={YES|NO}
Specifies whether (YES) or not (NO) JES2 indicates that the security product (ex: RACF) is to log information contained in the $HASP186 message, or if in WARN mode. This applies JES2 output selection when the security authorization fails.

STORAGE={YES|NO}
Specifies whether (YES) or not (NO) JES2 provides $HASP095 error code GW3 to inform the operator that $RETWORK macro processing detected that the storage being returned was modified beyond the length specified by its associated $GETWORK macro invocation.

SYMREC={YES|NO}
Specifies whether (YES) or not (NO) JES2 should issue the $HASP805 message when it invokes the MVS SYMREC service to indicate a possible error.

VERSION={YES|NO}
Specifies whether (YES) or not (NO) JES2 should verify the integrity of a newly created checkpoint version.

Authority Required

This command requires **system** authority. The description of the $T RDRnn command explains how to ensure the proper MVS system command group authority is assigned.

This command requires **control** security access authority. For a description of assigning command input authority, see *z/OS JES2 Initialization and Tuning Guide* .

Processing Considerations

Be aware that if you specify YES for the CKPT, or VERSION parameters in a production environment, these options will affect JES2 performance because there is a noticeable increase in the processor cycles JES2 uses.

By using the DEBUG command with the CKPT, or VERSION parameters, you can detect some incorrect updates resulting from checkpoint serialization programming errors in JES2 modules or installation exits.

Use the DEBUG command, with the CKPT parameter specified, for testing installation exits that update checkpointed information. Some common program errors such as failing to use the $QSUSE macro before updating checkpointed information, or failing to use the $CKPT macro after updating the checkpoint may be found by using CKPT=YES. However, you should not rely on CKPT=YES since timing and the order of events play a large part in surfacing serialization errors.

Scope

Single Member. This command will be in effect for this member only.

However, you might want this command to be applied to all members of the MAS (to ensure a consistent environment across the MAS). If so, you can use the MVS ROUTE *ALL command to issue this command to all active members (if the JES2 command character is the same on all members). See *z/OS MVS System Commands* for more information on using the ROUTE *ALL command.

Messages

The $HASP827 message displays the current setting of the DEBUG option.

Examples

1

```
$t debug=y

$HASP827 DEBUG
$HASP827 DEBUG BERT=YES,CKPT=YES,MISC=YES,
$HASP827 SECURITY=YES,STORAGE=YES,SYMREC=YES,VERSION=YES
```

JES2 monitors all specifiable JES2 activities.

2
```
$T DEBUG,STORAGE=N,MISC=N,SECURITY=Y

  $HASP827 DEBUG  BERT=YES,CKPT=YES,MISC=NO,
  $HASP827        SECURITY=YES,STORAGE=NO,SYMREC=YES,
  $HASP827        VERSION=YES
```

JES2 monitors only CKPT, and VERSION activities.

$T DESTDEF - Control JES2 Symbolic Destination Displays

Function

To control how JES2 displays a destination routed to the local node.

Because SHOWUSER can affect SDSF's security, see *SDSF Guide and Reference* before specifying this parameter.

Syntax

```
►►──$T──DESTDEF──┬──────────────────────────┬──────────────────────────────────────────►◄
                 └─,SHOWUSER=─┬─No──────────┬─┘
                              ├─NOLOCAL─────┤
                              ├─WITH────────┤
                              └─WITHLOCAL───┘
```

Parameters

SHOWUSER={No|NOLOCAL|WITH|WITHLOCAL}
Specifies whether destinations for the local node that have user routines are (WITH or WITHLOCAL) or are not (No or NOLOCAL) to be displayed with a 'LOCAL.' prefix.

No|NOLOCAL
Specifies that JES2 is to display destinations for the local node that contain user routings without the 'LOCAL.' prefix. For example, SYSOUT routed to a TSO/E userid of FRED at the local node will display as 'FRED'.

WITH|WITHLOCAL
Specifies that JES2 is to display destinations for the local node that contain user routings with a prefix of 'LOCAL.' For example, SYSOUT routed to a TSO/E userid of FRED at the local node will display as 'LOCAL.FRED'.

When the DESTDEF initialization statement parameters specify USER, you should specify SHOWUSER=WITHLOCAL to avoid possible confusion between displays of explicit routings and displays of user routings.

Authority Required

This command requires **system** authority. The description of the $T RDRnn command explains how to ensure the proper MVS system command group authority is assigned.

This command requires **control** security access authority. For a description of assigning command input authority, see *z/OS JES2 Initialization and Tuning Guide*.

Scope

Single Member. This command will be in effect for this member only.

Depending on your installation's setup, however, you might want this command to be applied to all members of the MAS (to ensure a consistent environment across the MAS). If so, you can use the MVS ROUTE *ALL command to issue this command to all active members (if the JES2 command character is the same on all members). See *z/OS MVS System Commands* for more information on using the ROUTE *ALL command.

Messages

The $HASP812 message displays the current status of DESTDEF parameters in the installation.

Example

```
1  $t desdtef,showuser=withlocal

$HASP812 DESTDEF  LOCALNUM=9999,NDEST=NODE,RDEST=REMOTE,RMDEST=
$HASP812          REMOTE,RMTDEST=REMOTE,UDEST=SPLOCAL,SHOWUSER=
$HASP812          WITHLOCAL
```

JES2 displays userids at the local node with a prefix of ’LOCAL.’

$T DEStid - Control a JES2 Symbolic Destination

Function

To change the JES2 route code associated with the specified symbolic destination name.

To distinguish between destids that share the same routing, installations should specify PRIMARY=YES for one of them (either on the DESTID(jxxxxxxx) initialization statement or on this command).

For example, the following destids share the same routing. DESTID(JOHN) specifies PRIMARY=YES. JES2 consistently displays the symbolic name JOHN for output routed to this destination.

```
DESTID(REMOTE5) DEST=R5
DESTID(JOHN) DEST=N1.R5,PRIMARY=YES
```

PRIMARY=YES is necessary for application products such as SDSF.

Notes:

1. None of the route codes specified on the DEST= of this command are affected by the DESTDEF initialization statement or the $T DESTDEF command.
2. If any parameters on the DESTDEF initialization statement specify USER and multiple destids can match the routing, then at least one of these multiple destids must specify PRIMARY=YES.

One or more parameters on this command accepts wildcards. Parameter descriptions will note that.

Syntax

```
►►──$T──DEStid──┬─'xxxxxxxx'──────────────────┬──┬──────────────────────────────────►
                │   ┌──────────────────┐      │  │ Selection limiting keywords │
                │   ▼                  │      │  │
                └─(──┬─xxxxxxxx──┬──┬──)──────┘  │
                     └─'xxxxxxxx'─┘  │          │
                                     │          │
►──┬──────────────────────────────────┴──────────┴──────────────────────────────────►◄
  │ Modification keywords │
```

Modification keywords:

```
├──┬──────────────────────────────┬──┬──────────────────────────────┬──────────────┤
   │ ,DEST=──┬─nodename──┬──┬──────┘  │ ,PRIMARY=──┬─No──┬──┬──────┘
   │         └─Nnnnn─────┘  │         │            └─Yes─┘  │
```

Selection limiting keywords:

```
├──┬──────────────────────────────────────────────────────────────────────────────┤
   │ ,──/──PRIMARY──┬─=──┬──┬─No──┬──┬──────┘
   │                └─^=─┘  └─Yes─┘  │
```

Parameters

xxxxxxxx
Specifies the 1 to 8 alphanumeric or special ($, #, or @) character symbolic

destination name affected by this statement. You may specify a particular symbolic destination name or wildcards for a generic name (for example, POK* or *). See “Using Wildcards” on page 93 for additional information.

DEST={nodename|Nnnnn}
Specifies a route code JES2 can use to route data.

When specifying only the node (first-level destination):

nodename|Nnnnn
References only the nodal portion (first-level destination) of a JES2 route code.

nodename
Specify a symbolic node name. For example, if NODE(10) is defined with NAME=ALBANY on the NODE(nnnn) initialization statement, then an installation can create a DESTID(NYCAP) with DEST=ALBANY.

Nnnnn
Specify N followed by a numeric value (1-32767). For example, DESTID(NYCAP),DEST=N10.

When specifying only the destination at a node (second-level destination):

LOCAL|ANYLOCAL|Rmmmm|RMmmmm|RMTmmmm|Unnnn|userid
References only the destination at a node (second-level destinations).

When these destids are referenced, users must specify either an explicit first-level destination or allow JES2 to assign a default first-level destination. JES2 determines the first-level destination from one of the following:

- /*ROUTE PRT JES2 control statement
- /*ROUTE PUN JES2 control statement
- The output route code associated with the device through which the job entered the system.

For example, DESTID(REMOTE5),DEST=R5 defines a second-level destination. Using the destids DESTID(NYCAP) DEST=ALBANY and DESTID(NYCAP) DEST=N10 as specified on DESTID(jxxxxxxx) initialization statements, JCL can route a data set to R5 at N10 by specifying DEST=NYCAP.REMOTE5.

However, if the JCL only specifies DEST=REMOTE5, the nodal portion of the destination is obtained from the default routing of the job. (A job submitted from N10 without any /*ROUTE JES2 control statements has a default nodal routing of N10, regardless of where in the network it executes.)

Valid destinations:

LOCAL|ANYLOCAL
Data is not associated with any specific routing.

Rmmmm|RMmmmm|RMTmmmm
Specify R, RM, or RMT, followed by a numeric value (0 - 32767). For example, ‘R17’ represents remote work station 17.

Unnnn
Specify U followed by a numeric value that can range from 1

through the value specified on the LOCALNUM= parameter of the DESTDEF initialization statement. For example, ‘U19’ represents special local routing 19. Wildcards are not supported.

Use the LOCALNUM= parameter on the DESTDEF initialization statement to specify the highest number for a special local route code. JES2 assumes that numbers beyond this range are userids.

userid Specify a 1 to 8 character string that is interpreted on the destination node. For example, the string ‘TANYA’ represents a userid (assuming that there are no destids that define TANYA at the destination node).

When specifying both the node and a destination at that node (first and second level destinations):

NnnnnRmmmm|node.destination
Allows an installation to define the complete JES2 route code (destination at a specified node). JES2 does not use information from the default routing.

NnnnnRmmmm
Specify ‘N’ followed by a numeric value (1 - 32767), then ‘R’ followed by a numeric value (0 - 32767). For example, N5R7 indicates remote 7 at node 5.

node.destination
Specify a first-level destination, followed by a period (.), followed by either a second-level destination or a complete destination.

If ‘destination’ is a second-level destination, the routing associated with this destid is the composite of ‘node’ and ‘destination’.

For the following examples, assume that node 1 is the local node:

- ‘N1.R3’ indicates data routed to remote 3 at the local node.
- ‘N2.R5’ indicates data routed to whatever ‘R5’ is at node 2.
- ‘N5.BOB’ indicates data is routed to whatever ‘BOB’ is at node 5.

If ‘destination’ is a complete destination, the final routing associated with this destid depends on ‘node’.

For the following examples, assume that node 1 is the local node:

- ‘N2.N2R3’ indicates data routed to remote 3 at node 2 because the first-level destination of ‘destination’ matches ‘node’.
- ‘N5.N2R3’ indicates data routed to ‘N2R3’ at node 5 because the first-level destination of ‘destination’ does not match ‘node’ and ‘node’ is not the local node. If node 5 has not explicitly defined ‘N2R3’, node 5 routes the data to destination ‘R3’ at node 2.

- ‘N1.N5R3’ results in an error because the first-level destination of ‘destination’ does not match ‘node’ and ‘node’ is the local node.

Note that you can use existing destids to define additional destids. For example, assume that the following destids are defined:

```
DESTID(ALBANY)  DEST=N10
DESTID(REMOTE5) DEST=R5
```

You can define on the $T DESTID(jxxxxxxx) command:

```
DESTID(CAPITOL),DEST=ALBANY.REMOTE5
```

The routing associated with ‘CAPITOL’ is N10.R5.

PRIMARY={No|Yes}
Specifies whether (YES) or not (NO) this destid for job and SYSOUT routing is to be displayed. Use this parameter if multiple destids have the same routing.

When searching for a destid to display for a job’s or SYSOUT’s routing, JES2 selects:
1. Node name (destid with STATUS=NODENAME) if routed to a node.
2. First destid found that specifies PRIMARY=YES.
3. If only one destid is found, that destid is used.
4. If multiple destids are found, no destid is used (and routing is displayed explicitly).

If USER is specified for either the Ndest=, Udest=, or R|RM|RMTdest= parameters on the DESTDEF initialization statement and multiple destids can match the routing of a job or SYSOUT data set, then at least one of these multiple destids must specify PRIMARY=YES. If not, products such as SDSF may have problems altering the routing of a job or SYSOUT data set to any of these multiply defined destids.

Because PRIMARY=YES can affect SDSF’s security procedures, consult *SDSF Guide and Reference* before using this parameter.

Authority Required

This command requires **system** authority. The description of the $T RDRnn command explains how to ensure that the proper MVS system command group authority is assigned.

This command requires **control** security access authority. For a description of assigning command input authority, see *z/OS JES2 Initialization and Tuning Guide*.

Processing Considerations

You cannot alter a destid that is a node name (STATUS=DESTID). (Use the $D DESTID command to display the status of a destid). Change the node name first (to make it inactive) through the $T NODE(nnnn),NAME= command, then change the destid.

Scope

Single Member. This command will be in effect for this member only.

Depending on your installation’s setup, however, you might want this command to be applied to all members of the MAS (to ensure a consistent environment across

the MAS). If so, you can use the MVS ROUTE *ALL command to issue this command to all active members (if the JES2 command character is the same on all members). See *z/OS MVS System Commands* for more information on using the ROUTE *ALL command.

Messages

The $HASP822 message displays the current values of all the parameters on the DEStid initialization statement.

Examples

1 `$t destid(houston),dest=n3`

```
$HASP822 DESTID(HOUSTON)   DEST=N3,STATUS=DESTID,PRIMARY=NO
```

Users and operators can use the symbolic destination name “HOUSTON” to refer to any local device at node 3. The STATUS= keyword indicates that the symbolic name HOUSTON does not match the name of a node.

2

In the installation described for example 2, JES2 displays multiple destid‘s with a DEST= routing of special local ’U3’.

```
$d destid(*),dest,primary
  $HASP822 DESTID(CLW2Z18)   DEST=N1.U3,PRIMARY=NO
  $HASP822 DESTID(JPK2Z37)   DEST=N1.U3,PRIMARY=NO
  $HASP822 DESTID(RMJ2AA18)  DEST=N1.U3,PRIMARY=NO
  $HASP822 DESTID(SJG2Z19)   DEST=U3,PRIMARY=NO
```

Note that without specifying ‘PRIMARY=YES’ on any of the above, the SYSOUT is displayed (through the $L J command below) with the explicit route code, not with a DESTID:

```
$DO j55,all

  $HASP686 OUTPUT(NEWJOBS)   OUTGRP=1.1.1,BURST=NO,FCB=****,
  $HASP686                   FLASH=****,FORMS=STD,HOLD=(NONE),
  $HASP686                   HOLDRC=,OUTDISP=KEEP,PAGES=,
  $HASP686                   PRIORITY=144,PRMODE=LINE,QUEUE=X,
  $HASP686                   RECORDS=(72 OF 72),ROUTECDE=U3
  $HASP686                   SECLABEL=SYSHIGH,TSOAVAIL=YES,UCS=****,
  $HASP686                   USERID=BERNER,WRITER=

$t destid(cam2x37),dest=u3,primary=yes

$HASP822 DESTID(CAM2X37)   DEST=U3,STATUS=DESTID,PRIMARY=YES
```

Users and operators can use the symbolic destination name “CAM2X37” to refer to the special local printer at U3. The STATUS= keyword displayed in the $HASP822 message indicates that the symbolic name CAM2X37 does not match the name of a node.

Note that by specifying PRIMARY=YES, JES2 displays the SYSOUT (through the $L J command) with the destid ‘CAM2X37’ as the destination for the SYSOUT:

```
$DO j55,all

  $HASP686 OUTPUT(NEWJOBS)   OUTGRP=1.1.1,BURST=NO,FCB=****,
  $HASP686                   FLASH=****,FORMS=STD,HOLD=(NONE),
  $HASP686                   HOLDRC=,OUTDISP=KEEP,PAGES=,
  $HASP686                   PRIORITY=144,PRMODE=LINE,QUEUE=X,
```

```
$HASP686                    RECORDS=(72 OF 72),ROUTECDE=CAM2X37
$HASP686                    SECLABEL=SYSHIGH,TSOAVAIL=YES,UCS=****,
$HASP686                    USERID=BERNER,WRITER=
```

$T ESTBYTE - Control the Default Spool Space Utilization Per Job

Function

To specify the default amount of spool space needed for a job's output and the action that JES2 takes if the output exceeds this amount.

Syntax

```
►►──$T──ESTBYTE──┬──────────────┬──┬──────────────┬──┬──────────────────┬──────────────────────────────────►◄
                 └,INT=nnnnn────┘  └,NUM=nnnnn────┘  └,OPT=──┬─0─┬──┘
                                                             ├─1─┤
                                                             └─2─┘
```

Parameters

INT=nnnnn
The interval (1-99999), in thousands of bytes of spool space, at which JES2 repeats the $HASP375 message to the operator.

NUM=nnnnn
The number (1-99999) of bytes of spool space, in thousands, used by a job's output, after which the $HASP375 message informs the operator that the job's estimated output has been exceeded.

OPT={0|1|2}
Specifies the action JES2 takes when a job exceeds the estimated spool utilization value as specified by the NUM= parameter. The options and subsequent action are:

0 Job is allowed to continue execution.
1 Job is cancelled without a dump.
2 Job is cancelled with a dump (if a dump statement was coded for this job step).

Authority Required

This command requires **system** authority. The description of the $T RDRnn command explains how to ensure the proper MVS system command group authority is assigned.

This command requires **control** security access authority. For a description of assigning command input authority, see *z/OS JES2 Initialization and Tuning Guide*.

Processing Considerations

This command affects only those jobs that have not yet been selected for execution.

Scope

Single Member. This command will be in effect for this member only.

Depending on your installation's setup, however, you might want this command to be applied to all members of the MAS (to ensure a consistent environment across the MAS). If so, you can use the MVS ROUTE *ALL command to issue this command to all active members (if the JES2 command character is the same on all members). See *z/OS MVS System Commands* for more information on using the ROUTE *ALL command.

Messages

The $HASP845 message displays the current values of all the parameters on the ESTBYTE initialization statement.

Example

```
1  $t estbyte,num=4500,int=300

$HASP845 ESTBYTE NUM=4500,INT=300,OPT=0
```

If a job's output exceeds 4,500,000 bytes of spool space, JES2 issues the $HASP375 message to inform the operator that the job's output has been exceeded. JES2 reissues this message each time the job exceeds another 300,000 bytes until the job finishes execution.

$T ESTIME - Control the Default Execution Time

Function

To specify the default execution time for jobs that have not yet been selected for execution and the action that JES2 takes if a job exceeds this time.

Syntax

```
►►──$T──ESTIME──┬──────────────┬──┬──────────────┬──┬──────────────────────────┬──────────────────────────────►◄
                └─,INT=nn──────┘  └─,NUM=nnnn────┘  └─,OPT=──┬──No──┬──┬──────┬──┘
                                                             └──Yes─┘  └──────┘
```

Parameters

INT=nn
The interval (1-99), in minutes, at which JES2 repeats the $HASP308 message to the operator.

NUM=nnnn
The default execution time (1-9999), in minutes, after which the $HASP308 message informs the operator that the job has exceeded its estimated execution time.

OPT={No|Yes}
Specifies whether or not you want to use the JES2 elapsed time monitor feature. If you specify Y, JES2 issues the $HASP308 message as specified on the NUM= and INT= parameters. JES2 does not issue the $HASP308 message if you specify N.

Authority Required

This command requires **system** authority. The description of the $T RDRnn command explains how to ensure the proper MVS system command group authority is assigned.

This command requires **control** security access authority. For a description of assigning command input authority, see *z/OS JES2 Initialization and Tuning Guide*.

Scope

Single Member. This command will be in effect for this member only.

Depending on your installation's setup, however, you might want this command to be applied to all members of the MAS (to ensure a consistent environment across the MAS). If so, you can use the MVS ROUTE *ALL command to issue this command to all active members (if the JES2 command character is the same on all members). See *z/OS MVS System Commands* for more information on using the ROUTE *ALL command.

Messages

The $HASP845 message displays the current values of all the parameters on the ESTIME initialization statement.

Example

1 `$t estime,num=120`

```
$HASP845 ESTIME NUM=120,INT=10,OPT=YES
```

JES2 assigns a default execution time of 120 minutes to jobs that have not yet been selected for execution. If a job exceeds 120 minutes, JES2 issues the $HASP308 message every 10 minutes until the job completes execution.

$T ESTLNCT - Control the Default Print Line Count Per Job

Function

To specify the default print line count for a job's output and the action JES2 takes if a job exceeds this line count.

Syntax

```
►►──$T──ESTLNCT──┬──────────────────┬──┬──────────────┬──┬──────────────────┬──────────────────────────────►◄
                 └─,INT=nnnnnnn─────┘  └─,NUM=nnnn────┘  └─,OPT=──┬─0─┬──┘
                                                                  ├─1─┤
                                                                  └─2─┘
```

Parameters

INT=nnnnnnn
The interval (1-9999999), in lines, at which JES2 repeats the $HASP375 message to the operator.

NUM=nnnn
The default print line count (1-9999), in thousands of lines, after which the $HASP375 message informs the operator that the job has exceeded its estimated output.

OPT={0|1|2}
Specifies the action JES2 takes when a job exceeds the estimated number of output lines as specified by the NUM= parameter. The options and subsequent action are:

0 Job is allowed to continue execution.
1 Job is cancelled without a dump.
2 Job is cancelled with a dump (if a dump was coded for this job step).

Authority Required

This command requires **system** authority. The description of the $T RDRnn command explains how to ensure the proper MVS system command group authority is assigned.

This command requires **control** security access authority. For a description of assigning command input authority, see *z/OS JES2 Initialization and Tuning Guide*.

Processing Considerations

This command affects only those jobs that have not yet been selected for execution.

Scope

Single Member. This command will be in effect for this member only.

Depending on your installation's setup, however, you might want this command to be applied to all members of the MAS (to ensure a consistent environment across the MAS). If so, you can use the MVS ROUTE *ALL command to issue this command to all active members (if the JES2 command character is the same on all members). See *z/OS MVS System Commands* for more information on using the ROUTE *ALL command.

Messages

The $HASP845 message displays the current values of all parameters on the ESTLNCT initialization statement.

Example

```
1  $t estlnct,opt=1

$HASP845 ESTLNCT NUM=50,INT=1000,OPT=1
```

If a job that has not yet been selected for execution exceeds 50,000 print lines (NUM=50) during its execution, JES2 cancels the job without a dump.

$T ESTPAGE - Control the Default Page Count Per Job

Function

To specify the default page count for a job's output and the action JES2 takes if a job exceeds this page count.

Syntax

```
►►──$T──ESTPAGE──┬──────────────────┬──┬──────────────────┬──┬──────────────────┬──────────────────────────────────►◄
                 └─,INT=nnnnnn──────┘  └─,NUM=nnnnnn──────┘  └─,OPT=──┬─0─┬──┘
                                                                      ├─1─┤
                                                                      └─2─┘
```

Parameters

INT=nnnnnn
The interval (1-999999), in number of pages, at which JES2 repeats the $HASP375 message to the operator.

NUM=nnnnnn
The number of pages (1-999999) produced for a job after which the $HASP375 message informs the operator that the job's estimated output has been exceeded.

OPT={0|1|2}
Specifies the action JES2 takes when a job exceeds the estimated page output as specified by the NUM= parameter. The options and subsequent action are:

0 Job is allowed to continue execution.
1 Job is cancelled without a dump.
2 Job is cancelled with a dump (if a dump statement was coded for this job step).

Authority Required

This command requires **system** authority. The description of the $T RDRnn command explains how to ensure the proper MVS system command group authority is assigned.

This command requires **control** security access authority. For a description of assigning command input authority, see *z/OS JES2 Initialization and Tuning Guide*.

Processing Considerations

This command affects only those jobs that have not yet been selected for execution.

Scope

Single Member. This command will be in effect for this member only.

Depending on your installation's setup, however, you might want this command to be applied to all members of the MAS (to ensure a consistent environment across the MAS). If so, you can use the MVS ROUTE *ALL command to issue this command to all active members (if the JES2 command character is the same on all members). See *z/OS MVS System Commands* for more information on using the ROUTE *ALL command.

Messages

The $HASP845 message displays the current values of all the parameters on the ESTPAGE initialization statement.

Example

```
1  $t estpage,int=10

$HASP845 ESTPAGE NUM=200,INT=10,OPT=0
```

If a job that has not yet been selected for execution exceeds 200 pages of output (NUM=200) during its execution, the $HASP375 message informs the operator that the job's estimated output has been exceeded. JES2 repeats the $HASP375 message to the operator every 10 pages that exceed the estimated page output (200 pages) until the job completes execution.

$T ESTPUN - Control the Default Punched Card Output Per Job

Function

To specify the default number of punched cards per job and the action JES2 takes if a job exceeds this punched card amount.

Syntax

```
►►──$T──ESTPUN──┬──────────────────┬──┬──────────────────┬──┬──────────────────┬──────────────────────────────────►◄
                └─,INT=nnnnnnn─────┘  └─,NUM=nnnnnnn─────┘  └─,OPT=──┬─0─┬──┘
                                                                     ├─1─┤
                                                                     └─2─┘
```

Parameters

INT=nnnnnnn
The interval (1-9999999), in cards, at which JES2 repeats the $HASP375 message to the operator.

NUM=nnnnnnn
The default punched output (0-9999999), in cards, for a job after which the $HASP375 message informs the operator that the job has exceeded its estimated output.

OPT={0|1|2}
Specifies the action JES2 takes when a job exceeds the estimated number of cards as specified by the NUM= parameter. The options and subsequent action are:

0 Job is allowed to continue execution.
1 Job is cancelled without a dump.
2 Job is cancelled with a dump (if a dump statement was coded for this job step).

Authority Required

This command requires **system** authority. The description of the $T RDRnn command explains how to ensure the proper MVS system command group authority is assigned.

This command requires **control** security access authority. For a description of assigning command input authority, see *z/OS JES2 Initialization and Tuning Guide*.

Processing Considerations

This command affects only those jobs that have not yet been selected for execution.

Scope

Single Member. This command will be in effect for this member only.

Depending on your installation's setup, however, you might want this command to be applied to all members of the MAS (to ensure a consistent environment across the MAS). If so, you can use the MVS ROUTE *ALL command to issue this command to all active members (if the JES2 command character is the same on all members). See *z/OS MVS System Commands* for more information on using the ROUTE *ALL command.

Messages

The $HASP845 message displays the current values of all the parameters on the ESTPUN initialization statement.

Example

```
1  $t estpun,opt=0

$HASP845 ESTPUN NUM=3000,INT=100,OPT=0
```

If a job that has not yet been selected for execution, exceeds 3000 punched cards while executing, JES2 allows it to continue execution.

$T EXIT(nn) - Control JES2 Installation Exit Points

Function

To control the invocation and tracing of JES2 installation exit points.

Syntax

```
►►──$T──EXIT──┬─nn──┬──────────────┬──┬──────────────────────────────────────►
              │     └─-──┬─nn─┬─┘  │  └─┤ Selection limiting keywords ├─┘
              │          └─*──┘    │
              │   ┌──────────────┐ │
              │   ▼              │ │
              └──(──┬─nn─┬──┬──────┴──┬─)─┘
                    └─*──┘  └─-──┬─nn─┬─┘
                                 └─*──┘

►──┬──────────────────────────────────────────────────────────────────────────►◄
   └─┤ Modification keywords ├─┘
```

Modification keywords:

```
├──┬──────────────────────────────────────────────────────────────────────────┤
   │ ┌──────────┐  ┌─────────┐  ┌──────────────────────────┐  ┌──────────────┐
   └─┤,DISABLE├──┘  └,ENABLE├──┘  └,STATUS=──┬─DISABLED─┬──┘  └,TRace=──┬─No──┬──┘
                                             └─ENABLED──┘                └─Yes─┘
```

Selection limiting keywords:

```
├──┬──────────────────────────────────────────────────────────────────────────┤
   │ ┌──────────────────────────────────────┐  ┌──────────────────────────┐
   └─┤,──/──STATUS──┬─=──┬──┬─DISABLED─┬──┘  └,──/──TRace──┬─=──┬──┬─No──┬──┘
                    └─^=─┘  └─ENABLED──┘                    └─^=─┘  └─Yes─┘
```

Parameters

nn The subscript defining the exit point(s) affected by this command. The subscript can specify a numeric value or a range of values. For information about specifying a range of values for this subscript, see “Syntax Conventions” at the front of this chapter.

STATUS={DISABLED|ENABLED}
Specifies the status of the JES2 exit point(s).

DISABLED
JES2 does not invoke any exit routines at this exit point.

ENABLED
JES2 invokes the exit routines at this exit point providing the job being processed is eligible to use the exit.

TRace={No|Yes}
Specifies whether or not the specified exit point(s) are to be traced.

Note: Trace ID 13 must be activated for tracing to occur for any JES2 exit point. Individual trace IDs can be activated either during initialization on the TRACE(n) initialization statement, or using the $S TRACE(n) command.

Authority Required

This command requires **system** authority. The description of the $T RDRnn command explains how to ensure the proper MVS system command group authority is assigned.

This command requires **control** security access authority. For a description of assigning command input authority, see *z/OS JES2 Initialization and Tuning Guide*.

Scope

Single Member. This command will be in effect for this member only.

Depending on your installation's setup, however, you might want this command to be applied to all members of the MAS (to ensure a consistent environment across the MAS). If so, you can use the MVS ROUTE *ALL command to issue this command to all active members (if the JES2 command character is the same on all members). See *z/OS MVS System Commands* for more information on using the ROUTE *ALL command.

Messages

The $HASP823 message displays the current values of all the parameters on the EXIT(nnn) initialization statement.

Example

```
1  $t exit(30),status=enabled

$HASP823 EXIT(30) STATUS=ENABLED,ROUTINES=(PRTPROC),TRACE=YES,
         USECOUNT=0
```

JES2 invokes the exit routine named PRTPROC at exit point (30) providing the job being processed is eligible to use exit(30). In the $HASP823 message, USECOUNT=0 indicates no processors are using the exit point at this time.

$T FSS - Control a Functional Subsystem

Function

To specify the characteristics of a JES2 functional subsystem.

One or more parameters on this command accepts wildcards. Parameter descriptions will note that.

Syntax

```
►►──$T──┬─FSS────┬──┬─'acccccc'──────────────────────────────────────────►
        └─FSSDef─┘  │                                                    │
                    │   ┌──────────┐                                     │
                    │   ▼          │                                     │
                    └─(────acccccc─┴──────────────)──┬─Selection limiting keywords─┬──►
                          └─'acccccc'─┘              │                             │
                                                     └─────────────────────────────┘

►──┬─Modification keywords─┬──────────────────────────────────────────►◄
   └───────────────────────┘
```

Modification keywords:

```
├──┬─,AUTOstop=──┬─No──┬──┬─,HASPFSSM=──┬─HASPFSSM─┬──┬─,PROC=acccccc─┬──────────┤
   │             └─Yes─┘  │             └─acccccc──┘  │               │
```

Selection limiting keywords:

```
├──┬─,──/──AUTOstop──┬─=──┬─No──┬──┬─,──/──HASPFSSM──┬─=──────┬─=HASPFSSM─┬──►
   │                 └─^=─┘  └─Yes─┘  │               ├─^=─────┤  └─acccccc──┘
                                      │               ├─>──────┤
                                      │               └─<──────┘

►──┬─,──/──PROC──┬─=──┬─acccccc─┬──────────┤
   │             ├─^=─┤         │
   │             ├─>──┤         │
   │             └─<──┘         │
```

Parameters

(acccccc|ac*|*)
The 1 to 8 character subscript naming the functional subsystem(s) affected by this command. You may specify either a particular FSS name (for example, MYFSS) or wildcards to specify a generic name (for example, FSS* or *). See “Using Wildcards” on page 93 for additional information.

AUTOstop={No|Yes}
Specifies whether or not JES2 is to automatically stop the FSS address space when all devices attached to the FSS are drained.

HASPFSSM={acccccc|HASPFSSM}
The 1 to 8 character name of the load module that is loaded into the functional subsystem address space. This load module contains the various JES2-supplied FSI service routines.

PROC=acccccc
The 1 to 8 character name of the procedure in SYS1.PROCLIB that contains the JCL required to start the functional subsystem.

Authority Required

This command requires **system** authority. The description of the $T RDRnn command explains how to ensure the proper MVS system command group authority is assigned.

This command requires **control** security access authority. For a description of assigning command input authority, see *z/OS JES2 Initialization and Tuning Guide*.

Processing Considerations

If the FSS address space defined by this FSS is active, you can change the AUTOSTOP option but you may not change the other specifications.

Scope

Single Member. This command will be in effect for this member only. There is no need to have this command issued to all members of the MAS.

Messages

The $HASP824 message displays the current values of all the parameters on the FSS initialization statement.

Example

```
1  $t fss(quikprt) haspfssm=fssmtest

$HASP824 FSS(QUIKPRT) PROC=MYPROC,HASPFSSM=FSSMTEST,
         AUTOSTOP=NO
```

JES2 loads the FSSMTEST load module into the QUIKPRT FSS address space when the first printer assigned to that FSS is started.

$T Init - Control Initiators

Function

To control initiators

Syntax

```
►►──$T──┬─I────┬──┬──────────────────────────────────────────────────────────────────────►
        └─Init─┘  │ ┌─nn──────────────────────────┐ │ ┌─┤ Selection limiting keywords ├─┐
                  │ │                             │ │ │                                   │
                  │ │                             │ │ │                                   │
                  │ │                             │ │ │                                   │
```

ACTIVE JES2 is using the initiator for job processing and will continue to do as long as jobs are both available and eligible for the device.

DRAINED JES2 does not use the initiator until you start it with a $S command.

DRAINING JES2 is using the initiator to process jobs, but will stop using this device once the current function has completed.

HALTED JES2 has either requested operator assistance or an operator has entered the $Z command to halt the initiator. To start the initiator, you must enter a $S command.

HALTING The initiator is transitioning to a HALTED state.

INACTIVE JES2 is not using the initiator, but would do so if a job were both available and eligible for the initiator.

RESTARTING The initiator has terminated abnormally and is in the process of restarting automatically.

STARTING The initiator is being started. Applies to FSS-owned devices only.

STC=stc
The initiator associated with the specific STC that is to be controlled.

Authority Required

This command requires **device** and **system** authority. The description of the $T RDRnn command explains how to ensure the proper MVS system command group authority is assigned. The $T NODE(nnnn) command sets the command authority for a node.

This command requires **update** security access authority. For a description of assigning command input authority, see *z/OS JES2 Initialization and Tuning Guide*.

Processing Considerations

The $T INTRDR command affects all internal readers generated and can not be used to control a single internal reader.

Scope

Single Member. The values supplied for this command will be in effect for this member only.

Depending on your installation's setup, however, you might want this command to be applied to all members of the MAS (to ensure a consistent environment across the MAS). If so, you can use the MVS ROUTE *ALL command to issue this command to all active members (if the JES2 command character is the same on all members). See *z/OS MVS System Commands* for more information on using the ROUTE *ALL command.

Messages

The $HASP892 message displays the characteristics of internal readers and their current characteristics.

Examples

1 `$t i1,c=abcde`

```
$HASP892 INIT(1)    STATUS=INACTIVE,CLASS=ABCDE,NAME=1,ASID=0017
```

Initiator 1 is modified to select work from job classes A, B, C, D, and E

2 `$ti 2,c=VWXYZ`

```
$HASP892 INIT(2)    STATUS=INACTIVE,CLASS=XYZ,
$HASP892            INELIGIBLE_CLASS=(V-HELD,W-WLM),NAME=2,
$HASP892            ASID=0018
```

Initiator 2 is modified to select work from job classes V, W, X, Y, and Z. In this case, class V will not be selected because it is held (via JOBCLASS(V) QHELD=Y) and class W will not be selected because the job class is WLM-managed (via JOBCLASS(w) MODE=WLM).

$T INTRDR - Control Internal Readers

Function

- To assign command authority for internal readers
- To specify a default job class and/or affinity for jobs read by internal readers
- To hold all jobs read by internal readers
- To start or stop tracing of the JES2 processor associated with internal readers.

Syntax

```
►►──$T──INTRDR──┬──────────────────────────────┬──┬──────────────────────────────┬──►◄
                └┤ Selection limiting keywords ├┘  └┤ Modification keywords ├┘
```

Modification keywords:

```
├──┬──────────────────────────────────────────────────────────────┬──┬──────────────┬──┬──────────────┬──┬──────────────┬──►
   │                  ┌──────────────────────────────────┐        │  │ ,Class=class │  │              │  │              │
   │                  │                                  │        │  │              │  │ ,Hold=──┬No┬─┬─┬──┬──┬──
```

Auth
The command authority for internal readers, that is, the JES2 command groups that the reader is authorized to enter.

DEVICE={No|Yes}
Specifies whether the commands that have the authority to affect devices can enter the system from the internal readers.

Job={No|Yes}
Specifies whether the commands that have the authority to affect jobs can enter the system from the internal readers.

System={No|Yes}
Specifies whether the commands that have the authority to affect system resources can enter the system from the internal readers.

This parameter affects JES2 command statements only. Use the AUTH parameter of the JOBCLASS initialization statement to specify the authorization for JCL command statements. JES2 command statements begin with /* in columns 1 and 2. JCL command statements begin with // in columns 1 and 2.

Notes:

1. A reader may not be used to set the command authority for any local reader device. The $T INTRDR,AUTH command can be issued only by a console with device and system authority.
2. The command authorities that are set only operate on JES2 commands; they do not apply to MVS commands.

CLASS=class
The default execution class (A-Z, 0-9) for jobs that are read by internal readers and that do not have a job class specified on the JOB statement.

Note: If you specify this parameter, the command requires device authority.

Hold|H={No|Yes}
Specifies whether (Y) or not (N) all jobs submitted through internal readers are to be held after JCL conversion. You can release these jobs on an individual basis using the $A command.

HONORlim|HONOR={No|Yes}
Specifies whether (Y) or not (N) data sets sent to the internal reader are to be counted toward the byte limit for a job.

PRTYINC={n-n}
Specifies a number (0-15) to be added to the selection priority of each job entered at this card reader. If the total of this number and a job's priority exceeds the priority level specified by PRIOLIM (described next), JES2 uses the priority level specified by PRIOLIM.

PRTYLIM={n-n}
Specifies the maximum priority level (0-15) that can be assigned to jobs entered at this card reader. Any job that exceeds this priority is reduced to this level.

Sysaff|S
The default affinities assigned to jobs read by internal readers.

ANY
The jobs are eligible to run on any member in the JES2 multi-access spool configuration. If you specify ANY followed by the IND parameter, they must be separated by a comma and the list must be enclosed in parentheses, for example, (ANY,IND).

+ | -
The subsequent IND, and/or *memnames* are to be added to (+) or deleted from (-) the current list of members which are eligible to process these jobs. If neither + nor - is specified, the affinities of the jobs are set explicitly to the specified members.

Note: If you specify IND without any member names (memname), you must specify (+) or (-).

IND
The jobs are added to the list of jobs eligible to run on independent mode processors (+), deleted from the list of jobs eligible to run on independent mode processors (-), or, if neither + nor - is specified, IND affinity must be specified with a member name.

memname|*
The identifier (1 to 4 alphameric characters) of a member in the JES2 multi-access spool configuration that is added to (+), deleted from (-), or explicitly set (neither) as the affinity for jobs read by internal readers. Use an asterisk to specify the member executing the command.

TRace={No|P|Yes}
Specifies whether tracing is to be activated or deactivated for all of the internal readers. This parameter requires system authority.

No
Tracing is disabled.

P|Yes
Tracing is activated if trace IDs 11 and 12 are currently enabled.

Note: Trace IDs 11 and 12 may be enabled either at initialization on the TRACE(n) statement or using the $S TRACE(n) command.

Authority Required

This command requires **device** and **system** authority. The description of the $T RDRnn command explains how to ensure the proper MVS system command group authority is assigned. The $T NODE(nnnn) command sets the command authority for a node.

This command requires **update** security access authority. For a description of assigning command input authority, see *z/OS JES2 Initialization and Tuning Guide*.

Processing Considerations

The $T INTRDR command affects all internal readers generated and can not be used to control a single internal reader.

Scope

Single Member. The values supplied for this command will be in effect for this member only.

Depending on your installation's setup, however, you might want this command to be applied to all members of the MAS (to ensure a consistent environment across the MAS). If so, you can use the MVS ROUTE *ALL command to issue this command to all active members (if the JES2 command character is the same on all members). See *z/OS MVS System Commands* for more information on using the ROUTE *ALL command.

Messages

The $HASP838 message displays the characteristics of internal readers and their current characteristics.

Examples

1 `$t intrdr,sysaff=(n1m1,n1m2),tr=y`

```
$HASP838 INTRDR
         AUTH=(DEVICE=NO,JOB=NO,SYSTEM=NO),BATCH=YES
$HASP838 CLASS=A,HOLD=NO,PRTYINC=0,PRTYLIM=15,RDINUM=2,
$HASP838         SYSAFF=(N1M1,N1M2),TRACE=YES
```

JES2 assigns the affinities of N1M1, and N1M2to all internal readers and activates tracing for the associated JES2 reader processor.

2 `$t intrdr,c=f,s=+ind,sysa`

```
$HASP838 INTRDR
         AUTH=(DEVICE=NO,JOB=NO,SYSTEM=NO),BATCH=YES
$HASP838 CLASS=F,HOLD=YES,PRTYINC=0,PRTYLIM=15,RDINUM=3,
$HASP838         SYSAFF=(IND,SYSA,SYSB),TRACE=NO
```

JES2 assigns execution class F to all jobs submitted through internal readers which do not specify a job class on their JOB statements. In addition, all jobs read by internal readers are eligible to run on members SYSA and SYSB if these members are operating in independent mode.

$T Job - Change a Job's Class, Scheduling Priority, or Affinity

Function

To change the execution class, priority, and/or affinity for the specified job(s).

Syntax

```
►►──$T──┬─Job──┬──┬─nn──┬──────────┬──┬──────────────────────────────────────────────┬──┬─ Selection limiting keywords ─┬──►
        ├─JOBQ─┤  │     └─-──┬─mm─┬─┘  │                                              │  │                               │
        ├─JQ───┤  │           └─*──┘    │                                              │  │                               │
        ├─Stc──┤  ├─'job'──────────────┤                                              │  │                               │
        └─Tsu──┘  │                     │                                              │  │                               │
                  └─(──┬──────────────┬──┬─nn─┬──┬──────────┬──┬─mm─┬──┬──────────┬──)─┘  │                               │
                       │              │  │ *  │  │          │  │    │  │          │    │  │                               │
                       │              │  │    │  └─-──┬─mm─┬─┘  │    │  │          │    │  │                               │
                       │              │  │    │       └─*──┘    │    │  │          │    │  │                               │
                       │              │  │    │                 │    │  │          │    │  │                               │
                       │              │  │    │                 │    │  │          │    │  │                               │
                       │              │  │    │                 
```

```
►──┬──────────────────────────────────────────────────────────────────────────────────────────────────────────────────────────────────►
   │ ,──/──Priority──┬─=──┬──priority──┬ │ ,──┬──────┬──Queue──┬─=──┬──┬──CNV────┬ │
   │                 │    │            │ │    │ /    │         │    │  │ INPUT   │ │
   │                 │ ¬= │            │ │    └──────┘         │ ¬= │  │ OUT     │ │
   │                 │ >  │            │ │                     └────┘  │ PPU     │ │
   │                 │ <  │            │ │                             │ PURGE   │ │
   │                 └────┘            │ │                             │ RCV     │ │
   │                                   │ │                             │ SETUP   │ │
   │                                   │ │                             │ SPIN    │ │
   │                                   │ │                             │ XEQ     │ │
   │                                   │ │                             └─────────┘ │
   └───────────────────────────────────┘ └─────────────────────────────────────────┘

►──┬──────────────────────────────────────────────────────────────────────────────────────────────────────────────────────────────────►
   │ ,──┬──────┬──REBUILD──┬─=──┬──┬──No─────┬ │ ,──/──SCHENV──┬─=──┬──schenv──┬ │
   │    │ /    │           │    │  │ Yes     │ │               │    │          │ │
   │    └──────┘           │ ¬= │  └─────────┘ │               │ ¬= │          │ │
   │                       └────┘              │               │ >  │          │ │
   │                                           │               │ <  │          │ │
   └───────────────────────────────────────────┘               └────┘          └─┘

►──┬──────────────────────────────────────────────────────────────────────────────────────────────────────────────────────────────────►
   │ ,──┬──────┬──SECLABEL──┬─=──┬──seclabel──┬
   │    │ /    │            │    │            │
   │    └──────┘            │ ¬= │            │
   │                        │ >  │            │
   │                        │ <  │            │
   └────────────────────────┘    └────────────┘

►──┬──────────────────────────────────────────────────────────────────────────────────────────────────────────────────────────────────►
   │                                   ┌──────────────────────────────────────────────────────────────────────────────────────────┐
   │                                   │                                                                                          │
   │ ,──┬──┬──┬──────┬──SPL──┬──┬──┬──┬──┬──┬──────┬──%──────────┬──┬──┬──────┬──┬──percent──────────────────────────────────┬──┬──)──┬
   │    │  │  │ /    │       │  │  │  │  │  │ /    │             │  │  │ >    │  │                                           │  │     │
   │    │  │  └──────┘       │  │  │  │  │  └──────┘             │  │  │ <    │  │                                           │  │     │
   │    │  └─────────SPOOL───┘  │  │  │  │  ├──────────Percent────┤  │  └──────┘  │                                           │  │     │
   │    │  │  ┌──────┐         │  │  │  │  │  │ /    │             │  │            │                                           │  │     │
   │    │  │  │ /    │         │  │  │  │  │  └──────┘             │  │            │                                           │  │     │
   │    │  └──┴──────┘         │  │  │  │  ├──────────Tgs──────────┤  │ >  ┬──tgs──┤                                           │  │     │
   │    │                      │  │  │  │  │  ┌──────┐             │  │ <  │       │                                           │  │     │
   │    │                      │  │  │  │  │  │ /    │             │  └────┘       │                                           │  │     │
   │    │                      │  │  │  │  │  └──────┘             │               │                                           │  │     │
   │    │                      │  │  │  │  └──────────Volumes──────┤  │ =  ┬──volume──┬──────────────────────────────────┤  │     │
   │    │                      │  │  │  │  ┌──────┐             │  │ ¬= │          │                                  │  │  │     │
   │    │                      │  │  │  │  │ /    │             │  └────┘          │                                  │  │  │     │
   │    │                      │  │  │  │  └──────┘             │                  │                                  │  │  │     │
   │    │                      │  │  │  │                       │                  │  ┌──────────────────────────┐    │  │  │     │
   │    │                      │  │  │  │                       │                  │  │                          │    │  │  │     │
   │    │                      │  │  │  │                       │                  │  │ ,                        │    │  │  │     │
   │    │                      │  │  │  │                       │                  │  ▼──────────volume──────────┬──┘    │  │  │     │
   │    │                      │  │  │  │                       │                  │  │ (5)                      │       │  │  │     │
   │    │                      │  │  │  │                       │                  └──┴──────────────────────────┴───────┴──┴──┴─────┘
   └────┴──────────────────────┴──┴──┴──┴───────────────────────┴──────────────────────────────────────────────────────────────────┘

►──┬──────────────────────────────────────────────────────────────────────────────────────────────────────────────────────────────────►
   │ ,──/──SRVCLASS──┬─=──┬──srvclass──┬ │ ,──/──Sysaff──┬─=──┬──┬──member──┬──┬──┬──────────────────────┬──┬──┬──┬──┬──┬──
```

combination of them) that can be used to select a subset of jobs whose job name matches this combination of characters (mask).

'job'
The name of the job that is to be changed. This name must appear as coded on the JOB statement and must be enclosed in apostrophes. If more than one job exists with this name, no action is taken.

Job
A Batch job or range of batch jobs is to be changed.

JOBQ|JQ
Specifies *all* jobs, STCs, and TSUs across the MAS for processing.

Stc
A started task or range of started tasks is to be changed.

Tsu
A time-sharing user or range of time-sharing users is to be changed.

Age|DAys<days | Age|DAys>days
Specifies the age of affected jobs in days. Only jobs more (with DAYS>nn) or less (with DAYS<nn) than the specified number of days in age are affected, The days are counted from the current hour.

Class=class
The new class (A-Z and 0-9) that is assigned to the specified job(s). You may not move jobs in the execution-batch-processing class to a non-execution batch processing class and vice versa.

Notes:

1. When changing the job class, be sure the new job class is defined on the member on which the job executes.
2. The class change resulting from this command affects JES2 job scheduling only. If you move a job from class P to class S with this command, the job is eligible for initiators processing class S jobs, and is no longer eligible for class P initiator processing.

   If you enter the command before the job's conversion, the class remains P for conversion purposes, but is then scheduled for an initiator selecting class S jobs.

   If you enter the command after conversion, job attributes determined by class during conversion (for example, default region size) are unchanged, but the job is scheduled for an initiator selecting class S jobs.
3. If these values are modified for a job in execution note that the service class is not changed. If these changes would result in a different service class this takes effect only if the job is restarted. The service class of an executing job can be modified only by explicitly changing the service class.

CMDauth=cmdauth
Only the jobs that can be affected from the specified remote(s) or node(s) will be changed. The valid specifications are:

LOCAL|ANYLOCAL
Only the local devices at the local node can affect the output.

Nnnnn|nodename
Only local devices at the specified node can affect the output.

Rnnnn
Only the specified remote device can affect the output.

NnnnnRnnnn|nodename.Rnnnn
Only the specified remote device at the specified remote node can affect the output.

destid
A destid corresponding to any of the above remote devices.

Note: Specification of the CMDAUTH filter does not override the authority of the console from which the command is issued; both the authority of the console and the specified CMDAUTH filter must match for the job to be affected.

H|Hours=hours
Specifies the age of affected jobs in hours. Only jobs more (with HOURS>nn) or less (with HOURS<nn) than the specified number of hours in age are affected.

HOLD={ALL|ARM|DUP|JOB|NONE}
Only jobs with the specified hold attributes are modified.

ALL
Changes jobs held via the $H A command.

ARM
Changes jobs which are held awaiting a restart via ARM.

DUP
Change jobs held for a duplicate job name.

JOB
Change jobs held via the $H J command, TYPRUN=HOLD, TYPRUN=JCLHOLD, or held due to error.

NONE
Change jobs which are not held.

JOBMASK|JM=jobmask
Specifies 1 to 8 alphanumeric, special ($, #, or @) or wildcard characters (or a combination of them) that can be used to select a subset of jobs whose job name matches this combination of characters (mask). For a description of wildcards, see “Using Wildcards” on page 93.

Notes:

1. This is a positional parameter. Specify this following the job_id (JOB, STC, or TSU) or JOBQ parameter.
2. The JOBMASK parameter is not valid with the *‘jobname’* parameter.

OFFS=(n[,n,n...])|(+n,[n,n...])|(-n,[n,n...])|0
Specifies updates to the archival status of this job. Jobs will be marked as already offloaded for all offload device numbers that were specified and as not offloaded for all offload device numbers not specified.

Specifying **+** or **-** before the offload device number(s) updates offload status of the job for only the specified offload device numbers. Specifying **+** marks the output as offloaded and specifying **-** marks it as not having been offloaded by the specified offload device number(s). Use this option to allow offloading of job(s) that have been already been offloaded or to prevent offloading of jobs by an offload device.

Priority=priority
The new priority (0-15), or the value that is added to (+n) or subtracted from (-n) the present priority for the specified job(s). If the job priority is adjusted to a

value less than zero, zero is assumed. If the priority is adjusted to a value greater than 15, JES2 assigns a maximum priority. This maximum priority is greater than 15, which allows the operator to selectively run jobs at a priority higher than any jobs submitted with a priority of 15.

Notes:

1. Even though a job has been assigned a maximum priority, JES displays the job priority as 15.
2. If these values are modified for a job in execution note that the service class is not changed. If these changes would result in a different service class this takes effect only if the job is restarted. The service class of an executing job can be modified only by explicitly changing the service class.

Queue={CNV|INPUT|OUT|PPU|PURGE|RCV| SETUP|SPIN|XEQ|XMT}
Only jobs on the specified job queue are to be modified.

CNV
Only jobs awaiting conversion are to be modified.

INPUT
Only jobs on the JES2 $INPUT queue are to be modified.

OUT
Only jobs awaiting output processing are to be modified.

PPU
Only jobs awaiting print/punch processing are to be modified.

PURGE
Only jobs awaiting purge processing are to be modified.

RCV
Only jobs on the JES2 $RECEIVE queue are to be modified.

SETUP
Only jobs on the JES2 $SETUP queue are to be modified.

SPIN
Only jobs awaiting spin processing are to be modified.

XEQ
Only jobs awaiting execution are to be modified.

XMT
Only jobs queued for network transmission are to be modified.

REBUILD={No|Yes}
Jobs on the rebuild queue are to be changed (Yes) or not changed (No).

SCHENV=schenv
The operator can specify a default WLM scheduling environment to be associated with all jobs entering the system which do not have a WLM scheduling environment provided in any other way.

Note: If these values are modified for a job in execution note that the service class is not changed. If these changes would result in a different service class this takes effect only if the job is restarted. The service class of an executing job can be modified only by explicitly changing the service class.

SECLABEL=seclabel
Only jobs with the specified security label are to be modified.

SPIN
Indicates that the JESLOG data (JESMSGLG and JESYSMSG data sets) are to be immediately spun off for this job.

Note: The message, `$HASP138 JESLOG SPIN REQUESTED BY OPERATOR` is placed in the JESMSGLG and JESYSMSG data sets. $HASP138 is not placed in the console or SYSLOG.

SPL|SPOOL={Percent|%|Tgs|Volumes}
Only jobs with specific SPOOL characteristics are to be changed:

Percent|%
Only jobs using more (with %>nn) or less (with %<nn) than the specified percentage of the total available spool space are to be changed.

Tgs
Only jobs using more (with Tgs>nn) or less (with Tgs<nn) than the specified number of track groups are to be changed.

Volumes=(v1,v2,...)
Only jobs which have allocated spool space on the specified spool volume(s) are to be changed.

SRVCLASS=srvclass
Change the WLM service class for the job to the specified service class. If the service class keyword is specified without a service class, the job is reclassified. See the MVS RESET command RESUME keyword description for more information.

Sysaff=member
Changes the job's system affinity.

TYPE={JOB|STC|TSU}
Indicates whether only batch jobs (JOB), started tasks (STC), or time-sharing users (TSU) are to be changed.

USERID=userid
Only jobs associated with a specific userid are to be modified.

XEQNode=xeqnode
Only jobs which are destined to execute at the specified node, or which have already executed at the specified node, are to be changed. The node name may be specified using the decimal node number (Nnnnnn) or an EBCDIC node name.

Authority Required

This command requires **job** authority. The description of the $T RDRnn command explains how to ensure the proper MVS system command group authority is assigned.

This command requires **update** security access authority. For a description of assigning command input authority, see *z/OS JES2 Initialization and Tuning Guide*.

Scope

MAS-Wide. This command has an effect across the entire MAS.

Messages

The $HASP890 message displays the current status of the specified job.

The $HASP003 message indicates that the command was improperly specified.

Examples

1
```
$t j3,s=-sysa

JOB00003  $HASP890 JOB(MYJOB)
$HASP890 JOB(MYJOB)     STATUS=(AWAITING EXECUTION),CLASS=A,
$HASP890                PRIORITY=9,SYSAFF=(SYSB,SYSC,SYSD),HOLD=NONE
```

JES2 removes SYSA from the affinities for batch job 3.

2
```
$t j27,s=(+SPL2,IND)

JOB00027  $HASP890 JOB(MYJOB)
$HASP890 JOB(MYJOB)     STATUS=(AWAITING EXECUTION),CLASS=H,
$HASP890                PRIORITY=9,SYSAFF=(IND,SPL2,SPL3),HOLD=(JOB)
```

JES2 adds SPL2 to the affinities for batch job 27, and sets the job to run on an independent mode processor.

3
```
$t j3,c=b,p=+4

JOB00003  $HASP890 JOB(MYJOB)
$HASP890 JOB(MYJOB)     STATUS=(AWAITING EXECUTION),CLASS=B,
$HASP890                PRIORITY=13,SYSAFF=(SYSB,SYSC,SYSD),
$HASP890                HOLD=NONE
```

JES2 changes the class of batch job 3 to class B and increases its priority by 4 (to 13). Note that, if this increase had adjusted the priority to a value greater than 15, JES2 would have assigned a maximum priority to batch job 3.

4
```
$t jq,/userid=ibmuser,/q=xeq,class=d

JOB00022  $HASP890 JOB(IJOB1)
$HASP890 JOB(IJOB1)     STATUS=(EXECUTING/IBM1),CLASS=D,
$HASP890                PRIORITY=9,SYSAFF=(ANY),HOLD=(NONE),
$HASP890                USERID=IBMUSER
```

JES2 modifies all jobs on the execution queue for user IBMUSER to class D.

5
```
$t jq,/q=xeq,/c=a,c=b

JOB00003  $HASP890 JOB(MYJOB)
$HASP890 JOB(MYJOB)     STATUS=(AWAITING EXECUTION),CLASS=B,
$HASP890                PRIORITY=9,SYSAFF=(SYSB,SYSC,SYSD),HOLD=NONE
JOB00009  $HASP890 JOB(MYJOB2)
$HASP890 JOB(MYJOB2)    STATUS=(AWAITING EXECUTION),CLASS=B,
$HASP890                PRIORITY=9,SYSAFF=(SYSB,SYSC,SYSD),HOLD=NONE
```

JES2 modifies all jobs on the class A execution queue to class B.

6
```
$tj37,/age<1,priority=7

JOB00037  $HASP890 JOB(DEST11)
$HASP890 JOB(DEST11)    STATUS=(AWAITING EXECUTION),CLASS=A,
$HASP890                PRIORITY=7,SYSAFF=(ANY),HOLD=(NONE)
```

JES2 changes priority for job 37 if age is less than 1 day.

7

```
        $ts(5),spin
STC00005  $HASP890 JOB(VTAM)
$HASP890 JOB(VTAM)      STATUS=(EXECUTING/IBM1),CLASS=STC,
$HASP890                PRIORITY=15,SYSAFF=(IBM1),HOLD=(NONE)
```

The JESMSGLG (job log) and JESYSMSG (system messages) datasets for STC 5 are spun off. In order for the datasets to be spun off, the job has to be marked as spinnable.

$T JOBCLASS - Set Job Class Characteristics

Function

To modify the characteristics associated with one job, all started task (STC) jobs, or time-sharing user (TSU) classes.

Syntax

```
►►──$T──JOBCLASS──┬─'jobclass'──────────────────────────────────────────────────────────────►
                  │                                                   │ Selection limiting keywords │
                  └─(──┬─jobclass──────┬──┬──────────────────────────┬─)─┘
                       │ ,             │  │ -jobclass               │
                       ├─'jobclass'────┤  ├─-'jobclass'────────────┤
                       └─*─────────────┘  └─-*─────────────────────┘

►──┬─────────────────────────────────────────────────────────────────────────────────────►◄
   │ Modification keywords │
```

Modification keywords:

```
├──┬──────────────────────────┬──┬──────────────────────────────────┬──┬──────────────────────►
   │ ,ACCT=──┬─No──┬──────────│  │ ,AUTH=──┬─ALL──────────────────────│  │ ,BLP=──┬─No──┬──────│
   │         └─Yes─┘          │  │         ├─CONS─────────────────────│  │        └─Yes─┘      │
   │                          │  │         ├─INFO─────────────────────│  │                     │
   │                          │  │         ├─IO───────────────────────│  │                     │
   │                          │  │         └─SYS──────────────────────│  │                     │
   │                          │  │         ┌─,──────────────────────┐│  │                     │
   │                          │  │         │ (1)                    │└─┬─┘                     │
   │                          │  │         └─(──┬─ALL──────────────┬─)─┘  │                     │
   │                          │  │              ├─CONS─────────────┤      │                     │
   │                          │  │              ├─INFO─────────────┤      │                     │
   │                          │  │              ├─IO───────────────┤      │                     │
   │                          │  │              └─SYS──────────────┘      │                     │

►──┬──────────────────────────┬──┬──────────────────────────┬──┬──────────────────────────┬──┬──────────────────────────┬──►
   │ ,COMMAND=──┬─DISPLAY──┬──│  │ ,CONDPURG=──┬─No──┬──────│  │ ,COPY=──┬─No──┬──────│  │ ,HOLD=──┬─No──┬──────│
   │            ├─EXECUTE──┤  │  │             └─Yes─┘      │  │         └─Yes─┘      │  │         └─Yes─┘      │
   │            ├─IGNORE───┤  │  │                          │  │                      │  │                      │
   │            └─VERIFY───┘  │  │                          │  │                      │  │                      │

►──┬──────────────────────────┬──┬──────────────────────────┬──┬──────────────────────────────────────────────┬──►
   │ ,IEFUJP=──┬─No──┬────────│  │ ,IEFUSO=──┬─No──┬────────│  │ JESLOG=──┬─SPIN──────────────────────────────│
   │           └─Yes─┘        │  │           └─Yes─┘        │  │          ├─(──SPIN──┬─+hh:mm──┬─)──────────│
   │                          │  │                          │  │          │          ├─hh:mm───┤            │
   │                          │  │                          │  │          │          ├─nnn─────┤            │
   │                          │  │                          │  │          │          ├─nnnK────┤            │
   │                          │  │                          │  │          │          └─nnnM────┘            │
   │                          │  │                          │  │          ├─SUPPRESS───────────────────────│
   │                          │  │                          │  │          └─NOSPIN─────────────────────────┘

►──┬──────────────────────────┬──┬──────────────────────────┬──┬──────────────────────────┬──┬──────────────────────────┬──►◄
   │ ,JOURNAL=──┬─No──┬───────│  │ ,LOG=──┬─No──┬───────────│  │ ,MODE=──┬─JES─┬──────────│  │ ,MSGCLASS=msgclass───────│
   │            └─Yes─┘       │  │        └─Yes─┘           │  │         └─WLM─┘      │  │                          │
```

```
►─┬──────────────
```

```
►──┬──────────────────────────────────────────────────────────────────────────────────────────────────────────────────────────────────────────────────────────────►
   │ ,──/──JOURNAL──┬─=──┬──┬─No──┬ │ ,──/──LOG──┬─=──┬──┬─No──┬ │ ,──/──MODE──┬─=──┬──┬─JES──┬
   │                │ ^= │  │ Yes │ │            │ ^= │  │ Yes │ │             │ ^= │  │ WLM  │
   │ ,──/──MSGLEVEL──┬─=──┬──)──┬ │ ,──┬──┬──NAME──┬─=──┬──name──┬ │ ,──/──OUTPUT──┬─=──┬──┬─No──┬ │
   │                 │ ^= │     │ │    │  │        │ ^= │        │ │               │ ^= │  │ Yes │ │
   │                 │    │     │ │    │/ │        │ >  │        │ │               │    │  │     │ │
   │                 │    │     │ │    │  │        │ <  │        │ │               │    │  │     │ │
   │ ,──/──PERFORM──┬─=──┬──perform──┬ │ ,──/──PGMRNAME──┬─=──┬──┬─No──┬ │
   │                │ ^= │           │ │                 │ ^= │  │ Yes │ │
   │                │ >  │           │ │                 │    │  │     │ │
   │                │ <  │           │ │                 │    │  │     │ │
   │ ,──/──PROCLIB──┬─=──┬──proclib──┬ │ ,──/──QHELD──┬─=──┬──┬─No──┬ │
   │                │ ^= │           │ │              │ ^= │  │ Yes │ │
   │                │ >  │           │ │              │    │  │     │ │
   │                │ <  │           │ │              │    │  │     │ │
   │ ,──/──RESTART──┬─=──┬──┬─No──┬ │
   │                │ ^= │  │ Yes │ │
   │ ,──/──SCAN──┬─=──┬──┬─No──┬ │ ,──┬──┬──SCHENV──┬─=──┬──schenv──┬ │ ,──/──SWA──┬─=──┬──┬─ABOVE──┬
   │             │ ^= │  │ Yes │ │    │  │          │ ^= │          │ │            │ ^= │  │ BELOW  │
   │             │    │  │     │ │    │/ │          │ >  │          │ │            │    │  │        │
   │             │    │  │     │ │    │  │          │ <  │          │ │            │    │  │        │
   │ ,──/──TIME──┬─=──┬──)──┬ │ ,──/──TYPE26──┬─=──┬──┬─No──┬ │ ,──/──TYPE6──┬─=──┬──┬─No──┬ │
   │             │ ^= │     │ │               │ ^= │  │ Yes │ │              │ ^= │  │ Yes │ │
   │ ,──/──XBM──┬─=──┬──xbm──┬ │ ,──┬──┬──XEQCount─=(──┬──┬──┬──CURrent──┬─=──┬──current──┬──)──┬
   │            │ ^= │       │ │    │  │               │  │  │           │ ^= │           │     │
   │            │ >  │       │ │    │/ │               │  │  │           │ >  │           │     │
   │            │ <  │       │ │    │  │               │  │  │           │ <  │           │     │
   │                                                   │  │  │  ,────────────────────────┐     │
   │                                                   │  │  │  │                        │     │
   │                                                   │  │  │  │                        │     │
   │                                                   │  │  │  │                        │
```

CONS
Console commands.

INFO
Information commands (such as display).

IO Input/output commands.

SYS
System commands.

BLP={No|Yes}
Specifies that either the bypass label processing parameter in the label field of a DD statement is to be ignored (NO) and processed as no label or that bypass label processing is performed as requested (YES) and the label parameter is processed as it appears.

COMMAND={DISPLAY|EXECUTE|IGNORE|VERIFY}
Specifies the disposition of commands read from the input stream as follows.

DISPLAY
The command is displayed and scheduled for execution.

EXECUTE
The command is scheduled for execution.

IGNORE
The command is ignored (that is, interpreted as a ‘no operation’).

VERIFY
Specifies that the system displays the command, asks the operator whether the command should be executed, and if the operator replies “YES”, schedules the command for execution.

CONDPURG={No|Yes}
Specifies whether (YES) or not (NO) system data sets (such as JESMSG and SYSMSG) in this job class are to be conditionally purged.

Note: This is only valid for JOBCLASS(STC) and JOBCLASS(TSU).

COPY={No|Yes}
Displays whether (Yes) or not (No) jobs in this job class are to be queued for output processing as though TYPRUN=COPY was specified on the JOB statement for these jobs.

HOLD={No|Yes}
Specifies that jobs in the job class are to be held (Yes) or queued (No).

This parameter is not allowed on either the JOBCLASS(STC) or JOBCLASS(TSU) initialization statements.

IEFUJP={No|Yes}
Specifies whether (YES) or not (NO) the IEFUJP exit is taken when a started task is purged. IEFUJP receives control when a started task is ready to be purged from the system; that is, after the started task has been ended and all the SYSOUT output that pertains to the started task has been processed.

IEFUSO={No|Yes}
Specifies whether (YES) or not (NO) the IEFUSO installation exit is taken when the SYSOUT limit is reached for a started task in this job class. The SYSOUT limit, which is specified by the OUTLIM parameter on the DD statement, defines the maximum number of physical records to be written to the associated SYSOUT data set. When the OUTLIM value is exceeded, JES2 normally calls

the IEFUSO SMF exit routine either to increase the SYSOUT limit or to end the job. When NO is specified and OUTLIM is exceeded, JES2 abnormally ends the job.

JESLOG=
Specifies for the indicated jobclass that each job's JESLOG data (JESMSGLG and JESYSMSG data sets) is to be spun at a certain time interval, suppressed from being recorded, or not spun at all.

SPIN JESLOG data is to be immediately spun off for jobs in this jobclass.

(SPIN,+hh:mm)
Indicates to spin JESLOG every hh:mm time interval, where hh is hours and has a range of 0 through 23 and, mm is minutes and has a range of 00 through 59.

Note: A minimum of 10 minutes must be specified or an error message occurs. Also, for time intervals of less than one hour, you must specify `JESLOG=(SPIN,+00:mm)`.

(SPIN,hh:mm)
Indicates to spin JESLOG at hh:mm every 24 hours.

(SPIN,nnn)
Indicates to spin JESLOG whenever either JESMSGLG or JESYSMSG has nnn lines. nnn is the number of lines in the data set and has a range of 1 through 999. nnn is specified as nnn, nnnK or nnnM, where 'K' is thousands and 'M' is millions.

Note: A minimum of 500 lines must be specified or an error message occurs.

(SPIN,nnnK)
Indicates to spin JESLOGwhenever either JESMSGLG or JESYSMSG has ″nnnK″ lines.

(SPIN,nnnM)
Indicates to spin JESLOG whenever either JESMSGLG or JESYSMSG has ″nnnM″ lines.

SUPPRESS
Indicates that the JESLOG data sets will have nothing written to them during the execution of jobs defined for this job class. Data will only be written to JESLOG data sets during each job's input service and post execution.

NOSPIN
Indicates that JESLOG data will not be spun, but will not be suppressed. NOSPIN is the default setting for the JOBCLASS(v) initialization statement.

JOURNAL={No|Yes}
Specifies whether (Yes) or not (No) job-related information is to be saved in a job journal.

This parameter is not allowed on either the JOBCLASS(STC) or JOBCLASS(TSU) initialization statements.

LOG={No|Yes}
Specifies whether (YES) or not (NO) the JES2 job log is printed for started tasks. The JES2 job log contains the user's console messages and replies to

WTORs issued during the processing of the job. When NO is specified, the printing of JES2 statistics information (normally printed with the job) is also suppressed.

This parameter is not allowed on either the JOBCLASS(STC) or JOBCLASS(TSU) initialization statements.

MODE={JES|WLM}
Indicates whether jobs in this class are to be run under JES-mode or WLM-mode initiators.

This parameter is not allowed on either the JOBCLASS(STC) or JOBCLASS(TSU) initialization statements.

MSGCLASS=msgclass
Specifies the message class (A-Z,0-9) for started tasks or time-sharing users. Valid only for JOBCLASS(STC) and JOBCLASS(TSU).

MSGLEVEL=statements
Specifies a message level value for use when the MSGLEVEL= parameter is not specified on a JOB statement. If a MSGLEVEL= parameter is not specified, JCL and allocation/termination messages are recorded in the system message data set according to the value specified in this parameter. The character “n” specifies the kinds of JCL listed, as follows:

0 JOB statement only

1 Input statements, cataloged procedure statements, and symbolic parameter substitution values

2 Input statements only, including instream procedures.

The character “m” specifies the kinds of allocation/termination messages listed, as follows:

0 No messages are to be listed, except in the case of an abnormal termination, in which case allocation/termination messages are listed.

1 Allocation/termination messages are listed.

OUTDisp=(normal,abnormal)
Specifies the default disposition of the JES data sets created by jobs in the specified job class(es).

normal
Specifies the output disposition if the job ends successfully. Specify one of the output dispositions below.

abnormal
Specifies the output disposition if the job ends unsuccessfully. Specify one of the output dispositions below.

The valid output dispositions:

H|HOLD
Hold the output. JES2 does not process the output until you either change the disposition to WRITE or KEEP, or release the output. When the output is released, the disposition changes to WRITE.

K|KEEP
Process the output and then keep a copy of it on spool. After processing, the disposition of this output becomes LEAVE.

L|LEAVE
JES2 does not process the output until you change the disposition to WRITE or KEEP, or release the output. Once the output is released, the disposition changes to KEEP.

P|PURGE
Purge the output immediately.

W|WRITE
Process the output then purge it.

See *z/OS JES2 Initialization and Tuning Guide* for more information about specifying output disposition and how JES2 determines output disposition defaults.

OUTPUT={No|Yes}
Specifies whether or not SYSOUT data is to be written for started tasks.

PERFORM=perform
Specifies the default performance-group number (0-999) for started tasks.

PGMRNAME={No|Yes}
Specifies whether a programmer name is required (Yes) or not required (No) on a JCL JOB statement.

PROCLIB=proclib
Specifies the default procedure library number (00-99) which is to be used for started tasks.

QHELD={Yes|No}
Specifies whether (Yes) or not (No) jobs in this class are to be held (not selected for execution) until the class is released from held status by operator command (by $TJOBCLASS,QHELD=NO).

This parameter is not allowed on either the JOBCLASS(STC) or JOBCLASS(TSU) initialization statements.

REGION=region
Specifies the default for the region size assigned to each job step.

RESTART={No|Yes}
Specifies whether (Yes) or not (No) JES2 is to requeue for execution any job of this job class that had been executing before the IPL of the system was repeated and a JES2 warm start was performed.

This parameter is not allowed on either the JOBCLASS(STC) or JOBCLASS(TSU) initialization statements.

SCAN={No|Yes}
Specifies that the jobs in this job class are to be queued for output processing immediately after JCL conversion (Yes) or queued as usual (No).

This parameter is not allowed on either the JOBCLASS(STC) or JOBCLASS(TSU) initialization statements.

SCHENV=xxxxx
The default SCHENV for a given JOBCLASS can be specified via $T JOBCLASS(c), SCHENV=xxxxx where xxxxx is a 1 to 16 character SCHENV. The SCHENV must be defined to WLM. If it is not, the setting will be ignored.

SWA={ABOVE|BELOW}
SWA=ABOVE specifies that all eligible schedule work area (SWA) control blocks created for started task will be placed above 16 megabytes in virtual storage.

In a MAS environment, this parameter is set by the member on which the job is converted, not the member on which it executes.

SWA=BELOW specifies that all SWA control blocks for started task will reside below 16 megabytes in virtual storage.

TIME=min,sec
Specifies the default for the maximum time that each job step can run.

TYPE6={No|Yes}
Specifies whether (YES) or not (NO) JES2 produces type 6 SMF records for started tasks.

TYPE26={No|Yes}
Specifies whether (YES) or not (NO) JES2 produces type 26 (job summary) SMF records for started tasks.

XBM=xbm
The 1 to 8 character name of the execution batch monitor (XBM) procedure to be executed by jobs running in the specified class.

This parameter is not allowed on either the JOBCLASS(STC) or JOBCLASS(TSU) initialization statements.

XEQCount=maximum
Specifies the maximum number of jobs executed in the MAS.

Authority Required

This command requires **system** authority. The description of the $T RDRnn command explains how to ensure the proper MVS system command group authority is assigned.

This command requires **control** security access authority. For a description of assigning command input authority, see *z/OS JES2 Initialization and Tuning Guide*.

Scope

MAS-wide. This command affects job classes on all members of the multi-access spool.

Messages

The $HASP837 message displays the current values of all the parameters on the JOBCLASS initialization statement.

Example

1 `$t jobclass(1),outdisp=(purge,write)`

```
          $HASP837 JOBCLASS(1)
$HASP837 JOBCLASS(1)    ACCT=NO,PGMRNAME=NO,TIME=(000030,
$HASP837                00),REGION=0001M,COMMAND=DISPLAY,
$HASP837                BLP=NO,AUTH=(ALL),MSGLEVEL=(0,1),
$HASP837                COPY=NO,HOLD=NO,IEFUJP=YES,
$HASP837                IEFUSO=YES,JOURNAL=YES,LOG=YES,
$HASP837                MODE=JES,OUTDISP=(PURGE,WRITE),
$HASP837                OUTPUT=YES,PERFORM=000,PROCLIB=00,
```

```
$HASP837                QHELD=NO,RESTART=NO,SCAN=NO,
$HASP837                SCAN=NO,TYPE26=YES,TYPE6=YES,
$HASP837                XBM=MYPROCDR,XEQCOUNT=(MAXIMUM=*,
$HASP837                CURRENT=0)
```

Class 1 jobs are processed by MYPROCDR. If a job in this class ends normally and has not yet entered output processing, JES2 purges its JES2 data sets.

2 `$t jobclass(a),qheld=yes`

```
          $HASP837 JOBCLASS(A)
$HASP837 JOBCLASS(A)    ACCT=NO,PGMRNAME=NO,TIME=(000030,
$HASP837                00),REGION=0001M,COMMAND=DISPLAY,
$HASP837                BLP=NO,AUTH=(ALL),MSGLEVEL=(0,1),
$HASP837                COPY=NO,HOLD=NO,IEFUJP=YES,
$HASP837                IEFUSO=YES,JOURNAL=YES,LOG=YES,
$HASP837                MODE=JES,OUTDISP=(PURGE,WRITE),
$HASP837                OUTPUT=YES,PERFORM=000,PROCLIB=00,
$HASP837                QHELD=NO,RESTART=NO,SCAN=NO,
$HASP837                SCAN=NO,TYPE26=YES,TYPE6=YES,
$HASP837                XBM=,XEQCOUNT=(MAXIMUM=20,
$HASP837                CURRENT=5)
```

JES2 modifies the held status for class A.

3 `$t jobclass(w),mode=wlm`

```
          $HASP837 JOBCLASS(W)
$HASP837 JOBCLASS(W)    ACCT=NO,PGMRNAME=NO,TIME=(000030,
$HASP837                00),REGION=0001M,COMMAND=DISPLAY,
$HASP837                BLP=NO,AUTH=(ALL),MSGLEVEL=(0,1),
$HASP837                COPY=NO,HOLD=NO,IEFUJP=YES,
$HASP837                IEFUSO=YES,JOURNAL=YES,LOG=YES,
$HASP837                MODE=WLM,OUTDISP=(PURGE,WRITE),
$HASP837                OUTPUT=YES,PERFORM=000,PROCLIB=00,
$HASP837                QHELD=NO,RESTART=NO,SCAN=NO,
$HASP837                SCAN=NO,TYPE26=YES,TYPE6=YES,
$HASP837                XBM=,XEQCOUNT=(MAXIMUM=*,
$HASP837                CURRENT=8)
```

Jobs in class W which have not yet entered execution will be selected by WLM-controlled initiators rather than JES-controlled initiators.

4 `$t jobclass(stc),condpurg=yes,outdisp=(keep,leave)`

```
          $HASP837 JOBCLASS(STC)
$HASP837 JOBCLASS(STC)       TIME=(000010,00),REGION=0000K,
$HASP837                     COMMAND=EXECUTE,BLP=NO,AUTH=(ALL),
$HASP837                     MSGLEVEL=(0,0),MSGCLASS=A,
$HASP837                     IEFUJP=YES,IEFUSO=YES,
$HASP837                     OUTDISP=(KEEP,LEAVE),
$HASP837                     OUTPUT=YES,PERFORM=000,PROCLIB=00,
$HASP837                     SWA=ABOVE,TYPE26=YES,TYPE6=YES,
$HASP837                     XEQCOUNT=(),CONDPURG=YES
```

STCs that have not yet entered output processing are affected as follows:

- If the STC ends normally and has only null data sets (other than JES2 data sets), JES2 purges its output. The specification of CONDPURG=YES produces the result.
- If the STC ends normally but has non-null data sets, JES2 assigns the normal output disposition (keep) to the STC's JES data sets.
- If the STC ends abnormally, JES2 assigns the abnormal output disposition (leave) to the STC's JES data sets.

$T JOBDEF - Set Job Processing Characteristics

Function

To specify the job processing characteristics of JES2.

Syntax

```
►►─$T─JOBDEF──┬──────────────────────────────────────────────────────────────────────────────────►
              │ ,ACCTFLD=─┬─IGNORE───┬─┬──────────────────────┬─┬──────────────────┬─┬─────────────┬─┬
              │           ├─OPTIONAL─┤ │ ,BAD_JOBNAME_CHAR=c │ │ ,CNVT_ENQ=─┬─FAIL─┬─│
              │           └─REQUIRED─┘ └──────────────────────┘ └────────────┬─WAIT─┘ └─────────────┘
►─┬──────────────────────────────────────────────────────────────────────────────────────────────►
  │ ,DUPL_JOB=─┬─DELAY───┬─┬─────────────┬─┬──────────────┬─┬──────────────────┬─┬──────────────┬─│
  │            └─NODELAY─┘ │ ,JCLERR=─┬─No─┬─│ │ ,JNUMWARN=nnn │ │ ,JOBNUM=nnnnnn │
  │                        └──────────┬─Yes─┘ └──────────────┘ └──────────────┘ └────────────────┘
►─┬──────────────────────────────────────────────────────────────────────────────────────────────►
  │ ,JOBWARN=nnn │ │ ,PRTYHIGH=nn │ │ ,PRTYJECL=─┬─No─┬─│ │ ,PRTYJOB=─┬─No─┬─│ │ ,PRTYLOW=nn │
  │              └─┘ └──────────────┘ └────────────┬─Yes─┘ └───────────┬─Yes─┘ └─────────────┘
►─┬──────────────────────────────────────────────────────────────────────────────────────────────►◄
  │ ,PRTYRATE=nnnn │ │ ,RANGE=─┬─nnnnn──────────────────┬─┬─────────────┬─│ │ ,RASSIGN=─┬─No─┬─│
  │                └─┘         └─(-nnnnn──────────────)─┘ └─────────────┘ └───────────┬─Yes─┘
                                                          └─,mmmmm─┘
```

Parameters

ACCTFLD={IGNORE|OPTIONAL|REQUIRED}

Specifies the type of scan that JES2 is to perform on the JCL JOB statement account field:

IGNORE

If the account field is specified on the JOB statement, it is ignored.

OPTIONAL

The account field on the JOB statement is optional and no account parameters are required.

REQUIRED

The account field is required on the JOB statement and the first two positional parameters must be specified.

Note: The specified value is applied only to those jobs that have not yet entered the system.

Scope: Single Member.

BAD_JOBNAME_CHAR=c

Specifies the character to use in place of invalid characters in a jobname. This translation is used for JES2 commands and displays as well as RACF entity names. Valid values are: A-Z, 0-9, $, #, @, /, +, :, ?, _, -, !

Scope:MAS-Wide.

CNVT_ENQ={FAIL|WAIT}

Specifies if the converter should WAIT for the unavailable data set to become available or FAIL (with a JCL error) a job that requests an unavailable JCLLIB data set.

Scope: MAS-Wide

DUPL_JOB={DELAY|NODELAY}
Specifies whether or not JES2 is allowed to concurrently execute batch jobs with the same name in the same MAS.

DELAY
Do not allow JES2 to execute batch jobs with the same name in the same MAS at the same time.

NODELAY
Allow JES2 to execute batch jobs with the same name in the same MAS to execute at the same time.

Scope: MAS-Wide.

JCLERR={No|Yes}
Specifies whether or not JCL scan errors detected by JES2 cause a job to terminate. If you specify Y, job termination does not ensure all JCL errors have been found. If you specify N, a job with JCL errors can still fail during JCL conversion.

Note: The specified value is applied only to those jobs that have not yet entered the system.

Scope: Single Member.

JOBNUM=nnnnnn|1000
Specifies the maximum number (10-200000) of jobs that can be in the JES2 job queue at any given time. This value includes all TSU and STC jobs, as well as batch jobs. This number can be increased or decreased by operator command.

JNUMWARN=nnn
The percentage (0-100) of assignable job numbers (for jobs originating at the local node) used at which the $HASP050 message alerts the operator of a shortage of job numbers. JES2 deletes this message from the console when the shortage is relieved (either by a decrease in resource use or by an increase in the threshold).

Note: If you specify 0, no alert is given.

Scope: MAS-Wide.

JOBWARN=nnn
The percentage (0-100) of job queue elements used at which the $HASP050 message alerts the operator of a shortage of job queue elements. JES2 deletes this message from the console when the resource shortage is relieved (either by a decrease in resource use or an increase in the threshold).

Note: If you specify 0, no alert is given.

Scope: MAS-Wide.

PRTYHIGH=nn
The upper priority limit (0-15) associated with the JES2 job priority aging feature. JES2 does not priority-age a job if the job's priority is (or becomes) equal to, or greater than, the PRTYHIGH value.

Note: The specified value is applied only to those jobs that have not yet entered execution.

Scope: MAS-Wide.

PRTYJECL={No|Yes}
Specifies whether the priority specification on the JES2 /*PRIORITY control statement is to be supported or ignored.

Note: The specified value is applied only to those jobs that have not yet entered the system.

Scope: Single Member.

PRTYJOB={No|Yes}
Specifies whether the priority specification (PRTY=) on the JOB statement is to be supported or ignored.

Note: The specified value is applied only to those jobs that have not yet entered execution.

Scope: Single Member.

PRTYLOW=nn
The lower priority limit (0-15) associated with the JES2 job priority aging feature. JES2 does priority-age a job only if the job's priority is initially equal to or greater than the PRTYLOW value.

Note: The specified value is applied only to those jobs that have not yet entered execution.

Scope: MAS-Wide.

PRTYRATE=nnnn
The number (0-1440) of time periods into which a 24-hour day is to be divided for use in increasing a job's priority by the JES2 priority aging feature. JES2 uses this rate to increase the job's execution priority and the job's output priority. For example, if you specify PRTYRATE=3, JES2 increases a job's priority by one for every 8 hours it remains in the system.

Notes:

1. The specified value is applied only to those jobs that have not yet entered execution.
2. JES2 increases a job's priority only if it is equal to or above the value specified by the PRTYLOW parameter.
3. JES2 does not increase a job's priority above the value specified by the PRTYHIGH parameter.
4. If you specify zero, no priority aging is performed.
5. Jobs in WLM-node job classes are not priority aged.

Scope: MAS-Wide.

RANGE=(nnnnnn,mmmmmm)
The range of job numbers (1-999999) that JES2 uses to assign JOBIDs to jobs originating on the local node.

nnnnnn
The lowest number (1-999989) that is assigned as a JES2 job identifier for jobs originating at the local node.

mmmmmm
The highest number ((nnnn+10)-999999) that is assigned as a JES2 job

identifier for jobs originating at the local node. The value specified for the highest number (mmmmmm) must be equal to the lowest number (nnnnnn) or at least 10 greater than the value used for the lowest number (nnnnnn).

If you code this parameter, you can specify one or two values:

- If you specify one value, that value becomes both the low and the high end of the range.
- If you specify two values, the first value is the low end of the range and the second value the high end. The two values can be equal. If they are not equal, the second value must be larger than the first value.

Notes:

1. The specified value is applied only to those jobs that have not yet entered the system.
2. JES2 maintains the new RANGE= specification until you perform a cold start or issue another $T JOBDEF,RANGE=( ) command.
3. Setting JOBDEF RANGE upper limit above 99,999 will cause the jobid format to change from CCCNNNNN to C0NNNNNN where CCC is JOB/STC/TSU and C is J/S/T and NNNNN and NNNNNN are numbers.

Scope: MAS-Wide.

RASSIGN={No|Yes}

Specifies whether job numbers outside of the RANGE definition can be assigned to jobs received via NJE or spool reload.

YES

Jobs with original job numbers outside JOBDEF RANGE will retain their original job number, if possible.

NO

Jobs with original job numbers outside JOBDEF RANGE will always be assigned a new job number within the range.

Scope: Single Member.

Authority Required

This command requires **system** authority. The description of the $T RDRnn command explains how to ensure the proper MVS system command group authority is assigned.

This command requires **control** security access authority. For a description of assigning command input authority, see *z/OS JES2 Initialization and Tuning Guide*.

Processing Considerations

See the individual parameter descriptions to determine the impact of this command on jobs in different phases of execution.

Scope

The scope of this command varies by parameter. See the description of each parameter for its scope.

The values supplied for some parameters on this command will be in effect across the entire MAS, while the values supplied for other parameters will be in effect for this member only.

Depending on your installation's setup, you might want the single-member parameters for this command to be applied to all members of the MAS (to ensure a consistent environment across the MAS). If so, you can use the MVS ROUTE *ALL command to issue this command to all active members (if the JES2 command character is the same on all members). See *z/OS MVS System Commands* for more information on using the ROUTE *ALL command.

Messages

The $HASP835 message displays the current values of all the parameters on the JOBDEF initialization statement.

Example

```
1  $t jobdef,prtyjob=yes,prtylow=5,prtyhigh=12

        $HASP835 JOBDEF
$HASP835 JOBDEF  ACCTFLD=OPTIONAL,BAD_JOBNAME_CHAR=_,
$HASP835         CNVT_ENQ=FAIL,JCLERR=NO,JNUMBASE=7,
$HASP835         JNUMFREE=9993,JNUMWARN=80,JOBFREE=494,
$HASP835         JOBNUM=500,JOBWARN=80,PRTYHIGH=12,PRTYJECL=YES,
$HASP835         PRTYJOB=YES,PRTYLOW=5,PRTYRATE=0,RANGE=(1,
$HASP835         9999),RASSIGN=YES,DUPL_JOB=DELAY
```

JES2 supports the priority specification on the JCL JOB statement. JES2 priority-ages all jobs whose initial priority is equal to, or greater than, 3 and less than 12. If a job's priority becomes 12, JES2 stops priority-aging that job.

$T JOBPRTY(n) - Set Job Scheduling Characteristics

Function

To specify the job scheduling priorities with relation to execution time.

Syntax

```
►►──$T──JOBPRTY──┬─n──┬──────────┬──┬──────────────────────────────┬──┬──────────────────┬──┬──────────────────┬──►◄
                 │    └─-──┬─n─┬─┘  │                              │  └─,PRIORITY=nn─────┘  └─,TIME=nnnnnn────┘
                 │         └─*─┘    │                              │
                 │                  │   ┌──────────────────────┐   │
                 │                  │   ▼                      │   │
                 │                  └─(──┬─n─┬──┬──────────┬──┬─)─┘
                 │                       └─*─┘  └─-──┬─n─┬─┘  │
                 │                                   └─*─┘    │
```

Parameters

n The entry (1-9) being referenced in the JOBPRTY table.

PRIORITY=nn
The job priority (0-15) that is to be associated with the job execution time, specified by the TIME parameter.

TIME=nnnnnn
The execution time (1-279620, in minutes) of a job that is to be associated with the PRIORITY= value. The TIME value is compared against the estimated execution time for a job, taken from the accounting field of the JOB statement, the /*JOBPARM statement, or the ESTIME initialization statement.

Authority Required

This command requires **system** authority. The description of the $T RDRnn command explains how to ensure the proper MVS system command group authority is assigned.

This command requires **control** security access authority. For a description of assigning command input authority, see *z/OS JES2 Initialization and Tuning Guide*.

Processing Considerations

- This command affects only those jobs that have not yet entered the system.
- The JOBPRTY values do not affect a job if either of the following are true:
  A /*PRIORITY control statement was specified for the job and PRTYJECL=YES was specified on the JOBDEF initialization statement.
  The PRTY= parameter was specified on the job's JCL JOB statement and PRTYJOB=YES was specified on the JOBDEF initialization statement.
- Before changing the specifications of JOBPRTY(n), make sure the values you want assigned fit into the defined JOBPRTY table. See *z/OS JES2 Initialization and Tuning Reference* for further information about the size of the JOBPRTY(n) table.

Scope

Single Member. This command will be in effect for this member only.

Depending on your installation's setup, however, you might want this command to be applied to all members of the MAS (to ensure a consistent environment across the MAS). If so, you can use the MVS ROUTE *ALL command to issue this command to all active members (if the JES2 command character is the same on all members). See *z/OS MVS System Commands* for more information on using the ROUTE *ALL command.

Messages

The $HASP832 message displays the current values of all the parameters on the JOBPRTY(n) initialization statement.

Example

```
1  $t jobprty(2),priority=11,time=3

$HASP832 JOBPRTY(2) PRIORITY=11,TIME=3
```

Any job entering the system with an estimated execution time of 3 minutes receives a priority of 11 in the JES2 job queues.

$T L(nn).JT(nn) - Specify Network Job Transmitter Characteristics

Function

To specify the work selection and processing characteristics of the indicated job transmitter(s).

Syntax

```
►►─$T─L─┬─nn─┬──────────┬──────────────────────────────────────────────────────────────────────────────────────────────────►
        │    └─-─┬─mm─┬─┘                                                                                                   │
        │        └─*─┘                                                                                                     │
        │        ┌──────────────────────────────────────────────────────────────────────────────────────────────────────┐
        │        ▼                                                                                                         │
        └─(──────┬─nn─┬──────────┬──────────────────────────────────────────────────────────────────────────────────────)─┘
                 │    └─-─┬─mm─┬─┘                                                                                                   │
                 │        └─*─┘                                                                                                     │
                 .JT─┬─nn─┬──────────┬──────────────────────────────────────────────────────────────────────────────────────►
                     │    └─-─┬─mm─┬─┘                                                                                                   │
                     │        └─*─┘                                                                                                     │
                     │        ┌──────────────────────────────────────────────────────────────────────────────────────────────────────┐
                     │        ▼                                                                                                         │
                     └─(──────┬─nn─┬──────────┬──────────────────────────────────────────────────────────────────────────────────────)─┘
                              │    └─-─┬─mm─┬─┘                                                                                                   │
                              │        └─*─┘                                                                                                     │

►──┬──────────────────────────────────────────────────────────────────────────────
```

Table 51 on page 677, describes the effect of each criterion when placed before and after the slash.

2. The order of those criteria specified after the slash indicates the priority (highest to lowest, in left to right order) in which JES2 attempts to match them.
3. Specifying a minus sign (-) before a criterion causes that criterion to be removed from the list.

   Note: An invalid operand message ($HASP003) is issued if an error is found in the WS operand, that is, if you try to remove a criterion that is not there. For example: If you enter $tl1.jt1,ws=(-limit) and limit is not in the current work selection list for l1.jt1, you get the $HASP003 message.
4. Specifying a criterion that is not currently specified in the list adds it to the end of the list either before or after the slash, depending on the placement of the slash in the command. If the slash is omitted from the command, JES2 assumes that the slash is at the end of the command.
5. Specifying a criterion currently in the list causes that criterion to be moved to the end of the list, thereby decreasing its priority. To correct a WS list that was erroneously changed by an incorrect operator command, remove any criterion that should not be in the list (specify a minus sign (-) before the criterion). If necessary, re-order the remaining criterion.
6. The LIMit subparameter has no effect as a work selection value for files received from a node that does not provide a page count for its files. For more information, refer to the sending node's reference documentation.
7. In general, the smaller the work selection list the less the placement of certain criteria within the list affects the work selection.

Authority Required

This command requires **system** authority. The description of the $T RDRnn command explains how to ensure the proper MVS system command group authority is assigned.

This command requires **control** security access authority. For a description of assigning command input authority, see *z/OS JES2 Initialization and Tuning Guide*.

Processing Considerations

- If you specify a null value for a characteristic, make sure that characteristic is not specified as an exact match criterion in the work selection list. If the characteristic is specified as an exact match criterion, this device does not select any output.
- If you are uncertain of the characteristics in effect, enter the $D or $D U command for the particular SYSOUT transmitter.

Scope

Single Member. This command will be in effect for this member only. There is no need to have this command issued to all members of the MAS.

Messages

The $HASP003 message displays the current settings of all the parameters on the L(nnnn).JT(n) initialization statement.

Example

```
1  $t l1.jt1,ws=(lim),lim=0-100

$HASP603 L1.ST1   UNIT=0022,STATUS=DRAINED,LIMIT=(0,100),
$HASP603          WS=(LIM/)
```

Job transmitter 1 on line 1 takes work selection limits of 0-100 records.

Table 51. SYSOUT Transmitter Work Selection Criteria

CRITERION	BEFORE SLASH (/)	AFTER SLASH (/)
LIMit	The amount of output generated by an output group must fall within the limits (LIMit=) set for this device. This subparameter has no effect as a work selection value for files received from a node that does not provide a page count for its files. For more information, refer to the sending node's reference documentation.	It is not required that the amount of output generated by the output group fall within the limits (LIMit=) set for this device. This subparameter has no effect as a work selection value for files received from a node that does not provide a page count for its files. For more information, refer to the sending node's reference documentation.

$T L(nnnn).ST(n) - Specify Network SYSOUT Transmitter Characteristics

Function

To specify the work selection and processing characteristics of the indicated SYSOUT transmitter(s).

Syntax

```
►►─$T─L─┬─nnnn─┬──────────┬──────────────
```

this command. The subscript can specify a numeric value (1-32767) or a range of values associating lines with SYSOUT transmitters.

(n)
The subscript defining the SYSOUT transmitter or transmitters that are affected by this command. The subscript can specify a numeric value (1-7) or a range of values for SYSOUT transmitters on the specified line.

LIMit={m|m-n|m-*}
Specifies the limits (in records) for SYSOUT data sets that the SYSOUT transmitter will select. This number applies to the total lines of all non-spun output in the job or to individual spun SYSOUT data sets (or data set fragments) in a job.

For both variables *m* and *n*, you can specify a range of values from 0 through 999999. *m* and *n* can be equal. If they are not equal, *n* must be larger than *m*.

If you code only *m*, that value becomes both the lower and upper limit. If * is specified for n, the upper limit is the default value 4294967295.

OUTDISP={H|HOLD|K|KEEP|L|LEAVE| W|WRITE}
Specifies the disposition(s) that the output must have in order to be eligible for processing by this transmission line. The operator can specify one to four of the following valid dispositions: Hold, Keep, Leave, or Write.

PLIM={m|m-n|m-*}
Specifies the limits (in pages) for SYSOUT data sets that the SYSOUT transmitter will select. This number applies to the total pages of all non-spun output in the job or to individual spun SYSOUT data sets in a job.

For both variables *m* and *n*, you can specify a range of values from 0 through 999999. *m* and *n* can be equal. If they are not equal, *n* must be larger than *m*.

If you code only *m*, that value becomes both the lower and upper limit. If * is specified for n, the upper limit is the default value 4294967295.

WS=(criteria)
Specifies the work selection criteria for this device. Using any combination of user and JES2-defined criteria, you can specify up to 19 criteria in the WS= list. Multiple entries must be separated by commas and the list must always be enclosed in parentheses (even if only one criterion is specified). If a criterion is specified in the list, work selection is based on the current setting of the corresponding parameter. If a criterion is not specified in the list, the criterion is not considered during work selection.

The general rules for specifying a SYSOUT transmitter work selection list are:

1. You can use one slash (/) before or after one of the criterion to further specify work selection. Criteria placed before the slash must be matched exactly if the work is to be selected. Criteria placed after the slash do not have to match exactly.

   Table 51 on page 677, describes the effect of each criterion when placed before and after the slash.
2. The order of those criteria specified after the slash indicates the priority (highest to lowest, in left to right order) in which JES2 attempts to match them.
3. Specifying a minus sign (-) before a criterion causes that criterion to be removed from the list.

   Note: An invalid operand message ($HASP650) is issued if an error is found in the WS operand, that is, if you try to remove a criterion that

is not there. For example: If you enter $toff1.st,ws=(-jobname) and jobname is not in the current work selection list for off1.st, you get the $HASP650 message.

4. Specifying a criterion that is not currently specified in the list adds it to the end of the list either before or after the slash, depending on the placement of the slash in the command. If the slash is omitted from the command, JES2 assumes that the slash is at the end of the command.
5. Specifying a criterion currently in the list causes that criterion to be moved to the end of the list, thereby decreasing its priority. To correct a WS list that was erroneously changed by an incorrect operator command, remove any criterion that should not be in the list (specify a minus sign (-) before the criterion). If necessary, re-order the remaining criterion.
6. The LIMit subparameter has no effect as a work selection value for files received from a node that does not provide a page count for its files. For more information, refer to the sending node's reference documentation.
7. In general, the smaller the work selection list the less the placement of certain criteria within the list affects the work selection.
8. For both line and page mode devices, the LIM= and PLIM= values must be satisfied.

Authority Required

This command requires **system** authority. The description of the $T RDRnn command explains how to ensure the proper MVS system command group authority is assigned.

This command requires **control** security access authority. For a description of assigning command input authority, see *z/OS JES2 Initialization and Tuning Guide*.

Processing Considerations

- If you specify a null value for a characteristic, make sure that characteristic is not specified as an exact match criterion in the work selection list. If the characteristic is specified as an exact match criterion, this device does not select any output.
- If you are uncertain of the characteristics in effect, enter the $D or $D U command for the particular SYSOUT transmitter.

Scope

Single Member. This command will be in effect for this member only. There is no need to have this command issued to all members of the MAS.

Messages

The $HASP603 message displays the current settings of all the parameters on the L(nnnn).ST(n) initialization statement.

Example

```
1  $t l1.st1,ws=(lim),lim=0-100,plim=0-5

$HASP603 L1.ST1   UNIT=0022,STATUS=DRAINED,LIMIT=(0,100),
$HASP603          PLIM=(0,5),WS=(LIM/)
```

SYSOUT transmitter 1 on line 1 takes work selection limits of 0-100 lines and 0-5 pages.

Table 52. SYSOUT Transmitter Work Selection and Output Criteria

CRITERION	BEFORE SLASH (/)	AFTER SLASH (/)
LIMit	The amount of output generated by an output group must fall within the limits (LIMit= or PLIM=) set for this device. Otherwise, the output group is not selected. For both line and page mode devices, JES2 checks the LIM= and PLIM= values. This subparameter has no effect as a work selection value for files received from a node that does not provide a page count for its files. For more information, refer to the sending node's reference documentation.	It is not required that the amount of output generated by the output group fall within the limits (LIMit= or PLIM=) set for this device. This subparameter has no effect as a work selection value for files received from a node that does not provide a page count for its files. For more information, refer to the sending node's reference documentation.
OUTDisp	The output group's output disposition must match the output disposition specified (OUTDISP=) for this device.	It is not required that the output group's output disposition match the output disposition (OUTDISP=) specified for this device; however, JES2 attempts to match dispositions. Those that match have top priority.

$T LINE(nnnn) - Control a Line

Function

- To specify the characteristics of a line
- To diagnose line problems
- To disconnect a line.

Syntax

```
►►──$T──┬─LINE─┬──┬─nn─┬──────────┬──┬──────────────────────────────────┬──┬─ Selection limiting keywords ─┬──►
        └─LNE──┘  │    └─-──┬─mm─┬─┘  │                                  │  └───────────────────────────────┘
                  │         └─*──┘    │                                  │
                  │                   │   ┌──────────────────────────┐   │
                  │                   │   ▼                          │   │
                  │                   └─(─┬─nn─┬──┬──────────┬─────┬─)─┘
                  │                       └─*──┘  └─-──┬─mm─┬─┘     │
                  │                                    └─*──┘       │
                  │                                                 │
```

```
►──┬─ Modification keywords ─┬──►◄
   └─────────────────────────┘
```

Modification keywords:

```
├──┬──────────────────────┬──┬──────────────────┬──┬──────────────────────┬──┬──────────────────────────┬──►
   │ ,AUTODISC=──┬─No──┬──┘  │ ,CODE=──┬─A──┬──┘  │ ,COMPRESS=──┬─No──┬──┘  │ ,Discon=──┬─I──────────┬──┘
   │             └─Yes─┘     │         └─B──┘     │             └─Yes─┘     │           ├─INTERRUPT──┤
   │                         │                    │                         │           ├─No─────────┤
   │                         │                    │                         │           ├─Q──────────┤
   │                         │                    │                         │           └─QUIESCE────┘
```

```
►──┬──────────────────────┬──┬──────────────────┬──┬──────────────────┬──┬──────────────────┬──►
   │ ,DUPLEX=──┬─FULL─┬──┘  │ ,INTERFAC=──┬─A──┬──┘  │ ,JRNUM=defaultn──┘  │ ,JTNUM=defaultn──┘
   │           └─HALF─┘     │             └─B──┘     │
```

```
►──┬──────────────────────────┬──┬──────────────────┬──┬──────────────────────────┬──┬──────────────────┬──►
   │ ,LINECCHR=──┬─EBCDIC───┬──┘  │ ,LOG=──┬─No──┬──┘  │ ,Password=password──┘  │ ,REST=rest───────┘
   │             └─USASCII──┘     │        └─Yes─┘     │
```

```
►──┬──────────────────────┬──┬──────────────────┬──┬──────────────────┬──┬──────────────────────┬──┬──────────────────┬──┤
   │ ,SPEED=──┬─HIGH─┬──┘  │ ,SRNUM=defaultn──┘  │ ,STNUM=defaultn──┘  │ ,TRaceio=──┬─No──┬──┘  │ ,UNIT=unit───────┘
   │          └─LOW──┘     │                     │                     │            └─Yes─┘     │
```

Selection limiting keywords:

```
├──┬──────────────────────────────────────────┬──┬──────────────────────────────────────────┬──►
   │ ,──/──AUTODISC──┬─=──┬──┬─No──┬──┬─────┬──┘  │ ,──/──CODE──┬─=──┬──┬─A──┬──┬─────┬──┘
   │                 └─¬=─┘  └─Yes─┘  │     │     │             └─¬=─┘  └─B──┘  │     │
```

```
►──┬──────────────────────────────────────────┬──┬──────────────────────────────────────────┬──►
   │ ,──/──COMPRESS──┬─=──┬──┬─No──┬──┬─────┬──┘  │ ,──/──Discon──┬─=──┬──┬─I──────────┬──┬─────┬──┘
   │                 └─¬=─┘  └─Yes─┘  │     │     │               └─¬=─┘  ├─INTERRUPT──┤  │     │
   │                                  │     │     │                       ├─No─────────┤  │     │
   │                                  │     │     │                       ├─Q──────────┤  │     │
   │                                  │     │     │                       └─QUIESCE────┘  │     │
```

```
►──┬──────────────────────────────────────────┬──┬──────────────────────────────────────────┬──►
   │ ,──/──DUPLEX──┬─=──┬──┬─FULL─┬──┬─────┬──┘  │ ,──/──INTERFAC──┬─=──┬──┬─A──┬──┬─────┬──┘
   │               └─¬=─┘  └─HALF─┘  │     │     │                 └─¬=─┘  └─B──┘  │     │
```

```
►──┬──────────────────────────────────────────────────────────────────────────────────────────────────────────────────►
   │ ,──/──JRNUM──┬──=──┬──jrnum──┬  │ ,──/──JTNUM──┬──=──┬──jtnum──┬
   │              ├──¬=──┤         │  │              ├──¬=──┤         │
   │              ├──>───┤         │  │              ├──>───┤         │
   │              └──<───┘         │  │              └──<───┘         │

►──┬──────────────────────────────────────────────────────────────────────────────────────────────────────────────────►
   │ ,──/──LINECCHR──┬──=──┬──EBCDIC──┬  │ ,──/──LOG──┬──=──┬──No──┬
   │                 └──¬=──┘  └──USASCII──┘  │            └──¬=──┘  └──Yes──┘

►──┬──────────────────────────────────────────────────────────────────────────────────────────────────────────────────►
   │ ,──/──REST──┬──=──┬──rest──┬  │ ,──/──SPEED──┬──=──┬──HIGH──┬  │ ,──/──SRNUM──┬──=──┬──srnum──┬
   │             ├──¬=──┤        │  │              └──¬=──┘  └──LOW──┘  │              ├──¬=──┤         │
   │             ├──>───┤        │  │                                   │              ├──>───┤         │
   │             └──<───┘        │  │                                   │              └──<───┘         │

►──┬──────────────────────────────────────────────────────────────────────────────────────────────────────────────────►
   │ ,──/──STNUM──┬──=──┬──stnum──┬  │ ,──/──TRaceio──┬──=──┬──No──┬
   │              ├──¬=──┤         │  │                └──¬=──┘  └──Yes──┘
   │              ├──>───┤         │  │
   │              └──<───┘         │  │

►──┬──────────────────────────────────────────────────────────────────────────────────────────────────────────────────┤
   │ ,──/──TRANSPAR──┬──=──┬──No──┬  │ ,──/──UNIT──┬──=──┬──unit──┬
   │                 └──¬=──┘  └──Yes──┘  │             ├──¬=──┤        │
   │                                      │             ├──>───┤        │
   │                                      │             └──<───┘        │
```

Parameters

nnnn
The subscript defining the line(s) that are affected by this command. The subscript can specify a specific numeric value or a range of values (1-9999). For information about specifying a range for this subscript, see “Syntax Conventions” at the front of this chapter.

AUTODISC={No|Yes}
Specifies whether or not this line is to be automatically disconnected from a terminal when the local modem disconnects.

Notes:

1. You may change this parameter only if the specified line is drained.
2. If you specify AUTODISC=Y for a leased, dedicated line, you may cause serious performance problems without receiving the $HASP094 I/O ERROR message. This may also occur if a modem is disconnected or powered-off during a session or a line is started with the modem disconnected or powered-off.

CODE={A|B}
The BSC adapter code for this line. Code A refers to the first code in a BSC adapter. Code B refers to the second code in a BSC adapter that has the dual code feature. If the dual code feature is not present, do not specify CODE=B.

Note: You may change this parameter only if the specified line is drained.

COMPRESS={No|Yes}
Specifies whether or not this line allows BSC-attached hardware terminals to use data compression.

If you specify Y, the specification of the COMPRESS= parameter on the RMT(nnnn) initialization statement or the COMP/NOCOMP parameter on any remote device (Rnnnn.xxx) initialization statements is allowed to take affect. For example, if RMT(nnnn) specifies COMPRESS=NO, or Rnnnn.xxx specifies NOCOMP, no data compression takes place.

If you specify N, this parameter overrides the specification of the COMPRESS= parameter on the RMT(nnnn) initialization statement for any remote workstation that might use this line and the COMP/NOCOMP parameter on any remote device (Rnnnn.xxx) initialization statements.

Notes:

1. Compression compatibility is standard for SNA remotes and BSC multi-leaving workstations. NJE data will always be compressed.
2. You may change this parameter only if the specified line is drained.

Discon={I|INTERRUPT|No|Q|QUIESCE}
Specifies whether the line is to be disconnected immediately (I) or after it completes its current activity (Q).

I|INTERRUPT
A sign-off record is sent to the attached multi-leaving remote workstation or to the connected NJE node.

No
The line is not to be disconnected.

Q|QUIESCE
The disconnection occurs as though the remote operator or NJE node had signed off.

Note: You may change this parameter only if the specified line is **not** currently drained.

DUPLEX={FULL|HALF}
Specifies whether this is a half-duplex or full-duplex line.

Note: You may change this parameter only if the specified line is drained.

INTERFAC={A|B}
The BSC adapter interface for this line. A refers to the first interface in a BSC adapter; B refers to the second, which has the dual-communications interface feature. If the adapter does not have the dual-communications interface feature, do not specify INTERFAC=B.

Note: You may change this parameter only if the specified line is drained.

JRNUM=n|DEFAULT
Specifies the number (0-7) of network job receivers to be associated with this NJE line. The value of n is an integer that specifies the maximum number of input job streams allowed to be concurrently active on this line. This specification should match the value of JTNUM for this line on other nodes with which this node is to communicate directly. The sum of the values of JRNUM and SRNUM for this line must not exceed 8, or the statement is ignored.

This value overrides the default global value set by the JRNUM= parameter of the NJEDEF statement. If this value is omitted or set to DEFAULT, the value is taken from the JRNUM= parameter of NJEDEF. If omission or use of DEFAULT would result in a sum of JRNUM= and SRNUM= exceeding 8, JRNUM= is reduced so that the sum would equal 8.

Default: Value of the JRNUM= parameter of NJEDEF.

Modification: Hot start.

JTNUM=n|DEFAULT
Specifies the number (0-7) of network job transmitters to be associated with this

NJE line. The value of n is an integer that specifies the maximum number of output job streams allowed to be concurrently active on this line. This value should remain unchanged unless it is known that a particular user has some jobs with extremely large amounts of input to be transmitted and other short jobs that must be transmitted concurrently. If there are not enough receivers on the receiving node to receive jobs over the line, excess transmitters drain automatically. The sum of the values JTNUM= and STNUM= for this line must not exceed 8, or the statement is ignored.

This value overrides the default global value set by the JTNUM= parameter of the NJEDEF statement. If this value is omitted or set to DEFAULT, the value is taken from the JTNUM= parameter of NJEDEF. If omission or use of DEFAULT would result in a sum of JTNUM= and STNUM= exceeding 8, JTNUM= is reduced so that the sum would equal 8.

Default: Value of the JTNUM= parameter of NJEDEF.

Modification: Hot start.

LINECCHR={EBCDIC|USASCII}

EBCDIC
The BSC adapter is configured for EBCDIC line-control characters.

USASCII
The BSC adapter is configured for ASCII line-control characters. If you specify USASCII, this line must be used with a 2770, 2780, or 3780 USASCII terminal.

Note: You may change this parameter only if the specified line is drained.

LOG={No|Yes}
Specifies whether or not JES2 is to monitor the specified line for channel-end completions (BSC lines) or SNA events (SNA lines). If you specify Y, JES2 issues a diagnostic message to the console with master level authority for each channel-end completion or SNA event detected on the specified line.

Password=cccccccc
The security password, 1 to 8 alphameric characters, used to reject unauthorized terminals attempting to use the specified line. If you specify a null password (P=), JES2 deletes the previously-assigned password.

Note: If you specify a password for a SNA line, it is only meaningful if that line is a dedicated line. You should not specify a password for a SNA line that is used in NJE host-to-host sessions. Be certain to make a note of those passwords assigned because there is no facility for displaying the passwords in effect.

REST=nnnn
An integer (0-2000) that represents the resistance rating of the line as viewed by the installation management and coordinated with other installations. The resistance is an arbitrary value set to indicate a specific line's ability/inability to route work due to "normal" work load requirements and line speed. See *z/OS JES2 Initialization and Tuning Reference* for details about resistance selection.

Note: You may change this parameter only if the specified line is drained.

SPEED={HIGH|LOW}
Specifies whether this is a high-speed (greater than 9600 bits per second) or low-speed line.

Notes:
1. This parameter is applicable only to 360/20 sub-models 2 and 4.
2. You may change this parameter only if the specified line is drained.

SRNUM=n|DEFAULT
Specifies the number (0-7) of network SYSOUT receivers to be associated with this NJE line. The value of n is an integer which specifies the maximum number of SYSOUT receiver streams allowed to be concurrently active on this line. This specification should match the value of STNUM= for this line on the other nodes with which this member is to communicate directly. The sum of the values JRNUM= and SRNUM= for this line must not exceed 8, or the statement is ignored.

This value overrides the default global value set by the SRNUM= parameter on the NJEDEF statement. If this value is omitted or set to DEFAULT, the value is taken from the SRNUM= parameter of NJEDEF. If omission or use of DEFAULT would result in a sum of SRNUM= and JRNUM= exceeding 8, SRNUM= is reduced so that the sum would equal 8.

Default: Value of the SRNUM= parameter of NJEDEF.

Modification: Hot start.

STNUM=n|DEFAULT
Specifies the number (0-7) of network SYSOUT transmitters which will be associated with this NJE line. The value of n is an integer which specifies the maximum number of SYSOUT transmitter streams allowed to be concurrently active on this line. If there are not enough receivers on the receiving node to receive SYSOUT data over the line, excess transmitters drain automatically. The sum of the values JTNUM= and STNUM= for this line must not exceed 8, or the statement is ignored.

This value overrides the default global value set by the STNUM= parameter of the NJEDEF statement. If this value is omitted or set to DEFAULT, the value is taken from the STNUM= parameter of NJEDEF. If omission or use of DEFAULT would result in a sum of STNUM= and JTNUM= exceeding 8, STNUM= is reduced so that the sum would equal 8.

Default: Value of the STNUM= parameter of NJEDEF.

Modification: Hot start.

TRaceio={No|Yes}
Specifies whether or not I/O operations on the specified line are to be traced. Trace ID 4 traces channel-end completions for BSC lines; trace ID 5 traces I/O associated with SNA events on VTAM lines and JES2/VTAM interface events. Trace IDs 21 - 24 trace NCC records.

TRANSPAR={No|Yes}
Specifies whether or not the text transparency feature of the BSC adapter is present on this line. You must specify Y for NJE lines.

Notes:
1. TRANSPAR=NO is valid only for EP links generated to operate as a D/T2701 without the transparency feature. For device types which require the transparency feature -- such as 2703 and CTC -- specifying TRANSPAR=NO has no effect and TRANSPAR=YES is forced.
2. You may change this parameter only if the specified line is drained.

UNIT={devnum|/devnum|SNA}

Specifies a 3-digit or 4-digit hexadecimal device number for a binary synchronous communication (BSC) line. Device numbers can be specified by any of the following formats:

```
UNIT=ddd
UNIT=dddd
UNIT=/ddd
UNIT=/dddd
```

where ddd and dddd represent the device numbers.

A slash (/) can optionally precede the device number (for compatibility with other commands that require a slash to denote a 4-digit device number).

Specify UNIT=SNA to obtain a systems network architecture (SNA) line.

Authority Required

This command requires **system** authority. The description of the $T RDRnn command explains how to ensure the proper MVS system command group authority is assigned.

This command requires **control** security access authority. For a description of assigning command input authority, see *z/OS JES2 Initialization and Tuning Guide*.

Scope

Single Member. This command will be in effect for this member only. There is no need to have this command issued to all members of the MAS.

Messages

The $HASP880 message displays the current values of all the parameters on the LINE(nnnn) initialization statement.

Examples

1 `$t line(4),autodisc=y,transpar=y`

```
$HASP880 LINE4 UNIT=0C14,STATUS=DRAINED,AUTODISC=YES,
               CODE=A,COMPRESS=YES,DUPLEX=HALF,INTERFAC=A,
               LINECCHR=EBCDIC,LOG=NO,PASSWORD=(SET),
               REST=0,SPEED=HIGH,TRACEIO=NO,TRANSPAR=YES
```

When the local modem disconnects, JES2 automatically disconnects line 4 from the remote terminal. The text transparency feature of the BSC adapter is present on line 4.

2 `$t line(12),log=y,p=`

```
$HASP880 LINE12 UNIT=SNA,STATUS=INACTIVE,COMPRESS=YES,
                LOG=YES,PASSWORD=(NOTSET),REST=2,
                SESSIONS=(JESA/INACTIVE),TRACEIO=YES
```

JES2 deletes the password for line 12 and no password is required. JES2 issues a diagnostic message for each SNA event detected on line 12. In the $HASP880 message, the SESSIONS= parameter displays the name of the SNA session (JESA) on this line and the status of that session (INACTIVE).

3 `$t line(26),unit=sna`

```
$HASP880 LINE26 UNIT=SNA,STATUS=DRAINED,COMPRESS=YES,LOG=NO
$HASP880        PASSWORD=(NOTSET),REST=0,SESSIONS=,TRACEIO=NO
```

JES2 specifies that previously defined line 26 is an SNA line. Its status is drained, so a $S LINE command is necessary to start it.

```
4  $t line(1),unit=026

$HASP880 LINE1  UNIT=0026,STATUS=DRAINED,AUTODISC=YES,CODE=A,
$HASP880 COMPRESS=YES,DUPLEX=FULL,INTERFAC=A,
$HASP880 LINECCHR=EBCDIC,LOG=NO,PASSWORD=(NOTSET),
$HASP880 REST=0,SPEED=LOW,TRACEIO=NO,TRANSPAR=YES
```

JES2 specifies that line 1 has an address of 0026. When the local modem disconnects, JES2 automatically disconnects line 1 from the remote terminal.

$T LOGON(n) - Control the JES2/VTAM Interface

Function

- To assign an ID to the JES2/VTAM interface
- To assign or delete a password for the JES2/VTAM interface
- To diagnose SNA Problems.

Syntax

```
►►──$T──┬─LGN──┬──┬─n─────────────────────────────────────────────────────┬──┬─ Selection limiting keywords ─┬──►
        └─LOGON─┘  │  ┌─────────────────────────────────────────────────┐  │  └──────────────────────────────┘
                   │  │                                                 │  │
                   │  │                  ┌─────────────────────────────┐  │
                   │  │                  ▼                             │  │
                   │  │                  ┌─────────────────────────────┐  │
                   │  │                  │                             │  │
                   │  │                  │                             │  │
                   │  │                  │                             │
```

Note: This parameter can only be changed when the session is inactive.

LOG={No|Yes}
Specifies whether or not JES2 is to monitor the JES2/VTAM interface and record all SNA events on the console with master level authority.

Note: When the JES2/VTAM interface is monitored, activity on all SNA lines is monitored.

Password=cccccccc
The security password, 1 to 8 alphameric characters, used to reject unauthorized terminals attempting to use the JES2/VTAM interface. If you specify a null password (P=), JES2 deletes the previously assigned password.

Notes:

1. The password that you assign must be defined to VTAM. See *z/OS Communications Server: SNA Migration* for more information about VTAM definition.
2. You must be certain to make note of the password assigned because there is no facility for displaying the password in effect.

TRaceio={No|Yes}
Specifies whether or not I/O operations on the specified interface are to be traced. Trace ID 5 is used for interface tracing.

Authority Required

This command requires **system** authority. The description of the $T RDRnn command explains how to ensure the proper MVS system command group authority is assigned. The $T NODE(nnnn) command sets command authority for a node.

This command requires **control** security access authority. For a description of assigning command input authority, see *z/OS JES2 Initialization and Tuning Guide*.

Scope

Single Member. This command will be in effect for this member only. There is no need to have this command issued to all members of the MAS.

Messages

The $HASP881 message displays the current values of the parameters on the LOGON(n) initialization statement.

Examples

1
```
$t logon(1),p=,a=pgm1
```

```
$HASP881 LOGON(1) APPLID=PGM1,STATUS=DRAINED,
                  LOG=NO,PASSWORD=(NOTSET),SESSIONS=,
                  TRACEIO=NO
```

JES2 deletes the password for the JES2/VTAM interface, and no password is required. The application ID for this interface is PGM1; no session exists using this interface.

```
2  $t logon(1),log=y,tr=y

$HASP881 LOGON(1) APPLID=JESB,STATUS=INACTIVE,
                  LOG=YES,PASSWORD=(SET),
                  SESSIONS=(MYJES/INACTIVE/LINE3),
                  TRACEIO=YES
```

JES2 issues a diagnostic message for each SNA event on both this JES2/VTAM interface (LOGON1) and any SNA line. Trace ID 5 traces event completions on this JES2/VTAM interface. The SESSIONS= indicates the SNA session name on this interface (MYJES), the session status (INACTIVE), and the SNA line used for connection (LINE3).

$T MASDEF - Control the Multi-Access Spool Environment

Function

To specify multi-access spool definition and tuning parameters.

Syntax

```
►►──$T──MASDEF──┬──────────────────────────────────────────────────────────────────────────────────►
                │ ┌─AUTOEMEM─┐   ┌─OFF─┐ │ │ ┌─────────────────────────────────────────────────┐ │
                └─,─AUTOESYS─┘─=─┴─ON──┘ ┘ └─,DORMANCY=─┬─mmmm──────────────────────────────────┬─┘
                                                        └─(─┬─────────┬─┬──────────┬─)─┘
                                                            └─mmmm────┘ └─,nnnn────┘
►──┬──────────────────────────────────────────────────────────────────────────────────────────────►
  │ └─,HOLD=nnnnnnnn─┘ └─,LOCKOUT=nnnnn─┘ └─,RESTART=─┬─No──┬─┘ └─,SHARED=─┬─CHECK───┬─┘
  │                                                   └─Yes─┘               └─NOCHECK─┘
►──┬──────────────────────────────────────────────────────────────────────────────────────────────►◄
  │ └─,SYNCTOL=nnn─┘
```

Parameters

AUTOEMEM|AUTOSYS={OFF|ON}

Specifies whether (ON) or not (OFF) this JES2 MAS member wants to have its work restarted if this member fails. If a MAS member has specified AUTOEMEM=ON and the MVS system where the member resides fails, its jobs will be warmstarted if another active member in the same sysplex has specified RESTART=YES on its MASDEF statement.

If you specify AUTOEMEM=ON but no other MAS member has RESTART=YES specified, the work active on this member will not be automatically restarted.

Note: The automatic restart management can restart jobs (if the job is registered with the automatic restart management) regardless of whether AUTOEMEM is ON or OFF.

DORMANCY=(mmmm,nnnn)

mmmm
The minimum time, in hundredths of seconds (0-3000), a member of a multi-access spool configuration must wait before it attempts to regain control of the checkpoint data set. This specification prevents any one member from monopolizing the checkpoint data set.

nnnn The maximum time, in hundredths of seconds (100-6000), that a member can wait before it attempts to gain control of the checkpoint data set.

Attention:

1. If the value specified for nnnn is too small, excessive system time may be spent in unnecessary attempts to reacquire the checkpoint data set.
2. If the value specified for nnnn is too large, the start of certain functions and the responses to certain display commands may be delayed.

HOLD=nnnnnnnn

The minimum length of time, in hundredths of seconds (0-99999999), that a member of a multi-access spool configuration must maintain control of the checkpoint data set.

Note: Setting this parameter to a high value tends to limit access of other members of the configuration to the checkpoint data set.

LOCKOUT=nnnnn
The time interval, in hundredths of seconds (500-15000) from the first denied request for the checkpoint data set by a member of a multi-access spool configuration to the time that the configuration assumes the member controlling the checkpoint data set is inoperative. When this time interval has elapsed, JES2 issues the $HASP263 WAITING FOR ACCESS TO JES2 CHECKPOINT VOLUME message indicating a lockout situation, and then resets the time interval to the LOCKOUT value.

RESTART={No|Yes}
Specifies whether (YES) or not (NO) a JES2 MAS member can make the jobs associated with a JES2 MAS member that resided on a failed MVS member eligible for restart.

Notes:

1. If you specify RESTART=YES, this member will restart any work associated with a member that specified AUTOEMEM=ON when the MVS that the member is running on failed.
2. If a JES2 member has been identified as the target of an Automatic Reconfiguration Facility takeover, specify RESTART=NO. For more information about the Processor Resource/Systems Manager (PR/SM) environment to which this applies, see *z/OS MVS Recovery and Reconfiguration Guide*.

SHARED={CHECK|NOCHECK}
Specifies whether the direct access volumes being used in the configuration for spool and checkpoint devices are to be marked as shared (CHECK) or non-shared (NOCHECK).

In a single-member environment, you must specify NOCHECK.

In a multi-access spool configuration, you must specify CHECK. The following are exceptions to this rule:

- In a test situation when isolated spool volumes are being used, you can specify NOCHECK.
- If the shared pack is damaged, the installation can use a non-shared pack to bring up one JES2 system.

SYNCTOL=nnn
The time interval, in seconds (0-300), that must expire before a JES2 member in a multi-access spool configuration is assumed to be inoperative.

Authority Required

This command requires **system** authority. The description of the $T RDRnn command explains how to ensure the proper MVS system command group authority is assigned. The $T NODE(nnnn) command sets the command authority for a node.

This command requires **control** security access authority. For a description of assigning command input authority, see *z/OS JES2 Initialization and Tuning Guide*.

Scope

Single Member. This command will be in effect for this member only.

Depending on your installation's setup, however, you might want this command to be applied to all members of the MAS (to ensure a consistent environment across the MAS). If so, you can use the MVS ROUTE *ALL command to issue this command to all active members (if the JES2 command character is the same on all members). See *z/OS MVS System Commands* for more information on using the ROUTE *ALL command.

Messages

The $HASP843 message displays the current values of all the parameters.

Examples

1 `$T MASDEF,HOLD=1000,LOCKOUT=5000`

```
$HASP843 MASDEF  OWNMEMB=IBM1,AUTOEMEM=OFF,CKPTLOCK=ACTION,
$HASP843         COLDTIME=(1993.295,13:52:35),COLDVRSN=SP 5.1.0,
$HASP843         DORMANCY=(100,500),HOLD=1000,LOCKOUT=5000,
$HASP843         RESTART=NO,SHARED=NOCHECK,SYNCTOL=120,
$HASP843         XCFGRPNM=POK
```

When a member gets control of the checkpoint data set, it must maintain that control for a minimum of 10 seconds. If another member requests access to the checkpoint data set and is denied, JES2 waits 50 seconds before it assumes the member controlling the checkpoint data set is inoperative.

2 `$T MASDEF,RESTART=YES,AUTOEMEM=ON`

```
$HASP843 MASDEF  OWNMEMB=IBM1,AUTOEMEM=STARTING,CKPTLOCK=ACTION,
$HASP843         COLDTIME=(1993.295,13:52:35),COLDVRSN=SP 5.1.0,
$HASP843         DORMANCY=(100,500),HOLD=1000,LOCKOUT=5000,
$HASP843         RESTART=YES,SHARED=NOCHECK,SYNCTOL=120,
$HASP843         XCFGRPNM=POK
```

JES2 specifies that this member of a sysplex can reset the software checkpoint data set automatically for a failing member of the same sysplex. To see AUTOEMEM=ON on a display console, an operator enters a $D MASDEF command after entering the $T MASDEF.

3 `$T MASDEF,AUTOEMEM=OFF`

```
$HASP843 MASDEF  OWNMEMB=IBM1,AUTOEMEM=STOPPING,CKPTLOCK=ACTION,
$HASP843         COLDTIME=(1993.295,13:52:35),COLDVRSN=SP 5.1.0,
$HASP843         DORMANCY=(100,500),HOLD=1000,LOCKOUT=5000,
$HASP843         RESTART=YES,SHARED=NOCHECK,SYNCTOL=120,
$HASP843         XCFGRPNM=POK
```

JES2 specifies that this member of a sysplex no longer can have its jobs restarted through the automatic resetting of the software checkpoint data set. To see ,AUTOEMEM=OFF on a display console, you must enter the $D MASDEF command after entering the $T MASDEF command.

$T MEMBer - Change a Member's Operational Mode

Function

- To set this member to independent mode so that it may operate independent of the multi-access spool configuration.
- To reset this member to normal operational mode.

One or more parameters on this command accepts wildcards. Parameter descriptions will note that.

Syntax

```
►►──$T──MEMBer──┬─nn──┬──────┬──┬──────────────────────────────────────────────┬──┬──────────────────────────────►
                │     └─-─┬mm─┬─┘  │                                              │  │ Selection limiting keywords │
                │         └─*─┘    │                                              │  └─────────────────────────────┘
                ├─'member'─────────┼──────────────────────────────────────────────┤
                │                  │                                              │
                └─(──┬──────────────┬──────────────────────────────────────────)──┘
                     │              ▼                                              │
                     ├─nn──┬──────┬──┬──────┬──┬──────┬──┬──────┬──┬──────┬──┬──┤
                     │     └─*────┘  │      │  │      │  │      │  │      │  │  │
                     │               └─-─┬mm─┬─┘      │  │      │  │      │  │  │
                     │                   └─*─┘        │  │      │  │      │  │  │
                     ├─member──┬──────┬──┬──────┬──┬──┬──────┬──┬──────┬──┬──┤
                     │         └─*────┘  │      │  │  │      │  │      │  │  │
                     │         ├─'member'─┤      │  │  │      │  │      │  │  │
                     │         │          │      │  │  │      │  │      │  │  │
                     │         │          │      │  │  │      │  │      │  │  │
                     │         │          │
```

```
►─┬──────────────────────────────────────────────────────────────────────────┬──┤
  └─,─┬─────┬─VERSION─┬─=──┬─version─┘
      └─/───┘         ├─¬=─┤
                      ├─>──┤
                      └─<──┘
```

Parameters

memname|n|n-n|*
Specifies the 1 or 2 digit member number (1-32) or the 1 to 8 alphanumeric member name. Specify only the following characters: A-Z, 0-9, $, #, and @. Each member must have a unique name. The console that enters this command is attached to the member specified here.

You can specify wildcards on this parameter. See “Using Wildcards” on page 93 for additional information.

IND={No|Yes}
Specifies whether this member is to be set to independent mode or reset to normal operational mode within the multi-access spool configuration.

If you specify Y, the member only processes jobs that are routed to it and designated to execute on a member in independent mode. Non-independent mode jobs that try to execute cannot do so until the member is taken out of independent mode. The spool volumes are still shared with other members of the multi-access spool configuration. This function allows an installation to test a new member, or make modifications to an existing member, without disrupting the other processors or their workloads.

SLEVEL=slevel
Only members with the specified service level are modified.

STATUS[=ACTIVE|DEFINED|DORMANT|DOWN|DRAINED|FAILED|INITIALIZING|INUSE|JES2-FAILED|JESXCF-FAILED|MVS-GONE|TERMINATED|TERMINATING| UNDEFINED|UNDEFINED-PENDING|WAITING-WARMSTART-CLEANUP]
Specifies that the current status of the member is to be displayed. Valid keyword values for the STATUS parameter and their meanings are as follows:

ACTIVE
Displayed when the member that is up and running.

DEFINED
Displays only defined members.

Note: This parameter is only a filter. You can specify this status but DEFINED will not be displayed in the message.

DORMANT
Displayed when the member that is up and running but has not recently accessed the JES2 checkpoint.

DOWN
Displays only TERMINATED, DRAINED or FAILED members.

Note: This parameter is only a filter. You can specify this status but DOWN will not be displayed in the message.

DRAINED
Displayed when JES2 is no longer available and all work has been reset.

FAILED
Displays all members that have a status of JES2-FAILED, JESXCF-FAILED or MVS-GONE.

Note: This parameter is only a filter. You can specify this status but FAILED will not be displayed in the message.

INITIALIZING
Displayed when the member is in the process of initializing.

INUSE
Displays only ACTIVE, INITIALIZING, TERMINATING and DORMANT members.

Note: This parameter is only a filter. You can specify this status but INUSE will not be displayed in the message.

JES2-FAILED
Displayed when JES2 abends. Indicates that the address space is no longer available.

JESXCF-FAILED
Displayed when JES2 abends. Indicates that JESXCF is no longer available.

MVS-GONE
Displayed when the MVS system that JES2 was running on is no longer available and a $E MEMBER is required.

TERMINATED
Displayed after a $PJES2,TERM is issued. Specifies that JES2 is no longer available and a $E MEMBER is required.

TERMINATING
Displayed when JES2 is in the process of terminating.

UNDEFINED
Displayed when the member has not been defined through a MEMBER(n) initialization statement.

UNDEFINED-PENDING
Displayed when the member was previously defined through a MEMBER(n) initialization statement, but is in the process of having its definition deleted by another member in initialization.

WAITING-WARMSTART-CLEANUP
Display members for which warmstart processing has completed with some jobs still pending processing.

SYSNAME[=system-name]
Specifies that the system name of the MVS image of the member is to be displayed. You can also specify wildcards on this parameter. See “Using Wildcards” on page 93 for additoinal information.

The system name will not be displayed if it is equal to the member name (NAME=) or if the member is inactive.

VERSION=version
Indicates the version of the JES2 release that is running on this member.

Authority Required

This command requires **system** authority. The description of the $T RDRnn command explains how to ensure the proper MVS system command group authority is assigned.

This command requires **control** security access authority. For a description of assigning command input authority, see *z/OS JES2 Initialization and Tuning Guide*.

Scope

MAS-Wide. This command has an effect across the entire MAS.

Messages

JES2 issues either the $HASP673 message.

Example

1 `$t member(sys3),ind=y`

```
$HASP673 MEMBER(2)    NAME=SYS3,STATUS=ACTIVE,IND=YES,
$HASP673              LASTART=(ALL-MEMBER-WARN,(1997.134,12:54:30)),
$HASP673              SYSNAME=SY1,TIME=(1997.136,19:08:00.77),
$HASP673              VERSION=OS 2.4.0,SLEVEL=0,SSNAME=JES2,
$HASP673              BOSS=YES
```

The member to which the entering console is attached is placed in independent mode.

$T NJEDEF - Control JES2 Network Environment

Function

To specify the JES2 network environment.

Syntax

```
►►──$T──NJEDEF──┬──────────────────────────────────────────────────────────────────────────────►
                │ ,DELAY=nnn │ │                                │ │ ,MAILMSG=──┬─No─┬──┬──────────┬──►
                │            │ │                ┌──────────────┐ │            └─Yes┘  │          │
                │            │ │ ,HDRBUF=(──┬──┬──┬──LIMIT=nnnn──┬──┬──)──┬──────┬──┬──────────┬──┘
                │            │ │            │  │  │  │           │  │     │      │  │          │
                │            │ │            │  │  │  └──WARN=nnn──┘  │     │      │  │          │
                │            │ │            │  │  │                  │     │      │  │          │
►──┬──────────┬──┬──────────┬──┬──────────┬──┬──────────┬──┬──────────┬──┬──────────┬──┬──────►◄
   │ ,MAXHOP=nnnn │ │ ,RESTMAX=nnnnnnnn │ │ ,RESTNODE=nnnn │ │ ,RESTTOL=nnnn │ │ ,TIMEtol=nnnn │
   └──────────────┘ └───────────────────┘ └────────────────┘ └──────────────┘ └───────────────┘
```

Parameters

DELAY=nnn
The maximum length of time, in seconds (10-999) that a message or command is delayed in any stage of transmission between nodes before the system assumes that possible lockout situations have occurred. When this time interval expires, the system discards messages and commands in an attempt to clear the congestion and remove the lockout situation.

HDRBUF={LIMIT|WARN}
Allows installations to control the amount of storage used by NJE headers and trailers.

LIMIT=nnnn
The maximum number (10-9999) of NJE header and trailer cells allocated at this installation for jobs and SYSOUT data received from the network.

This command can increase, but not decrease, this value.

WARN=nnn
Specifies the percentage (0-100) of NJE header and trailer cells at use in an installation. If use of NJE header and trailer cells reaches or exceeds the number specified, JES2 processing notifies the operator by issuing a $HASP050 message.

If 0 is specified, the $HASP050 message is not issued.

MAILMSG={No|Yes}
Specifies whether (YES) or not (NO) JES2 issues the $HASP549 mail notification message automatically to notify a userid that a transmitted file has arrived from another node or a spool reload procedure.

If EXIT 13 passes back a return code of 8 or 12, this parameter is ignored. For more information about EXIT 13, see *z/OS JES2 Installation Exits*.

MAXHOP=nnnn
The maximum number of nodes (0-32k) a job or output can cross to reach a destination. You can determine this variable through the following algorithm: length of the system x 2 + 2. The $HASP528 message is issued when a job has exceeded this parameter. If you specify 0, no comparison is done. If you specify 32k, JES2 checks indefinitely.

RESTMAX=nnnnnnnn|79992000

The maximum tolerable resistance (0 to 79992000) of a connection. If the resistance of a path is greater than the value specified in RESTMAX, the path will be ignored.

Specifying lower values on this parameter tends to eliminate longer paths; use low values when a system should wait for better connections before attempting to communicate with nodes connected through inefficient paths. (For more information see, *z/OS JES2 Initialization and Tuning Guide*.)

Note: This parameter applies to both adjacent and non-adjacent nodes.

RESTNODE=nnnn|100

Specifies the resistance (1-2000) of this node to the flow of jobs through the network. This value provides half of this node's resistance, which is combined with the resistance of node at the other end of the connection to establish a connection's total resistance.

High values of RESTNODE tend to make JES2 systems choose other paths rather than come through this system's node (see *z/OS JES2 Initialization and Tuning Guide* for more information).

RESTTOL=nnnn|0

The maximum difference in resistance (0-8000) allowed between the best possible path and an acceptable alternate path. This value has no meaning unless the value specified in the PATH parameter is greater than 1.

If the value of RESTTOL is greater than or equal to the minimum resistance between any two nodes within the network, jobs and messages may be transmitted throughout the network in an erratic fashion. (For more information, see *z/OS JES2 Initialization and Tuning Guide*.)

TIMEtol=nnnn|1440

Specifies in approximate minutes the time (0 - 1500) allowed between the TOD clock of this node and any adjacent node. For example, if you specify TIMETOL=60 and an adjacent node attempts a sign on to your node with a clock that differs from yours by 60 minutes or less, the sign on is successful. If the adjacent node's clock differs from yours by significantly more than 60 minutes, the sign on fails.

You supply a TIMEtol= value (or accept the default value) so that JES2 can determine whether to accept status information about any node in the network or permit a sign-on.

During JES2 processing, if a record is received with a future timestamp, but the time does not differ from the TOD clock value by more than the TIMEtol=value, JES2 accepts the record. If the timestamp is in the future by an amount that is significantly greater than the TIMEtol= value, JES2 rejects the record. For network topology records, rejection results in the record being ignored (with an error message). For network sign on records, the sign on to the adjacent node fails.

Authority Required

This command requires **system** authority. The description of the $T RDRnn command explains how to ensure the proper MVS system command group authority is assigned. The $T NODE(nnnn) command sets the command authority for a node.

This command requires **control** security access authority. For a description of assigning command input authority, see *z/OS JES2 Initialization and Tuning Guide*.

Scope

Single Member. This command will be in effect for this member only.

Depending on your installation's setup, however, you might want this command to be applied to all members of the MAS (to ensure a consistent environment across the MAS). If so, you can use the MVS ROUTE *ALL command to issue this command to all active members (if the JES2 command character is the same on all members). See *z/OS MVS System Commands* for more information on using the ROUTE *ALL command.

Messages

The $HASP831 message displays the current values of all the parameters on the NJEDEF initialization statement.

Examples

1 `$t njedef,delay=340`

```
$HASP831 NJEDEF  OWNNAME=POK,OWNNODE=1,DELAY=340,
$HASP831         HDRBUF=(LIMIT=10,WARN=80,FREE=10),JRNUM=1,
$HASP831         JTNUM=3,SRNUM=4,STNUM=3,LINENUM=3,MAILMSG=NO,
$HASP831         MAXHOP=0,NODENUM=5,PATH=1,RESTMAX=79992000,
$HASP831         RESTNODE=100,RESTTOL=0,TIMETOL=1440
```

JES2 delays messages and commands for a maximum of 340 seconds before the system assumes a possible lockout situation and discards them.

2 `$t njedef,maxhop=300`

```
$HASP831 NJEDEF  OWNNAME=POK,OWNNODE=1,DELAY=340,
$HASP831         HDRBUF=(LIMIT=10,WARN=80,FREE=10),JRNUM=1,
$HASP831         JTNUM=3,SRNUM=4,STNUM=3,LINENUM=3,MAILMSG=NO,
$HASP831         MAXHOP=300,NODENUM=5,PATH=1,RESTMAX=79992000,
$HASP831         RESTNODE=100,RESTTOL=0,TIMETOL=1440
```

JES2 displays that a job or output can cross up to 300 nodes to reach a specific destination.

3 `$t njedef,maxhop=10`

```
$HASP831 NJEDEF  OWNNAME=POK,OWNNODE=1,DELAY=340,
$HASP831         HDRBUF=(LIMIT=10,WARN=80,FREE=10),JRNUM=1,
$HASP831         JTNUM=3,SRNUM=4,STNUM=3,LINENUM=3,MAILMSG=NO,
$HASP831         MAXHOP=10,NODENUM=5,PATH=1,RESTMAX=79992000,
$HASP831         RESTNODE=100,RESTTOL=0,TIMETOL=1440
```

JES2 displays that a job or output can cross no more than 10 nodes to reach a specific destination.

4 `$t njedef,mailmsg=yes`

```
$HASP831 NJEDEF  OWNNAME=POK,OWNNODE=1,DELAY=340,
$HASP831         HDRBUF=(LIMIT=10,WARN=80,FREE=10),JRNUM=1,
$HASP831         JTNUM=3,SRNUM=4,STNUM=3,LINENUM=3,MAILMSG=YES,
$HASP831         MAXHOP=10,NODENUM=5,PATH=1,RESTMAX=79992000,
$HASP831         RESTNODE=100,RESTTOL=0,TIMETOL=1440
```

JES2 displays that the mail notification message is sent to TSO/E userids whenever another node or spool reload procedure transmits mail to this node.

5 `$t njedef,hdrbuf=(limit=20,warn=85)`

```
$HASP831 NJEDEF  OWNNAME=POK,OWNNODE=1,DELAY=340,
$HASP831         HDRBUF=(LIMIT=20,WARN=85,FREE=20),JRNUM=1,
$HASP831         JTNUM=3,SRNUM=4,STNUM=3,LINENUM=3,MAILMSG=YES,
$HASP831         MAXHOP=10,NODENUM=5,PATH=1,RESTMAX=79992000,
$HASP831         RESTNODE=100,RESTTOL=0,TIMETOL=1440
```

JES2 displays that 20 cells have been allocated for building NJE header and trailer cells. JES2 will issue the $HASP050 message when 85% of these cells have been used.

$T NODE(nnnn) - Set a Node's Characteristics

Function

To set or reset the characteristics of the specified node(s).

One or more parameters on this command accepts wildcards. Parameter descriptions will note that.

Syntax

```
►►─$T─NODE─┬─nnnnn─┬──────────┬──────────────────────────────────────────────►
           │       └─-─┬─nnnnn─┬─┘                                            │
           │           └─*─────┘                                              │
           ├─'xxxxxxxx'──────────────────────────────────────────────────────┤
           │                                                                  │
           │       ┌──,──────────────────────────────────────────┐            │
           │       ▼                                             │            │
           └─(──────┬─nnnnn─┬──────────┬──────────────────────┬──────────)─┘
                    │       └─*─────┘  │                      │
                    │                  └─-─┬─nnnnn─┬──────────┘
                    │                      └─*─────┘
                    ├─xxxxxxxx──────────────────────────────────┤
                    └─'xxxxxxxx'────────────────────────────────┘

►─┬─Selection limiting keywords─┬──────────────────────────────────────────►
  └─────────────────────────────┘

►─┬─Modification keywords─┬──────────────────────────────────────────────►◄
  └───────────────────────┘
```

Modification keywords:

```
├─┬──────────────────────────────────────────────────────────────┬─┬──────────────┬─┬──────────────┬─┬──────────────┬──►
  │                                                              │ │ ,COMPACT=nn  │ │ ,ENDNODE=─┬─No─┬─│ ,HOLD=─┬─JOBS─┬─│
  │       ┌──,──────────────────────────────────────────────┐   │ │              │ │           └─Yes┘ │ │        └─NONE┘ │
  │       ▼                                                 │   │ │              │ │                  │ │                │
  └─,AUTH=(──┬─Device=─┬─No─┬──────────┬──────────────────────┬─)─┘ │              │ │                  │ │                │
             │         └─Yes┘          │                      │   │              │ │                  │ │                │
             ├─Job=────┬─No─┬──────────┤                      │   │              │ │                  │ │                │
             │         └─Yes┘          │                      │   │              │ │                  │ │                │
             ├─Net=────┬─No─┬──────────┤                      │   │              │ │                  │ │                │
             │         └─Yes┘          │                      │   │              │ │                  │ │                │
             └─System=─┬─No─┬──────────┘                      │   │              │ │                  │ │                │
                       └─Yes┘                                 │   │              │ │                  │ │                │

►─┬─────────────┬─┬─────────────────┬─┬─────────────┬─┬─────────────┬──────────►
  │ ,LINE=nnnn  │ │ ,LOGMODE=avvvvvvv │ │ ,LOGON=logon │ │ ,NAME=xxxxxxxx │
  └─────────────┘ └─────────────────┘ └─────────────┘ └─────────────┘

►─┬──────────────────────────────────────────────────────────────┬─┬──────────────┬─┬──────────────┬──────────────────►
  │                                                              │ │ ,PATHMGR=─┬─No─┬─│ ,PENCRYPT=─┬─No─┬─│
  │       ┌──,──────────────────────────────────────────────┐   │ │           └─Yes┘ │ │            └─Yes┘ │
  │       ▼                                                 │   │ │                  │ │                  │
  └─,Password=(──┬─SEND=xxxxxxxx─┬──────────────────────────┬─)─┘ │                  │ │                  │
                 └─VERify=xxxxxxxx┘                          │   │                  │ │                  │

►─┬─────────────┬─┬─────────────┬─┬─────────────┬─┬─────────────┬──────────────────►
  │ ,PRIVATE=─┬─No─┬─│ ,RECeive=─┬─BOTH───┬─│ ,REST=nnnn │ │ ,SENTREST=─┬─ACCEPT─┬─│
  │           └─Yes┘ │           ├─JOBS───┤ │             │ │            └─IGNORE─┘ │
  │                  │           ├─NONE───┤ │             │ │                       │
  │                  │           └─SYSOUT─┘ │             │ │                       │

►─┬─────────────┬─┬─────────────┬─┬─────────────┬──────────────────────────────┤
  │ ,SUBnet=SUBNET │ │ ,TRace=─┬─No─┬─│ ,TRAnsmit=─┬─BOTH───┬─│
  └─────────────┘ └─────────────┘ │ │            ├─JOBS───┤ │
                                  └─Yes┘ │            ├─NONE───┤ │
                                         │            └─SYSOUT─┘ │
```

Selection limiting keywords:

$T NODE(nnnn)

```
|──┬──────────────
```

- Wildcards to specify a generic symbolic range (for example, POK* implies all defined nodes whose names begin with POK) or a generic value (for example, * implies node 1 to the highest numbered node as specified by the NODENUM parameter on the NJEDEF initialization statement). For example, NODE(*). See “Using Wildcards” on page 93 for additional information.

Note: To change the name of the node (NAME=), you must specify a numeric value as the subscript.

AUTH=([Device=No|Yes[]Job=No|Yes] [Net=No|Yes][System=No|Yes])
Specifies the types of commands that the indicated node has authority to issue to the local node.

Device={No|Yes}
If Device=Y and Net=Y is also specified, the node has authority to issue device commands to the local node.

If Device=N is specified, the node does not have device command authority.

Job={No|Yes}
If Job=Y and Net=Y is also specified, the node has authority to issue job-related commands to the local node. If Job=Y and Net=N is specified, the node can control only those jobs on the local node that it owns.

Note: A node is considered to own a job if the job originated at that node or if the job’s default print and/or punch output is for that node.

If Device=N is specified, the node does not have job command authority.

Net={No|Yes}
If Net=Y is specified, the node has authority to issue all types of commands from its system console to the local node (except for those commands that are always prohibited when they originate from another node).

If Net=N is specified, the node can control only those jobs on the local node that it owns (providing Job=Y is also specified).

Note: A node is considered to own a job if the job originated at that node or if the job’s default print and/or punch output is for that node.

System={No|Yes}
If System=Y is specified and Net=Y is also specified, the node has authority to issue system commands to the local node.

If System=N is specified, the node does not have system command authority.

Notes:

1. If you specify N for every AUTH= subparameter, the indicated node has no specific command authority, and the local node honors only those few commands requiring no authority (for example, display commands).
2. Network authority requires having system, job, or device authority *in addition to* network authority to have system, job, or device commands take affect at another node.
3. In a multi-access spool configuration, you should enter the $T NODE(nnnn),AUTH= command on each member of the node because each member maintains its own version of the node information table.

COMPACT=nn
The compaction table number (0-99) used for outbound compaction in communicating with the specified node. Zero denotes no compaction.

ENDNODE={No|Yes}
Specifies whether the node is to be considered eligible for use in store-and-forward operations.

Yes Indicates that the node is to be considered ineligible for use in store-and-forward operations.

By specifying ENDNODE=YES for a local node, you ensure that path manager connect records are not sent from your node to adjacent nodes.

No Indicates that the node is to be considered eligible for use in store-and-forward operations.

HOLD={JOBS|NONE}
Specifies whether the local node holds jobs (HOLD=JOBS) or does not hold jobs (HOLD=NONE) received from the specified node.

LINE=nnnn
Specifies a line to be dedicated to the NJE session associated with this node. The subscript is specified as a numeric value (1-32767).

LOGMODE=avvvvvvv
Specifies the logon mode table entry name for this application. This name will determine which entry in the VTAM application logon mode table is to be used to provide a set of session parameters for the application program if the program participates as the secondary end of a session. This parameter is valid only for NJE applications. The name specified should follow the VTAM naming conventions for a logon mode table entry name.

LOGON=logon
Specifies the number (1-999) of the local LOGON DCT which should be used when specifying connections to the application. The default value of 0 indicates that the LOGON DCT defined with the lowest number is to be used.

NAME=xxxxxxxx
Specifies the 1 to 8 alphanumeric or special ($, #, or @) characters that symbolically defines the node. A DEStid initialization statement defining this name is not required.

Notes:

1. To change the name of the node, you must specify a numeric value as the subscript, and the node must not be active (connected to the local node). No static connections involving that node may exist, nor any connections with a RESTMAX state.

   Issue the command **$D CONNECT,NA=oldname,STATIC=YES** to determine the connections. If they exist, use the **$DEL CONNECT** command to remove them, and then retry the $T NODE command.

   If you receive the $HASP003 error message, then check for RESTMAX connections by issuing the command:**$D CONNECT,NA=oldname,STATE=RESTMAX** Note these connections, then INOP the lines to the nodes that are causing the RESTMAX state condition to exist with the command: **$ELNEx** If too many of these connections exist, then you may find it prudent to shutdown ALL lines by issuing the command: **$ELNEx(*)** or, **HOTSTART JES2** and effectively shutdown this NJE node.

Now that the node is fully inactive, proceed with the command:
$TNODE(xx),NAME=newname $TDESTID(oldname),DEST=oldname

2. If you issue a $T NODE to change the name of an existing node, you must first issue a $T DESTID command specifying the new node number. All old node names remain on the system as destids until the member is warm started.
3. When using the spool offload facility, be certain that the node name of the offloaded system is known to the reloading system. If these names do not match, unpredictable routing of jobs and SYSOUT data can occur on the reloading system. ANY unresolved routing results in jobs or SYSOUT data executing or printing locally.
4. $T of nodename cannot be used if the NODE(nnnn) to be altered is OWNNODE.
5. If any inactive connections involving this node exist, they will be deleted to avoid sending erroneous information about the new node name into the network.
6. Before defining a node name that starts with a numeric character, ensure that all nodes in your network support node names that start with numeric characters, that is, the nodes are at JES2 SP5.1 or higher.
7. When naming a node, avoid names that consist only of 1 to 4 digit numbers (for example, NAME=3 or NAME=246). This can cause confusion when the name is used in commands or displayed in messages.

   To reduce any possibility of confusion if you must use 1 to 4 digit numbers for the name, pad the name to the left with 0s (for example, NAME=00000246).

   Using the following initialization statements, the command examples below help you to understand the effect of specifying a name that consists of four or less digits.

   ```
   NODE(3)   NAME=246
   NODE(246) NAME=POKIPSY
   ```

   If you enter: $T NODE(3)

   JES2 modifies the third node (NAME=246).

   If you enter: $T NODE(POKIPSY)

   JES2 modifies the 246th node (NAME=POKIPSY).

   If you enter: $T NODE(246)

   JES2 modifies the third node (NODE(3) NAME=246), not NODE(246) NAME=POKIPSY.

Password=[SEND=xxxxxxxx|[VERify=xxxxxxxx]

If you specify both SEND and VERify, use a comma to separate the subparameters, and enclose them in parenthesis.

SEND

The 1 to 8 character password sent to a node by an NJE connection.

VERify

The 1 to 8 character password received from a node by an NJE connection.

Notes:

1. If the specified node is equal to the value of the OWNNODE parameter on the NJEDEF statement, the password is transmitted to other systems so that the system authorization may be verified.
2. If you specify a null password (P=VER=, SEND= or both), JES2 deletes the previously assigned password.
3. Be certain to make a note of the password assigned because there is no facility for displaying the current passwords.

PATHMGR={No|Yes}
Indicates whether NCC records relevant to the path manager should be sent to this node. If the node is not a directly adjacent node, this parameter is not used.

NO Indicates that Reset(“L”), Concurrence(“K”), Add(“M”), and Subtract (“N”) NCC records are not sent to this adjacent node.

YES Indicates that all relevant NCC records are passed to this adjacent node.

Note: If you specify PATHMGR=, the connection must be inactive.

PENCRYPT={No|Yes}
Specifies whether or not passwords are to be encrypted for jobs destined to the specified node.

PRIVATE={No|Yes}
Indicates whether the connection between this node and an adjacent node is broadcast to the rest of the network. This parameter is not used if the node is not a directly adjacent node.

NO Indicates that the connection is considered public; Any Add (“M”) and Subtract(“N”) records for this connection are broadcast to all adjacent path manager nodes.

YES Indicates that the connection is considered private; Any Add (“M”) and Subtract(“N”) records for this connection are not broadcast to adjacent nodes.

RECeive={BOTH|JOBS|NONE|SYSOUT}
Specifies what the local node (as specified by the OWNNODE parameter on the NJEDEF initialization statement) receives from the specified node.

BOTH
The local node receives both jobs and SYSOUT data from the specified node.

JOBS
The local node receives only jobs from the specified node.

NONE
The local node does not receive any data from the specified node.

SYSOUT
The local node receives only SYSOUT data from the specified node.

REST=nnnn
An integer (0-2000) that represents the resistance rating of the connection as viewed by the installation manager and coordinated with other installations. See *z/OS JES2 Initialization and Tuning Reference* for details about selecting resistances.

Default: 0. Note that, although 0 is the default, it cannot be specified.

SENTREST={ACCEPT|IGNORE}
The total resistance of a connection is comprised of the partial resistance of the local node *plus* the partial resistance of the node to which you are making a connection. When a connection is established between the local node and another node (that is, the node you specify on this NODE(nnnn) statement), SENTREST=ACCEPT specifies that the partial resistance sent to the local node during signon processing is to be added to the partial resistance calculated by the local node to determine the total resistance of the connection. SENTREST=IGNORE specifies that only the partial resistance calculated at the local node is to be used to calculate the total resistance of the connection. The partial resistance sent by the other node is ignored. This keyword only applies if PATHMGR=NO. This keyword is useful when the node being connected to, cannot control the resistance being sent during signon processing.

SUBnet=xxxxxxxx
Specifies the 1 to 8 alphanumeric or special ($, #, or @) character name of the subnet that should include this node. Information about connections between two nodes in the same subnet are not passed between nodes outside that subnet.

TRace={No|Yes}
Specifies whether or not NCC records to and from the direct connection to the specified node should be traced.

Tracing is activated if trace IDs 21, 22, 23, and 24 are currently enabled.

NO Indicates that trace records are not to be written

YES Indicates that trace records are to be written

TRAnsmit={BOTH|JOBS|NONE|SYSOUT}
Specifies what type of data the local node (as specified by the OWNNODE parameter on the NJEDEF initialization statement) transmits to the specified adjacentnode.

BOTH
The local node transmits both jobs and SYSOUT data to the specified node.

JOBS
The local node transmits only jobs to the specified node.

NONE
The local node does not transmit any data to the specified node.

SYSOUT
The local node transmits only SYSOUT data to the specified node.

Authority Required

This command requires **system** authority. The description of the $T RDRnn command explains how to ensure the proper MVS system command group authority is assigned. The $T INTRDR command sets the command authority for internal readers.

This command requires **control** security access authority. For a description of assigning command input authority, see *z/OS JES2 Initialization and Tuning Guide*.

Scope

The scope of this command varies by parameter.

The value supplied for LINE parameter will be in effect for this member only; there is no need to have this parameter issued to all members of the MAS.

The values supplied for all other parameters will be in effect for this member only. Depending on your installation's setup, however, you might want the parameters for this command to be applied to all members of the MAS (to ensure a consistent environment across the MAS). If so, you can use the MVS ROUTE *ALL command to issue this command to all active members (if the JES2 command character is the same on all members). See *z/OS MVS System Commands* for more information on using the ROUTE *ALL command.

Messages

The $HASP826 message displays the current values of all the parameters on the NODE(nnnn) initialization statement.

Examples

1 `$t node(5),name=newyork,hold=none,rec=jobs`

```
$HASP826 NODE(5) NAME=NEWYORK,STATUS=(UNCONNECTED),
                 AUTH=(DEVICE=YES,JOB=YES,NET=NO,
                 SYSTEM=NO),TRANSMIT=BOTH,
                 RECEIVE=JOBS,HOLD=NONE,REST=0,
                 PENCRYPT=NO,REST=0,COMPACT=0,
                 LINE=0,LOGMODE=,PASSWORD=(VERIFY=
                 (NOTSET),SEND=(NOTSET)),PATHMGR=YES,
                 PRIVATE=NO,SUBNET=,TRACE=NO
```

JES2 updates the characteristics for node 5, who's new symbolic name is NEWYORK. The local node receives only jobs from node 5 and it does not hold these jobs. The STATUS= parameter shows that node 5 is not currently connected to the local node. The PASSWORD= parameter shows that the password was nullified when this node was defined or changed.

2 `$t node(pok*),auth=(device=n,job=y),tra=both`

```
$HASP826 NODE(1) NAME=POK,STATUS=OWNNODE,
                 AUTH=(DEVICE=NO,JOB=YES,NET=NO,
                 SYSTEM=YES),TRANSMIT=BOTH,
                 RECEIVE=BOTH,HOLD=NONE,PENCRYPT=NO,
                 REST=0,COMPACT=0,LINE=0,
                 LOGMODE=,PASSWORD=(VERIFY=(NOTSET),
                 SEND=((NOTSET)),PATHMGR=YES,PRIVATE=NO,
                 SUBNET=,TRACE=NO
```

JES2 changes the command authorities for all nodes whose names begin with POK (in this case, node 1). These nodes are authorized to issue job-related commands to the local node, but they cannot affect local devices. The local node now transmits both jobs and SYSOUT data to node 1. The STATUS= parameter shows the individual node's connection status with the local node.

$T NUM - Set the JES2 Internal Job Numbers

Function

To set or reset the JES2 job number base.

Syntax

```
►►──$T──NUM──,BASE=nnnnn──────────────────────────────────────────────────►◄
```

Parameters

BASE=nnnnn
The new job number base (1-999999). JES2 assigns nnnnn to the next job entering the system unless nnnnn has already been assigned to a job. If the value of nnnnn is in use, JES2 assigns the new job the next available job number beyond the value of nnnnn.

Authority Required

This command requires **system** authority. The description of the $T RDRnn command explains how to ensure the proper MVS system command group authority is assigned. The $T INTRDR command sets the command authority for internal readers.

This command requires **control** security access authority. For a description of assigning command input authority, see *z/OS JES2 Initialization and Tuning Guide*.

Scope

MAS-Wide. This command has an effect across the entire MAS.

Messages

The $HASP609 message displays the new job number base.

Example

```
1  $t num, base=1000

  $HASP609 NUMBER SET TO 1000
```

If the number 1000 is not in use, JES2 assigns 1000 to the next job in the system. If there is currently a job numbered 1000 in the system, JES2 assigns the next available job number.

$T O Job - Set Output Characteristics

Function

To set the output characteristics for one or more job output elements belonging to the specified job(s).

Syntax

```
►►──$T O──┬─Job──────┬──┬──────────────────────────────────────────────────────┬──┬─ Selection limiting keywords ─┬──►
          ├─JOBQ─────┤  ├─job_id──┬──────────────┬──────────────────────────────┤  └───────────────────────────────┘
          ├─JQ───────┤  │          └──-──┬─job_id─┬──┬──────────────────────────┤
          ├─Stc──────┤  │                └──*─────┘  │                          │
          └─Tsu──────┘  ├─'jobname'──────────────────┤                          │
                        │                            │                          │
                        │   ┌──,──────────────────────┐                         │
                        │   ▼                         │                         │
                        └──(──┬─job_id─┬──┬──────────┬──┬──────────────────────┤
                              │        │  │          │  │                      │
                              │        │  │          │  │                      │
                              │        │  │          │  │                      │
```

```
►──┬──────────────────────────────────────────────────────────────────────────────────────────────────────────────────►
   │ ,──┬──/──FLash──┬──┬──=──┬──xxxx──┬  ,──/──Forms──┬──┬──=──┬──xxxxxxxx──┬  ,──┬──────┬──HELD──┬
   │    │            │  │     ├──^=──┤                │  │     ├──^=──┤        │    │      │        │
   │    │            │  │     ├──>───┤                │  │     ├──>───┤        │    │      │        │
   │    │            │  │     ├──<───┤                │  │     ├──<───┤        │    │      │        │
   │    │            │  │     │      │                │  │     │      │        │    │      │        │
   │    │            │  │     │      │                │  │     │      │        │    │      │        │
   │    │            │  │     │      │                │  │     │      │
```

Notes:

1 *offs* can be coded up to 8 times

Parameters

job
Specifies 1 to 8 alphanumeric, special ($, #, or @) or wildcard characters (or a combination of them) that can be used to select a subset of jobs whose job name matches this combination of characters (mask).

'job'
The name of the job that is to be set. This name must appear as coded on the JOB statement and must be enclosed in apostrophes. If more than one job exists with this name, no action is taken.

Job
A Batch job or range of batch jobs is to be set.

JOBQ|JQ
Specifies *all* jobs, STCs, and TSUs across the MAS for processing.

Stc
A started task or range of started tasks is to be set.

Tsu
A time-sharing user or range of time-sharing users is to be set.

Age|DAys<days | Age|DAys>days
Specifies the age of affected output in days. Only output more (with DAYS>nn) or less (with DAYS<nn) than the specified number of days in age are affected, The days are counted from the current hour.

ALL
JES2 modifies all job output elements belonging to the specified job.

Note: This parameter is positional and must immediate follow the jobid (JOB, STC, TSU), JOBQ or 'jobname' (or JOBMASK if coded) parameter.

B|BURST={No|Yes}
Specifies whether the printed output is to be burst into separate sheets (Yes) or to be in continuous, fanfold mode (No).

C|FCB={xxxx|**}**
A 1 to 4 alphameric character or special character ($ # @) identifier for the data set forms control or carriage specifications. Four asterisks (****) specifies that the output group is to be reset to the default setting specified by the installation.

Dest|Routecde=dest
The destination assigned to the job output element(s). You may specify a remote destination (workstation), another node, or a specific local device. The value for all routing numbers can range from 1 to 32767. For more information about valid specifications, see "Route Codes" on page 92.

If this command originates from another node in the network and the D|ROUTECDE= operand does not specify a node (first-level destination), the receiving node defaults the first-level destination to the node were the command originated.

If this command is sent to another node in the network using the $N command, be aware that the receiving node will default the node (first-level destination) of Dest|ROUTECDE= operand to the sending node. If another node is desired,

specify a destination on the Dest|ROUTECDE= operand that will resolve to the desired node (first-level destination) at the receiving node.

Notes:

1. If an output group is queued for transmission and an operator changes its destination, the userid portion of the routing is lost. If an output group is interrupted while printing and the destination is changed, the output group will begin printing from the top when it is printed at the new destination.
2. NODENAME=REQUIRED on the DESTDEF initialization statement will cause JES2 to require that a userid be prefixed with a node name.
3. Greater than (> or >=) and less than (< or <=) filters may be used in conjunction to support route code ranges. For example, you could specify the filters R>=R1,R<=R7 to affect output for all remotes in the range R1 to R7, Note that:
   - The destination being filtered upon is converted to its binary equivalent prior to the comparison.
   - Open-ended ranges (for example, a > filter without a < filter, or a < filter without a > filter) are not allowed.
   - When using nodal ranges, a specification of ″nodename.*″ must be used. Only the nodal routing of the output will be compared.

The following specifications are valid:

LOCAL|ANYLOCAL
Indicates that jobs are to be printed or punched at the local node.

destid Indicates that jobs are to be printed or punched at the specified node(s). You can specify this location by an alias for the name of a node. If destid is specified alone, it refers to both the node and the remote.

Nnnnn|nodename
Indicates that jobs are to be printed or punched at the specified node(s). You can specify a node using the decimal node identifier or an EBCDIC nodename.

NnnnnRmmmm|node.remote|node.userid
Indicates routing to the remote Rmmmm at the node Nnnnn. Rmmmm can also be specified as RMmmmm or RMTmmmm.

Ummmm
Indicates special local routing.

node.destid
Indicates a destination at the specified node. The destid refers to both the node and the remote. The node specified in the destid must be the same as the node portion of the route code. If the number of the remote is reassigned, you can use the destid to send to this node.

remote
Indicates routing to a remote. Remote can be specified in any of the following ways:

LOCAL|ANYLOCAL
Indicates that jobs are to be printed or punched at the local node.

Rmmmm
Indicates routing to the specified remote. Rmmmm can also be specified as RMmmmm or RMTmmmm.

destid Indicates routing to a destid referring to a remote.

userid Indicates routing to a valid TSO userid.

node.*
Indicates that the node name is to be modified to the specified node name, but the remote name will remain the same.

***** Indicates that the node name is to be modified to the local node name, but the remote name will remain the same.

F|Forms={xxxxxxxx| **}**
A 1 to 8 alphameric or special character ($ # @) identifier for the print or punch forms. Four asterisks (****) specifies that the output group is to be reset to the default setting specified by the installation.

HOLD={-OPER|-SYS|NONE|OPER}
This operand explicitly sets the operator HOLD type. The only hold type that can be set using this operand is OPER. This parameter prevents JES2 from selecting an output group for any processing other than purging. Specifying HOLD= for an output group is more restrictive than specifying an output group's output disposition. OUTDISP=HOLD or LEAVE prevents JES2 from selecting an output group for print/punch or external writer processing only.

Specifying the REL= parameter on this command makes the output available for processing.

H|Hours=hours
Specifies the age of affected output in hours. Only output more (with HOURS>nn) or less (with HOURS<nn) than the specified number of hours in age are affected.

FLASH|O={xxxx|**}**
A 1 to 4 alphameric or special character ($ # @) overlay name (FLASH). Four asterisks (****) specifies that the output group is to be reset to the default setting specified by the installation.

JOBMASK|JM=xxxxxxxx
Specifies 1 to 8 alphanumeric, special ($, #, or @) or wildcard characters (or a combination of them) that can be used to select a subset of jobs whose job name matches this combination of characters (mask). For a description of wildcards, see "Using Wildcards" on page 93.

Notes:

1. This is a positional parameter. Specify this following the job_id (JOB, STC, or TSU) or JOBQ parameter.
2. The JOBMASK parameter is not valid with the *'jobname '* parameter.

OUTDISP={H|HOLD|K|KEEP|L|LEAVE|P| PURGE|W|WRITE}
As a modification keyword, OUTDISP= indicates what the new output disposition should be for the specified job's output. Specify WRITE, HOLD, LEAVE, KEEP, or PURGE.

As a selection limiting keyword, OUTDISP= indicates that you wish to modify the output for the specified job that matches this current disposition. Specify, WRITE, HOLD, LEAVE, or KEEP.

Note: If you do not specify this parameter, all output with a disposition of WRITE, HOLD, KEEP, or LEAVE will be modified.

OUTGrp=grpid[.joeid1[.joeid2]]
The job output element(s) that are modified.

grpid
The 1 to 8 character alphameric group ID that is either specified by the user in the JCL or generated by JES2. If you specify only group ID (OUTGRP=grpid) on this command, JES2 modifies all the job output elements in that group.

joeid1
A number assigned by JES2 to distinguish between job output elements within the output group. If you specify only group ID and the first qualifier (OUTGRP=grpid.joeid1) on this command, JES2 modifies all copies of the specified job output element in that group.

joeid2
A number assigned by JES2 to distinguish between several copies of grpid.joeid1. If you specify group ID and both qualifiers (OUTGRP=grpid.joeid1.joeid2) on this command, JES2 modifies only the specified copy (joeid2) within the job output element (joeid1) in that group.

Note: This parameter is positional and must immediate follow the jobid (JOB, STC, TSU), JOBQ or 'jobname' (or JOBMASK if coded) parameter.

OFFS=(n[,n,n])|(+n,[n,n])|(-n,[n,n])|0
Specifies updates to the archival status of sysout for this job. Output will be marked as already offloaded for all offload device numbers that were specified and as not offloaded for all offload device numbers not specified.

Specifying **+** or **-** before the offload device number(s) updates offload status of the output for only the specified offload device numbers. Specifying **+** marks the output as offloaded and specifying **-** marks it as not having been offloaded. Use this option to allow offloading of output that have been already been offloaded or to prevent offloading of certain output.

P|PRIORITY=nnn
The queue selection priority (0-255) assigned to the job output element(s).

PAGEs=pages
Only jobs with the specified number of pages of output are modified.

PRMode=vvvvvvvv
The process mode (1 to 8 alphameric characters) for the job output element(s).

Q|QUEUE=c
The output class (A-Z and 0-9) assigned to the job output element(s).

READY
Only ready output groups are modified.

REBUILD={No|Yes}
Output on the rebuild queue is to be set (Yes) or not set (No).

RECords=records
Only output groups with the specified number of records are to be modified.

REL|RELease={ALL|SYS|OPER}
The operand used to explicitly clear one or more HOLD types. If you are only specifying one type, you may drop the parentheses. Parentheses are required, however, when you specify more than one type. You may use this operand to clear all HOLD types (OPER and SYS). In addition, you may use the type "ALL" to clear all holds applied against the specified output group(s).

SECLABEL=seclabel
Only output groups with the specified security label are to be modified.

TSOavail={No|Yes}
Only output which is (Yes) or is not (No) eligible for the TSO OUTPUT command is to be modified.

USERID=userid
Only output groups associated with the specified userid are to be modified.

T|UCS={xxxx|**}**
A 1 to 4 character alphameric or special character ($ # @) identifier for the universal character set specification. This will also set the character set (CHAR1) to be used on Non-Impact printers unless the UCS and CHARS values are both assigned to an output data set by a job's JCL and their values are not equal. Four asterisks (****) specifies that the output group is to be reset to the default setting specified by the installation.

W|Writer={xxxxxxxx|**}**
A 1 to 8 alphanumeric or special ($ # @) character write name assigned to the job output element(s). Four asterisks (****) specifies that the output group is to be reset to a null value.

Authority Required

This command requires **job** authority. The description of the $T RDRnn command explains how to ensure the proper MVS system command group authority is assigned.

This command requires **update** security access authority. For a description of assigning command input authority, see *z/OS JES2 Initialization and Tuning Guide*.

Processing Considerations

- If you use this command to change both the destination and other output characteristics, those changes to the other output characteristics are ignored for duplicate output groups (those groups created by specifying more than one job copy or by issuing the $N command to repeat the processing of an output group).
- If any of the characteristics that you specify on this command are also specified as work selection criteria with the WS= parameter on the device initialization statement or using the $T device command, then those characteristics are compared against the matching output device specifications; work is selected accordingly.
- If the following characteristics are modified, the output group will begin printing from the top when the output starts printing again.
  - Burst
  - FCB
  - Destination
  - Form
  - Overlay (Flash)
  - Process mode(PRMODE)
  - UCS
  - Writer name
- Once a held output group has been released (the output disposition is changed to WRITE or KEEP), the group is no longer available for processing by the TSO/E OUTPUT command For more information, see the $HASP686 message in *z/OS JES2 Messages*.

Scope

MAS-Wide. This command has an effect across the entire MAS.

Messages

The $HASP686 message displays the current output characteristics for each job output element specified.

Examples

1

```
$t o j17,outgrp=group2,outdisp=write,/outdisp=hold

JOB00017   $HASP686 OUTPUT(D15USER)   OUTGRP=GROUP2.2.1,BURST=NO,FCB=****,
           $HASP686                   FLASH=****,FORMS=STD,HOLD=(NONE),
           $HASP686                   HOLDRC=,OUTDISP=HOLD,PAGES=,
           $HASP686                   PRIORITY=144,PRMODE=LINE,QUEUE=A,
           $HASP686                   RECORDS=(1 OF 1),ROUTECDE=LOCAL,
           $HASP686                   SECLABEL=,TSOAVAIL=NO,UCS=****,
           $HASP686                   USERID=D15USER,WRITER=
```

JES2 assigns an OUTDISP value of HOLD to all the job output element(s) of the output group that is identified by GROUP2 with a disposition of WRITE and belongs to batch job 17.

2

```
$t o j12,all,hold=oper

JOB00012 00000090 $HASP686 OUTPUT(D15USERC) OUTGRP=2.1.1,BURST=NO,FCB=****,
           $HASP686                   FLASH=****,FORMS=STD,HOLD=(OPER),
           $HASP686                   HOLDRC=,OUTDISP=WRITE,PAGES=,
           $HASP686                   PRIORITY=144,PRMODE=LINE,QUEUE=A,
           $HASP686                   RECORDS=(38 OF 38),ROUTECDE=LOCAL,
           $HASP686                   SECLABEL=,TSOAVAIL=NO,UCS=****,
           $HASP686                   USERID=D15USER,WRITER=
           $HASP686 OUTPUT(D15USERC)  OUTGRP=1.1.1,BURST=NO,FCB=****,
           $HASP686                   FLASH=****,FORMS=STD,HOLD=(OPER),
           $HASP686                   HOLDRC=,OUTDISP=WRITE,PAGES=,
           $HASP686                   PRIORITY=144,PRMODE=LINE,QUEUE=A,
           $HASP686                   RECORDS=(1 OF 1),ROUTECDE=LOCAL,
           $HASP686                   SECLABEL=,TSOAVAIL=NO,UCS=****,
           $HASP686                   USERID=D15USER,WRITER=
```

JES2 places an operator hold on all job output elements that belong to batch job 12.

3

```
$T O J1-*,JM=IB*,OUTGRP=1.1.1,OUTDISP=WRITE,/OUTDISP=HOLD

JOB00102  $HASP686 OUTPUT(IBMUSERX)
$HASP686 OUTPUT(IBMUSERX)  OUTGRP=1.1.1,BURST=NO,FCB=****,
$HASP686                   FLASH=****,FORMS=STD,HOLD=(NONE),
$HASP686                   HOLDRC=,OUTDISP=HOLD,PAGES=,
$HASP686                   PRIORITY=128,PRMODE=LINE,QUEUE=A,
$HASP686                   RECORDS=(2139 OF 2139),
$HASP686                   ROUTECDE=LOCAL,SECLABEL=,TSOAVAIL=NO,
$HASP686                   UCS=****,USERID=IBMUSER,WRITER=
JOB00104  $HASP686 OUTPUT(IBMUSERY)
$HASP686 OUTPUT(IBMUSERY)  OUTGRP=1.1.1,BURST=NO,FCB=****,
$HASP686                   FLASH=****,FORMS=STD,HOLD=(NONE),
$HASP686                   HOLDRC=,OUTDISP=HOLD,PAGES=,
$HASP686                   PRIORITY=128,PRMODE=LINE,QUEUE=A,
$HASP686                   RECORDS=(2139 OF 2139),
$HASP686                   ROUTECDE=LOCAL,SECLABEL=,TSOAVAIL=NO,
$HASP686                   UCS=****,USERID=IBMUSER,WRITER=
```

JES2 assigns an OUTDISP value of HOLD to all the job output element(s) of the output group that is identified by GROUP 1.1.1 with a disposition of WRITE and belongs to all batch jobs, beginning with job 1, whose name begins with the characters IB.

4 `$T O JOB,OFFS=+4`

```
JOB00104  $HASP686 OUTPUT(IBMUSERY)
$HASP686 OUTPUT(IBMUSERY)  OUTGRP=1.1.1,BURST=NO,FCB=****,
$HASP686                   FLASH=****,FORMS=PUNCH,HOLD=(NONE),
$HASP686                   OFFS=(3,4),OUTDISP=WRITE,PRIORITY=7,
$HASP686                   PRMODE=LINE,QUEUE=B,
$HASP686                   RECORDS=(14 OF 14),
$HASP686                   ROUTECDE=LOCAL,SECLABEL=,TSOAVAIL=NO,
$HASP686                   UCS=****,USERID=IBMUSER,WRITER=,
```

5 `.TOJ17,/OUTDISP=WRITE,OUTDISP=HOLD`

```
JOB00017   .HASP686 OUTPUT(D15USER)   OUTGRP=1.1.1,BURST=NO,FCB=****,
           .HASP686                   FLASH=****,FORMS=STD,HOLD=(NONE),
           .HASP686                   OUTDISP=HOLD,PRIORITY=144,
           .HASP686                   PRMODE=LINE,QUEUE=A,
           .HASP686                   RECORDS=(50 OF 50),ROUTECDE=LOCAL,
           .HASP686                   SECLABEL=,TSOAVAIL=NO,UCS=****,
           .HASP686                   USERID=IBMUSER,WRITER=
```

JES2 assigns an OUTDISP value of HOLD to all the job output element(s) with a disposition of WRITE and belong to batch job 17.

6 `.TOJ17,OUTDISP=HOLD`

```
JOB00017   .HASP686 OUTPUT(D15USER)
           .HASP686 OUTPUT(D15USER)   OUTGRP=1.1.1,BURST=NO,FCB=****,
           .HASP686                   FLASH=****,FORMS=STD,HOLD=(NONE),
           .HASP686                   OUTDISP=HOLD,PRIORITY=144,
           .HASP686                   PRMODE=LINE,QUEUE=A,
           .HASP686                   RECORDS=(50 OF 50),ROUTECDE=LOCAL,
           .HASP686                   SECLABEL=,TSOAVAIL=NO,UCS=****,
           .HASP686                   USERID=IBMUSER,WRITER=
```

JES2 assigns an OUTDISP value of HOLD to all the job output element(s) that belong to batch job 17.

7

```
$tojq1-*,days>1,forms=dora

STC00003  $HASP686 OUTPUT(IRRDPTAB)
$HASP686 OUTPUT(IRRDPTAB)  OUTGRP=1.1.1,BURST=NO,FCB=****,
$HASP686                   FLASH=****,FORMS=DORA,HOLD=(NONE),
$HASP686                   OUTDISP=WRITE,PRIORITY=144,
$HASP686                   PRMODE=LINE,QUEUE=A,
$HASP686                   RECORDS=(53 OF 53),ROUTECDE=LOCAL,
$HASP686                   SECLABEL=,TSOAVAIL=NO,UCS=****,
$HASP686                   USERID=++++++++,WRITER=
```

JES2 changes form for any job on output queue with days greater than 1.

8

```
$tos1-*,hours>1,hold=oper
STC00003  $HASP686 OUTPUT(IRRDPTAB)
$HASP686 OUTPUT(IRRDPTAB)  OUTGRP=1.1.1,BURST=NO,FCB=****,
$HASP686                   FLASH=****,FORMS=DORA,HOLD=(OPER),
$HASP686                   OUTDISP=WRITE,PRIORITY=144,
$HASP686                   PRMODE=LINE,QUEUE=A,
$HASP686                   RECORDS=(53 OF 53),ROUTECDE=LOCAL,
$HASP686                   SECLABEL=,TSOAVAIL=NO,UCS=****,
$HASP686                   USERID=++++++++,WRITER=
```

JES2 changes hold type on any started task with hours greater than 1.

$T OFF(nn).JR - Set Offload Job Receiver Characteristics

Function

To specify the work selection and processing characteristics of the indicated offload job receiver(s).

One or more parameters on this command accepts wildcards. Parameter descriptions will note that.

Syntax

```
►►──$T──OFF──┬─nn──┬──────────┬──────────────────────────────┬──.JR──┬──────────────────────────────┬──►
             │     └─-──┬─mm─┬─┘                              │       └─┤ Selection limiting keywords ├─┘
             │          └─*──┘                                │
             │   ┌──────────────────────────────────┐         │
             └──(──┬─nn─┬──┬──────────┬──┬─────────┬──)──────┘
                   └─*──┘  └─-──┬─mm─┬─┘  │         │
                                └─*──┘    │         │
                                          │         │
►──┬──────────────────────────────┬──────────────────────────────────────────────────────────────►◄
   └─┤ Modification keywords ├────┘
```

Modification keywords:

```
├──┬──────────────────┬──┬──────────────────┬──┬──────────────────────┬──┬──────────────────────┬──►
   └─,CLass=class─────┘  └─,CReator=creator─┘  └─,Hold=──┬─No──┬──────┘  └─,JOBname=jobname──────┘
                                                         └─Yes─┘

►──┬──────────────────────────────────────────────┬──┬──────────────────┬──┬──────────────────────┬──►
   │   ┌──────────────────────────────────────┐   │  └─,NOTify=──┬─No──┬─┘  └─,RANGE=──┬─low──────────┬─┘
   └─,MOD=(──┬─CLass=class──────────────────────┬──)─┘              └─Yes─┘             │  ┌──────────┐  │
             │  ┌──────────────────────────┐    │                                       └─(─┬─────────┬─)─┘
             ├─Hold=──┬─No──┬──────────────┤    │                                           └─,high───┘
             │        └─Yes─┘              │    │
             ├─Routecde=routecde───────────┤    │
             └─SYSaff=sysaff───────────────┘    │

►──┬──────────────────────────────────────────────┬──┬──────────────────────────────────────────┬──►
   └─,Routecde=──┬─routecde──────────────────────┬─┘  └─,SYSaff=──┬─sysaff──────────────────────┬─┘
                 │  ┌──────────────────────┐     │                │  ┌──────────────────────┐   │
                 └─(──┬─routecde─┬──────────┬─)──┘                └─(──┬──────────────────┬──)──┘
                      │          │          │                          │      (1)         │
                      └──────────┘          │                          └──────sysaff──────┘
                                            │
►──┬──────────────────────────────────────────┬──┤
   └─,WS=──┬─ws──────────────────────────────┬─┘
           │  ┌──────────────────────┐       │
           └─(──┬─ws─┬──────────┬─)──┘
                │    │          │
                └────┘          │
                                │
```

Selection limiting keywords:

```
├──┬──────────────────────────────────────────┬──┬──────────────────────────────────────────┬──►
   └─,──/──CLass──┬──┬─class─┬──┬──┬─────┬──┬─┘  └─,──/──Hold──┬──┬──┬─────────┬──┬─────┬──┬─┘
                  │  │       │  │  │     │  │                   │  │  │         │  │     │  │
                  │  ├─^=────┤  │  ├─>───┤  │                   │  ├─^=──┘       │  ├─No──┤  │
                  │  ├─>─────┤  │  ├─<───┤  │                   │  │             │  └─Yes─┘  │
                  │  ├─<─────┤  │  └──────┘  │                   │  │             │           │
                  │  └──────┘  │            │                   │  │             │           │
                  │            │            │                   │  │             │           │
   ┌──────────────┴────────────┴────────────┴──────────────────┴──┴─────────────┴───────────┴─┐
   └─,──/──JOBname──┬──┬─jobname─┬──┬──┬─────┬──┬──────────────────────────────────────────┘
                    │  │         │  │  │     │  │
                    │  ├─^=──────┤  │  ├─>───┤  │
                    │  ├─>───────┤  │  ├─<───┤  │
                    │  ├─<───────┤  │  └──────┘  │
                    │  └────────┘  │            │
                    │              │            │
                    └──────────────┴────────────┘
```

```
►┬──────────────
```

those jobs with this jobname can be selected. You can also specify wildcards on this parameter. See “Using Wildcards” on page 93 for additional information.

If the jobname is not a criterion for job selection, specify a null parameter of (JOBname=) and do not specify JOBname in the WS= list.

MOD=
Defines modifications to the specified characteristics of pre-execution jobs that are selected for reloading. These modifications are assigned during the reload process. If you specify more than one of the following parameters, each must be separated by commas and the list must be enclosed in parentheses.

CLass=class
The new execution class of all pre-execution jobs that are loaded by this receiver. A null parameter of (CLass=) specifies that the execution class is not modified.

Hold={No|Yes}
Specifies whether or not pre-execution jobs are to be held when loaded. If you specify Y, all pre-execution jobs that are loaded are held until released for execution. If you specify N, all pre-execution jobs that are loaded are to be released for execution. A null parameter of (Hold=) specifies that the Hold specification is not modified.

Routecde=routecde
Specifies the node from which jobs loaded by this device are run.

LOCAL|ANYLOCAL
Indicates that jobs are to be run at the local node.

destid
Indicates that jobs are to be run at the specified node. This location can be specified by an alias.

Nnnnn|nodename
Indicates that jobs are to be run at the node specified by its decimal node identifier from 1 to 32767 or through an EBCDIC nodename.

If route code is not a criterion for job selection, specify a null parameter of (Routecde=()) and do not specify Routecde in the WS= list. You must specify the empty parentheses.

SYSaff=sysaff
The new affinity for all pre-execution jobs loaded by this receiver. ANY indicates the job can execute on any member in the JES2 complex. A null parameter of (SYSaff=) specifies that the affinity is not to be modified.

NOTify={No|Yes}
Specifies whether or not a notification message is sent to the TSO userid specified on the JOB statement or /*NOTIFY JECL. If you specify Y, a notification message is sent when a pre-execution job is loaded from the offload data set. If you specify N, no notification message is sent.

RANGE=low [-high]
The specific range of jobs that this device can select, if RANGE is also specified in the WS= list. The upper limit is the default value 2147483647. If you code this parameter, you can specify one or two values:

- If you specify one value, that value becomes both the low and the high end of the range.

- If you specify two values, the first value is the low end of the range and the second value the high end. The two values can be equal. If they are not equal, the second value must be larger than the first value.

Routecde=routecde
Specifies the execution node selection criteria for jobs to be loaded. Use commas to separate individual route codes and enclose the list in parenthesis if more than one route code is specified.

Note: NODENAME=REQUIRED on the DESTDEF initialization statement will cause JES2 to require that a userid be prefixed with a node name.

LOCAL|ANYLOCAL
Indicates that only jobs routed to the local node for execution can be selected.

destid
Indicates that only jobs routed to the specified location through an alias for the name of a node can be selected for execution.

Nnnnn|nodename
Indicates that only jobs routed to the specified location through the decimal node identifier from 1 to 32767 or through the EBCDIC nodename can be selected for execution.

If route code is not a criterion for job selection, specify a null parameter of (Routecde=()) and do not specify Routecde in the WS= list. You must specify the empty parentheses.

SCHenv=schenv
Specifies the 1 to 16 alphanumeric, special ($, #, or @), or wildcard character (or combination of them) scheduling environment. Only those jobs with this SCHENV will be selected.

SRVclass=srvclass
Specifies the 1 to 8 alphanumeric, special ($, #, or @), or wildcard character (or a combination of them) service class name. Only those jobs with this service class will be selected.

SYSaff=sysaff
The affinity selection criteria, if SYSaff is also specified in the WS= list.

memname
A specific member name. Jobs that have affinity for the specified member can be selected. You may specify up to 32 member names. Multiple member names must be separated by commas and the list must be enclosed in parentheses.

ANY
Jobs that have affinity for any member in the JES2 complex can be selected.

If affinity is not a criterion for job selection, specify a null parameter of (SYSaff=()) and do not specify SYSaff in the WS= list. You must specify the empty parentheses.

WS=ws
Specifies the work selection criteria for this device. Using any combination of user and JES2-defined criteria, you can specify up to 19 criteria in the WS= list. If a criterion is specified in the list, work selection is based on the current

setting of the corresponding parameter. If a criterion is not specified in the list, the criterion is not considered during work selection.

Specifying a minus sign (-) before the criterion causes that criterion to be removed from the list. Specifying a criterion that is not currently specified in the list adds it to the end of the list. Specifying a criterion currently in the list causes that criterion to be moved to the end of the list, thereby decreasing its priority. To correct a WS list that was erroneously changed by an incorrect operator command, remove any criterion that should not be in the list (specify a minus sign (-) before the criterion). If necessary, re-order the remaining criterion.

Notes:

1. You must always enclose the criterion or criteria in parentheses, for example, WS=(CLass).
2. If you specify more than one criterion, each must be separated by commas, for example, WS=(CLass,RANGE).
3. The slash (/) is not used for receiver criterion. All specifications are required to match and are assumed to be listed prior to a slash.
4. As with other work selection lists, priority for a criterion that specifies multiple values (Class, Routecde, and SYSaff) is in left to right priority order.

Authority Required

This command requires **system** authority. The description of the $T RDRnn command explains how to ensure the proper MVS system command group authority is assigned.

This command requires **control** security access authority. For a description of assigning command input authority, see *z/OS JES2 Initialization and Tuning Guide*.

Processing Considerations

- If you specify a null value for a characteristic that is currently specified in the work selection (WS=) list, for example, CLass=(), you must remove that criterion from the WS= list. If you do not remove the criterion from the WS= list, this device does not select any jobs.
- If you are uncertain of the characteristics in effect, enter the $D or $D U command for the particular offload job receiver.

Scope

Single Member. The values supplied for this command will be in effect for this member only.

Depending on your installation's setup, however, you might want this command to be applied to all members of the MAS (to ensure a consistent environment across the MAS). If so, you can use the MVS ROUTE *ALL command to issue this command to all active members (if the JES2 command character is the same on all members). See *z/OS MVS System Commands* for more information on using the ROUTE *ALL command.

Messages

The $HASP883 message displays the current settings of all the parameters on the OFF(n).JR initialization statement.

Examples

1

```
t off1.jr,hold=y,jobname=report,ws=(hold,jobname)

$HASP883 OFF1.JR
$HASP883 OFF1.JR STATUS=STARTABLE,CLASS=ABCDEFGH,CREATOR=,
$HASP883 HOLD=YES,JOBNAME=REPORT,MOD=(CLASS=,HOLD=,
$HASP883 ROUTECDE=,SYSAFF=),NOTIFY=NO,RANGE=(J1,
$HASP883 2147483647),ROUTECDE=(),SCHENV=,SRVCLASS=,
$HASP883 START=YES,SYSAFF=(),WS=(H,JOB/)
```

Offload receiver 1 selects only held jobs who's jobname is REPORT.

2

```
$t off1.jr,r=local

$HASP883 OFF1.JR
$HASP883 OFF1.JR STATUS=STARTABLE,CLASS=ABCDEFGH,CREATOR=,
$HASP883 HOLD=,JOBNAME=,MOD=(CLASS=,HOLD=,ROUTECDE=,
$HASP883 SYSAFF=),NOTIFY=NO,RANGE=(J1,2147483647),
$HASP883 ROUTECDE=(LOCAL),SCHENV=,SRVCLASS=,START=YES,
$HASP883 SYSAFF=(),WS=(CL/)
```

$T OFF(nn).JT - Set Offload Job Transmitter Characteristics

Function

To specify the work selection and processing characteristics of the indicated offload job transmitter(s).

One or more parameters on this command accepts wildcards. Parameter descriptions will note that.

Syntax

```
►►──$T──OFF──┬─nn──┬──────────┬──────────────────────────────────────┬──.JT──┬──────────────────────────────┬──►
             │     └─-──┬─mm─┬─┘                                      │       └┤ Selection limiting keywords ├┘
             │          └─*──┘                                        │
             │          ┌──────────────────────────────────────┐     │
             └──(──────▼──┬─nn─┬──┬──────────┬──┬─mm─┬──────────┬──)──┘
                          └─*──┘  └─-──┬─mm─┬─┘  └─*──┘
                                       └─*──┘

►──┬──────────────────────────────┬──────────────────────────────────►◄
   └┤ Modification keywords ├────┘
```

Modification keywords:

```
├──┬──────────────────┬──┬──────────────────┬──┬──────────────────────┬──┬──────────────────┬──►
   └─,CLass=class─────┘  └─,CReator=creator─┘  └─,DISP=──┬─DELETE─┬──┘  └─,Hold=──┬──────┬──┘
                                                         ├─HOLD───┤                 ├─No───┤
                                                         └─KEEP───┘                 └─Yes──┘

►──┬──────────────────────┬──┬──────────────────────────────────┬──┬──────────────────────┬──►
   └─,JOBname=jobname─────┘  └─,LIMit=──┬─low──────────────┬──┘  └─,NOTify=──┬─No─┬──┘
                                        └─(─low──┬──────┬─)─┘                 └─Yes┘
                                                 └─,high┘

►──┬──────────────────────────────────┬──┬──────────────────────────────────────────┬──►
   └─,RANGE=──┬─low──────────────┬──┘  └─,Routecde=──┬─routecde─────────────────┬──┘
              └─(─low──┬──────┬─)─┘                 └─(──────▼──┬──────────┬─)─┘
                       └─,high┘                                 └─routecde─┘

►──┬──────────────────────────────────────────┬──┬──────────────────────────────────────────┬──►
   └─,SYSaff=──┬─sysaff───────────────────┬──┘  └─,Volume=──┬─volume───────────────────┬──┘
               └─(──────▼──┬──────────┬─)─┘                 └─(──────▼──┬──────────┬─)─┘
                           └─(1)──────┘                                 └─volume───┘
                             └─sysaff─┘

►──┬──────────────────────────────┬──────────────────────────────────┤
   └─,WS=──┬─ws───────────────┬──┘
           └─(──────▼──┬─ws─┬─)─┘
```

Selection limiting keywords:

```
├──┬──────────────────────────────────┬──┬──────────────────────────────────┬──┬──────────────────────────────────┬──►
   └─,──/──CLass──┬─=──┬──class──────┘  └─,──/──DISP──┬─=──┬──┬─DELETE─┬──┘  └─,──/──Hold──┬─=──┬──┬─────┬──┘
                  ├─^=─┤                              └─^=─┘  ├─HOLD───┤                    └─^=─┘  ├─No───┤
                  ├─>──┤                                      └─KEEP───┘                            └─Yes──┘
                  └─<──┘
```

```
►──┬──────────────────────────────────────────────────────────────────────────────────────────────────────────────────►
   │ ,──/──JOBname──┬─=──┬─jobname─┬   │ ,──/──NOTify──┬─=──┬─┬─No──┬─┬
   │                │ ^= │         │   │               │ ^= │ │ Yes │ │
   │                │ >  │         │   │               │    │ │     │ │
   │                │ <  │         │   │               │    │ │     │ │
   │                │    │         │   │               │    │ │     │ │

►──┬──────────────────────────────────────────────────────────────────────────────────────────────────────────────────┤
   │ ,──/──SCHenv──┬─=──┬─schenv─┬   │ ,──/──SRVclass──┬─=──┬─srvclass─┬
   │               │ ^= │        │   │                 │ ^= │          │
   │               │ >  │        │   │                 │ >  │          │
   │               │ <  │        │   │                 │ <  │          │
```

Notes:

1 *sysaff* can be coded up to 32 times

Parameters

(nn|mm|*)
The subscript defining the offload job transmitter(s) that are affected by this command. The subscript can specify a numeric value (1-8) or a range of values associating offload job transmitters with offload devices. For information about specifying a range for this subscript, see “Syntax Conventions” at the front of this chapter.

CLass=class
The job class(es) (A-Z, and 0-9) specified for this device. These classes are to be considered during job selection if CLass is specified in the work selection (WS) list. You may specify up to 15 classes. If job class is not a criterion for job selection, you may specify a null parameter of (CLass=).

CReator=creator
Specifies the 1 through 8 character userid that creates the SYSOUT data sets to be processed. You can also specify wildcards on this parameter. See “Using Wildcards” on page 93 for additional information.

j
An alphabetic character (A-Z) or any of the special characters ($, #, or @).

cccccccc
Any combination of EBCDIC characters except a comma, a right parenthesis, or an equal sign.

DISP={DELETE|HOLD|KEEP}
The disposition of all jobs that are selected for dumping to the offload data set.

DELETE
The jobs are purged after being dumped.

HOLD
The jobs are held after being dumped. These jobs are eligible for processing by another offload job transmitter that can select held jobs.

KEEP
The jobs retain their current status after being dumped. These jobs are eligible for processing by another offload job transmitter.

Hold=[No|Yes]
The Hold specification for this device.

No
Only non-held jobs are to be selected.

Yes
Only held jobs are to be selected.

If both held and non-held jobs are to be selected, specify a null parameter of (Hold=).

JOBname=jobname
A 1 to 8 character jobname that is considered as a work selection criterion, if JOBname is also specified in the WS= list. You can also specify wildcards on this parameter. See “Using Wildcards” on page 93 for additional information.

If the jobname is not a criterion for job selection, you may specify a null parameter of (JOBname=).

LIMit={low, high}
Specifies the limits (in records) set by this device for the amount of input records in a job. This range is considered as a work selection criterion if LIMit is also specified in the WS= list.

For both variables *m* and *n*, you can specify a range of values from 0 through 2147483647. *m* and *n* can be equal. If they are not equal, *n* must be larger than *m*.

If you code only *m*, that value becomes both the lower and upper limit. If * is specified, the upper limit is the default value 4294967295.

NOTify={No|Yes}
Specifies whether or not a notification message is sent to the TSO userid specified on the JOB statement or /*NOTIFY JECL statement. If you specify Y, a notification message is sent when a pre-execution job is dumped to the offload data set. If you specify N, no notification message is sent.

SCHenv=schenv
Specifies the 1 to 16 alphanumeric, special ($, #, or @), or wildcard character (or combination of them) scheduling environment. Only those jobs with this SCHENV will be selected.

SRVclass=srvclass
Specifies the 1 to 8 alphanumeric, special ($, #, or @), or wildcard character (or a combination of them) service class name. Only those jobs with this service class will be selected.

RANGE=low [-high]
The range of jobs that are to be selected by this device (1-65534). If you code this parameter, you can specify one or two values:

- If you specify one value, that value becomes both the low and the high end of the range.
- If you specify two values, the first value is the low end of the range and the second value the high end. The two values can be equal. If they are not equal, the second value must be larger than the first value.

Routecde=routecde
Specifies the execution node selection criteria for jobs to be transmitted. Use commas to separate individual route codes and enclose the list in parentheses if more than one route code is specified. You may specify up to four route codes. If you allow this parameter to default, JES2 can select all jobs, regardless of execution node, for transmission.

Note: NODENAME=REQUIRED on the DESTDEF initialization statement will cause JES2 to require that a userid be prefixed with a node name.

You can specify any of the following values for node:

LOCAL|ANYLOCAL
Indicates that only jobs routed to the local node for execution can be selected.

destid
Indicates that only jobs routed to the specified location through an alias for the name of a node can be selected for execution.

Nnnnn|nodename
Indicates that only jobs routed to the specified location through the decimal node identifier from 1 to 32767 or the EBCDIC nodename can be selected for execution.

If route code is not a criterion for job selection, you may specify a null parameter of (Routecde=()). You must specify the empty parentheses.

SYSaff=sysaff
The affinity selection criteria, if SYSaff is also specified in the WS= list.

memname
A specific member name. Jobs that have affinity for the specified member can be selected. You may specify up to 32 member names. Multiple member names must be separated by commas and the list must be enclosed in parentheses.

ANY
Jobs that have affinity for any member in the JES2 complex can be selected.

If affinity is not a criterion for job selection, you may specify a null parameter of (SYSaff=()). You must specify the empty parentheses.

Volume=volume
The volume serial (5-6 characters) of a volume containing a spool data set. If Volume is also specified in the WS= list, only those jobs that reside on one or more of the specified volume(s) can be selected for dumping. You may specify up to 4 volumes. Multiple entries must be separated by commas and the list must be enclosed in parentheses.

If volume is not a criterion for job selection, specify a null parameter of (Volume=()) and do not specify Volume in the WS= list. You must specify the empty parentheses ().

WS=ws
Specifies the work selection criteria for the device. Using any combination of user and JES2-defined criteria, you can specify up to 19 criteria in the WS= list. Multiple entries must be separated by commas and the list must always be enclosed in parentheses (even if only one criterion is specified). If a criterion is specified in the list, work selection is based on the current setting of the corresponding parameter. If a criterion is not specified in the list, the criterion is not considered during work selection.

The general rules for specifying an offload job transmitter work selection list are:

1. You can use one slash (/) before or after one of the criterion to further specify work selection. Criteria placed before the slash must be matched exactly if the work is to be selected. Criteria placed after the slash do not have to matched exactly except in the following cases:
   Class
   Routecde
   SYSaff

Volume

Table 53 on page 733 describes the effect of each criterion when placed before and after the slash.

2. Class, Routecde, SYSaff, and Volume can be specified as multiple values on the offload job transmitter initialization statement. Placing these criteria before the slash in the WS= list, indicates a left to right priority order of multiple values, if multiple values have been specified. Placing these criteria after the slash indicates no priority order of multiple values, but a match is still required.
3. The order of those criteria specified after the slash indicates the priority (highest to lowest, in left to right order) in which JES2 attempts to match them.
4. Specifying a minus sign (-) before a criterion causes that criterion to be removed from the list.

   Note: An invalid operand message ($HASP003) is issued if an error is found in the WS operand, that is, if you try to remove a criterion that is not there. For example: If you enter $toff1.jt,ws=(-jobname) and jobname is not in the current work selection list for off1.jt, you get the $HASP003 message.
5. Specifying a criterion that is not currently specified in the list adds it to the end of the list either before or after the slash, depending on the placement of the slash in the command. If the slash is omitted from the command, JES2 assumes that the slash is at the end of the command.
6. Specifying a criterion currently in the list causes that criterion to be moved to the end of the list, thereby decreasing its priority. To correct a WS list that was erroneously changed by an incorrect operator command, remove any criterion that should not be in the list (specify a minus sign (-) before the criterion). If necessary, re-order the remaining criterion.
7. In general, the smaller the work selection list the less the placement of certain criteria within the list affects the work selection.

Authority Required

This command requires **system** authority. The description of the $T RDRnn command explains how to ensure the proper MVS system command group authority is assigned.

This command requires **control** security access authority. For a description of assigning command input authority, see *z/OS JES2 Initialization and Tuning Guide*.

Processing Considerations

- If you specify a null value for a characteristic that is currently specified in the work selection (WS=) list, for example, CLass=(), you must remove that criterion from the WS= list. If you do not remove the criterion from the WS= list, this device does not select any jobs.
- If you are uncertain of the characteristics in effect, enter the $D or $D U command for the particular offload job transmitter.

Scope

Single Member. The values supplied for this command will be in effect for this member only.

Depending on your installation's setup, however, you might want this command to be applied to all members of the MAS (to ensure a consistent environment across the MAS). If so, you can use the MVS ROUTE *ALL command to issue this command to all active members (if the JES2 command character is the same on all members). See *z/OS MVS System Commands* for more information on using the ROUTE *ALL command.

Messages

The $HASP884 message displays the current settings of all the parameters on the OFF.JT initialization statement.

Examples

1

```
$t off1.jt,disp=keep,ws=(/range)

$HASP884 OFF1.JT
$HASP884 OFF1.JT STATUS=STARTABLE,CLASS=A,CREATOR=,
$HASP884 DISP=KEEP,HOLD=YES,JOBNAME=,LIMIT=(0,*),
$HASP884 NOTIFY=NO,RANGE=(J1,65534),ROUTECDE=(),
$HASP884 START=YES,SCHENV=,SRVCLASS=,SYSAFF=(),
$HASP884 VOLUME=(,,,),WS=(CL,H/RANGE)
```

Offload transmitter 1 selects only held jobs whose execution class is A. Because the RANGE criterion is placed after the slash in the work selection (WS=) list, it is preferred but not necessary that the job numbers of these jobs be within the job range (RANGE=) specification of this transmitter. When the transmitter dumps these jobs to the offload data set, they are to retain their current status.

2

```
$t off(*).jt,hold=,ws=(-hold)

$HASP884 OFF8.JT
$HASP884 OFF8.JT STATUS=STARTABLE,CLASS=B,CREATOR=,
$HASP884 DISP=HOLD,HOLD=,JOBNAME=,LIMIT=(0,*),
$HASP884 NOTIFY=NO,RANGE=(J1,65534),ROUTECDE=(),
$HASP884 START=YES,SCHENV=,SRVCLASS=,SYSAFF=(),
$HASP884 VOLUME=(,,,),WS=(CL/)
```

JES2 removes the hold specification from the work selection criteria of all defined offload job transmitters. Both held and non-held jobs are eligible for selection by any offload job transmitter.

Table 53. Offload Job Transmitter Work Selection Criteria

CRITERION	BEFORE SLASH (/)	AFTER SLASH (/)
CLass	The class of the job must match one of the job classes specified for this device. Otherwise, the job is not considered selectable. If there are multiple classes, the list is in left to right priority sequence.	The class of the job must match one of the job classes specified for this device. Otherwise, the job is not deemed selectable. If there are multiple classes, the list is not in priority sequence.
CReator	The CReator specification of the job must match the CReator specification of this device.	It is not required that the CReator specification of the job match the CReator specification of this device.
Hold	The hold specification of the job must match the hold specification of this device.	It is not required that the hold specification of the job match the hold specification of this device.
JOBname	The jobname of the job must match the jobname (JOBname=) specified for this device.	It is not required the jobname of the job match the jobname (JOBname=) specified for this device.

Table 53. Offload Job Transmitter Work Selection Criteria (continued)

CRITERION	BEFORE SLASH (/)	AFTER SLASH (/)
LIMIT	Specifies that jobs selected must have the number of records (JCL and SYSIN records) specified on the LIMIT= parameter for this device.	Specifies that the number of records for a job (JCL and SYSIN records) will not prevent a job to be selected. However, jobs with the number of records specified on LIMIT= are prefered over jobs not within the specification on LIMIT=.
Priority	The priority of the job is to be considered. Whether specified before or after the slash, higher priority jobs are preferred. Placement of 'P' in the WS list gives priority importance in the work selection process. There is no matching done for priority.	Same as before slash.
RANGE	The job number of the job must be within the job range (RANGE=) specified for this device.	It is not required that the job number of the job be within the job range (RANGE=) specified for this device.
Routecde	The destination of the job must match the route code (Routecde=) specified for this device, otherwise the job is not considered selectable. If there are multiple route codes specified, the list is in left to right priority sequence.	The destination of the job must match the route code (Routecde=) specified for this device, but if there are multiple route codes specified the list is not considered to be in priority sequence.
SCHenv	The SCHenv specification of the job must match the SCHenv specification of this device.	It is not required that the SCHenv specification of the job match the SCHenv specification of this device.
SRVclass	The SRVclass specification of the job must match the SRVclass specification of this device.	It is not required that the SRVclass specification of the job match the SRVclass specification of this device.
SYSaff	The affinity of the job must match the affinity (SYSaff=) specification of this device.	It is not required that the affinity of the job match the affinity (SYSaff=) specification of this device.
Volume	The volume used by the job must match one of the volume specifications of this device, otherwise the job is not considered selectable. If multiple volumes are specified the list is in left to right priority sequence.	The volume used by the job must match one of the volume specifications of this device, but if multiple volumes are specified the list is not in priority sequence.

$T OFF(n).SR - Set Offload SYSOUT Receiver Characteristics

Function

To specify the work selection and processing characteristics of the indicated offload SYSOUT receiver(s).

One or more parameters on this command accepts wildcards. Parameter descriptions will note that.

Syntax

```
►►──$T──OFF──┬─n──┬──────────┬──┬──────────────────────────────────┬──.SR──┬──────────────────────────────┬──►
             │    └─-──┬─mm─┬─┘  │                                  │       └┤ Selection limiting keywords ├┘
             │         └─*──┘    │                                  │
             │                   │   ┌──────────────────────────┐   │
             └─(──┬─n─┬──┬──────┬─┴─┴─┬──────────┬──┬──────────┬─┴─)─┘
                  └─*─┘  └─-──┬─mm─┬─┘  │          │  │          │
                              └─*──┘    │          │  │          │
                                        │          │  │          │
                                        │          │  │          │
►──┬──────────────────────────────────────────────────────────────────────────────────────────────────────────►◄
   └┤ Modification keywords ├┘
```

Modification keywords:

```
├──┬──────────────────┬──┬──────────────────┬──┬──────────────────┬──┬──────────────────────────────────┬──►
   └─,Burst=──┬──────┬─┘  └─,CReator=creator─┘  └─,──┬─C───┬──=fcb─┘  └─,──┬─FLash──┬──=flash─┘
              ├─No───┤                             └─FCB─┘          └─O────┘
              └─Yes──┘

►──┬──────────────────────────────────────────┬──┬──────────────────┬──┬──────────────────┬──────────────────►
   └─,Forms=──┬─form──────────────────────┬─┘  └─,Hold=──┬──────┬─┘  └─,JOBname=jobname─┘
              │                           │              ├─No───┤
              │   ┌──────────────────┐    │              └─Yes──┘
              │   ┌─────────────────┐│    │
              │   │                 │└────┘
              └─(─┴──┬─form─┬──┬────┬─┴─)─┘
                     │      │  │    │
                     │      │  │    │
                     │      │  │    │
                     │      │  │    │
►──┬──────────────────────────────────────────────────────────────────────────────────────────────────────────►
   │                 ┌──────────────────────────┐
   │                 ┌─────────────────────────┐│
   │                 │                         │└────┐
   └─,MOD=(──┬─Burst=──┬──────┬──┬──────────────┬─┴─)─┘  └─,NOTify=──┬─No──┬─┘
             │         ├─No───┤  │              │                    └─Yes─┘
             │         └─Yes──┘  │              │
             ├─FCB=fcb───────────┤              │
             ├─FLash──┬──────┬──┤              │
             │        └─O────┘  │              │
             ├─Forms=forms───────┤              │
             ├─Hold=──┬──────┬──┤              │
             │        ├─No───┤  │              │
             │        └─Yes──┘  │              │
             ├─OUTDisp=──┬─H────┬──┤              │
             │           ├─HOLD─┤  │              │
             │           ├─K────┤  │              │
             │           ├─KEEP─┤  │              │
             │           ├─L────┤  │              │
             │           ├─LEAVE┤  │              │
             │           ├─W────┤  │              │
             │           └─WRITE┘  │              │
             ├─PRMode=prmode─────┤              │
             ├─Queue=queue───────┤              │
             ├─Routecde=routecde─┤              │
             ├─T──┬────┬──=ucs───┤              │
             │    └─UCS┘         │              │
             └─Writer=writer─────┘              │
```

```
►──┬──────────────────────────────────────────────────────────────────────────────┬──┤
   └─,OUTDisp=──┬─┬─H──────────────────────────────────────────────────────────┬─┬─┘
                │ ├─HOLD─────────────────────────────────────────────────────┤ │
                │ ├─K────────────────────────────────────────────────────────┤ │
                │ ├─KEEP─────────────────────────────────────────────────────┤ │
                │ ├─L────────────────────────────────────────────────────────┤ │
                │ ├─LEAVE────────────────────────────────────────────────────┤ │
                │ ├─W────────────────────────────────────────────────────────┤ │
                │ └─WRITE────────────────────────────────────────────────────┘ │
                │   ┌──────────────────────────────────────────────────────┐   │
                │   │ ┌─,──────────────────────────────────────────────┐   │   │
                │   │ │ (2)                                            │   │   │
                │   │ ▼                                                │   │   │
                └─(─┴─┬─H──────────────────────────────────────────────┬─┴─)─┘
                      ├─HOLD───────────────────────────────────────────┤
                      ├─K──────────────────────────────────────────────┤
                      ├─KEEP───────────────────────────────────────────┤
                      ├─L──────────────────────────────────────────────┤
                      ├─LEAVE──────────────────────────────────────────┤
                      ├─W──────────────────────────────────────────────┤
                      └─WRITE──────────────────────────────────────────┘
```

Notes:

1 *form* can be coded up to 8 times

2 OUTDisp can be coded up to 4 times

```
┤──┬──────────────────────────────────────────────────────────────────────────────┬──┬──────────────────────────────────────────────────────────────────────────────┬──┬──────────────────────────────────────────────────────────────────────────────►
   └─,PRMode=──┬─prmode──────────────────────────────────────────────────────┬─┬─┘   └─,Queue=queue─┘   └─,RANGE=──┬─low──────────────────────────────────────────────┬─┬─┘
               │ ┌─,──────────────────────────────────────────────────┐   │ │                                  └─(─low──┬──────────────┬─)─┘ │
               │ │ (1)                                                │   │ │                                           └─,high────┘              │
               └─(─┴─┬─prmode──────────────────────────────────────────┬─┴─)─┘                                                                  │
                     └──────────────────────────────────────────────────┘                                                                        │
►──┬──────────────────────────────────────────────────────────────────────────────┬──┬──────────────────────────────────────────────────────────────────────────────┬──┬──────────────────────────────────────────────────────────────────────────────►
   └─,Routecde=──┬─routecde────────────────────────────────────────────────┬─┬─┘   └─,──┬─T────┬─=ucs─┘   └─,Writer=writer─┘
                 │ ┌─,──────────────────────────────────────────────────┐   │ │         └─UCS──┘
                 │ │                                                    │   │ │
                 └─(─┴─┬──────────────────────────────────────────────┬─┴─)─┘
                       └─routecde─────────────────────────────────────┘
►──┬──────────────────────────────────────────────────────────────────────────────┬──┤
   └─,WS=──┬─ws──────────────────────────────────────────────────────────┬─┬─┘
           │ ┌─,──────────────────────────────────────────────────────┐   │
           │ │                                                        │   │
           └─(─┴─┬─ws──────────────────────────────────────────────────┬─┴─)─┘
                 └──────────────────────────────────────────────────────┘
```

Selection limiting keywords:

```
┤──┬──────────────────────────────────────────────────────────────────────────────┬──┬──────────────────────────────────────────────────────────────────────────────►
   └─,──/──Burst──┬─=──┬──┬─No──┬─┬─┘   └─,──┬─/──C────┬──┬─=──┬─fcb─┘
                  └─¬=─┘  └─Yes─┘ │         └─/──FCB────┘  ├─¬=─┤
                                  │                        ├─>──┤
                                  │                        └─<──┘
►──┬──────────────────────────────────────────────────────────────────────────────┬──┬──────────────────────────────────────────────────────────────────────────────►
   └─,──┬─/──FLash──┬──┬─=──┬─flash─┬─┬─┘   └─,──/──Forms──┬─=──┬──┬─form──────────────────────────────┬─┬─┘
        └─/──O──────┘  ├─¬=─┤       │ │                    └─¬=─┘  │ ┌─,──────────────────────────────┐ │ │
                       ├─>──┤       │ │                            │ │ (2)                            │ │ │
                       └─<──┘       │ │                            └─(─┴─form──────────────────────┴─)─┘ │
►──┬──────────────────────────────────────────────────────────────────────────────┬──┬──────────────────────────────────────────────────────────────────────────────►
   └─,──/──Hold──┬─=──┬──┬─No──┬─┬─┘   └─,──/──JOBname──┬─=──┬─jobname─┬─┬─┘
                 └─¬=─┘  └─Yes─┘ │                       ├─¬=─┤         │ │
                                 │                       ├─>──┤         │ │
                                 │                       └─<──┘         │ │
```

```
►──┬──────────────
```

Parameters

(n)
The subscript defining the offload SYSOUT receiver(s) that are affected by this command. The subscript can specify a numeric value (1-8) or a range of values associating offload SYSOUT receivers with offload devices. For information about specifying a range for this subscript, see “Syntax Conventions” at the front of this chapter.

Burst=[No|Yes]
The burst specification for this device.

No
Only output that is not to be bursted can be selected, if Burst is also specified in the WS= list.

Yes
Only output that is to be bursted (page-separated) can be selected, if Burst is also specified in the WS= list.

If the burst specification is not a criterion for output selection, specify a null parameter of (Burst=) and do not specify Burst in the WS= list.

CReator=creator
Specifies the 1 through 8 character userid that creates the SYSOUT data sets to be processed. You can also specify wildcards on this parameter. See “Using Wildcards” on page 93 for additional information.

j An alphabetic character (A-Z) or any of the special characters ($, #, or @).

ccccccc
Any combination of EBCDIC characters except a comma, a right parenthesis, or an equal sign.

FCB|C=fcb
The 1 to 4 alphanumeric or special character ($ # @) character identifier of a particular forms control buffer image or carriage control tape. If FCB is also specified in the WS= list, only those output data sets with this FCB specification can be selected. If the FCB characteristic is not a criterion for output selection, specify a null parameter of (FCB=) and do not specify FCB in the WS= list.

FLash|O=flash
The 1 to 4 alphanumeric or special character ($ # @) character flash name for this device. If FLash is also specified in the WS= list, only those output data sets with this flash name can be selected. If the FLash characteristic is not a criterion for output selection, specify a null parameter of (FLash=) and do not specify FLash in the WS= list.

Forms=form
The 1 to 8 alphanumeric or special character ($ # @) character forms name for this device. If Forms is also specified in the WS= list, only those output data sets with this forms name can be selected. You can also specify wildcards on this parameter. See “Using Wildcards” on page 93 for additional information. You may specify up to 8 forms.

If the Forms characteristic is not a criterion for output selection, specify a null parameter of (Forms=) and do not specify Forms in the WS= list.

Hold=[No|Yes]
The Hold specification for this device.

Y Only held post-execution jobs can be selected, if Hold is also specified in the WS= list.

N Only non-held post-execution jobs can be selected, if Hold is also specified in the WS= list.

If both held and non-held jobs are to be loaded, specify a null parameter of (Hold=) and do not specify Hold in the WS= list.

JOBname=jobname
A 1 to 8 character jobname. If JOBname is also specified in the WS= list, only those post-execution jobs with this jobname can be selected. You can also specify wildcards on this parameter. See “Using Wildcards” on page 93 for additional information.

If jobname is not a criterion for job selection, specify a null parameter of (JOBname=) and do not specify JOBname in the WS= list.

MOD=
Specifies modifications to the indicated characteristics of post-execution jobs and output data sets that are selected for reloading. These modifications are assigned during the reload process. If more than one of the following parameters is specified, each must be separated by commas and the list must be enclosed in parentheses.

Burst=[No|Yes]
Specifies whether (Y) or not (N) reloaded output is to be burst (page-separated). A null parameter of (Burst=) specifies that the Burst specification is not to be modified.

FCB=fcb
A 1 to 4 character identifier of the forms control buffer image or carriage control tape assigned to output when reloaded. A null parameter of (FCB=) specifies that the FCB specification is not to be modified.

FLash|O=flash
The 1 to 4 character flash name assigned to output when reloaded. A null parameter of (FLash=) specifies that the Flash specification is not to be modified.

Forms=forms
The 1 to 8 character forms name assigned to output when reloaded. A null parameter of (Forms=) specifies that the Forms specification is not to be modified.

Hold=[No|Yes]
Specifies whether post-execution jobs are to be held (Y) or released (N) once reloaded. A null parameter of (Hold=) specifies that the Hold specification is not to be modified.

NOTify={No|Yes}
Specifies whether a notification message is sent to the TSO userid specified on the JOB statement or /*NOTIFY JECL statement. If you specify Y, a notification message is sent when a post-execution job is reloaded from the offload data set. If you specify N, no notification message is sent.

OUTDisp=[H|HOLD|K|KEEP| L|LEAVE|W|WRITE]
The disposition of the output selected by this offload SYSOUT receiver is changed to the disposition that you specify on the OUTDISP operand.

PRMode=prmode
The 1 to 8 alphanumeric character processing mode assigned to output

when reloaded. You can also specify wildcards on this parameter. See "Using Wildcards" on page 93 for additional information. A null parameter of (PRMode=) specifies that the PRMode specification is not to be modified.

Queue=queue
The SYSOUT class (A-Z, 0-9) assigned to output when reloaded. A null parameter of (Queue=) specifies that the output class is not to be modified.

Routecde=routecde
Specifies a destination for a piece of output. When used as a subparameter of MOD=, Routecde= specifies the destination(s) for output you have selected. The value for all routing numbers can range from 1 to 32767. You can also specify wildcards on this parameter. See "Using Wildcards" on page 93 for additional information. For specification requirements, see "Route Codes" on page 92.

Note: NODENAME=REQUIRED on the DESTDEF initialization statement will cause JES2 to require that a userid be prefixed with a node name.

LOCAL|ANYLOCAL
Indicates that jobs are to be run at the local node.

destid Indicates that jobs are to be run at the specified node(s). You can specify this location by an alias for the name of a node. If destid is specified alone, it refers to both the node and the remote.

Nnnnn|nodename
Indicates that jobs are to be run at the specified node(s). You can specify a node using the decimal node identifier or an EBCDIC nodename.

NnnnnRmmmm|node.remote|node.userid
Indicates routing to the remote Rmmmm at the node Nnnnn. Rmmmm can also be specified as RMmmmm or RMTmmmm.

Ummmm
Indicates special local routing.

node.destid
Indicates a destination at the specified node. The destid refers to both the node and the remote. The node specified in the destid must be the same as the node portion of the route code. If the number of the remote is reassigned, you can use the destid to send to this node.

remote
Indicates routing to a remote. Remote can be specified in any of the following ways:

LOCAL|ANYLOCAL
Indicates that jobs are to be run at the local node.

Rmmmm
Indicates routing to the specified remote. Rmmmm can also be specified as RMmmmm or RMTmmmm. The value specified for mmmm can range from 1 to 32767.

destid Indicates routing to a destid referring to a remote.

userid Indicates routing to a valid TSO userid, or a user* (where * means all local, remote, special local unit, and userid output at the specified node).

node.*
Indicates that the nodename is to be modified to the specified node name, but the remote node will remain the same.

T|UCS=ucs
A 1 to 4 character identifier of the print train or character arrangement assigned to output when reloaded. A null parameter of (UCS=) specifies that the UCS specification is not to be modified.

Writer=writer
A 1 to 8 character external writer name assigned to output when reloaded. A null parameter of Writer= specifies that the writer name is not to be modified.

Authority Required

This command requires **system** authority. The description of the $T RDRnn command explains how to ensure the proper MVS system command group authority is assigned.

This command requires **control** security access authority. For a description of assigning command input authority, see *z/OS JES2 Initialization and Tuning Guide*.

Processing Considerations

- If you specify a null value for a characteristic that is currently specified in the work selection (WS=) list, for example,Burst=(), you must remove that criterion from the WS= list. If you do not remove the criterion from the WS= list, this device does not select any output.
- If you are uncertain of the characteristics in effect, enter the $D or $D U command for the particular offload SYSOUT receiver.

Scope

Single Member. The values supplied for this command will be in effect for this member only.

Depending on your installation's setup, however, you might want this command to be applied to all members of the MAS (to ensure a consistent environment across the MAS). If so, you can use the MVS ROUTE *ALL command to issue this command to all active members (if the JES2 command character is the same on all members). See *z/OS MVS System Commands* for more information on using the ROUTE *ALL command.

Messages

The $HASP885 message displays the current settings of all the parameters on the OFF(n).SR initialization statement.

Example

```
1  $t off1.sr,outdisp=(leave,keep),prmode=page,
           ws=(prmode/

HASP885 OFF1.SR STATUS=STARTABLE,OUTDISP=(LEAVE,KEEP),HOLD=,JOBNAME=,
                NOTIFY=NO,MOD=(BURST=,OUTDISP=,FCB=,FLASH=,
```

```
FORMS=,HOLD=,PRMODE=,QUEUE=,ROUTECDE=,
UCS=,WRITER=),NOTIFY=NO,RANGE=(J1,32767),
ROUTECDE=(),START=YES,WS=(Q,OUTD,PRM/),BURST=,
FCB=,FLASH=,FORMS=,PRMODE=(PAGE),QUEUE=,
UCS=,WRITER=
```

Offload SYSOUT receiver 1 selects only held output with a processing mode specification of PAGE.

$T OFF(n).ST - Set Offload SYSOUT Transmitter Characteristics

Function

To specify the work selection and processing characteristics of the indicated offload SYSOUT transmitter(s).

One or more parameters on this command accepts wildcards. Parameter descriptions will note that.

Syntax

```
►►─$T─OFF─┬─n─┬──────────┬──────────────────────────────────────────────┬─.ST─┬──────────────────────────────────┬──►
          │   └─-─┬─mm─┬─┘                                              │     └┤ Selection limiting keywords ├┘
          │       └─*──┘                                                │
          │   ┌──────────────────────────────────────────────────┐     │
          └─(─▼─n─┬─┬──────────┬─┬─┬──────────┬─┬─)─┘
                  │ └─*──┘     │ │ └─-─┬─mm─┬─┘ │
                  │            │ │     └─*──┘   │
                  │            │ │              │
                  │            │ │              │
                  │            │ │              
```

```
►──┬──────────────────────────────────────────────────────────────────────┤
   └,RANGE=──┬─low──────────────────┬──
             └(-low──────────────)──┘
                   └,high──┘
```

Notes:

1 *form* can be coded up to 8 times

2 OUTDisp can be coded up to 4 times

3 *prmode* can be coded up to 8 times

Parameters

(n)
The subscript defining the offload SYSOUT transmitter(s) that are affected by this command. The subscript can specify a numeric value (1-8) or a range of values associating offload SYSOUT transmitters with offload devices. For information about specifying a range for this subscript, see “Syntax Conventions” at the front of this chapter.

Burst=[No|Yes]
The burst specification for this device that is considered as a work selection criterion, if Burst is also specified in the WS= list.

Y Output that is to be bursted (page-separated) should be selected.
N Output that is not to be bursted should be selected.

If the burst specification is not a criterion for output selection, specify a null parameter of (Burst=) and do not specify Burst in the WS= list.

CReator=creator
Specifies the 1 through 8 character userid that creates the SYSOUT data sets to be processed. You can also specify wildcards on this parameter. See “Using Wildcards” on page 93 for additional information.

j An alphabetic character (A-Z) or any of the special characters ($, #, or @).

ccccccc
Any combination of EBCDIC characters except a comma, a right parenthesis, or an equal sign.

DISP={DELETE|HOLD|KEEP}
The disposition of all output that is selected for dumping to the offload data set.

DELETE
The output groups are purged after being dumped. A job is purged only if no more held or non-held output remains.

HOLD
Selected held output remains held after being dumped and is eligible for processing by another spool offload SYSOUT transmitter. Selected non-held output is marked non-selectable after being dumped and is not eligible for processing by another offload SYSOUT transmitter until their status is changed. You can change their status with the $TO command.

KEEP
The output groups retain their current status after being dumped. These output groups are eligible for processing by another spool offload SYSOUT transmitter.

FCB|C=fcb
The 1 to 4 alphanumeric or special ($ # @) character identifier of a particular forms control buffer image or carriage control tape. This characteristic is considered as a work selection criterion, if FCB is also specified in the WS= list. If the FCB characteristic is not a criterion for output selection, specify a null parameter of (FCB=) and do not specify FCB in the WS= list.

FLash|O=flash
The 1 to 4 alphanumeric or special ($ # @) character flash name for this device that is considered as a work selection criterion if FLash is also specified in the WS= list. If the FLash characteristic is not a criterion for output selection, specify a null parameter of (FLash=) and do not specify FLash in the WS= list.

Forms=form
The 1 to 8 alphanumeric or special ($ # @) character forms name for this device that is considered as a work selection criterion if Forms is also specified in the WS= list. You can also specify wildcards on this parameter. See “Using Wildcards” on page 93 for additional information. You may specify up to 8 forms.

If the Forms characteristic is not a criterion for output selection, specify a null parameter of (Forms=) and do not specify Forms in the WS= list.

Hold=[No|Yes]
The Hold specification for this device that is considered as a work selection criterion if Hold is also specified in the WS= list.

No
Only non-held post-execution jobs are to be selected.

Yes
Only held post-execution jobs are to be selected.

If both held and non-held jobs are to be selected, specify a null parameter of (Hold=) and do not specify Hold in the WS= list.

JOBname=jobname
A 1 to 8 character jobname that is considered as a work selection criterion, if JOBname is also specified in the WS= list. You can also specify wildcards on this parameter. See “Using Wildcards” on page 93 for additional information.

If the jobname is not a criterion for job selection, specify a null parameter of (JOBname=) and do not specify JOBname in the WS= list.

LIMit={low, high}
Specifies the limits (in records) set by this device for amount of output generated per output group. This range is considered as a work selection criterion if LIMit is also specified in the WS= list.

For both variables *m* and *n*, you can specify a range of values from 0 through 2147483647. *m* and *n* can be equal. If they are not equal, *n* must be larger than *m*.

If you code only *m*, that value becomes both the lower and upper limit. If * is specified, the upper limit is the default value 4294967295.

NOTify={No|Yes}
Specifies whether a notification message is sent to the TSO userid specified on the JOB statement or /*NOTIFY JECL statement. If you specify ‘Y’, a notification message is sent when all or part of a post-execution job is dumped to the offload data set. If you specify ‘N’, no notification message is sent.

OUTDisp={H|HOLD|K|KEEP|L|LEAVE| W|WRITE}
Specifies the disposition(s) that the output must have in order to be eligible for

processing by this offload transmitter. The operator can specify one to four of the following valid dispositions: Hold, Keep, Leave, or Write.

PLIM={low, high}
Specifies the limits (in pages) set by this device for amount of output generated per output group. This range is considered as a work selection criterion if PLIM is also specified in the WS= list.

For both variables *m* and *n*, you can specify a range of values from 0 through 2147483647. *m* and *n* can be equal. If they are not equal, *n* must be larger than *m*.

If you code only *m*, that value becomes both the lower and upper limit. If * is specified, the upper limit is the default value 4294967295.

PRMode=(vvvvvvvv,vvvvvvvv,...)
Specifies the 1 to 8 alphanumeric character processing mode(s) to select for output. You can specify up to four process modes. You can also specify wildcards on this parameter. See “Using Wildcards” on page 93 for additional information.

If all processing modes are selectable, specify a null parameter of PRMODE=(). You must specify the empty parentheses.

Queue=queue
The only SYSOUT class(es) (A-Z, 0-9) that this device selects, if Queue is also specified in the WS= list. You may specify up to 15 classes. If the SYSOUT class is not a criterion for output selection, specify a null parameter of (Queue=) and do not specify Queue in the WS= list.

RANGE={Jnnnnn|Snnnnn|Tnnnnn} [-nnnnn]
The batch job (J), started task (S), or time sharing user (T) range specified for this device (1-65534). This range is considered as a work selection criterion if the RANGE parameter is also specified in the WS= list. If you code this parameter, you can specify one or two values:

- If you specify one value, that value becomes both the low and the high end of the range.
- If you specify two values, the first value is the low end of the range and the second value the high end. The two values can be equal. If they are not equal, the second value must be larger than the first value.

Routecde=routecde
Specifies the one to four destination selection criteria for which output can be selected. If more than one route code is specified, enclose the list in parentheses. The value for all routing numbers can range from 1 to 32767. You can also specify wildcards on this parameter. See “Using Wildcards” on page 93 for additional information. For specification requirements, see “Route Codes” on page 92.

Note: NODENAME=REQUIRED on the DESTDEF initialization statement will cause JES2 to require that a userid be prefixed with a node name.

LOCAL|ANYLOCAL
Indicates that jobs are to be run at the local node.

destid Indicates that jobs are to be run at the specified node(s). You can specify this location by an alias for the name of a node. If destid is specified alone, it refers to both the node and the remote.

Nnnnn|nodename
Indicates that jobs are to be run at the specified node(s). You can specify a node using the decimal node identifier or an EBCDIC nodename.

NnnnnRmmmm|node.remote|node.userid
Indicates routing to the remote Rmmmm at the node Nnnnn. Rmmmm can also be specified as RMmmmm or RMTmmmm.

Ummmm
Indicates special local routing.

node.destid
Indicates a destination at the specified node. The destid refers to both the node and the remote. The node specified in the destid must be the same as the node portion of the route code. If the number of the remote is reassigned, you can use the destid to send to this node.

remote
Indicates routing to a remote. Remote can be specified in any of the following ways:

LOCAL|ANYLOCAL
Indicates that jobs are to be run at the local node.

Rmmmm
Indicates routing to the specified remote. Rmmmm can also be specified as RMmmmm or RMTmmmm.

destid Indicates routing to a destid referring to a remote.

userid Indicates routing to a valid TSO userid, or a user* (where * means all local, remote, special local unit, and userid output at the specified node).

node.*
Indicates that the nodename is to be modified to the specified node name, but the remote node will remain the same.

If the route code is not a criterion for output selection, specify a null parameter of (Routecde=()) and do not specify Routecde in the WS= list. You must specify the empty parentheses.

T|UCS=ucs
The 1 to 4 character print train specification of this device. This print train is considered as a work selection criterion if UCS is also specified in the WS= list. If the UCS specification is not a criterion for output selection, specify a null parameter of (UCS=) and do not specify UCS in the WS= list.

Volume=volume
The volume serial (5-6 characters) of a volume containing a spool data set. If Volume is also specified in the WS= list, only the output of those jobs that reside on one or more of the specified volume(s) are selected by this device. You may specify up to 4 volumes. Multiple entries must be separated by commas and the list must be enclosed in parentheses.

If volume is not a criterion for output selection, specify a null parameter of (Volume=()) and do not specify Volume in the WS= list. You must specify the empty parentheses ().

Writer=writer

The 1 to 8 alphanumeric or special ($ # @) character writer name for this device. You can also specify wildcards on this parameter. See “Using Wildcards” on page 93 for additional information. A null parameter of Writer= specifies that this device has no writer name. If Writer is specified in the WS= list, only those data sets with matching writer name specifications can be selected.

WS=ws

Specifies the work selection criteria for this device. Using any combination of user and JES2-defined criteria, you can specify up to 19 criteria in the WS= list. Multiple entries must be separated by commas and the list must always be enclosed in parentheses (even if only one criterion is specified). If a criterion is specified in the list, work selection is based on the current setting of the corresponding parameter. If a criterion is not specified in the list, the criterion is not considered during work selection.

The general rules for specifying an offload SYSOUT transmitter work selection list are:

1. You can use one slash (/) before or after one of the criterion to further specify work selection. Criteria placed before the slash must be matched exactly if the work is to be selected. Criteria placed after the slash do not have to matched exactly except in the following cases:
   PRMode
   Queue
   Routecde
   Volume

   Table 54 on page 750, describes the effect of each criterion when placed before and after the slash.
2. PRMode, Queue, Routecde, and Volume can be specified as multiple values on the offload SYSOUT transmitter initialization statement. Placing these criteria before the slash in the WS= list, indicates a left to right priority order of multiple values, if multiple values have been specified. Placing these criteria after the slash indicates no priority order of multiple values, but a match is still required.
3. The order of those criteria specified after the slash indicates the priority (highest to lowest, in left to right order) in which JES2 attempts to match them.
4. Specifying a minus sign (-) before a criterion causes that criterion to be removed from the list.

   Note: An invalid operand message ($HASP003) is issued if an error is found in the WS operand, that is, if you try to remove a criterion that is not there. For example: If you enter $toff1.st,ws=(-jobname) and jobname is not in the current work selection list for off1.st, you get the $HASP003 message.
5. Specifying a criterion that is not currently specified in the list adds it to the end of the list either before or after the slash, depending on the placement of the slash in the command. If the slash is omitted from the command, JES2 assumes that the slash is at the end of the command.
6. Specifying a criterion currently in the list causes that criterion to be moved to the end of the list, thereby decreasing its priority. To correct a WS list that was erroneously changed by an incorrect operator command, remove any

criterion that should not be in the list (specify a minus sign (-) before the criterion). If necessary, re-order the remaining criterion.

7. The LIMit subparameter has no effect as a work selection value for files received from a node that does not provide a page count for its files. For more information, refer to the sending node's reference documentation.
8. In general, the smaller the work selection list the less the placement of certain criteria within the list affects the work selection.
9. For both line and page mode devices, the LIM= and PLIM= values must be satisfied.

Authority Required

This command requires **system** authority. The description of the $T RDRnn command explains how to ensure the proper MVS system command group authority is assigned.

This command requires **control** security access authority. For a description of assigning command input authority, see *z/OS JES2 Initialization and Tuning Guide*.

Processing Considerations

- If you specify a null value for a characteristic, make sure that characteristic is not specified as an exact match criterion in the work selection list. If the characteristic is specified as an exact match criterion, this device does not select any output.
- If you are uncertain of the characteristics in effect, enter the $D or $D U command for the particular offload SYSOUT transmitter.

Scope

Single Member. The values supplied for this command will be in effect for this member only.

Depending on your installation's setup, however, you might want this command to be applied to all members of the MAS (to ensure a consistent environment across the MAS). If so, you can use the MVS ROUTE *ALL command to issue this command to all active members (if the JES2 command character is the same on all members). See *z/OS MVS System Commands* for more information on using the ROUTE *ALL command.

Messages

The $HASP886 message displays the current settings of all the parameters on the OFF(n).ST initialization statement.

Example

```
1 $t off1.st,outdisp=(write,keep),ws=(outdisp),queue=a

$HASP886 OFF1.ST STATUS=STARTABLE,DISP=DELETE,
                 OUTDISP=(WRITE,KEEP),HOLD=,JOBNAME=,
                 NOTIFY=YES,RANGE=(J1,32767),ROUTECDE=(),
                 START=YES,VOLUME=(,,,),WS=(Q,OUTD/),BURST=,
                 FCB=,FLASH=,FORMS=,LIMIT=(0,*),PLIM=(0,*),
                 PRMODE=(),QUEUE=A,UCS=,WRITER=
```

Offload SYSOUT transmitter 1 offloads ready output in class a.

Table 54. Offload SYSOUT Transmitter Work Selection Criteria

CRITERION	BEFORE SLASH (/)	AFTER SLASH (/)
Burst	The burst specification of the output group must match the burst (Burst=) specification of this device. Otherwise the output group is selected.	It is preferred but not necessary that the burst specification of the output group match the burst (Burst=) specification of this device.
CReator	The output group's CReator specification must match the CReator (CReator=) specification of this device. Otherwise, the output group is not selected.	It is not required that the creator specification of the output group match the creator (CReator=) specification of this device.
{FCB|C}	The output group's FCB image or carriage control tape must match the current FCB or carriage control tape of this device. Otherwise, the output group is not selected.	It is not required that the FCB or carriage control tape of the output group match the current FCB or carriage control tape of this device.
{FLash|O}	The output group's FLASH or forms overlay must match the current FLASH (FLash=) specification for this device. Otherwise, the output group is not selected.	It is not required the FLASH or forms overlay of the output group match the current FLASH (FLash=) specification for this device.
Forms	The output group's form specification must match the current forms (Forms=) specification for this device. Otherwise, the output group is not selected.	It is not required that the forms specification of the output group match the current forms (Forms=) specification for this device.
Hold	The hold specification of the job associated with the output group must match the hold specification of this device.	It is not required that the hold specification of the job associated with the output group match the hold specification of this device.
JOBname	The jobname of the output group must match the jobname specified (JOBname=) for this device.	It is not required that the job name of the output group match the job name (JOBname=) specified for this device. JES2 attempts to consecutively select all eligible output for a particular job.
LIMit	The amount of output generated by an output group must fall within the limits set for this device. Otherwise, the output group is not selected. For both line and page mode devices, JES2 checks the LIM= and PLIM= values. This subparameter has no effect as a work selection value for files received from a node that does not provide a page count for its files. For more information, refer to the sending node's reference documentation.	It is not required that the amount of output generated by the output group fall within the limits set for this device. This subparameter has no effect as a work selection value for files received from a node that does not provide a page count for its files. For more information, refer to the sending node's reference documentation.
OUTDisp	The output group's output disposition must match the output disposition specified (OUTDISP=) for this device.	It is not required that the output group's output disposition match the output disposition (OUTDISP=) specified for this device; however, JES2 attempts to match dispositions. Those that match have top priority.
Priority	The output group's priority is to be considered. Whether specified before or after the slash, higher priority output groups are preferred. Placement of 'P' in the WS list gives priority importance in the work selection process. There is no 'matching' done for priority.	Same as before slash.

Table 54. Offload SYSOUT Transmitter Work Selection Criteria (continued)

CRITERION	BEFORE SLASH (/)	AFTER SLASH (/)
{PRMode|PMD}	The process mode of the output group must match one of the process modes (PRMode=) specified for this device. Otherwise, the output group is not selected. If there are multiple PRModes, the list is considered to be in left to right priority sequence.	The output group's process mode must match the process mode (PRMode=) specified for this device, but if there are multiple PRModes, the list is not in priority sequence.
Queue	The output group's class must match one of the classes specified for this device. If multiple classes are specified, the list is in left to right priority sequence.	The class of the output group must match one of the classes specified for this device, but if multiple classes are specified, the list is not in priority order.
RANGE	The job number of the output group must be within the range (RANGE=) specified for this device.	It is not required that the job number specified for the output group be within the range (RANGE=) specified for this device.
Routecde	The destination of the output group must match the route code (Routecde=) specified for this device, otherwise the output group is not considered selectable. If there are multiple route codes specified for the device, the list is considered to be in left to right priority sequence.	The destination of the output group must match the route code (Routecde=) specified for this device, but if there are multiple route codes, the list is not considered to be in priority sequence.
{UCS|T}	The output group's universal character set must match the universal character set (UCS=) specified for this device. Otherwise, the output group is not selected.	It is preferred but not necessary that the universal character set of the output group match the universal character set specified for this device.
Volume	The volume used by the output group must match the volume (Volume=) specified for this device. If there are multiple volumes specified, the list is considered to be in left to right priority sequence.	The volume used by the output group must match the volume (Volume=) specified for this device, but if there are multiple volumes specified, the list is not in priority sequence.
Writer	The writer name specified for the output group must match the writer name specified (Writer=) for this device. Otherwise, the output group is not selected.	It is not required that the writer name of the output group match the writer name (Writer=) specified for this device.

$T OFFLOAD(n) - Set Offload Device Characteristics

Function

To specify the characteristics of the indicated logical offload device(s).

Syntax

```
►►──$T──OFFLOAD──┬─n──────────────────────────────────────────────────────────────►
                 │   └─-─┬─n─┬─┘                                                   │
                 │       └─*─┘                                                     │
                 │   ┌──────────────────────────────────────────────────┐          │
                 │   ▼                                                  │          │
                 └─(─┬─n─┬─┬──────────────────────────────────────────┬─┬─)─┘          │
                     └─*─┘ │ └─-─┬─n─┬─┘                              │ │             │
                           │     └─*─┘                                │ │             │
                           └──────────────────────────────────────────┘ │             │
                                                                        │             │
                                                                        └─┤ Selection limiting keywords ├─┘

►──┬──────────────────────────────────────────────────────────────────────────────►◄
   └─┤ Modification keywords ├─┘
```

Modification keywords:

```
├──┬──────────────────────┬──┬──────────────────┬──┬──────────────────────────────────┬──┬──────────────────────┬──┬──────────────────┬──►
   └─,ARCHIVE=─┬─ALL─┬─┘  └─,DSN=dsname─┘  └─,LABEL=─┬─AL──┬─┘  └─,PROTECT=─┬─No──┬─┘  └─,RETPD=nnnn─┘
               └─ONE─┘                              ├─AUL─┤                 └─Yes─┘
                                                    ├─BLP─┤
                                                    ├─NL──┤
                                                    ├─NSL─┤
                                                    ├─SL──┤
                                                    └─SUL─┘

►──┬──────────────────────────────────────────────────────────────────────────┬──┬──────────────────┬──┬──────────────────────┬──┬──────────────────┬──┤
   └─,UNIT=─┬─┬─devnum──────────────────────────────┬─┬─┬─┘  └─,TRACE=─┬─No──┬─┘  └─,VALIDATE=─┬─No──┬─┘  └─,VOLS=vols─┘
            │ │ │ │ │ │ │ │ │ │ │ │ │ │ │ │ │ │ │ │ │ │                └─Yes─┘                └─Yes─┘
            │ │ │ │ │ │ │ │ │ │ │ │ │ │ │ │ │ │ │ │ │ │
```

```
►──┬──────────────────────────────────────────────────────────────────────────────────────┬──┤
   └─,──/──VOLS──┬─=──┬──vols──┘
                 ├─^=─┤
                 ├─>──┤
                 └─<──┘
```

Parameters

(n)
The subscript defining the logical offload device(s) affected by this command. The subscript can specify a numeric value (1-8) or a range of values for offload devices defined by an OFFLOAD(n) initialization statement. For information about specifying a range for this subscript, see “Syntax Conventions” at the front of this chapter.

ARCHIVE={ALL|ONE}
Specifies whether to allow the offload device to select a job whose disposition is KEEP or HOLD.

If you specify ARCHIVE=ONE, that offload device will not reselect a job whose disposition is KEEP or HOLD; if you specify ARCHIVE=ALL, all offload devices are prevented from reselecting the job.

DSN=dsname
The 1 to 44 character offload data set and member name. The use of a generation data set (GDG) or a Partitioned Data Set (PDS) is not supported for this parameter.

LABEL = {AL|AUL|BLP|NL|NSL|SL|SUL}
The type of label processing required for the tape that is allocated for a non-cataloged spool offload data set. The valid types and their meanings are:

Type	Meaning
AL	American National Standard label
AUL	American National Standard label and American National Standard user-defined label
BLP	Bypass label processing
NL	No label
NSL	Non-standard label
SL	IBM standard label
SUL	IBM standard label and user-defined label

PROTECT={No|Yes}
Specifies whether (Y) or not (N) the spool offload data set requires System Authorization Facility (SAF) protection.

RETPD=nnnn
The period (0-9999), in days, for which this offload data set is retained.

UNIT=({devnum|/devnum|nnnn|cccccccc} [,nn])

devnum|/devnum
Specifies a 3-digit or 4-digit hexadecimal device number. A slash (/) must precede a 4-digit device number.

nnnn
Specifies a device type.

cccccccc
Specifies a one to eight character group name assigned to the device or group of devices that are to receive non-cataloged spool offload data sets.

nn Specifies a number, one to 59, that are allocated to mount the volumes containing the offload data set.

TRACE={No|Yes}
Specifies whether or not trace records are to be cut for data read or written by this offload device. See specific trace ids for more infomation.

VALIDATE={No|Yes}
Specifies whether or not JES2 should validate the logical record length of the first (header) record read from the offload data set.
- If YES is specified, JES2 will validate the logical record length of the first record.
- If NO is specified, JES2 will not validate the logical record length of the first record. Specifying NO allows the offload device to continue to read the offload dataset, even if the first record is not valid or missing.

VOLS=vols
Specifies the volume count (1-255) to be used for the offload data set.

Authority Required

This command requires **system** authority. The description of the $T RDRnn command explains how to ensure the proper MVS system command group authority is assigned.

This command requires **control** security access authority. For a description of assigning command input authority, see *z/OS JES2 Initialization and Tuning Guide*.

Processing Considerations

- This command is valid only if the indicated offload device is drained.
- If you are uncertain of the characteristics in effect, enter the $D or $D U command for the offload device in question.

Scope

Single Member. This command will be in effect for this member only. There is no need to have this command issued to all members of the MAS.

Messages

The $HASP882 message displays the current settings of all the parameters on the OFFLOAD(n) initialization statement.

Examples

1
```
$t offload1,dsn=off.dump1,label=sl,unit=/c045

$HASP882 OFFLOAD1  DSN=OFF.DUMP1,STATUS=DRAINED,ARCHIVE=ONE,
$HASP882           LABEL=SL,PROTECT=NO,RETPD=30,TRACE=NO,
$HASP882           UNIT=(/C045,1),VALIDATE=YES,VOLS=255
```

The offload data set for OFFLOAD1 is named OFF.DUMP1. The tape allocated for this data set requires IBM standard label (SL) processing.

2 `$t offload3,protect=yes,retpd=40`

```
$HASP882 OFFLOAD3  DSN=OFF.DUMP3,STATUS=DRAINED,ARCHIVE=ONE,
$HASP882           LABEL=SL,PROTECT=YES,RETPD=40,TRACE=NO,
$HASP882           UNIT=(,1),VALIDATE=YES,VOLS=255
```

The offload data set named OFF.DUMP3 requires SAF protection. JES retains this data set for 40 days.

$T OUTCLASS(n) - Set SYSOUT Class Characteristics

Function

To specify the default disposition of the SYSOUT data sets in the specified output class(es).

Syntax

```
►►──$T──OUTCLASS──┬─n─┬──────────────────────────────────────────────────►
                  │   └─-─┬─n─┬─┘                                          │
                  │       └─*─┘                                            │
                  │   ┌──────────────────────────────────┐                │
                  │   ▼                                  │                │
                  └─(─────n─┬─┬──────────────────────┬─┬─────────────────)─┘
                            └─*─┘ └─-─┬─n─┬─┘ │
                                      └─*─┘
```

```
►──┬──────────────────────────────────────────────────────────────────────┬──►◄
   └─,OUTDisp=──┬─H──────────────────────────────────────────────────────┬─┘
                │─HOLD──┬──────────────────────────────────────────────┬│
                │─K─────┤                                              │
                │─KEEP──┤                                              │
                │─L─────┤                                              │
                │─LEAVE─┤                                              │
                │─P─────┤                                              │
                │─PURGE─┤                                              │
                │─W─────┤                                              │
                └─WRITE─┘                                              │
                └─(──┬──────────────────────┬──┬──────────────────────┬─)─┘
                     └─H──────────────────┘  └─,─┬─H──────────────┬─┘
                       ├─HOLD──┬──────────┤     ├─HOLD──┬──────┤
                       ├─K─────┤          │     ├─K─────┤      │
                       ├─KEEP──┤          │     ├─KEEP──┤      │
                       ├─L─────┤          │     ├─L─────┤      │
                       ├─LEAVE─┤          │     ├─LEAVE─┤      │
                       ├─P─────┤          │     ├─P─────┤      │
                       ├─PURGE─┤          │     ├─PURGE─┤      │
                       ├─W─────┤          │     ├─W─────┤      │
                       └─WRITE─┘          │     └─WRITE─┘      │
```

Parameters

(n)
The subscript defining the output class(es) (A-Z, 0-9) that are affected. The subscript may specify a single class (for example B) or a range of classes. For information about specifying a range for this subscript, see “Syntax Conventions” at the front of this chapter.

OUTDisp
Specifies the default disposition of the SYSOUT data sets in the specified output class(es).

(normal)
Specifies the output disposition if the job ends successfully. Specify one of the output dispositions below.

(abnormal)
Specifies the output disposition if the job ends unsuccessfully. Specify one of the output dispositions below.

Note: A job is considered to have ended abnormally if:
1. The job abended,
2. The job has a JCL error

3. Completed unsuccessfully with a condition code (COND=...) specified on the JOB statement
4. The job fails during input processing
5. The job fails during conversion processing.

Valid output dispositions:

H|HOLD
Hold the output. JES2 does not process the output until you either change the disposition to WRITE or KEEP, or release the output. When the output is released, the disposition changes to WRITE.

K|KEEP
Process the output and then keep a copy of it on spool. After processing, the disposition of this output becomes LEAVE.

L|LEAVE
JES2 does not process the output until you change the disposition to WRITE or KEEP, or release the output. Once the output is released, the disposition changes to KEEP.

P|PURGE
Purge the output immediately.

W|WRITE
Process the output then purge it.

See *z/OS JES2 Initialization and Tuning Guide* for more information about specifying output disposition and how JES2 determines output disposition defaults.

Authority Required

This command requires **system** authority. The description of the $T RDRnn command explains how to ensure the proper MVS system command group authority is assigned.

This command requires **control** security access authority. For a description of assigning command input authority, see *z/OS JES2 Initialization and Tuning Guide*.

Scope

Single Member. This command will be in effect for this member only.

Depending on your installation's setup, however, you might want this command to be applied to all members of the MAS (to ensure a consistent environment across the MAS). If so, you can use the MVS ROUTE *ALL command to issue this command to all active members (if the JES2 command character is the same on all members). See *z/OS MVS System Commands* for more information on using the ROUTE *ALL command.

Messages

The $HASP842 message displays the current values of all the parameters on the OUTCLASS initialization statement.

Example

```
1  $t outclass(2),outdisp=(purge,write)

$HASP842 OUTCLASS(2),OUTPUT=PRINT,BLNKTRNC=YES,
                     OUTDISP=(PURGE,WRITE),TRKCELL=YES
```

$T OUTCLASS(n)

If a job, that has not yet entered output processing and has output in outclass(2), ends normally, JES2 purges its output in outclass(2). Otherwise the output is printed or punched normally.

$T OUTDEF - Set Job Output Characteristics

Function

To specify the job output characteristics of JES2.

Syntax

```
►►──$T──OUTDEF──┬──────────────────────────────┬──┬──────────────┬──┬──────────────────┬──┬──────────────────┬──►
                └─,BRODCAST=──┬──No──┬──┘  └─,COPIES=nnn──┘  └─,JOENUM=nnnnnn──┘  └─,JOEWARN=nnn──┘
                              └──Yes─┘

►──┬──────────────────────────────┬──┬──────────────────┬──┬──────────────────┬──┬──────────────────────────────►
   └─,OUTTIME=──┬──CREATE──┬──┘  └─,PRTYHIGH=nnn──┘  └─,PRTYLOW=nnn──┘  └─,PRTYOUT=──┬──No──┬──┘
                └──UPDATE──┘                                                          └──Yes─┘

►──┬──────────────────────┬──┬──────────────────┬──►◄
   └─,PRYORATE=nnnn──┘  └─,SEGLIM=nnnnn──┘
```

Parameters

BRODCAST={No|Yes}

Specifies whether or not shared broadcasting is used by this multi-access spool complex.

No

The SYS1.UADS and SYS1.BRODCAST data sets are not shared by all members of the multi-access spool complex. The $HASP165 notify message is always generated on the system on which the time-sharing user is logged on. If the user is not logged on, the $HASP165 notify message is added to the SYS1.BRODCAST data set associated with the job's originating system. **The output for the job is not available until the originating system issues the $HASP165 notify message**.

Yes

The two TSO data sets, SYS1.UADS (TSO user definition) and SYS1.BRODCAST (TSO message transmission definition), are shared by all members of the multi-access spool complex. The $HASP165 notify message is always generated at the system on which the time-sharing user is logged on. If the user is not logged on, the $HASP165 notify message is added to the SYS1.BRODCAST data set on any member for which the member has affinity.

Scope: MAS-Wide.

COPIES=nnn

The maximum number (1-255) of job output copies that may be requested in the accounting field of your JOB statement or on a /*JOBPARM control statement. If the number of copies requested is greater than the COPIES= value, JES2 automatically reduces the requested number to the COPIES= value.

Notes:

1. The specified COPIES= value does not affect those jobs that are already on the hardcopy queue.
2. Specifying this parameter does not affect requests for multiple copies of data sets made with a OUTPUT JCL statement or a /*OUTPUT control statement.

Scope: Single Member.

JOENUM=nnnnnn
Specifies the number (10-500000) of output elements (JOEs) to exist in the JES2 system. This number can be increased or decreased by operator command.

JOEWARN=nnn
The percentage (0-100) of job output elements used at which the $HASP050 message alerts the operator of a shortage of job output elements. JES2 deletes this message from the console when the resource shortage is relieved (either by a decrease in resource use or an increase in the threshold).

Notes:

1. If you specify 0, no alert is given.
2. The specified value is applied only to those jobs that have not yet been selected for execution.

Scope: MAS-Wide.

OUTTIME={CREATE|UPDATE}
Specifies whether JES2 maintains the timestamp marking the creation time of an output's JOE, or whether it saves the time the JOE was last modified.

CREATE
JES2 fills in the JOE time only when the job creates the output.

UPDATE
JES2 updates the JOE time whenever the JOE is modified.

Scope: Single Member.

PRTYHIGH=nnn
The upper priority limit (0-255) to be associated with the JES2 job output priority aging feature. JES2 does not priority-age a job output element if its priority is (or becomes) equal to or greater than the PRTYHIGH value. JES2 does not priority-age a job output element unless its initial priority is equal to or greater than the PRTYLOW value.

Notes:

1. If zero is specified, no priority aging is performed.
2. The PRTYRATE parameter on the OUTDEF statement specifies the number (0-1440) of time periods into which a 24-hour period is to be divided for use in increasing a job output element's priority by the JES2 priority aging feature. For example, if PRTYRATE=4 is specified, JES2 increases a job output element's priority by one for every 6 hours it remains in the system.

Scope: MAS-Wide.

PRTYLOW=nnn
The lower priority limit (0-255) to be associated with the JES2 job output priority aging feature. JES2 priority-ages a job output element only if its initial priority is equal to or greater than the value of PRTYLOW. JES2 does not priority-age a job output element above the PRTYHIGH value.

Note: The specified value is applied only to those jobs that have not yet been selected for execution.

Scope: MAS-Wide.

PRTYOUT={No|Yes}
Specifies whether the priority specification (PRTY=) on the JCL OUTPUT statement is to be supported (Y) or ignored (N).

Note: The specified value is applied only to those jobs that have not yet entered the system.

Scope: Single Member.

PRYORATE=nnnn
Specifies the number (0-1440) of time periods into which a 24-hour day is to be divided for use in increasing a job's output priority by the JES2 output priority-aging feature. For example, if 3 is specified, a job's output priority will be increased by one for every 8 hours it remains in the system. However, a job's output priority will not be increased unless it is at least equal to the value specified in the PRTYLOW parameter; nor will a job's output priority be increased above the value specified in the PRTYHIGH parameter. If 0 is specified, the values specified in the PRTYLOW and PRTYHIGH parameters are ignored.

Scope: MAS-Wide.

SEGLIM=nnnnn
Specifies the maximum number of output segments (1-99999) JES2 creates for a given SYSOUT data set. When the number of segments exceeds the value SEGLIM, JES2 no longer segments the SYSOUT. The SEGLIM parameter has a range from 1 to 99999. The extreme values produce the following results:

SEGLIM=1
Prohibits output segmentation

SEGLIM=99999
Allows practically unlimited output segmentation

Scope: Single Member.

Authority Required

This command requires **system** authority. The description of the $T RDRnn command explains how to ensure the proper MVS system command group authority is assigned.

This command requires **control** security access authority. For a description of assigning command input authority, see *z/OS JES2 Initialization and Tuning Guide*.

Processing Considerations

See the individual operand descriptions to determine the effect this command has on jobs in different phases of execution.

Scope

The scope of this command varies by parameter. See the description of each parameter for its scope.

The values supplied for some parameters on this command will be in effect across the entire MAS while the values supplied for other parameters will be in effect for this member only.

Depending on your installation's setup, you might want the parameters for this command to be applied to all members of the MAS (to ensure a consistent environment across the MAS). If so, you can use the MVS ROUTE *ALL command to issue this command to all active members (if the JES2 command character is the same on all members). See *z/OS MVS System Commands* for more information on using the ROUTE *ALL command.

Messages

The $HASP836 message displays the current values of all the parameters on the OUTDEF initialization statement.

Examples

1 `$t outdef,prtylow=10,prtyhigh=150`

```
$HASP836 OUTDEF BRODCAST=NO,COPIES=255,DMNDSET=NO,
                JOENUM=200,JOEFREE=200,JOEWARN=80,
                OUTTIME=CREATE,PRTYLOW=10,
                PRTYHIGH=150,PRTYOUT=NO,
                SEGLIM=100,
                STDFORM=STD,USERSET=NO
```

JES2 priority-ages those job output elements that have an initial priority of at least 10 and less than 150.

2 `$t outdef,brodcast=yes`

```
$HASP836 OUTDEF BRODCAST=YES,COPIES=255,DMNDSET=NO,
                JOENUM=200,JOEFREE=200,JOEWARN=80,
                OUTTIME=CREATE,PRTYLOW=10,
                PRTYHIGH=150,PRTYOUT=NO,
                SEGLIM=100,
                STDFORM=STD,USERSET=NO
```

When a TSO user is not currently logged on, this member issues the $HASP165 notify messages to the shared broadcast data set (SYS1.BRODCAST) on any member for which the message has affinity.

$T OUTPRTY(n) - Set Output Scheduling Priorities

Function

To specify the output scheduling priorities with relation to the quantity (records or pages) of output.

Syntax

```
►►──$T──OUTPRTY──┬─n──┬──────┬──┬──────────────────────────────┬──┬──────────────────────────────────►
                 │    └─-──mm─┘  │                              │  └─┤ Selection limiting keywords ├─┘
                 │               │   ┌──────────────────────┐   │
                 │               │   ▼                      │   │
                 └─(──────n──┬──────┬──┬──────┬──────────────)──┘
                             └─*────┘  └─-──mm─┘
                                          └─*────┘

►──┬──────────────────────────────────────────────────────────────────────────────────────────────►◄
   └─┤ Modification keywords ├─┘
```

Modification keywords:

```
├──┬──────────────────┬──┬──────────────────────┬──┬──────────────────────┬──────────────────────────┤
   └─,PAGE=page───────┘  └─,PRIORITY=priority───┘  └─,RECORD=record────────┘
```

Selection limiting keywords:

```
├──┬──────────────────────────────────────────┬──┬──────────────────────────────────────────┬──────────────────────────────────────────┤
   └─,──/──PAGE──┬──────┬──┬──────────┬──┬──────┘  └─,──/──RECORD──┬──────┬──┬──────────┬──┬──────┘
                 │      │  │          │  │                         │      │  │          │  │
                 ├─=────┤  ├─page─────┤  ├─^=───┤                 ├─=────┤  ├─record───┤  ├─^=───┤
                 ├─^=───┤  ├─^=───┤    ├─>───┤                    ├─^=───┤  ├─^=───┤    ├─>───┤
                 ├─>────┤  ├─>────┤    ├─<───┤                    ├─>────┤  ├─>────┤    ├─<───┤
                 └─<────┘  └─<────┘    └──────┘                    └─<────┘  └─<────┘    └──────┘
```

Parameters

n The entry (1-9) being referenced in the OUTPRTY table.

PAGE=page
The output page count for stream mode data sets (1-16777215) that is associated with the PRIORITY= value. The actual page count of a data set is determined by JES2 when writing the output data set to spool.

PRIORITY=priority
The output selection priority (0-255) of a job output element (JOE) for the output interval specified by the RECORD or PAGE parameter. When JES2 builds job output elements (JOEs) for a job, it assigns a priority to each JOE based on the total number of output lines, cards, or pages represented by the JOE.

Note: JOEs are selected in a high to low priority order. For example, a JOE with priority of 150 is selected before a JOE with priority of 140.

RECORD=record
The output record count (1-16777215) that is associated with the PRIORITY= value. The actual record count of a data set is determined by JES2 when writing the output data set to spool.

Authority Required

This command requires **system** authority. The description of the $T RDRnn command explains how to ensure the proper MVS system command group authority is assigned.

This command requires **control** security access authority. For a description of assigning command input authority, see *z/OS JES2 Initialization and Tuning Guide*.

Processing Considerations

- This command does not affect post-execution jobs.
- The OUTPRTY values do not affect an output data set if the PRTY= parameter was specified on the data set's JCL OUTPUT statement and PRTYOUT=YES was specified on the OUTDEF initialization statement.
- Before changing the specifications of OUTPRTY(n), make sure the values you want assigned fit into the defined OUTPRTY table. See *z/OS JES2 Initialization and Tuning Reference* for further information about the size of the OUTPRTY(n) table.

Scope

Single Member. This command will be in effect for this member only.

Depending on your installation's setup, however, you might want this command to be applied to all members of the MAS (to ensure a consistent environment across the MAS). If so, you can use the MVS ROUTE *ALL command to issue this command to all active members (if the JES2 command character is the same on all members). See *z/OS MVS System Commands* for more information on using the ROUTE *ALL command.

Messages

The $HASP848 message displays the current values of all the parameters on the OUTPRTY(n) initialization statement.

Example

```
1  $t outprty(8),page=300,record=15000,priority=120

$HASP848 OUTPRTY(8) PRIORITY=120,RECORD=15000,PAGE=300
```

JES2 assigns a priority of 120 to any data set that contains at least 15,000 output records and/or 300 output pages.

$T PCE - Trace All JES2 Processors of a Given Type

Function

To start or stop tracing for all JES2 processors of a given type, including non-device oriented JES2 processors.

Syntax

```
►►──$T──PCE──┬─'pce'──────────────────────────────────────────────────────────────►
             └─(──┬─pce──────────────────────────────────────────────────────────
                  │─'pce'──┬──────────────────────────────────────────────────────
                  └─*──────┘  ┬─-pce──────────────────────────────────────────────
                              │─-'pce'──────────────────────────────────────────────
                              └─-*────────────────────────────────────────────────
                              )──┬──────────────────────────────────────────────►
                                 └─┤ Selection limiting keywords ├─┘

►──┬──────────────────────────────────────────────────────────────────────────►◄
   └─┤ Modification keywords ├─┘
```

Modification keywords:

```
├──┬──────────────────────────────────────────────────────────────────────────┤
   └─,TRace=──┬─No──┬──┘
              ├─Yes─┤
              └─P───┘
```

Selection limiting keywords:

```
├──┬──────────────────────────────────────────────────────────────────────────►
   └─,──┬──────┬──ACTive──┬──────┬──active──┘  └─,──┬──────┬──Allocated──┬──────┬──allocated──┘
        └──/───┘          ├──=───┤                  └──/───┘             ├──=───┤
                          ├──¬=──┤                                      ├──¬=──┤
                          ├──>───┤                                      ├──>───┤
                          └──<───┘                                      └──<───┘

►──┬──────────────────────────────────────────────────────────────────────────►
   └─,──┬──────┬──Defined──┬──────┬──defined──┘  └─,──┬──────┬──Ended──┬──────┬──ended──┘  └─,──/──TRace──┬──────┬──┬─No──┬──┘
        └──/───┘           ├──=───┤                   └──/───┘         ├──=───┤                   ├──=───┤  └─Yes─┘
                           ├──¬=──┤                                   ├──¬=──┤
                           ├──>───┤                                   ├──>───┤
                           └──<───┘                                   └──<───┘
```

Parameters

pce

The processors for which tracing is activated or deactivated. The following processor-type values may be specified.

Command Input	Processor(s)
ALICE	Acquire lock and initiate cleanup executor
ASYNC	ASYNC I/O Processor
BERTLOCK	BERT Lock Post Processor
CKPT	Checkpoint Processor
CNVT	JCL Converter
COMM	Command Processor
ENF	ENF Listen Processor
EOM	End of memory processor
EVTL	Event Trace Log
EXEC	Execution Services
FCLEANUP	FSS Cleanup at EOM
HOPE	Output Processor
INTRDR	Internal Reader

JCMD	MAS Command Processor
MCON	Remote Console Processor
MISC	Miscellaneous processor
MLLM	Line Manager
NET.JR	NJE Job Receiver
NET.JT	NJE Job Transmitter
NET.SR	NJE SYSOUT Receiver
NET.ST	NJE SYSOUT Transmitter
NET.RR	Job Route Receiver
NET.RT	Job Route Transmitter
NPM	Network Path Manager
OFF.JR	Offload Job Receiver
OFF.JT	Offload Job Transmitter
OFF.SR	Offload SYSOUT Receiver
OFF.ST	Offload SYSOUT Transmitter
PRT	Printer
PRTYO	Output Priority Aging
PRTY	Job Priority Aging
PSO	Process SYSOUT Processor
PUN	Punch
PURGE	Purge Processor
RDR	Reader
RESOURCE	Resource Monitor
RESTART	ARM Support Processor
RMT.RDR	RJE Reader
RMT.PRT	RJE Printer
RMT.PUN	RJE Punch
SJFSERV	SWB Modify Processor
SNF	Spool Garbage Collector
SOM	Spool Offload I/O Mgr
SPI	SYSOUT API
SPIN	Spin Processor
SPOOL	Spool Command Manager
STAC	SSI Status/Cancel Services
TIME	Elapsed Time Monitor
TIMER	STIMER/TTIMER Processor
WARM	Warm Start Processor
XCF	JESXCF Interface
XCFCMND	JESXCF Request Processor

See ″PCE List″ in *z/OS JES2 Messages* for a list of PCEs and a description of their functions.

ACTive=active
The $ACTIVE count.

Allocated=allocated
Number of defined PCEs that have been created.

Defined=defined
Number of PCEs of this type defined to JES2.

Ended=ended
Number of allocated PCEs that have ABENDed and are now ended.

TRace={No|Yes}
Specifies whether tracing is to be activated or deactivated for these processors.

Yes
Tracing is activated if trace IDs 11 and 12 are currently enabled. This command causes tracing of program linkage ($SAVE and $RETURN macros) performed under control of the specified group of processors.

Notes:

1. Trace IDs 11 and 12 may be enabled either at initialization on the TRACE(n) statement or using the $S TRACE(n) command.
2. Not all processors that are eligible for tracing use the $SAVE and $RETURN macros (for example, the STIMER/TTIMER processor).

No
Tracing is disabled.

Authority Required

This command requires **system** authority. The description of the $T RDRnn command explains how to ensure the proper MVS system command group authority is assigned.

This command requires **control** security access authority. For a description of assigning command input authority, see *z/OS JES2 Initialization and Tuning Guide*.

Processing Considerations

For some device processors, tracing may have been set individually using other commands (for example, $TRDR1,TR=Y). This command sets tracing for **ALL** processors of the given type. Subsequent $T commands for individual devices can be issued to change the setting for just selected processors.

Scope

Single Member. This command will be in effect for this member only.

However, you might want this command to be applied to all members of the MAS (to ensure a consistent environment across the MAS). If so, you can use the MVS ROUTE *ALL command to issue this command to all active members (if the JES2 command character is the same on all members). See *z/OS MVS System Commands* for more information on using the ROUTE *ALL command.

Messages

The $HASP653 message displays the current processor tracing status and the PCE counts for the processor type specified.

Example

```
1  $t pce(evtl),trace=yes

  $HASP653 PCE(EVTL)     COUNT=(1,1,0),ACTIVE=0,TRACE=YES
```

JES2 activates tracing for the event trace log processors.

```
2 $TPCE(CKPT),TRACE=YES
$HASP653 PCE(CKPT)      COUNT=(1,1,0),ACTIVE=0,TRACE=YES
```

Activate tracing for checkpoint type PCEs.

```
3 $TPCE(NET*),TRACE=YES
$HASP653 PCE(NET.JT)    COUNT=(30,30,0),ACTIVE=0,TRACE=YES
$HASP653 PCE(NET.JR)    COUNT=(10,10,0),ACTIVE=0,TRACE=YES
$HASP653 PCE(NET.ST)    COUNT=(30,30,0),ACTIVE=0,TRACE=YES
```

```
$HASP653 PCE(NET.SR)    COUNT=(40,40,0),ACTIVE=0,TRACE=YES
$HASP653 PCE(NET.RR)    COUNT=(1,1,0),ACTIVE=0,TRACE=YES
$HASP653 PCE(NET.RT)    COUNT=(1,1,0),ACTIVE=0,TRACE=YES
```

Activate tracing for all PCE types that start with NET.

```
4 $TPCE(*),ACTIVE>0,TRACE=YES
$HASP653 PCE(PRT)       COUNT=(11,11,0),ACTIVE=1,TRACE=YES
```

Activate tracing for all PCE types that have an active count of 1 or more.

$T PRINTDEF - Control the JES2 Print Environment

Function

To specify the characteristics of the JES2 print environment.

Syntax

```
►►──$T──PRINTDEF──┬──────────────────┬──┬──────────────────┬──┬──────────────────────────────────────────────────────────┬──►◄
                  └─,LINECT=nnn──────┘  └─,NEWPAGE=──┬─ALL─┬┘  │                                                          │
                                                     └─1───┘   │                  ┌──────────────────────────────┐         │
                                                               └─,SEPPAGE=(──┬──┬──┴──LOCAL=──┬─DOUBLE─┬──┬──┬──
```

DOUBLE
Requests the production of two full separator pages including jobname and jobid in block letters. Having two separator pages guaranties an outward facing page. DOUBLE is the default for LOCAL printers.

FULL Indicates that a complete separator page including jobname and jobid is produced.

HALF Specifies a separator page containing only detail separator information. Jobname and jobid do not appear in block letters. HALF is the default for REMOTE printers.

NONE Inhibits separator page generation.

Authority Required

This command requires **system** authority. The description of the $T RDRnn command explains how to ensure the proper MVS system command group authority is assigned.

This command requires **control** security access authority. For a description of assigning command input authority, see *z/OS JES2 Initialization and Tuning Guide*.

Processing Considerations

This command affects only those jobs that have not yet printed.

Scope

Single Member. This command will be in effect for this member only.

Depending on your installation's setup, however, you might want this command to be applied to all members of the MAS (to ensure a consistent environment across the MAS). If so, you can use the MVS ROUTE *ALL command to issue this command to all active members (if the JES2 command character is the same on all members). See *z/OS MVS System Commands* for more information on using the ROUTE *ALL command.

Messages

The $HASP833 message displays the current values of all the parameters on the PRINTDEF initialization statement.

Example

1 `$t printdef,linect=80,seppage=(local=full,remote=half)`

```
$HASP833 PRINTDEF CCWNUM=49,LINECT=80,NIFCB=STD3,
                  NIFLASH=****,NIUCS=GT10,FCB=6,TRANS=NO,
                  UCS=0,DBLBUFR=YES,RDBLBUFR=NO,
                  SEPPAGE=(LOCAL=FULL,REMOTE=HALF)
```

$T PROCLIB(xxxxxxxx) - Modify an Existing Dynamic PROCLIB Concatenation

Function

The $T PROCLIB(xxxxxxxx) command modifies a existing dynamic PROCLIB concatenation. Using this command, new data sets can be added to a concatenation, or existing data sets updated or deleted from the concatenation. If a $T PROCLIB command is entered with no operands, then concatenation will be re-allocated. This is useful to retry a previous failed allocation or to pick up updates to an existing data set (for example, a data set cataloged on a new volume). This command only effects dynamic PROCLIB. PROCxx DDs in the JES2 start PROC cannot be altered nor deleted.

Syntax

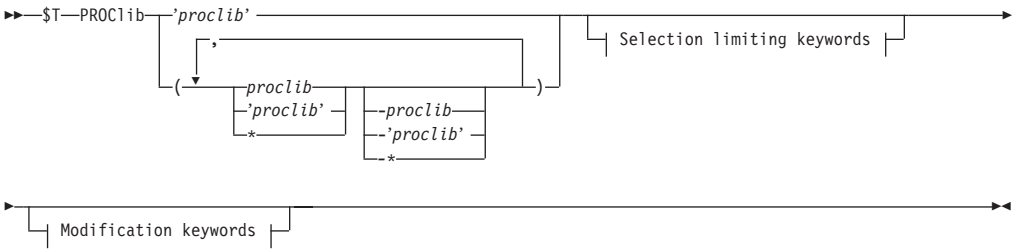

Modification keywords:

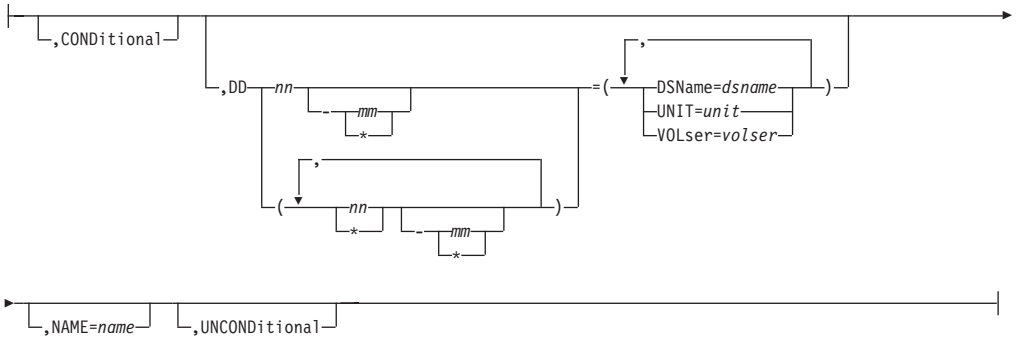

Selection limiting keywords:

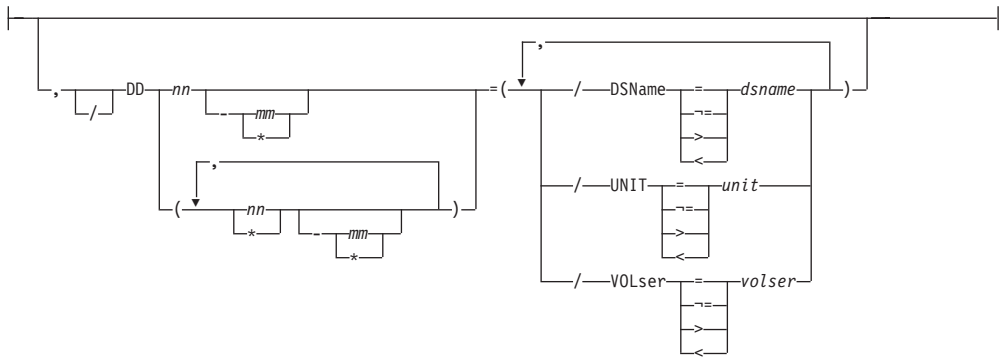

Parameters

(xxxxxxxx)
Specifies the 1-8 character PROCLIB DD name being modified. If a dynamic PROCLIB does not exist with this name, the command will fail. You can also specify wildcards on this parameter. See “Using Wildcards” on page 93 for additional information.

DD(nnn)=
Specifies up to 255 data sets that are part of the concatenated for this PROCLIB DD name. Existing data sets can be altered or removed as well as adding data sets to the concatenation. Data sets in this list are compacted after the $T command is processed. If you add a new DD(100) to an existing concatenation of 2 data sets, the resulting concatenation will have DD(1), DD(2) and DD(3). If you then set the data set name for DD(2) to null, it will be removed from the concatenation leaving just DD(1) and DD(2) where DD(2) has the old DD(3) data set specification. Though up to 255 data sets can be specified, MVS rules limit any data set concatenation to 255 extents. If any data set has more than one extent, then the total number of data sets that can be supported will be reduced.

DSName=jxxx,,,x
Specifies a 1-44 character data set name which JES2 will include in this PROCLIB concatenation. This must specify a partitioned data set (PDS). If this value is coded as null (no operand specified) then the DD(nnn) will be deleted from the concatenation.

UNIT=hhhh|/hhhh|nnnn|cccccccc
If the PROCLIB data set to be used is not cataloged, then the unit information for the device containing the data set must be specified in one of the following ways:

hhhh | /hhhh
specifies a 3 or 4 digit hexadecimal device number. Device numbers can be specified by any of the following formats:

- UNIT=hhh
- UNIT=/hhh
- UNIT=/hhhh

where hhh and hhhh represent the device numbers. A slash (/) must precede a 4 digit device number.

nnnn
Specifies a device name.

cccccccc
Specifies a 1 to 8 character group name assigned to the device or group of devices that contained the non-cataloged PROCLIB data set to be used.

VOLser=xxxxxx
If the PROCLIB data set to be used is not cataloged, then this specifies a 1 to 6 character volume serial number on which the data set resides.

UNCONDitional|CONDitional
Specifies what action should be taken if one of the data sets cannot be allocated. If CONDitional is specified then if any data set in the concatenation cannot be allocated (even ones that were not updated), the $T command is failed. If UNCONDitional is specified, then an error allocating a singe data set is ignored. The data set is not added to the concatenation but it remains assigned to the DD(nnn). When the concatenation is displayed, failed DD(nnn) will

display the text 'ALLOCATION FAILED' before the data set name. If all the data sets in a concatenation fail to allocate, then the $T command fails regardless of whether UNCONDitional was specified.

NAME=xxxxxxxx
Allows the name of an existing PROCLIB concatenation to be changed. Specifying PROC(TEST01) NAME=PROC01 will rename the TEST01 PROCLIB concatenation to PROC01. If there is an existing PROC01 concatenation, it is replaced by the current TEST01 concatenation. This is useful for testing new concatenations before putting them into production.

Authority Required

This command requires **system** authority. The description of the $T RDRnn command explains how to ensure the proper MVS system command group authority is assigned.

This command requires **control** security access authority. For a description of assigning command input authority, see *z/OS JES2 Initialization and Tuning Guide*.

Scope

Single Member. The values supplied for this command will be in effect for this member only.

You may want to use this command to get information about all members in the MAS. To do so, you can use the MVS ROUTE *ALL command to issue this command to all active members (if the JES2 command character is the same on all members). See *z/OS MVS System Commands* for more information on using the ROUTE *ALL command.

Messages

The HASP319 message displays the current PROCLIB concatenation.

The HASP003 RC=52 indicates that you are trying to modify a PROCLIB concatenation that does not exist.

The HASP003 RC=91 indicates that the command failed because there was an allocation failure. In this case, additional IKJ message will be issued to describe the allocation error.

Example

1
```
$tproclib(proc01),dd(3)=(dsn=tso.proclib,vol=j2shr2,unit=3380)
$HASP319 PROCLIB(PROC01)    DD(1)=(DSNAME=SYS1.PROCLIB),
$HASP319                    DD(2)=(DSNAME=TEST.PROCLIB),
$HASP319                    DD(3)=(DSNAME=TSO.PROCLIB,
$HASP319                    VOLSER=J2SHR2,UNIT=3380)
```

Add a new data set, TSO.PROCLIB to an existing concatenation

2
```
$tproclib(proc01),dd(2)=(dsn=)
$HASP319 PROCLIB(PROC01)    DD(1)=(DSNAME=SYS1.PROCLIB),
$HASP319                    DD(2)=(DSNAME=TSO.PROCLIB,
$HASP319                    VOLSER=J2SHR2,UNIT=3380)
```

Remove the TEST,PROCLIB from an existing concatenation

3

```
$tproclib(test01),name=proc01
$HASP319 PROCLIB(PROC01)
$HASP319 PROCLIB(PROC01)    DD(1)=(DSNAME=SYS1.PROCLIB),
$HASP319                    DD(2)=(DSNAME=TSO.PROCLIB,
$HASP319                    VOLSER=J2SHR2,UNIT=3380)
```

Rename the TEST01 concatenation PROC02

4

```
$tproclib(*),dd(*)=(/dsn=tso.proclib,dsn=test.proclib,unit=,vol=)
$HASP319 PROCLIB(PROC01)    DD(1)=(DSNAME=SYS1.PROCLIB),
$HASP319                    DD(2)=(DSNAME=TEST.PROCLIB)
$HASP319 PROCLIB(PROC02)    DD(1)=(DSNAME=SYS1.PROCLIB),
$HASP319                    DD(2)=(DSNAME=TEST.PROCLIB)
```

Change all PROCLIBs that have a data set name of TSO.PROCLIB to TEST.PROCLIB with no VOLSER= and no UNIT= specified

$T PRTnnnn and $T Rnnnn.PRm - Control a Printer

Function

- To specify printer work selection and processing characteristics
- To override a system request for a setup you are unable to fulfill.
- To start or stop tracing of the JES2 processor associated with the specified printer.

One or more parameters on this command accepts wildcards. Parameter descriptions will note that.

Syntax

```
►►─$T──┬─PRINTER─┬──┬─nn──┬──────┬──┬──────────────────────────────────────────────┬──┬─ Selection limiting keywords ─┬──►
       └─PRT─────┘  │     └─-─┬─mm─┬┘  │                                              │  └───────────────────────────────┘
                    │         └─*──┘    │  ┌──────────────────────────────────────┐    │
                    │                   │  ▼                                      ,    │
                    └─(─────────────────┴──┬─nn─┬──┬──────┬──────────────────────┴─)──┘
                                           └─*──┘  └─-─┬─mm─┬┘
                                                       └─*──┘

►──┬─ Modification keywords ─┬──►◄
   └─────────────────────────┘
```

Modification keywords:

```
├──┬──────────────────────────┬──┬──────────────────────────────────────────────────────────────────────────────┬──►
   └─,Burst=─┬─No──┬──┬─,─┬─CHAR─┬──┬─nn──┬──────┬──┬──────────────────────────────────────────────┬─=char─┬──┘
             └─Yes─┘  │   └─X────┘  │     └─-─┬─mm─┬┘  │                                              │       │
                      │             │         └─*──┘    │  ┌──────────────────────────────────────┐    │       │
                      │             │                   │  ▼                                      ,    │       │
                      │             └─(─────────────────┴──┬─nn─┬──┬──────┬──────────────────────┴─)──┘       │
                      │                                    └─*──┘  └─-─┬─mm─┬┘                              │
                      │                                                └─*──┘                                 │

►──┬──────────────────────────┬──┬──────────────────────────┬──┬──────────────────────────┬──┬──────────────────────────┬──►
   └─,CKPTLINE=ckptline───────┘  └─,CKPTMODE=─┬─PAGE─┬──────┘  └─,CKPTPAGE=ckptpage──────┘  └─,CKPTSEC=ckptsec──────┘
                                              └─SEC──┘

►──┬──────────────────────────────────────────────────────────────────────────────────────────────────────────────►
   └─,COPYMARK=─┬─CONSTANT─┬──┬──────────────────────────┬──┬──────────────────────────┬──┬──────────────────────────┬──►
                ├─DATASET──┤  └─,CReator=creator─────────┘  └─,DEVFCB=devfcb──────────┘  └─,DEVFLASH=devflash─────────┘
                ├─DEFAULT──┤
                ├─JOB──────┤
                └─NONE─────┘

►──┬──────────────────────────┬──┬──────────────────────────┬──┬──────────────────────────────────────────────────┬──►
   └─,─┬─C───┬─=fcb──────────┘  └─,─┬─FLASH─┬─=flash─────────┘  └─,Forms=─┬─form──────────────────────────────┬──┘
       └─FCB─┘                     └─O─────┘                              │  ┌──────────────────────────────┐  │
                                                                          │  ▼                              ,  │
                                                                          │  (1)                            │  │
                                                                          └─(──────────form──────────────────┴─)─┘

►──┬──────────────────────────────────────────────────────────────────────────────────────────────────────────────►
   └─,──/──FSATRACE─┬─=──┬─Yes─┬──┬──────────────────────┬──┬──────────────────────┬──┬──────────────────────────┬──►
                    └─^=─┘  └─No──┘  └─,FSS=fss────────────┘  └─,JOBname=jobname─────┘

►──┬──────────────────────────────────────────────────────────────────────────────────────────────────────────────►◄
   └─,LIMit=─┬─low──────────────────────┬──┬──────────────────────┬──┬──────────────┬──┬──────────────┬──┬──────────┬──┘
             └─(─low─┬──────────────┬─)──┘  └─,Mark=─┬─No──┬──┬─No──┬──┬─No──┬──┬─No──┬──┬─No──┬──┬─No──┬──┬─No──┬──┘
                     └─,high────────┘                └─Yes─┘  └─Yes─┘  └─Yes─┘  └─Yes─┘  └─Yes─┘  └─Yes─┘  └─Yes─┘
```

```
►─┬──────────────────────────────┬─┬──────────────────────────────┬──────────────────────────────────────────────────────────┤
  └─,MODE=──┬─FSS─┬──────────────┘ └─,──┬─MODIFY──┬──────────────┘
            └─JES─┘                     └─Y───────┘
```

Notes:

1 *form* can be coded up to 8 times

```
├─┬──────────────────────────────┬─┬──────────────────────────────┬─┬──────────────┬─┬──────────────────────────────┬──────►
  └─,──┬─MODIFY──┬──────────────┘ └─,NEWPAGE=──┬─ALL───────┬─┘ └─,NPRO=npro─┘ └─,Pause=──┬─────────┬─┘
       └─Y───────┘                              ├─DEFAULT─┤                              ├─No────┤
                                                └─1───────┘                              └─Yes───┘

►─┬──────────────────────────────┬─┬──────────────────────────────┬─┬──────────────────────────────────────────────┬──────►
  └─,PLIM=──┬─low──────────────┬─┘ └─,PRESELCT=──┬─No────┬─┘ └─,PRMode=──┬─prmode──────────────────────┬─┘
            └─(─low──────────┬─┘                 └─Yes───┘               └─(──┬──────────────────────┬──)─┘
                             └─,high─┘                                         │ ┌─,──────────────────┐ │
                                                                               │ ▼                    │ │
                                                                               │   (1)                │ │
                                                                               └───prmode─────────────┘

►─┬──────────────────────────────┬─┬──────────────────────────────┬─┬──────────────────────────────────────────────┬──────►
  └─,──┬─CLass───┬─=queue─┬─┘ └─,RANGE=──┬─low──────────────┬─┘ └─,Routecde=──┬─routecde────────────────────┬─┘
       └─Queue───┘        │               └─(─low──────────┬─┘                 └─(──┬──────────────────────┬──)─┘
                          │                               └─,high─┘                    │ ┌─,──────────────────┐ │
                          │                                                            │ ▼                    │ │
                          │                                                            │   routecde           │ │
                          │                                                            └───────────────────────┘

►─┬──────────────────────────────┬─┬──────────────────────────────┬─┬──────────────────────────────┬─┬──────────────┬──────►
  └─,Sep=──┬─────────┬─┘ └─,SEPCHARS=──┬─CURRENT─┬─┘ └─,SEPDS=──┬─────────┬─┘ └─,SETUP=──┬─HALT────┬─┘
           ├─No────┤                   └─DEFAULT─┘               ├─No────┤               ├─NOHALT─┤
           └─Yes───┘                                             └─Yes───┘               └─────────┘

►─┬──────────────────────────────┬─┬──────────────────────────────┬─┬──────────────────────────────┬─┬──────────────┬──────┤
  └─,──┬─K─────┬─=──────────────┬─┘ └─,TRace=──┬─No────┬─┘ └─,TRANS=──┬─DEFAULT─┬─┘ └─,TRKCELL=──┬─No────┬─┘
       └─SPACE─┘                │               ├─P─────┤               ├─No────────┤               └─Yes───┘
                                ├─DOUBLE─┤      └─Yes───┘               └─Yes───────┘
                                ├─R──────┤
                                ├─RESET──┤
                                ├─SINGLE─┤
                                ├─TRIPLE─┤
                                ├─1──────┤
                                ├─2──────┤
                                └─3──────┘

►─┬──────────────────────────────┬─┬──────────────────────────────┬─┬──────────────────────────────┬─┬──────────────────────────────┬──────►
  └─,──┬─T───┬─=ucs─┬─┘ └─,UCSVerfy=──┬─No────┬─┘ └─,UNIT=unit─┘ └─,Volume=──┬─volume──────────────────────┬─┘
       └─UCS─┘      │                  └─Yes───┘                   └─(──┬──────────────────────┬──)─┘
                    │                                                   │ ┌─,──────────────────┐ │
                    │                                                   │ ▼                    │ │
                    │                                                   │   volume             │ │
                    │                                                   └───────────────────────┘

►─┬──────────────────────────────┬─┬──────────────────────────────┬──────────────────────────────────────────────────────┤
  └─,Writer=writer─┘ └─,WS=──┬─ws──────────────────────────┬─┘
                             └─(──┬──────────────────────┬──)─┘
                                  │ ┌─,──────────────────┐ │
                                  │ ▼                    │ │
                                  │   ws                 │ │
                                  └───────────────────────┘
```

Notes:

1 *prmode* can be coded up to 8 times

Selection limiting keywords:

```
├─┬──────────────────────────────┬─┬──────────────────────────────┬──────►
  └─,──/──Burst──┬─=──┬──┬─No────┬─┘ └─,──/──CKPTMODE──┬─=──┬──┬─PAGE──┬─┘
                 └─^=─┘  └─Yes───┘                       └─^=─┘  └─SEC───┘
```

```
►──┬──────────────
```

```
►──┬──────────────────────────────────────────────────────────────────────────────────────────────────────────────────►
   │ ┌──────────────────────────────────────────────────────────────────────────────────────────────────────────────┐
   └─┼─,──/──SETUP──┬──────┬──HALT───┬──┬──────────────────────────────────────────────────────────────────────────┼
     │              │ =    │         │  │ ┌──────────────────────────────────────────────────────────────────────┐ │
     │              │ ^=   │ NOHALT  │  └─┼─,──┬──/──K─────┬──┬──────────────────────────────────────────────────┼ │
     │              └──────┴─────────┘    │  │ /──SPACE  │  │ =    ┌──────────────────────────────────────────┐ │ │
     │                                    │  └───────────┘  │ ^=   │ DOUBLE                                   │ │ │
     │                                    │                 │      │ R                                        │ │ │
     │                                    │                 │      │ RESET                                    │ │ │
     │                                    │                 │      │ SINGLE                                   │ │ │
     │                                    │                 │      │ TRIPLE                                   │ │ │
     │                                    │                 │      │ 1                                        │ │ │
     │                                    │                 │      │ 2                                        │ │ │
     │                                    │                 │      │ 3                                        │ │ │
     │                                    │                 │      └──────────────────────────────────────────┘ │ │
     │                                    │                 └────────────────────────────────────────────────────┘ │
     └────────────────────────────────────┴────────────────────────────────────────────────────────────────────────┘
►──┬──────────────────────────────────────────────────────────────────────────────────────────────────────────────────►
   │ ┌──────────────────────────────────────────────────────────────────────────────────────────────────────────────┐
   └─┼─,──/──TRace──┬──────┬──No─────┬──┬──────────────────────────────────────────────────────────────────────────┼
     │              │ =    │         │  │ ┌──────────────────────────────────────────────────────────────────────┐ │
     │              │ ^=   │ P       │  └─┼─,──/──TRANS──┬──────┬──DEFAULT──┬──┬──────────────────────────────────┼ │
     │              └──────┴─Yes─────┘    │            │ =    │           │  │ ┌──────────────────────────────────┐ │ │
     │                                    │            │ ^=   │ No        │  │ │                                  │ │ │
     │                                    │            └──────┴─Yes───────┘  │ │                                  │ │ │
     │                                    │                                 └─┴─────────────────────────────────┘ │ │
     └────────────────────────────────────┴────────────────────────────────────────────────────────────────────────┘
►──┬──────────────────────────────────────────────────────────────────────────────────────────────────────────────────►
   │ ┌──────────────────────────────────────────────────────────────────────────────────────────────────────────────┐
   └─┼─,──/──TRKCELL──┬──────┬──No─────┬──┬──────────────────────────────────────────────────────────────────────────┼
     │                │ =    │         │  │ ┌──────────────────────────────────────────────────────────────────────┐ │
     │                │ ^=   │ Yes     │  └─┼─,──┬──/──T─────┬──┬──────┬──ucs──┬──┬──────────────────────────────┼ │
     │                └──────┴─────────┘    │  │ /──UCS    │  │ =    │       │  │ ┌──────────────────────────────┐ │ │
     │                                    │  └───────────┘  │ ^=   │       │  │ │                              │ │ │
     │                                    │                 │ >    │       │  │ │                              │ │ │
     │                                    │                 │ <    │       │  │ │                              │ │ │
     │                                    │                 └──────┴───────┘  │ │                              │ │ │
     └────────────────────────────────────┴────────────────────────────────────┴─┴──────────────────────────────┴─┴──┤
►──┬──────────────────────────────────────────────────────────────────────────────────────────────────────────────────►
   │ ┌──────────────────────────────────────────────────────────────────────────────────────────────────────────────┐
   └─┼─,──/──UCSVerfy──┬──────┬──No─────┬──┬──────────────────────────────────────────────────────────────────────────┼
     │                 │ =    │         │  │ ┌──────────────────────────────────────────────────────────────────────┐ │
     │                 │ ^=   │ Yes     │  └─┼─,──/──UNIT──┬──────┬──unit──┬──┬──────────────────────────────────┼ │
     └─────────────────┴──────┴─────────┘    │            │ =    │        │  │ ┌──────────────────────────────────┐ │ │
     │                                    │            │ ^=   │        │  │ │                                  │ │ │
     │                                    │            │ >    │        │  │ │                                  │ │ │
     │                                    │            │ <    │        │  │ │                                  │ │ │
     │                                    │            └──────┴────────┘  │ │                                  │ │ │
     │                                    │                               └─┼─,──/──Writer──┬──────┬──writer──┬──┼ │
     │                                    │                                 │            │ =    │          │  │ │
     │                                    │                                 │            │ ^=   │          │  │ │
     │                                    │                                 │            │ >    │          │  │ │
     │                                    │                                 │            │ <    │          │  │ │
     │                                    │                                 │            └──────┴──────────┘  │ │
     └────────────────────────────────────┴────────────────────────────────────────────────────────────────────────┘
```

Notes:

1 *prmode* can be coded up to 8 times

Parameters

FSATRACE ={YES|NO}
Specifies whether the internal rolling trace for an FSS printer is activated or deactivated.

Note: The internal rolling trace for FSS printers is provided for diagnostic purposes only, and should not be used unless instructed by IBM service personnel.

PRinter
The local printer that is affected by this command.

Rnnnn.PRm
The remote printer that is affected by this command.

ASIS={Y|N}
Specifies whether JES2 will send the print data to the remote printer without suppressing extraneous ejects and adding an eject at the end of a data set. This parameter should be specified as NO if the installation wants to continue to suppress ejects and receive ejects at the end of each print data set.

Note: This keyword applies only to remote printers.

Burst=[No|Yes]
Specifies whether the printed output from the indicated 3800 printer is to be burst into separate sheets (Y) or is to be in continuous fanfold form (N).

C|FCB={xxxx|RESET}

xxxx
The identifier (1 to 4 alphameric or special character ($ # @)) of the carriage control tape for a printer without a forms control buffer (FCB) feature, or the FCB image for a printer having the FCB feature. If you

specify an FCB image, it must be available in SYS1.IMAGELIB. If loading is required for Rnnnn.PRm, it must be done by the operator at the JES2 RJE workstation, unless the workstation has FCB-loading capability.

RESET
Specifies that a 3800 printer or a printer running under the control of a functional subsystem (FSS mode) is to construct a 6 lines per inch FCB based on the forms loaded in the printer. For a 3800 (and other printers) in FSS mode, JES2 uses the FCB specified in the PROC that starts the FSS. RESET can be used to correct the problem indicated by the $HASP180 load error message.

Notes:

1. When you explicitly set the C= parameter for the 3800 printer, the specified value is used as the installation's default FCB image for SYSOUT data sets which do not specify the FCB= parameter through JCL.
2. If you have received the $HASP180 load error message indicating an FCB image error, specify the C= parameter to correct the problem.

CKPTLINE=ckptline
The maximum number of lines (range 0-32767) in a logical page. JES2 uses this value, with the CKPTPAGE value, to determine when to take output checkpoints. The size of a logical page is also defined as the number of lines printed until:

- A channel skip is encountered.
- The line count specified by the LINECT parameter on the PRINTDEF initialization statement, the /*JOBPARM control statement, the JCL OUTPUT statement, or the JOB statement accounting field has been exceeded.

If you specify CKPTLINE=0, a logical page is defined only by the items noted above. If the LINECT value specified is greater than zero, setting CKPTLINE to a value greater than LINECT results in the LINECT value being used as the definition of a logical page; it overrides CKPTLINE.

Note: This operand is ignored if specified for a printer under the control of a functional subsystem. The functional subsystem does its own physical and logical pages checkpoint based on the CKPTPAGE and CKPTSEC values passed to it from JES2.

CKPTMODE={PAGE|SEC}
Specifies whether the functional subsystem is to take checkpoints based on page count or elapsed time.

Note: This operand is valid for printers under the control of a functional subsystem only, not those under the control of JES2.

PAGE
The functional subsystem uses the checkpointing interval specified by the CKPTPAGE operand.

SEC
The functional subsystem uses the checkpointing interval specified by the CKPTSEC operand.

Note: The installation should set the values for CKPTSEC and CKPTPAGE so they are best for the printer; then control which checkpoint method to use, either SEC or PAGE, by changing the CKPTMODE parameter.

CKPTPAGE=ckptpage
The number (1-32767) of logical pages for non-page mode printers and physical pages for page-mode printers to be printed before each output checkpoint is taken. This parameter and CKPTLINE control the amount of checkpoint activity to spool.

Notes:

1. When you use the K=(1|2|3|R) operand for a data set that is printing on a 3800-3 printer operating in FSS mode, the forced spacing is reset either at the end of that data set, or when you issue a $T PRTnnnn,CKPTPAGE=nnnnn command while this data set is printing. If you issue the $T PRTnnnn,CKPTPAGE command and forced spacing is still desired, you must include the K=(1|2|3|R) operand.
2. The CKPTPAGE parameter should be set to a low value for slow printers and a high value for faster printers such as the 3800 to prevent the occurrence of excessive checkpoint cycles for faster devices.

CKPTSEC=ckptsec
The number (0-32767) of seconds to elapse before each output checkpoint is taken. This parameter is valid only for a printer under control of a functional subsystem.

CMPCT=[YES|NO]
For SNA RJE workstations only, specifies whether (YES) or not (NO) this remote printer has compaction capabilities. If it does and the corresponding RJE workstation definition (RMT(nnnn)) specifies COMPACT=YES, JES2 forces this remote printer to use compaction.

If you specify CMPCT=YES, JES2 forces compression of the data (COMPRESS=YES). If you specify CMPCT=NO, JES2 turns off compaction, even if it is specified on the RJE workstation definition.

Note that the CMPCT= parameter:
- Applies only to remote printers
- Can be changed only when the printer is inactive
- Must be specified as NO if CCTL=NO

COMPACT|Z=compact
Specifies the compaction table number or the 1 to 8 character compaction table name that must be defined through a COMPACT initialization statement.

Note: The COMPACT= parameter can be changed only when the printer is inactive.

COMPRESS=[No|Yes}
Specifies whether (YES) or not (NO) this remote printer has compression/expansion capabilities.

If you specify COMPRESS=YES and the corresponding RJE workstation and LINE(nnnn) initialization statements specify COMPRESS=YES, JES2 forces this remote SNA printer to use compression. If you specify COMPRESS=NO, JES2 turns off compression, even if the corresponding RJE workstation specifies COMPRESS=YES.

Note that the COMPRESS= parameter:
- Applies only to remote printers
- Can be changed only when the printer is inactive

For SNA RJE workstations only:
- Must be specified as NO if CCTL=NO

- Sets on the corresponding bit setting in the RJE BIND if COMPRESS=YES.

COPYMARK={CONSTANT|DATASET|DEFAULT|JOB}
Specifying DATASET or JOB causes copy marks (SYSOUT separation indicator markings) to be incremented on a data set level or on a JOE level, respectively. Copy marks are not incremented when you specify CONSTANT.

Note: The COPYMARK parameter applies to FSS-controlled devices only.

CReator=jcccccccc
Specifies the 1 through 8 character userid that creates the SYSOUT data sets to be processed. You can also specify wildcards on this parameter. See “Using Wildcards” on page 93 for additional information.

j
An alphabetic character (A-Z) or any of the special characters ($, #, or @).

ccccccc
Any combination of EBCDIC characters except a comma, a right parenthesis, or an equal sign.

DEVFCB=devfcb
Specifies the default FCB attribute JES2 uses when FCB= is not coded in the job’s JCL. (JES2 does not validate the existence of the FCB name in SYS1.IMAGELIB.) Specifying RESET sets the default FCB attribute to null.

Note: 3800 printers use the FCB specified on the PRT initialization statement.

DEVFLASH={xxxx|NONE}
Specifies the name of the device default forms FLASH ID.

xxxx
The identifier (1 to 4 alphameric or special ($ # @) characters) of the forms FLASH ID for the specified 3800 printer. This forms FLASH ID is used for jobs selected by this printer that do not have FLASH= explicitly coded in the job’s JCL.

NONE
The forms FLASH ID is unspecified (the value is set to asterisks).

Note: The printer **must** be drained before the DEVFLASH parameter can be used to modify the default forms FLASH ID.

FCBLOAD={YES|NO}
Specifies whether (YES) or not (NO) JES2 provides the forms control buffer (FCB) for this printer.

This parameter works only for SNA printers or a 3211 printer attached to a multileaving workstation with the text-transparency (TRANSPAR=YES on both the LINE(nnnn) and the RJE workstation definitions) feature.

For an SNA RJE workstation, the FCBLOAD= parameter uses only one stop for each channel, for a maximum of 12 stops.

Note that the FCBLOAD= parameter:
- Applies to remote printers only
- Can be changed only when the printer is inactive
- Is forced to NO if SETUP=PDIR on the corresponding RJE workstation.
- Is limited to the line length specified by the PRWIDTH= parameter minus 2 for this printer.

FLASH|O={xxxx|RESET|NONE}
Specifies the name of the active (current) forms FLASH ID.

xxxx
The identifier (1 to 4 alphameric or special ($ # @) characters) of the forms FLASH ID for the specified 3800 printer. This forms FLASH ID is used for jobs selected by this printer only when the job has explicitly coded the identical forms FLASH ID in the job's JCL, or if the FLASH ID is the same as the DEVFLASH ID on the DEVFLASH parameter.

RESET
The current forms FLASH ID is unspecified (the value is set to asterisks).

NONE
The current forms FLASH ID is unspecified (the value is set to asterisks).

Forms=form
The 1 to 8 alphanumeric or special ($ # @) character name of the forms that are loaded into this printer. You can also specify wildcards on this parameter. See "Using Wildcards" on page 93 for additional information.

Note: You can specify 1 through 8 forms for local printers.

```
F=(STD1,STD2)
```

FSS=acccccc
Specifies a 1 to 8 character functional subsystem name that supports a page-mode printer. If an FSSNAME is not defined on an FSS initialization statement, the functional subsystem name assigned on this statement will cause the generation of a default FSS initialization statement. The FSS statement then defines (by default) the FSSNAME and PROCname specified here.

Notes:

1. This parameter must be specified if MODE=FSS is specified for this PRT(nnnn) command.
2. You must also specify UNIT= if this PRT(nnnn) command defines a 3827 or 3835 printer.

HONORTRC{YES|NO}
Specifies whether or not the TRC=Yes/No parameter specified on the job's OUTPUT JCL statement will be honored or not honored for a given JES mode printer.

JOBname=jobname
The 1 to 8 character name of jobs whose output is to be selected by this printer. you can also specify wildcards on this parameter. See "Using Wildcards" on page 93 for additional information. A null parameter of (JOBNAME=) specifies that jobname is not a criterion for output selection.

K|SPACE=[DOUBLE|R|RESET|SINGLE| TRIPLE|1|2|3]
Specifies the spacing for printed output.

{1|2|3|SINGLE|DOUBLE|TRIPLE}
The printer is to single (1), double (2), or triple (3) space the printed output, regardless of the problem program specifications. When the end of the data set is encountered or when a $T PRTnnnn, K=R command is entered, the printer reverts to problem program specifications.

R|RESET
The printer is to be reset to the problem program-specified spacing.

Note: When you specify the K=(1|2|3|R) parameter for a data set that is being processed on a printer operating in FSS mode, the forced spacing is reset either at the end of that data set, or when you issue a $T PRTnnnn,CKPTPAGE=nnnnn command while that data set is printing. If you issue the $T PRTnnnn,CKPTPAGE command and forced spacing is still desired, you must include the K=(1|2|3|R) operand.

LIMit={m|m-n|m-*}
Specifies the lower and upper limits (in records) for the size of output that is to be selected by this printer.

For both variables *m* and *n*, you can specify a range of values from 0 through 2147483647. *m* and *n* can be equal. If they are not equal, *n* must be larger than *m*.

If you code only *m*, that value becomes both the lower and upper limit. If *m-** is specified, the upper limit is set to the default value of (4294967295).

Note: If the printing of an output group is interrupted, JES2 compares the original size of the output (the number of lines prior to any printing rather than the lines remaining) with the LIM= specifications.

LRECL=nnn
For SNA RJE workstations only, specifies the logical record length (1-255) of data transmitted to this remote printer. Do not include carriage control characters (CCTL) when calculating the value of LRECL. The LRECL value cannot exceed the printer width specified during RMT generation through the &PRTSIZE RMT generation statement for this RJE workstation.

Note that the LRECL= parameter:
- Applies to remote printers only
- Can be changed only when the printer is inactive
- Can be used in place of the PRWIDTH= parameter to specify record sizes for records destined for remote printers.

Mark=[No|Yes]
Specifies for the 3800 printer, whether or not the edge of the separator page is to be marked.

Note: If the printer is under control of a functional subsystem, specifying N suppresses marking on the separator page, but produces a unique mark on the carrier strip (that is, the punched, perforated page edge).

MODE={FSS|JES}
Specifies whether the printer is under control of a functional subsystem (FSS) or JES2.

Notes:
1. When a change of control mode is desired for a printer that is active (that is, output is being printed), you must enter a $P PRTnnnn command for the printer and wait for it to drain before entering this command. The $HASP097 message indicates when the draining process is complete. If the printer is not drained before entering this command, JES2 ignores the command.
2. JES2 ignores the MODE specification if the printer was not defined as a functional subsystem device (using the FSS= parameter) on the PRTnnnn initialization statement. (If a device was mistakenly defined as being a functional subsystem device, JES2 honors the MODE specification, but incorrect output results.)
3. The MODE specification is not supported for remote printers.

NEWPAGE={1|ALL|DEFAULT}
Specifies how a 'skip to channel' is counted as a new page.

1 Specifies that JES2 will treat only skip-to-channel-one as a new page.

ALL
Specifies that JES2 will treat skip-to-any-channel as a new page.

DEFAULT
Specifies that the NEWPAGE specification on the PRINTDEF initialization statement will be used.

NPRO=npro
The non-process runout (NPRO) time interval, in seconds (0-3600). This time interval is used to control the amount of time that an FSS-controlled printer is idle with output in the paper path but not at the stacker. When the time interval expires, the functional subsystem directs the printer to force the output to the stacker. NPRO=0 specifies that a timer-based NPRO is not used.

Note: The NPRO parameter has no effect on cut-sheet page printers (for example, the 3820).

Pause=[No|Yes]
Specifies whether or not the local printer is to pause between data sets. If you specify Y, you can restart the device by changing it from a not-ready to a ready state or by entering a $S PRTnnnn command.

Note: This operand has no effect for a printer under control of a functional subsystem.

PLIM={m|m-n|m-*}
Specifies the lower and upper limits (in pages) for the size of output that is to be selected by this printer.

For both variables *m* and *n*, you can specify a range of values from 0 through 2147483647. *m* and *n* can be equal. If they are not equal, *n* must be larger than *m*.

If you code only *m*, that value becomes both the lower and upper limit. If *m-** is specified, the upper limit is set to the default value (4294967295).

Notes:
1. Normally the PLIM should only be used with functional subsystem printers capable of printing page mode data.
2. If the printing of an output group is interrupted, JES2 compares the original size of the output (the number of pages prior to any printing rather than the pages remaining) with the PLIM= specifications.
3. When PLIM is specified(non zero value) for r(nnnn).pr(m) PRMODE of PAGE will be of significance for remote printers and WS criteria for remote printers.

PRESELCT={Yes|No}
Specifies whether or not JES2 preselects an output group for a device. Specifying PRESELCT=N makes output groups selectable by any device. Y is the default.

Notes:
1. The PRESELCT operand is valid only when the printer is under control of a functional subsystem.
2. When PRESELCT=YES is specified, a printer that is busy printing one output group may preselect another large output group. The operator will be

unable to change the destination of the second output group to another printer once the output group is preselected.

PRMode=(mode1[,...mode8])
The SYSOUT mode(s) (1 to 8 alphameric characters) to be processed by this printer. You can specify up to 8 SYSOUT modes for a single printer. You can also specify wildcards on this parameter. See “Using Wildcards” on page 93 for additional information. Multiple entries must be separated by commas and the list must be enclosed in parentheses. If all processing modes are selectable by this printer, specify a null parameter of PRMODE=(). You must specify the empty parentheses.

Note: For a list of valid process-mode values, see your system programmer.

PRWIDTH=nnn
Specifies the number (1-255) of characters printed on one line. The PRWIDTH value cannot exceed the printer width specified during RMT generation through either the &PRTSIZE or the &PRFOTLW RMT generation statements for this RJE workstation.

Note that the PRWIDTH= parameter:
- Applies to remote printers only
- Can be changed only when the printer is inactive.
- Should not exceed 120 for printers attached to a BSC terminal defined as a 2770 without the buffer-expansion feature.

CLass|Queue=c1[...c15]
The output class(es) (A-Z, 0-9) the printer is to process. You can specify up to 15 output classes.

Routecde=routecde
Specifies up to four internal route codes to be assigned to this printer. If more than one route code is specified, enclose the list in parentheses. You can also specify wildcards on this parameter. See “Using Wildcards” on page 93 for additional information. For specification requirements, see “Route Codes” on page 92.

Notes:
1. JES2 does not allow remote printers to change Routecde= to another destination or to delete Routecde from the work selection list.
2. NODENAME=REQUIRED on the DESTDEF initialization statement will cause JES2 to require that a userid be prefixed with a node name.

If destid is specified alone, it refers to both the node and the remote.

Ummmm
Indicates that output for special local routing is selected. The special routing numbers range from 1 to 32767.

Routing to a remote device can be specified in any of the following ways:
- LOCAL|ANYLOCAL
- Rnnnn
- destid
- userid

LOCAL|ANYLOCAL
Indicates routing to a local device.

Rnnnn
Indicates routing to the specified remote device. Rnnnn can also be specified as RMnnnn or RMTnnnn. The value specified for nnnn can range from 1 to 32767.

destid Indicates routing to a destination at the local node.

userid Indicates routing to a valid TSO userid. Generic userids are also valid. A generic userid is a userid that ends in an asterisk (*), and refers to all userids that begin with the characters preceding the *. Note that the * can only be specified in the last position of the userid.

Note: This command accepts Nnnnn or an installation-defined name as the value of the R= parameter, however, the resulting internal route code must be for the local node.

RANGE={Jnnnnn|Snnnnn|Tnnnnn} [-nnnn]
Specifies the range (1-65534) of batch jobs (J), started tasks (S), or time sharing users (T) whose output is to be selected by this printer. If you code this parameter, you can specify one or two values:

- If you specify one value, that value becomes both the low and the high end of the range.
- If you specify two values, the first value is the low end of the range and the second value the high end. The two values can be equal. If they are not equal, the second value must be larger than the first value.

SELECT={PRINTnn|EXCHnn|BASICnn}
Specifies the device type (PRINT, EXCH, or BASIC) and the device subaddress (0 - 14) to which JES2 sends output for this remote device.

The SELECT= options:

PRINTnn
Sends output to the remote printer.

EXCHnn
Sends output to an exchange diskette service.

BASICnn
Sends output to a basic exchange diskette service.

The value *nn* specifies the device number (1 to 15; subaddress 0 to 14). If you do not specify the *nn* value, JES2 provides a default of any available device of the type specified (subaddress=15).

Note that the SELECT= parameter:
- Applies to remote printers only
- Can be changed only when the printer is inactive
- Is ignored for BSC devices
- Should specify a BASIC type only if CCTL=NO and the LRECL= value does not exceed 128.

Sep=[No|Yes]
Specifies whether JES2-supplied separator pages are to be placed between output groups. If you specify N, the JESNEWS data set is not printed. If this is a remote printer, specifying N also suppresses the transmission of operator messages to the RJE workstation, with the exception of the $HASP190 setup message.

Note: If you specify Sep=Y, but SEPPAGE=(LOCAL=NONE) (for local printers) or SEPPAGE=(REMOTE=NONE) (for remote printers) was specified on the PRINTDEF initialization statement or using the $T PRINTDEF command, default JES2 separator pages are not produced. If you specify Sep=N, a user created separator page (made in Exit 1) is not suppressed.

SEPCHARS={CURRENT|DEFAULT}
Specifies the character arrangement table to use for separator pages printed on the 3800 printer. The NUICS parameter on the PRINTDEF initialization statement defines this value at system initialization.

CURRENT
Specifies use of the character arrangement table loaded in the 3800. The first character arrangement table is used if the installation default is not loaded.

DEFAULT
Specifies use of the installation default character arrangement table. If not already loaded, this parameter specifies that this table be loaded before printing the separator pages.

SEPDS=[No|Yes]
Specifies whether or not a header separator page is to be produced for each copy of each data set within an output group. If the printer is running under JES2, specifying Y causes JES2 to invoke EXIT 15 (output data set/copy separators), if enabled, to generate separator pages. For printers under control of a functional subsystem, SEPDS is supported with a default separator page.

SETUP={HALT|NOHALT}
Specifies whether or not JES2 is to halt the printer and issue the $HASP190 message requesting the operator to verify the output control specifications when the output requirements for a particular job differ from the output characteristics specified for the printer. (If halted, the printer must be restarted using the $S command.)

SUSPEND=[No|Yes]
Specifies whether a remote printer can (No) or cannot (Yes) use th printer-interrupt feature which allows the remote operator to interrupt printing for the transmitting of jobs or JES2 commands to this JES2 system.

Notes:

1. Applies only to printers connected to BSC hardware terminals.
2. This parameter can only be changed when the printer is inactive.

T|UCS=ucs
For impact printers, T= specifies the identifier (1 to 4 alphameric or special ($ # @) characters) of the print train character set that is mounted on the specified printer. The identifier must be available in SYS1.IMAGELIB and the indicated printer must have the universal character set (UCS) feature. If loading is required for Rnnnn.PRm, it must be done by the operator at the JES2 RJE workstation.

For 3800 printers, T= specifies both the identifier (1 to 4 alphameric characters) of the print train character set that is mounted on the printer and the installation's default character set for SYSOUT data sets that do not specify the UCS= parameter via JCL. This identifier must be available in SYS1.IMAGELIB.

Notes:

1. If you specify an invalid identifier, JES2 bypasses the UCS loading procedure and issues the $HASP190 setup message so the operator can specify a valid image.
2. If you specify T=0 or a zero value was specified for the UCS parameter on the PRINTDEF initialization statement, JES2 does not load the UCS buffer.

   You would want to nullify the UCS operand when running a printer in FSS mode if you wish to use the default character set specified in the FSS procedure used to start the printer.
3. This parameter is only valid for a 1403 printer that has the UCS feature.

TRKCELL={No|Yes}
Specifies whether data sets that belong to a SYSOUT class with the track-cell characteristic are read from the spool in one operation. The TRKCELL parameter on the SPOOLDEF initialization statement specifies the number of records in the track cell. If you specify NO, one record is read from the spool for each despooling operation.

TRace={No|Yes|P}
Specifies whether tracing is to be activated or deactivated for this print processor. This operand requires system authority.

No
Tracing is disabled.

P|Yes
Tracing is activated if trace IDs 11, 12, 14, and 15 are currently enabled.

Note: Trace IDs 11, 12, 14, and 15 may be enabled either at initialization on the TRACE(n) statement or using the $S TRACE(n) command.

TRANS={Yes|No}
IF MODE=JES, the TRANS= parameter on this statement affects data translation:

- If TRANS=YES, JES2 translates each line of output sent to the device regardless of the device type or the setting of the TRANS= parameter of the PRINTDEF initialization statement.
- If TRANS=NO, JES2 does not translate output sent to the device regardless of the device type or the setting of the TRANS= parameter on the PRINTDEF initialization statement.
- If TRANS= is omitted and the PRINTDEF initialization statement specifies TRANS=YES, and the device is either a local 1403 or a remote printer, JES2 translates each line of output sent to the device. Otherwise, JES2 does not translate output sent to the device.

UCSVerfy={No|Yes}
Specifies whether (YES) or not (NO) UCS verification processing is performed when a UCS image is loaded for 4245 and 4248 printers. UCS images are loaded on these printers only when required for print processing, not in response to a $T PRT command that specifies a change in UCS setup. This parameter can be modified through a JES2 warm start.

YES Provides UCS verification and causes the band image to be displayed to the 4245 and 4248 printers.

NO Suppresses the image display.

UNIT={devnum|/devnum}

Specifies no value or a 3-digit or 4-digit hexadecimal device number. Device numbers can be specified by any of the following formats:

```
UNIT=        (to specify a null value)
UNIT=ddd
UNIT=dddd
UNIT=/ddd
UNIT=/dddd
```

where ddd and dddd represent the device numbers.

A slash (/) can optionally precede the device number (for compatibility with other commands that require a slash to denote a 4-digit device number).

Note: You can omit this parameter when altering local printers, however, if you do and the printer requires a unit address (for example, all JES mode printers), you must specify a unit address before starting the printer.

VOLUME=(v1[,...v4])

The volume serial (5-6 characters) of a volume containing a spool data set. Only the output of jobs which reside on one or more of the specified volume(s) are to be selected by this printer. You can specify up to 4 volumes. Multiple entries must be separated by commas and the list must be enclosed in parentheses. A null parameter of VOLUME=() specifies that volume is not a criterion for output selection. You must specify the empty parentheses.

Writer=xxxxxxxx

The 1 to 8 alphanumeric or special ($ # @) character writer name assigned to this printer. You can also specify wildcards on this parameter. See “Using Wildcards” on page 93 for additional information. A null parameter of (W=) specifies that no writer name is assigned to this printer.

Note: If you do not assign a writer name to the printer, and Writer is specified as an exact match criteria in the work selection (WS) list, the printer selects only output groups without a writer name.

WS=ws

Specifies the work selection criteria for this printer. Using any combination of user and JES2-defined criteria, you may specify a maximum of 19 criteria in the WS= list. Criteria that are not specified are not considered during output selection although JES2 does use them to determine setup requirements. Multiple entries must be separated by commas and the list must always be enclosed in parentheses (even if only one criterion is specified).

The general rules for specifying a printer work selection list are:

1. One slash (/) can precede or follow one of the selection criterion. Criteria placed before the slash must be matched exactly if the work is to be selected. Criteria placed after the slash do not have to matched exactly except in the following cases:
   Queue
   Routecde
   PRMode
   Volume

   Table 55 on page 793 defines each criterion when placed either before or after the slash.
2. Queue, Routecde, PRMode, and Volume can be specified as multiple values on the output device statements. Placing these criteria before the

slash in the WS= list, indicates a left to right priority order of multiple values, if multiple values have been specified. Placing these criteria after the slash indicates no priority order of multiple values, but a match is still required.

3. The order of those criteria specified after the slash indicates the priority (highest to lowest, in left to right order) in which JES2 attempts to match them.
4. Specifying a minus sign (-) before a criterion causes that criterion to be removed from the list.

   Note: An invalid operand message ($HASP650) is issued if an error is found in the WS operand, that is, if you try to remove a criterion that is not there. For example, if you enter $tprt1,ws=(-o), you get the $HASP650 message because ‘o’ (forms overlay) is not in the current work selection list for printer1.
5. Specifying a criterion that is not currently specified in the list adds it to the end of the list either before or after the slash, depending on the placement of the slash in the command. If the slash is omitted from the command, JES2 assumes that the slash is at the end of the command.
6. For all exact match criteria, if the output matches the device for a specific criterion, but the output specifies demand (DMND) setup, the match is not considered an exact match and the output is not selected because demand setup indicates that the characteristics do not remain the same throughout the output group.

   To print demand (DMND) setup output, the work selection criteria specified for the printer that is referenced by DMND must be removed from the list.
7. If the device is a remote printer, route code (R=) must be specified in the work selection list.
8. The LIMit subparameter has no effect as a work selection value for files received from a node that does not provide a page count for its files. For more information, refer to the sending node’s reference documentation.
9. In general, the smaller the work selection list the less the placement of certain criteria within the list affects the work selection. Job output elements are queued to the class queues by route code, then priority. This information should be used to tune the work selection list to optimize performance.

X|CHAR=id

The identifier(s), 1 to 4 alphameric characters, available in SYS1.IMAGELIB, for the first through fourth character arrangement tables, respectively, to be used in the specified 3800 printer.

Note: You should specify this operand only if you have received an error message indicating that a character arrangement table was not found.

Authority Required

This command requires **device** and **system** authority. The description of the $T RDRnn command explains how to ensure the proper MVS system command group authority is assigned.

This command requires **update** security access authority. For a description of assigning command input authority, see *z/OS JES2 Initialization and Tuning Guide*.

Processing Considerations

- The setting of forms, trains, carriage controls, or FCB image is valid only when the specified device is inactive, pausing, or awaiting operator action (halted).
- You should either issue a $P PRTnnnn command and wait for the device to drain before entering the $T command, or issue the $T command while the system is waiting for forms to be loaded. Because JES2 does not issue a setup message for a printer that does not require operator intervention to change the carriage control, the requested image cannot be overridden unless there is an error.
- If you are uncertain of the controls in effect, enter the $D PRT command or the $D U command for the printer in question.

Scope

Single Member. This command will be in effect for this member only. There is no need to have this command issued to all members of the MAS.

Messages

The $HASP603 message displays the status of the specified printer and its current characteristics.

The $HASP003 rc=65 message indicates that the device type specified through the UNIT= parameter does not match the defined JES2 device information.

The $HASP003 rc=66 message indicates that the device type specified through the UNIT= parameter does not exist.

Examples

Because of the number of examples presented and the length of the resulting message, $HASP603 is shown only for the first example.

```
1  $t prt101,unit=0b08,fss=psf1,mode=fss
$HASP603 PRT101    UNIT=0B08,STATUS=DRAINED,BURST=NO,CKPTLINE=0,
$HASP603           CKPTMODE=PAGE,CKPTPAGE=100,CKPTSEC=0,
$HASP603           CREATOR=,DEVFCB=,DEVFLASH=****,FCB=6080,
$HASP603           FORMS=(STD,,,,,,,),FSS=PSF1,HONORTRC=YES,
$HASP603           JOBNAME=,LASTFORM=STD,LIMIT=(0,*),
$HASP603           COPYMARK=DATASET,MARK=YES,MODE=FSS,
$HASP603           NEWPAGE=DEFAULT,NPRO=5,PAUSE=NO,PLIM=(0,*),
$HASP603           PRESELCT=YES,PRMODE=(LINE,PAGE),QUEUE=V,
$HASP603           RANGE=(J1,999999),ROUTECDE=(LOCAL),SEP=YES,
$HASP603           SEPCHARS=DEFAULT,SEPDS=NO,SETUP=HALT,SPACE=,
$HASP603           TRACE=NO,TRANS=DEFAULT,TRKCELL=YES,UCS=GB12,
$HASP603           UCSVERFY=NO,VOLUME=(,,,),WRITER=,
$HASP603           WS=(W,Q,R,PRM,LIM,UCS,FCB/F,P),FSATRACE=NO
```

JES2 loads FSS line-mode printer 101 at address 0B08 of the local installation.

```
2  $t r1.pr1,select=basic8,cctl=yes,lrecl=128
```

JES2 sends SYSOUT destined for this remote printer to a basic exchange diskette service and places carriage control characters in the SYSOUT stream transmitted to remote printer 1.

```
3  $t prt2,f=228,prmode=page,t=pn
```

JES2 loads the forms numbered 228 and a PN train into local printer 2. Printer 2 now selects only those data sets that specify forms 228 and a PRMODE of PAGE.

```
4  $t prt6,k=r,mark=y,y=cm01,x1=gf10,x2=fm15
```

JES2 resets local printer 6 to the program-specified spacing. Printer 6 now uses:
- Edge marking for separator pages
- Copy modification module CM01
- Character arrangement tables GF10 and FM15.

5 `$t prt3,q=acb,r=1,ws=(q,r/),sep=y,pause=y,`
`setup=nohalt`

Printer 3 prints all output in classes A, C, B, (in that order) that was to be routed to the local device with routing set to 1. As part of its processing, printer 3 pauses between data sets and places separator pages between output groups. SETUP=NOHALT specifies that printer 3 does not halt and issue the $HASP190 message if a job's output specifications do not match those of the printer.

6 `$t r8.pr2,tr=y`

JES2 traces the logic of the JES2 processor associated with remote printer 2 at workstation 8.

7 `$t r2.pr1,r=(r7,r8,r9,r10),devfcb=wxyz`

If Routecde is specified in the work selection list, remote printer 1 at RJE workstation 2 processes only the output that was destined for RJE workstations 7, 8, 9, or 10. JES2 uses "wxyz" as the default FCB attribute if C=wxyz has also been specified. In contrast with the second line of the $HASP603 message shown in the first example:

C=STD1,STD

the $HASP603 message now displays:

C=wxyz,DEFAULT

Note that DEFAULT does not appear in the message if the current FCB is not the specified default FCB (devfcb=wxyz, in this example). For a complete description of the resulting message depending on the C= and DEVFCB= settings, see $HASP603 in *z/OS JES2 Messages*.

8 The current work selection list for printer1 is:

`WS=(w,q,r,pmd,lim/f,t,c,p)`

To remove **w** from the list, enter: **$tprt1,ws=(-w)** and the result is:

`WS=(q,r, pmd,lim/f,t,c,p)`

To remove **w** from the list and add burst **b** as an exact match criterion, enter: **$tprt1,ws=(-w,b/)** and the result is:

`WS=(q,r,pmd,lim,b/f,t,c,p)`

To move **pmd** after the slash and switch the positions of **q** and **r**, enter: **$tprt1,ws=(r,q,lim/pmd)** and the result is:

`WS=(w,r,q,lim/f,t,c,p,pmd)`

Table 55. Printer Work Selection Criteria

CRITERION	BEFORE SLASH (/)	AFTER SLASH (/)
Burst	The output's B= specification must match the Burst specification of the printer. Otherwise this output group is not selected.	It is not required that the B= specification of the output group match the Burst specification of the printer. However, JES2 issues the $HASP190 setup message if a difference exists.
CReator	The output group's CReator specification must match the CReator specification of the printer. Otherwise, this output group is not considered selectable.	It is not required that the CReator= specification of the output group match the CReator= specification of the printer. However, JES2 issues the $HASP190 setup message if a difference exists.
{FCB|C}	The output group's FCB image or carriage control tape must match the current FCB or carriage control tape of the output device. Otherwise, this output group is not selected.	It is not required that the output group match the FCB or carriage control tape specification of the printer. However, if differences exist in both the FCB and FORMS specifications, JES2 issues the $HASP190 setup message.
{FLash|O}	The output group's FLASH or forms overlay must match the current FLASH (O=) specification for the output device. Otherwise the output group is not selected.	It is not required that the output group match the FLASH (O=) specification for the printer.However, JES2 issues the $HASP190 setup message if a difference exists.
Forms	The output group's forms specification must match one of the forms specified for the output device. Otherwise the output group is not selected. If there are multiple forms, the forms have equal priority.	It is not required that the forms of the output group match the current forms setup of the device. However, JES2 issues the $HASP190 setup message f a difference exists. In this case it is preferred that the forms of the output group match one of the forms specified for the device.
JOBname	The output group's jobname must match the jobname specified (JOBNAME=) for this device.	It is not required that the job name of the output group match the job name specified (JOBNAME) for this device. JES2 attempts to consecutively select all eligible output for a particular job.
LIMit	The amount of output generated by an output group must fall within the limits set for this device, otherwise the output group is not considered selectable. Page limits are checked if the data set is in page mode. Record limits are checked if the data set is in line mode. If the page data set contains some line mode data, then both page limits and record limits are checked.	It is not required that the amount of output generated by the output group fall within the limits. This subparameter has no effect as a work selection value for files received from a node that does not provide a page count for its files. For more information, refer to the sending node's reference documentation.
{PMD} {PRMode}	The output group's process mode must match one of the process modes (PRMODE=) specified for the output device. Otherwise the output group is not selected. If there are multiple PRMODEs, the list is considered to be in priority sequence with the highest priority given to the first PRMODE in the list.	The process mode of the output group must match the process mode (PRMODE=) specified for the output device, but if there are multiple PRMODEs the list is not in priority sequence.

Table 55. Printer Work Selection Criteria (continued)

CRITERION	BEFORE SLASH (/)	AFTER SLASH (/)
Priority	The priority of the output group is to be considered. Whether specified before or after the slash, higher priority output groups are preferred. Placement of 'P' in the WS list gives priority importance in the work selection process. There is no 'matching' done for priority. *Note:* Output groups are added to the class queues in priority order, and the class queues are scanned in the device's class list order. The output groups are not scanned by priority order across class queues. Thus, if all other work selection criteria for the output groups are equal, all of the output groups for the first class in the device's class list are selected in priority order before the output groups for the second class in the list. This is the selection order even if higher priority output groups exist on the class queue for the second class in the device's list.	Same as before slash.
Queue	When Queue is specified in the WS list, only those output classes specified for this device are searched for work. Otherwise all classes (A-Z and 0-9) are searched. It is therefore suggested that 'Q' always be included in the WS list. The sequence of the list is the order of search.	The output classes specified for this device are not in priority sequence. All classes are equally preferred. Output groups in the first class in the list are selected first if they meet all other requirements.
RANGE	The job number of the job associated with the output group must be within the range (RANGE=) specified for this device.	It is not required that the job number of the job associated with the output group be within the specified range (RANGE=).
Routecde	The output group's destination must match the route code (R=) specified for this device. Otherwise the output group is not selected. If there are multiple route codes specified for the device, the list is considered to be in priority sequence and a match with the first route code is preferred.	The destination of the output group must match the route code (R=) specified for this device, but if there are multiple route codes the list is not considered to be in priority sequence.
{UCS|T}	The output group's universal character set must match the universal character set (UCS=) specified for this device. Otherwise the work is not selected.	It is not required that the universal character set of the output group match the universal character set specified for this device. However, JES2 issues the $HASP190 setup message if a difference exists.
Volume	The volume of the job associated with this output group must match the volume (VOLUME=) specified for this device. If there are multiple volumes specified, the list is considered to be in priority sequence with the leftmost volume having the highest priority.	The volume of the job associated with this output group must match the volume (VOLUME=) specified for this device but if there are multiple volumes specified, the list is not considered to be in priority sequence.
Writer	The writer name specified for the output group must match the writer name specified (W=) for this device, otherwise the output group is not considered selectable.	It is not required that the writer name of the output group match the writer name (W=) specified for the device.

$T PUNnn and $T Rnnnn.PUm - Control a Punch

Function

- To specify punch work selection and processing characteristics
- To override a system request for a setup you are unable to fulfill.
- To start or stop tracing of the JES2 processor associated with the specified punch.

One or more parameters on this command accepts wildcards. Parameter descriptions will note that.

Syntax

```
►►─$T─┬─PUN───┬─┬─nn─┬─────────┬─┬──────────────────────────────────────────────┬──►
      └─PUNCH─┘ │    └─-─┬─mm─┬─┘ │  ┌─────────────────────────────────────┐   │
                │        └─*──┘   │  │                                     │   │
                │                 │  │  ┌─────────────────────────────────┐  │   │
                │                 │  │  │                                 │  │   │
                │                 │  │  ▼                                 │  │   │
                │                 │  │  ┌─,──────────────────────────────┐  │   │
                │                 │  │  │                                │  │   │
                │                 │  │  ▼                                │  │   │
                │                 │  │  ┌─nn─┬─────────┬─┬─────────┬─┐  │  │   │
                │                 │  │  │    └─*──┘   │ │    └─-─┬─mm─┬─┘  │  │   │
                │                 │  │  │             │ │        └─*──┘    │  │   │
                │                 │  │  └─────────────┘ │                 │  │   │
                │                 │  │                  │                 │  │   │
                │                 │  │                  └─────────────────┘  │   │
                │                 │  │                                       │   │
                │                 │  │                                       │   │
                │                 │  │                                       
```

```
►──┬──────────────────────────────────────────────────────────────────────────────────────────────────────────────┤
   │ ,WS=──┬─ws──────────┬─┬
   │       │             │ │
   │       │   ┌──,──┐   │ │
   │       └──(──▼─ws──┘──)─┘
```

Notes:

1 *form* can be coded up to 8 times

2 *prmode* can be coded up to 8 times

Selection Keywords:

```
├──┬──────────────────────────────────────────────────────────────────────────────────────────────────────────────►
   │ ,──/──CReator──┬─=──┬─creator──┬─┬ │ ,──/──Forms──┬─=──┬─form──────────────────────┬─┬
   │                │ ^= │          │ │ │              │ ^= │           ┌──,──────┐   │ │
   │                │ >  │          │ │ │              │    │           │   (1)   │   │ │
   │                │ <  │          │ │ │              │    └──(──────▼─form──────┘──)─┘
```

```
►──┬──────────────────────────────────────────────────────────────────────────────────────────────────────────────►
   │ ,──/──JOBname──┬─=──┬─jobname──┬─┬ │ ,──/──Pause──┬─=──┬─┬─No──┬─┬
   │                │ ^= │          │ │ │              │ ^= │ │ Yes │ │
   │                │ >  │          │ │ │              │    │ └─────┘ │
   │                │ <  │          │ │ │              │    └─────────┘
```

```
►──┬──────────────────────────────────────────────────────────────────────────────────────────────────────────────►
   │ ,──┬─/──CLass─┬──┬─=──┬─queue──┬─┬ │ ,──/──Sep──┬─=──┬─┬─No──┬─┬ │ ,──/──SEPDS──┬─=──┬─┬─No──┬─┬
   │    │          │  │ ^= │        │ │ │            │ ^= │ │ Yes │ │ │              │ ^= │ │ Yes │ │
   │    └─/──Queue─┘  │ >  │        │ │ │            │    │ └─────┘ │ │              │    │ └─────┘ │
   │                  │ <  │        │ │ │            │    └─────────┘ │              │    └─────────┘
```

```
►──┬──────────────────────────────────────────────────────────────────────────────────────────────────────────────►
   │ ,──/──SETUP──┬─=──┬─┬─HALT───┬─┬ │ ,──/──TRace──┬─=──┬─┬─No──┬─┬ │ ,──/──UNIT──┬─=──┬─unit──┬─┬
   │              │ ^= │ │ NOHALT │ │ │              │ ^= │ │ P   │ │ │             │ ^= │       │ │
   │              └────┘ └────────┘ │ │              │    │ │ Yes │ │ │             │ >  │       │ │
   │                                │ │              │    └─────────┘ │             │ <  │       │ │
```

```
►──┬──────────────────────────────────────────────────────────────────────────────────────────────────────────────┤
   │ ,──/──Writer──┬─=──┬─writer──┬─┬
   │               │ ^= │         │ │
   │               │ >  │         │ │
   │               │ <  │         │ │
```

Notes:

1 *form* can be coded up to 8 times

Parameters

PUNnn
The local punch that is affected by this command.

Rnnnn.PUm
The remote punch that is affected by this command.

CCTL={YES|NO}
Specifies whether (YES) or not (NO) JES2 places carriage control characters in the output stream transmitted to this remote punch. If you specify CCTL=NO, JES2 neither compresses (COMPRESS=NO) nor compacts (COMPACT=NO) data, and standard character string (SCS) control characters are not placed in the output string.

Note that the CCTL= parameter:
- Must be specified as CCTL=NO if you also specify SELECT=BASICnn
- Applies to remote punches only
- Can be changed only when the punch is inactive

- Can be used with SNA devices only.

CKPTLINE=nnnnn
The maximum number of lines (range 0-32767) in a logical page. JES2 uses this value, with the CKPTPAGE value, to determine when to take output checkpoints.

Note: CKPTLINE is the only value used to define a logical page for punch devices.

CKPTPAGE=nnnnn
The number (1-32767) of logical pages to be punched before each output checkpoint is taken by JES2. This parameter and CKPTLINE control the amount of checkpoint activity to spool.

CMPCT={YES|NO}
Specifies whether (YES) or not (NO) this remote SNA punch has compaction capabilities. If it does and the corresponding RJE workstation definition (RMTnnnn initialization statement) specifies COMPACT=YES, JES2 forces this remote punch to use compaction.

If you specify CMPCT=YES, JES2 forces compression of the data (COMPRESS=YES). If you specify CMPCT=NO, JES2 turns off compaction, even if it is specified on the RJE workstation definition.

Note that the CMPCT= parameter:
- Is ignored for BSC devices
- Applies to remote punches only
- Can be changed only when the punch is inactive
- Must be CMPCT=NO if CCTL=NO

COMPACT|Z={nn|cccccccc}
Specifies the compact table number or the 1 to 8 character compact table name that must be defined through a COMPACT initialization statement.

Note that the COMPACT= parameter:
- Applies to SNA remote punches only
- Can be changed only when the punch is inactive.

COMPRESS={YES|NO}
Specifies whether (YES) or not (NO) this remote SNA punch has compression/expansion capabilities.

If you specify COMPRESS=YES and the corresponding RJE workstation and LINE(nnnn) initialization statement specify COMPRESS=YES, JES2 forces this remote SNA punch to use compression. If you specify COMPRESS=NO, JES2 turns off compression, even if the corresponding RJE workstation specifies COMPRESS=YES.

Note that the COMPRESS= parameter:
- Is ignored for BSC devices
- Applies to remote punches only
- Can be changed only when the punch is inactive

For SNA RJE workstations only
- COMPRESS=NO must be specified if you also specify CCTL=NO
- Sets on the corresponding bit setting in the RJE BIND if COMPRESS=YES.

CReator=jcccccccc
Specifies the 1 through 8 character userid that creates the SYSOUT data sets

to be processed. You can also specify wildcards on this parameter. See “Using Wildcards” on page 93 for additional information.

j An alphabetic character (A-Z) or any of the special characters ($, #, or @).

ccccccc
Any combination of EBCDIC characters except a comma, a right parenthesis, or an equal sign.

Forms=form
The 1 to 8 alphanumeric or special characters ($ # @) character name of the forms that are loaded into this punch. You can also specify wildcards on this parameter. See “Using Wildcards” on page 93 for additional information. You may specify up to 8 forms.

FLUSH={Yes|No}
Specifies whether or not JES2 punches a blank card following each data set or data set copy processed by this device.

Notes:

1. Applies only to remote punches.
2. This parameter can only be changed when the session is inactive.

JOBname=jobname
The 1 to 8 character name of jobs whose output is to be selected by this punch.

You can also specify wildcards on this parameter. See “Using Wildcards” on page 93 for additional information. A null parameter of (JOBNAME=) specifies that jobname is not a criterion for output selection.

LIMit={m|m-n|m-*}
Specifies the lower and upper limits (in records) for the size of output that is to be selected by this punch.

For both variables *m* and *n*, you can specify a range of values from 0 through 2147483647. *m* and *n* can be equal. If they are not equal, *n* must be larger than *m*.

If you code only *m*, that value becomes both the lower and upper limit. If *m-** is specified, the upper limit is set to the default value of (4294967295).

Note: If the punching of an output group is interrupted, JES2 compares the original size of the output (the number of cards prior to any punching rather than the cards remaining) with the LIM= specifications.

LRECL=nnn
For SNA RJE workstations only, specifies the logical record length (1-255) of data transmitted to this remote punch.

Note: You can change the value of LRECL= only when this remote punch is inactive.

Pause=[No|Yes]
Specifies whether or not the local punch is to pause between data sets. If you specify Y, the punch can be restarted by changing it from a not-ready to a ready state or by entering a $S command.

PRMode=(mode1[,...mode8])
The SYSOUT mode(s) (1 to 8 alphameric characters) to be processed by this punch. You can specify up to 8 SYSOUT modes for a single punch. You can also specify wildcards on this parameter. See “Using Wildcards” on page 93 for

additional information. Multiple entries must be separated by commas and the list must be enclosed in parentheses. If all processing modes are selectable by this punch, specify a null parameter of PRMODE=(). You must specify the empty parentheses.

Note: For a list of valid process-mode values, see your system programmer.

Class|Queue=c1[...c15]
The output class(es) (A-Z, 0-9) this punch is to process. You can specify up to 15 output classes.

R|Routecde=routecde
Specifies up to four internal route codes to be assigned to this card punch. A route code indicates that this card punch is to be eligible for punch routing. The value for all routing numbers can range from 1 to 9999. You can also specify wildcards on this parameter. See “Using Wildcards” on page 93 for additional information.

Notes:

1. JES2 does not allow remote punches to change Routecde= to another destination or to delete Routecde from the work selection list. For specification requirements, see “Route Codes” on page 92.
2. NODENAME=REQUIRED on the DESTDEF initialization statement will cause JES2 to require that a userid be prefixed with a node name.

If destid is specified alone, it refers to both the node and the remote.

Ummmm
Indicates that output for special local routing is selected. Wildcards are not supported.

Routing to a remote device can be specified in any of the following ways:
- LOCAL|ANYLOCAL
- Rnnnn
- destid
- userid

LOCAL|ANYLOCAL
Indicates routing to a local device.

Rnnnn
Indicates routing to the specified remote device. Rnnnn can also be specified as RMnnnn or RMTnnnn.

destid Indicates routing to a destination at the local node.

userid Indicates routing to a valid TSO userid. Generic userids are also valid. A generic userid is a userid that ends in an asterisk (*), and refers to all userids that begin with the characters preceding the *. Note that the * can only be specified in the last position of the userid.

To specify a null route code, use Routecde=() to cause this punch to select no work if Routecde is also specified in the WS list. Use the Unnnn form to specify this punch as a special local punch.

Note: Route codes for local devices should be used cautiously. Once a card punch has been assigned a route code or route codes, it is considered available only for a job that requests punched output through the DEST keyword on the /*OUTPUT control statement or JCL OUTPUT statement, or through the /*ROUTE control statement or through operator command.

Default: LOCAL

RANGE={Jnnnnn|Snnnnn|Tnnnnn} [-nnnnn]
Specifies the range (1-65534) of batch jobs (J), started tasks (S), or time sharing users (T) whose output is to be selected by this punch. If you code this parameter, you can specify one or two values:
- If you specify one value, that value becomes both the low and the high end of the range.
- If you specify two values, the first value is the low end of the range and the second value the high end. The two values can be equal. If they are not equal, the second value must be larger than the first value.

SELECT={PUNCHnn|EXCHnn|BASICnn}
Specifies the device type (PUNCH, EXCH, or BASIC) and the device subaddress (0 - 14) to which JES2 sends output for this remote device.

The SELECT= options:

PUNCHnn
Sends output to the remote punch (card format).

EXCHnn
Sends output to an exchange diskette device.

BASICnn
Sends output to a basic exchange diskette device.

The value *nn* specifies the device number (1 to 15; subaddress 0 to 14). If you do not specify the *nn* value, JES2 provides a default of any available device of the type specified (subaddress=15).

If this is the only punch defined and you do not specify SELECT=PUNCH, JES2 changes the media byte presentation service portion of the RJE BIN to reflect a non-card format.

Note that the SELECT= parameter:
- Applies to remote punches only
- Can be changed only when the punch is inactive
- Is ignored for BSC devices
- Should specify a BASIC type only if CCTL=NO and the LRECL= value does not exceed 128.

Sep=[No|Yes]
Specifies whether (Y) or not (N) separator cards are to be placed between output groups.

SEPDS=[No|Yes]
Specifies whether (Y) or not (N) a header separator card is to be produced for each copy of each data set within an output group. Although JES2 does not actually generate separator cards, it does invoke EXIT 15 (Output Data Set/Copy Separators), if enabled, to generate separator cards.

SETUP={HALT|NOHALT}
Specifies whether or not JES2 is to halt the punch and issue the $HASP190 message requesting the operator to verify the output control specifications when the output requirements for a particular job differ from the output characteristics specified for the punch. (If halted, the punch must be restarted using the $S command.)

SUSPEND={Yes|No}
Specifies whether a remote punch can (No) or cannot (Yes) use the

punch-interrupt feature which allows the remote operator to interrupt punching for the transmitting of jobs or JES2 commands to this JES2 system.

Notes:

1. Applies only to punches connected to BSC hardware terminals.
2. This parameter can only be changed when the punch is inactive.

TRace={No|P|Yes}
Specifies whether tracing is to be activated or deactivated for this punch processor. This operand requires system authority.

No
Tracing is disabled.

P|Yes
Tracing is activated if trace IDs 11 and 12 are currently enabled.

Note: Trace IDs 11 and 12 may be enabled either at initialization on the TRACE(n) statement or using the $S TRACE(n) command.

UNIT={devnum|/devnum}
Specifies a 3-digit or 4-digit hexadecimal device number. Device numbers can be specified by any of the following formats:

```
UNIT=ddd
UNIT=dddd
UNIT=/ddd
UNIT=/dddd
```

where ddd and dddd represent the device numbers.

A slash (/) can optionally precede the device number (for compatibility with other commands that require a slash to denote a 4-digit device number).

VOLUME=volume
The volume serial (5-6 characters) of a volume containing a spool data set. Only the output of jobs which reside on one or more of the specified volume(s) are to be selected by this punch. You can specify up to 4 volumes. Multiple entries must be separated by commas and the list must be enclosed in parentheses. A null parameter of VOLUME=() specifies that volume is not a criterion for output selection. You must specify the empty parentheses.

Writer=xxxxxxxx
The 1 to 8 alphanumeric or special ($ # @) character writer name assigned to this punch. You can also specify wildcards on this parameter. See “Using Wildcards” on page 93 for additional information. A null parameter of (W=) specifies that no writer name is assigned to this punch.

Note: If you do not assign a writer name to the punch, and Writer is specified as an exact match criteria in the work selection (WS) list, the punch selects only output groups without a writer name.

WS=ws
Specifies the work selection criteria for this punch. Using any combination of user and JES2- defined criteria, you may specify a maximum of 19 criteria in the WS= list. Criteria which are not specified are not considered during output selection although JES2 does use them to determine setup requirements. Multiple entries must be separated by commas and the list must always be enclosed in parentheses (even if only one criterion is specified). The general rules for specifying a punch work selection list are:

1. One slash (/) can precede or follow one of the selection criterion. Criteria placed before the slash must be matched exactly if the work is to be selected. Criteria placed after the slash do not have to matched exactly except in the following cases:
   Queue
   Routecde
   PRMode
   Volume

   Table 56 on page 804 defines each criterion when placed either before or after the slash.
2. Queue, Routecde, PRMode, and Volume can be specified as multiple values on the output device statements. Placing these criteria before the slash in the WS= list, indicates a left to right priority order of multiple values, if multiple values have been specified. Placing these criteria after the slash indicates no priority order of multiple values, but a match is still required.
3. The order of those criteria specified after the slash indicates the priority (highest to lowest, in left to right order) in which JES2 attempts to match them.
4. Specifying a minus sign (-) before a criterion causes that criterion to be removed from the list.

   Note: An invalid operand message ($HASP650) is issued if an error is found in the WS operand, that is, if you try to remove a criterion that is not there. For example, if you enter $tpun1,ws=(-f), you get the $HASP650 message because ‘f’ (forms) is not in the current work selection list for punch1.
5. Specifying a criterion that is not currently specified in the list adds it to the end of the list either before or after the slash, depending on the placement of the slash in the command. If the slash is omitted from the command, JES2 assumes that the slash is at the end of the command.
6. For all exact match criteria, if the output matches the device for a specific criterion, but the output specifies demand (DMND) setup, the match is not considered an exact match and the output is not selected because demand setup indicates that the characteristics do not remain the same throughout the output group.

   To print demand (DMND) setup output, the work selection criteria specified for the punch that is referenced by DMND must be removed from the list.
7. If the device is a remote punch, route code (R=) must be in the work selection list.
8. In general, the smaller the work selection list the less the placement of certain criteria within the list affects the work selection. Job output elements are queued to the class queues by route code, then priority. This information should be used to tune the work selection list to optimize performance.

Authority Required

This command requires **device** and **system** authority. The description of the $T RDRnn command explains how to ensure the proper MVS system command group authority is assigned.

This command requires **update** security access authority. For a description of assigning command input authority, see *z/OS JES2 Initialization and Tuning Guide*.

Processing Considerations

- This command is valid only when the specified punch is inactive. If the punch is active, enter a $P PUNnn command and wait for it to become inactive before entering the $T command.
- If you are uncertain of the controls in effect, enter the $D U command for the punch in question.

Scope

Single Member. This command will be in effect for this member only. There is no need to have this command issued to all members of the MAS.

Messages

The $HASP603 message displays the status of the specified punch and its current characteristics. In particular,

The $HASP003 rc=65 message indicates that the device type specified through the UNIT= parameter does not match the defined JES2 device information.

The $HASP003 rc=66 message indicates that the device type specified through the UNIT= parameter does not exist.

Examples

Because of the number of examples presented and the length of the resulting message, $HASP603 is shown only for the first example.

1 `$t pun1,f=12345678,prmode=line,lim=2000-3000,ws=(f,pmd,lim)`

```
$HASP603 PUN1      UNIT=000D,STATUS=DRAINED,CKPTLINE=1,
$HASP603           CKPTPAGE=100,CREATOR=,FORMS=12345678,
$HASP603           JOBNAME=,LIMIT=(2000,3000),PAUSE=NO,
$HASP603           PRMODE=(LINE),QUEUE=BK,RANGE=(J1,32767),
$HASP603           ROUTECDE=(LOCAL),SEP=YES,SEPDS=NO,SETUP=HALT,
$HASP603           TRACE=NO,VOLUME=(,,,),WRITER=,
$HASP603           WS=(W,Q,R,F,PRM,LIM/)
```

JES2 loads the forms numbered 12345678 into punch 1. Punch 1 now selects only those data sets that require forms numbered 12345678, specify a PRMODE of LINES, and have at least 2000 records (but no more than 3000 records).

2 The current work selection list for punch 1 is:

`WS=(w,q,r,pmd,lim/f,p)`

To remove **w** from the list, enter: **$tpun1,ws=(-w)** and the result is:

`WS=(q,r,pmd,lim/f,p)`

To move **pmd** after the slash and switch the positions of **q** and **r**, enter:

$t pun1,ws=(r,q,lim/pmd) and the result is:

`WS=(w,r,q,lim/f,p,pmd)`

3 `$t pun4,q=akz,r=(u1,r4),ws=(q,r/)`

Punch 4 processes all output in classes A, K, Z, (in that order) that was to be routed to either the local device with routing set to 1 or RJE workstation 4.

4 `$t pun4,ckptline=80,ckptpage=100,setup=nohalt`

JES2 takes output checkpoints on punch 4 every 100 logical pages, each page consisting of 80 lines. SETUP=NOHALT specifies that punch 4 does not halt and issue the $HASP190 message if a job's output specifications do not match those of punch 4.

5 `$t pun3,sepds=y,p=y,writer=write3`

JES2 assigns a writer name of WRITE3 to punch 3. This punch places separator cards between each data set within an output group and pauses between each output group.

6 `$t r8.pu2,tr=y`

JES2 traces the logic of the JES2 processor associated with remote punch 2 at RJE workstation 8.

7 `$t r3.pu1,comp=y`

JES2 provides compression and expansion capabilities for data transmitted to remote punch 1 at RJE workstation 3.

Table 56. Punch Work Selection Criteria

CRITERION	BEFORE SLASH (/)	AFTER SLASH (/)
CReator	The output group's CReator specification must match the CReator specification of the printer. Otherwise, this output group is not considered selectable.	It is not required that the CReator= specification of the output group match the CReator= specification of the printer. However, JES2 issues the $HASP190 setup message if a difference exists.
Forms	The output group's FORMS specification must match the current FORMS (F=) specification for the output device. Otherwise the output group is not selected.	It is not required that the output group match the FORMS (F=) specification for the output device. However, JES2 issues the $HASP setup message if a difference exists.
JOBname	The output group's jobname must match the jobname specified (JOBNAME=) for this device.	It is not required that the job name of the output group match the job name specified (JOBNAME=) for this device. JES2 attempts to consecutively select all eligible output for a particular job.
LIMit	The amount of output generated by an output group must fall within the limits (LIM=) set for this device. Otherwise, the output is not selected.	It is not required that the amount of output generated by the output group fall within the limits (LIM=).
{PMD|PRMode} (process mode)	The output group's process mode must match one of the process modes (PRMODE=) specified for the output device. Otherwise the output group is not selected. If there are multiple PRMODEs, the list is considered to be in priority sequence with the highest priority given to the first PRMODE in the list.	The process mode of the output group must match the process mode (PRMODE=) specified for the output device, but if there are multiple PRMODEs, the list is not in priority sequence.

Table 56. Punch Work Selection Criteria (continued)

CRITERION	BEFORE SLASH (/)	AFTER SLASH (/)
Priority	The priority of the output group is considered. Whether specified before or after the slash, higher priority output groups are preferred. Placement of 'P' in the WS list gives priority importance in the work selection process. There is no 'matching' done for priority. **Note:** Output groups are added to the class queues in priority order, and the class queues are scanned in the device's class list order. The output groups are not scanned by priority order across class queues. Thus if all other work selection criteria for the output groups are equal, all of the output groups for the first class in the device's class list are selected in priority order before the output groups for the second class in the list. This is the selection order even if higher priority output groups exist on the class queue for the second class in the device's list.	Same as before slash.
Queue	When Queue is specified in the WS list, only those output classes specified for this device are searched for work. Otherwise all classes (A-Z and 0-9) are searched. It is therefore suggested that 'Q' always be included in the WS list. The sequence of the list is the order of search.	The output classes specified for this device are not in priority sequence. All classes are equally preferred. Output groups in the first class in the list are selected first if they meet all other requirements.
Routecde	The output group's destination must match the route code (R=) specified for this device. Otherwise the output group is not selected. If there are multiple route codes specified for the device, the list is considered to be in priority sequence and a match with the first route code is preferred.	The destination of the output group must match the route code (R=) specified for this device, but if there are multiple route codes, the list is not considered to be in priority sequence.
RANGE	The job number of the job associated with the output group must be within the range (RANGE=) specified for this device.	It is not required that the job number of the job associated with the output group be within the specified range (RANGE=).
Volume	The volume of the job associated with this output group must match the volume (VOLUME=) specified for this device. If there are multiple volumes specified, the list is considered to be in priority sequence with the leftmost volume having the highest priority.	The volume of the job associated with this output group must match the volume (VOLUME=) specified for this device but if there are multiple volumes specified, the list is not considered to be in priority sequence.
Writer	The writer name specified for the output group must match the writer name specified (W=) for this device, otherwise the output group is not selected.	It is not required that the writer name of the output group match the writer name (W=) specified for the device.

$T RDRnn and $T Rnnnn.RDm - Control a Reader

Function

- To assign command authority for the specified reader.
- To specify default routing, affinities, job and message classes for jobs read by the specified reader.
- To hold all jobs read by the specified reader.
- To start or stop tracing of the JES2 processor associated with the specified reader.

Syntax

```
►►─$T──┬─RDR────┬──┬─nn──┬──────┬──┬──────────────────────────────────────────────┬──►
       └─READER─┘  │     └─-─┬─nn─┬┘  │                                              │
                   │         └─*──┘   │  ┌─ Selection limiting keywords ─┐           │
                   │  ┌──────────────┐│  │                               │           │
                   │  ▼              │└──┘                               └───────────┘
                   └─(──┬─nn─┬──┬──┬──┬──┬──┬──────┬──┬─nn─┬──)──┘
                        └─*──┘  │  │  │  │  └─-─┬─nn─┬┘  │
                                │  │  │  │      └─*──┘   │
                                │  │  │  │               │
                                │  │  │  │               │
                                │  │  │  │               
```

Selection limiting keywords:

```
├──┬──────────────
```

reader has no specific command authority, and the indicated reader honors only those few commands requiring no authority (for example, display commands).

2. Network authority requires having system, job, or device authority *in addition to* network authority to have system, job, or device commands take effect at another reader.
3. This parameter is not valid for remote readers.

Class=class
The default execution class (A-Z, 0-9) for jobs that are read by the specified reader and that do not have a job class specified on the JOB statement. If you specify this parameter, the command requires device authority.

HOLD=[No|Yes]
Specifies whether or not all jobs read by the specified reader are to be held after JCL conversion. You can release these jobs on an individual basis using the $A command.

Note: In an NJE environment, if a job contains a /*ROUTE XEQ or /*XEQ JES2 control statement specifying another node for execution, the job is not held at the entry node, but at the execution node (that is, the node which performs the JCL conversion).

MSGclass|Q=v
The 1 character job execution class (A-Z,0-9) for jobs submitted through the specified reader with no specified job execution class.

PRIOINC={0|n}
Specifies a number (0-15) to be added to the selection priority of each job entered at this card number.

PRIOLIM={15|n}
Specifies the maximum priority level (0-15) that can be assigned to jobs entered at this card reader. Any job's priority that exceeds this level will be reduced to it.

P|PRTDEST=prtdest
Specifies the default destination for the print output from all jobs that are read by the specified reader and that do not have a /*ROUTE statement or DEST parameter. The value for all routing numbers can range from 1 to 32767. For specification requirements, see "Route Codes" on page 92.

Note: NODENAME=REQUIRED on the DESTDEF initialization statement will cause JES2 to require that a userid be prefixed with a node name.

The valid destinations are:

LOCAL|ANYLOCAL
Indicates that jobs are to be run at the local node.

Nnnnn|nodename
Indicates that jobs are to be run at the specified node(s). You can specify a node using the decimal node identifier or an EBCDIC nodename.

destid Indicates that jobs are to be run at the specified node(s). You can specify this location by an alias for the name of a node. If destid is specified alone, it refers to both the node and the remote.

NnnnnRmmmm|node.remote|node.userid
Indicates routing to the remote Rmmmm at the node Nnnnn. Rmmmm can also be specified as RMmmmm or RMTmmmm.

Ummmm
Indicates special local routing.

node.destid
Indicates a destination at the specified node. The destid refers to both the node and the remote. The node specified in the destid must be the same as the node portion of the route code. If the number of the remote is reassigned, you can use the destid to send to this node.

remote
Indicates routing to a remote. Remote can be specified in any of the following ways:

LOCAL|ANYLOCAL
Indicates that jobs are to be run at the local node.

Rmmmm
Indicates routing to the specified remote. Rmmmm can also be specified as RMmmmm or RMTmmmm. The value specified for mmmm can range from 1 to 32767.

destid Indicates routing to a destid referring to a remote.

PUNDEST|U=pundest
Specifies the default destination for the punch output from all jobs that are read by the specified reader and that do not have a /*ROUTE statement or DEST parameter.

Note: NODENAME=REQUIRED on the DESTDEF initialization statement will cause JES2 to require that a userid be prefixed with a node name.

S|Sysaff=
The default affinities assigned to jobs read by the specified reader.

ANY
The jobs are eligible to run on any member in the JES2 multi-access spool configuration.

+|- The subsequent IND, and/or memnames are to be added to (+) or deleted from (-) the current list of systems which are eligible to process the jobs read by the specified reader. If neither + nor - is specified, the affinities of the jobs are set explicitly to the specified systems.

Note: If you specify IND without any member names (memname), you must specify (+) or (-).

IND
The jobs are added to the list of jobs eligible to run on independent mode processors (+), deleted from the list of jobs eligible to run on independent mode processors (-), or, if neither + nor - is specified, IND affinity must be specified with a member name.

memname|*
The identifier (1 to 4 alphameric characters) of a member in the JES2 multi-access spool configuration that is added to (+), deleted from (-), or explicitly set (neither) as the affinity for jobs read by the specified reader. If you code *, the job will have affinity only for the member executing the command.

TRace={No|P|Yes}
Specifies whether tracing is to be activated or deactivated for the JES2 processor associated with the indicated reader. This parameter requires system authority.

No
Tracing is disabled.

P|Yes
Tracing is activated if trace IDs 11 and 12 are currently enabled.

Note: Trace IDs 11 and 12 may be enabled either at initialization on the TRACE(n) statement or using the $S TRACE(n) command.

RDRnn
The local reader that is affected by this command.

Rnnnn.RDm
The remote reader that is affected by this command.

Notes:

1. This parameter is not valid for remote readers.
2. A reader may not be used to set the command authority for any local reader device. The $T RDRnn,AUTH= command can be issued only by a console with device and system authority.
3. The command authorities that are set only operate on JES2 commands; they do not apply to MVS commands.

UNIT={devnum|/devnum}
Specifies a 3-digit or 4-digit hexadecimal device number. Device numbers can be specified by any of the following formats:

```
UNIT=ddd
UNIT=dddd
UNIT=/ddd
UNIT=/dddd
```

where ddd and dddd represent the device numbers.

A slash (/) can optionally precede the device number (for compatibility with other commands that require a slash to denote a 4-digit device number).

Note: This parameter is not valid for remote devices.

Xeqdest={LOCAL|name|Nnnnn}
Specifies the default execution node for all jobs that are read by the specified reader and that do not specify a /*XEQ statement. The valid node specifications are:

LOCAL
The node to which the reader is attached.

name
A node identified by an installation-defined name.

Nnnnn
A specific node whose number is nnnn.

Authority Required

This command requires **device** and **system** authority. See the **AUTH=** parameter description for information about assigning the proper MVS system command group authority. The $T INTRDR command sets the command authority for internal readers. The $T NODE(nnnn) command sets the command authority for a node.

This command requires **update** security access authority. For a description of assigning command input authority, see *z/OS JES2 Initialization and Tuning Guide*.

Scope

Single Member. This command will be in effect for this member only. There is no need to have this command issued to all members of the MAS.

Messages

The $HASP603 message displays the status of the specified reader and its current characteristics.

The $HASP003 rc=65 message indicates that the device type specified through the UNIT= parameter does not match the defined JES2 device information.

The $HASP003 rc=66 message indicates that the device type specified through the UNIT= parameter does not exist.

Examples

1 `$t rdr3,auth=(d=y,j=y),h=y,tr=y`

```
$HASP603 RDR3      UNIT=0012,STATUS=DRAINED,AUTH=(DEVICE=YES,
$HASP603           JOB=YES,SYSTEM=NO),CLASS=A,HOLD=YES,
$HASP603           MSGCLASS=A,PRIOINC=0,PRIOLIM=15,
$HASP603           PRTDEST=LOCAL,PUNDEST=LOCAL,SYSAFF=(ANY),
$HASP603           TRACE=YES,XEQDEST=LOCAL
```

JES2 assigns device and job command authority to reader 3 and activates tracing of the JES2 processor associated with reader 3. All jobs that are submitted through this reader are placed in hold status after JCL conversion until the operator releases them for execution.

2 `$t rdr1,s=(ind,sysa)`

```
$HASP603 RDR3    UNIT=000E,STATUS=DRAINED,AUTH=(DEVICE=YES,
$HASP603         JOB=YES,SYSTEM=NO),CLASS=A,HOLD=YES,
$HASP603         MSGCLASS=A,PRIOINC=0,PRIOLIM=15,
$HASP603         PRTDEST=LOCAL,PUNDEST=LOCAL,SYSAFF=(IND,
$HASP603         SYSA),TRACE=YES,XEQDEST=LOCAL
```

All jobs read by reader 1 are eligible to run only on SYSA, but only if SYSA is operating in an independent mode.

3 `$t rdr2,c=d,q=a,s=+sysa`

```
$HASP603 RDR3    UNIT=0012,STATUS=DRAINED,AUTH=(DEVICE=YES,
$HASP603         JOB=YES,SYSTEM=NO),CLASS=D,HOLD=YES,
$HASP603         MSGCLASS=A,PRIOINC=0,PRIOLIM=15,
$HASP603         PRTDEST=LOCAL,PUNDEST=LOCAL,SYSAFF=(SYSA,
$HASP603         SYSB,SYSC),TRACE=YES,XEQDEST=LOCAL
```

JES2 assigns execution class D and/or message output class A to all jobs that are processed by reader 2 and that do not specify a job and/or message output class in their JCL. SYSA is added to the lists of systems that are eligible to process jobs read by reader 2.

4 `$t r1.rd1,prtdest=local,pundest=r3,xeqdest=n4`

```
$HASP603 R1.RD1 STATUS=DRAINED,CLASS=B,HOLD=NO,MSGCLASS=2,
$HASP603 PRIOINC=0,PRIOLIM=15,PRTDEST=LOCAL,
$HASP603 PUNDEST=R3,SYSAFF=(ANY),TRACE=NO,
$HASP603 XEQDEST=N4
```

$T RDRnn and $T Rnnnn.RDm

All jobs read at RJE workstation 1 reader 1 that do not specify a /*XEQ statement are routed by default to node 3 for execution. The print output of these jobs is routed by default to local devices and the punch output is routed to RJE workstation 3 off the local node.

$T RECVopts - Set JES2 Recovery Options

Function

- **For subtask and disastrous errors:**

  To specify the error rate threshold below which automatic SVC dumps are issued.
- **For JES2 main task errors:**

  To specify the error rate threshold below which the operator is not involved in the recovery process.

One or more parameters on this command accepts wildcards. Parameter descriptions will note that.

Syntax

```
►►──$T──RECVopts──┬─'type'──────────────────────┬──┬──────────────┬──┬──────────────────────┬──►◄
                  │   ┌──────────────────┐      │  └─,COUNT=nn────┘  └─,INTERVAL=nnnn───────┘
                  │   ▼ ,                │      │
                  └─(────┬─type──────┬────)─────┘
                         └─'type'────┘
```

Parameters

{type|*}

Specifies the type of recovery errors for which the operator does not receive the $HASP070 message.

You also can specify wildcards for the recovery error type. See “Using Wildcards” on page 93 for additional information.

If you specify **(*)**, JES2 suppresses the $HASP070 message for **all** types of recovery errors. The valid **types** and their meanings are:

ALLOCATE	Allocation subtask errors
CKPTVRNS	APPLCOPY/CKPTVRNS subtask errors
CKPTONCF	Checkpoint on CF subtask errors
CKPT	Checkpoint errors
CONVERT	JCL conversion subtask errors
DISTERR	Disastrous errors
GENERAL	Generalized subtask recovery errors
IMAGE	Image subtask errors
MAIN	JES2 main task errors (catastrophic and abends)
OFFLOAD	Offload subtask errors
PQE	Print/punch queue error
SMF	SMF subtask errors
SPOOL	Spool subtask errors
VTAM	VTAM subtask errors
WTO	WTO subtask errors

COUNT=nn

If the **type** is MAIN, COUNT= specifies the number (1-99) of errors permitted to occur within the specified time interval at which the operator becomes involved in the recovery process. For example, COUNT=2 indicates that the operator becomes involved in the recovery process when the second error occurs.

For other error types, COUNT= specifies the number of errors permitted to occur in the specified time interval at which automatic SVC dumps are no longer issued. For example, if a single automatic dump is desired, specify COUNT=2.

INTERVAL=nnnn
The time interval, in hours (1-9999), in which JES2 counts errors of the specified type. If a number is not specified, INTERVAL defaults to 24.

Note: If you change the value of this parameter, JES2 resets the cumulative error counter used for recovery/diagnostic processing to zero.

Authority Required

This command requires **system** authority. The description of the $T RDRnn command explains how to ensure the proper MVS system command group authority is assigned.

This command requires **control** security access authority. For a description of assigning command input authority, see *z/OS JES2 Initialization and Tuning Guide*.

Scope

Single Member. This command will be in effect for this member only.

Depending on your installation's setup, however, you might want this command to be applied to all members of the MAS (to ensure a consistent environment across the MAS). If so, you can use the MVS ROUTE *ALL command to issue this command to all active members (if the JES2 command character is the same on all members). See *z/OS MVS System Commands* for more information on using the ROUTE *ALL command.

Messages

The $HASP846 message displays the current values of all the parameters on the RECVOPTS initialization statement.

Examples

1
```
$t recvopts(main),count=3,interval=24
```

```
$HASP846 RECVOPTS(MAIN) COUNT=3,INTERVAL=24
```

If three JES2 main task errors occur within a 24 hour time period, the operator becomes involved in the recovery process at the time of the third error.

2
```
$t recvopts(disterr),count=2,interval=48
```

```
$HASP846 RECVOPTS(DISTERR) COUNT=2,INTERVAL=48
```

JES2 issues an automatic SVC dump only for the first disastrous error that occurs in a 48 hour time period. The $HASP096 message indicates the csect in which the error occurred. For subsequent errors, JES2 issues the $HASP096 message but does not issue a dump.

$T REDIRect - Redirect Command Responses

Function

To change redirection for commands entered at the entry console. The operator should use $T REDIRect if redirection was specified already via the redirect initialization statement or a previous $ADD REDIRect for this console.

In a sysplex, if a JES2 subsystem has SCOPE=SYSTEM on its CONDEF initialization statement, redirection will not be in effect for that subsystem. To have that subsystem take part in the redirection, issue the $T or $ADD REDIRect command on that JES2 subsystem.

Syntax

```
►►──$T──REDIRect──┬─nn──┬──────────┬──┬──────────────────────────────────────►
                  │     └─-──┬─mm─┬─┘  │ └─,DA=da─┘ └─,DCONNECT=dconnect─┘ └─,DEF=def─┘
                  │          └─*──┘    │
                  ├─'redirect'─────────┤
                  │      ┌──,──────────┐│
                  │      ▼             │
                  └─(────┬─nn─┬──┬──────┬──┬─)─┘
                         │ └─*─┘  └─-──┬─mm─┬─┘
                         │             └─*──┘
                         ├─redirect──────┤
                         └─'redirect'────┘

►──┬─,DF=df─┘ └─,DI=di─┘ └─,──┬─DJ─┬─=dj─┘ └─,DN=dn─┘ └─,DNODE=dnode─┘ └─,DQ=dq─┘ └─,DSPL=dspl─┘
                             ├─DS─┤
                             └─DT─┘

►──┬─,DU=du─┘ └─,──┬─LJ─┬─=lj─┘──────────────────────────────────────────────►◄
                   ├─LS─┤
                   └─LT─┘
```

Parameters

***** Specifies all entry consoles that have been added or redirected at initialization as the active MCS console. This parameter resets the response locations for the indicated command groups.

DA=da
Display active job.

DCONNECT=dconnect
Display JES2 network connections.

DEF=def
Display JES2 parameter definitions.

DF=df
Display forms queue.

DI=di
Display initiators.

DJ|DS|DT=dj
Display JOB, STC, TSU information.

DN=dn
Display queued jobs.

DNODE=dnode
Display NJE nodes.

DQ=dq
Display number of queued jobs.

DSPL=dspl
Display spool volumes.

DU=du
Display units.

LJ|LS|LT=lj
List JOB, STC, TSU output.

nn Specifies the active MCS console. If you enter any redirect commands from the active console, it displays the output of all redirecting commands and identifies the console(s) to which their responses are directed. This parameter must include a console id or console name defined at initialization. Do not specify a console area.

redirect
Specifies the active MCS console at which the specified output appears. If you only specify an area, the output appears in the indicated area of the entry_console. If area is omitted, then the default area defined on the CONDEF RDIRAREA= operand is used. This parameter is required. Con_spec may be defined as follows:

a An output area ID
cc A two digit console ID
cca A two digit console ID with an output area ID
name A symbolic console name
name-a
A symbolic console name

Authority Required

This command requires **system** authority. The description of the $T RDRnn command explains how to ensure the proper MVS system command group authority is assigned.

This command requires **control** security access authority. For a description of assigning command input authority, see *z/OS JES2 Initialization and Tuning Guide*.

Scope

Single Member. This command will be in effect for this member only. There is no need to have this command issued to all members of the MAS.

Messages

The $HASP818 message is issued in response to this command. The $HASP003 rc=52 message is issued if a $T REDIRECT is entered for this console before an initial redirection is specified for this console. The $HASP0003 rc=62 message is issued if a $T REDIRECT is entered to set redirection to an invalid console.

Examples

1 `$t redir(cn3e0),du=cn320`

Sets up redirection for the $du command so that when you issue a $du on console CN3E0, the response is displayed on console CN320.

2 `$t redir(cn320),du=cn3e0-a`

Sets up redirection for the $du command so that when this command is issued on console CN320, the response is displayed in the out-of-line area A of console CN3E0.

3 `$t redir(cn3e0),di=a,du=a`

Sets up redirection for the $di and the $du commands. When you issue these commands on console CN3E0, the responses are displayed in the out-of-line area A of console CN3E0.

$T RMT(nn) - Change an RJE Workstation

Function

To specify characteristics for one or more RJE workstations.

This command can be used to add BSC and SNA RJE workstations.

Not all parameters are applicable to each type of workstation. The parameter descriptions indicate applicability to each type and differences as appropriate. Parameters applicable to BSC-only and SNA-only workstations are listed here.

Parameters applicable to **BSC RJE workstations only**:
- BLOCK=
- BUFEXPAN=
- HTABS=
- MFORM=
- MRF2780=
- MULTILV=
- RECFM=
- SHARABLE=
- TRANSPAR=

Parameters applicable to **SNA RJE workstations only**:
- Autolog=
- COMPACT=
- LUNAME=
- SETUP=

Most of the parameter specifications that can be changed on this command require that the RJE workstation be inactive. Issue the $D ACTRMT(nn) command to obtain status of active RJE workstations prior to issuing the $T RMT(nn) command.

Syntax

```
►►─$T─RMT─┬─nn─┬──────┬─────────────────────────────────────────────────────────►
          │    └─-─┬─mm─┬─┘                                                      │
          │        └─*─┘                                                        │
          │   ┌──────────────────────────────────────────┐                      │
          │   ▼                                          │                      │
          └─(─────┬─nn─┬──────┬──────────────────────────)─┘                      │
                  │    └─*─┘  │                                                  │
                  │           └─-─┬─mm─┬─┘                                        │
                  │               └─*─┘                                          │
  ┌─ Selection limiting keywords ─┐
  └──────────────────────────────┘

►─┬─────────────────────────────┬──────────────────────────────────────────────►◄
  │ Modification keywords       │
  └─────────────────────────────┘
```

Modification keywords:

```
├─┬──────────────────────────────┬─┬──────────────────────────┬─┬──────────────────────────┬─┬──────────────────────────────────────►
  │ ,Autolog=──┬─No──┬──────────┬─┬─ ,BLOCK=──┬─No──┬──────────┬─┬─ ,BUFEXPAN=──┬─0──┬──────────┬─┬─ ,BUFSIZE=bufsize──────────────┬
  │            └─Yes─┘          │ │           └─Yes─┘          │ │              ├─1──┤          │ │                                │
  │                             │ │                            │ │              └─2──┘          │ │                                │

►─┬──────────────────────────────┬─┬──────────────────────────┬─┬──────────────────────────┬─┬──────────────────────────┬──────►◄
  │ ,COMPACT=──┬─No──┬──────────┬─┬─ ,COMPRESS=──┬─No──┬──────────┬─┬─ ,CONDEST=condest──────┬─┬─ ,CONS=──┬─No──┬──────────┬─┬
  │            └─Yes─┘          │ │              └─Yes─┘          │ │                        │ │          └─Yes─┘          │ │
```

```
►──┬──────────────────────────────────────────────────────────────────────────────────────────────────────────────────►
   │ ,DEVTYPE=──┬─AS/400──────┬  ┌ ,Discintv=discintv┐  ┌ ,HTABS=──┬─No──┬┐  ┌ ,LINE=line┐
   │            ├─AS400───────┤  └──────────────────┘  │          └─Yes─┘│  └──────────┘
   │            ├─LUTYPE1─────┤                         └─────────────────┘
   │            ├─M20-2───────┤
   │            ├─M20-4───────┤
   │            ├─M20-5───────┤
   │            ├─M20-6───────┤
   │            ├─S/3─────────┤
   │            ├─S/36────────┤
   │            ├─S/360───────┤
   │            ├─S/370───────┤
   │            ├─SYSTEM/3────┤
   │            ├─SYSTEM/36───┤
   │            ├─SYSTEM3─────┤
   │            ├─SYSTEM36────┤
   │            ├─S360────────┤
   │            ├─S370────────┤
   │            ├─1130────────┤
   │            ├─2770────────┤
   │            ├─2780────────┤
   │            ├─2922────────┤
   │            ├─3740────────┤
   │            ├─3780────────┤
   │            └─3781────────┘

►──┬──────────────────────────────────────────────────────────────────────────────────────────────────────────────────►
   │ ,LOCAL190=──┬─ACTION─┬┐  ┌ ,LOGON=logon┐  ┌ ,LUNAME=luname┐  ┌ ,MFORM=──┬─J─┬┐
   │             └─INFO───┘│  └─────────────┘  └───────────────┘  │          ├─M─┤│
   │                       │                                      │          └─T─┘│
   │                       │                                      └───────────────┘

►──┬──────────────────────────────────────────────────────────────────────────────────────────────────────────────────►
   │ ,MRF2780=──┬─No──┬┐  ┌ ,MSGPRT=──┬─No──┬┐
   │            └─Yes─┘│  │           └─Yes─┘│
   │                   │  └──────────────────┘

►──┬──────────────────────────────────────────────────────────────────────────────────────────────────────────────────►
   │ ,MULTILV=──┬─No──┬┐  ┌ ,NUMPRt=numprt┐  ┌ ,NUMPUn=numpun┐  ┌ ,NUMRDr=numrdr┐
   │            └─Yes─┘│  └───────────────┘  └───────────────┘  └───────────────┘

►──┬──────────────────────────────────────────────────────────────────────────────────────────────────────────────────►
   │ ,Password=password┐  ┌ ,RECFM=──┬─FIXED────┬┐  ┌ ,RMT150=──┬─No──┬┐  ┌ ,Routecde=routecde┐
   └──────────────────┘  │          └─VARIABLE─┘│  │           └─Yes─┘│  └────────────────────┘
                         └──────────────────────┘  └──────────────────┘

►──┬──────────────────────────────────────────────────────────────────────────────────────────────────────────────────┤
   │ ,SETUP=──┬─MSG──┬┐  ┌ ,──┬─SHARable──┬──=──┬─No──┬┐  ┌ ,TRANSPAR=──┬─No──┬┐  ┌ ,WAITIME=waitime┐
   │          └─PDIR─┘│  │    └─SHAREable─┘     └─Yes─┘│  │             └─Yes─┘│  └──────────────────┘
   │                  │  └────────────────────────────┘  └────────────────────┘
```

Selection limiting keywords:

```
├──┬──────────────────────────────────────────────────────────────────────────────────────────────────────────────────►
   │ ,──/──Autolog──┬─=──┬──┬─No──┬┐  ┌ ,──/──BLOCK──┬─=──┬──┬─No──┬┐
   │                └─^=─┘  └─Yes─┘│  │              └─^=─┘  └─Yes─┘│
   │                               │  └─────────────────────────────┘

►──┬──────────────────────────────────────────────────────────────────────────────────────────────────────────────────┤
   │ ,──/──COMPACT──┬─=──┬──┬─No──┬┐  ┌ ,──/──COMPRESS──┬─=──┬──┬─No──┬┐
   │                └─^=─┘  └─Yes─┘│  │                 └─^=─┘  └─Yes─┘│
   │                               │  └────────────────────────────────┘

├──┬──────────────────────────────────────────────────────────────────────────────────────────────────────────────────►
   │ ,──/──CONDEST──┬─=──┬──┬─condest┐  ┌ ,──/──CONS──┬─=──┬──┬─No──┬┐
   │                ├─^=─┤  └────────┘  │             └─^=─┘  └─Yes─┘│
   │                ├─>──┤               └────────────────────────────┘
   │                └─<──┘
```

$T RMT(nn)

```
►──┬──────────────────────────────────────────────────────────────────────────────────────────────────────────────────────────────►
   │ ,──/──DEVTYPE──┬─=──┬──┬─AS/400──────┬│ │ ,──/──HTABS──┬─=──┬──┬─No──┬│
   │                │ ^= │  ├─AS400───────┤│ │              │ ^= │  └─Yes─┘│
   │                │    │  ├─LUTYPE1─────┤│ │              │    │         │
   │                │    │  ├─M20-2───────┤│ │              │    │         │
   │                │    │  ├─M20-4───────┤│ │              │    │         │
   │                │    │  ├─M20-5───────┤│ │              │    │         │
   │                │    │  ├─M20-6───────┤│ │              │    │         │
   │                │    │  ├─S/3─────────┤│ │              │    │         │
   │                │    │  ├─S/36────────┤│ │              │    │         │
   │                │    │  ├─S/360───────┤│ │              │    │         │
   │                │    │  ├─S/370───────┤│ │              │    │         │
   │                │    │  ├─SYSTEM/3────┤│ │              │    │         │
   │                │    │  ├─SYSTEM/36───┤│ │              │    │         │
   │                │    │  ├─SYSTEM3─────┤│ │              │    │         │
   │                │    │  ├─SYSTEM36────┤│ │              │    │         │
   │                │    │  ├─S360────────┤│ │              │    │         │
   │                │    │  ├─S370────────┤│ │              │    │         │
   │                │    │  ├─1130────────┤│ │              │    │         │
   │                │    │  ├─2770────────┤│ │              │    │         │
   │                │    │  ├─2780────────┤│ │              │    │         │
   │                │    │  ├─2922────────┤│ │              │    │         │
   │                │    │  ├─3740────────┤│ │              │    │         │
   │                │    │  ├─3780────────┤│ │              │    │         │
   │                │    │  └─3781────────┘│ │              │    │         │
```

```
►──┬──────────────────────────────────────────────────────────────────────────────────────────────────────────────────────────────►
   │ ,──/──LINE──┬─=──┬─line─┬│ │ ,──/──LOCAL190──┬─=──┬──┬─ACTION─┬│ │ ,──/──LOGON──┬─=──┬─logon─┬│
   │             │ ^= │      │ │                 │ ^= │  └─INFO───┘│ │              │ ^= │       │ │
   │             │ >  │      │ │                 │    │            │ │              │ >  │       │ │
   │             │ <  │      │ │                 │    │            │ │              │ <  │       │ │
```

```
►──┬──────────────────────────────────────────────────────────────────────────────────────────────────────────────────────────────►
   │ ,──/──LUNAME──┬─=──┬─luname─┬│ │ ,──/──MFORM──┬─=──┬──┬─J─┬│ │ ,──/──MRF2780──┬─=──┬──┬─No──┬│
   │               │ ^= │        │ │              │ ^= │  ├─M─┤│ │                │ ^= │  └─Yes─┘│
   │               │ >  │        │ │              │    │  └─T─┘│ │                │    │         │
   │               │ <  │        │ │              │    │       │ │                │    │         │
```

```
►──┬──────────────────────────────────────────────────────────────────────────────────────────────────────────────────────────────►
   │ ,──/──MSGPRT──┬─=──┬──┬─No──┬│ │ ,──/──MULTILV──┬─=──┬──┬─No──┬│
   │               │ ^= │  └─Yes─┘│ │                │ ^= │  └─Yes─┘│
```

```
►──┬──────────────────────────────────────────────────────────────────────────────────────────────────────────────────────────────►
   │ ,──/──NUMPRt──┬─=──┬─numprt─┬│ │ ,──/──NUMPUn──┬─=──┬─numpun─┬│ │ ,──/──NUMRDr──┬─=──┬─numrdr─┬│
   │               │ ^= │        │ │               │ ^= │        │ │               │ ^= │        │ │
   │               │ >  │        │ │               │ >  │        │ │               │ >  │        │ │
   │               │ <  │        │ │               │ <  │        │ │               │ <  │        │ │
```

```
►──┬──────────────────────────────────────────────────────────────────────────────────────────────────────────────────────────────►
   │ ,──/──RECFM──┬─=──┬──┬─FIXED────┬│ │ ,──/──RMT150──┬─=──┬──┬─No──┬│
   │              │ ^= │  └─VARIABLE─┘│ │               │ ^= │  └─Yes─┘│
```

```
►──┬──────────────────────────────────────────────────────────────────────────────────────────────────────────────────────────────►
   │ ,──/──Routecde──┬─=──┬─routecde─┬│
   │                 │ ^= │          │ │
   │                 │ >  │          │ │
   │                 │ <  │          │ │
```

```
►──┬──────────────────────────────────────────────────────────────────────────────────────────────────────────────────────────────►
   │ ,──/──SETUP──┬─=──┬──┬─MSG──┬│ │ ,──┬──/──SHARable──┬─=──┬──┬─No──┬│
   │              │ ^= │  └─PDIR─┘│ │    └──/──SHAREable─┘ │ ^= │  └─Yes─┘│
```

```
►──┬──────────────────────────────────────────────────────────────────────────────────────────────────────────────────────────────┤
   │ ,──/──TRANSPAR──┬─=──┬──┬─No──┬│ │ ,──/──WAITIME──┬─=──┬─waitime─┬│
   │                 │ ^= │  └─Yes─┘│ │                │ ^= │         │ │
   │                 │ >  │         │ │                │ >  │         │ │
   │                 │ <  │         │ │                │ <  │         │ │
```

Parameters

Autolog={No|Yes}

For SNA RJE workstations only, specifies whether or not the SNA RJE workstation can be automatically connected (logged on) when output (print/punch) or messages are queued for transmission to the RJE workstation. The RJE workstation is allowed to log on only if:

- This command also specifies a logical unit name through the LUNAME= parameter on the corresponding RMTnn initialization statement.
- A JES2 line has been started and is available.
- The maximum number of sessions specified at initialization (with the SESSIONS parameter on the TPDEF statement) has not been exceeded.

BLOCK={No|Yes}

For BSC RJE workstations only, specifies whether or not this workstation has a blocked (YES) or unblocked (NO) data record format.

Note: You can change the value of this parameter only when the RJE workstation is inactive.

BUFEXPAN= {0|1|2}

For BSC 2770 RJE workstations only specifies whether or not this 2770 terminal has a buffer-expansion feature.

0 This terminal does not have the buffer-expansion feature.

1 This terminal has the buffer-expansion feature and implies an RJE workstation buffer of 264 bytes.

2 This terminal has the additional buffer-expansion feature and implies an RJE workstation buffer of 520 bytes.

Notes:

1. You can change the value of this parameter only when the RJE workstation is inactive.
2. If an attached printer has a PRWIDTH= parameter greater than 120 bytes, specify BUFEXPAN=1 or 2.

BUFSIZE=bufsize

For BSC RJE workstations, specifies the largest buffer (127 to the BELOWBUF=(SIZE=) parameter value on the TPDEF initialization statement) that can be either sent from or received by this workstation.

BUFSIZE= enforces minimum buffer size specification based on device type for BSC RJE workstations.

For SNA RJE workstations, specifies the largest buffer (256 to the EXTBUF=(SIZE=) parameter value on the TPDEF initialization statement) that can be either sent from or received by this SNA RJE workstation.

The following table provides the minimum buffer size requirements for various RJE workstation types. If you specify a value less than that listed here, JES2 increases BUFSIZE= to this minimum value.

Table 57. JES2 BUFSIZE Minimum Buffer Size Requirements for RJE Workstations

Workstation	Type	BUFSIZE Value
SNA	N/A	256

Table 57. JES2 BUFSIZE Minimum Buffer Size Requirements for RJE Workstations (continued)

Workstation	Type	BUFSIZE Value
Multileaving Terminals and Systems	N/A	MBUFSIZE= value on TPDEF statement
Hardware Terminal	2770 without buffer expansion (BUFEXPAN=0)	127
Hardware Terminal	2770 with buffer expansion (BUFEXPAN=1)	264
Hardware Terminal	2770 with additional buffer expansion (BUFEXPAN=2)	520
Hardware Terminal	2780	400
Hardware Terminal	3780	520
Hardware Terminal	3781	520

Note: You can change the value of this parameter only when the RJE workstation is inactive.

COMPACT={No|Yes}
For SNA RJE workstations only, specifies whether (YES) or not (NO) this RJE workstation or terminal allows JES2 to send a compaction table for use with a printer or punch data set.

Use the COMPACT initialization statement to define compaction tables. If more than one session is active and COMPACT=YES, all sessions are eligible to receive a compaction table.

Note: You can change the value of this parameter only when the RJE workstation is inactive.

COMPRESS={No|Yes}
Specifies whether (YES) or not (NO) this RJE workstation uses the compression/expansion feature.

For BSC RJE (2770 and 3780) workstations, if COMPRESS=YES is specified on both the LINE(nn) initialization statement and the remote device (print, punch, and reader) initialization statement (R(nn).XXm), the COMPRESS= parameter on this command determines whether JES2 uses the compression/expansion feature. If you specify COMPRESS=YES, JES2 forces HTABS=NO.

If COMPRESS=NO on the LINE(nn) statement, JES2 ignores this parameter.

For SNA RJE workstations, if COMPACT=YES is specified, JES2 forces compression.

Note: You can change the value of this parameter only when the RJE workstation is inactive.

CONDEST=condest
The route code (1 to the value of RMTNUM= on the TPDEF initialization

statement) that is used for responses to commands entered from this RJE workstation. The value specified should be the number of a defined RJE workstation.

CONS={No|Yes}
Specifies whether (YES) or not (NO) this RJE workstation has an operator console or is simulating an operator console through the &PRTCONS RMT generation statement.

For SNA RJE workstations, you should specify this parameter only if the RJE workstation has an operator console.

If JES2 determines that this RJE workstation cannot have a console, it forces CONS=NO.

Note: You can change the value of this parameter only when the RJE workstation is inactive.

DEVTYPE={type}
Specifies the type of processor at this RJE workstation.

The following types apply:

LUTYPE1
For SNA RJE workstations, specifies that the workstation can be accessed only through a logical line. If DEVTYPE= is changed to a valid value other than LUTYPE1, this SNA remote workstation will be changed to a BSC remote workstations.

2770|2780|3780|3781
For BSC RJE workstations, specifies a hardware terminal.

2922|M20-2|M20-4|M20-5|M20-6
For BSC RJE workstations, specifies a multileaving workstation.

AS/400|S/36|S/360|S/370|S/3
For BSC RJE workstations, specifies a system.

Notes:

1. If you define a workstation that is not explicitly supported by JES2 but does emulate one of the types listed above, consult the documentation for that terminal so you set characteristics (such as buffer sizes) appropriately.
2. To ensure that punch output is directed to the proper device, specify ‘3781’ to define remote 3780 terminals that contain punches.
3. You can change the value of this parameter only when the RJE workstation is inactive.
4. Changing this parameter to a different type (particularly between BSC and SNA types) causes certain restrictions on other parameters (such as BUFSIZE=). Review carefully all parameters to ensure that this command is valid. For further information concerning parameter requirements for the RMT(nn) statement, refer to *z/OS JES2 Initialization and Tuning Reference*.

Discintv=discintv
For BSC RJE workstations, specifies the time interval in seconds (0 to 8160) after which, if there has been no successful text transmission in either direction, JES2 disconnects this RJE workstation from the processing unit.

For SNA RJE workstations, specifies the *maximum* interval in seconds (0 to 8160) after which, if there has been no successful text transmission in either direction, JES2 ends the session between the SNA RJE workstation and the processing unit.

- JES2 rounds this value to the next highest multiple of 32.
- 0 indicates that this terminal is not to be disconnected
- Error recovery tries and idle time do not count as successful text transmission.
- If automatic disconnect is not specified, the remote terminal remains connected until the operator signs it off.

HTABS={No|Yes}
For BSC RJE workstations only, specifies whether (YES) or not (NO) this 2770 or 2780 terminal has the horizontal format-control feature.

If you specify COMPRESS=YES, this parameter is forced to HTABS=NO.

Note: You can change the value of this parameter only when the RJE workstation is inactive.

LINE=line
Specifies the number (0-32767) of the teleprocessing (BSC) or logical (SNA) line that are both connected and **dedicated** to this terminal.

For BSC RJE workstations, if you specify LINE=0, JES2 provides a **nondedicated** RJE workstation, which can use any **nondedicated** BSC line that requires a /*SIGNON JCL statement to start.

For SNA RJE workstations, if you specify LINE=0, JES2 provides a **nondedicated** RJE workstation, which can use any **nondedicated** SNA line. If you specify LINE= as a value other than 0, you must also specify the UNIT=SNA parameter on the LINE(nn) initialization statement.

Note: You can change the value of this parameter only when the RJE workstation is inactive.

LOCAL190={ACTION|INFO}
Specifies the type of operator setup messages ($HASP190) that JES2 issues at the local processor console for this RJE workstation. If you do not specify this parameter, JES2 provides a default of ACTION.

ACTION
Specifies that operator setup messages issued at the local console for this remote device are **action messages** (messages that require an operator action to delete them from the console).

INFO
Specifies operator setup messages issued at the local console for this remote device as **information messages** (messages that do not require an operator action to delete them from the console).

LOGON=logon
Specifies the number (1-999) of the local LOGON DCT which should be used when specifying connections to the application. The default value of 0 indicates that the LOGON DCT defined with the lowest number is to be used.

LUNAME=luname
For SNA RJE workstations only, specifies the logical unit name of this RJE workstation or terminal. If you specify this parameter, it must match the name defined to VTAM at system initialization in SYS1.VTAMLST.

If you use the automatic logon capability (Autolog=YES), you must specify an LUNAME= value. If the logical unit associated with the logical unit name is not

the first of the terminal's logical units to logon to JES2, the LUNAME associated with the session comes from the name pointed to by the parameter list that VTAM passes to the JES2 logon exit.

Note: You can change the value of this parameter only when the RJE workstation is inactive.

MFORM={J|M|T}
For BSC RJE workstations only, specifies the amount of information to be displayed in JES2 remote console messages for this RJE workstation.

J JES2 job-related messages including the jobname and job ID of the issuer.

M JES2 job-related message text only.

T JES2 job-related messages including a time stamp, the jobname, and job ID of the issuer.

MRF2780={No|Yes}
For BSC RJE workstations only, specifies whether (YES) or not (NO) this 2780 terminal has the multiple-record feature.

Note: You can change the value of this parameter only when the RJE workstation is inactive.

MSGPRT={No|Yes}
For BSC remotes, specifies whether (YES) or not (NO) JES2 prints messages routed to a printer attached to the console of an RJE workstation.

NO Specifies that JES2 discards messages if the RJE workstation console is not available.

Specify NO if you would rather discard messages instead of printing them on the first available printer at the remote.

For BSC RJE workstations, this parameter only has meaning for an RJE workstation that does **not** have a console.

YES Specifies that JES2 prints messages if the remote console is unavailable. For example, the remote console might not exist, be signed on, or have enough messages queued to it to exceed the RMTMSG= parameter on the TPDEF initialization statement.

For BSC RJE workstations, note that once a message is spooled for an RJE workstation, that message can only be printed; it cannot be displayed on an RJE workstation console.

MULTILV={No|Yes}
For BSC RJE workstations only, specifies whether (YES) or not (NO) this RJE workstation uses the BSC multileaving interfaces. If MULTILV=YES, you must specify a multileaving workstation. MULTILV=NO defines this RJE workstation as a BSC hardware terminal.

Note: You can change the value of this parameter only when the RJE workstation is inactive.

(nn)
The subscript defining the RJE workstation(s) affected by this command. The subscript may specify a 1- to 4-digit RJE workstation identifier or a range of

identifiers as defined by an RMTnn initialization statement. For information about specifying a range for this subscript, see “Syntax Conventions” at the front of this chapter.

NUMPRt=numprt
Specifies the number (0-7) of printers (BSC) or logical printers (SNA) at this RJE workstation. JES2 provides the defaults specified on the R(nn).PR(m) initialization statement for new printers if NUMPRT= is increased.

Use the $T R(nn).PR(m) command to change any characteristics of each printer.

For BSC RJE workstations, JES2 can use values greater than 1 only when you specify MULTILV=YES. If you specify MULTILV=NO, JES2 uses a value of NUMPRT=1. A maximum total of eight printers and punches can be defined.

Note: If you specify this parameter as 0, JES2 resets it to 1.

For SNA RJE workstations, a maximum total of eight printers, punches, and a console can be specified. The maximum value for NUMPRT= is 6 if you also specify CONS=YES.

Specify NUMPRT=0 if you want no printers on this SNA RJE workstation.

Notes:

1. You can change the value of this parameter only when the RJE workstation is inactive.
2. You must specify at least one device (printer, punch, reader, or SNA console) on the RMT definition.

NUMPUn=numpun
Specifies the number (0-7) of card punches (BSC) or logical card punches (SNA) at this RJE workstation or terminal. You must specify at least one device (printer, punch, reader, or SNA console) on the remote definition. JES2 provides the defaults specified on the R(nn).PU(m) initialization statement for new punches if NUMPUN= is increased. Then you can use the $T R(nn).PU(m) command to change any characteristics of each punch.

For BSC RJE workstations, a maximum total of eight printers and punches can be defined. If you specify MULTILV=NO and this parameter is specified greater than 1, JES2 uses only 1.

For SNA RJE workstations, a maximum total of eight printers, punches, and a console can be defined. SNA RJE workstations can support as many as seven punch data streams.

Note: You can change the value of this parameter only when the RJE workstation is inactive.

NUMRDr=numrdr
Specifies the number (0-7) of card readers (BSC) or logical card readers (SNA) at this RJE workstation or terminal. SNA RJE workstations can support as many as seven reader data streams. You must specify at least one device (printer, punch, reader, or SNA console) on the remote definition. JES2 provides the defaults specified on the R(nn).RD(m) initialization statement for new readers if NUMRDR= is increased. Then you can use the $T R(nn).RD(m) command to change any characteristics of each reader.

For BSC workstations, if you specify MULTILV=NO, this parameter is set to 1. If you set this parameter to 0, JES2 resets it to 1.

Note: You can change the value of this parameter only when the RJE workstation is inactive.

Password=password
The 1- to 8-character security password used to prevent unauthorized RJE workstation users from using the resources of this RJE workstation.

If you do not specify this parameter, JES2 provides no password. If you specify a null password (P=), JES2 deletes the previously assigned password.

Note: Be certain to make a note of those passwords assigned because there is no facility for displaying the passwords in effect.

RECFM={FIXED|VARIABLE}
For BSC RJE workstations only, specifies whether the data record for this terminal is fixed-length (FIXED) or variable-length (VARIABLE).

Note: You can change the value of this parameter only when the RJE workstation is inactive.

RMT150={No|Yes}
Specifies $HASP150 message routing as follows:

No
The $HASP150 message is sent only to the local operator.

Yes
If this RJE workstation has a console, the $HASP150 message is first sent to this console and then to the local operator.

Notes:

1. For SYSTEM36 (S/36) terminals, if you specify CONS=YES, MULTILV=YES, and RMT150=YES, the remote printer pauses to ensure that the $HASP150 message arrives at the console before the data sets begin to print.
2. For SNA RJE workstations, this parameter is valid only if CONS=YES.
3. This parameter is not valid for hardware terminals.

Routecde=routecde
Specifies the route code (1 to 32767) assigned to this terminal and its associated printers, punches and readers. (However, you can specify one route code for the RJE workstation and different ones for the printers and punches to meet unique installation requirements.) If you do not assign a Routecde= value, JES2 assigns the number of this terminal (RMT(nn)) as its route code.

Notes:

1. You can change the value of this parameter only when the RJE workstation is inactive.
2. If you are changing the value of this parameter to a value not equivalent to *nn* of RMT(*nn*), you must first complete the following steps:
   - Change the routing for all work from the previous RJE workstation routing to the new RJE workstation routing.
   - Determine if you need to change the Routecde= parameter for this RJE workstation's associated remote devices (printers, punches, readers, or console).

SETUP={MSG|PDIR}
For SNA RJE workstations only, specifies setup information as follows:

MSG
Specifies that JES2 must inform the remote operator of any setup requirements through the $HASP190 message. After setup is complete, the operator must enter a $S command to start JES2 transmission.

PDIR
Specifies that JES2 constructs and sends a peripheral data information record (PDIR) to the RJE workstation. The RJE workstation must process the data set header and generate any required messages. This setting allows spooling of data and generation of multiple copies of a data set at the RJE workstation.

Note: You can change the value of this parameter only when the RJE workstation is inactive.

SHARable|SHAREable={No|YES}
For BSC RJE workstations only, specifies whether (YES) or not (NO) JES2 allows the LINE= parameter value to be used by other RJE workstations. (If LINE=0, JES2 ignores this parameter.)

NO
Indicates that no other RJE workstations can specify and use the LINE= value and no /*SIGNON JCL statement is needed to start the remote.

YES
Indicates that multiple RMT definitions can also specify and use (share) the line specified on LINE= and a /*SIGNON JCL statement is required to start one of these RJE workstations.

Notes:

1. You can change the value of this parameter only when the RJE workstation is inactive.
2. If you change the LINE= parameter specification and you do not specify this parameter, JES2 sets this parameter to SHARABLE=YES.

TRANSPAR={No|Yes}
For BSC RJE workstations only, specifies whether (YES) or not (NO) this RJE workstation has the text-transparency feature. To use this feature, you must also specify TRANSPAR=YES on the LINE(nn) initialization statement.

Note: You can change the value of this parameter only when the RJE workstation is inactive.

WAITIME=waitime
The length of time in seconds (0-30), that the RJE workstation access method (RTAM) should wait after completing the processing of any input stream, printed output stream, or punched output stream to allow the operator to enter an input stream at this RJE workstation.

For SNA RJE workstations, if WAITIME= is set too low (note the default of 1 second), contention might occur during SNA logon processing, which results in $HASP094 messages and the termination of the SNA session. Increase this parameter to allow the RJE workstation adequate time to respond during logon processing so that proper LU type 1 protocol is followed.

Authority Required

This command requires **device** authority. The description of the $T RDRnn command explains how to ensure the proper MVS system command group authority is assigned.

This command requires **update** security access authority. For a description of assigning command input authority, see *z/OS JES2 Initialization and Tuning Guide*.

Scope

Single Member. The values supplied for this command will be in effect for this member only.

Depending on your installation's setup, however, you might want this command to be applied to all members of the MAS (to ensure a consistent environment across the MAS). If so, you can use the MVS ROUTE *ALL command to issue this command to all active members (if the JES2 command character is the same on all members). See *z/OS MVS System Commands* for more information on using the ROUTE *ALL command.

Messages

The $HASP879 message displays the status of the specified remote device and its current characteristics.

Examples

1 `$trmt1,d=8000,password=newpas,msgprt=n`

```
$HASP879 RMT(1)   DEVTYPE=S/360,STATUS=INACTIVE,BUFSIZE=400,
$HASP879          CONDEST=1,CONS=YES,DISCINTV=8000,LINE=0,
$HASP879          LOCAL190=ACTION,MFORM=T,MSGPRT=NO,MULTILV=YES,
$HASP879          NUMPRT=2,NUMPUN=1,NUMRDR=1,PASSWORD=(SET),
$HASP879          RMT150=NO,ROUTECDE=1,TRANSPAR=NO,WAITIME=1
```

JES2 sets RJE workstation 1 to automatic connect/disconnect mode. If no session activity takes place for 8000 consecutive seconds, JES2 automatically disconnects the RJE workstation. The password (NEWPAS) does not appear in the $HASP879 message. MSGPRT=NO specifies that JES2 is to discard remote console messages spooled for later display at a remote printer.

2 `$t rmt141,local190=action,mform=m,waitime=15`

```
$HASP879 RMT(141) DEVTYPE=S/360,STATUS=INACTIVE,BUFSIZE=400,
$HASP879          CONDEST=1,CONS=YES,DISCINTV=8000,LINE=0,
$HASP879          LOCAL190=ACTION,MFORM=M,MSGPRT=NO,MULTILV=YES,
$HASP879          NUMPRT=2,NUMPUN=1,NUMRDR=1,PASSWORD=(SET),
$HASP879          RMT150=NO,ROUTECDE=1,TRANSPAR=NO,WAITIME=15
```

The results of this command are:

- JES2 displays only the message text when job related messages are sent to BSC RJE workstation 141.
- The operator setup messages issued at the local console for this remote device are flagged as action messages (messages that require an operator action to delete them from the console).
- RTAM waits 15 seconds after completing the processing of any input stream or output stream, to allow the operator to enter an input stream at this RJE workstation.

3 `$t rmt6,luname=lu3770pc`

```
$HASP879 RMT(6)   DEVTYPE=LUTYPE1,STATUS=INACTIVE,AUTOLOG=NO,
$HASP879          BUFSIZE=256,COMPACT=NO,COMPRESS=YES,CONDEST=6,
$HASP879          CONS=NO,DISCINTV=0,LINE=0,LOCAL190=ACTION,
$HASP879          LUNAME=LU3770PC,MFORM=T,MSGPRT=YES,NUMPRT=1,
$HASP879          NUMPUN=0,NUMRDR=1,PASSWORD=(NOTSET),RMT150=NO,
$HASP879          ROUTECDE=6,SETUP=MSG,START=NO,WAITIME=1
```

JES2 sets the logical unit name of SNA RJE workstation 6 to ‘lu3770pc’.

$T REQJOBID - Set JOBID attributes.

Function

To specify or modify the JOBID address spaces.

Syntax

```
►►──$T──REQJobid──┬──────────────────────────────────────────────────┬──────────────────────────────────►◄
                  └─,JESLOG=──┬─NOSPIN──────────────────────────────┬─┘
                              │ ┌─SPIN──────┐                        │
                              │ │           │                        │
                              │ └─SUPPRESS──┘                        │
                              └─(──SPIN──┬──────────────────────┬──)─┘
                                         └─,criterion──────────┘
```

Parameters

JESLOG=SPIN|NOSPIN|SUPPRESS

If the JES2 initialization data set to be included is not cataloged, then the unit information for the device containing the data set must be specified in one of the following ways:

SPIN

JESLOG is spin-eligible. There is an optional second operand for SPIN:

- JESLOG=SPIN,hh:mm

  JESLOG will be spun at time hh:mm each 24 hour period.
- JESLOG=SPIN,+hh:mm

  JESLOG will be spun every hh:mm time interval.
- JESLOG=SPIN,n

  JESLOG will be spun when either data set has 'n' lines.

where 'hh' is hours and has a range of 0 through 23. 'mm' is minutes and has a range of 00 through 59. 'n' is the number of lines in the dataset and has a range of 1 through 999. 'n' is specified as nnn, nnnK or nnnM, where 'K' is thousands and 'M' is millions. The minimum number of lines that can be specified is 500.

Note: The order of precedence for Request Jobid address spaces from most dominant to least dominant is:

1. The specifications in the IEFSSRR SSOB extension (supplied by the application).
2. Specifications supplied by installation exits.
3. The REQJOBID statement.

NOSPIN

JESLOG will not be spun.

SUPPRESS

JESLOG will be suppressed.

Authority Required

This command requires **system** authority. The description of the $T RDRnn command explains how to ensure the proper MVS system command group authority is assigned.

This command requires **control** security access authority. For a description of assigning command input authority, see *z/OS JES2 Initialization and Tuning Guide*.

Processing Considerations

None.

Scope

Single Member. This command will be in effect for this member only.

Depending on your installation's setup, however, you might want this command to be applied to all members of the MAS (to ensure a consistent environment across the MAS). If so, you can use the MVS ROUTE *ALL command to issue this command to all active members (if the JES2 command character is the same on all members). See *z/OS MVS System Commands* for more information on using the ROUTE *ALL command.

Messages

The HASP860 message displays the current values of all the parameters on the REQJOBID statement.

Example

1

```
$treqjobid,jeslog=(spin,100K)
$HASP860 REQJOBID  JESLOG=(SPIN,100K)
```

Allow JESLOG to be spun when setting REQJOBID attributes.

2

```
$treqjobid,jeslog=suppress
$HASP860 REQJOBID  JESLOG=(SUPPRESS)
```

Suppress JESLOG when setting REQJOBID attributes.

$T SMFDEF - Control SMF Buffers

Function

To set the SMF buffer warning level.

Syntax

```
►►──$T──SMFDEF──┬──────────────────┬──────────────────────────────────────►◄
                └─,BUFWARN=bufwarn─┘
```

Parameters

BUFWARN=bufwarn
The percentage (0-100) of SMF buffers used at which the $HASP050 message alerts the operator of a shortage of SMF buffers. JES2 deletes this message from the console when the resource shortage is relieved (either by a decrease in resource use or an increase in the threshold).

Note: If you specify 0, no alert is given.

Authority Required

This command requires **device** and **system** authority. The description of the $T RDRnn command explains how to ensure the proper MVS system command group authority is assigned.

This command requires **control** security access authority. For a description of assigning command input authority, see *z/OS JES2 Initialization and Tuning Guide*.

Scope

Single Member. This command will be in effect for this member only.

Depending on your installation's setup, however, you might want this command to be applied to all members of the MAS (to ensure a consistent environment across the MAS). If so, you can use the MVS ROUTE *ALL command to issue this command to all active members (if the JES2 command character is the same on all members). See *z/OS MVS System Commands* for more information on using the ROUTE *ALL command.

Messages

The $HASP841 message displays the current values of all the parameters on the SMFDEF initialization statement.

Example

```
1  $t smfdef,bufwarn=85

$HASP841 SMFDEF BUFNUM=50,BUFFREE=50,BUFWARN=85
```

When 85 percent of the SMF buffers are being used, JES2 issues the $HASP050 message to alert the operator of a SMF buffer shortage.

$T SPOOL - Modify a Spool Volume

Function

To modify a spool volume.

Syntax

```
►►──$T──┬─SPL───┬──┬──────────────────────┬──┬──────────────────────
```

Examples

1

```
$tspl(spool1),sysaff=-psu1

 $HASP893 VOLUME(SPOOL1) $HASP893 VOLUME(SPOOL1)
 STATUS=ACTIVE,SYSAFF=(),TGNUM=525, $HASP893
 TGINUSE=142,TRKPERTGB=1,PERCENT=27
 $HASP646 43.3986 PERCENT SPOOL UTILIZATION
```

PSU1 will be removed from the list of members that this spool volume is associated with (if PSU1 was in the list).

2

```
$tspl(spool3),sysaff=(ibm1,nih1)

 $HASP893 VOLUME(SPOOL3) $HASP893 VOLUME(SPOOL3)
 STATUS=ACTIVE,SYSAFF=(IBM1,NIH1), $HASP893
 TGNUM=60,TGINUSE=50,TRKPERTGB=1, $HASP893 PERCENT=83
 $HASP646 43.3986 PERCENT SPOOL UTILIZATION
```

IBM1 and NIH1 will be added to the list of members that this spool volume is associated with.

$T SPOOLDEF - Set the JES2 Spooling Environment

Function

```
►►──$T──SPOOLDEF──┬──────────────────────────────────────────────────────────────────────────────────────────────►
                  │                  ┌──────────────────────┐                                                  │
                  │                  ▼                      │                                                  │
                  └─,FENCE=(──┬─Active=──┬─Yes──┬──┬──────┬──┬──)──┘   └─,──RELADDR──=──┬──ALWAYS───┬──┘
                              │          └─No───┘  │ │      │  │                         ├──ASNEEDED─┤
                              └─VOLUMES=─nnn───────┘ │      │  │                         └──NEVER────┘
                                                     │      │  │
►──┬──────────────┬──┬──────────────┬──┬──────────────────────┬──────────────────────────────────────────────►
   └─,SPOOLNUM=nnn─┘  └─,TGSIZE=nnnn─┘  │                      │
                                        │                      │
                                        │                      │
                                        └─,TGSPACE=(──┬──────────────────────┬──)──┘
                                                      │                      │
                                                      ▼                      │
                                                      └─MAX──=──nnnnnnnn─────┘
                                                        └─WARN──=──nnnnnnnn──┘

►──┬──────────────────────┬──────────────────────────────────────────────────────────────────────────────►◄
   └─,──VOLUME──=──nnnn───┘
```

To specify the JES2 spooling environment characteristics.

Syntax

Parameters

FENCE=

The FENCE parameter displays how track groups for jobs will be assigned across spool volumes.

ACTIVE=YES|NO

Determines whether (YES) or not (NO) any fencing is active at the time.

VOLUMES=nnn

Is the number of volumes a job will be fenced to.

Scope: MAS-Wide.

RELADDR=NEVER|ASNEEDED|ALWAYS

JES2 can address records on SPOOL data using one of 2 methods. The traditional method, absolute track addressing, uses a track address that starts at the beginning of a volume. Using this method, a SPOOL data set must be fully contained within the first 64K tracks of the volume. The newer method, relative track addressing, uses a track address that is relative to the start of the SPOOL data set. This method allows the SPOOL data set to be anywhere on a volume but may not be supported by all vendor applications that read SPOOL. RELADDR= controls which METHOD is used for a volume. The setting for RELADDR is only used when a SPOOL volume is started or on a COLD start. Once a volume is started, the addressing method for that volume cannot be changed without first draining the volume and re-starting it.

NEVER

Relative address is never used. If a SPOOL data set is not contained within the first 64K tracks on a volume, then the volume cannot be used for SPOOL and the start of that volume will fail.

ASNEEDED

If a SPOOL data set resides within the first 64K track, then absolute track address will be used. If the SPOOL data set crosses beyond the first 64K tracks, then relative track addressing will be used.

ALWAYS
Relative track addressing will always be used regardless of where the SPOOL data set is located on a volume. This is useful when testing to ensure that applications and exits function correctly with relative track addressing.

Note: A $HASP401 would result if you change a SPOOL to RELADDR=ALWAYS and attempt to start that SPOOL for a member that does not support relative addressing.

SCOPE: MAS-Wide

SPOOLNUM=nnn|32
Specifies the maximum number (1-253, rounded up to a multiple of 32 or 253) of spool volumes which can be defined at any one time to a multi-access spool complex. Spool volumes are defined by either use of the VOLUME= parameter on the initialization statement during a JES2 cold start, or they can be defined by using the $S SPL (start spool) operator command.

See *z/OS JES2 Initialization and Tuning Reference* for further information.

This parameter can only be specified after the $ACTIVATE command has been used to raise all members in the MAS complex to the Release 4 level of OS/390 or higher.

TGSIZE=nnnn
The default number (1-255) of JES2 buffers to be contained in a track group. JES2 uses this parameter to determine the size of a track group on a new spool volume being added to the complex.

Notes:

1. Changing this parameter does not affect those volumes previously defined.
2. If TGSIZE is not the same on all members of the complex, the TGSIZE value that is used when starting a spool volume cannot be predicted.

Scope: Single Member.

TGSPACE=(MAX=nnn)
Specifies the maximum number (1-16,581,184) of track groups allowed. This number can only be increased by operator command.

Scope: MAS-Wide.

VOLUME=nnnn
Specifies the four character prefix assigned to JES2 spool volumes. It must be the first four characters of the existing prefix.

Scope: MAS-Wide.

Authority Required

This command requires **system** authority. The description of the $T RDRnn command explains how to ensure the proper MVS system command group authority is assigned.

This command requires **control** security access authority. For a description of assigning command input authority, see *z/OS JES2 Initialization and Tuning Guide*.

Scope

The scope of this command varies by parameter. See the description of each parameter for its scope.

The values supplied for some parameters on this command will be in effect across the entire MAS, while the values supplied for other parameters will be in effect for this member only.

Depending on your installation's setup, you might want the parameters for this command to be applied to all members of the MAS (to ensure a consistent environment across the MAS). If so, you can use the MVS ROUTE *ALL command to issue this command to all active members (if the JES2 command character is the same on all members). See *z/OS MVS System Commands* for more information on using the ROUTE *ALL command.

Messages

The $HASP844 message displays the current values of all the parameters on the SPOOLDEF initialization statement.

Examples

1 `$T SPOOLDEF,TGSPACE=(WARN=70),TGSIZE=20`

```
$HASP844 SPOOLDEF
$HASP844 SPOOLDEF  BUFSIZE=3992,DSNAME=SYS2.HASPACE,
$HASP844 FENCE=(ACTIVE=NO,VOLUMES=1),
$HASP844 LASTSVAL=(2000.095,14:36:42),SPOOLNUM=32,
$HASP844 TGSIZE=20,TGSPACE=(MAX=16288,DEFINED=765,
$HASP844 ACTIVE=765,PERCENT=43.3986,FREE=433,WARN=70),
$HASP844 TRKCELL=3,VOLUME=SPOOL
```

Twenty JES2 buffers are used to determine the default size of a track group on a new spool volume. When 70% of the allocated track groups are in use, the $HASP050 message alerts the operator of a possible track group shortage.

2 `$tspooldef,fence=(active=yes,volumes=3)`

```
$HASP844 SPOOLDEF
$HASP844 SPOOLDEF BUFSIZE=3992,DSNAME=SYS1.HASPACE,
$HASP844 FENCE=(ACTIVE=YES,VOLUMES=3),
$HASP844 LASTSVAL=(2000.095,14:36:42),SPOOLNUM=32,
$HASP844 TGSIZE=20,TGSPACE=(MAX=16288,DEFINED=765,
$HASP844 ACTIVE=765,PERCENT=43.3986,FREE=433,WARN=70),
$HASP844 TRKCELL=3,VOLUME=SPOOL.BLOBSIZE=174
```

Allow each job to use up to three SPOOL volumes and then fence the job to those three volumes.

$T SSI(nnn) - Control the Subsystem Interface Definition

Function

To start or stop tracing for the specified subsystem interface (SSI) function.

To determine which SSI functions have been defined and to display information about an SSI function (such as the address, description, the assembly module containing the SSI function routine, and whether tracing is active), use the $D SSI command.

Syntax

```
►►──$T──SSI──┬─nnn──┬──────────┬──┬──────────────────────────────────────►
             │      └─-─┬─nnn─┬─┘  │  ┌─ Selection limiting keywords ─┐
             │          └─*───┘    │  └───────────────────────────────┘
             │   ┌──────────────┐  │
             │   ▼              │  │
             └──(──┬─nnn─┬──┬──┬──┴──)──
                   └─*───┘  │  │
                            └─-─┬─nnn─┬─
                                └─*───┘

►──┬──────────────────────────────────┬──────────────────────────────────►◄
   └─ Modification keywords ─┘
```

Modification keywords:

```
├──┬──────────────────────┬──────────────────────────────────────────────┤
   └─,TRace=──┬─No──┬──┘
              └─Yes─┘
```

Selection limiting keywords:

```
├──┬──────────────────────────────┬──────────────────────────────────────┤
   └─,──/──TRace──┬─=──┬──┬─No──┬──┘
                  └─^=─┘  └─Yes─┘
```

Parameters

SSI({nnn|*})
The SSI function number (1-256). Specify the number to start or stop tracing for a specific function or specify an asterisk (*) to start or stop tracing for all SSI functions.

TRace={No|Yes}
Specifies whether (Y) or not (N) tracing is to be activated for the indicated SSI function.

Note: In order to activate tracing for any of the SSI functions using the $T SSI(nnn),TR=Y command, you must first issue the $S TRACE(11) and/or the $S TRACE(12) commands, which enable processor, device, or SSI function $SAVE/$RETURN tracing.

No trace data will be generated for function code 54, though 54 can be specified.

Authority Required

This command requires **system** authority. The description of the $T RDRnn command explains how to ensure the proper MVS system command group authority is assigned.

This command requires **control** security access authority. For a description of assigning command input authority, see *z/OS JES2 Initialization and Tuning Guide*.

Scope

Single Member. This command will be in effect for this member only.

Depending on your installation's setup, however, you might want this command to be applied to all members of the MAS (to ensure a consistent environment across the MAS). If so, you can use the MVS ROUTE *ALL command to issue this command to all active members (if the JES2 command character is the same on all members). See *z/OS MVS System Commands* for more information on using the ROUTE *ALL command.

Messages

The $HASP648 message displays the current value of the TRACE= parameter on the SSI(nnn) initialization statement.

Example

```
1  $t ssi(1),tr=y

$HASP648 SSI(1) TRACE=YES
```

JES2 activates tracing for SSI function number 1.

$T TPDEF - Set JES2 Teleprocessing Characteristics

Function

To specify characteristics of the JES2 teleprocessing environment.

Syntax

```
►►──$T──TPDEF──┬──────────────────────┬──┬──────────────────────────────────────────────────────────────────────►
               └─,AUTOINTV=nnn────────┘  │                                                                        │
                                         └─,BSCBUF=(──┬──────────────────────┬──)──┘
                                                      │  ┌──────────────────┐  │
                                                      ▼  ,                  ▼  │
                                                      └──┬─LIMIT=nnnn──────┬──┘
                                                         └─WARN=nnn────────┘

►──┬──────────────────────────────────────────────────────────────────────────────────────────────────────────►◄
   │                                                                                                          │
   │                                                                                                          │
   │                                                                                                          │
```

storage, the installation should limit the number of teleprocessing buffers obtained. Once this number of buffers is reached, all requestors of buffers must wait until a buffer is freed. You can only increase the limit using this command.

WARN=nnn
Specifies the percentage (0-100) of I/O buffer use. If the buffer use is at or above this percentage, the operator is alerted via message $HASP050.

RMTMSG=nnn
The maximum number of messages (0-255) that may be queued to a remote console. When this count is exceeded, JES2 spools the messages until the message backlog for that remote console returns to zero.

SESSIONS=
Defines the specifications for VTAM sessions.

LIMIT=nnnn
Specifies the maximum number (1-9999) of VTAM sessions that can be active at any one time. Terminals or SNA NJE nodes attempting to log on when *nnnn* sessions are already active are not allowed to log on. You can only increase the limit using this command.

WARN=nnn
Specifies the percentage (0-100) of session utilization. If the session usage is above this percentage, the operator is alerted via message $HASP050.

Authority Required

This command requires **system** authority. The description of the $T RDRnn command explains how to ensure the proper MVS system command group authority is assigned.

This command requires **control** security access authority. For a description of assigning command input authority, see *z/OS JES2 Initialization and Tuning Guide*.

Scope

The scope of this command varies by parameter.

The value supplied for the RMTMSG parameter will be in effect for this member only. Depending on your installation's setup, however, you might want this parameter to be applied to all members of the MAS (to ensure a consistent environment across the MAS). If so, you can use the MVS ROUTE *ALL command to issue this command to all active members (if the JES2 command character is the same on all members).

All other parameters will be in effect for this member only, and there is no need to have these parameters issued to all members of the MAS.

See *z/OS MVS System Commands* for more information on using the ROUTE *ALL command.

Messages

The $HASP839 message displays the current values of all the parameters on the TPDEF initialization statement.

Example

1 `$t tpdef,bscbuf=(warn=75)`

```
$HASP839 TPDEF  AUTOINTV=32,AUTONUM=2,BSCBUF=(LIMIT=42,
$HASP839        WARN=75,FREE=42,SIZE=520),MBUFSIZE=400,
$HASP839        RMTMSG=200,RMTNUM=51,SESSIONS=(LIMIT=102,
$HASP839        WARN=80,FREE=102,FROZEN=0),SNABUF=(LIMIT=18,
$HASP839        WARN=80,FREE=18,SIZE=400)
```

$T TRACEDEF - Control the Trace Facility

Function

To specify the JES2 trace environment characteristics.

Syntax

```
►►──$T──TRACEDEF──┬──────────────────────────┬──┬──────────────────────────────────────────────────────────────────────────────────►
                  └─,ACTIVE=──┬─No──┬──┬──────┘  │                                                                  ┌─,SPIN─┐
                              └─Yes─┘  │          │                  ┌──────────────────────────┐                    │       │
                                       └─,LOG=(──▼──┬─CLASS=c──────────┬──)──┘
                                                    ├─SIZE=nnnnnnnnnn──┤
                                                    └─START=──┬─No──┬──┘
                                                              └─Yes─┘

►──┬──────────────────┬──┬──────────────────┬──────────────────────────────────────────────────────────────────────────────────►◄
   └─,TABLES=nnnn─────┘  └─,TABWARN=nnn─────┘
```

Parameters

ACTIVE={No|Yes}
Specifies whether or not JES2 is to start the trace facility.

LOG=
Specifies the characteristics for the trace facility log processor.

CLASS=c
The output class (A-Z, 0-9) of the trace log data set.

SIZE=nnnnnnnnnn
The maximum size, in bytes (100-2147483647), of the trace log data set. When this value is reached, JES2 queues the trace log for printing.

START={No|Yes}
Specifies whether or not the trace log information is to be formatted and periodically added to the trace log data set. Y further specifies that when the size of the trace log data set exceeds the amount specified by the SIZE parameter, JES2 spins off the data set and queues it for printing.

SPIN
Specifies that the trace log data set is to be spun off and queued for printing. A new data set is then opened for the trace log and entries on the trace log work queue are formatted and put to the new data set. If you do not specify SPIN, no action is taken.

Note: The SPIN parameter is valid only if logging is active (for example, if LOG=(START=Y)).

TABLES=nnnn
The number (0-2500) of trace tables (PAGES x 4K bytes) that JES2 is to obtain at any one time.

If you change the number of tables requested, JES2 immediately attempts to adjust the number of trace tables by either getting trace tables (if above the old number) or releasing tables (if below the old number). If JES2 cannot lower the number of trace tables sufficiently, the normal trace logging process makes the adjustment as trace tables are formatted and written.

TABWARN=nnn
Specifies the percentage of trace tables used at which the $HASP050 message alerts the operator of a trace table shortage.

Authority Required

This command requires **system** authority. The description of the $T RDRnn command explains how to ensure the proper MVS system command group authority is assigned.

This command requires **control** security access authority. For a description of assigning command input authority, see *z/OS JES2 Initialization and Tuning Guide*.

Scope

Single Member. This command will be in effect for this member only.

Depending on your installation's setup, however, you might want this command to be applied to all members of the MAS (to ensure a consistent environment across the MAS). If so, you can use the MVS ROUTE *ALL command to issue this command to all active members (if the JES2 command character is the same on all members). See *z/OS MVS System Commands* for more information on using the ROUTE *ALL command.

Messages

The $HASP698 message displays the current values of all the parameters on the TRACEDEF initialization statement.

Example

1
```
$t tracedef,active=y,log=(class=b,start=y)

$HASP698 ACTIVE=Y,TABLES=3,PAGES=,
         TABWARN=80,
         TABFREE=3,LOG=(CLASS=B,START=YES,
         SIZE=500),STATS=(TOTDISC=0,DISCARDS=0,
         IDS=(NONE))
```

JES2 starts the trace facility. The trace information obtained is formatted and added to the trace log data set periodically. The output class of the trace log data set is B.

$VS - Enter MVS System Commands through JES2

Function

To enter an MVS system command in a job stream, through an automatic JES2 command, or within the JES2 initialization data set.

Syntax

```
►►──$VS──,'command('command')... ──────────────────────────────────────────────►◄
```

Parameters

'command'
The MVS system command(s) that are submitted through JES2. You must use double quotes in any MVS command that uses single quotes. For example, to issue an MVS SEND command, you would enter:

$VS,'SEND ″message text″,USER=(userid)'.

Authority Required

This command requires **system** authority. The description of the $T RDRnn command explains how to ensure the proper MVS system command group authority is assigned.

This command requires **control** security access authority. For a description of assigning command input authority, see *z/OS JES2 Initialization and Tuning Guide*.

Processing Considerations

The $VS command is valid only as an automatic command or in a job stream. If you wish to issue an MVS command from the console for immediate execution, enter the MVS command directly; $VS will not be accepted for this purpose.

The $VS command is normally entered from a local JES2 card reader that has system authority. The responses to the MVS command(s) entered with the $VS command appear at the console with master level authority on the issuing system.

Scope

Single Member. This command will be in effect for this member only. There is no need to have this command issued to all members of the MAS.

Messages

Entering an MVS command using $VS does not generate any JES2 messages. For information about any MVS messages, see *z/OS MVS System Messages, Vol 1 (ABA-AOM)*, SA22-7631

Example

1 `$vs, 'v (234,235,236),offline','d a'`

JES2 submits the MVS VARY and DISPLAY commands to the MVS system for processing if the commands were issued in a job stream or as automatic commands.

$Z A - Halt Automatic Command Processing

Function

To halt automatic command processing.

Syntax

```
►►──$Z A──,ALL──────────────────────────────────────────────────────────►◄
```

Parameters

ALL
JES2 suspends all automatic command processing.

Authority Required

This command requires **system** authority. The description of the $T RDRnn command explains how to ensure the proper MVS system command group authority is assigned.

This command requires **control** security access authority. For a description of assigning command input authority, see *z/OS JES2 Initialization and Tuning Guide*.

Processing Considerations

- JES2 automatically issues a $Z A command when:
  1. A backlog exists which prevents JES2 from issuing an automatic command for 5 minutes because it is out of CMBs.
  2. The operator alters the time forward by more than 24 hours or backward by any time period.
  3. Automatic command processing is halted for more than 24 hours (that is, a $Z A has been in effect for more than 24 hours), and then a $A command is entered.
- To restart automatic command processing, enter the $S A command.
- Automatic commands with time specified must be reentered whenever the elapsed time between a $Z A command and the next $S A command exceeds 24 hours.

Scope

Single Member. This command will be in effect for this member only.

Depending on your installation's setup, however, you might want this command to be applied to all members of the MAS (to ensure a consistent environment across the MAS). If so, you can use the MVS ROUTE *ALL command to issue this command to all active members (if the JES2 command character is the same on all members). See *z/OS MVS System Commands* for more information on using the ROUTE *ALL command.

Messages

The $HASP000 message indicates the command was accepted.

Notes:

1. If you enter $TA,ALL (to display the automatic commands) after you issue the $ZA,ALL, you see the display of all of the automatic commands ($HASP604 for each), followed by $HASP601 AUTOMATIC COMMANDS HALTED BY OPERATOR.
2. JES2 highlights the $HASP601 AUTOMATIC COMMAND HALTED BY SYSTEM message if JES2 halts automatic command processing. If you then issue $TA,ALL, you will receive the $HASP604 message for each automatic command, followed by $HASP601 AUTOMATIC COMMANDS HALTED BY SYSTEM.

Example

```
1  $z a,all

  $HASP000 OK
```

JES2 suspends all automatic command processing.

$ZAPJOB - Remove Job Structure from Job Queue

Function

To remove all traces of a job structure from the JES2 job queue.

WARNING: If improperly used, the ZAPJOB command can cause JES2 ABENDs, including ABENDs on multiple systems. Be sure to review the entire documentation before you use this command.

ZAPJOB can be used to remove all traces of a job structure from the JES2 job queue. It is intended to be used in situations where a job cannot be removed using normal JES2 commands or by a JES2 restart. You must take special care to ensure that the job and any output it may have created are not active in any JES2 process and not active on a device. Zapping a job that is active can lead to ABENDs and the loss of a PCE until JES2 is restarted. ZAPJOB will not correct queue errors. If the JOB or output queue has an error, a JES2 restart is needed to rebuild the job queue.

When specifiying a job to zap, IBM recommends that you specify as many operands as are known for the job being zapped. This reduces the possibility of accidentally zapping the wrong job because of a typing error.

Syntax

```
►►──$ZAPJOB──┬──────────────────────────────┬──┬──────────────────────┬──┬──────────────────────┬──►
             └─,JOBID=JOBnnnnnJ0nnnnnn──┘  └─,JOBKEY=xxxxxxxxxx─┘  └─,JOBNAME=cccccccc─┘

►──┬──────────────────┬──┬──────────────────┬──────────────────────────────────────────────────►◄
   └─,JQEINDEX=xxxx─┘  └─,JQEOFF=xxxxxx─┘
```

Parameters

JOBID=
The JES2 JOBID of the job to be zapped. This can be specified in any of the valid formats for a JES2 JOBID, such as J12345, JOB12345, S12345, STC12345, T12345, TSU12345. JOBID= is an optional keyword.

JOBKEY=
The hexadecimal job key that is associated with the job. This value is normally obtained from a dump. If JOBKEY=0 is specified, then JOBID=, JQEINDEX= or JQEOFF= must also be specified. JOBKEY= is an optional keyword.

JOBNAME=
The name of the job to be zapped. JOBNAME cannot be specified by itself. JOBID=, JOBKEY=, JQEINDEX, or JQEINDEX= must also be specified. JOBNAME= is an optional keyword.

JQEINDEX=
The index (in hexadecimal) of the JQE to be zapped. JQEINDEX is normally obtained from a dump. JQEINDEX= is an optional keyword.

JQEOFF=
The offset (in hexadecimal) of the JQE to be zapped. JQEOFF is normally obtained from a dump. JQEOFF= is an optional keyword.

Messages

The command response is a $HASP000 message. The $HASP250 message is issued when the job is zapped and indicates that the job was removed from the job queue structure (the job was zapped).

Notes:

1. One of JOBID=, JOBKEY=, JQEINDEX=, or JQEOFF= must be specified on ZAPJOB.
2. If a job has a job key of zero (job has not had a job key assigned or has partially purged), you must specifiy JOBKEY=0, JQEINDEX=, or JQEOFF= to zap the job.
3. A $ZAPJOB statement can be placed in the initialization deck. This is not the same as using the ZAPJOB initializaiton statement. A $ZAPJOB command in the initialization deck is processed after JES2 initialization has completed. A ZAPJOB initialization statement removes the job before verifying the job queue. Because of the risk of forgetting to remove it, IBM recommends that you do not place $ZAPJOB commands in the initialization deck.

Example

1

```
.zapjob,jobname=spin01,jobid=j8

 JOB00008 .HASP250 SPIN01 ZAPPED -- (JOB KEY WAS B379D031)
 .HASP000 OK
```

$Z I[vvvv] - Halt Initiator Activity

Function

To temporarily halt initiator processing.

Syntax

```
►►─$Z──┬─I────┬──┬──────────────────────────────────────────────────────────────────────────►
       └─Init─┘  │ ┌─nn──────────────────────────────┐ │ │ ┌─,──┬────┬─ASID──┬─=──┬─asid─┬
                 │ │                                 │ │ │ │    └─/──┘        ├─^=─┤      │
                 │ │ ┌─-──┬────┬──┬──────────────┬──┬─┘ │ │                  ├─>──┤      │
                 │ │ │    └─mm─┘  │              │  │   │ │                  └─<──┘      │
                 │ │ │            └─*────────────┘  │   │ │
                 │ │ └────────────────────────────┘   │ │
                 │ ├─'init'──────────────────────────┤ │
                 │ │   ┌──────────────────────────┐   │ │
                 │ │   ▼                          ,   │ │
                 │ │   ┌──┬────┬──┬──────────────┬──┬─┴─┬─)─┤ │
                 │ │   │  │ nn │  │              │  │   │   │ │
                 │ │   │  │ *  │  │ ┌─-──┬────┬──┬─┘   │   │ │
                 │ │   │  │    │  │ │    └─mm─┘  │     │   │ │
                 │ │   │  │    │  │ │            └─*───┘   │ │
                 │ │   │  │    │  │ └──────────────────┘   │ │
                 │ │   │  ├─init──────────────────────┤     │ │
                 │ │   │  └─'init'────────────────────┘     │ │
                 │ └─(─┴──────────────────────────────────┘ │
                 └──────────────────────────────────────────┘

►─┬─────────────────────────────────────────────────────────────────────────────────────────┬──►◄
  │ ┌─,──┬────┬─STATUS──┬─=──┬─ACTIVE──────────┬─┬─,──┬────┬─STC──┬─=──┬─stc─┬ │
  │ │    └─/──┘         └─^=─┤─DRAINED─────────┤ │ │    └─/──┘      ├─^=─┤     │ │
  │ │                        ├─DRAINING────────┤ │ │                ├─>──┤     │ │
  │ │                        ├─HALTED──────────┤ │ │                └─<──┘     │ │
  │ │                        ├─HALTING─────────┤ │ │                           │ │
  │ │                        ├─INACTIVE────────┤ │ │                           │ │
  │ │                        ├─RESTARTING──────┤ │ │                           │ │
  │ │                        └─STARTING────────┘ │ │                           │ │
  └─┴─────────────────────────────────────────────┴─┴───────────────────────────┴─┘
```

Parameters

I[nnmm[-nnmm]]
Specifies the subscript (1-9999) of the initiator(s) that are halted after completing their current activity. If you do not specify an initiator identifier (vvvv), JES2 halts all initiators.

ASID=asid
Specifies the ASID of the initiator to be halted.

STATUS{=ACTIVE|DRAINED|DRAINING|HALTED|HALTING|INACTIVE|RESTARTING|STARTING}
Displays the current state of the initiator.

Type	Meaning
ACTIVE	A job is active on the initiator.
DRAINED	The initiator is drained.
DRAINING	The initiator is transitioning to a DRAINED state.
HALTED	The initiator has been halted via a $Z I command.
HALTING	The initiator is transitioning to a HALTED state.
INACTIVE	The initiator has been started but has not selected a job.

RESTARTING
The initiator has terminated abnormally and is in the process of restarting automatically.

STARTING
The device has been started but has not fully initialized yet. Applies to FSS-owned devices only.

STC=stc
Displays the job id of the initiator to be halted.

Authority Required

This command requires **system** authority. The description of the $T RDRnn command explains how to ensure the proper MVS system command group authority is assigned.

This command requires **control** security access authority. For a description of assigning command input authority, see *z/OS JES2 Initialization and Tuning Guide*.

Scope

Single Member. This command will be in effect for this member only. There is no need to have this command issued to all members of the MAS.

Messages

The $HASP000 message indicates the command was accepted.

Example

1 `$z i1-2`

```
$HASP892 INIT(1)   STATUS=HALTED,CLASS=A,NAME=1
$HASP892 INIT(2)   STATUS=HALTED,CLASS=AB,NAME=2
```

JES2 halts initiators 1 and 2 after they complete their current activity.

$Z OFFLOADn - Halt Offload Activity

Function

To temporarily halt offload device activity so that the operator can reset the work selection criteria for the associated transmitters and/or receivers.

Syntax

```
►►──$Z──OFFLOADn──┬──────────────┬──────────────────────────────────────►◄
                  └─,OFFLOADn────┘
```

Parameters

n The number (1-8) of the offload device that is halted.

Authority Required

This command requires **device** authority. The description of the $T RDRnn command explains how to ensure the proper MVS system command group authority is assigned.

This command requires **update** security access authority. For a description of assigning command input authority, see *z/OS JES2 Initialization and Tuning Guide*.

Processing Considerations

- This command does not cause the offload data set to be deallocated.
- If you issue the $Z command during the transmit operation, any active transmitter(s) will finish processing their current work before JES2 halts the selection process.

  If you issue the $Z command during the receive operation, JES2 immediately halts any active receivers in the middle of the jobs being processed. When you restart the receive operation, the offload device will begin to read the offload data set at the point where it was halted.
- To restart the selection process, issue the $S OFFLOADn command for the type of operation (transmit or receive) that has been halted.

Scope

Single Member. This command will be in effect for this member only. There is no need to have this command issued to all members of the MAS.

Messages

The $HASP000 message indicates the command was accepted.

Example

1 `$z offload3,offload6`

```
$HASP000 OK
```

JES2 temporarily halts activity for offload devices 3 and 6.

$Z PRTnnnn and $Z Rnnnn.PRm - Halt Printer Activity

Function

To temporarily halt local or remote printer activity.

Syntax

```
►►──$Z──┬─PRTnnnn──────┬─┬──────────────┬──────────────────────────────────►◄
        └─Rnnnn.PRm────┘ ├─,PRTnnnn─────┤
                         └─,Rnnnn.PRm────┘
```

Parameters

PRTnnnn
The local printer that is halted.

Rnnnn.PRm
The remote printer that is halted.

Authority Required

This command requires **device** authority. The description of the $T RDRnn command explains how to ensure the proper MVS system command group authority is assigned.

This command requires **update** security access authority. For a description of assigning command input authority, see *z/OS JES2 Initialization and Tuning Guide*.

Scope

Single Member. This command will be in effect for this member only. There is no need to have this command issued to all members of the MAS.

Messages

The $HASP000 message indicates the command was accepted.

Example

1 `$z prt3,prt5`

```
$HASP000 OK
```

Printers 3 and 5 immediately stop printing. When you issue a $S command for these printers, printing is resumed at the point where it was halted.

$Z PUNnn and $Z Rnnnn.PUm - Halt Punch Activity

Function

To halt local or remote punch activity.

Syntax

```
►►─$Z─┬─PUnnn──────────┬─┬──────────────┬─────────────────────────────────────►◄
      └─Rnnnn.PUm──────┘ ├─,PUnnn───────┤
                         └─,Rnnnn.PUm────┘
```

Parameters

PUNnn
The local punch that is halted.

Rnnnn.PUm
The remote punch that is halted.

Authority Required

This command requires **device** authority. The description of the $T RDRnn command explains how to ensure the proper MVS system command group authority is assigned.

This command requires **update** security access authority. For a description of assigning command input authority, see *z/OS JES2 Initialization and Tuning Guide*.

Scope

Single Member. This command will be in effect for this member only. There is no need to have this command issued to all members of the MAS.

Messages

The $HASP000 message indicates the command was accepted.

Example

```
1  $z pun5,pun6

  $HASP000 OK
```

Punches 5 and 6 immediately stop punching. When you issue a $S command for these punches, processing is resumed at the point where it was halted.

$Z RDRnn - Halt Reader Activity

Function

To temporarily halt local reader activity.

Syntax

```
►►──$Z──RDRnn──┬──────────┬──────────────────────────────────────────►◄
               └─,RDRnn───┘
```

Parameters

RDRnn
The local reader that is halted.

Authority Required

This command requires **device** authority. The description of the $T RDRnn command explains how to ensure the proper MVS system command group authority is assigned. The $T RDI sets the command authority for internal readers.

This command requires **update** security access authority. For a description of assigning command input authority, see *z/OS JES2 Initialization and Tuning Guide*.

Scope

Single Member. This command will be in effect for this member only. There is no need to have this command issued to all members of the MAS.

Messages

The $HASP000 message indicates the command was accepted.

Example

1 `$z rdr1,rdr2`

```
$HASP000 OK
```

JES2 immediately halts local readers 1 and 2. When you issue a $S command for these readers, processing is resumed at the point where it was halted.

$Z SPOOL - Halt a Spool Volume

Function

To deallocate a spool volume after active work completes its current phase of processing (executing, printing, punching.)

Syntax

```
►►─$Z──┬─SPL───┬──┬─nn──────────────────────────┬──┬──────────────────────────────────────────────────────────────────►◄
       └─SPOOL─┘  │  └─-──┬─mm─┬──┬──────────┬──┘  │  ┌─,──────┬─Volume──┬─=──┬─volume─┬
                  │       └─*──┘  │          │     │  └─,──┬─/──┘         ├─^=─┤        │
                  ├─'volume'──────┘          │     │       │              ├─>──┤        │
                  │                          │     │       │              └─<──┘        │
                  │   ┌──────────────────────┐     │       │                           │
                  │   ▼                      │     │       │                           │
                  └─(─┬─nn─┬──┬─-──┬─mm─┬──┬─)──┘       │                           │
                      │    └─*──┘  │    └─*──┘  │          │                           │
                      ├─volume─────┘            │          │                           │
                      └─'volume'────────────────┘          │                           │
```

Parameters

Volume=volume
The volume serial number of the spool volume.

Authority Required

This command requires **system** authority. The description of the $T RDRnn command explains how to ensure the proper MVS system command group authority is assigned. The $T RDI sets the command authority for internal readers.

This command requires **control** security access authority. For a description of assigning command input authority, see *z/OS JES2 Initialization and Tuning Guide*.

Processing Considerations

When you issue the $Z command, no new work is allowed to start and no new space on the volume is allocated. Any currently allocated space remains intact and the volume can be removed without loss of work. The volume status is HALTING until all currently active jobs which have space allocated on the volume are completed. After all active jobs have completed, the volume status is INACTIVE. To bring the volume back into the JES2 environment, issue a $S SPOOL command. When the active work has completed the volume is unallocated, and the $HASP893 message is issued.

If a spool failure occurs, the operator should be instructed to issue a $Z SPL command for each volume that is in error. This will prevent JES2 from trying to allocate more space from that volume, and from being selected for work (i.e. conversion, execution, and printing). For more information on how to recover from a spool volume failure, see *z/OS JES2 Initialization and Tuning Guide*.

If an all-member warm start is done without the volumes that had errors on them, then JES2 message $HASP424, VOLUME NOT MOUNTED, will be issued followed by JES2 message $HASP853, REPLY GO, QUIT, or PURGE. If the volume is thought to be recoverable at some time, reply GO. This will cause the volume to come up in an inactive state. The jobs that have space allocated from this volume

will not be available for work. JES2 will not attempt to use any space from the volume until a $S SPL command is issued.

If the volume is permanently damaged, reply PURGE to this message. Reply PURGE only if you are absolutely certain that the volume cannot be recovered. Replying PURGE will cause all jobs with space allocated from that volume to be purged. No messages or warnings will be issued indicating that this happened.

You can use the FENCE parameter on the SPOOLDEF initialization statement to define the spooling environment by controlling the partitioning of the spool volumes. This can be a safeguard against spool failure. You use the FENCE parameter to tell JES2 how to partition spool volumes when performing I/O operations. If fencing is turned off then jobs that have already obtained some spool space when fencing was active will not be fenced. The syntax of the FENCE= keyword is changed to FENCE=(ACTIVE=YES,VOLUMES=nnn) to indicate that all space that a job requires will be allocated from ″nnn″ volumes.
(FENCE=(ACTIVE=YES,VOLUMES=1) is equivalent to FENCE=YES in prior releases.) These volumes are determined by JES2 as the first available volume from which this job can allocate space.

Although, FENCE=(ACTIVE=YES,VOLUMES=nnn) indicates that JES2 will fence to nnn volumes in most cases. However, more than nnn volumes may be used in certain situations (when spool volumes fill or if the job obtains spool space on different systems as it goes through different phases.) JES2 will allocate space from a subsequent volume(s) when, and if, the ″nnn″ becomes full. Refer to the FENCE= parameter on the SPOOLDEF statement in *z/OS JES2 Initialization and Tuning Reference* for how to use this parameter. You may also set the FENCE= parameter using the $T SPOOLDEF command.

JES2 exits 11 and 12 can be used as an alternative method for limiting the volumes from which a job may allocate space.

Scope

MAS-Wide. This command has an effect across the entire MAS.

Messages

The $HASP000 message indicates the command was accepted.

Example

1 `$z spl,v=spool1`

```
$HASP000 OK
```

JES2 halts SPOOL1 (which is currently active, starting, or draining).

Appendix A. Notes About the Publication Index

The index to this publication is designed to allow you to easily find what parameters apply to individual commands. Each ″level 1″ index entry identifies a parameter that you can specify on a JES2 command. Each ″level 2″ entry below the ″level 1″ entry identifies a JES2 command in which this parameter can be specified.

The only ″level 1″ entry that is an exception to this is the entry of ″Function″. Listed under the level 1 index entry of ″Function″ are the various activities and actions you can take to display JES2 processing status or affect JES2 operations. By following the index page number, you will find the JES2 command that performs the function.

© Copyright IBM Corp. 1988, 2002

Appendix B. Accessibility

Accessibility features help a user who has a physical disability, such as restricted mobility or limited vision, to use software products successfully. The major accessibility features in z/OS enable users to:

- Use assistive technologies such as screen-readers and screen magnifier software
- Operate specific or equivalent features using only the keyboard
- Customize display attributes such as color, contrast, and font size

Using assistive technologies

Assistive technology products, such as screen-readers, function with the user interfaces found in z/OS. Consult the assistive technology documentation for specific information when using it to access z/OS interfaces.

Keyboard navigation of the user interface

Users can access z/OS user interfaces using TSO/E or ISPF. Refer to *z/OS TSO/E Primer*, *z/OS TSO/E User's Guide*, and *z/OS ISPF User's Guide Volume I* for information about accessing TSO/E and ISPF interfaces. These guides describe how to use TSO/E and ISPF, including the use of keyboard shortcuts or function keys (PF keys). Each guide includes the default settings for the PF keys and explains how to modify their functions.

© Copyright IBM Corp. 1988, 2002

Notices

This information was developed for products and services offered in the U.S.A. IBM may not offer the products, services, or features discussed in this document in other countries. Consult your local IBM representative for information on the products and services currently available in your area. Any reference to an IBM product, program, or service is not intended to state or imply that only that IBM product, program, or service may be used. Any functionally equivalent product, program, or service that does not infringe any IBM intellectual property right may be used instead. However, it is the user's responsibility to evaluate and verify the operation of any non-IBM product, program, or service.

IBM may have patents or pending patent applications covering subject matter described in this document. The furnishing of this document does not give you any license to these patents. You can send license inquiries, in writing, to:

IBM Director of Licensing
IBM Corporation
North Castle Drive
Armonk, NY 10504-1785
USA

For license inquiries regarding double-byte (DBCS) information, contact the IBM Intellectual Property Department in your country or send inquiries, in writing, to:

IBM World Trade Asia Corporation
Licensing
2-31 Roppongi 3-chome, Minato-ku
Tokyo 106, Japan

The following paragraph does not apply to the United Kingdom or any other country where such provisions are inconsistent with local law:
INTERNATIONAL BUSINESS MACHINES CORPORATION PROVIDES THIS PUBLICATION "AS IS" WITHOUT WARRANTY OF ANY KIND, EITHER EXPRESS OR IMPLIED, INCLUDING, BUT NOT LIMITED TO, THE IMPLIED WARRANTIES OF NON-INFRINGEMENT, MERCHANTABILITY OR FITNESS FOR A PARTICULAR PURPOSE. Some states do not allow disclaimer of express or implied warranties in certain transactions, therefore, this statement may not apply to you.

This information could include technical inaccuracies or typographical errors. Changes are periodically made to the information herein; these changes will be incorporated in new editions of the publication. IBM may make improvements and/or changes in the product(s) and/or the program(s) described in this publication at any time without notice.

Any references in this information to non-IBM Web sites are provided for convenience only and do not in any manner serve as an endorsement of those Web sites. The materials at those Web sites are not part of the materials for this IBM product and use of those Web sites is at your own risk.

IBM may use or distribute any of the information you supply in any way it believes appropriate without incurring any obligation to you.

Licensees of this program who wish to have information about it for the purpose of enabling: (i) the exchange of information between independently created programs

© Copyright IBM Corp. 1988, 2002

and other programs (including this one) and (ii) the mutual use of the information which has been exchanged, should contact:

IBM Corporation
Mail Station P300
2455 South Road
Poughkeepsie, NY 12601-5400
USA

Such information may be available, subject to appropriate terms and condition including in some cases, payment of a fee.

The licensed program described in this information and all licensed material available for it are provided by IBM under terms of the IBM Customer Agreement, IBM International Program License Agreement, or any equivalent agreement between us.

This information contains examples of data and reports used in daily business operations. To illustrate them as completely as possible, the examples include the names of individuals, companies, brands, and products. All of these names are fictitious and any similarity to the names and addresses used by an actual business enterprise is entirely coincidental.

COPYRIGHT LICENSE:

This information contains sample application programs in source language, which illustrates programming techniques on various operating platforms. You may copy, modify, and distribute these sample programs in any form without payment to IBM, for the purposes of developing, using, marketing or distributing application programs conforming to the application programming interface for the operating platform for which the sample programs are written. These examples have not been thoroughly tested under all conditions. IBM, therefore, cannot guarantee or imply reliability, serviceability, or function of these programs. You may copy, modify, and distribute these sample programs in any form without payment to IBM for the purposes of developing, using, marketing, or distributing application programs conforming to IBM's application programming interfaces.

If you are viewing this information softcopy, the photographs and color illustrations may not appear.

Programming Interface Information

This publication primarily documents information that is NOT intended to be used as Programming Interfaces of z/OS.

This publication also documents intended Programming Interfaces that allow the customer to write programs to obtain the services of z/OS. This information is identified where it occurs, either by an introductory statement to a chapter or section or by the following marking:

- Programming Interface information
- End of Programming Interface information

Trademarks

The following terms are trademarks of the IBM Corporation in the United States, other countries or both:

- Advanced Function Printing
- AFP
- AS/400
- BookManager
- DB2
- eNetwork
- ESCON
- GDDM
- IBM
- IBMLink
- MVS/ESA
- OS/390
- Print Services Facility
- Processor Resource/Systems Manager
- PR/SM
- RACF
- Resource Link
- S/370
- SOM
- System/390
- VTAM
- z/OS
- z/OS.e

Other company, products, and service names may be trademarks or service marks of others.

Index

Special characters

-
  $T INTRDR 649
'job'
  $T 653
(*)
  $D L(nnnn).JR(n) 261
(abnormal)
  $T OUTCLASS(n) 756
(n)
  $T L(nn).JT(nn) 675
  $T L(nnnn).ST(n) 679
  $T OFF.ST 738, 744
  $T OFFLOAD 753
  $T OUTCLASS 756
(nn)
  $T L(nn).JT(nn) 675
  $T RMT 825
(nnnn)
  $T L(nnnn).ST(n) 678
(normal)
  $T OUTCLASS(n) 756
$P JES2 start option
  specifying 8
*
  $D NODE 315
  $D PATH 362
  $P LOGON 534
  $P RMT 548
  $P TRACE 552
  $S LINE(nnnn) 569
  $S LOGON 571
  $T FSS 642
  $T INTRDR 649
  $T MEMBER 696
  $T NODE 704
  $T OFF.JR 723
  $T OFF.JT 729
  $T RECVopts 813
  $T REDIRect 815
'command'
  $M 511
  $N
    commands through network 512
  $T A 596
  $VS 846
'job'
  $A 107
  $C 169
  $D 243
  $E 450
  $H 487
  $L 508
  $P 528
  $PO 536
  $S 565
  $TO 714
'jobname'
  $G A 470
  $G C 472
  $G D 474
  $G H 476
  $G R,OUT 479
  $G R,XEQ 482
  $R 554
'output'
  $O 516
%
  $H JOB 488
+
  $T INTRDR 649

A

A
  $A 105
  $H 484
  $S N LINEnnnn
    SNA node communications 576
aaaaaaaa
  $T APPL 600
ABEND
  $P JES2 524
ac
  $T FSS 642
acccccccc
  $T FSS 642
accessibility 861
ACCTFLD
  $D JOBDEF 257
  $T JOBDEF 668
ACTCLASS
  $D I 236
  $D Init 236
ACTive
  $D pce 366
  $T PCE 766
ACTIVE
  $D TRACEDEF 432
  $T TRACEDEF 844
  DETails
    $D pce 367
ADDRess
  $D LOADMOD(jxxxxxxx) 280
  $D MODULE(jxxxxxxx) 297
  $D SSI(nnn) 422
Age
  $A 107
  $C 170
  $CO 177
  $D job 244
  $DO Job 321
  $E Job 450
  $H JOB 487
  $O Job 517

© Copyright IBM Corp. 1988, 2002

Age *(continued)*
$P job 528
$PO job 536
$T JOB 653
$TO JOB 714
AJOBMASK
$H JOB 487
ALL
$A 105
$C A 166
$CO 177
$D A job 187
$D N 303
$D Q 392
$D SPOOL 416
$D U 434
$DO Job 321
$H A 484
$O Job 517
$P job 528
$R 554
$S A 562
$T A 595
$TO JOB 536, 714
$Z A 847
Allocated
$D pce 366
$T PCE 766
alternate checkpoint data set 8
ANY
$D N 303
$D Q 392
$T INTRDR 648
appl
$ADD APPL 113
Applid
$D LGN 282
$D LOGON 282
$T LOGON(n) 689
APPLID
$ADD LGN 130
$ADD LOGON 130
ARCHIVE
$D OFFLOAD 350
$T OFFLOAD(n) 753
ARM_element
$D job 244
ARMRESTART
$C 170
ASID
$D FSS 232
$D FSSDef 232
$D PRTnnnn 380
$D Rnnnn.PRm 380
$D I 236
$D Init 236
$P Inn 522
$P Inn-mm 522
$Z Initvvvv 851
$Z Ivvvv 851
ASIS
$T PRINTERnnn 778
$T PRTnnn 778
$T Rnnnn.PRm 778
ASSEMBLY
$D MODULE(jxxxxxxx) 297
asterisk
range
asterisk 91
JES2 interpretation 91
upper limit 91
Auth
$D INTRDR 239
$D R(nn).RD(mm) 404
$D RDI 400
$D RDR(nn) 404
$T INTRDR 648
$T RDRnn 807
$T Rnnnnn.RDm 807
AUTH
$D NODE 315
$T NODE(nnnnn) 705
authority
reader 806
AUTOCMD
$D CONDEF 208
AUTODISC
$ADD LINE 125
$ADD LNE 125
$D LINE(nnnn) 274
$T LINE(nnnn) 683
AUTOEMEM
$D MASDEF 288
$T MASDEF 692
AUTOEMEM option
make job eligible for restart 692
reset the checkpoint lock 692
AUTOINTV
$D TPDEF 427
$T TPDEF 841
Autolog
$T RMTnn 821
AUTOstop
$ADD FSS 123
$ADD FSSDef 123
$D FSS 232
$D FSSDef 232
$T FSS 642
AUTOSYS
$T MASDEF 692
AWAITING
$D SPOOL 416

B

B
$TO JOB 714
BAD_JOBNAME_CHAR
$D JOBDEF 257
$T JOBDEF 668

BASE
$T NUM 711
BATCH
$D INTRDR 239
BELOWBUF
$D BUFDEF 198
$T BUFDEF 603
BERT
$T DEBUG 619
BERTFREE
$D CKPTSPACe 204
BERTNUM
$D CKPTSPACe 204
$T CKPTSPACE 612
BERTWARN
$D CKPTSPACe 204
$T CKPTSPACE 612
BLNKTrnc
$D OUTCLASS 355
BLOCK
$T RMTnn 821
BOSS
$D MEMBER 292
BRODCAST
$D OUTDEF 357
$T OUTDEF 759
BSCBUF
$D TPDEF 427
$T TPDEF 841
BUFEXPAN
$T RMTnn 821
BUFFREE
$D CONDEF 208
$D SMFDEF 413
BUFNUM
$D CONDEF 208
$D SMFDEF 413
$T CONDEF 613
BUFSIZE
$D SPOOLDEF 419
$T RMTnn 821
BUFWARN
$D CONDEF 208
$D SMFDEF 413
$T CONDEF 613
$T SMFDEF 833
Burst
$ADD PRINTER 137
$ADD PRT 137
$D OFF(n).ST 337, 345
$D PRTnnnn 379
$D Rnnnn.PRm 379
$DO Job 321
$T OFF(n).ST 738, 744
$T PRINTERnnn 778
$T PRTnnn 778
$T Rnnnn.PRm 778
BURST
$TO JOB 714

C

C
$ADD PRINTER 137
$ADD PRT 137
$B PRTnnnn 161
$B PUNnnnn 164
$B Rnnnn.PRm 161
$D OFF(n).ST 338, 345
$D PRTnnnn 380
$D Rnnnn.PRm 380
$DO Job 321
$F PRTnnnn 465
$F Rnnnn.PRm 465
$Rnnnn.PUm 164
$T OFF(n).ST 738, 745
$T PRINTERnnn 778
$T PRTnnn 778
$T Rnnnn.PRm 778
$TO JOB 714
Cancel
$E Job 450
$P SPOOL 549
$S SPL 589
$S SPOOL 589
CANcel
$O Job 517
CANCEL
$D job 244
CARDS
$D job 244
CC
$D job 244
cccc
$C A 166
$T A 595
CCTL
$T PUNnn 796
$T Rnnnn.PUm 796
CCWNUM
$D PRINTDEF 371
$D PUNCHDEF 386
CES
$D CONNECT 212
CHAR
$T PRINTERnnn 790
$T PRTnnn 790
$T Rnnnn.PRm 790
CHAR(1-4)
$D PRTnnnn 379
$D Rnnnn.PRm 379
CHARS
$D COMPACT 206
checkpoint
$T CKPTDEF command 605
reconfiguration 605
CKPT
$T DEBUG 619
CKPT1 start option 8
CKPT2 start option 8
CKPTLINE
$ADD PRINTER 137

CKPTLINE *(continued)*
$ADD PRT 137
$D PRTnnnn 379
$D PUNnn 389
$D Rnnnn.PRm 379
$T PRINTERnnn 779
$T PRTnnn 779
$T PUNnn 797
$T Rnnnn.PRm 779
$T Rnnnn.PUm 797
Rnnnn.PUm 389
CKPTLOCK
$D MASDEF 288
$E 447
CKPTMODE
$ADD PRINTER 137
$ADD PRT 137
$D PRTnnnn 379
$D Rnnnn.PRm 379
$T PRINTERnnn 779
$T PRTnnn 779
$T Rnnnn.PRm 779
CKPTn
$D CKPTDEF 200
CKPTPAGE
$ADD PRINTER 138
$ADD PRT 138
$D PRTnnnn 379
$D PUNnn 389
$D Rnnnn.PRm 379
$T PRINTERnnn 780
$T PRTnnn 780
$T PUNnn 797
$T Rnnnn.PRm 780
$T Rnnnn.PUm 797
Rnnnn.PUm 389
CKPTSEC
$ADD PRINTER 138
$ADD PRT 138
$D PRTnnnn 380
$D Rnnnn.PRm 380
$T PRINTERnnn 780
$T PRTnnn 780
$T Rnnnn.PRm 780
Class
$D INTRDR 239
$D job 244
$D OFF(n).JR 329
$D OFF(n).JT 329
$D OFF(n).SR 329
$D OFF(n).ST 329
$D PRTnnnn 380
$D PUNnn 389
$D R(nn).RD(mm) 404
$D RDI 400
$D RDR(nn) 404
$D Rnnnn.PRm 380
$D I 236
$D Init 236
$T INIT 644
$T JOB 653
Class *(continued)*
$T OFF.JR(n) 723, 724
$T OFF.JT(n) 729
$T PRINTERnnn 785
$T PRTnnn 785
$T PUNnn 799
$T RDRnn 808
$T Rnnnn.PRm 785
$T Rnnnn.PUm 799
$T Rnnnnn.RDm 808
Rnnnn.PUm 389
CLass
$ADD PRINTER 138
$ADD PRT 138
$D OFF(n).JT 332
CLASS
$T INTRDR 648
$T TRACEDEF 844
cmd
$D REDIRECT 410
CMDauth
$A 107
$C 170
$CO 177
$D job 245
$DO Job 321
$E Job 450
$H JOB 487
$L job 509
$O Job 517
$P job 528
$T JOB 653
CMDNUM
$D CONDEF 208
CMDNUMBUFNUM
$T CONDEF 613
CMPCT
$T PRINTERnnn 780
$T PRTnnn 780
$T PUNnn 797
$T Rnnnn.PRm 780
$T Rnnnn.PUm 797
CNVT_END
$T JOBDEF 668
CNVT_ENQ
$D JOBDEF 257
CNVTNUM
$D PCEDEF 370
CODE
$ADD LINE 125
$ADD LNE 125
$D LINE(nnnn) 274
$T LINE(nnnn) 683
COLD start option
specifying NOREQ 8
COLDTIME
$D MASDEF 288
COLDVRSN
$D MASDEF 288
command
authority 806

command *(continued)*
range
asterisk 91
JES2 interpretation 91
upper limit 91
reader
$T RDRnn command 806
syntax diagrams 101
COMMAND
$D MEMBER 292
$D SPOOL 416
command authority
set node 705
COMPACT
$ADD APPL 113
$D 206
$D APPL 195
$D NODE 316
$T APPL 601
$T NODE(nnnnn) 706
$T PRINTERnnn 780
$T PRTnnn 780
$T RMTnn 822
$T Rnnnn.PRm 780
compaction
table number 113
COMPRESS
$ADD LINE 126
$ADD LNE 126
$D LINE(nnnn) 274
$T LINE(nnnn) 683
$T PRINTERnnn 780
$T PRTnnn 780
$T PUNnn 797
$T RMTnn 822
$T Rnnnn.PRm 780
$T Rnnnn.PUm 797
con_spec
$ADD REDIRect 149
CONCHAR
$D CONDEF 208
$T CONDEF 613
CONDEST
$T RMTnn 822
CONDitional parameter
on PROCLIB statement 772
CONS
$T RMTnn 823
CONSOLE start option
specifying $P JES2 8
COPIES
$D OUTDEF 357
$T OUTDEF 759
COPYMARK
$ADD PRINTER 138
$ADD PRT 138
$D PRTnnnn 380
$D Rnnnn.PRm 380
$T PRINTERnnn 781
$T PRTnnn 781
$T Rnnnn.PRm 781
COUNT
$D pce 366
$D RECVopts(*) 408
$D RECVopts(type) 408
$T RECVopts 813
CReator
$ADD PRINTER 138
$ADD PRT 138
$D OFF(n).JR 329
$D OFF(n).JT 329, 333
$D OFF(n).SR 329
$D OFF(n).ST 329, 338, 345
$D PRTnnnn 380
$D PUNnn 389
$D Rnnnn.PRm 380
$T OFF.JR(n) 723
$T OFF.JT(n) 729
$T OFF(n).ST 738, 744
$T PRINTERnnn 781
$T PRTnnn 781
$T PUNnn 797
$T Rnnnn.PRm 781
$T Rnnnn.PUm 797
Rnnnn.PUm 389
CRTIME
$DO Job 322
CURJOB
DETails
$D pce 367

D

D
$B PRTnnnn 161
$B PUNnnnn 164
$B Rnnnn.PRm 161
$C 170
$D A job 187
$D M 285
$F PRTnnnn 465
$F PUNnn 468
$F Rnnnn.PUm 468
$G R,OUT 478
$G R,XEQ 481
$N ‘command’
commands through network 512
$R 556
$R XEQ 559
$Rnnnn.PUm 164
DA
$ADD REDIRect 150
$T REDIRect 815
Days
$C 170
DAys
$A 107
$CO 177
$D job 244
$DO Job 321
$E Job 450
$H JOB 487

DAys *(continued)*
$O Job 517
$P job 528
$PO job 536
$T JOB 653
$TO JOB 714
DBLBUFR
$D PRINTDEF 371
$D PUNCHDEF 386
DCONNECT
$ADD REDIRect 150
$T REDIRect 815
DEBUG
$T 619
DEF
$ADD REDIRect 150
$T REDIRect 815
Defined
$D pce 367
$T PCE 766
DELAY
$D job 245
$D JOBDEF 257
$D NJEDEF 311
$T NJEDEF 699
DESC
$D pce 367
$D SSI(nnn) 422
Dest
$CO 178
$DO Job 322
$O Job 517
$PO job 536
$TO JOB 714
DEST
$ADD DEStid 118
$D DEStid 217
$DEL DEStid 441
$T DEStid(vvvvvvvv) 625
destid
$G A 470
$G C 472
$G D 474
$G H 476
$G R,XEQ 482
DEV
$D A job 187
DEVFCB
$ADD PRINTER 138
$ADD PRT 138
$D PRTnnnn 380
$D Rnnnn.PRm 380
$T PRINTERnnn 781
$T PRTnnn 781
$T Rnnnn.PRm 781
DEVFLASH
$ADD PRINTER 139
$ADD PRT 139
$D PRTnnnn 380
$D Rnnnn.PRm 380
$T PRINTERnnn 781
DEVFLASH *(continued)*
$T PRTnnn 781
$T Rnnnn.PRm 781
Device
$T RDRnn 807
$T Rnnnnn.RDm 807
DEVICE
$T INTRDR 648
DF
$ADD REDIRect 150
$T REDIRect 815
DI
$ADD REDIRect 150
$T REDIRect 815
disability 861
Discintv
$T RMTnn 823
Discon
$D LINE(nnnn) 274
$T LINE(nnnn) 684
DISP
$D OFF(n).JT 333
$D OFF(n).ST 345
$T OFF.JT(n) 729
$T OFF(n).ST 744
display
initialization statement 224
DISPLEN
$D CONDEF 208
$T CONDEF 613
DISPMAX
$D CONDEF 208
$T CONDEF 614
DJ
$ADD REDIRect 150
$T REDIRect 815
DMNDSET
$D OUTDEF 357
DN
$ADD REDIRect 150
$T REDIRect 815
DNODE
$ADD REDIRect 150
$T REDIRect 816
documents, licensed xv
DORMANCY
$D MASDEF 289
$T MASDEF 692
DQ
$ADD REDIRect 150
$T REDIRect 816
DRAIN
$S SPL 589
$S SPOOL 589
DS
$ADD REDIRect 150
$T REDIRect 815
DSN
$D OFFLOAD 350
$T OFFLOAD(n) 753

DSName
$T CKPTDEF 607
DSNAME
$D SPOOLDEF 419
DSName parameter
on PROCLIB statement 772
DSPL
$ADD REDIRect 150
$T REDIRect 816
DT
$ADD REDIRect 150
$T REDIRect 815
DU
$ADD REDIRect 150
$T REDIRect 816
Dump
$C 170
$G C 472
DUPL_JOB
$D JOBDEF 257
$T JOBDEF 669
DUPLEX
$ADD LINE 126
$D CKPTDEF 201
$D LINE(nnnn) 275
$T CKPTDEF 605
$T LINE(nnnn) 684
DUPLIEX
$ADD LNE 126

E

Ended
$D pce 367
$T PCE 766
ENDED
DETails
$D pce 367
ENDNODE
$D NODE 316
$T NODE(nnnnn) 706
entry_console
$ADD REDIRect 150
$D REDIRECT 410
ENViron
$D EXIT 225
$D MODULE(jxxxxxxx) 297
ESTIME
$D 224
ESTPAGE
$D 222
ESTPUN
$D 223
EXIT
DETails
$D pce 367
EXIT(*)
$D 225
EXIT(nnn)
$D 225
EXITPTS
$D MODULE(jxxxxxxx) 298
EXTBUF
$D BUFDEF 198
$T BUFDEF 603

F

F
$TO JOB 716
FCB
$ADD PRINTER 137
$ADD PRT 137
$D OFF(n).ST 338, 345
$D PRINTDEF 371
$D PRTnnnn 380
$D Rnnnn.PRm 380
$DO Job 321
$T OFF(n).ST 738, 739, 745
$T PRINTERnnn 778
$T PRTnnn 778
$T Rnnnn.PRm 778
$TO JOB 714
FCBLOAD
$T PRINTERnnn 781
$T PRTnnn 781
$T Rnnnn.PRm 781
FENCE
$D SPOOLDEF 419, 836
Flash
$D OFF(n).ST 345
$T OFF(n).ST 745
FLash
$D OFF(n).ST 338
$T OFF(n).ST 738
FLASH
$ADD PRINTER 139
$ADD PRT 139
$D PRTnnnn 380
$D Rnnnn.PRm 380
$DO Job 324
$T PRINTERnnn 782
$T PRTnnn 782
$T Rnnnn.PRm 782
FLUSH
$D PUNnn 389
$T PUNnn 798
$T Rnnnn.PUm 798
Rnnnn.PUm 389
FMID
$D MODULE(jxxxxxxx) 298
FORCE
$P JES2 524
Format
$S SPL 589
$S SPOOL 589
FORMAT start option
specifying COLD 8
Forms
$ADD PRINTER 139
$ADD PRT 139

Forms *(continued)*
$D OFF(n).ST 338, 346
$D PRTnnnn 380
$D PUNnn 389
$D Rnnnn.PRm 380
$DO Job 323
$T OFF(n).ST 738, 739, 745
$T PRTnnn 782
$T PUNnn 798
$T Rnnnn.PRm 782
$T Rnnnn.PUm 798
$TO JOB 716
Rnnnn.PUm 389
FormsE
$T PRINTERnnn 782
FREE
$D BUFDEF 198
FSATRACE
$T PRINTERnnn 778
$T PRTnnn 778
$T Rnnnn.PRm 778
FSS
$ADD PRINTER 139
$ADD PRT 139
$D PRTnnnn 380
$D Rnnnn.PRm 380
$T PRINTERnnn 782
$T PRTnnn 782
$T Rnnnn.PRm 782
FSSDef
$D FSS 232, 233
$D FSSDef 232, 233
FSSINFO
$D PRTnnnn 380
$D Rnnnn.PRm 380
FSSLENG
$D FSSDef 233
FSSMADDR
$D FSS 232
$D FSSDef 232
$D PRTnnnn 380
$D Rnnnn.PRm 380
FSSMAPAR
$D FSS 232
$D FSSDef 232
$D PRTnnnn 380
$D Rnnnn.PRm 380
FSSMLENG
$D FSS 233
$D PRTnnnn 380
$D Rnnnn.PRm 380
FSSMPTF
$D FSS 233
$D FSSDef 233
$D PRTnnnn 380
$D Rnnnn.PRm 380
function
establishing
jobid meaning 84
sysid meaning 84
Function
#D M command 81
activate/deactivate trace identifier
$S TRACE command 20
$T Trace command 20
add
line 125
logon device 130
network connections 115
RJE workstation 152
adding
application 78
comments to commands 90
advance
printer output 465
punch output 468
allow
JES2-controlled initiators to select work 594
WLM-controlled initiators to select work 594
assign
jobid 34
LOGON ID 689
LOGON password 689
assigning
JES2/VTAM password 78
line password 79
NJE line passward 79
backspace
printer output 161
punch output 164
cance
held output groups 516
cancel
automatic commands 166
job at another node 472
job output 60
jobs on a spool volume 60
NJE device 174
output 176
reader activity 186
cancel job 168
cancel printer
output 184
cancel punch
output 185
cancel spool offlaod
transmitter 182
cancel spool offload
receiver 182
change
initialization 17
job affinity 60
job's affinity 651
job's class 651
job's scheduling priority 651
member's operational mode 695
RJE workstation 818
static network connections 616
with $T command 17
change destination ID
$T DEStid command 624

Function *(continued)*
changing
application 78
applications 71
job characteristics 60
job execution priority 57
NJE symbolic destination 74
checkpoint
DUAL mode 17
DUPLEX mode 17
use $T MASDEF command mode 17
command control JES2
command list 1
conditionally purge
output 64
connect
remote terminal 587
considering
SNA RJE 38
control
$C A command 19
$P SPOOL command 21, 22
$S SPOOL command 21
$T A command 19
$T SPOOLDEF command 21, 22
$Z A command 19
$Z SPOOL command 21, 22
Addressing Mode 21
automatic commands 19
default spool utilization per job 630
draining 22
execution time 632
functional subsystem (FSS) 642
initiators 644
internal readers 647
JES2 applications 600
JES2 network environment 699
JES2 spooling 21, 22
JES2 symbolic destination 624
JES2 symbolic destination displays 622
job execution 57
line 682
local buffers 603
MAS environment 692
print environment 769
printer characteristics 775
printer output 36
punch characteristics 795
punch output 36
reader 806
SMF buffers 833
SPOOLDEF initialization statement 21
subsystem interface definition 839
trace facility 844
VTAM interface 689
control automatic command
list 3
control diagnostic command
list 4
control MVS/JES2 command
list 5

Function *(continued)*
control spool command
list 5
controlling
$S LOGON(n) command 78
$T CONDEF command 32
device environment 25, 32
FSS(functional subsystem) 25
initiators 57
internal readers 34
JCL OUTPUT statement 62
JES2/VTAM interface 38
JES2/VTAM interfaces 70
job execution 51
job output 62
job output characteristics 62
job output priority 62
jobs at another node 52, 61
networks 69
NJE devices 72
NJE environment 72
NJE lines 71, 79
NJE static connections 71
offload devices 30
offload transmitters/receivers 47
output 54
output groups 67
printers 26
punches 27
readers 25
remote job entry 37
remote terminal characteristics 38
RJE line 38
RJE lines 29
RJE workstations 29, 38
transmitting/receiving devices 81
VTAM interface 28
VTAM interface for SNA NJE 78
WLM initiators 58
controlling MAS environment
command list 2
controlling NJE static connection 80
define
FSS 123
local printer 135
symbolic destination 118
VTAM application 113
define FSS
$T FSS command 33
using $ADD FSS 33
with $ADD FSS command 33
defining
$T DEStid command 626
application 78
applications 71
two-level destids 626
delete
network connections 439
deleting
symbolic destinations 441

Function *(continued)*
describing
device list and abbreviations 31
device states 31
initiator states 31
overview of devices 31
describing device
active 31
drained 31
halted 31
inactive 31
paused 31
deterimining
job class priority 57
determining
spool status classifications 23
diagnose
JES2/VTAM interface 78
diagnose JES2
$D LOADMOD command 21
$D MODULE command 21
$D SSI command 21
$T DEBUG command 21
$T SSI command 20
$T TRACEDEF command 20
$T RECVopts command 20
display module information 21
recovery processing 20
start stop 21
start/stop trace 20
disable
JES2 exit points 640
disconnect
line 273
display
$D L(nnnn).SR(n) 267
$D R(nn).RD(mm) 402
$D RDR command 33
$D RDR(nn) 402
$D U,RDRs command 33
$D L(nnnn).JR(n) 261
$D L(nnnn).JT(n) 264
$D REBLD command 406
# of bytes for job 220
activate of JES2 191
active job information 56
active jobs 187
active RJE workstations 193
adapter code (BSC) 273
another node job information 474
assembled module info. 296
automatic commands 595
buffer definitions 198
characteristics assigned to jobs 257
checkpoint definition 200
checkpoint spaces 204
connection resistance rate 213
console communicaitons 208
current job priority characteristics 260
device 434
device status 399

Function *(continued)*
display *(continued)*
exit point characteristics 225
forms queue 228
FSS characteristics 232
initialization settings 430
initialization statement 408
initiator info. 235
input reader device 33
input reader numerical id 33
internal reader status 399
INTRDR Init STmt characteristics 239
JES2 processor tracing status 364
JES2 status 11
job information 55, 241
job log send message 284
job output forms queue 228
job output priority 360
job queue info. 303
job receiver status 261
job transmitter status 264
jobs using spool 415
line 434
line characteristics 273
line receiver 267
lines of job output 221
load module info. 279
logon 434
LOGON interfaces 282
MAS member 291
MAS sppol definition 288
MAS tuning parameters 288
message to node 284
MVS DISPLAY command 11
network account numbers 309
network connections 211
network environment 311
NJE node attributes 75
node characteristics 314
node paths 362
number of jobs queued 392
number of logical initiators 234
OFF(n).JR 328
OFF(n).JT 328
OFF(n).SR 328
offlaod job transmitter 332
offload device 434
offload devices 350
offload job receiver 328
offload SYSOUT receiver 336
offload SYSOUT transmitter 344
output characteristics 319
output classes 355
output definition options 357
output pages set for jobs 222
partitioning of spool 424
PCE definitions 370
printer characteristics 376
printer initialization settings 371
printer status 434
punch 434

Function *(continued)*
display *(continued)*
punch characteristics 388
punch initialization settings 386
reader 434
reader status 399
rebuild queue information 406
redirection 410
remote device 434
remote device control authority 402
SNA NJE applications 206
SNA NJE Apps. 195
spool partitioning 419
spool states 22
spool status 415
spool usage 392
spool volume state 22
SSI 422
SSI information 839
start options 353
status of SMF buffers 413
status of trace ids 430
subnet connections 425
subsystems 11
symbolic destination 217
symbolic destinations 215
SYSOUT receiver 267
SYSOUT transmitter 270
SYSOUT transmitter status 270
system symbols 86
teleprocessing characteristics 427
time set for jobs 224
trace characteristics 432
track spool volumes 419
display control authority
remote console 397
display delay interval
node communications 311
transmission 311
display job information
list of commands 49
display NJE
job 82
display node paths
$D PATH command 362
display remote console
$D R(n).CON(m) command 397
control authority 397
display setting
punch pages for jobs 223
display SYSOUT transmitter
$D L(nnnn).ST(n) 270
status 270
displaying
$D command 16
$D MASDEF command 16
$D MEMBER command 16
$D PATH command 74
$D SUBNET command 74
anytime 16
MAS 16

Function *(continued)*
displaying *(continued)*
MAS member status 16
NJE node connections 74
NJE path resistance 74
node information 75
drain
job output 535
offload receiver 541
spool volume 549
enable
JES2 exit points 640
enter
MVS system commands 846
entering
multiple commands on a line 88
expanding the command scope
in a MAS 17
JES2 commands 17
MVS ROUTE *ALL command 17
format start 11
grouping
SYSOUT 34
halt
automatic command processing 847
HALT EOD command 14
initiator activity 851
offload activity 853
printer activity 854
punch activity 855
reader activity 856
spool volume 857
HALT EOD command 525
handling
cross network activity 73
excessive NJE looping 73
hold
all jobs 484
job at another node 476
specific jobs 486
holding and releasing
job queues 60, 61
jobs 51
hot start 12
identifying
JOE identifier 68
initiate
batch job into execution 565
checkpoint reconfiguration dialog 605
interrupt
printer activity 505
punch activity 507
job option warm start
hold 13
queue 13
restart 13
list
job output information 508
modify
automatic commands 595
checkpoint definition 605

Function *(continued)*
modify *(continued)*
job characteristics 659
started task characteristics (STC) 659
time-sharing user characteristics (TSU) 659
modify/add
spool volume 834
modifying
NJE transmisssion delay 73
monitor
VTAM interface 689
monitoring
$T BUFDEF command 15
$T SMFDEF command 15
buffers 15
SMF buffers 15
offload/reload
spool device 46
operator request
D R command 16
display commands 16
display JES2 request 16
prevent
JES2-controlled initiators from work 553
WLM-controlled initiators from work 553
processing
output 34
purge
a job 527
job output 535
jobs on a spool volume 60
purging
jobs 60
quick start 11, 12
recognizing
NJE lockout condition 73
redirect
$ADD REDIRECT command 16
$D REDIRECT command 16
$T REDIRECT command 16
$T REDIRect 815
command responses 815
commands 149
job output 16
referencing
two-level destids 119
referencing destinations
$T DESTid command 119
second-level destination 119
release
all jobs 105, 771
held jobs 106
held output groups 516
job to another node 470
release/cancel
job output 66
removing
$DEL DEStid command 74
NJE symbolic destination 74
repeat
printer output 514
Function *(continued)*
repeat *(continued)*
punch output 515
request
route job output by another node 478
request another node
route job execution 481
reset
$T NUM command 59
checkpoint lock 18, 446
job number 59
restart
$E command 18
checkpoint lock 18
JES2 18
JES2/VTAM interface 457
job 449
jobs on failed member 458
line activity 455
NJE device activity 453
printer activity 463
punch activity 464
spool offload transmitter 462
sysplex member 18
restart JES2 11
restart JES2 by command 12
restarting
jobs 60
restricting
NJE operations 39
RJE operations 39
route
job output 554
job to another node 56, 59
jobs for execution 559
routing
$R command 67
job output 67
send
$D M command 57
commands through network 512
message to another node 57
message to job log 57
to Other MAS Members 511
sending
messages/commands through the network 81
sending commands
$N n command 81
in a JES2 MAS 17
MVS ROUTE *ALL command 17
throught the network 72
using the console character 17
sending messages
throught the network 72
set
$T SMFDEF command 833
checkpoint space 612
connection resistance rate 114, 116
console comuunication characteristics 613
default data set disposition 756
error rate 813

Function *(continued)*
set *(continued)*
internal reader authority 807
JES2 DEBUG option 619
JES2 internal job numbers 711
job class characteristics 659
job output characteristics 759
job processing characteristics 668
job scheduling characteristics 673
line count 634
node characteristics 703
offload device characteristics 752
offload job receiver characteristics 722
offload job transmitter characteristics 728
offload SYSOUT receiver characteristics 735
offload SYSOUT transmitter characteristics 743
output characteristics 712
output scheduling priorities 763
page count 636
punch estimate 638
recovery options 813
resistance rate 617
SMF buffers 833
spool volume track group 424
spooling environment 836
SYSOUT class characteristics 756
teleprocessing characteristics 841
set node
command authority 82
setting
($) identifier 84
command authority 75
command identifier 84
explicit destination identifier 92
explicit route codes 92
internal reader command authority 807
job execution characteristics 50
maximuym command length 85
node authority 75
node password 76
offload characterictics 47
second-level destination 625
setting output
$T PRT command 36
characteristics 36
setting RJE workstation
automatic connect/disconnet 39
specify
$T CKPTDEF command 18
$T ESTPAGE command 66
$T EXIT command 14
$T JOBCLASS(n) 64
$T OUTCLASS(n) 64
$T SPOOLDEF command 836
automatic commands 595
checkpoint definition 18
default page count 66
disable 14
enable 14
exit points 14
JES2 applications 600

Function *(continued)*
specify *(continued)*
job execution time 59
job priority 59
output disposition 64
spool partitioning 836
SYSOUT network job transmitter characteristics 675
SYSOUT transmitter characteristics 678
trace 14
specify XBM
$T JOBCLASS command 661
cataloged procedure 661
specifying
$ADD DEStid command 74
initiator parameters 50
job characteristics 59
job output characteristics 53
NJE symbolic destination 74
NJE TOD range 73
node characteristics 69
output line count 66
output scheduling priority 65
output spool space 65
punch card count 66
spooling
messages to remote 39
start
$S LINE command 569
automatic command processing 562
batch job into execution 565
BSC line node communication 573
initiator 563
JES2 DEBUG option 619
JES2/VTAM interface 571
line 569
NJE BSC line 76
NJE device 567
offload device 580
offload transmitter/receiver 578
printer 582
punch 584
reader 586
SNA line node communication 576
SNA NJE line 77
SYS1.PROCLIB JCL 14
system activity 561
Trace ID 592
start printer
$S PRT command 35
start SNA/VTAM
node communications 77
start VTAM 77
start work selection
$S XEQ 594
start/add
spool volume 589
starting
BSC node communications 70
SNA node communications 70

Function *(continued)*
starting BSC line
communications 76
starting SNA
application-to-application session 77
stop
$Z SPOOL 857
a line 533
initiator 522
JES2 521, 524
JES2/VTAM interface 534
job output 535
NJE device 532
offload device 543
offload transmitter 541
printer 544
punch 546
reader 547
spool volume 857
trace id 552
stop JES2
$P command 14
stopping
jobs 60
terminate
remote connection 548
trace
$T SSI command 839
all JES2 processors 765
exit points 14
line 273
SSI information 839
use
$T LOGON(n) command 689
$T OFF.ST command 743
$T LINE command 682
$T MEMBER command 695
$T NJEDEF command 699
$T NODE command 703
$T NUM command 711
$T O command 712
$T OFFLOAD command 752
$T OUTCLASS(n) command 756
$T OUTDEF command 759
$T OUTPRTY command 763
$T PCE command 765
$T PRINTDEF command 769
$T PRT command 775
$T PUNnn command 795
$T RECVopts command 813
$T RMT command 818
$T TPDEF command 841
$T TRACEDEF command 844
$VS command 846
$Z OFFLOADn command 853
$Z A command 847
$Z PRT command 854
$Z PUNnn command 855
halt $Z Ivvvv command 851
using
$T MEMBER command 15

Function *(continued)*
using *(continued)*
$T O command 62
command identifier rules 85
command syntax 83
command syntax rules 85
execution batch monitor 58
independent mode 15
JES2 command filtering techniques 99
JOE (job output element) 62
limiting nformation 99
MAXHOP parameter 73
maximum number of operands 85
MVS REPLY command 8
MVS ROUTE command 17
parameter ranges 90
SDSF (spool display and search facility) 62
selection criteria 99
syntax conventions 83
system symbols 86
system symbols, rules and recommendations 86
wildcards in commands 93
using NJE
global commands 82
warm start 11
withdraw
JES2 524
withdraw JES2
network jobs 524
Function initialization
display
initialization settings 408
Function JES2
start
option 5
Function output
displaying
$T PRINTDEF 67
job output 67

G

GSUBNUM
$D SUBTDEF 424

H

H
$O Job 518
$P job 529
$T INTRDR 648
$T JOB 654
$T OUTCLASS(n) 757
$TO JOB 716
HALT
$S SPL 590
$S SPOOL 590
HASPFSSM
$ADD FSS 123
$D FSS 233
$D FSSDef 233

HASPFSSM *(continued)*
$D PRTnnnn 381
$D Rnnnn.PRm 381
$T FSS 642
HASPPARM
$D OPTSDEF 353
HASPPARM=ddname start option
specifying CONSOLE 8
HDRBUF
$D NJEDEF 311
$T NJEDEF 699
Health Monitor
JDDETAILS 491
JDHISTORY 494
JDJES 497
JDMONITOR 499
JDSTATUS 501
JSTOP 503
Held
$L job 509
$PO job 538
HELD
$CO 179
$DO Job 323
HELDBY
$E CKPTLOCK 447
Hold
$D INTRDR 239
$D OFF(n).JR 329
$D OFF(n).JT 329, 333
$D OFF(n).SR 329
$D OFF(n).ST 329, 338, 346
$D R(nn).RD(mm) 404
$D RDR(nn) 404
$T INTRDR 648
$T OFF.JR(n) 723, 724
$T OFF.JT(n) 729
$T OFF(n).ST 738, 739, 745
HOLD
$D job 246
$D L(nnnn).JR(n) 261
$D MASDEF 289
$D NODE 316
$D RDI 400
$DO Job 323
$PO job 537
$T JOB 654
$T MASDEF 692
$T NODE(nnnnn) 706
$T OUTCLASS(n) 757
$T RDRnn 808
$T Rnnnnn.RDm 808
$TO JOB 716
HOLDRC
$DO Job 323
HONOR
$T INTRDR 648
HONORlim
$D INTRDR 239
Hours
$A 107
Hours *(continued)*
$C 170
$CO 179
$D job 246
$DO Job 323
$E Job 450
$H JOB 487
$O Job 518
$P job 529
$PO job 538
$T JOB 654
$TO JOB 716
HTABS
$T RMTnn 824

I

I
$D I 236
$S 563
$T A 595
I/O
DETails
$D pce 367
I(vvvv)
$S 563
IBMJES2
$D MODULE(jxxxxxxx) 298
IND
$D MEMBER 292
$D N 303
$D Q 392
$T INTRDR 649
$T MEMBER 696
init
$S 563
Init
$D Init 236
init(vvvv)
$S 563
INITASID
$D job 246
initialization
specifying option 8
initialization statement
range
asterisk 91
JES2 interpretation 91
upper limit 91
Inn
$P 522
Inn-mm
$P 522
Innmm
$Z 851
INT
$D ESTBYTE 220
$D ESTIME 224
$D ESTLNCT 221
$D ESTPAGE 222
$D ESTPUN 223

INT *(continued)*
$T ESTBYTE 630
$T ESTIME 632
$T ESTLNCT 634
$T ESTPAGE 636
$T ESTPUN 638
INTERFAC
$ADD LINE 126
$ADD LNE 126
$D LINE(nnnn) 275
$T LINE(nnnn) 684
INTERVAL
$D RECVopts(*) 408
$D RECVopts(type) 408
$T RECVopts 814
INTRDR
$D 240
$T 647

J

J
$D A job 187
$D F 230
$G A 470
$G C 472
$G D 474
$G H 476
$G R,OUT 479
$G R,XEQ 482
$R 554
$R XEQ 559
JACCT
$D NETACCT 309
JCLERR
$D JOBDEF 257
$T JOBDEF 669
JES2
$P 524
JM
$A 107
$C 170
$CO 179
$D job 246
$DO Job 323
$E Job 450
$H JOB 487
$L job 509
$O Job 518
$P job 529
$PO job 538
$T JOB 654
$TO JOB 716
JNUMBASE
$D JOBDEF 257
JNUMFREE
$D JOBDEF 257
JNUMWARN
$D JOBDEF 258
$T JOBDEF 669
job
$A 107
$C 169
$CO 177
$D 243
$E 449
$H 487
$L 508
$P 528
$PO 535
$S 565
$T 652
$TO 714
route for execution
at another node 559
transmitter
network 126, 684
Job
$A 107
$DO 321
$E 450
$L 508
$O 517
$P 528
$PO 536
$T 653
$T INTRDR 648
$T NODE(nnnnn) 705
$T RDRnn 807
$T Rnnnnn.RDm 807
$TO 714
JOB
$D A job 187
$G H 476
$G R,OUT 479
job_id
$D M 284
JOBDEF
$D 257
JOBFREE
$D JOBDEF 258
JOBID
$D I 236
$D Init 236
JOBID=
$ZAPJOB 849
JOBKEY=
$ZAPJOB 849
JOBMASK
$A 107
$C 170
$CO 179
$D job 246
$DO Job 323
$E Job 450
$L job 509
$O Job 518
$P job 529
$PO job 538
$T JOB 654
$TO JOB 716

JOBn
$G C 472
$G D 474
$G R,XEQ 482
$R 554
JOBN
$G A 470
JOBname
$ADD PRINTER 139
$ADD PRT 139
$D OFF(n).JR 329
$D OFF(n).JT 329, 333
$D OFF(n).SR 329
$D OFF(n).ST 329, 338, 346
$D PRTnnnn 381
$D PUNnn 389
$D Rnnnn.PRm 381
$T OFF.JR(n) 723
$T OFF.JT(n) 730
$T OFF(n).ST 739, 745
$T PRINTERnnn 782
$T PRTnnn 782
$T PUNnn 798
$T Rnnnn.PRm 782
$T Rnnnn.PUm 798
Rnnnn.PUm 389
JOBNAME
$D I 236
$D Init 236
JOBNAME=
$ZAPJOB 849
JOBNUM
$D JOBDEF 258
$T JOBDEF 669
JOBPRTY(n)
$D 260
JOBQ
$A 107
$C 169
$CO 177
$D 244
$DO 321
$E 450
$H 487
$L 508
$O 517
$P 528
$PO 536
$T 653
$TO 714
JOBRBLDQ
$D JOBDEF 258
JOBWARN
$D JOBDEF 258
$T JOBDEF 669
JOEFREE
$D OUTDEF 357
JOENUM
$D OUTDEF 357
$T OUTDEF 760
JOERBLDQ
$D OUTDEF 357
JOEWARN
$D OUTDEF 357
$T OUTDEF 760
JQ
$C 169
$CO 177
$D 244
$DO 321
$E 450
$H 487
$L 508
$O 517
$P 528
$PO 536
$T 653
$TO 714
JQEINDEX=
$ZAPJOB 849
JQEOFF=
$ZAPJOB 849
JRNUM
$D LINE(nnnn) 275
$D NJEDEF 311
JTHRU
$D NETACCT 309
JTNUM
$D LINE(nnnn) 275
$D NJEDEF 311
initialization parameter 126, 684

K

K
$D PRTnnnn 382
$D Rnnnn.PRm 382
$T OUTCLASS(n) 757
$T PRINTERnnn 782
$T PRTnnn 782
$T Rnnnn.PRm 782
KEEP
$T OUTCLASS(n) 757
keyboard 861
Keyword
Display limiting 103
Modification limiting 103
Selection limiting 103

L

L
$D PRTnnnn 383
$D R(nn).RD(mm) 404
$D RDR(nn) 404
$D Rnnnn.PRm 383
$T A 596
$T OUTCLASS(n) 757
LABEL
$D OFFLOAD 351
$T OFFLOAD(n) 753

LASTapar
$D MODULE(jxxxxxxx) 298
LASTART
$D MEMBER 292
LASTPTF
$D MODULE(jxxxxxxx) 299
LASTSVAL
$D SPOOLDEF 419
LEAVE
$T OUTCLASS(n) 757
LENgth
$D LOADMOD(jxxxxxxx) 280
$D MODULE(jxxxxxxx) 299
LGN
$D 282
LGNn
$D U 434
LGNS
$D U 434
licensed documents xv
LIMit
$ADD PRINTER 139
$ADD PRT 139
$D L(nnmm).JT(nnmm) 264
$D L(nnnn).ST(n) 270
$D OFF(n).JT 333
$D OFF(n).ST 346
$D PRTnnnn 381
$D PUNnn 389
$D Rnnnn.PRm 381
$T L(nn).JT(nn) 675
$T L(nnnn).ST(n) 679
$T OFF.JT(n) 730
$T OFF(n).ST 745
$T PRINTERnnn 783
$T PRTnnn 783
$T PUNnn 798
$T Rnnnn.PRm 783
$T Rnnnn.PUm 798
Rnnnn.PUm 389
LIMIT
$D BUFDEF 198
$T BUFDEF 603
$T NJEDEF 699
$T TPDEF 841, 842
line
network job transmitter 126, 684
set characteristic 682
LINE
$ADD APPL 113
$D APPL 195
$D NODE 316
$T APPL 601
$T RMTnn 824
line limit
changing for SYSOUT transmitters 675, 679
displaying for SYSOUT transmitters 270
LINECCHR
$D LINE(nnnn) 275
$T LINE(nnnn) 685
LINECT
$D PRINTDEF 371
$T PRINTDEF 769
LINEn
$D U 434
LINEnnnn
$S
BSC line node communication 573
SNA node communications 576
LINENUM
$D NJEDEF 311
LJ
$ADD REDIRect 150
$T REDIRect 816
LNEn
$D U 434
LNES
$D U 434
Lnnnn.JRn
$C 174
$E 453
$P 532
$S 567
Lnnnn.JTn
$C 174
$E 453
$P 532
$S 567
Lnnnn.SRn
$C 174
$E 453
$P 532
$S 567
Lnnnn.STn
$C 174
$E 453
$P 532
$S 567
LOADmod
$D 279
$D MODULE(jxxxxxxx) 299
LOCAL190
$T RMTnn 824
LOCALNUM
$D DESTDEF 215
LOCKOUT
$D MASDEF 289
$T MASDEF 693
LOG
$ADD LGN 130
$ADD LINE 127
$ADD LNE 127
$ADD LOGON 130
$D LGN 282
$D LINE(nnnn) 275
$D LOGON 282
$D TRACEDEF 432
$T LINE(nnnn) 685
$T LOGON(n) 690
$T TRACEDEF 844

LOG control statement
specifying 8
LOGMODE
$ADD APPL 113
$D APPL 196
$D NODE 316
$T APPL 601
$T NODE(nnnnn) 706
LOGON
$ADD APPL 113
$D 282
$D APPL 196
$D NODE 316
$T APPL 601
$T NODE(nnnnn) 706
$T RMTnn 824
LOGONn
$D U 434
LOGSIZE
$D CKPTDEF 201
Long
$D SPOOL 416
$D I 236
$D Init 236
LONG
$D FSS 233
$D FSSDef 233
$D job 247
$D MODULE(jxxxxxxx) 299
$D pce 367
$D PRTnnnn 381
$D Rnnnn.PRm 381
LookAt message retrieval tool xvi
LRECL
$D PUNnn 389
$T PRINTERnnn 783
$T PRTnnn 783
$T PUNnn 798
$T Rnnnn.PRm 783
$T Rnnnn.PUm 798
Rnnnn.PUm 389
LS
$ADD REDIRect 150
$T REDIRect 816
LT
$ADD REDIRect 150
$T REDIRect 816
LUNAME
$T RMTnn 824

M

M
$D 284
MA
$ADD CONNect 115
$DEL CONNect 439
$T CONNECT 616
MACLevel
$D MODULE(jxxxxxxx) 299
MAILMSG
$D NJEDEF 311
$T NJEDEF 699
Mark
$ADD PRINTER 139
$ADD PRT 139
$D PRTnnnn 381
$D Rnnnn.PRm 381
$T PRINTERnnn 783
$T PRTnnn 783
$T Rnnnn.PRm 783
MASMSG
$D CONDEF 209
$T CONDEF 614
MAXHOP
$D NJEDEF 312
$T NJEDEF 699
MB
$ADD CONNect 115
$DEL CONNect 439
$T CONNECT 616
MBUFSIZE
$D TPDEF 428
mdoule
$D MODULE(jxxxxxxx) 297
MEMB
$DEL CONNect 439
MEMBA
$ADD CONNect 115
$D CONNECT 212
$DEL CONNect 439
$T CONNECT 616
MEMBB
$ADD CONNect 115
$D CONNECT 212
$T CONNECT 616
member
$D MEMBER 292
$E MEMBer 458
MEMBer
$E 458
MEMBER
$D ACTRMT 193
MemberA
$T CONNECT 616
MEMBERA
$ADD CONNect 115
$D CONNECT 212
$DEL CONNect 439
MemberB
$T CONNECT 616
MEMBERB
$ADD CONNect 115
$D CONNECT 212
$DEL CONNect 439
memname
$D A job 187
$D N 303
$D Q 392
$H A 484
$T INTRDR 649

memname *(continued)*
$T MEMBER 696
message retrieval tool, LookAt xvi
MFORM
$T RMTnn 825
MISC
$T DEBUG 619
mm
$E MEMBer 459
$P LOGON 534
$T OFF.JR 723
$T OFF.JT 729
MOD
$D OFF(n).JR 329
$D OFF(n).JT 329
$D OFF(n).SR 329
$D OFF(n).ST 329, 338
$T OFF.JR(n) 724
$T OFF(n).ST 739
DETails
$D pce 367
MODE
$ADD PRINTER 139
$ADD PRT 139
$D CKPTDEF 201
$D PRTnnnn 381
$D Rnnnn.PRm 381
$T PRINTERnnn 783
$T PRTnnn 783
$T Rnnnn.PRm 783
MODIFY
$D PRTnnnn 381
$D Rnnnn.PRm 381
MODLUE
$D SSI(nnn) 422
MPRO
$ADD PRT 140
MRF2780
$T RMTnn 825
MSGclass
$D R(nn).RD(mm) 404
$D RDI 400
$D RDR(nn) 404
$T RDRnn 808
$T Rnnnnn.RDm 808
MSGPRT
$T RMTnn 825
MULTILV
$T RMTnn 825
MVS commands
DISPLAY example 846
VARY example 846

N

n
$D L(nnmm).JT(n) 264
$D L(nnnn).ST(n) 270
$D PATH 362
$D L(nnnn).SR(n) 267
$T JOBPRTY 673
n *(continued)*
$T LOGON 689
$T MEMBER 696
$T OUTPRTY 763
$Z OFFLOAD 853
N
$D 303
$S
BSC line node communication 573
SNA node communications 576
$S LINEnnnn
BSC line node communication 573
$S N LINEnnnn
SNA node communications 576
n-n
$T MEMBER 696
NA
$ADD CONNect 115
$D CONNECT 212
$DEL CONNect 439
$T CONNECT 617
NACCT
$D NETACCT 309
name
$G A 470
$G C 472
$G D 474
$G H 476
$G R,XEQ 482
DETails
$D pce 367
NAME
$D COMPACT 206
$D MEMBER 293
$D NODE 316
$D PRTnnnn 381
$D Rnnnn.PRm 381
$T INIT 644
$T NODE(nnnnn) 706
NAME parameter
on PROCLIB statement 773
NB
$ADD CONNect 116
$D CONNECT 212
$DEL CONNect 439
$T CONNECT 617
Ndest
$D DESTDEF 215
NDISP
$DO Job 324
Net
$T NODE(nnnnn) 705
NETACCT
$D 309
network
job transmitter quantity 126, 684
SYSOUT transmitter quantity 128, 686
NEWCKPTn
$D CKPTDEF 201
$T CKPTDEF 607

NEWPAGE
$ADD PRINTER 140
$ADD PRT 140
$D PRINTDEF 371
$D PRTnnnn 381
$D Rnnnn.PRm 381
$T PRINTDEF 769
$T PRINTERnnn 784
$T PRTnnn 784
$T Rnnnn.PRm 784
NIFCB
$D PRINTDEF 371
NIFLASH
$D PRINTDEF 371
NIUCS
$D PRINTDEF 371
nn
$D MEMBER 292
$E LOGON 457
$M ‘command’ 511
$P LOGON 534
$P TRACE 552
$S 565
$S LGN 571
$S LOGON 571
$S RMT 587
$S TRACE 592
$T EXIT 640
$T OFF.JR 723
$T OFF.JT 729
$T REDIRect 816
nnmm
$D L(nnmm).JT(n) 264
$D L(nnnn).JR(n) 261
$D L(nnnn).ST(n) 270
$D L(nnnn).SR(n) 267
nnnn
$D ACTRMT 193
$D LINE(nnnn) 274
$D NODE 315
$E LINE 455
$E LNE 455
$F PUNnn 468
$F Rnnnn.PUm 468
$P LINE 533
$P RMT 548
$S LINE(nnnn) 569
$T LINE(nnnn) 125, 683
nnnn,C
$F PUNnn 468
$F Rnnnn.PUm 468
nnnnn
$T NODE 704
Nnnnn
$G A 470
$G C 472
$G D 474
$G H 476
$G R,XEQ 482
node
command authority 705
node *(continued)*
set authority 705
NODE
$ADD APPL 113
$D APPL 196
$T APPL 601
NODEA
$ADD CONNect 115
$D CONNECT 212
$DEL CONNect 439
$T CONNECT 617
NODEB
$ADD CONNect 116
$D CONNECT 212
$DEL CONNect 439
$T CONNECT 617
NODELAY
$D JOBDEF 257
NODENAME
$D DESTDEF 215
nodenamenode
$D PATH 362
NODENUM
$D NJEDEF 312
NOLIST start option
specifying NOLOG 8
NOLOG start option
specifying CKPT1 8
NONE start option
specifying 8
NOREQ start option
specifying NOLIST 8
NOTify
$D OFF(n).JT 333
$D OFF(n).SR 330
$D OFF(n).ST 330, 339, 346
$T OFF.JR(n) 724
$T OFF.JT(n) 730
$T OFF(n).ST 739, 745
NOTIFY
$D OFF(n).JR 330
$D OFF(n).JT 330
NPRO
$ADD PRINTER 140
$D PRTnnnn 381
$D Rnnnn.PRm 381
$T PRINTERnnn 784
$T PRTnnn 784
$T Rnnnn.PRm 784
NTHRU
$D NETACCT 309
NUM
$D ESTBYTE 220
$D ESTIME 224
$D ESTLNCT 221
$D ESTPAGE 222
$D ESTPUN 223
$T ESTBYTE 630
$T ESTIME 632
$T ESTLNCT 634
$T ESTPAGE 636

NUM *(continued)*
$T ESTPUN 638
NUMBER
$D COMPACT 206
NUMPRt
$T RMTnn 826
NUMPUn
$T RMTnn 826
NUMRDr
$T RMTnn 826

O

O
$D OFF(n).ST 338, 345
$D PRTnnnn 380
$D Rnnnn.PRm 380
$DO Job 324
$G A 470
$G C 472
$G D 474
$G H 476
$G R,OUT 479
$G R,XEQ 482
$T OFF(n).ST 738, 745
OFFLOADn
$P 543
$S 580
OFFn.JR
$C 182
$P 541
$S 578
OFFn.JT
$C 182
$E 462
$P 541
$S 578
OFFn.SR
$C 182
$P 541
$S 578
OFFn.ST
$C 182
$E 462
$P 541
$S 578
OFFS
$D job 247
$D U 434
$DO Job 324
$T JOB 654
$TO JOB 717
OPT
$D ESTBYTE 220
$D ESTIME 224
$D ESTLNCT 221
$D ESTPAGE 222
$D ESTPUN 223
$T ESTBYTE 630
$T ESTIME 632
$T ESTLNCT 634
OPT *(continued)*
$T ESTPAGE 636
$T ESTPUN 638
OPVERIFY
$D CKPTDEF 202
$T CKPTDEF 607
OUT
$G R 479
OUTDisp
$D L(nnnn).ST(n) 270
$D OFF(n).ST 339, 340, 346
$D OUTCLASS 355
$R 556
$T OFF(n).ST 739
$T OUTCLASS(n) 756
OUTDISP
$DO Job 324
$T L(nnnn).ST(n) 679
$T OFF(n).ST 745
$TO JOB 716
OUTGrp
$CO 180
$DO Job 324
$O Job 518
$PO job 538
$TO JOB 716
OUTNUM
$D PCEDEF 370
output
$DO Job 321
$O 516
conditional purge
$D JOBCLASS command 251
OUTPUT
$D OUTCLASS 355
OUTTIME
$D OUTDEF 358
$T OUTDEF 760
OWNER
$D RDI 400
OWNMEMB
$D MASDEF 289
OWNNAME
$D NJEDEF 312
OWNNODE
$D NJEDEF 312
OWNSID
$D MASDEF 289

P

P
$D R(nn).RD(mm) 404
$D RDR(nn) 404
$S LINEnnnn
BSC line node communication 573
$S SPL 589
$S SPOOL 589
$T OUTCLASS(n) 757
$T RDRnn 808
$T Rnnnnn.RDm 808

P *(continued)*
$TO JOB 717
PAGE
$D OUTPRTY 360
$T OUTPRTY(n) 763
page limit
changing for SYSOUT transmitters 679
displaying for SYSOUT transmitters 270
pages
$F PRTnnnn 465
PAGEs
$TO JOB 717
PAGES
$CO 180
$D TRACEDEF 432
$O Job 518
$PO job 538
parameter
JES2 initialization
JTNUM on LINE(nnnnn) 126, 684
STNUM on LINE(nnnnn) 128, 686
PARTNUM
$D INITDEF 234
Password
$ADD LGN 130
$ADD LINE 127
$ADD LNE 127
$ADD LOGON 130
$D LGN 282
$D LINE(nnnn) 275
$D LOGON 282
$D NODE 316
$T LINE(nnnn) 685
$T LOGON(n) 690
$T NODE(nnnnn) 707
$T RMTnn 827
PATH
$D 362
$D NJEDEF 312
PATHMGR
$D CONNECT 212
$D NODE 316
$T CONNECT 617
$T NODE(nnnnn) 708
Pause
$ADD PRINTER 140
$ADD PRT 140
$D PRTnnnn 381
$D PUNnn 389
$D Rnnnn.PRm 381
$T PUNnn 798
$T Rnnnn.PUm 798
Rnnnn.PUm 389
pce
$D 365
$T 765
pcetype
DETails
$D pce 367
PENCRYPT
$D NODE 316
PENCRYPT *(continued)*
$T NODE(nnnnn) 708
Percent
$H JOB 488
PERCENT
$D SPOOL 416
PLIM
$ADD PRINTER 140
$ADD PRT 140
$D OFF(n).ST 346
$D PRTnnnn 381
$D Rnnnn.PRm 381
$T L(nnnn).ST(n) 679
$T OFF(n).ST 746
$T PRINTERnnn 784
$T PRTnnn 784
$T Rnnnn.PRm 784
PRESELCT
$ADD PRINTER 140
$ADD PRT 140
$D PRTnnnn 381
$D Rnnnn.PRm 381
$T PRINTERnnn 784
$T PRTnnn 784
$T Rnnnn.PRm 784
PRIMARY
$ADD DEStid 120
$D DEStid 217
$T DEStid(vvvvvvvv) 627
PRINTDEF
$D 371
printer
WS criteria 793
PRinter
$T 778
PRIOINC
$D R(nn).RD(mm) 404
$D RDR(nn) 404
$T RDRnn 808
$T Rnnnnn.RDm 808
PRIOLIM
$D R(nn).RD(mm) 404
$D RDR(nn) 404
$T RDRnn 808
$T Rnnnnn.RDm 808
Priority
$D job 247
$T JOB 654
PRIORITY
$D JOBPRTY(n) 260
$D OUTPRTY 360
$DO Job 324
$T JOBPRTY(n) 673
$T OUTPRTY(n) 763
$TO JOB 717
PRIVATE
$D CONNECT 212
$D NODE 316
$T NODE(nnnnn) 708
PRmode
$DO Job 324

PRMode
$ADD PRINTER 141
$ADD PRT 141
$D OFF(n).ST 339, 340, 346
$D PRTnnnn 381
$D PUNnn 390
$D Rnnnn.PRm 381
$T OFF(n).ST 739, 746
$T PRINTERnnn 785
$T PRTnnn 785
$T PUNnn 798
$T Rnnnn.PRm 785
$T Rnnnn.PUm 798
$TO JOB 717
Rnnnn.PUm 390
PROC
$ADD FSS 123
$D FSS 233
$D FSSDef 233
$D PRTnnnn 381
$D Rnnnn.PRm 381
$T FSS 642
processor
trace
$T PCE command 765
PROTECT
$D OFFLOAD 351
$T OFFLOAD(n) 753
PROTected
$C 171
$CO 180
$O Job 518
$P job 529
$PO job 538
PRT
$R 554
PRTDEST
$D R(nn).RD(mm) 404
$D RDI 400
$D RDR(nn) 404
$T RDRnn 808
$T Rnnnnn.RDm 808
PRTnnnn
$C 184
$D 379
$E 463
$F 466
$I 505
$N 514
$P 544
$S 582
$Z 854
PRTS
$D U 435
PRTYHIGH
$D JOBDEF 258
$D OUTDEF 358
$T JOBDEF 669
$T OUTDEF 760
PRTYINC
$D INTRDR 240
PRTYINC *(continued)*
$T INTRDR 648
PRTYJECL
$D JOBDEF 258
$T JOBDEF 670
PRTYJOB
$D JOBDEF 258
$T JOBDEF 670
PRTYLIM
$D INTRDR 240
$T INTRDR 648
PRTYLOW
$D JOBDEF 258
$D OUTDEF 358
$T JOBDEF 670
$T OUTDEF 760
PRTYOUT
$D OUTDEF 358
$T OUTDEF 761
PRTYRATE
$D JOBDEF 258
$T JOBDEF 670
PRWIDTH
$T PRINTERnnn 785
$T PRTnnn 785
$T Rnnnn.PRm 785
PRYORATE
$D OUTDEF 358
$T OUTDEF 761
PSONUM
$D PCEDEF 370
PUN
$R 554
punch
WS criteria 801
PUNCHDEF
$D 386
PUNDEST
$D R(nn).RD(mm) 404
$D RDI 400
$D RDR(nn) 404
$T RDRnn 809
$T Rnnnnn.RDm 809
PUNnn
$C 185
$D 389
$E 464
$F 468
$N 515
$P 546
$S 584
$T 796
$Z 855
PUNnnnn
$I 507
PUNS
$D U 435
Purge
$C 171
PURGE
$D job 247

PURGE *(continued)*
$T OUTCLASS(n) 757
PURGENUM
$D PCEDEF 370

Q

Q
$D 392
$D R(nn).RD(mm) 404
$D RDI 400
$D RDR(nn) 404
$R 554
$T RDRnn 808
$T Rnnnnn.RDm 808
$TO JOB 717
Q=CNV
$D N 305
$D Q 394
Q=HOLD
$D N 306
$D Q 394
Q=OUT
$D N 306
$D Q 394
Q=PPU
$D N 306
$D Q 394
Q=XEQ
$D N 305
$D Q 394
Q=XMT
$D N 306
$D Q 394
QREBUILD
$D MASDEF 289
QUESHELD
$D MASDEF 289
Queue
$A 108
$ADD PRINTER 138
$ADD PRT 138
$C 171
$CO 180
$D job 247
$D OFF(n).ST 339, 340, 346
$D PRTnnnn 380
$D PUNnn 389
$D Rnnnn.PRm 380
$H JOB 488
$O Job 519
$P job 529
$PO job 539
$T JOB 655
$T OFF(n).ST 740, 746
$T PRINTERnnn 785
$T PRTnnn 785
$T PUNnn 799
$T Rnnnn.PRm 785
$T Rnnnn.PUm 799
Rnnnn.PUm 389
QUEUE
$DO Job 324
$TO JOB 717
QUICK
$P JES2 524

R

R
$D F 228
$D M 286
$D N 304
$D Q 392
$G R,OUT 479
$R 555
$R XEQ 559
$T PRINTERnnn 782
$T PRTnnn 782
$T PUNnn 799
$T Rnnnn.PRm 782
$T Rnnnn.PUm 799
RANGE
$ADD PRINTER 141
$ADD PRT 141
$D JOBDEF 258
$D OFF(n).JR 330
$D OFF(n).JT 330, 333
$D OFF(n).SR 330
$D OFF(n).ST 330, 340, 346
$D PRTnnnn 382
$D PUNnn 390
$D Rnnnn.PRm 382
$T JOBDEF 670
$T OFF.JR(n) 724
$T OFF.JT(n) 730
$T OFF(n).ST 746
$T PRINTERnnn 786
$T PRTnnn 786
$T PUNnn 800
$T Rnnnn.PRm 786
$T Rnnnn.PUm 800
Rnnnn.PUm 390
RASSIGN
$D JOBDEF 258
$T JOBDEF 671
RDBLBUFR
$D PRINTDEF 371
$D PUNCHDEF 386
Rdest
$D DESTDEF 215
RDINUM
$D INTRDR 240
RDIRAREA
$D CONDEF 209
$T CONDEF 614
RDRCHAR
$D CONDEF 209
$T CONDEF 614
RDRnn
$C 186
$D 403

RDRnn *(continued)*
$P 547
$S 586
$T 810
$Z 856
RDRS
$D U 435
reader
command authority
$T RDRnn command 806
halt $Z RDRnn 856
Ready
$L job 509
READY
$CO 180
$DO Job 324
$PO job 539
$TO JOB 717
REBUILD
$A 108
$C 171
$CO 180
$D job 247
$DO Job 324
$E Job 451
$H JOB 488
$O Job 519
$P job 529
$PO job 539
$T JOB 655
$TO JOB 717
RECeive
$D NODE 316
$T NODE(nnnnn) 708
RECEIVE
$S OFFLOADn 580
RECFM
$T RMTnn 827
RECONFIG
$D CKPTDEF 202
$T CKPTDEF 608
RECONFIG start option
specifying HASPPARM=ddname 8
RECORD
$D OUTPRTY 360
$T OUTPRTY(n) 763
RECords
$DO Job 324
$TO JOB 717
RECORDS
$O Job 519
$PO job 539
RECVopts(*)
$D 408
RECVopts(type)
$D 408
redirect
$T REDIRect 816
REL
$TO JOB 717
RELADDR
$D SPOOLDEF 420
RELease
$TO JOB 717
RESET
$D CONNECT 212
$T PRINTERnnn 782
$T PRTnnn 782
$T Rnnnn.PRm 782
RESETBY
$D MEMBER 293
REST
$ADD APPL 114
$ADD LINE 127
$ADD LNE 127
$D APPL 196
$D CONNECT 212
$D LINE(nnnn) 275
$D NODE 317
$T APPL 601
$T CONNECT 617
$T LINE(nnnn) 685
$T NODE(nnnnn) 708
RESTART
$D MASDEF 289
$T MASDEF 693
RESTMAX
$D NJEDEF 312
$T NJEDEF 700
RESTNODE
$D NJEDEF 312
$T NJEDEF 700
RESTTOL
$D NJEDEF 312
$T NJEDEF 700
RETPD
$D OFFLOAD 351
$T OFFLOAD(n) 753
RMdest
$D DESTDEF 215
RMODE
$D LOADMOD(jxxxxxxx) 280
RMT
$D U 435
RMT150
$T RMTnn 827
RMTdest
$D DESTDEF 215
RMTMSG
$D TPDEF 428
$T TPDEF 842
RMTn-*
$D U 435
RMTn-n
$D U 435
RMTNUM
$D TPDEF 428
RMTS
$D U 435
RMTSHARE
$D LINE(nnnn) 275

Rnn.CONmm
$D 397
Rnn.RDmm
$D 404
Rnnnn
$C 170
Rnnnn.PRm
$C 184
$D 379
$E 463
$F 466
$I 505
$N 514
$P 544
$S 582
$T 778
$Z 854
Rnnnn.PUm
$C 185
$E 464
$F 468
$I 507
$N 515
$P 546
$S 584
$T 796
$Z 855
Rnnnn.RDm
$C 186
$P 547
$S 586
$T 810
Route
$TO JOB 714
Routecde
$ADD PRINTER 141
$ADD PRT 141
$CO 178
$D OFF(n).JR 330
$D OFF(n).JT 330, 333
$D OFF(n).SR 330
$D OFF(n).ST 330, 339, 341, 347
$D PRTnnnn 382
$D PUNnn 390
$D Rnnnn.PRm 382
$DO Job 322
$O Job 517
$PO job 536
$T OFF.JR(n) 724, 725
$T OFF.JT(n) 730
$T OFF(n).ST 740, 746
$T PRINTERnnn 785
$T PRTnnn 785
$T PUNnn 799
$T RMTnn 827
$T Rnnnn.PRm 785
$T Rnnnn.PUm 799
Rnnnn.PUm 390
ROUtines
$D EXIT 226
$D LOADMOD(jxxxxxxx) 280
ROUtines *(continued)*
$D MODULE(jxxxxxxx) 299
ROUTINES
$D MODULE(jxxxxxxx) 299
RSVHELD
$D MASDEF 289

S

S
$D A job 187
$G A 470
$G C 472
$G D 474
$G H 476
$G R,OUT 479
$R 554
$T INTRDR 648
$T RDRnn 809
$T Rnnnnn.RDm 809
SCHENV
$D job 248
$D OFF(n).JT 334
$T JOB 655
$T OFF(n).JR 725, 730
$T OFF(n).JT 725, 730
SCHENV_AFF
$D job 248
SECLABEL
$D job 248
$DO Job 324
$T JOB 655
$TO JOB 717
SECURITY
$T DEBUG 619
SEGLIM
$D OUTDEF 358
$T OUTDEF 761
SELECT
$T PRINTERnnn 786
$T PRTnnn 786
$T PUNnn 800
$T Rnnnn.PRm 786
$T Rnnnn.PUm 800
SENTREST
$D NODE 317
$T NODE(nnnnn) 709
Sep
$ADD PRINTER 142
$ADD PRT 142
$D PRTnnnn 382
$D PUNnn 390
$D Rnnnn.PRm 382
$T PRINTERnnn 786
$T PRTnnn 786
$T PUNnn 800
$T Rnnnn.PRm 786
$T Rnnnn.PUm 800
Rnnnn.PUm 390
SEPCHARS
$ADD PRINTER 142

SEPCHARS *(continued)*
$ADD PRT 142
$D PRTnnnn 382
$D Rnnnn.PRm 382
$T PRINTERnnn 787
$T PRTnnn 787
$T Rnnnn.PRm 787
SEPDS
$ADD PRINTER 142
$ADD PRT 142
$D PRTnnnn 382
$D PUNnn 390
$D Rnnnn.PRm 382
$T PRINTERnnn 787
$T PRTnnn 787
$T PUNnn 800
$T Rnnnn.PRm 787
$T Rnnnn.PUm 800
Rnnnn.PUm 390
SEPPAGE
$D PRINTDEF 372
$T PRINTDEF 769
SEQ
DETails
$D pce 367
SESsions
$D LGN 283
$D LINE(nnnn) 276
$D LOGON 283
SESSIONS
$D TPDEF 428
$T TPDEF 842
SETUP
$ADD PRINTER 142
$ADD PRT 142
$D PRTnnnn 382
$D PUNnn 390
$D Rnnnn.PRm 382
$T PRINTERnnn 787
$T PRTnnn 787
$T PUNnn 800
$T RMTnn 827
$T Rnnnn.PRm 787
$T Rnnnn.PUm 800
Rnnnn.PUm 390
SHARable
$T RMTnn 828
SHARED
$D MASDEF 290
$T MASDEF 693
shortcut keys 861
SHOWUSER
$D DESTDEF 215
$T DESTDEF 622
SIZE
$T TRACEDEF 844
SLEVEL
$D MEMBER 293
$E MEMBer 459
$T MEMBER 696
SMFDEF
$D 413
SNA NJE
LINE parameter 601
SNABUF
$D TPDEF 428
$T TPDEF 841
SPACE
$D PRTnnnn 382
$D Rnnnn.PRm 382
$T PRINTERnnn 782
$T PRTnnn 782
$T Rnnnn.PRm 782
SPEED
$ADD LINE 127
$ADD LNE 127
$D LINE(nnnn) 276
$T LINE(nnnn) 685
SPIN
$T JOB 656
$T TRACEDEF 844
SPINNABLE
$D job 248
SPINNUM
$D PCEDEF 370
SPL
$A 108
$C 171
$D job 248
$E Job 451
$H JOB 488
$P job 530
$T JOB 656
$Z 857
SPLevel
$D LOADMOD(jxxxxxxx) 280
$D MODULE(jxxxxxxx) 299
SPLEVEL
$D EXIT 226
SPOOL
$A 108
$C 171
$D job 248
$D OPTSDEF 353
$E Job 451
$H JOB 488
$P job 530
$T JOB 656
$Z 857
SPOOLNUM
$D SPOOLDEF 420
$T SPOOLDEF 837
SRNUM
$D LINE(nnnn) 276
$D NJEDEF 312
SRVCLASS
$D job 248
$D OFF(n).JT 334
$T JOB 656
$T OFF(n).JR 725, 730
$T OFF(n).JT 725, 730

SSI(*)
$D 422
$T 839
SSI(nnn)
$D 422
$T 839
SSNAME
$D MEMBER 293
STACNUM
$D PCEDEF 370
START
$D OFF(n).JR 330
$D OFF(n).JT 330, 334
$D OFF(n).SR 330
$D OFF(n).ST 330, 343, 348
$D TRACE(nnn) 430
$T TRACEDEF 844
start option
specifying 6
specifying $P JES2 8
specifying CKPT1 8
specifying COLD 8
specifying CONSOLE 8
specifying FORMAT 8
specifying HASPPARM=ddname 8
specifying NOLIST 8
specifying NONE 8
specifying NOREQ 8
specifying RECONFIG 8
STARTIME
$D MEMBER 293
STARTopt
$D OPTSDEF 353
STARTYPE
$D MEMBER 292
$D OPTSDEF 353
STATE
$D CONNECT 213
STATIC
$D CONNECT 213
STATS
$D TRACEDEF 432
STATUS
$D APPL 196
$D CONNECT 213
$D DEStid 218
$D EXIT 226
$D L(nnmm).JT(n) 264
$D L(nnnn).JR(n) 261
$D L(nnnn).ST(n) 271
$D LGN 283
$D LINE(nnnn) 276
$D LOGON 283
$D MEMBER 293
$D NODE 317
$D OFF(n).JR 330
$D OFF(n).JT 330, 334
$D OFF(n).SR 330
$D OFF(n).ST 330, 342, 348
$D OFFLOAD 351
$D PRTnnnn 382
STATUS *(continued)*
$D PUNnn 390
$D R(nn).RD(mm) 404
$D RDR(nn) 404
$D Rnn.CONmm 397
$D Rnnnn.PRm 382
$D SPOOL 416
$D I 236
$D Init 236
$D L(nnnn).SR(n) 267
$E MEMBer 459
$P Inn 522
$P Inn-mm 522
$S I(vvvv) 563
$S init(vvvv) 563
$T APPL 601
$T EXIT(nn) 640
$T INIT 644
$T MEMBER 696
$Z Initvvvv 851
$Z Ivvvv 851
Rnnnn.PUm 390
Stc
$A 107
$C 169
$CO 177
$D 244
$DO 321
$E 450
$H 487
$L 509
$O 517
$P 528
$PO 536
$T 653
$TO 714
STC
$D A job 187
$D I 237
$D Init 237
$G H 476
$G R,OUT 479
$P I 523
$S I(vvvv) 564
$S init(vvvv) 564
$T INIT 645
$Z Initvvvv 852
$Z Ivvvv 852
STCn
$G A 470
$G C 472
$G D 474
$R 554
STDFORM
$D OUTDEF 358
STNUM
$D LINE(nnnn) 276
$D NJEDEF 312
initialization parameter 128, 686
STORage
$D LOADMOD(jxxxxxxx) 280

STORAGE
$T DEBUG 619
STRname
$T CKPTDEF 607
SUBnet
$D NODE 317
$T NODE(nnnnn) 709
subnetname
$D 425
SUSPEND
$D PRTnnnn 382
$D Rnnnn.PRm 382
$T PRINTERnnn 787
$T PRTnnn 787
$T PUNnn 800
$T Rnnnn.PRm 787
$T Rnnnn.PUm 800
SYMREC
$T DEBUG 620
SYNCTOL
$D MASDEF 290
$T MASDEF 693
syntax diagrams
how to read 101
Sysaff
$D INTRDR 240
$D job 248
$D R(nn).RD(mm) 404
$D RDI 400
$D RDR(nn) 404
$T INTRDR 648
$T JOB 656
$T RDRnn 809
$T Rnnnnn.RDm 809
SYSaff
$D OFF(n).JR 331
$D OFF(n).JT 331, 334
$D OFF(n).SR 331
$D OFF(n).ST 331
$T OFF.JR(n) 724, 725
$T OFF.JT(n) 731
SYSAFF
$D SPOOL 416
$S SPL 589
$S SPOOL 589
$T SPL 834
$T SPOOL 834
SYSNAME
$D MEMBER 294
$E MEMBer 460
$T MEMBER 697
System
$T INTRDR 648
$T NODE(nnnnn) 705
$T RDRnn 807
$T Rnnnnn.RDm 807

T

T
$ADD PRINTER 142
T *(continued)*
$ADD PRT 142
$D OFF(n).ST 339, 343, 348
$D PRTnnnn 383
$D Rnnnn.PRm 383
$DO Job 324
$G A 470
$G C 472
$G D 474
$G H 476
$G R,OUT 479
$R 554
$T A 596
$T OFF(n).ST 741, 747
$T PRINTERnnn 787
$T PRTnnn 787
$T Rnnnn.PRm 787
$TO JOB 718
TABFREE
$D TRACEDEF 432
TABLES
$D TRACEDEF 433
$T TRACEDEF 844
TABWARN
$D TRACEDEF 433
$T TRACEDEF 845
TERM
$P JES2 525
TGINSUE
$D SPOOL 416
TGNUM
$D SPOOL 416
Tgs
$H JOB 488
TGSIZE
$D SPOOLDEF 420
$T SPOOLDEF 837
TGSPACE
$D SPOOLDEF 420
$T SPOOLDEF 837
TIME
$D CONNECT 213
$D JOBPRTY(n) 260
$D MEMBER 294
$T JOBPRTY(n) 673
$T NJEDEF 700
DETails
$D pce 367
TIMEtol
$D NJEDEF 312
TP
$D U 435
TPDEF
$D 427
TR
$T EXIT(nn) 640
$T INTRDR 649
Trace
$T PCE 766
TRace
$ADD PRINTER 143

TRace *(continued)*
$ADD PRT 143
$D EXIT 226
$D INTRDR 240
$D NODE 317
$D pce 367
$D PRTnnnn 383
$D PUNnn 390
$D R(nn).RD(mm) 404
$D RDI 400
$D RDR(nn) 404
$D Rnnnn.PRm 383
$D SSI(nnn) 422
$T NODE(nnnnn) 709
$T PRINTERnnn 788
$T PRTnnn 788
$T PUNnn 801
$T RDRnn 810
$T Rnnnn.PRm 788
$T Rnnnn.PUm 801
$T Rnnnnn.RDm 810
$T SSI(*) 839
$T SSI(nnn) 839
Rnnnn.PUm 390
trace identifier
identifier 552
TRace(nnn)
$D 430
TRACEDEF
$D 432
Traceio
$ADD LGN 130
$ADD LOGON 130
TRaceio
$ADD LINE 128
$ADD LNE 128
$D LGN 283
$D LINE(nnnn) 276
$D LOGON 283
$T LINE(nnnn) 686
$T LOGON(n) 690
track group
spool volume
$T SPOOLDEF command 836
TRANS
$ADD PRINTER 143
$ADD PRT 143
$D PRINTDEF 372
$D PRTnnnn 383
$D Rnnnn.PRm 383
$T PRINTERnnn 788
$T PRTnnn 788
$T Rnnnn.PRm 788
TRAnsmit
$D NODE 317
$T NODE(nnnnn) 709
TRANSMIT
$S OFFLOADn 580
TRANSPAR
$ADD LINE 128
$ADD LNE 128
TRANSPAR *(continued)*
$D LINE(nnnn) 276
$T LINE(nnnn) 686
$T RMTnn 828
TRKCELL
$ADD PRINTER 143
$ADD PRT 143
$D OUTCLASS 356
$D PRTnnnn 383
$D Rnnnn.PRm 383
$D SPOOLDEF 420
$T PRINTERnnn 788
$T PRTnnn 788
$T Rnnnn.PRm 788
TRKPERTGB
$D SPOOL 417
TSOavail
$DO Job 325
$TO JOB 718
Tsu
$C 170
$CO 177
$D 244
$DO 321
$E 450
$H 487
$L 509
$O 517
$P 528
$PO 536
$T 653
$TO 714
TSU
$G H 476
$G R,OUT 479
TSUn
$G A 470
$G C 472
$G D 474
$R 554
type
$T RECVopts 813
TYPE
$A 108
$C 172
$D job 248
$D NETACCT 309
$D OFFLOAD 351
$E Job 451
$H JOB 488
$P job 530
$S OFFLOADn 580
$T JOB 656

U

U
$D 434
$D R(nn).RD(mm) 404
$D RDR(nn) 404
$T RDRnn 809

U *(continued)*
$T Rnnnnn.RDm 809
UCS
$ADD PRINTER 142
$ADD PRT 142
$D OFF(n).ST 339, 343, 348
$D PRINTDEF 372
$D PRTnnnn 383
$D Rnnnn.PRm 383
$DO Job 324
$T OFF(n).ST 741, 747
$T PRINTERnnn 787
$T PRTnnn 787
$T Rnnnn.PRm 787
$TO JOB 718
UCSVerfy
$ADD PRINTER 143
$ADD PRT 143
$D PRTnnnn 383
$D Rnnnn.PRm 383
$T PRINTERnnn 788
$T PRTnnn 788
$T Rnnnn.PRm 788
Udest
$D DESTDEF 215
UNCONDitional parameter
on PROCLIB statement 772
UNIT
$ADD LINE 128
$ADD LNE 128
$ADD PRINTER 144
$ADD PRT 144
$D L(nnmm).JT(n) 265
$D L(nnnn).JR(n) 262
$D L(nnnn).ST(n) 271
$D LINE(nnnn) 276
$D PRTnnnn 383
$D PUNnn 391
$D Rnnnn.PRm 383
$D L(nnnn).SR(n) 268
$T LINE(nnnn) 687
$T OFFLOAD(n) 753
$T PRINTERnnn 789
$T PRTnnn 789
$T PUNnn 801
$T RDRnn 810
$T Rnnnn.PRm 789
$T Rnnnn.PUm 801
$T Rnnnn.RDm 810
Rnnnn.PUm 391
UNIT parameter
on PROCLIB statement 772
UNITDATA
$D SPOOL 417
USECOUNT
$D EXIT 226
USERID
$D job 248
$DO Job 325
$T JOB 656
$TO JOB 718
USERSET
$D OUTDEF 358
UVERSION
$D MODULE(jxxxxxxx) 300

V

V
$D A job 188
$D N 304
$D Q 392
VALIDATE
$D OFFLOAD 351
$T OFFLOAD(n) 754
VERSION
$D MEMBER 294
$D MODULE(jxxxxxxx) 300
$E MEMBer 460
$T MEMBER 697
VERSIONS
$D CKPTDEF 202
$T CKPTDEF 609
VOLATILE
$D CKPTDEF 202
$T CKPTDEF 609
VOLS
$D OFFLOAD 351
$T OFFLOAD(n) 754
volser
$S SPL 590
$S SPOOL 590
$T SPL 834
$T SPOOL 834
VOLser
$T CKPTDEF 607
VOLser parameter
on PROCLIB statement 772
Volume
$ADD PRINTER 144
$ADD PRT 144
$D OFF(n).JT 334
$D OFF(n).ST 348
$D PRTnnnn 383
$D PUNnn 391
$D Rnnnn.PRm 383
$D SPOOL 417
$D SPOOLDEF 420
$P SPOOL 549
$T OFF.JT(n) 731
$T OFF(n).ST 747
$Z SPL 857
$Z SPOOL 857
Rnnnn.PUm 391
VOLUME
$T PRINTERnnn 789
$T PRTnnn 789
$T PUNnn 801
$T Rnnnn.PRm 789
$T Rnnnn.PUm 801
$T SPOOLDEF 837

Volumes
$H JOB 488

W

W
$T OUTCLASS(n) 757
WAITIME
$T RMTnn 828
warm start
specifying 8
WARMTIME
$D MASDEF 290
WARN
$D BUFDEF 198
$T BUFDEF 603
$T NJEDEF 699
$T TPDEF 841, 842
WRITE
$T OUTCLASS(n) 757
Writer
$ADD PRINTER 144
$ADD PRT 144
$D OFF(n).ST 339, 343, 348
$D PRTnnnn 383
$D PUNnn 391
$D Rnnnn.PRm 383
$DO Job 325
$T OFF(n).ST 741, 748
$T PRINTERnnn 789
$T PRTnnn 789
$T PUNnn 801
$T Rnnnn.PRm 789
$T Rnnnn.PUm 801
Rnnnn.PUm 391
WS
$ADD PRINTER 144
$ADD PRT 144
$D L(nnmm).JT(n) 265
$D OFF(n).JR 331
$D OFF(n).JT 331, 334
$D OFF(n).SR 331
$D OFF(n).ST 331, 343, 349
$D PRTnnnn 383
$D PUNnn 391
$D Rnnnn.PRm 383
$T L(nn).JT(nn) 675
$T L(nnnn).ST(n) 679
$T OFF.JR(n) 725
$T OFF.JT(n) 731
$T OFF(n).ST 748
$T PRINTERnnn 789
$T PRTnnn 789
$T PUNnn 801
$T Rnnnn.PRm 789
$T Rnnnn.PUm 801
display remote punch 391
Rnnnn.PUm 391
WS criteria
off.jr 725
off.jt 731
WS criteria *(continued)*
off.st 675, 679, 748
punch 801
remote printer 383
set printer 793

X

X
$D A job 187
$T PRINTERnnn 790
$T PRTnnn 790
$T Rnnnn.PRm 790
X1-4
$D PRTnnnn 379
$D Rnnnn.PRm 379
XCFGRPNM
$D MASDEF 290
XEQ
$D A job 187
$G R 481
$P 553
$R 559
Xeqdest
$D R(nn).RD(mm) 404
$D RDR(nn) 404
$T RDRnn 810
$T Rnnnn.RDm 810
XEQNode
$A 108
$C 172
$H JOB 488
$P job 530
$T JOB 656
XEQNODE
$D job 248
xx*
$T NODE 704
xxxxxxx
$D DEStid 217
xxxxxxxx
$D NODE 315
$DEL DEStid 441
$T DEStid 624
$T NODE 704

Y

Y
$D PRTnnnn 381
$D Rnnnn.PRm 381

Z

Z
$S SPL 590
$S SPOOL 590

Readers' Comments — We'd Like to Hear from You

z/OS
JES2 Commands

Publication No. SA22-7526-03

Overall, how satisfied are you with the information in this book?

	Very Satisfied	Satisfied	Neutral	Dissatisfied	Very Dissatisfied
Overall satisfaction	☐	☐	☐	☐	☐

How satisfied are you that the information in this book is:

	Very Satisfied	Satisfied	Neutral	Dissatisfied	Very Dissatisfied
Accurate	☐	☐	☐	☐	☐
Complete	☐	☐	☐	☐	☐
Easy to find	☐	☐	☐	☐	☐
Easy to understand	☐	☐	☐	☐	☐
Well organized	☐	☐	☐	☐	☐
Applicable to your tasks	☐	☐	☐	☐	☐

Please tell us how we can improve this book:

Thank you for your responses. May we contact you? ☐ Yes ☐ No

When you send comments to IBM, you grant IBM a nonexclusive right to use or distribute your comments in any way it believes appropriate without incurring any obligation to you.

Name _____ Address _____

Company or Organization _____

Phone No. _____

Readers' Comments — We'd Like to Hear from You
SA22-7526-03

Cut or Fold
Along Line

Fold and Tape **Please do not staple** Fold and Tape

NO POSTAGE
NECESSARY
IF MAILED IN THE
UNITED STATES

BUSINESS REPLY MAIL

FIRST-CLASS MAIL PERMIT NO. 40 ARMONK, NEW YORK

POSTAGE WILL BE PAID BY ADDRESSEE

IBM Corporation
Department 55JA, Mail Station P384
2455 South Road
Poughkeepsie, NY
12601-5400

Fold and Tape **Please do not staple** Fold and Tape

SA22-7526-03

Cut or Fold
Along Line

Program Number: 5694-A01, 5655-G52

Printed in U.S.A.

SA22-7526-03